AP&L

Arkansas Power & Light Company
Arkansas Nuclear One
Route 3, Box 137 G
Russellville, AR 72801
Tel 501 964 3100

April 2, 1990

1CAN049002

U. S. Nuclear Regulatory Commission
Document Control Desk
Mail Station P1-137
Washington, D.C. 20555

SUBJECT: Arkansas Nuclear One - Unit 1
Docket No. 50-313
License No. DPR-51
Licensee Event Report No. 50-313/89-007-01

Gentlemen:

In accordance with 10CFR50.73(a)(2)(ii)(B), attached is a supplemental report involving an inadequate design change process that resulted in a failure to identify a High Pressure Injection System line break scenario which could cause the system to be incapable of immediately supplying adequate core cooling.

This report is being submitted to provide updated information regarding corrective actions which are to be taken with respect to the condition discussed in the report.

Very truly yours,

E. C. Ewing
General Manager,
Technical Support
and Assessment

ECE:RHS:sgw
attachment

cc: Regional Administrator
Region IV
U. S. Nuclear Regulatory Commission
611 Ryan Plaza Drive, Suite 1000
Arlington, TX 76011

INPO Records Center
1500 Circle 75 Parkway
Atlanta, GA 30339-3064

IE22

Form 1062.01A

NRC Form 366
(9-83)

U.S. Nuclear Regulatory Commission
Approved OMB No. 3150-0104
Expires: 8/31/85

LICENSEE EVENT REPORT (LER)

FACILITY NAME (1) Arkansas Nuclear One, Unit One | DOCKET NUMBER (2) 0 5 0 0 0 3 1 3 | PAGE (3) 1 OF 0 4

TITLE (4) Inadequate Design Change Process Results in Failure to Identify a High Pressure Injection System Line Break Scenario Which Could Cause the System to be Incapable of Supplying Adequate Core Cooling

EVENT DATE (5)			LER NUMBER (6)			REPORT DATE (7)			OTHER FACILITIES INVOLVED (8)	
Month	Day	Year	Year	Sequential Number	Revision Number	Month	Day	Year	Facility Names	Docket Number(s)
0 3	1 8	8 9	8 9	0 0 7	0 1	0 4	0 2	9 0		0 5 0 0 0
										0 5 0 0 0

OPERATING MODE (9): N

POWER LEVEL (10): 0 0 0

THIS REPORT IS SUBMITTED PURSUANT TO THE REQUIREMENTS OF 10 CFR §: (Check one or more of the following) (11)

__ 20.402(b)	__ 20.405(c)	__ 50.73(a)(2)(iv)	__ 73.71(b)
__ 20.405(a)(1)(i)	__ 50.36(c)(1)	__ 50.73(a)(2)(v)	__ 73.71(c)
__ 20.405(a)(1)(ii)	__ 50.36(c)(2)	__ 50.73(a)(2)(vii)	__ Other (Specify in Abstract below and in Text, NRC Form 366A)
__ 20.405(a)(1)(iii)	__ 50.73(a)(2)(i)	__ 50.73(a)(2)(viii)(A)	
__ 20.405(a)(1)(iv)	X 50.73(a)(2)(ii)	__ 50.73(a)(2)(viii)(B)	
__ 20.405(a)(1)(v)	__ 50.73(a)(2)(iii)	__ 50.73(a)(2)(x)	

LICENSEE CONTACT FOR THIS LER (12)

Name	Telephone Number (Area Code)
Larry Taylor, Nuclear Safety and Licensing Specialist	5 0 1 9 6 4 - 3 1 0 0

COMPLETE ONE LINE FOR EACH COMPONENT FAILURE DESCRIBED IN THIS REPORT (13)

Cause	System	Component	Manufacturer	Reportable to NPRDS	Cause	System	Component	Manufacturer	Reportable to NPRDS

SUPPLEMENT REPORT EXPECTED (14)

__ Yes (If yes, complete Expected Submission Date) X No

EXPECTED SUBMISSION DATE (15): Month | Day | Year

ABSTRACT (Limit to 1400 spaces, i.e., approximately fifteen single-space typewritten lines) (16)

On 3/18/89, it was determined that a postulated break in a High Pressure Injection (HPI) line upstream of the HPI/Reactor Coolant System (RCS) cold leg connection and downstream of the first RCS/HPI boundary check valve could constitute a Loss of Coolant Accident not enveloped by the plant's design basis. If this break occurred during high power operation concurrent with a HPI pump failure (i.e., the loss of offsite power and a diesel generator failure), the HPI system might not provide adequate core cooling. Based on a preliminary analysis, a temporary License Amendment authorizing operation up to 50 percent of rated power was issued. A License Amendment authorizing operation up to 80 percent of rated power was subsequently issued based on a more detailed plant specific analysis. A design change was implemented during outage 1M89 which installed break flow limiting cavitating venturies. However, excessive vibration during testing necessitated their removal. A permanent resolution is presently being determined and will be implemented during outage 1R9. The cause of this condition was an inadequate design change process, when a major system modification in 1979 installed HPI line cross-connects, which did not ensure that adequate design basis reviews were performed. The current design change process is considered adequate to prevent reccurrence of similar conditions.

A. Plant Status

At the time of discovery of this condition on March 28, 1989, Arkansas Nuclear One, Unit 1 (ANO-1) was in Cold Shutdown.

B. Event Description

As a result of a January 1989 transient, reported in LER 50-313/89-002-00, a review of the plant's Emergency Core Cooling System (ECCS) analysis was conducted which included a reevaluation of the qualification and functional capability of the High Pressure Injection (HPI) System [BJ]. During this review it was discovered that a postulated break of a HPI line could result in a small break Loss of Coolant Accident (LOCA) which was not enveloped by the plant's existing design basis. The hypothetical break location is upstream of the HPI/Reactor Coolant System (RCS) [AB] cold leg connection and downstream of the first RCS/HPI system boundary check valve. (See Figure 1 for the general system layout).

The HPI system is part of both the Makeup and Purification System and the ECCS. In the ECCS mode of operation, two redundant pumps take suction from the Borated Water Storage Tank and supply this coolant to the RCS through each of four cross-connected injection lines, which connect to the four RCS cold legs at the discharge of the Reactor Coolant Pumps (RCPs). The HPI system is designed to prevent uncovering of the core for small and certain intermediate size break LOCAs, where high RCS pressure is maintained, and delays uncovering of the core for other intermediate and large size break LOCAs.

During performance of the ECCS review, it was determined that a potential break of any one of the HPI lines upstream of the RCS cold leg connection and downstream of the first RCS/HPI system boundary check valve was not enveloped by prior analysis and could, assuming a worst case single failure (i.e., an emergency diesel generator failure rendering a HPI pump inoperable), result in significant HPI flow exiting the break with little flow reaching the core. This would occur because back pressure on the broken line would essentially be Containment Building pressure while back pressure on the other lines would be RCS pressure. This condition would continue until a Control Room Operator took action to throttle the excessive HPI flows as stipulated in the existing Emergency Operating Procedure (EOP). After flow balancing was achieved (analyzed to occur ten minutes following a break due to the action of the Operator), approximately 50 percent of the flow from the one running HPI pump would reach the core with the remaining flow exiting the break.

An investigation of the impact of this postulated break on current ECCS evaluations determined that the break did not appear to be enveloped by previously postulated breaks. For breaks which had been considered in the ECCS analysis, approximately 50 percent of HPI flow was assumed to initially reach the core and approximately 70 percent of HPI flow was assumed to reach the core following Control Room Operator action to throttle excessive HPI flow (analyzed to occur ten minutes following a break due to the action of the Operator). Based on the differences in the HPI flows for the postulated break versus the analyzed breaks, it was determined that the HPI system might not be capable of supplying adequate core cooling should the break occur during high power operation.

C. Safety Significance

This condition is considered to be potentially safety significant in that the analysis employed to demonstrate acceptable HPI system response capability did not bound this postulated break location. However, plant safety was not considered to be significantly compromised due to the low probability of occurrence of the specific (both in size and location) postulated break in conjunction with a loss of offsite power and the concurrent failure of a diesel generator. Additionally, communication with the Nuclear Steam Supply System vendor, Babcock and Wilcox, indicates that a detailed quantitative analysis using best-estimate assumptions consistent with the revised ECCS Rule would demonstrate acceptable peak fuel cladding temperatures for this event.

D. Root Cause

In 1979 the HPI system was modified to add crossover lines between the 'B' and 'C' HPI lines and the 'A' and 'D' HPI lines. This modification was made after the identification of an RCS break location (i.e., in the RCP discharge piping) which was considered to be the most limiting for a small break LOCA. The design review of this modification, however, apparently overlooked the potential effects of installation of the cross-connects with respect to a postulated break location as described in this report. The cause of this event was determined to be the inadequate design change process that was in place during this modification. Procedural requirements were not sufficient to ensure that an adequate and in-depth design basis review was performed.

E. Basis For Reportability

The requirements of 10CRF50.46 state that the ECCS cooling performance shall be evaluated in accordance with an acceptable evaluation model using a number of postulated LOCAs sufficient to provide assurance that the entire spectrum of possible LOCAs is covered. Since this identified break was not enveloped by previously postulated breaks and could result in the HPI system being incapable of supplying adequate core cooling, this condition is reportable pursuant to the requirements of 10CFR50.73(a)(2)(ii)(B) as a condition outside the design basis of the plant. This condition was reported in accordance with 10CFR50.72(b)(2)(i) via the Emergency Notification system on March 18, 1989.

F. Corrective Actions

An initial bounding analysis assessing operation at a reduced power level was conducted which conservatively demonstrated that the HPI system could provide adequate core cooling should the postulated break occur at or below 74 percent power. Accordingly, a temporary License Amendment request was submitted to reduce the authorized steady state reactor power limit to 74 percent power. The License Amendment was approved for a 50 percent power maximum level.

A more detailed, plant specific analysis was subsequently performed which demonstrated adequate core cooling can be provided by the HPI system for operation at power levels up to 80 percent power. A License Amendment request based upon the results of this analysis was submitted and approved authorizing operation up to a steady state power limit of 80 percent power.

A design change was implemented during outage 1M89 (December, 1989) which installed break flow limiting cavitating venturis in each of the four HPI lines upstream of the two check valves which isolate this piping from the RCS. However, during post-modification testing of the venturis, excessive vibration was experienced in the piping downstream of the venturis which necessitated their removal. The venturis were replaced with welded spool pieces which restored the system to its original configuration with the exception of a minor piping reroute on the 'D' HPI line.

Evaluations are presently in progress which are considering two possible permanent corrective actions which will allow resumption of full power operation. The first consideration involves reinstalling the cavitating venturis with a modified piping support configuration. The second consideration involves the installation of motor operated valves in each of the HPI lines as well as additional flow instrumentation which would allow the operators to more readily identify and compensate for a pipe break in the location discussed in this report. After determination of the permanent corrective action, a Design Change will be developed and implemented during refueling outage 1R9, which is scheduled to begin in October, 1990.

The design change process has been improved several times since the modification to the HPI system was completed in 1979. In 1987, a comprehensive program was implemented aimed at improving the quality, depth, and documentation of reviews conducted under 10CFR50.59 for plant design changes and procedure changes. The design change procedures in place at the present time require detailed documented reviews of design basis documents for each design change and are considered adequate to prevent the recurrence of similar events.

G. Additional Information

A similar design error due to an inadequate design change process (and also associated with the modification of the HPI system in 1979 as detailed in this LER) resulted in the design temperature of the HPI system piping being exceeded due to RCS backleakage through a failed-open check valve. This is reported in LER-50-313/89-004-00.

Energy Industry Identification System (EIIS) codes are identified in the text as [XX].

Figure 1

High Pressure Injection System Line Break

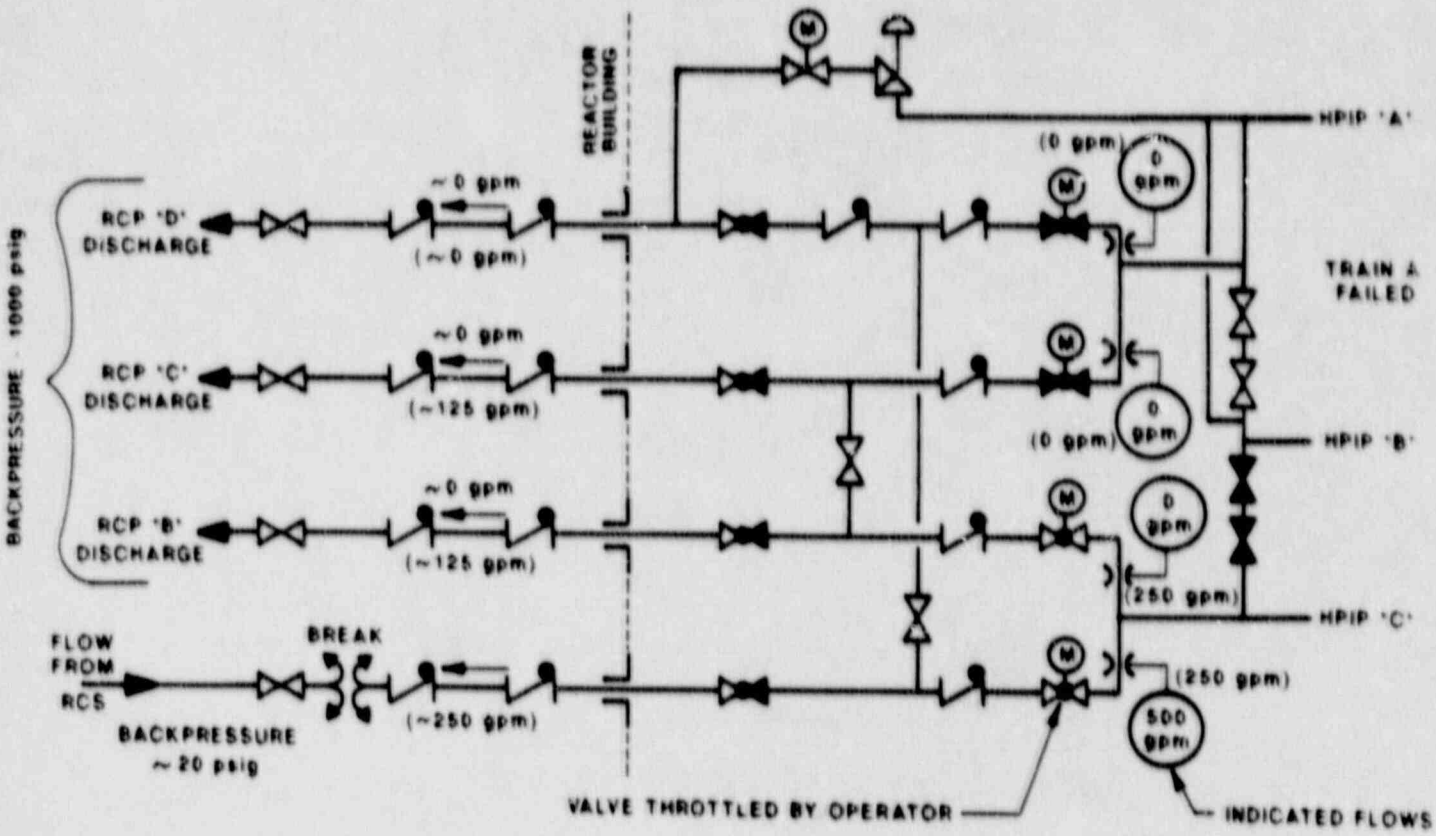

1. Scenario assumes a loss of off-site power and the failure of one Emergency Diesel Generator.
2. Numbers in parentheses represent estimated flows after operator actions.
3. Flow and pressure values are estimated.
4. RCP - Reactor Coolant Pump
5. HPIP - High Pressure Injection Pump