VERMONT YANKEE
NUCLEAR POWER CORPORATION

Ferry Road, Brattleboro, VT 05301-7002

BVY 90-037

REPLY TO
ENGINEERING OFFICE
580 MAIN STREET
BOLTON, MA 01740
(508) 779-6711

March 26, 1990

U.S. Nuclear Regulatory Commission
Washington, D.C. 20555

Attention: Document Control Desk

References:
a) License No. DPR-28 (Docket No. 50-271)
b) Letter, VYNPC to USNRC, BVY 89-83, dated 9/1/89
c) Letter, USNRC to VYNPC, Generic Letter 89-16, dated 9/1/89
d) Letter, VYNPC to USNRC, BVY 89-99, dated 10/30/89
e) Letter, USNRC to VYNPC, NVY 90-007, dated 1/19/90

Dear Sir:

Subject: Update of Containment Overpressure Protection Capability

As suggested by Reference e), we wish to confirm our plans to install passive containment overpressure protection (COP) capability. Vermont Yankee intends to design the new COP under the rules of 10CFR50.59 and install the system during the 1992 refueling outage. Operators will be trained in the design basis and use prior to startup from that outage. A description of the intended system design and operating philosophy is included, for your information, in the attachment.

Vermont Yankee firmly believes that a passive containment overpressure system which is designed to relieve at a pressure below the containment failure pressure is extremely desirable when compared to an active system from several standpoints. First, under any postulated scenario, potential radioactivity will be retained inside the primary containment for the maximum time available prior to jeopardizing containment integrity. Second, reliance on a major and potentially far reaching decision on when to relieve containment pressure (for an active system) would place an unnecessary burden on the decision makers during a time of crisis.

Vermont Yankee strongly believes that this level of decision should be a pre-evaluated strategy, endorsed by company management, whenever feasible. Further, all other applicable response organizations will be knowledgeable of this predetermined potential containment pressure relief mechanism. While we agree that any need for containment overpressure protection capability is extremely remote, Vermont Yankee continues to support this plant modification that may provide an overall improvement to plant safety.

A001
1/1

If you have any questions or concerns, please do not hesitate to contact us.

Very truly yours,

VERMONT YANKEE NUCLEAR POWER CORPORATION

Warren P. Murphy
Vice President and
Manager of Operations

/dm
cc: USNRC Regional Administrator, Region I
USNRC Resident Inspector, VYNPS
USNRC Project Manager, VYNPS

CONTAINMENT OVERPRESSURE PROTECTION (COP) AT VERMONT YANKEE NUCLEAR POWER STATION

Objective of COP

The objective of COP is to protect the containment under beyond design basis circumstances in which the structural integrity of the containment is threatened due to overpressure. Containment venting is one strategy that may be utilized to prevent core damage. The COP provides a flow path from the suppression pool air space (which would maximize fission product scrubbing) to the main stack for an elevated release. This will provide a dedicated path for containment overpressure protection in coping with a prolonged loss of decay heat removal systems event. This scenario (called the TW sequence) is a hypothetical, very low probability, beyond design basis event assuming the occurrence of multiple failures. The COP provides a containment venting capability for decay heat removal which reduces potential on-site and off-site impacts relative to the existing containment venting capability. Venting the primary containment via the COP system is not expected to occur over the lifetime of the plant.

Description of the COP

The passive COP (Figure 1) is a direct flow path from the suppression pool air space to the main stack bypassing the Standby Gas Treatment (SBGT) system. The new COP line will be a 6" line between the Torus and the 12" SBGT outlet line leading to the main stack. The COP capacity will be sufficient to cope with the TW sequence at Vermont Yankee (1% full power or less).

Within the new 6" COP line there is, as a minimum, a rupture disc and remotely operated normally open gate valve. The rupture disc serves as the primary containment outboard isolation device for the COP line and will conform to NRC requirements for sealed closed isolation devices as defined in NUREG 0800, SRP 6.2.4. The new pipe will be designed, fabricated and installed to requirements of ASME XI.

NUREG 0800, SRP 6.2.4, Item II.6.F allows the use of sealed closed barriers in place of automatic isolation valves. Sealed closed barriers include blind flanges and sealed closed isolation valves which may be closed remote manual valves. The rupture disc is similar to a blind flange since it provides a leak tight seal for the pressures for which it was designed.

The nominal predetermined setpoint at which the COP rupture disc relieves the pressure in the primary containment will be the maximum code allowable internal pressure of 62 psig. Consideration will also be given to the maximum pressure capability of other isolation valves and their failure modes. This will ensure that the vent is not opened for an accident less severe than the design basis accident but will open before the integrity of the primary containment is ultimately challenged. This will minimize the situations that would require discharging the radioactive gases inside the primary containment to the environment.

Operational Philosophy

The operational strategy of the COP is to allow venting of the primary containment, if required, only during severe accident events like the TW sequence. This is accomplished by using a passive philosophy for the COP. Utilizing a rupture disc as the primary relief device provides for a completely passive vent. Excessive containment pressure alone will automatically activate the vent with no operator action required. This design also provides assurance that the vent will not be used inadvertently during some other event, and also provides the operators the maximum amount of time to recover any containment cooling systems which would avert unnecessary venting. Having the burst pressure of the rupture disc above the worst design basis accident pressure ensures that the pathway will only be opened for a severe accident event.

The new remote operated normally open gate valve (Figure 1) may be closed by operators in the control room to stop a release after the rupture disc has opened and the pressure in the containment is controllable and returned to acceptable levels. Indication of valve position is provided in the control room. The ability to prevent a release is also available by closing the gate valve should the circumstances indicate.

A passively designed COP system is extremely desirable, from an operator perspective, since for any postulated severe accident scenario the maximum code allowable containment pressure will not be needed. This setpoint will be established in the design effort and therefore will not need specific consideration in the midst of an event.

Affects on Current Plant Design Basis

The new COP interfaces with the Primary Containment and the SBGT outlet piping. Therefore, the only plant design bases potentially affected would be Primary Containment Integrity and Standby Gas Treatment.

o Primary Containment Integrity

Per Secton 5.2 of the FSAR, the Safety Design Basis of the Primary Containment System is to maintain leak tight structural integrity during and after a postulated design basis LOCA.

The new COP line will be equipped with, as a minimum, a specially designed rupture disc to act as a sealed closed barrier under Design Basis Accident conditions. The structural integrity of the rupture disc will be tested periodically under Vermont Yankee's Containment Leak Rate Test Program.

Stringent design, manufacturing, shop testing, and installation controls will be applied to rupture disc to insure all containment isolation design requirements are satisfied.

Therefore, Primary Containment Integrity will not be adversely affected by this change.

o Standby Gas Treatment System (SBGT)

The new COP line connects downstream of the SBGT System into the 12" SBGT line which runs underground to the plant stack. Under Design Basis Accident (DBA) conditions, the COP line will be isolated via the rupture disc and the SBGT System operation will not be impacted by the new vent line. The new COP line will be installed to seismic and quality standards consistent with SBGT and Containment system design requirements. Therefore, the COP line will not degrade operation of either system under DBA conditions.

Under venting conditions, SBGT operation would not be necessary and the SBGT filter trains would be isolated from the vented steam. The ability of the affected portions of the SBGT system to withstand the vented steam temperature and back-pressure conditions will be investigated and any required changes will be made.

Therefore, the Standby Gas Treatment System will not be adversely affected by this change.

/dm

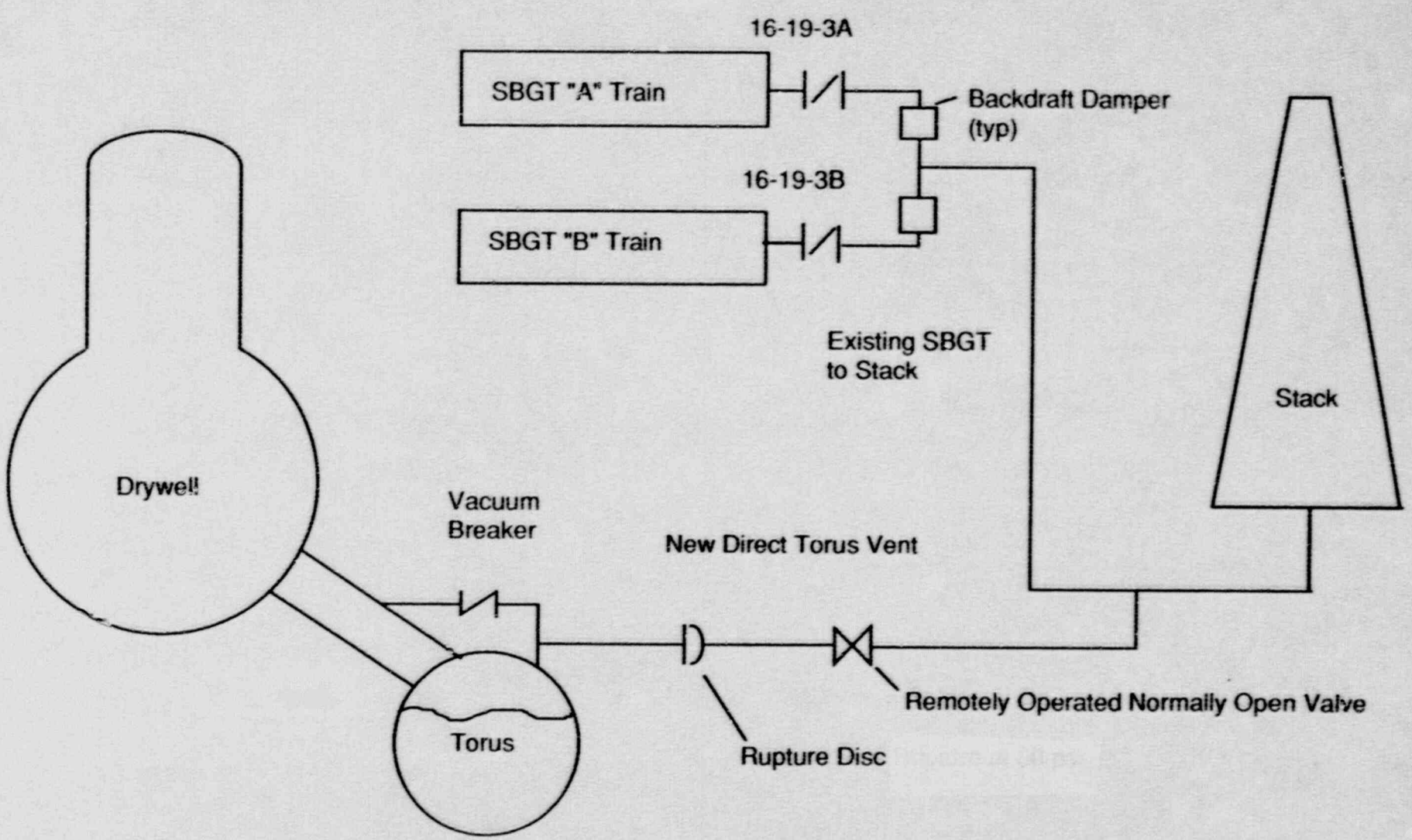
16-19-3A
SBGT "A" Train
Backdraft Damper
(typ)
16-19-3B
SBGT "B" Train
Existing SBGT
to Stack
Stack
Drywell
Vacuum
Breaker
New Direct Torus Vent
Remotely Operated Normally Open Valve
Torus
Rupture Disc

FIGURE 1