Overview of CFRP Pipe Repair Design Approach

Rasko Ojdrovic, Ph.D., P.E.
Senior Principal
Simpson Gumpertz & Heger
16 January 2020

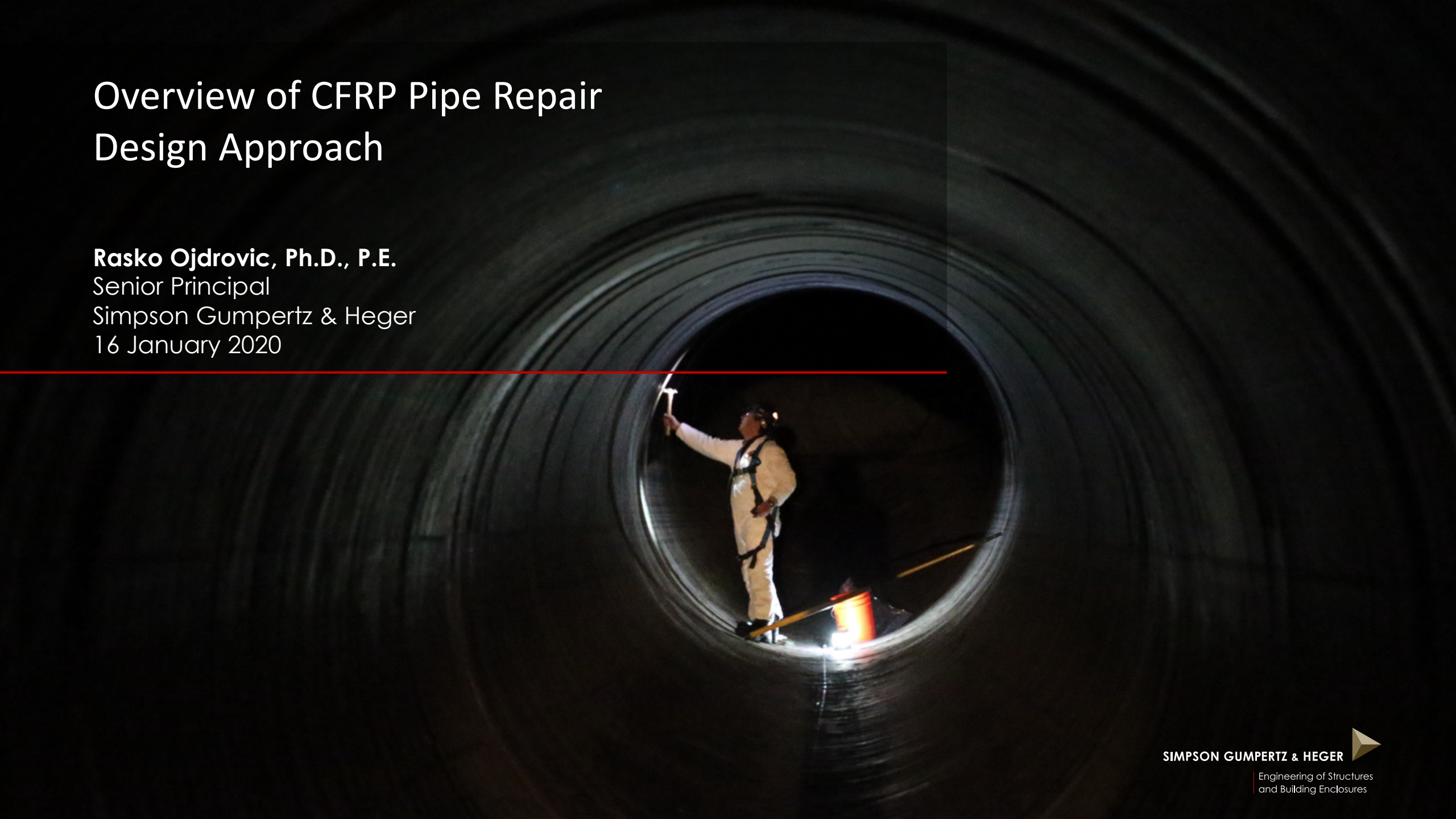

SIMPSON GUMPERTZ & HEGER
Engineering of Structures and Building Enclosures

Design Approach for CFRP Lining

- Provide standalone CFRP system that has the necessary strength, reliability, and durability to carry all design loads even if the host pipe continues to degrade.

- Satisfy all relevant design limit states for all plausible load combinations including
  - internal working and transient pressure,
  - internal vacuum,
  - gravity loads such as earth load, surface live load, pipe weight, water weight,
  - external groundwater pressure,
  - temperature differentials during the design life,
  - seismic load, and
  - any other loads that may act on the CFRP repaired pipe.

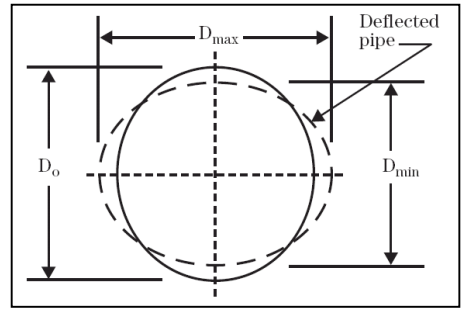

CFRP Layup

- CFRP is a composite system consisting of a unidirectional fabric applied in circumferential and longitudinal layers.
- Layup is designed for strength and stiffness to meet all design limit states. Example layup is:

  1D+1H+1L+1W+1H

  - D = Dielectric layer
  - H = Hoop layer
  - L = Longitudinal layer
  - W = Watertightness layer

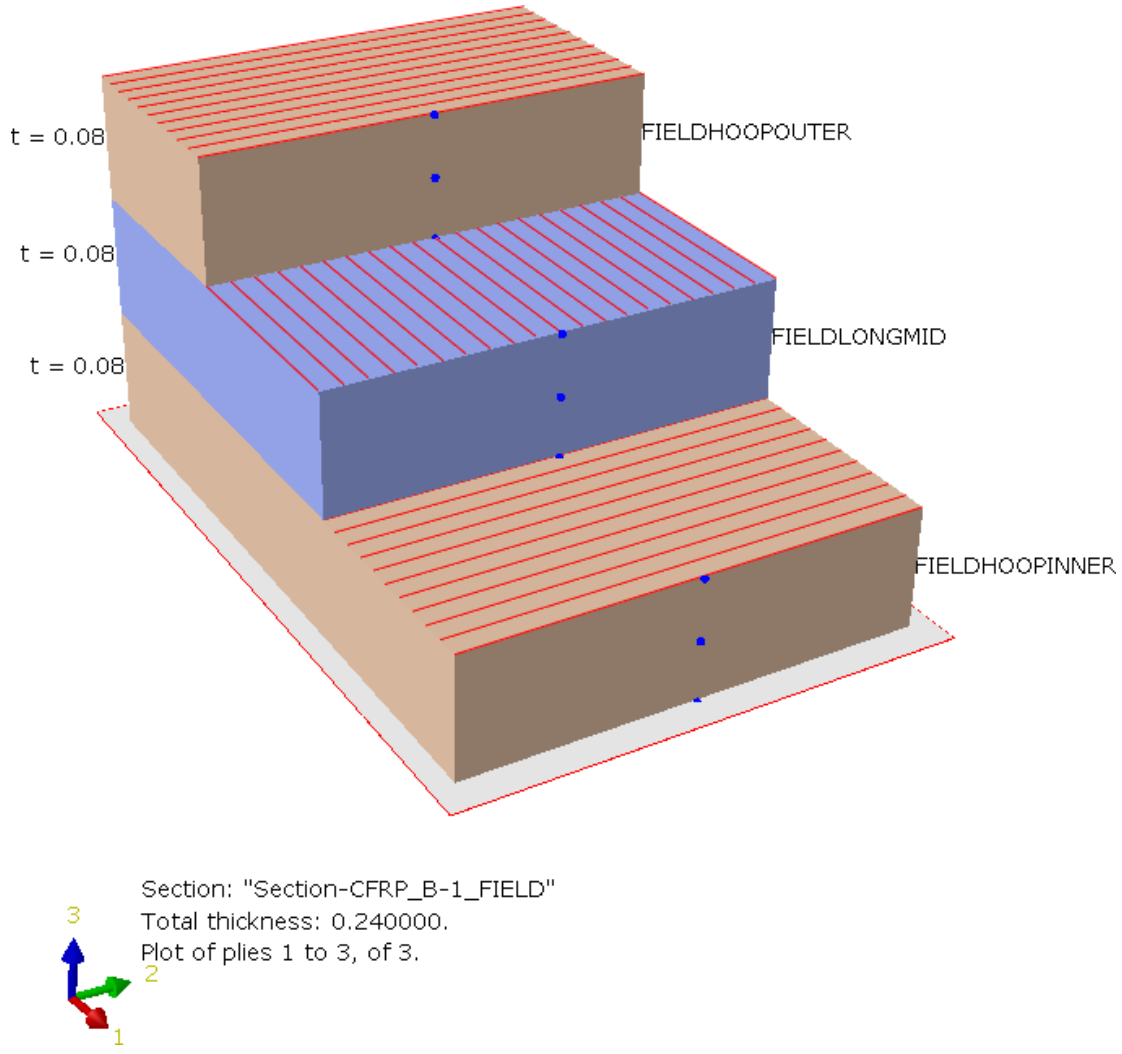

Research and Testing

- Based on Simpson Gumpertz & Heger research including Water Research Foundation projects #4352, 4510 and 4592
- Full-scale tests
  - Hydrostatic pressure
  - Three-edge bearing
- Laboratory tests
  - Tension and shear bond
  - Degree of cure
  - Watertightness
- FEA of CFRP-lined pipe
- Reliability based design procedure

54 in. ECP

48 in. LCP

Watertightness

- Watertightness is addressed through testing and layup design and detailing
- Depending on the layers of CFRP installed, dedicated watertightness layer or coating may be required
  - Specimen with no leaks at 400 psi with watertightness detailing
  - Specimen with multiple weeps at 150 psi without watertightness detailing

CFRP Material

- High strength elastic material
- Higher strength than steel
- Modulus of elasticity is about 1/3 to ½ of steel

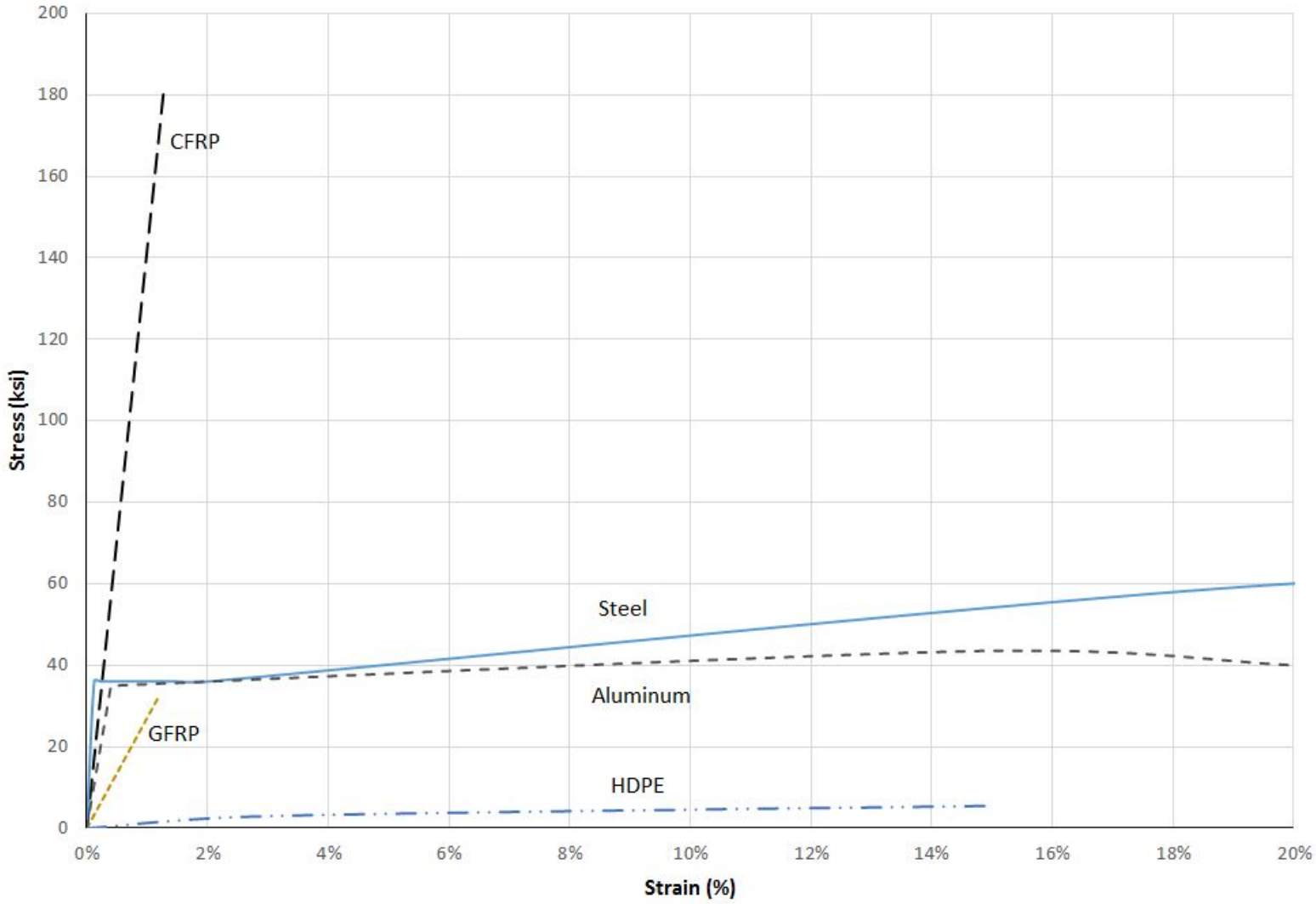

Material Properties

- Material properties based on tension tests of single-ply CFRP cured laminate (min 50 samples, ASTM D3039)
- Characteristic values of strength and modulus is the lower 5 percentile value with 80% confidence (ASTM D7290)
- Strength depends on the number of layers

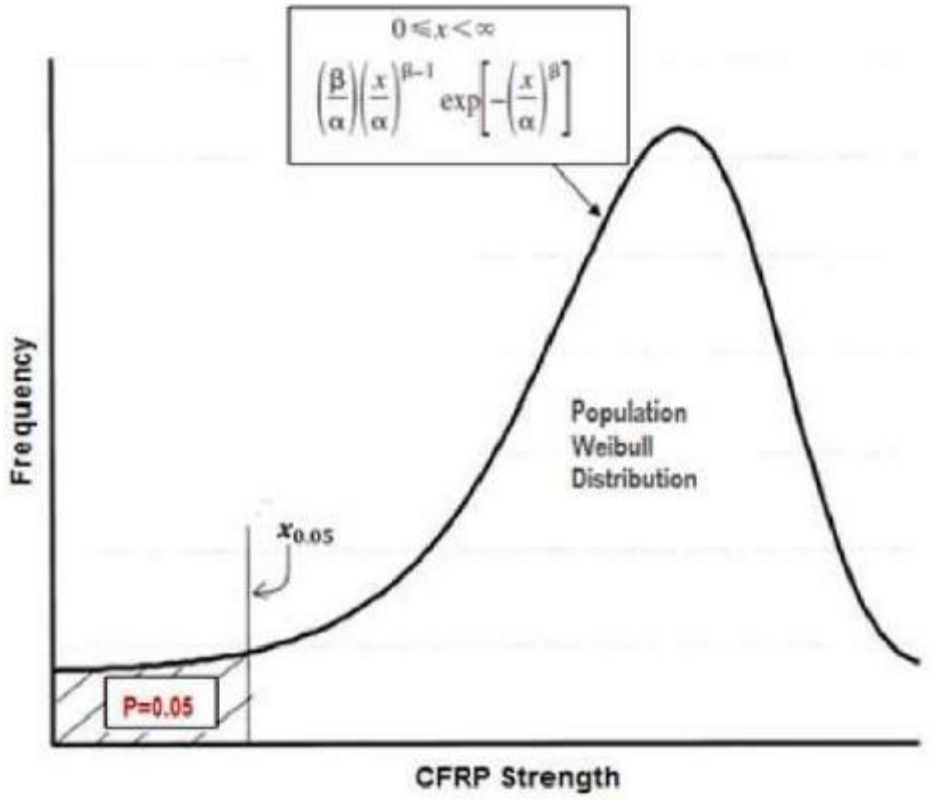

Durability

- Material adjustment factors established for each CFRP system through long-term exposure, testing for the retained strength, and extrapolating the test results out to the design life for the system (50-year service life).
- Time effect factor accounts for the creep rupture strength of CFRP.
- Consider strength in the end use condition

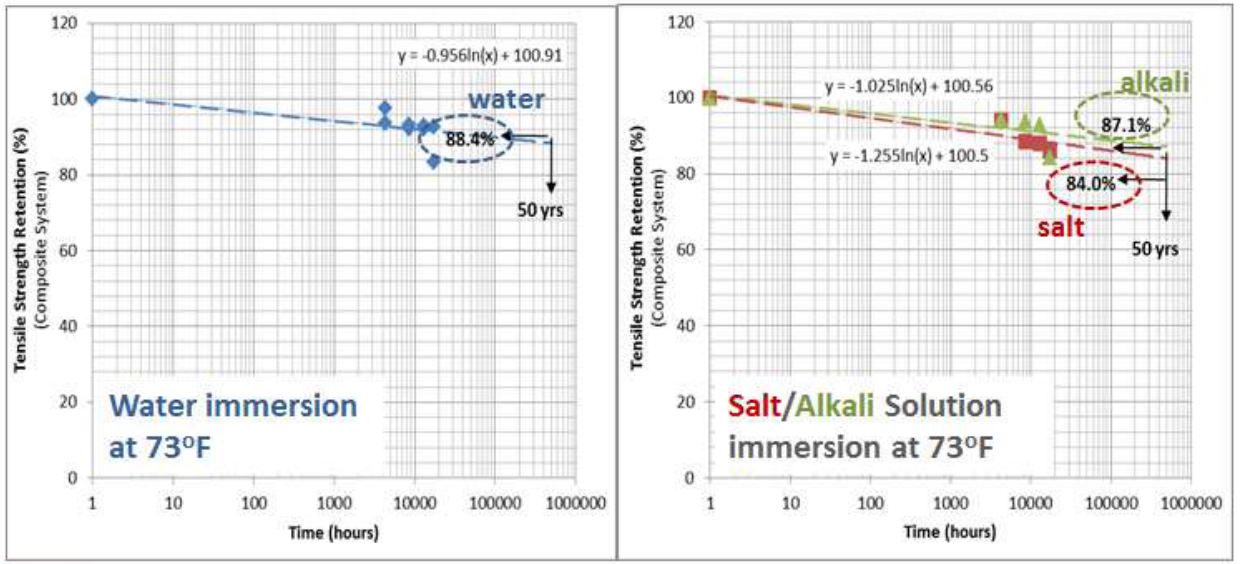

CFRP Design Limit States

- Circumferential Direction:
  - Rupture due to pressure
  - Deformation due to bending from external loads
  - Rupture due to combined pressure and bending from external loads
  - Buckling due to vacuum and external load and groundwater
- Repair Terminations
  - Steel pipe carries loads
  - Shear bond length for load transfer

- Longitudinal Direction:
  - Rupture due to pressure-induced thrust, Poisson effect of pressure, and temperature decrease
  - Shear bond failure at the repair terminations
  - Buckling due to temperature increase
  - Rupture due to relative radial expansion of CFRP system in corroded zones of the host pipe

Factor of Safety

- Factor of safety is intended to cover all unknown variations in load, material strength, installation, and other uncertainties
- Two principal methods of designing structures, including piping:
  - Deterministic allowable stress design (ASD) method that forms the basis of B31.1, and
  - Probabilistic Load and Resistance Factor Design (LRFD) method of AWWA C305
- Similarity in both approaches: stress from applied loads must be less than material strength by a certain factor of safety
- Difference between the two approaches: method to determine appropriate factor of safety

Factor of Safety

- ASD factor of safety is typically agreed upon based on the history of success with similar structures and/or materials
- For steel pipe in B31.1, factor of safety of 3.5 is used for pressure
- May vary widely for different applications and materials, e.g.:
  - 1.5 - for design of aircraft with CFRP and other composites
  - 10 - for design of cast iron pipe (B31.1)

- LRFD factor of safety is

$$Factor\ of\ Safety = \frac{Load\ Factor}{\text{Resistan}ce\ Factor} = \frac{LF}{\phi}$$

- Based on reliability analysis:
  - Agreed upon maximum acceptable annual failure rate or target reliability
  - Load factors (LF) are based on probability distribution of loads anticipated during the life of the structure
  - Resistance factors (ϕ) are based on probability distributions of material properties including construction, environment, accuracy in analysis, etc.
  - FS is applied on end use condition material properties:
    - Short term properties (R_o)
    - Material adjustment factors for exposure (c)
    - Time effect factor – creep (λ)
  - For sustained internal pressure, minimum FS = 2.15, therefore use 3.5

Terminal Ends

- Host pipe has the required minimum wall thickness
- CFRP repair end needs to provide a watertight seal and force transfer between CFRP and host pipe through bond
- NDT checks host pipe thickness and voids in bonded CFRP
- Acceptable voids are less than 0.5% of total terminal end laminate area, and max size < 1 in.
  - Based on and more stringent than AWWA C305 and ACI 440 criteria
  - 0.5% imperfection is not expected to affect behavior significantly, especially considering relatively low stress in CFRP
  - Watertightness testing of panels with embedded voids and other imperfections showed their performance was not significantly different from control specimens
- Consider using an inner seal (Weko) to provide watertight seal over terminal ends

Sample Design Details

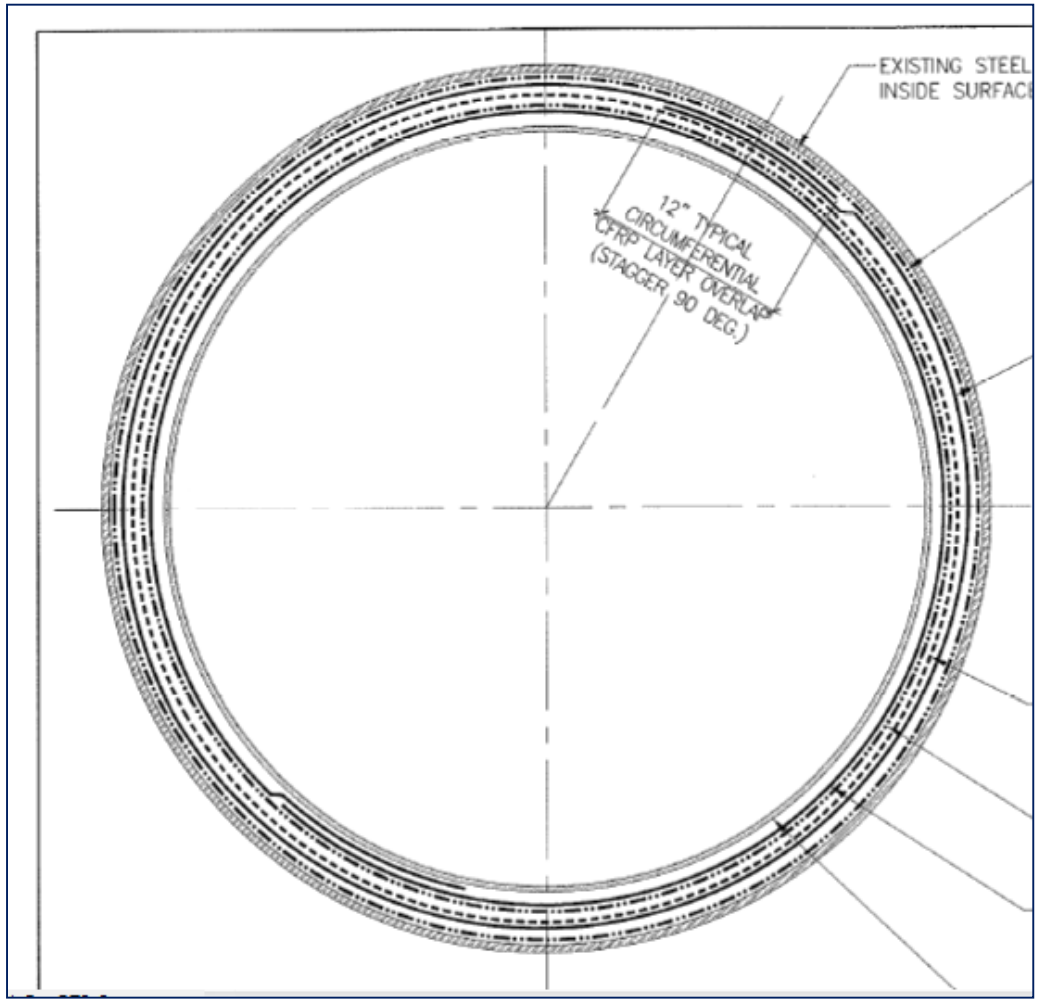

- Schematic cross section of pipe and overlaps

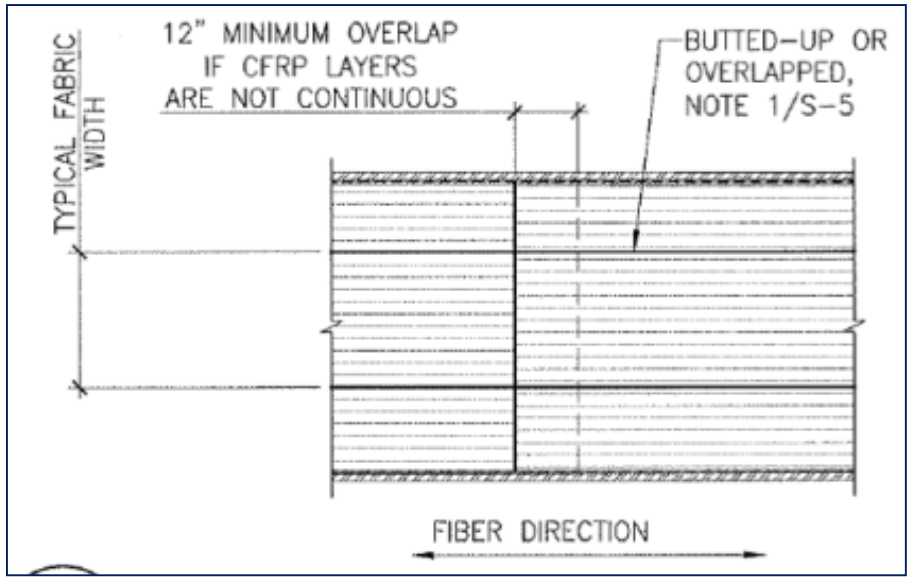

Sample Design Details

- Schematic detail at outlet

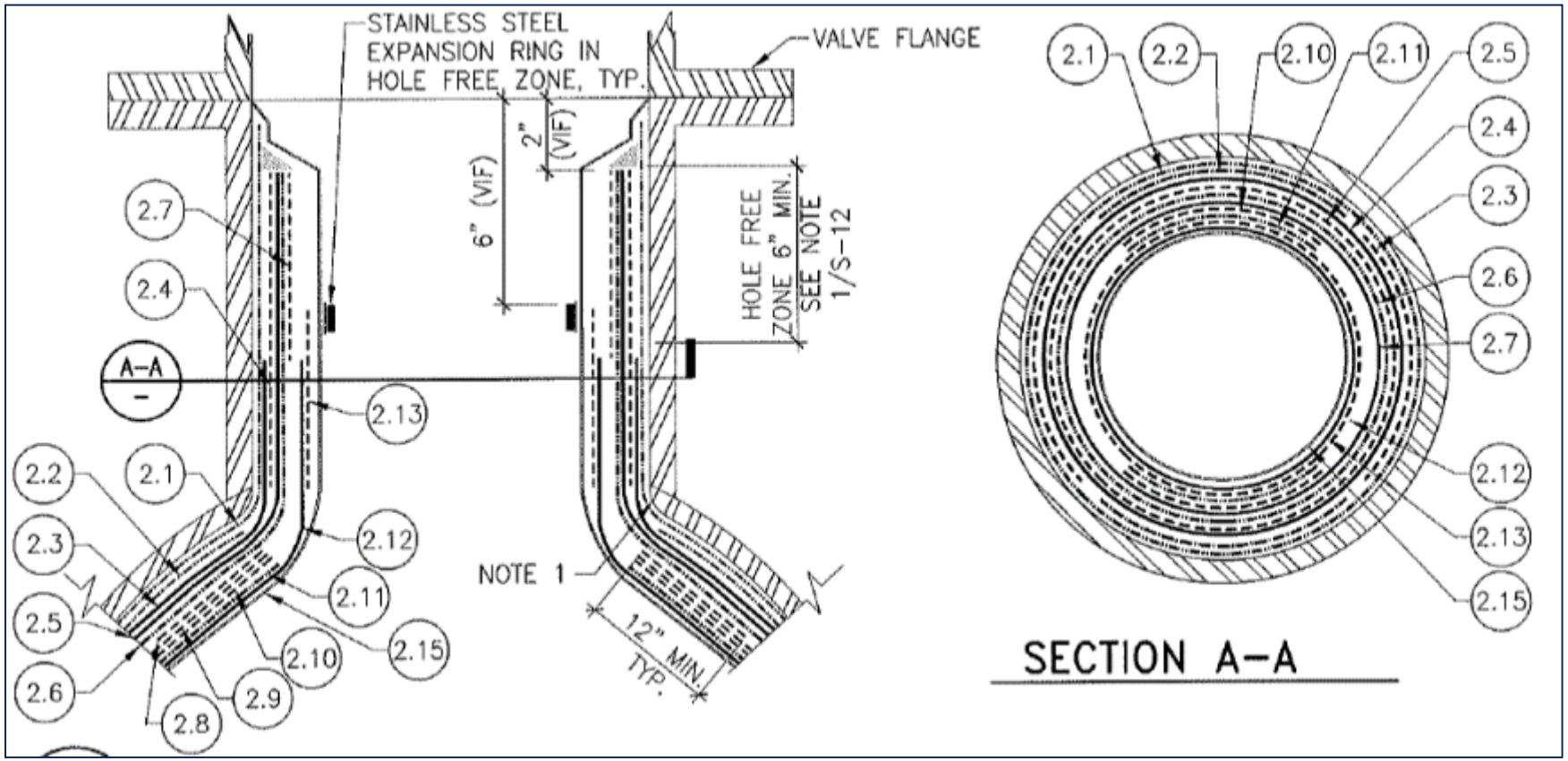

Questions?