PSEG

Public Service Electric and Gas Company P.O. Box 236 Hancocks Bridge, New Jersey 08038

Salem Generating Station

December 15, 1989

U. S. Nuclear Regulatory Commission
Document Control Desk
Washington, DC 20555

Dear Sir:

SALEM GENERATING STATION
LICENSE NO. DPR-75
DOCKET NO. 50-311
UNIT NO. 2
LICENSEE EVENT REPORT 89-022-00

This Licensee Event Report is being submitted pursuant to the requirements of the Code of Federal Regulations 10CFR 50.73(a)(2)(ii)(B). This report is required within thirty (30) days of discovery.

Sincerely yours,

L. K. Miller
General Manager -
Salem Operations

MJP:pc

Distribution

IE22
1/1

NRC Form 366 (9-83)

U.S. NUCLEAR REGULATORY COMMISSION
APPROVED OMB NO. 3150-0104
EXPIRES 8/31/85

LICENSEE EVENT REPORT (LER)

FACILITY NAME (1)	DOCKET NUMBER (2)	PAGE (3)
Salem Generating Statin - Unit 2	0 5 0 0 0 3 1 1	1 OF 1 0

TITLE (4)

Tech. Spec. Action Statement 3.0.3 Entry; SJ49 Valves Do Not Meet Design Basis Req'ts.

EVENT DATE (5)			LER NUMBER (6)			REPORT DATE (7)			OTHER FACILITIES INVOLVED (8)	
MONTH	DAY	YEAR	YEAR	SEQUENTIAL NUMBER	REVISION NUMBER	MONTH	DAY	YEAR	FACILITY NAMES	DOCKET NUMBER(S)
1 1	1 7	8 9	8 9	— 0 2 2	— 0 0	1 2	1 5	8 9	Salem - Unit 1	0 5 0 0 0 2 7 2
										0 5 0 0 0

OPERATING MODE (9): 1

POWER LEVEL (10): 0 9 0

THIS REPORT IS SUBMITTED PURSUANT TO THE REQUIREMENTS OF 10 CFR §: (Check one or more of the following) (11)

20.402(b)	20.405(c)	50.73(a)(2)(iv)	73.71(b)
20.405(a)(1)(i)	50.36(c)(1)	50.73(a)(2)(v)	73.71(c)
20.405(a)(1)(ii)	50.36(c)(2)	50.73(a)(2)(vii)	OTHER (Specify in Abstract below and in Text, NRC Form 366A)
20.405(a)(1)(iii)	50.73(a)(2)(i)	50.73(a)(2)(viii)(A)	
20.405(a)(1)(iv)	50.73(a)(2)(ii)	50.73(a)(2)(viii)(B)	
20.405(a)(1)(v)	50.73(a)(2)(iii)	50.73(a)(2)(x)	

LICENSEE CONTACT FOR THIS LER (12)

NAME	TELEPHONE NUMBER (AREA CODE)
M. J. Pollack - LER Coordinator	6 0 9 3 3 9 - 4 0 2 2

COMPLETE ONE LINE FOR EACH COMPONENT FAILURE DESCRIBED IN THIS REPORT (13)

CAUSE	SYSTEM	COMPONENT	MANUFACTURER	REPORTABLE TO NPRDS	CAUSE	SYSTEM	COMPONENT	MANUFACTURER	REPORTABLE TO NPRDS

SUPPLEMENTAL REPORT EXPECTED (14)

YES (If yes, complete EXPECTED SUBMISSION DATE) — NO: X

EXPECTED SUBMISSION DATE (15): MONTH | DAY | YEAR

ABSTRACT (Limit to 1400 spaces, i.e., approximately fifteen single-space typewritten lines) (16)

During an engineering review of the component classification for the 230 VAC breakers, it was determined that the control power lockout circuit for both Salem Units' SJ49 valves (RHR Pump Cold Leg Discharge Valves) do not meet single failure criteria. A short circuit in the control circuit could potentially cause a valve to inadvertently energize and close. The SJ49 valves are not redundant during the Injection Phase of ECCS. The root cause has been attributed to inadequate review of design base documentation. The review did not identify the SJ49 control power circuit lockout design requirement for mitigating single failure criterion. Apparently, the uniqueness of this circuit's characteristic for mitigating single failure concerns was not completely understood by the engineer who worked on the design change or the design change reviewers. The breakers for the U-1 and U-2 SJ49 valves have been cleared and tagged open. Emergency operating procedures and primary plant logsheets have been revised. A briefing was conducted with all shift personnel, prior to their assuming the watch. An engineering evaluation to study the significance of the single failure of the SJ49 valve control circuit has been issued. SJ49 circuitry design modifications will be made. The 1987 design change procedure and current design change procedure have been reviewed. The procedure for performing 10CFR 50.59 evaluations was reviewed. An ongoing training program, initiated circa 1988, to enhance the administrative capabilities of PSE&G engineers and support personnel in the preparation and approval of design changes and 10CFR 50.59 safety evaluations is continuing.

NRC Form 366 (9-83)

PLANT AND SYSTEM IDENTIFICATION:

Westinghouse - Pressurized Water Reactor

Energy Industry Identification System (EIIS) codes are identified in the text as {xx}

IDENTIFICATION OF OCCURRENCE:

Technical Specification Action Statement 3.0.3 entered; 21(22)SJ49 valves do not meet design basis requirements

Reportability Date: 11/17/89

Report Date: 12/16/89

This report was initiated by Incident Report No. 89-726.

CONDITIONS PRIOR TO OCCURRENCE:

Unit 1: Mode 1 Reactor Power 90% - Unit Load 1040 MWe
Unit 2: Mode 1 Reactor Power 90% - Unit Load 1020 MWe

DESCRIPTION OF OCCURRENCE:

During a review, by PSE&G Engineering, of the component classification for the 230 VAC breaker, it was determined that the control power lockout circuit for the Salem Unit 1 and Unit 2 SJ49 valves (RHR Pump Cold Leg Discharge Valves) do not meet the single failure criteria as specified by Branch Technical Position EICSB 18. A short circuit in the control circuit could potentially cause a valve to inadvertently energize and close. The SJ49 valves are not redundant during the Injection Phase of Emergency Core Cooling (ECC); therefore, failure of the circuit which results in valve closure could prevent mitigation of the consequences of an accident as credited in the plant design basis. Subsequently, on November 17, 1989 at 1550 hours, both ECCS subsystems {JE} were declared inoperable and Technical Specification Action Statement 3.0.3 was entered for both Units.

Technical Specification Action Statement 3.0.3 is identical for both Salem 1 and Salem 2. It states:

> "When a Limiting Condition for Operation is not met except as provided in the associated ACTION requirements, within one hour action shall be initiated to place the unit in a MODE in which the specification does not apply by placing it, as applicable, in:
>
> 1. At least HOT STANDBY within the next 6 hours,
> 2. At least HOT SHUTDOWN within the following 6 hours, and
> 3. At least COLD SHUTDOWN within the subsequent 24 hours.
>
> Where corrective measures are completed that permit operation under the ACTION requirements, the ACTION may be taken in

DESCRIPTION OF OCCURRENCE: (cont'd)

accordance with the specified time limits as measured from the time of failure to meet the Limiting Condition of Operation. Exceptions to these requirements are stated in the individual specifications."

On November 17, 1989 at 1605 hours the Nuclear Regulatory Commission was notified of this event in accordance with Code of Federal Regulations 10CFR 50.72(b)(2)(iii)(D).

APPARENT CAUSE OF OCCURRENCE:

The root cause of this event has been attributed to inadequate review of design base documentation upon implementation of a design change. The review failed to identify the peculiarity of the SJ49 control power circuit lockout design requirement for mitigating single failure criterion. Apparently, the uniqueness of this circuit's characteristic for mitigating single failure concerns was not completely understood by the engineer who worked on the design change (discussed below) or the design change reviewers. Additionally, in 1987, preparation of design change packages did not require detailed documentation of those UFSAR sections reviewed.

Following an incident in August 1986 (i.e., LER 311/86-007-00) which involved a degraded bus voltage, a detailed review of the Salem electrical system design was undertaken. This evaluation identified a number of circuits where a degraded bus voltage condition could prevent required functions from being accomplished. Among these circuits were the control power lockout circuits for the SJ49 valves.

In December 1987 a design change was completed for both Units (reference DCP's 1(2)EC-2295) which alleviated the concern that a large voltage drop, caused by a large in-rush current, could potentially prevent the closing coil from picking up thereby preventing a required SJ49 valve closure. These DCPs added a low power interposing relay (95/C) locally at the Motor Control Center (MCC), thereby eliminating the long cable runs from the control room to the MCC for the motor starter closing coil, 9/C (see attached drawings). This significantly reduced the voltage drop associated with the high power starter closing coil. The new design placed the motor starter closing coil, 9/C, in series with a single contact off the interposing relay. This new configuration no longer provided for a completely isolated closing coil or the monitoring of the power lockout to the closing coil as described in the Updated Final Safety Analysis Report (UFSAR) section 7.3.2.6 and Figure 7.3-3. Therefore, the single failure of the 95/C interposing relay contact would both restore power to the 9/C closing coil and result in an undesirable closure of the valve.

The above design changes were handled as "emergency" DCRs. This classification allowed their expeditious implementation by limiting the amount of administrative control while still complying with the

APPARENT CAUSE OF OCCURRENCE:

requirements of the Technical Specifications and UFSAR for design change implementation. One of the controls not employed was a third party technical review of the proposed design change.

ANALYSIS OF OCCURRENCE:

The SJ49 valves are motor operated valves which control the discharge of the RHR pumps into the Reactor Coolant System (RCS) [AB] cold legs. These valves help mitigate the consequences of a Loss-Of-Coolant Accident (LOCA). There are three (3) distinct phases in the mitigation of a LOCA: Cold Leg Injection; Cold Leg Recirculation; and Hot Leg Recirculation. During the Injection Phase, low head injection is provided by the two (2) RHR pumps with both SJ49 valves and RH19 valves (RHR Cross-Tie Valves) open.

Once the Injection Phase is completed, as indicated by low Refueling Water Storage Tank (RWST) level, the Cold Leg Recirculation Phase is entered. In the Cold Leg Recirculation Phase, core cooling water is obtained by drawing a suction from the Containment Sump. The two RHR trains are isolated (via closure of the RH19 cross-tie valves). One (1) train of RHR will provide flow to the reactor core (via injection into two (2) RCS cold legs) and the other train will also provide flow to the other two (2) RCS cold legs until the RWST level reaches its low-low level setpoint. At this point, the flow from one (1) of the RHR System flowpaths will be diverted to the Containment Spray System (as required). To divert the RHR flow to the Containment Spray System, the associated SJ49 valve must be closed.

After fourteen (14) hours from initiation of the SI signal, the Hot Leg Recirculation Phase is entered. In entering this phase, flow to the Containment Spray System via RHR is isolated. The two (2) RH19 cross-tie valves are reopened and the open SJ49 valve is closed. RHR flow into the core is now directed into the two (2) RCS hot legs to mitigate boron stratification concerns.

As indicated above, the SJ49 valves are normally open to allow RHR pump injection flow to the RCS cold legs following a postulated LOCA. During the Injection Phase, the valves are not considered to be redundant to each other since the accident analysis assumes flow to three legs of the RCS and either valve will control flow to only two (2) legs. During the transfer to the Cold Leg Recirculation Phase, one of the SJ49 valves is closed. Therefore, during this phase, the valves are considered to be redundant.

To assure the SJ49 valves meet the requirements of the single failure criterion, a control power lockout was provided in the initial system design. Installation of the power lockout was mandated by the NRC during the licensing of the unit. It was determined that a single active failure or operator misaction could result in inadvertent closure of the valve, thereby placing the unit in a condition outside its design basis.

ANALYSIS OF OCCURRENCE: (cont'd)

The control power lockout design included a power lockout switch which isolated the closing coil of the motor starter. This design would then require two (2) distinct operator actions to close the valve; removal of the power lockout and pushing the CLOSE pushbutton. The design also precluded a single active failure from causing the valve to inadvertently close. The switch is monitored in the Control Room on panel RP4 by separate lights which would indicate a failure of the lockout circuit to provide the required isolation and also provide indication that the valve control circuit has been made operable by removal of the lockout. The control power lockout circuit is described in the Updated Final Safety Analysis Report (UFSAR) section 7.3.2.6 and Figure 7.3-3.

This installation was judged by the NRC to be acceptable as it met the NRC staff review criteria of Branch Technical Position EICSB-18, Application of the Single Failure Criterion to Manually-Controlled Electrically-Operated Valves. However, as discussed in the Apparent Cause of Occurrence section, December 1987 design modifications to the SJ49 circuitry created a condition in which a single failure of the new interposing relay contact could restore power to the SJ49 circuit closing coil resulting in undesirable closure of the valve.

While the failure probability of such a relay failure is low and the relay is not required to function during the Injection Phase following a LOCA, it is necessary to assume a failure both in the sense of "failure to function" and the "undesirable function" sense to meet the BTP NRC review criteria. Also, the NRC Staff has stated in Question 3.7 of RESAR-41, Docket Number STN 50-480 that an evaluation of probabilities of failure of the electrical components is unacceptable as a design basis in lieu of the single failure criterion.

Westinghouse has completed a modified large break LOCA analysis with an SJ49 valve failed closed during the Injection Phase being a single active failure. The analysis assumed a limiting break of CD = 0.4, all pumps are running (including both RHR pumps), RHR flow is to one (1) RCS cold leg, and a calculated total flow of 2864 gpm at 25 psia (RCS Pressure). The peak cladding temperature (PCT) of the fuel will increase a maximum of 29°F. The original large break LOCA analysis assumed a limiting break of CD = 0.4, flow to all four (4) cold legs (i.e., three (3) intact loops), and a calculated flow from one SI train of 3374 gpm at 25 psia (RCS Pressure). It considered a limiting single failure to be one RHR pump and failure of the SI pumps on the affected train. The original large break LOCA analysis PCT calculation, using a BASH analysis, resulted in a PCT of 2091°F. Therefore, even with the proposed failure, the PCT will remain below the limitation of 2200°F (i.e., 2120°F) as required by Code of Federal Regulations 10CFR50 Appendix K.

As indicated above, the probability of the relay failure is very low. Also, there are two (2) means by which valve failure can be

ANALYSIS OF OCCURRENCE: (cont'd)

detected (i.e., independent valve position indications and alarms and Control Room overhead alarm upon either valve not being fully open). Therefore, this event did not significantly affect the health or safety of the public. However, since the design was not in accordance with the required design as stipulated in the UFSAR, this event is reportable in accordance with Code of Federal Regulations 10CFR 50.73(a)(2)(ii)(B).

Actions taken to exit Technical Specification Action Statement 3.0.3, upon identification of this event on November 17, 1989, included: tagging of the SJ49 motor breakers in the open position; revision of the Operators Logs to require verification of SJ49 open position once per shift, conduct briefings with shift personnel; and revision of Emergency Operating Procedures (EOPs) to ensure SJ49's are powered-up for switchover to the Cold Recirculation Phase. On November 17, 1989 at 1731 hours and 1735 hours, Unit 1 and Unit 2 Technical Specification Action Statement 3.0.3 was exited, respectively.

A review of the actions taken to exit Technical Specification Action Statement 3.0.3 revealed that the SORC review of the EOP changes was not conducted in accordance with Administrative Procedure AP-32, "Implementing Procedures Program". The EOP changes involved a potential unreviewed safety question (USQ) as identified by Code of Federal Regulations 10CFR50.59. As per AP-32, a safety evaluation, assessing the safety impact of the proposed EOP changes, was required to address any USQ concerns. When the EOP changes were presented, a safety evaluation had not been prepared.

SORC did review the proposed EOP changes in depth. The discussion included identification, by engineering personnel, that a qualitative PRA indicated minimal risk with the proposed changes. Additionally, the early restoration of breaker power was determined to be prudent, from a human factors perspective which included: the switchover to the Cold Recirculation Phase would be less complicated; the potential for miscommunication to the assigned Nuclear Equipment Operator during a critical evolution in the EOP's would be eliminated; and the NEO would not be unnecessarily tied up during the early phases of an accident. However, on November 20, 1989, the NRC identified that the early restoration of breaker power re-instituted the USQ concern of a single failure of an SJ49 valve closure during the Injection Phase of an accident. Subsequently, the EOP was revised to require that NEO's be assigned (at the beginning of an accident) to stand by the SJ49 MCC's. They would then close in the breaker(s) just prior to valve actuation as per procedure.

CORRECTIVE ACTIONS:

The 230 volt breakers for the Unit 1 and Unit 2 SJ49 valves have been cleared and tagged open.

CORRECTIVE ACTION: (cont'd)

Emergency operating procedures have been revised to direct the control room operator to dispatch an operator to be on standby at the breakers to restore power to the SJ49 valves, for the affected unit, when directed by the control room operator.

Primary plant logsheets have been revised to require the operator to verify (once per shift) that the breakers for the SJ49 valves are open. This satisfies the Technical Specification Surveillance which requires verification once per twelve (12) hours that the power is removed from the valves. This was formerly accomplished by the control room operator observing the power lockout switches in the control room.

A briefing was conducted with all shift personnel, prior to their assuming the watch, after identification of this event. The circumstances associated with the SJ49 valve concerns and the changes to the procedures and logs were explained in detail to the shift personnel.

Engineering evaluation S-C-SJ-NEE-0373-0, to study the significance of the single failure of the SJ49 valve control circuit, has been issued. Corrective actions as identified above were deemed to be satisfactory.

SJ49 circuitry design modifications will be completed during the next refueling outage for each Unit.

An Engineering review to identify other valves with similar power lockout circuitry concerns (as discussed in this LER) has been completed. A similar condition exists with the SJ54 Accumulator Outlet Valves, for both Units, as a result of the same design change which modified the SJ49 circuitry. However, since the breakers are normally open for these valves to comply with Technical Specification Surveillance 4.5.1c, the single failure concern does not exist.

The 1987 design change procedure and current design change procedure have been reviewed. Both procedures comply with the requirements of 10CFR 50 Appendix B. The current procedure better defines the organization and instructions for development of a design change and documentation of the judegments and decisions made in justifying design changes.

The procedure for performing 10CFR 50.59 evaluations was reviewed. NSAC 125 and independent audit enhancements were verified to be incorporated. Documentation of the UFSAR sections reviewed is now a requirement.

The UFSAR sections dealing with the issues addressed by this LER will be reviewed. Where necessary, requirements will be clarified.

In addition to the management investigation of this event, an independent review is being conducted by the PSE&G Off-site Safety

CORRECTIVE ACTION: (cont'd)

Review Group. This review is focusing on the events leading up to the SJ49 circuitry design change error to identify the root cause, contributing causes and corrective action recommendations.

Due to the SORC noncompliance with required station Administrative Procedure AP-32, the following actions will be completed by February 1990:

1. Review of events addressed in this LER by all SORC members;

2. Re-evaluation of the SORC process for possible enhancement; and

3. Review of event with PSE&G personnel who implement AP-32 requirements

An ongoing training program, initiated circa 1988, to enhance the administrative capabilities of PSE&G engineers and support personnel in the preparation and approval of design changes and 10CFR 50.59 safety evaluations is continuing. To date, over 430 personnel have been trained in the preparation and approval of design changes. Approximately 100 individuals have been trained in the preparation of safety evaluations.

General Manager -
Salem Operations

MJP:pc

SORC Mtg. 89-123

LICENSED DESIGN

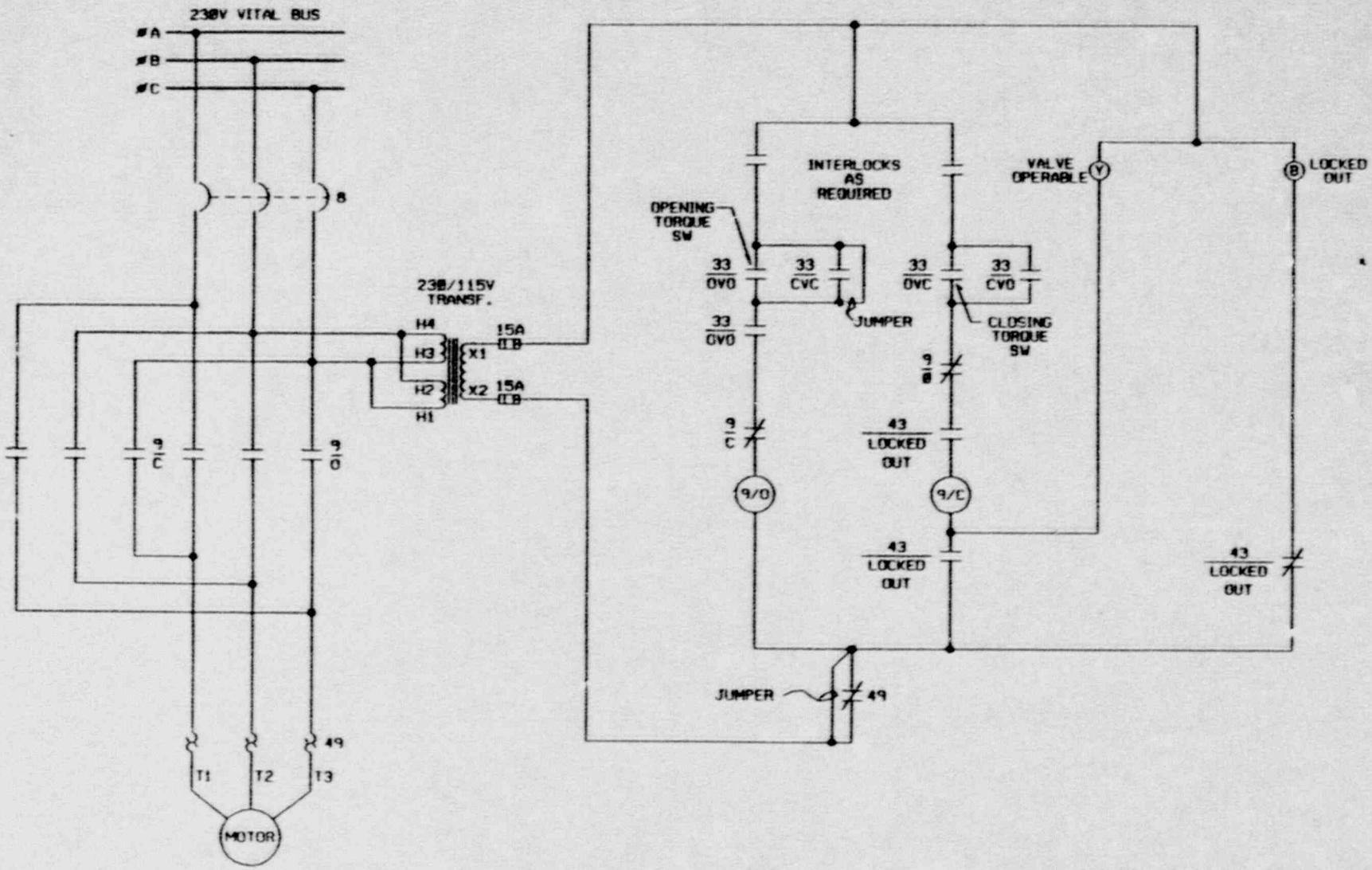

TYPICAL MOV 230V POWER LOCKOUT

UPDATED FSAR FIGURE 7.3-3

CURRENT INSTALLATION

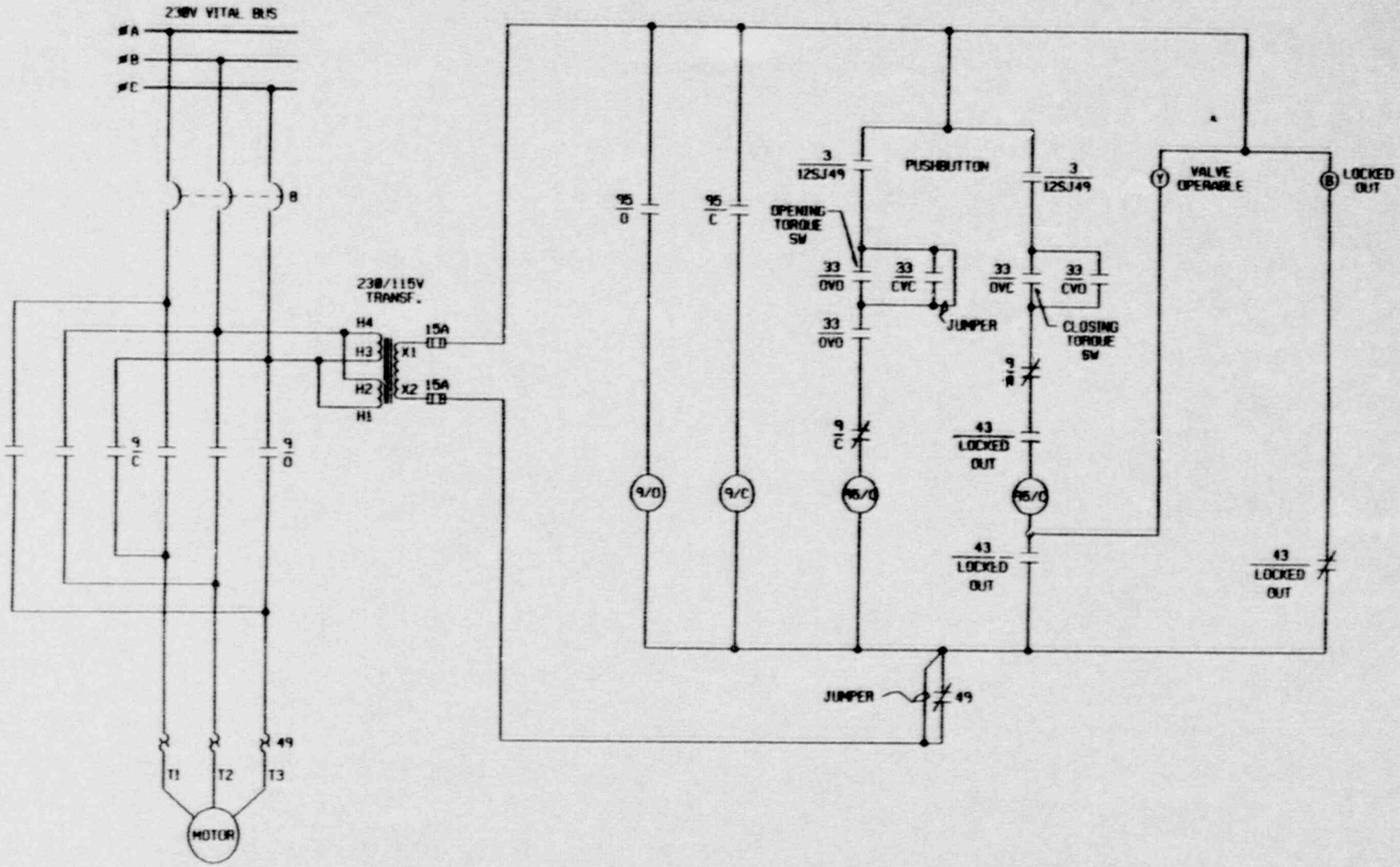

SJ49 MOV 230V POWER LOCKOUT