GLOSSARY

ALARA is an acronym for As Low As Reasonably Achievable

Ancillary or Ancillary Equipment is the generic name of a device used to carry out short term operations.

Bottom Lid means the removable lid that fastens to the bottom of the HI-TRAC VW transfer cask body to create a gasketed barrier against in-leakage of pool water in the space around the MPC.

BLEU Fuel is Blended Low Enriched Uranium fuel that is essentially identical to UO_2 fuel except for the presence of small amount of impurities.

BWR is an acronym for Boiling Water Reactor.

CG is an acronym for center of gravity.

Commercial Spent Fuel or CSF refers to nuclear fuel used to produce energy in a commercial nuclear power plant.

Confinement Boundary is the outline formed by the all-welded cylindrical enclosure of the MPC shell, MPC baseplate, MPC lid, MPC port cover plates, and the MPC closure ring which provides redundant sealing.

Confinement System means the Multi-Purpose Canister (MPC) which encloses and confines the spent nuclear fuel during storage.

Controlled Area means that area immediately surrounding an ISFSI for which the owner/user exercises authority over its use and within which operations are performed.

Cooling Time (or post-irradiation cooling time) for a spent fuel assembly is the time between reactor shutdown and the time the spent fuel assembly is loaded into the MPC.

Critical Characteristic means a feature of a component or assembly that is necessary for the proper safety function of the component or assembly. Critical characteristics of a material are those attributes that have been identified, in the associated material specification, as necessary to render the material's intended function.

DAS is the abbreviation for the Decontamination and Assembly Station. It means the location where the Transfer Cask is decontaminated and the MPC is processed (i.e., where all operations culminating in lid and closure ring welding are completed).

DBE means Design Basis Earthquake.

DCSS is an acronym for Dry Cask Storage System.

Damaged Fuel Assembly is a fuel assembly with known or suspected cladding defects, as determined by review of records, greater than pinhole leaks or hairline cracks, empty fuel rod locations that are not replaced with dummy fuel rods, missing structural components such as grid spacers, whose structural integrity has been impaired such that geometric rearrangement of fuel or gross failure of the cladding is expected based on engineering evaluations, or those that cannot be handled by normal means. Fuel assemblies that cannot be handled by normal means due to fuel cladding damage are considered fuel debris..

Damaged Fuel Container (or Canister) or DFC means a specially designed enclosure for damaged fuel or fuel debris which permits flow of gaseous and liquid media while minimizing dispersal of gross particulates.

Damaged Fuel Isolator or DFI means specially designed barriers installed at the top and bottom of the storage cell space which permit flow of gaseous and liquid media while preventing the potential migration of fissile material from fuel assemblies with cladding damage. DFIs are used ONLY with damaged fuel assemblies which can be handled by normal means and whose structural integrity is such that geometric rearrangement of fuel is not expected. Damaged fuel stored in DFIs may contain missing or partial fuel rods and or fuel rods with known or suspected cladding defects greater than hairline cracks or pinhole leaks.

Design Basis Load (DBL) is a loading which bounds one or more events that are applicable to the storage system during its service life.

Design Heat Load is the computed heat rejection capacity of the HI-STORM system with a certified MPC loaded with CSF stored in uniform storage with the ambient at the normal temperature and the peak cladding temperature (PCT) limit at 400ºC. The Design Heat Load is less than the thermal capacity of the system by a suitable margin that reflects the conservatism in the system thermal analysis.

Design Life is the minimum duration for which the component is engineered to perform its intended function set forth in this SAR, if operated and maintained in accordance with this SAR.

Design Report is a document prepared, reviewed and QA validated in accordance with the provisions of 10CFR72 Subpart G. The Design Report shall demonstrate compliance with the requirements set forth in the Design Specification. A Design Report is mandatory for systems, structures, and components designated as Important to Safety. The SAR serves as the Design Report for the HI-STORM FW System.

Design Specification is a document prepared in accordance with the quality assurance requirements of 10CFR72 Subpart G to provide a complete set of design criteria and functional requirements for a system, structure, or component, designated as Important to Safety, intended

to be used in the operation, implementation, or decommissioning of the HI-STORM FW System. The SAR serves as the Design Specification for the HI-STORM FW System.

Enclosure Vessel (or MPC Enclosure Vessel) means the pressure vessel defined by the cylindrical shell, baseplate, port cover plates, lid, closure ring, and associated welds that provides confinement for the contents within the MPC. The Enclosure Vessel (EV) and the fuel basket together constitute the multi-purpose canister.

Equivalent (or Equal) Material is a material with critical characteristics (see definition above) that meet or exceed those specified for the designated material.

Fracture Toughness is a property which is a measure of the ability of a material to limit crack propagation under a suddenly applied load.

FSAR is an acronym for Final Safety Analysis Report (10CFR72).

Fuel Basket means a honeycombed structural weldment with square openings which can accept a fuel assembly of the type for which it is designed.

Fuel Building is the generic term used to denote the building in which the fuel loading and where part of "short-term operations" will occur. The Fuel Building is a Part 50 controlled structure.

Fuel Debris is ruptured fuel rods, severed rods, loose fuel pellets, containers or structures that are supporting these loose fuel assembly parts, or fuel assemblies with known or suspected defects which cannot be handled by normal means due to fuel cladding damage.

Fuel Spacer or Shim is a metallic part interposed in the space between the fuel and the MPC cavity at either the top or the bottom (or both) ends of the fuel to minimize the axial displacement of the SNF within the MPC due to longitudinal inertia forces.

High Burnup Fuel, or HBF is a commercial spent fuel assembly with an average burnup greater than 45,000 MWD/MTU.

HI-TRAC VW transfer cask or HI-TRAC VW means the transfer cask used to house the MPC during MPC fuel loading, unloading, drying, sealing, and on-site transfer operations to a HI-STORM storage overpack or HI-STAR storage/transportation overpack. The HI-TRAC shields and protects the loaded MPC.

HI-TRAC VW Water Jacket means the empty steel cylinder which is attached to the outside of the "standard" and "V" versions of the HI-TRAC VW. During transfer of a loaded MPC, this cylinder is filled with water for neutron shielding.

HI-TRAC VW Version V2 Neutron Shield Cylinder (NSC) means the steel-holtite-steel

cylinder attached to the HI-TRAC VW Version V2 to provide neutron shielding. This option is provided to support transfer of loaded MPCs at sites which can not employ the standard version HI-TRAC VW with water jacket due to crane weight lifting limitations.

HI-STORM overpack or storage overpack means the cask that receives and contains the sealed multi-purpose canisters containing spent nuclear fuel for long term storage. It provides the gamma and neutron shielding, ventilation passages, missile protection, and protection against natural phenomena and accidents for the loaded MPC.

HI-STORM FW System consists of any loaded MPC model placed within the HI-STORM FW overpack.

Important to Safety (ITS) means a function or condition required to store spent nuclear fuel safely; to prevent damage to spent nuclear fuel during handling and storage, and to provide reasonable assurance that spent nuclear fuel can be received, handled, packaged, stored, and retrieved without undue risk to the health and safety of the public.

NDT is an acronym for Nil Ductility Transition Temperature, which is defined as the temperature at which the fracture stress in a material with a small flaw is equal to the yield stress in the same material if it had no flaws.

Neutron Absorber is a generic term to indicate any neutron absorber material qualified for use in the HI-STORM FW System.

Neutron Shielding means a material used to thermalize and capture neutrons emanating from the radioactive spent nuclear fuel.

Non-Fuel Hardware is defined as Burnable Poison Rod Assemblies (BPRAs), Thimble Plug Devices (TPDs), Control Rod Assemblies (CRAs), Axial Power Shaping Rods (APSRs), Wet Annular Burnable Absorbers (WABAs), Rod Cluster Control Assemblies (RCCAs), Control Element Assemblies (CEAs), Neutron Source Assemblies (NSAs), water displacement guide tube plugs, orifice rod assemblies, Instrument Tube Tie Rods (ITTRs), Guide Tube Anchors (GTAs), vibration suppressor inserts, and components of these devices such as individual rods.

Planar-Average Initial Enrichment is the average of the distributed fuel rod initial enrichments within a given axial plane of the assembly lattice.

Plain Concrete is concrete that is unreinforced.

Post-Core Decay Time (PCDT) is synonymous with cooling time.

PWR is an acronym for pressurized water reactor.

Reactivity is used synonymously with effective neutron multiplication factor or k-effective.

Regionalized Fuel Storage is a term used to describe an optimized fuel loading strategy wherein the storage locations are ascribed to distinct regions each with its own maximum allowable specific heat generation rate.

Removable Shielding Girdle is an ancillary designed to be installed to provide added shielding to the personnel working in the top region of the transfer cask.

Repaired/Reconstituted Fuel Assembly is a spent fuel assembly which contains dummy fuel rods that displace an amount of water greater than or equal to the original fuel rods and/or which contain structural repairs so it can be handled by normal means. If irradiated dummy stainless steel rods are present in the fuel assembly, the dummy/ replacement rods will be considered in the site specific dose calculations.

SAR is an acronym for Safety Analysis Report.

TABLE 1.0.1

HI-STORM FW SYSTEM COMPONENTS

Item	Designation (Model Number)
Overpack	HI-STORM FW
PWR Multi-Purpose Canisters	MPC-37, MPC-32ML
BWR Multi-Purpose Canister	MPC-89
Transfer Cask	HI-TRAC VW (Standard), HI-TRAC VW Version V, HI-TRAC VW Version V2

TABLE 1.0.3 ALTERNATIVES TO NUREG-1536		
NUREG-1536 Guidance	**Alternate Method to Meet NUREG-1536 Intent**	**Justification**
2.V.2.(b)(3)(f) "10CFR Part 72 identifies several other natural phenomena events (including seiche, tsunami, and hurricane) that should be addressed for spent fuel storage."	A site-specific safety analysis of the effects of seiche, tsunami, and hurricane on the HI-STORM FW system must be performed prior to use if these events are applicable to the site.	In accordance with NUREG-1536, 2.V.(b)(3)(f), if seiche, tsunami, and hurricane are not addressed in the FSAR and they prove to be applicable to the site, a safety analysis is required prior to approval for use of the DCSS under either a site-specific, or general license.
3.V.1.d.i.(2)(a), page 3-11, "Drops with the axis generally vertical should be analyzed for both the conditions of a flush impact and an initial impact at a corner of the cask..."	The HI-STORM system components are lifted and handled by lifting equipment that meet the applicable provisions in NUREG-0612 and ANSI N14.6, as required, to preclude an uncontrolled lowering of the load.	All lifting and handling devices are also required to meet the ANSI or applicable code provisions to render the potential of a drop event in the part 72 jurisdiction non-credible.
3.V.2.b.i.(1), Page 3-19, Para. 1, “All concrete used in storage cask system ISFSIs, and subject to NRC review, should be reinforced...”	HI-STORM FW, like HI-STORM 100, uses plain concrete. The structural function is rendered by a double wall shell of carbon steel. The primary steel shell structure is designed to meet ASME Section III, Subsection NF stress limits for all normal service conditions.	Concrete is provided in the HI-STORM overpack primarily for the purpose of radiation shielding, the reinforcement in the concrete will only serve to create locations of micro-voids that will increase the emitted dose from the cask. Table 1.2.5 of this FSAR and Appendix 1.D of the HI-STORM 100 FSAR which provide technical and placement requirements on plain concrete are also invoked for HI-STORM FW concrete.
4.V.5.c, Page 4-10, Para. 3 "free volume calculations should account for thermal expansion of the cask internal components and the fuel when subjected to accident temperatures.	All free volume calculations use nominal Confinement Boundary dimensions, but the volume occupied by the fuel assemblies is calculated using maximum weights and minimum densities.	Calculating the volume occupied by the fuel assemblies using maximum weights and minimum densities conservatively over predicts the volume occupied by the fuel and correspondingly under predicts the remaining free volume.

circumscribing cylindrical canister shell. The egg-crate construction and cell-to-canister shell interface employed in the MPC basket impart the structural stiffness necessary to satisfy the limiting load conditions discussed in Chapter 2. Figures 1.1.4 and 1.1.5 provide cross-sectional views of the PWR and BWR fuel baskets, respectively. Figures 1.1.6 and 1.1.7 provide isometric perspective views of the PWR and BWR fuel baskets, respectively.

The HI-TRAC VW transfer cask is required for shielding and protection of the SNF during loading and closure of the MPC and during movement of the loaded MPC from the cask loading area of a nuclear plant spent fuel pool to the storage overpack. Figure 1.1.8 shows a cut away view of the typical transfer cask. The MPC is placed inside the HI-TRAC VW transfer cask and moved into the cask loading area of nuclear plant spent fuel pools for fuel loading (or unloading). The HI-TRAC VW/MPC assembly is designed to prevent (contaminated) pool water from entering the narrow annular space between the HI-TRAC VW and the MPC while the assembly is submerged. The HI-TRAC VW transfer cask also allows dry loading (or unloading) of SNF into the MPC in a hot cell.

To summarize, the HI-STORM FW System has been engineered to:

- maximize shielding and physical protection for the MPC;
- maximize resistance to flood and wind;
- minimize the extent of handling of the SNF;
- minimize dose to operators during loading and handling;
- require minimal ongoing surveillance and maintenance by plant staff;
- facilitate SNF transfer of the loaded MPC to a compatible transport overpack for transportation;
- permit rapid and unencumbered decommissioning of the ISFSI;

Finally, design criteria for a forced helium dehydration (FHD) system, as described in Appendix 2.B of the HI-STORM 100 FSAR [1.1.3] is compatible with HI-STORM-FW. Thus, the references to a FHD system in this FSAR imply that its design criteria must comply with the provisions in the latest revision of the HI-STORM 100 FSAR (Docket No. 72-1014).

All HI-STORM FW System components (overpack, transfer cask, and MPC) are designated ITS and their sub-components are categorized in accordance with NUREG/CR-6407 [1.1.4].

The principal ancillaries used in the site implementation of the HI-STORM FW System are summarized in Section 1.2 and referenced in Chapter 9 in the context of loading operations. A listing of common ancillaries needed by the host site is provided in Table 9.2.1. The detailed design of these ancillaries is not specified in this FSAR. In some cases, there are multiple distinct ancillary designs available for a particular application (such as a forced helium dehydrator or a vacuum drying system for drying the MPC) and as such, not every ancillary will be needed by every site. Ancillary designs are typically specific to a site to meet ALARA and personnel safety objectives.

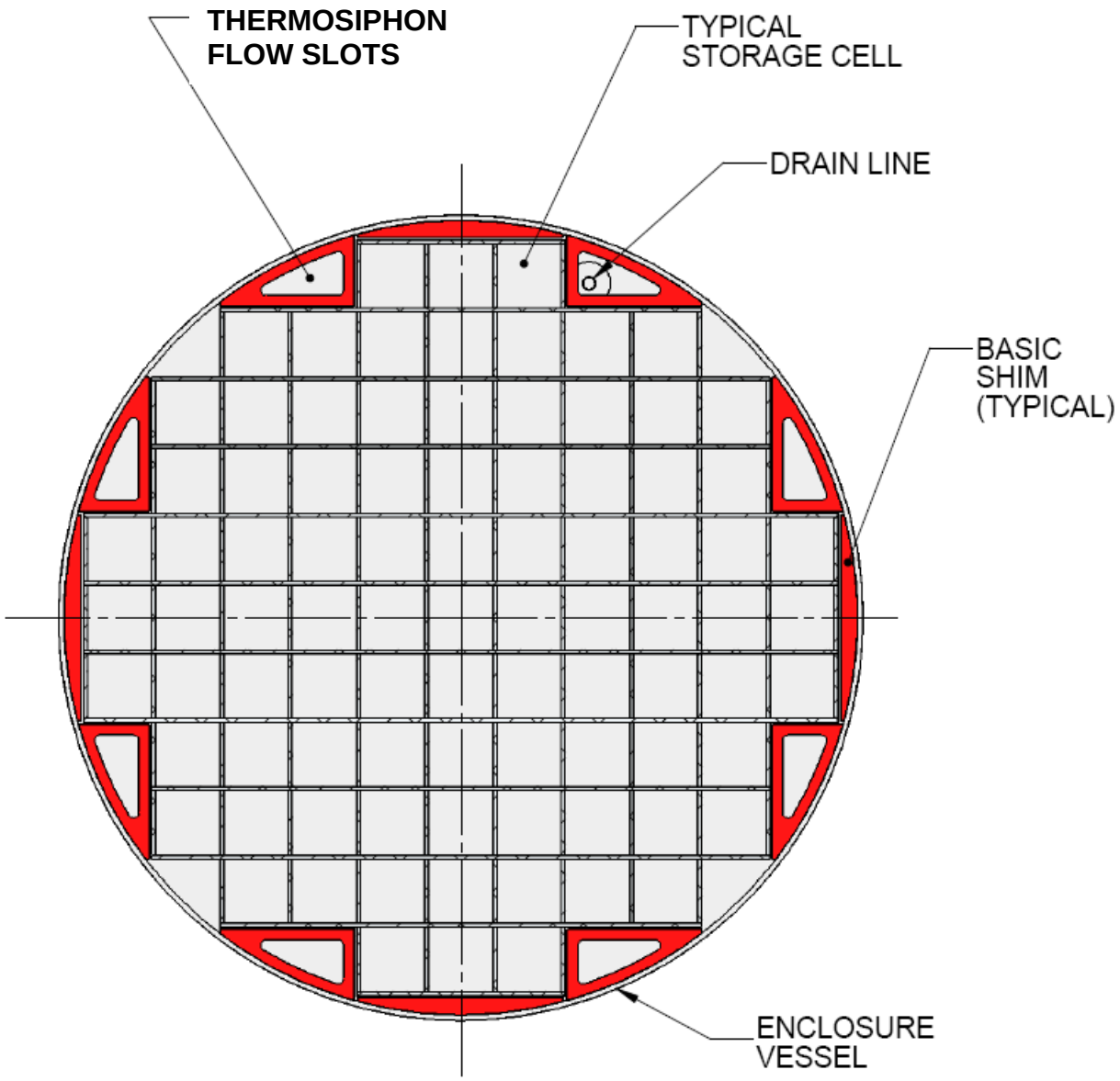

FIGURE 1.1.5: MPC-89 IN CROSS SECTION

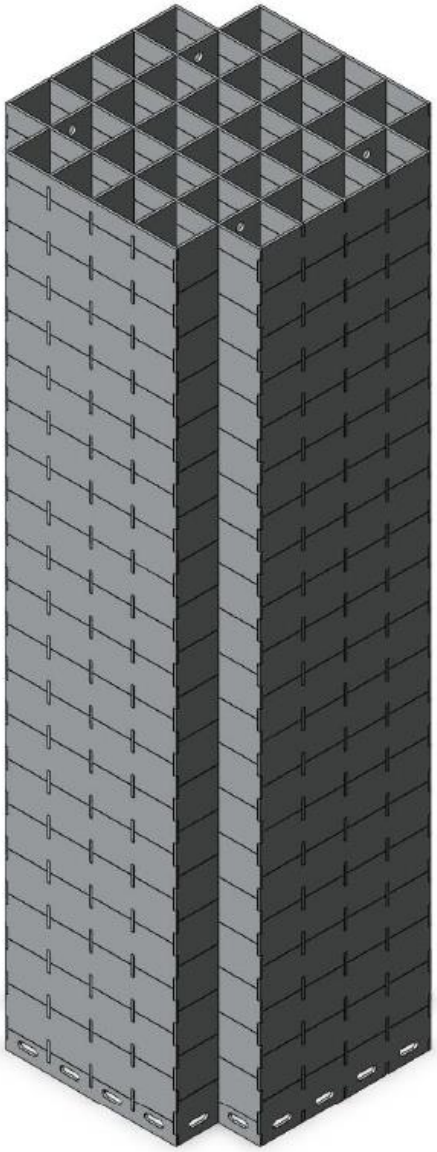

FIGURE 1.1.6B: MPC-32ML PWR FUEL BASKET (32 STORAGE CELLS) IN PERSPECTIVE VIEW

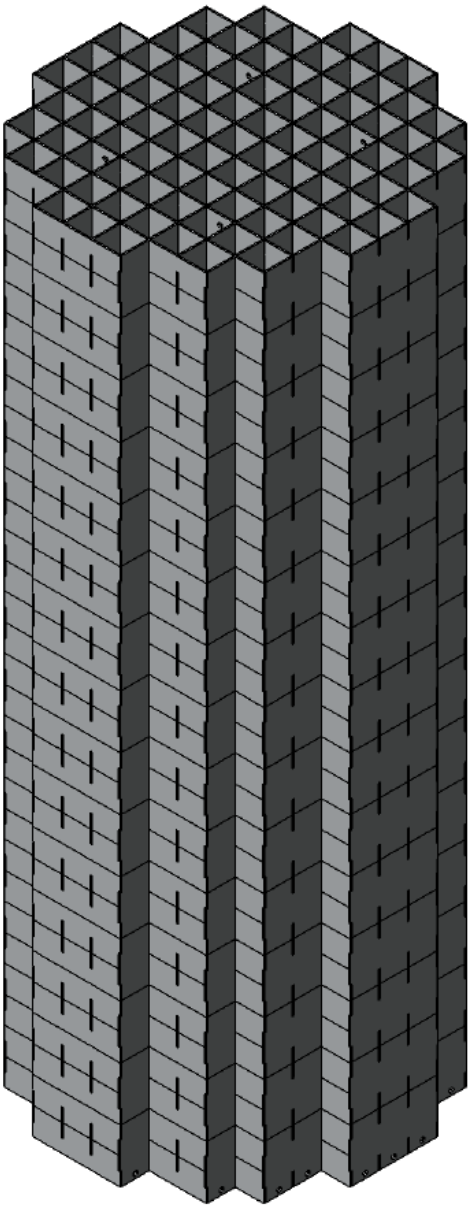

FIGURE 1.1.7: BWR FUEL BASKET (89 STORAGE CELLS) IN PERSPECTIVE VIEW

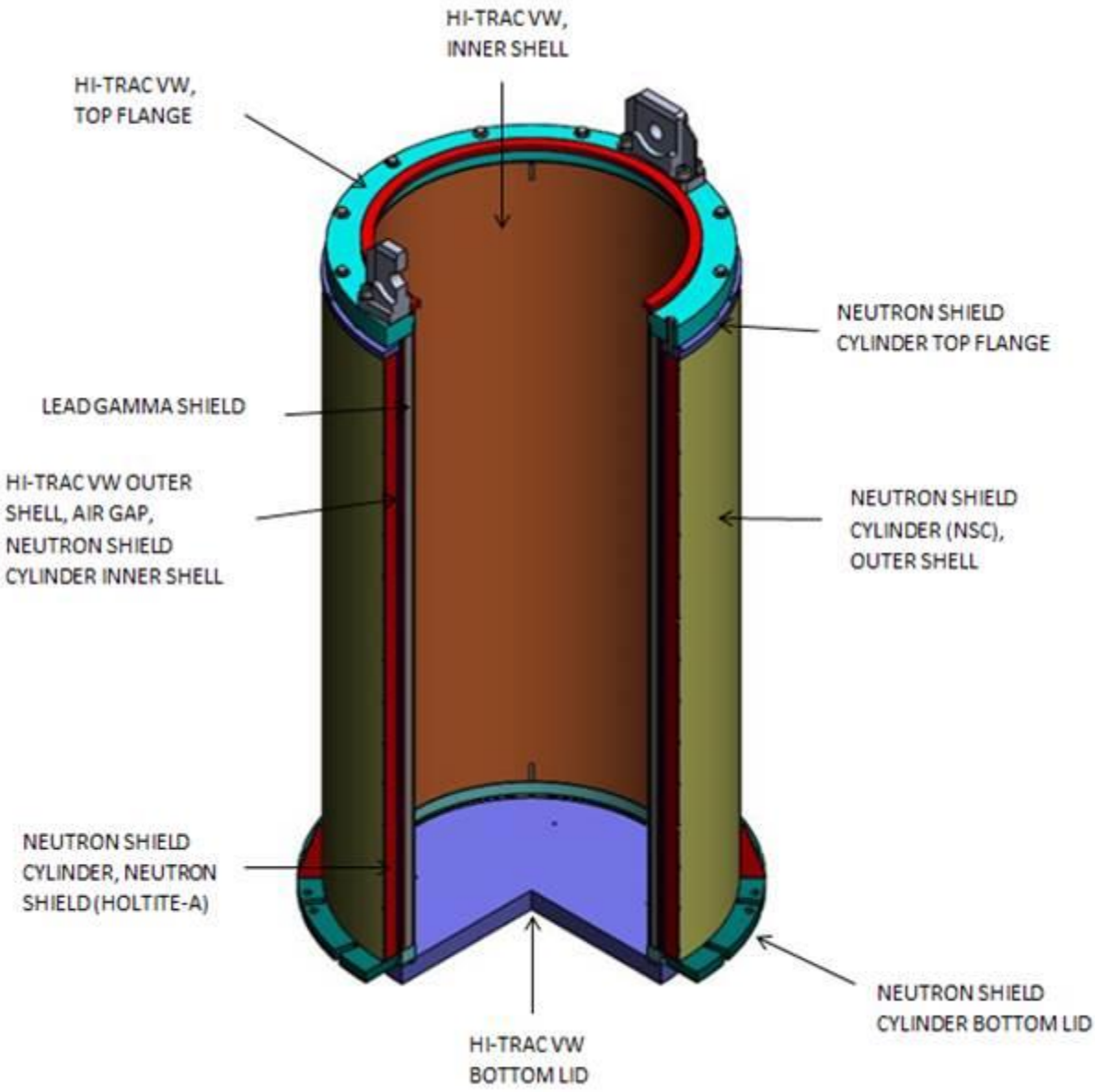

FIGURE 1.1.9: CUTAWAY VIEW OF HI-TRAC VW VERSION 2

The HI-STORM FW System shares certain common attributes with the HI-STORM 100 System, Docket No. 72-1014, namely:

i. the honeycomb design of the MPC fuel basket;
ii. the effective distribution of neutron and gamma shielding materials within the system;
iii. the high heat dissipation capability;
iv. the engineered features to promote convective heat transfer by passive means;
v. a structurally robust steel-concrete-steel overpack construction.

The honeycomb design of the MPC fuel baskets renders the basket into a multi-flange egg-crate structure where all structural elements (i.e., cell walls) are arrayed in two orthogonal sets of plates. Consequently, the walls of the cells are either completely co-planar (i.e., no offset) or orthogonal with each other. There is complete edge-to-edge continuity between the contiguous cells to promote conduction of heat.

The composite shell construction in the overpack, steel-concrete-steel, allows ease of fabrication and eliminates the need for the sole reliance on the strength of concrete.

A description of each of the components is provided in this section, along with fabrication and safety feature information.

1.2.1.1 Multi-Purpose Canisters

The MPC enclosure vessels are cylindrical weldments with identical and fixed outside diameters. Each MPC is an assembly consisting of a honeycomb fuel basket (Figures 1.1.6 and 1.1.7), a baseplate, a canister shell, a lid, and a closure ring. The number of SNF storage locations in an MPC depends on the type of fuel assembly (PWR or BWR) to be stored in it.

Subsection 1.2.3 and Table 1.2.1 summarize the allowable contents for each MPC model listed in Table 1.0.1. Subsection 2.1.8 provides the detailed specifications for the contents authorized for storage in the HI-STORM FW System. Drawings for the MPCs are provided in Section 1.5.

The MPC enclosure vessel is a fully welded enclosure, which provides the confinement for the stored fuel and radioactive material. The MPC baseplate and shell are made of stainless steel (Alloy X, see Appendix 1.A). The lid is a two piece construction, with the top structural portion made of Alloy X. The confinement boundary is defined by the MPC baseplate, shell, lid, port covers, and closure ring.

The HI-STORM FW System MPCs shares external and internal features with the HI-STORM 100 MPCs certified in the §72-1014 docket, as summarized below.

i. All HI-STORM FW MPCs have an identical enclosure vessel which mimics the enclosure vessel design details used in the HI-STORM 100 counterparts including the shell thickness, the vent and drain port sizes, construction details of the top lid and closure ring, and closure weld details. The baseplate is made slightly thicker to ensure its bending rigidity is comparable to its counterpart in the HI-STORM 100 system. The material of construction of the pressure retaining components is also identical (options of stainless steels, denoted as Alloy X, are explained in Appendix 1.A herein as derived from the HI-STORM 100 FSAR

cover plates. The MPC lid provides sufficient rigidity to allow the entire MPC loaded with SNF to be lifted by the suitably sized threaded anchor locations (TALs) in the MPC lid.

As discussed later in this section, the height of the MPC cavity plays a direct role in setting the amount of shielding available in the transfer cask. To maximize shielding and achieve ALARA within the constraints of a nuclear plant (such as crane capacity), it is necessary to minimize the cavity height of the MPC to the length of the fuel to be stored in it. Accordingly, the height of the MPC cavity is customized for each fuel type listed in Section 2.1. Table 3.2.1 provides the data to set the MPC cavity length as a small adder to the nominal fuel length (with any applicable NFH) to account for manufacturing tolerance, irradiation growth and thermal expansion effects.

For fuel assemblies that are shorter than the MPC cavity length (such as those without a control element in PWR SNF) a fuel shim may be utilized (as appropriate) to reduce the axial gap between the fuel assembly and the MPC cavity to approximately 1.5-2.5 inches. A small axial clearance is provided to account for manufacturing tolerances and the irradiation and thermal growth of the fuel assemblies. The actual length of fuel shims (if required) will be determined on a site-specific and fuel assembly-specific basis.

All components of the MPC assembly that may come into contact with spent fuel pool water or the ambient environment are made from stainless steel alloy or aluminum/aluminum alloy materials. Prominent among the aluminum based materials used in the MPC is the Metamic–HT neutron absorber lattice that comprises the fuel basket. As discussed in Chapter 8, concerns regarding interaction of coated carbon steel materials and various MPC operating environments [1.2.1] are not applicable to the HI-STORM FW MPCs. All structural components in an MPC enclosure vessel shall be made of Alloy X, a designation whose origin, as explained in the HI-STORM 100 FSAR [1.1.3], lies in the U.S. DOE's repository program.

As explained in Appendix 1.A, Alloy X (as defined in this FSAR) may be one of the following materials.

- Type 316
- Type 316LN
- Type 304
- Type 304LN
- Duplex Stainless Alloy S31803

Any stainless steel part in an MPC may be fabricated from any of the acceptable Alloy X materials listed above.

The Alloy X group approach is accomplished by qualifying the MPC for all mechanical, structural, radiological, and thermal conditions using material thermo-physical properties that are the least favorable for the entire group for the analysis in question. For example, when calculating the rate of heat rejection to the outside environment, the value of thermal conductivity used is the lowest for the candidate material group. Similarly, the stress analysis calculations use the lowest value of the ASME Code allowable stress intensity for the entire group. Stated differently, a material has been defined that is referred to as Alloy X, whose thermo-physical properties, from the MPC design perspective, are the least favorable of the above four candidate materials.

The evaluation of the candidate Alloy X materials to determine the least favorable properties is

procedures will be used in both overpack types which will be important for configuration control at sites where both systems may be deployed.

The principal function of the concrete is to provide shielding against gamma and neutron radiation. However, the massive bulk of concrete imparts a large thermal inertia to the HI-STORM FW overpack, allowing it to moderate the rise in temperature of the system under hypothetical conditions when all ventilation passages are assumed to be blocked. During the postulated fire accident the high thermal inertia characteristics of the HI-STORM FW concrete control the temperature of the MPC. Although the annular concrete mass in the overpack shell is not a structural member, it does act as an elastic/plastic filler of the inter-shell space buttressing the steel shells.

Density and compressive strength are the key parameters that bear upon the performance of concrete in the HI-STORM FW System. For evaluating the physical properties of concrete for completing the analytical models, conservative formulations of Reference [1.2.2] are used.

Thermal analyses, presented in Chapter 4, show that the temperatures during normal storage conditions do not threaten the physical integrity of the HI-STORM FW overpack concrete.

The principal materials used in the manufacturing of the overpack are listed in the licensing drawings and the acceptance criteria are provided in Chapter 10. Tables 1.2.6 and 1.2.7 provide applicable code paragraphs for manufacturing the HI-STORM FW overpack.

1.2.1.3 HI-TRAC VW Transfer Cask

The HI-TRAC VW transfer cask (Figure 1.1.8) is engineered to be used to perform all short-term loading operations on the MPC beginning with fuel loading and ending with the emplacement of the MPC in the storage overpack. The HI-TRAC VW is also used for short term unloading operations beginning with the removal of the MPC from the storage overpack and ending with fuel unloading. There are three versions of the HI-TRAC VW. The “standard” and “V” versions employ a water jacket to provide neutron shielding. The HI-TRAC version VW version V2 removes the water jacket and uses a neutron shield cylinder, NSC, for neutron shielding.

HI-TRAC VW is designed to meet the following specific performance objectives that are centered on ALARA and physical safety of the plant’s operations staff.

a. Provide maximum shielding to the plant personnel engaged in conducting short-term operations.
b. Provide protection of the MPC against extreme environmental phenomena loads, such as tornado-borne missiles, during short-term operations.
c. Serve as the container equipped with the appropriate lifting appurtenances in accordance with ANSI N14.6 [1.2.3] to lift, move, and handle the MPC, as required, to perform the short-term operations.
d. Provide the means to restrain the MPC from sliding and protruding beyond the shielding envelope of the transfer cask under a (postulated) handling accident.
e. Facilitate the transfer of a loaded MPC to or from the HI-STORM FW overpack (or another physically compatible storage or transfer cask) by vertical movement of the MPC without any risk of damage to the canister by friction.

The above performance demands on the HI-TRAC VW are met by its design configuration as

thickness of the lead cylinder can be varied within the limits given in Table 3.2.2. The nominal radial thickness of the water jacket is fixed and therefore the outside diameter of the HI-TRAC will vary accordingly.

The above design approach permits the quantity of shielding around the body of the transfer cask to be maximized for a given length and weight of fuel in keeping with the practices of ALARA. At some host sites, a lead thickness greater than allowed by Table 3.2.2 may be desirable and may be feasible but will require a site-specific safety evaluation.

The use of the suffix VW in the HI-TRAC's designation is intended to convey this **V**ariable **W**eight feature incorporated by changing the HI-TRAC height and lead thickness to best accord with the MPC height and plant's architecture. Table 3.2.6 provides the operating weight data for a HI-TRAC VW when handling the Reference PWR and BWR fuel in Table 1.0.4.

The principal materials used in the manufacturing of the transfer cask are listed in the licensing drawings and the acceptance criteria are provided in Chapter 10. Tables 1.2.6 and 1.2.7 provide applicable code paragraphs for manufacturing the HI-TRAC VW.

A minor variation to the HI-TRAC VW transfer cask design is termed "Version V", which adds a natural ventilation feature to the standard embodiment. The natural ventilation feature slightly increases the inner diameter of the HI-TRAC and add an air inlet on the HI-TRAC's bottom lid. The inlet and HI-TRAC annulus are configured to minimize leakage of radiation and the Version V is designed to ensure there is no change in the structural capacity of the HI-TRAC. The Version V licensing drawing (see Section 1.5) shows the natural ventilation passages installed on the standard HI-TRAC VW configuration.

Another variation to the HI-TRAC VW transfer cask design is termed "Version V2", which adds a removable neutron shield cylinder (NSC) to the standard embodiment. To ensure maximum radiation protection to the loading crew, the weight of the loaded HI-TRAC is maximized to the extent possible allowed by the geometric constraints of the cask pit and the capacity of the cask crane. Because the lifted weight is heaviest when the transfer cask is submerged in the pool water, in some cases it is more ALARA prudent to make the neutron shield cylinder (NSC) detachable from the cask. The main body of the transfer cask provides most of the gamma protection as well as serving as the carrier of the MPC (Meeting the stress limits for Linear structures for Class 3 of Section III subsection NF of the ASME code). The special lifting device used to handle the transfer cask is designed to meet safety factors of ANSI. For ALARA, the detachable NSC is fastened to the cask body at the earliest point in the loading evolution when the lift capacity and geometric constraints are no longer controlling. While the NSC serves to primarily provide neutron shielding, it along with the main structure of the transfer cask and the cask/NSC fastening device must meet credible mechanical loadings during the on-site transport operation applicable to the ISFSI site with the acceptance criteria set forth in Chapter 2. A typical NSC design is illustrated in the Licensing Drawing in Section 1.5.

Unless otherwise stated, the discussions in Chapter 1 mentioning the HI-TRAC VW refer to the HI-TRAC VW (standard) version, the HI-TRAC VW Version V and the HI-TRAC VW Version V2.

1.2.1.4 Shielding Materials

Steel and concrete are the principal shielding materials in the HI-STORM FW overpack. The steel

and concrete shielding materials in the lid provide additional gamma attenuation to reduce both direct and skyshine radiation. The combination of these shielding materials ensures that the radiation and exposure objectives of 10CFR72.104 and 10CFR72.106 are met.

Steel, lead, and water or Holtite-A [1.2.16] are the principal shielding materials in the HI-TRAC transfer cask. The combination of these three shielding materials ensures that the radiation and exposure objectives of 10CFR72.106 and ALARA are met. The extent and location of shielding in the transfer cask plays an important role in minimizing the personnel doses during loading, handling, and transfer.

The MPC fuel basket structure provides the initial attenuation of gamma and neutron radiation emitted by the radioactive contents. The MPC shell, baseplate, and thick lid provide additional gamma attenuation to reduce direct radiation.

1.2.1.4.1 Neutron Absorber – Metamic HT

Metamic-HT is the designated neutron absorber in the HI-STORM FW MPC baskets. It is also the structural material of the basket. The properties of Metamic-HT and key characteristics, necessary for ensuring nuclear reactivity control, thermal, and structural performance of the basket, are presented below.

(a) Overview

Metamic-HT is a composite of nano-particles of aluminum oxide (alumina) and finely ground boron carbide particles homogeneously dispersed in the metal matrix of pure aluminum produced by an extrusion process that ensures a high level of isotropy. Metamic-HT is the constituent material of all fuel baskets in the MPCs listed in Table 1.0.1. Metamic-HT neutron absorber is a successor to the Metamic (classic) product widely used in dry storage fuel baskets [1.1.3, 1.2.10] and spent fuel storage racks [1.2.11]. Metamic-HT is engineered to possess the necessary mechanical characteristics for structural application in spent nuclear fuel casks. The mechanical properties of Metamic-HT are derived from the strengthening of its aluminum matrix with ultra-fine grained (nano-particle size) alumina (Al_2O_3) particles that anchor the grain boundaries for high temperature strength (the "HT" designation is derived from this characteristic) and high creep resistance. The specific Metamic-HT composition utilized in this FSAR is defined in Table 1.2.2. METAMIC-HT was first certified by the USNRC in 2009 as the sole constituent material for the fuel basket types F-37 and F-32 in the HI-STAR 180 transport package (Docket number 71- 9325) for transporting high burn up and MOX fuel. Subsequently, MPC-68M, a Metamic-HT equipped fuel basket for BWR fuel was certified in the HI-STORM 100 docket (72-1014). All fuel baskets used in HI-STORM FW (Docket # 72-1032), HI-STORM UMAX (Docket number 72-1040) and HI-STORM 180D (71-9367) utilize METAMIC-HT for neutron absorbing and structural functions.

Criticality control in METAMIC-HT equipped MPCs is provided by the coplanar grid work of the Fuel Basket, made entirely of the Metamic-HT extruded panels; and thus the neutron absorber is not attached to the cell walls by a mechanical means. Hence, the locational fixity of the neutron absorber is guaranteed. Because the neutron absorber extends to the entire length of the fuel basket (unlike the basket designs wherein a non-structural neutron absorber covers a portion of the stainless steel walls of the basket), axial movement of the fuel during transport does not have any reactivity consequence to the MPC.

provided in Section 1.5. In accordance with practice of joining metal-matrix composites, Friction Stir Welding (FSW) technique was adopted and qualified by Holtec for welding Metamic-HT. This process yields stronger joint strength on a repeatable basis compared to classical welding methods such as metal inert gas or tungsten inert gas welding. Although the Metamic-HT FSW does not need to be credited to structurally qualify Metamic-HT baskets under the governing loading condition (i.e., the non-mechanistic tip-over accident), the FSW process implemented in the manufacturing of Metamic-HT basket require that the welding procedure and welders are appropriately qualified. This is accomplished by tensile testing of weld coupons (emulating ASME Section IX) to meet the weld strength requirements and conducting radiography to verify soundness of the weld. Welder qualification is accomplished by radiography to verify soundness of the weld. The above procedure qualification protocol, provided in the Metamic-HT Manufacturing Manual [1.2.25], has been established to accord with the unique bonding characteristics of Metamic-HT and to ensure that the required minimum joint strength is realized with full assurance in the production of the fuel baskets.

Section 3.4.4 and 10.1 of this FSAR provide additional information on the structural analysis, reference ASME code, design & fabrication aspects and testing/inspection requirements for Metamic-HT basket welding."

1.2.1.4.2 Neutron Shielding

Neutron shielding in the HI-STORM FW overpack is provided by the thick walls of concrete contained inside the steel vessel and the top lid. Concrete is a shielding material with a long proven history in the nuclear industry. The concrete composition has been specified to ensure its continued integrity under long term temperatures required for SNF storage.

The specification of the HI-STORM FW overpack neutron shielding material is predicated on functional performance criteria. These criteria are:

- Attenuation of neutron radiation to appropriate levels;
- Durability of the shielding material under normal conditions (i.e. under normal condition thermal, chemical, mechanical, and radiation environments);
- Stability of the homogeneous nature of the shielding material matrix;
- Stability of the shielding material in mechanical or thermal accident conditions to the desired performance levels; and
- Predictability of the manufacturing process under adequate procedural control to yield an in-place neutron shield of desired function and uniformity.

Other aspects of a shielding material, such as ease of handling and prior nuclear industry use, are also considered. Final specification of a shield material is a result of optimizing the material properties with respect to the above criteria, along with the design of the shield system, to achieve the desired shielding results.

The HI-TRAC VW transfer cask is equipped with a water jacket or neutron shield cylinder (NSC) to provide radial neutron shielding. The water in the water jacket may be fortified with ethylene glycol

to prevent freezing under low temperature operations [1.2.4]. The NSC neutron shielding is provided by Holtite-A. Information on Holtite-A is provided in Appendix 1.B of the HI-STORM 100 FSAR [1.1.3].

Neutron shielding in the HI-TRAC VW Version V2 transfer cask in the radial direction is provided by Holtite-A within the removable NSC. Holtite-A is a poured-in-place solid borated synthetic neutron-absorbing polymer. Holtite-A contains a nominal B_4C loading as specified in Table 1.2.5. Appendix 1.B of HI-STORM 100 System FSAR [1.1.3] provides the Holtite-A material properties germane to its function as a neutron shield. Holtec has performed confirmatory qualification tests on Holtite-A under the company's QA program.

In the following, a brief summary of the performance characteristics and properties of Holtite-A is provided.

Density

The specific gravity of Holtite-A is specified in Table 1.2.5 and Appendix 1.B of [1.1.3]. To conservatively bound any potential weight loss at the design temperature and any inability to reach the theoretical density, the density is reduced by 4%. The density used for the shielding analysis is specified in Table 1.2.5 and is conservatively assumed to underestimate the shielding capabilities of the neutron shield.

Hydrogen

The weight concentration of hydrogen is specified in Table 1.2.5.

Boron Carbide

Boron carbide is dispersed within Holtite-A in finely dispersed powder form. For the HI-STORM FW System, Holtite-A is specified with a nominal B_4C weight percent listed in Table 1.2.5

Design Temperature

The design temperatures of Holtite-A are provided in Table 1.B.1. of [1.1.3]. The maximum spatial temperatures of Holtite-A under all normal operating conditions must be demonstrated to be below these design temperatures, as applicable.

Thermal Conductivity

The Holtite-A neutron shielding material is stable below the design temperature for the long term and provides excellent shielding properties for neutrons. A conservative, lower bound conductivity is stipulated for use in the thermal analyses of Chapter 4 based on information in the technical literature.

During certain evolutions in the short term handling operations, the MPC may contain water which will supplement neutron shielding.

ducts at the bottom of the overpack and in the lid. The ducts and the annular space between the stored MPC and the HI-STORM FW cavity serve to promote ventilation of air to reject the MPC's decay heat to the environment.

The criticality control features of the HI-STORM FW are designed to maintain the neutron multiplication factor k-effective (including uncertainties and calculational bias) at less than 0.95 under all normal, off-normal, and accident conditions of storage as analyzed in Chapter 6.

1.2.2.2 Sequence of Operations

A summary sequence of loading operations necessary to defuel a spent fuel pool using the HI-STORM FW System (shown with MPC Transfer in the plant's Egress Bay) is shown in a series of diagrams in Figure 1.2.8. The loading sequence underscores the inherent simplicity of the loading evolutions and its compliance with ALARA. A more detailed sequence of steps for loading and handling operations is provided in Chapter 9, aided by illustrative figures, to serve as the guidance document for preparing site-specific implementation procedures.

1.2.3 Cask Contents

This sub-section contains information on the cask contents pursuant to 10 CFR72, paragraphs 72.2(a)(1),(b) and 72.236(a),(c),(h),(m).

The HI-STORM FW System is designed to house both BWR and PWR spent nuclear fuel assemblies. Tables 1.2.1 and 1.2.2 provide key system data and parameters for the MPCs. A description of acceptable fuel assemblies for storage in the MPCs is provided in Section 2.1. This includes fuel assemblies classified as damaged fuel assemblies and fuel debris in accordance with the definitions of these terms in the Glossary. All fuel assemblies, non-fuel hardware, and neutron sources authorized for packaging in the MPCs must meet the fuel specifications provided in Section 2.1. All fuel assemblies classified as damaged fuel or fuel debris must be stored in damaged fuel containers (DFC) or fuel cell storage location equipped with a damaged fuel isolator (DFI) for damaged fuel that can be handled by normal means. Figure 2.1.7 shows a typical DFI.

As shown in Figure 1.2.1a (MPC-37) and Figure 1.2.2 (MPC-89), each storage location is assigned to one of three regions, denoted as Region 1, Region 2, and Region 3 with an associated cell identification number. For example, cell identified as 2-4 is Cell 4 in Region 2. A damaged fuel assembly in a DFC or using a DFI can be stored in the outer peripheral locations of the MPC-37/MPC-32ML and MPC-89 as shown in Figures 2.1.1 and 2.1.2, respectively. The permissible heat loads for each cell, region, and the total canister are given in Tables 1.2.3 and 1.2.4 for MPC-37/MPC-32ML and MPC-89, respectively. The sub-design heat loads for each cell, region and total canister are in Table 4.4.11.

As an alternative to the loading patterns discussed above, fuel storage in the MPC-37 and MPC-89 is permitted to use the heat load patterns shown in Figure 1.2.3 through Figure 1.2.5 (MPC-37) and Figures 1.2.6 and 1.2.7 (MPC-89).

A minor deviation from the prescribed loading pattern in an MPC's permissible contents to allow one slightly thermally-discrepant fuel assembly per quadrant to be loaded as long as the peak cladding temperature for the MPC remains below the ISG-11 Rev 3 requirements is permitted for essential dry storage campaigns to support decommissioning.

TABLE 1.2.1†

KEY SYSTEM DATA FOR HI-STORM FW SYSTEM

ITEM	QUANTITY	NOTES
Types of MPCs†	3	2 for PWR 1 for BWR
MPC storage capacity:	MPC-37	Up to 37 undamaged ZR clad PWR fuel assemblies with or without non-fuel hardware, of classes specified in Table 2.1.1a. Up to 12 damaged fuel containers containing PWR damaged fuel and/or fuel debris may be stored in the locations denoted in Figure 2.1.1a with the remaining basket cells containing undamaged fuel assemblies, up to a total of 37. Alternative damaged fuel patterns are shown in Figures 1.2.3 through 1.2.5.
MPC storage capacity:	MPC-89	Up to 89 undamaged ZR clad BWR fuel assemblies. Up to 16 damaged fuel containers containing BWR damaged fuel and/or fuel debris may be stored in locations denoted in Figure 2.1.2 with the remaining basket cells containing undamaged fuel assemblies, up to a total of 89. Alternative damaged fuel patterns are shown in Figure 1.2.6 and 1.2.7.
MPC storage capacity:	MPC-32ML	Up to 32 undamaged ZR clad PWR fuel assemblies, of classes specified in Table 2.1.1b. Up to 8 damaged fuel containers containing PWR damaged fuel and/or fuel debris may be stored in the locations denoted in Figure 2.1.1b with the remaining basket cells containing undamaged fuel assemblies, up to a total of 32.

† Damaged fuel assemblies which can be handled by normal means can be stored in the designated locations for damaged fuel using DFIs or DFCs

† See Chapter 2 for a complete description of authorized cask contents and fuel specifications.

TABLE 1.2.3a MPC-37 HEAT LOAD DATA (See Figure 1.2.1a for regions)					
Number of Regions: 3					
Number of Storage Cells: 37					
Maximum Design Basis Heat Load (kW): 44.09 (Pattern A); 45.0 (Pattern B); (Note 3)					
Region No.	Decay Heat Limit per Cell, kW (Notes 1 and 2)		Number of Cells per Region	Decay Heat Limit per Region, kW	
	Pattern A	Pattern B		Pattern A	Pattern B
1	1.05	1.0	9	9.45	9.0
2	1.70	1.2	12	20.4	14.4
3	0.89	1.35	16	14.24	21.6

Notes:

(1) See Chapter 4 for decay heat limits per cell when vacuum drying high burnup fuel.

(2) Decay heat limit per cell for cells containing damaged fuel or fuel debris is equal to the decay heat limit per cell of the region where the damaged fuel or fuel debris is permitted to be stored.

(3) Alternative heat load patterns for the MPC-37 are included in Table 1.2.3d.

TABLE 1.2.3c Intentionally Deleted

TABLE 1.2.3d ALTERNATIVE LOADING PATTERNS FOR THE MPC-37				
MPC Type		Permissible Heat Load Per Storage Cell		Maximum Heat Load, kW
MPC-37	Short Fuel (Note 1)	Undamaged and Damaged	Figure 1.2.3a	37.4
		Undamaged and Damaged	Figure 1.2.3b	34.4
		Undamaged, Damaged, and/or Fuel Debris	Figure 1.2.3c	34.4
	Standard Fuel (Note 1)	Undamaged and Damaged	Figure 1.2.4a	39.95
		Undamaged and Damaged	Figure 1.2.4b	36.65
		Undamaged, Damaged, and/or Fuel Debris	Figure 1.2.4c	36.65
	Long Fuel (Note 1)	Undamaged and Damaged	Figure 1.2.5a	44.85
		Undamaged and Damaged	Figure 1.2.5b	40.95
		Undamaged, Damaged, and/or Fuel Debris	Figure 1.2.5c	40.95

Notes:

1. See Table 1.2.10 for fuel length data.

TABLE 1.2.4a MPC-89 HEAT LOAD DATA (See Figure 1.2.2 for regions)			
Number of Regions: 3			
Number of Storage Cells: 89			
Maximum Design Basis Heat Load: 46.36 kW (Note 3)			
Region No.	Decay Heat Limit per Cell, kW (Notes 1 and 2)	Number of Cells per Region	Decay Heat Limit per Region, kW
1	0.44	9	3.96
2	0.62	40	24.80
3	0.44	40	17.60

Note:

(1) See Chapter 4 for decay heat limits per cell when loading high burnup fuel and using vacuum drying of the MPC.

(2) Decay heat limit per cell for cells containing damaged fuel or fuel debris is equal to the decay heat limit per cell of the region where the damaged fuel or fuel debris is permitted to be stored.

(3) Alternative heat load patterns for the MPC-89 are included in Table 1.2.4b.

TABLE 1.2.4b ALTERNATIVE LOADING PATTERNS FOR THE MPC-89			
MPC Type	Permissible Heat Load Per Storage Cell		Maximum Heat Load, kW
MPC-89	Undamaged, Damaged, and/or Fuel Debris	Figure 1.2.6a	46.2
		Figure 1.2.6b	44.92
		Figure 1.2.7a	46.14
		Figure 1.2.7b	44.98

TABLE 1.2.5 CRITICALITY AND SHIELDING SIGNIFICANT SYSTEM DATA		
Item	**Property**	**Value**
Metamic-HT Neutron Absorber	Nominal Thickness (mm)	10 (MPC-89) 15 (MPC-37) 15 (MPC-32ML)
	Minimum B_4C Weight %	10 (MPC-89) 10 (MPC-37) 10 (MPC-32ML)
Concrete in HI-STORM FW overpack body and lid	Installed Nominal Density (lb/ft^3)	150 (reference) 200 (maximum)
Holtite-A	Specific gravity (g/cm^3)	1.68
	Density (g/cm^3)	1.61
	Hydrogen Content (weight percent)	5.92
	B_4C content (weight percent)	1.0

TABLE 1.2.8b

[Withheld in accordance with 10 CFR 2.390]

TABLE 1.2.10 PWR FUEL LENGTH CATEGORIES	
Category	Length Range
Short Fuel	128 inches ≤ L < 144 inches
Standard Fuel	144 inches ≤ L < 168 inches
Long Fuel	L ≥ 168 inches

Notes:

1. “L” means "nominal active fuel length". The nominal, unirradiated active fuel length of the PWR fuel assembly is used to designate it as “short”, “standard” and “long”.

		0.45 (D/F)	0.45	0.45 (D/F)		
	0.45 (D/F)	3.2	0.5	3.2	0.45 (D/F)	
0.6 (D/F)	2.4	0.5	0.6	0.5	2.4	0.6 (D/F)
0.6	0.5	0.6	0.5	0.6	0.5	0.6
0.6 (D/F)	2.4	0.5	0.6	0.5	2.4	0.6 (D/F)
	0.45 (D/F)	3.2	0.5	3.2	0.45 (D/F)	
		0.45 (D/F)	0.45	0.45 (D/F)		

Figure 1.2.3a:
Loading Pattern 37C1 for MPC-37 Containing Undamaged and Damaged Fuel in DFCs/DFIs, and/or Fuel Debris in DFC "Short" Fuel per Cell Heat Load Limits

(**All Storage cell heat loads are in kW**, Undamaged Fuel, or Damaged Fuel in DFCs and/or using DFIs, and/or Fuel Debris in a DFC may be stored in cells denoted by "D/F".)

		0.45	0.45	0.45		
	0.45	3.2 (D)	Empty	3.2 (D)	0.45	
0.6	2.4 (D)	Empty	0.6	Empty	2.4 (D)	0.6
0.6	0.5	0.6	0.5	0.6	0.5	0.6
0.6	2.4 (D)	Empty	0.6	Empty	2.4 (D)	0.6
	0.45	3.2 (D)	Empty	3.2 (D)	0.45	
		0.45	0.45	0.45		

Figure 1.2.3b:
Loading Pattern 37C2 for MPC-37 Containing Undamaged and Damaged Fuel in DFC/DFI/, “Short” Fuel per Cell Heat Load Limits

(**All storage cell heat loads are in kW**, Undamaged Fuel or Damaged Fuel in a DFC and/or using DFIs may be stored in cells denoted by “D.” Cells denoted as “Empty” must remain empty regardless of the contents of the adjacent cell)

		0.45	0.45	0.45		
	0.45	3.2 (D/F)	Empty	3.2 (D/F)	0.45	
0.6	2.4	Empty	0.6	Empty	2.4	0.6
0.6	0.5	0.6	0.5	0.6	0.5	0.6
0.6	2.4	Empty	0.6	Empty	2.4	0.6
	0.45	3.2 (D/F)	Empty	3.2 (D/F)	0.45	
		0.45	0.45	0.45		

Figure 1.2.3c:
Loading Pattern 37C3 for MPC-37 Containing Undamaged and Damaged Fuel in DFC/DFI, and/or Fuel Debris in DFC, “Short” Fuel per Cell Heat Load Limits

(**All Storage cell heat loads are in kW**, Undamaged Fuel, or Damaged Fuel in DFCs and/or using DFIs, and/or Fuel Debris in a DFC may be stored in cells denoted by “D/F.” Cells denoted as “Empty” must remain empty regardless of the contents of the adjacent cell)

		0.55 (D/F)	0.55	0.55 (D/F)		
	0.55 (D/F)	3.2	0.55	3.2	0.55 (D/F)	
0.75 (D/F)	2.4	0.55	0.65	0.55	2.4	0.75 (D/F)
0.75	0.55	0.65	0.55	0.65	0.55	0.75
0.75 (D/F)	2.4	0.55	0.65	0.55	2.4	0.75 (D/F)
	0.55 (D/F)	3.2	0.55	3.2	0.55 (D/F)	
		0.55 (D/F)	0.55	0.55 (D/F)		

Figure 1.2.4a:
Loading Pattern 37D1 for MPC-37 Containing Undamaged and Damaged Fuel in DFCs/DFIs, and/or Fuel Debris in DFCs, “Standard” Fuel per Cell Heat Load Limits

(**All Storage cell heat loads are in kW,** Undamaged Fuel, or Damaged Fuel in DFCs and/or using DFIs, and/or Fuel Debris in a DFC may be stored in cells denoted by “D/F.)

		0.55	0.55	0.55		
	0.55	3.2 (D)	Empty	3.2 (D)	0.55	
0.75	2.4 (D)	Empty	0.65	Empty	2.4 (D)	0.75
0.75	0.55	0.65	0.55	0.65	0.55	0.75
0.75	2.4 (D)	Empty	0.65	Empty	2.4 (D)	0.75
	0.55	3.2 (D)	Empty	3.2 (D)	0.55	
		0.55	0.55	0.55		

Figure 1.2.4b:
Loading Pattern 37D2 for MPC-37 Containing Undamaged and Damaged Fuel in DFCs/DFIs, “Standard” Fuel per Cell Heat Load Limits

(**All storage cell heat loads are in kW**, “D” Undamaged Fuel or Damaged Fuel in a DFC and/or using DFIs may be stored in cells denoted by “D.” Cells denoted as “Empty” must remain empty regardless of the contents of the adjacent cell)

		0.55	0.55	0.55		
	0.55	3.2 (D/F)	Empty	3.2 (D/F)	0.55	
0.75	2.4	Empty	0.65	Empty	2.4	0.75
0.75	0.55	0.65	0.55	0.65	0.55	0.75
0.75	2.4	Empty	0.65	Empty	2.4	0.75
	0.55	3.2 (D/F)	Empty	3.2 (D/F)	0.55	
		0.55	0.55	0.55		

Figure 1.2.4c:
Loading Pattern 37D3 for MPC-37 Containing Undamaged and Damaged Fuel in DFCs/DFIs, and/or Fuel Debris in DFC, “Standard” Fuel per Cell Heat Load Limits

(**All Storage cell heat loads are in kW**, Undamaged Fuel, or Damaged Fuel in DFCs and/or using DFIs, and/or Fuel Debris in a DFC may be stored in cells denoted by “D/F.” Cells denoted as “Empty” must remain empty regardless of the contents of the adjacent cell.)

		0.65 (D/F)	0.65	0.65 (D/F)		
	0.65 (D/F)	3.5	0.65	3.5	0.65 (D/F)	
0.85 (D/F)	2.6	0.65	0.75	0.65	2.6	0.85 (D/F)
0.85	0.65	0.75	0.65	0.75	0.65	0.85
0.85 (D/F)	2.6	0.65	0.75	0.65	2.6	0.85 (D/F)
	0.65 (D/F)	3.5	0.65	3.5	0.65 (D/F)	
		0.65 (D/F)	0.65	0.65 (D/F)		

Figure 1.2.5a:
Loading Pattern 37E1 for MPC-37 Loading Pattern for MPCs Containing Undamaged and Damaged Fuel in DFCs/DFIs, and/or Fuel Debris in DFCs, “Long” Fuel per Cell Heat Load Limits

(**All Storage cell heat loads are in kW**, Undamaged Fuel, or Damaged Fuel in DFCs and/or using DFIs, and/or Fuel Debris in a DFC may be stored in cells denoted by “D/F.”)

		0.65	0.65	0.65		
	0.65	3.5 (D)	Empty	3.5 (D)	0.65	
0.85	2.6 (D)	Empty	0.75	Empty	2.6 (D)	0.85
0.85	0.65	0.75	0.65	0.75	0.65	0.85
0.85	2.6 (D)	Empty	0.75	Empty	2.6 (D)	0.85
	0.65	3.5 (D)	Empty	3.5 (D)	0.65	
		0.65	0.65	0.65		

Figure 1.2.5b:
Loading Pattern 37E2 for MPC-37 Containing Undamaged and Damaged Fuel in DFCs/DFIs, “Long” Fuel per Cell Heat Load Limits

(**All storage cell heat loads are in kW**, “D” means Undamaged Fuel or Damaged Fuel in a DFC and/or using DFIs may be stored in cells denoted by “D.” Cells denoted as “Empty” must remain empty regardless of the contents of the adjacent cell)

		0.65	0.65	0.65		
	0.65	3.5 (D/F)	Empty	3.5 (D/F)	0.65	
0.85	2.6	Empty	0.75	Empty	2.6	0.85
0.85	0.65	0.75	0.65	0.75	0.65	0.85
0.85	2.6	Empty	0.75	Empty	2.6	0.85
	0.65	3.5 (D/F)	Empty	3.5 (D/F)	0.65	
		0.65	0.65	0.65		

Figure 1.2.5c:
Loading Pattern 37E3 for MPC-37 Containing Undamaged and Damaged Fuel in DFCs/DFIs, and/or Fuel Debris in DFC, “Long” Fuel per Cell Heat Load Limits

(**All Storage cell heat loads are in kW**, Undamaged Fuel, or Damaged Fuel in DFCs and/or using DFIs, and/or Fuel Debris in a DFC may be stored in cells denoted by “D/F.” Cells denoted as “Empty” must remain empty regardless of the contents of the adjacent cell)

				0.25 (D/F)	0.25	0.25 (D/F)				
		0.25 (D/F)	0.25	0.25	1.45	0.25	0.25	0.25 (D/F)		
	0.25 (D/F)	0.25	1.45	0.9	0.9	0.9	1.45	0.25	0.25 (D/F)	
	0.25	1.45	0.32	0.32	0.32	0.32	0.32	1.45	0.25	
0.25 (D/F)	0.25	0.9	0.32	0.32	0.32	0.32	0.32	0.9	0.25	0.25 (D/F)
0.25	1.45	0.9	0.32	0.32	0.32	0.32	0.32	0.9	1.45	0.25
0.25 (D/F)	0.25	0.9	0.32	0.32	0.32	0.32	0.32	0.9	0.25	0.25 (D/F)
	0.25	1.45	0.32	0.32	0.32	0.32	0.32	1.45	0.25	
	0.25 (D/F)	0.25	1.45	0.9	0.9	0.9	1.45	0.25	0.25 (D/F)	
		0.25 (D/F)	0.25	0.25	1.45	0.25	0.25	0.25 (D/F)		
				0.25 (D/F)	0.25	0.25 (D/F)				

Figure 1.2.6a:
Loading Pattern 89A1 for MPC-89 Containing Undamaged and Damaged Fuel in DFCs/DFIs, and/or Fuel Debris in DFC, per Cell Heat Load Limits

(**All Storage cell heat loads are in kW,** Undamaged Fuel, or Damaged Fuel in DFCs and/or using DFIs, and/or Fuel Debris in a DFC may be stored in cells denoted by "D/F.")

				0.25	0.25	0.25				
		0.25	0.25	0.25	1.45 (D/F)	0.25	0.25	0.25		
	0.25	0.25	1.45 (D/F)	0.9	0.9	0.9	1.45 (D/F)	0.25	0.25	
	0.25	1.45 (D/F)	Empty	0.32	0.32	0.32	Empty	1.45 (D/F)	0.25	
0.25	0.25	0.9	0.32	0.32	0.32	0.32	0.32	0.9	0.25	0.25
0.25	1.45 (D/F)	0.9	0.32	0.32	0.32	0.32	0.32	0.9	1.45 (D/F)	0.25
0.25	0.25	0.9	0.32	0.32	0.32	0.32	0.32	0.9	0.25	0.25
	0.25	1.45 (D/F)	Empty	0.32	0.32	0.32	Empty	1.45 (D/F)	0.25	
	0.25	0.25	1.45 (D/F)	0.9	0.9	0.9	1.45 (D/F)	0.25	0.25	
		0.25	0.25	0.25	1.45 (D/F)	0.25	0.25	0.25		
				0.25	0.25	0.25				

Figure 1.2.6b:

Loading Pattern 89A2 for MPC-89 Containing Undamaged and Damaged Fuel in DFCs/DFIs, and/or Fuel Debris in DFCs, per Cell Heat Load Limits

(**All Storage cell heat loads are in kW,** Undamaged Fuel, or Damaged Fuel in DFCs and/or using DFIs, and/or Fuel Debris in a DFC may be stored in cells denoted by “D/F.” Cells denoted as “Empty” must remain empty regardless of the contents of the adjacent cell.)

				0.11 (D/F)	0.47	0.11 (D/F)				
		0.19 (D/F)	0.23	0.68	1.46	0.68	0.23	0.19 (D/F)		
	0.25 (D/F)	0.27	1.42	1.05	0.40	1.05	1.42	0.27	0.25 (D/F)	
	0.23	1.44	0.29	0.31	0.33	0.31	0.29	1.44	0.23	
0.10 (D/F)	0.71	0.72	0.36	0.28	0.21	0.28	0.36	0.72	0.71	0.10 (D/F)
0.40	1.46	0.47	0.33	0.21	0.10	0.21	0.33	0.47	1.46	0.40
0.10 (D/F)	0.71	0.72	0.36	0.28	0.21	0.28	0.36	0.72	0.71	0.10 (D/F)
	0.23	1.44	0.29	0.31	0.33	0.31	0.29	1.44	0.23	
	0.25 (D/F)	0.27	1.42	1.05	0.40	1.05	1.42	0.27	0.25 (D/F)	
		0.19 (D/F)	0.23	0.68	1.46	0.68	0.23	0.19 (D/F)		
				0.11 (D/F)	0.47	0.11 (D/F)				

Figure 1.2.7a:
Loading Pattern 89B1 for MPC-89 Containing Undamaged and Damaged Fuel in DFCs/DFIs, and/or Fuel Debris in DFC, per cell Heat Load Limits

(**All Storage cell heat loads are in kW**, Undamaged Fuel, or Damaged Fuel in DFCs and/or using DFIs, and/or Fuel Debris in a DFC may be stored in cells denoted by “D/F.”

				0.11	0.47	0.11				
		0.19	0.23	0.68	1.46 (D/F)	0.68	0.23	0.19		
	0.25	0.27	1.42 (D/F)	1.05	0.40	1.05	1.42 (D/F)	0.27	0.25	
	0.23	1.44 (D/F)	Empty	0.31	0.33	0.31	Empty	1.44 (D/F)	0.23	
0.10	0.71	0.72	0.36	0.28	0.21	0.28	0.36	0.72	0.71	0.10
0.40	1.46 (D/F)	0.47	0.33	0.21	0.10	0.21	0.33	0.47	1.46 (D/F)	0.40
0.10	0.71	0.72	0.36	0.28	0.21	0.28	0.36	0.72	0.71	0.10
	0.23	1.44 (D/F)	Empty	0.31	0.33	0.31	Empty	1.44 (D/F)	0.23	
	0.25	0.27	1.42 (D/F)	1.05	0.40	1.05	1.42 (D/F)	0.27	0.25	
		0.19	0.23	0.68	1.46 (D/F)	0.68	0.23	0.19		
				0.11	0.47	0.11				

Figure 1.2.7b:
Loading Pattern 89B2 for MPC-89 Containing Undamaged and Damaged Fuel in DFCs/DFIs, and/or Fuel Debris in DFC, per Cell Heat Load Limits

(**All Storage cell heat loads are in kW**, Undamaged Fuel, or Damaged Fuel in DFCs and/or using DFIs, and/or Fuel Debris in a DFC may be stored in cells denoted by “D/F.” Cells denoted as “Empty” must remain empty regardless of the contents of the adjacent cell.)

Figure 1.2.7c: Figure Deleted

1. MPC Placed in HI-TRAC	2. HI-TRAC Placement in the spent fuel pool
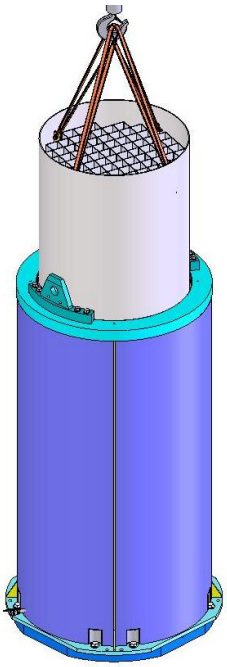	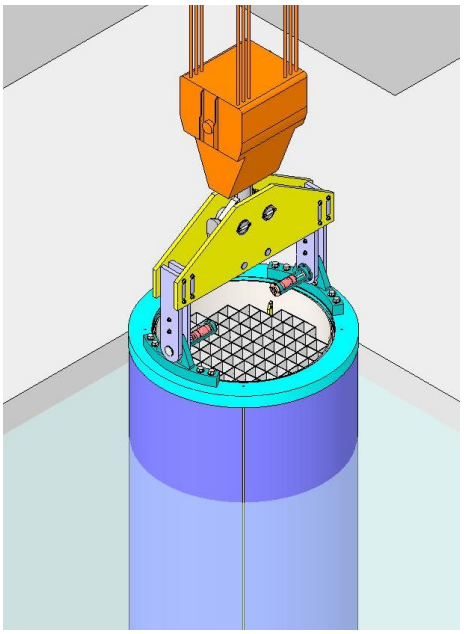
3. Fuel Loading into the MPC	4. HI-TRAC/MPC Removal from the spent fuel pool
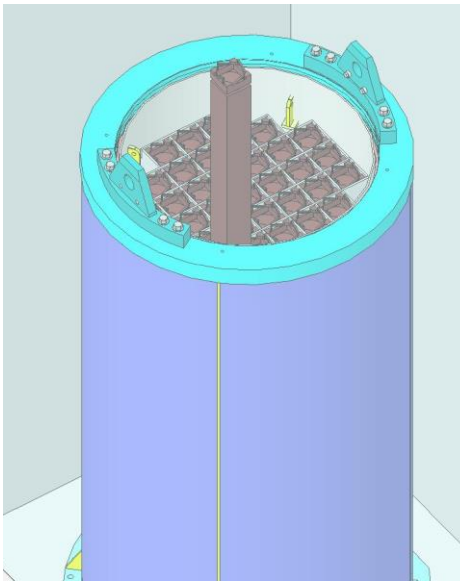	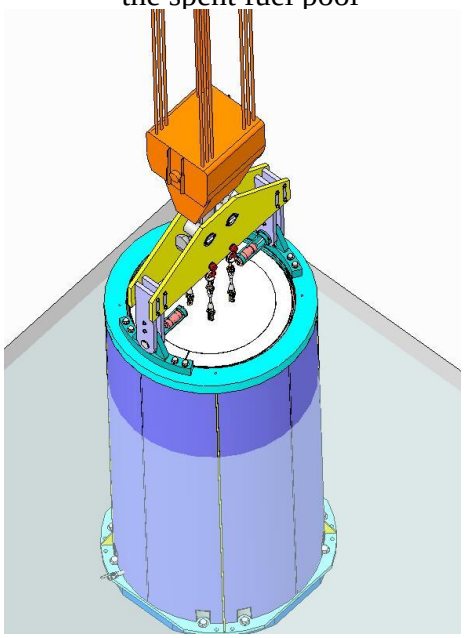

FIGURE 1.2.8: SUMMARY OF TYPICAL LOADING OPERATIONS
(LOADING OPERATIONS WILL BE ADJUSTED FOR HI-TRAC VW VERSION V2 AS ILLUSTRATED IN CHAPTER 9, FIGURES 9.2.6B AND 9.2.7B)

5. MPC Closure Operations (Lid to Shell Welding)	6. MPC Draining, Drying and Backfill
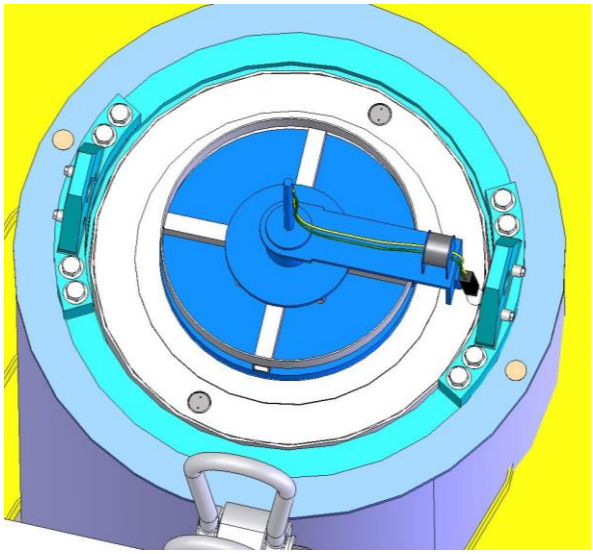	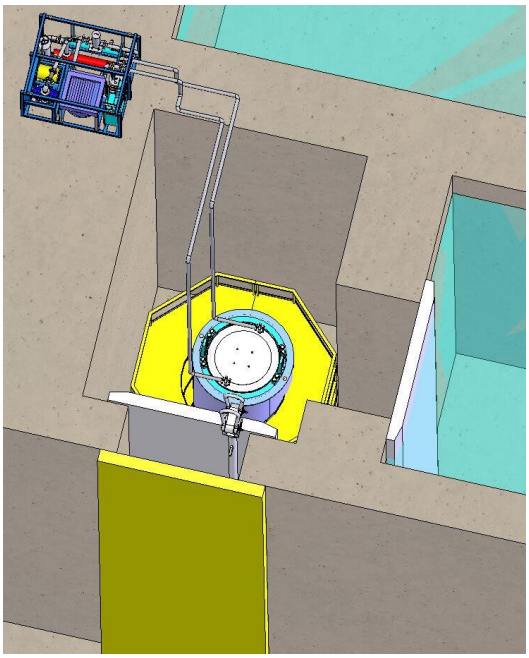
7. System Stackup and MPC Transfer Operations	8. HI-STORM Movement to the ISFSI
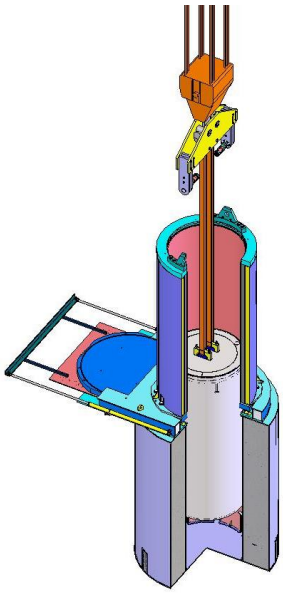	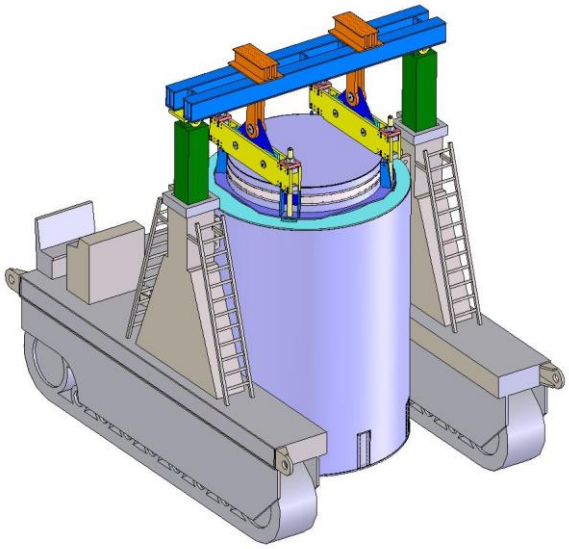

FIGURE 1.2.8 (CONTINUED): SUMMARY OF TYPICAL LOADING OPERATIONS

FIGURE 1.2.9 DELETED

1.5 DRAWINGS

The following HI-STORM FW System drawings are provided on subsequent pages in this section to fulfill the requirements in 10 CFR 72.2(a)(1),(b) and 72.230(a):

Drawing No.	Title	Revision
6494	HI-STORM FW BODY	12
6508	HI-STORM LID ASSEMBLY	8
6514	HI-TRAC VW – MPC-37	9
6799	HI-TRAC VW – MPC-89	9
11006	HI-TRAC VW Version V	0
11283	HI-TRAC VW Version V2	2
6505	MPC-37 ENCLOSURE VESSEL	13
6506	MPC-37 FUEL BASKET	12
6512	MPC-89 ENCLOSURE VESSEL	15
6507	MPC-89 FUEL BASKET	11
10464	MPC-32ML ENCLOSURE VESSEL	1
10457	MPC-32ML FUEL BASKET	0

Notes:

1. The HI-TRAC VW for MPC-37 is the designated HI-TRAC for all PWR MPCs (MPC-37 and MPC-32ML).

[1.2.7] "Metamic-HT Manufacturing Manual", Nanotec Metals Division, Holtec International, Latest Revision (Holtec Proprietary).

[1.2.8] Metamic-HT Purchasing Specification", Holtec Document ID PS-11, Latest Revision, (Holtec Proprietary).

[1.2.9] Sampling Procedures and Tables for Inspection by Attributes", Military Standard MIL-STD-105E, (10/5/1989).

[1.2.10] USNRC Docket No. 72-1004 SER on NUHOMS 61BT (2002).

[1.2.11] Safety Evaluation by the Office of Nuclear Reactor Regulation Related to Holtec International Report HI-2022871 Regarding Use of Metamic in Fuel Pool Applications," Facility Operating License Nos. DPR-51 and NPF-6, Entergy Operations, Inc., docket No. 50-313 and 50-368, USNRC, June 2003.

[1.2.12] Dynamic Mechanical Response and Microstructural Evolution of High Strength Aluminum-Scandium (Al-Sc) Alloy, by W.S. Lee and T.H. Chen, Materials Transactions, Vol. 47, No. 2(2006), pp 355-363, Japan Institute for metals.

[1.2.13] Turner, S.E., "Reactivity Effects of Streaming Between Discrete Boron Carbide Particles in Neutron Absorber Panels for Storage or Transport of Spent Nuclear Fuel," Nuclear Science and Engineering, Vol. 151, Nov. 2005, pp. 344-347.

[1.2.14] Natrella, M.G., "Experimental Statistics", National Bureau of Standards Handbook 91, National Bureau of Standards, Washington, DC, 1963.

[1.2.15] Technical Memo TM-141R1, NRC's Guidance on Design of Lifting Systems and Special Lifting Devices Used in Holtec's Used Fuel Management Program, dated 4/15/15.

[1.2.16] Holtite A: Development History and Thermal Performance Data", Holtec Report HI-2002396, Latest Revision, Holtec Proprietary.

APPENDIX 1.A: ALLOY X DESCRIPTION

1.A.1 Introduction

Alloy X is used within this licensing application to designate a group of stainless steel alloys. Alloy X can be any one of the following alloys:

- Type 316
- Type 316LN
- Type 304
- Type 304LN
- Duplex Stainless Alloy S31803 [1.A.3]

Qualification of structures made of Alloy X is accomplished by using the least favorable mechanical and thermal properties of the entire group for all MPC mechanical, structural, neutronic, radiological, and thermal conditions. The Alloy X approach is conservative because no matter which material is ultimately utilized, the Alloy X approach guarantees that the performance of the MPC will meet or exceed the analytical predictions.

Duplex stainless steels (DSS) are sensitive to the manufacturing processes employed in welding operations. Control of microstructure stability plays a vital role. The intermetallic microstructure is a complex function of the attendant parameters. For example, Cr and Mo promote ferrite and intermetallic phases, whereas N and Ni promote austenite.

During welding the balance between the ferritic and austenitic phases may be disturbed due to ferritization at high temperatures associated with welding operations. Ferrite content over 70% will lead to lower ductility and reduced corrosion resistance. Coarse ferritic grains are harmful for DSS toughness besides of impairing the austenite reformation at the heat affected zone (HAZ) [1.A.5]. The best metallurgical condition for welding is achieved by the most rapid quenching from the annealing temperature that produces a fine grained DSS structure with the required ferrite content (less than 70%).

Besides the austenite-ferrite phase balance, the second major concern with duplex steels and their chemical composition is the formation of detrimental intermetallic phases, precipitating preferentially in the ferrite, at elevated temperatures in the range of approximately 600 - 1750°F reaching an uncertain state of fragility at 887°F [1.A.4] and above. The mechanical (toughness) and corrosion properties of the weld and HAZ are deteriorated due to the presence of intermetallic phases.

Welding of DSS is associated with problems in the HAZ which can be loss of corrosion, toughness, or post-weld cracking. The heat input and cooling rates in welding are important as they control ferrite to austenite transformation. Exceedingly low heat input may result in fusion zones and HAZ

which are excessively ferritic (above 70%) [1.A.6]. Exceedingly high heat input increases the danger of forming intermetallic phases [1.A.6]. In both cases the impact toughness and corrosion resistance of the DSS will be seriously affected. Hence, heat input must be 0.6 – 2.6 kJ/mm to retain the phase balance, limit the width of the HAZ, and obtain a sigma phase free product [1.A.5]. Further, cooling rate from the solution annealing temperature must exceed 0.3°C/s to avoid sigma phase and satisfy the generally accepted toughness requirements [1.A.8]. The maximum interpass temperature is limited to 150°C (302°F) [1.A.6].

DSS have chloride stress corrosion cracking (CSCC) resistance significantly greater than that of the austenitic stainless steels, but they are not completely immune. Experimental results indicate that DSS is prone to stress corrosion cracking at temperatures above 100°C [1.A.9]. Poor welding practice, a low pH, presence of Hydrogen in welds, and/or high ferrite (>70%) can contribute to failures at temperatures below 100°C.

Holtec will make sure that this material shall be used *only* if the metal temperature of the MPC shell can be assured to remain below the limit in Table 1.A.6 under all *normal operating* modes [1.A.3]. Likewise, under short term and accident conditions, such as the "inlet duct blockage" scenario, the maximum metal temperature of duplex stainless steel must be held below the limit in Table 1.A.6.

To confirm that the required properties are achieved in production, Holtec will implement a test program to ensure that the weldments are tested for the absence of detrimental intermetallic phases. The test program will comply with ASTM A923 and will use metallographic examination, impact testing and corrosion testing to demonstrate the absence of such detrimental phases. The test will be intended to determine the presence or absence of intermetallic phase to the extent that it is detrimental to the toughness and corrosion resistance of the material. The test *shall* be implemented to products during weld procedure qualification as well as during fabrication which will provide the assurance that the weldments are *free* from detrimental intermetallic phases, and *provide* the required corrosion resistance and fracture toughness [1.A.7].

For other stainless steels listed as members of Alloy X above, the design temperature limits in Table 2.2.3 remain unmodified.

This appendix defines the least favorable material properties of Alloy X.

1.A.2 Common Material Properties

Several material properties do not vary significantly from one Alloy X constituent to the next. These common material properties are as follows:

- density
- specific heat
- Young's Modulus (Modulus of Elasticity)
- Poisson's Ratio

The comparative values for Modulus of Elasticity at different temperatures are provided in Table 1.A.7. The values utilized for this licensing application are provided in their appropriate chapters.

1.A.3 Least Favorable Material Properties

The following material properties vary between the Alloy X constituents:

- Design Stress Intensity (S_m)
- Tensile (Ultimate) Strength (S_u)
- Yield Strength (S_y)
- Coefficient of Thermal Expansion (α)
- Coefficient of Thermal Conductivity (k)

Each of these material properties are provided in the ASME Code Section II [1.A.10]. Tables 1.A.1 through 1.A.5 provide the ASME Code values for each constituent of Alloy X along with the least favorable value utilized in this licensing application. The ASME Code only provides values from -20°F. The lower bound service temperature of the MPC is -40°F, which is below -20°F. Most of the above-mentioned properties improve as the temperature drops. For this reason, the values at the lowest design temperature for the HI-STORM FW System have been assumed to be equal to the lowest value stated in the ASME Code. The lone exceptions are the coefficient of thermal expansion and thermal conductivity. As they decrease with the decreasing temperature, their values for -40°F are linearly extrapolated from the 70°F value with the slope based on data from 70°F to 100°F.

The Alloy X material properties are the minimum values of the group for the design stress intensity, tensile strength, yield strength, and coefficient of thermal conductivity. Using minimum values of design stress intensity is conservative because lower design stress intensities lead to lower allowables that are based on design stress intensity. Similarly, using minimum values of tensile strength and yield strength is conservative because lower values of tensile strength and yield strength lead to lower allowables that are based on tensile strength and yield strength. When compared to calculated values, these lower allowables result in factors of safety that are conservative for any of the constituent materials of Alloy X. Using the minimum value of thermal conductivity has the effect of reducing the heat rejection rate from the canister, which is conservative. The maximum and minimum values are used for the coefficient of thermal expansion of Alloy X. The maximum and minimum coefficients of thermal expansion are used as appropriate in this submittal to support a conservative safety evaluation. However, for any internal interference assessment the actual values of coefficients of thermal expansion from the ASME Code or Table 1.A.4 will be used.

1.A.4 References

[1.A.1] ASME Boiler & Pressure Vessel Code, Section II, Materials (2007).
[1.A.2] ASME Boiler & Pressure Vessel Code Section II, 2013 ed. with Addenda through 2014
[1.A.3] ASME Code Case N-635-1 (2013)
[1.A.4] C. Örnek, D. Engelberg, S. Lyon and T. Ladwein, "Effect of “475°C Embrittlement” on the Corrosion Behaviour of Grade 2205 Duplex Stainless Steel Investigated Using Local Probing Techiques," *Corrosion Management Magazine*, no. 115, pp. 9-11, 2013.
[1.A.5] C.R. Xavier, H.G. Delgado Jr., J.A de Castro, “An Experimental and Numerical Approach for the Welding Effects on the Duplex Stainless Steel Microstructure” – Materials Research Vol. 18(3) pp. 489-502, 2015.
[1.A.6] “Practical guidelines for Fabrication of Duplex Stainless Steels” – International Molybdenum Association, 2014.
[1.A.7] ASTM A923-14, “Standard Test Methods for Detecting Detrimental Intermetallic Phase in Duplex Austenitic/Ferritic Stainless Steels” – W Conshohocken, PA, ASTM International 2014.
[1.A.8] J. Charles, “Duplex Stainless Steels, A Review After DSS ’07 held in GRADO” – Steel Research International Vol. 79(6) pp. 455-465, 2008.
[1.A.9] A. Leonard, “Review of external stress corrosion cracking of 22%Cr duplex stainless steel, Phase 1 – Operational data acquisition,” – HSE RR 129, Her Majesty's Stationery Office, Norwich, UK, 2003.
[1.A.10] ASME Boiler & Pressure Vessel Code Section II, Part D, 2015.

TABLE 1.A.1

DESIGN STRESS INTENSITY (S_m) vs. TEMPERATURE FOR THE ALLOY-X MATERIALS

Temp. (°F)	Type 304	Type 304LN	Type 316	Type 316LN	Duplex Stainless Steel S31803 [Notes 3 and 4]	Alloy X (minimum of constituent values)
-40	20.0	20.0	20.0	20.0	30.0	20.0
100	20.0	20.0	20.0	20.0	30.0	20.0
200	20.0	20.0	20.0	20.0	30.0	20.0
300	20.0	20.0	20.0	20.0	28.9	20.0
400	18.6	18.6	19.3	18.9	27.8	18.6
500	17.5	17.5	18.0	17.5	27.2	17.5
600	16.6	16.6	17.0	16.5	26.9	16.5
650	16.2	16.2	16.6	16.0	-	16.0
700	15.8	15.8	16.3	15.6	-	15.6
750	15.5	15.5	16.1	15.2	-	15.2
800	15.2	15.2	15.9	14.8	-	14.8

Notes:

1. Source: Table 2A on pages 308, 312, 316, and 320 of [1.A.1] for Type 316/316LN/304/304LN.
2. Units of design stress intensity values are ksi.
3. Design stress intensity values have been derived based on the basis established in Mandatory Appendix 2 page 924 and 925 which essentially states that the stress intensity value at temperature is the minimum of one-third of the tensile strength or two-thirds of the yield strength at temperature.
4. Maximum temperature of use for duplex stainless steel under both long term storage and short term / accident conditions is noted in Table 1.A.6.

TABLE 1.A.2

TENSILE STRENGTH (S_u) vs. TEMPERATURE OF ALLOY-X MATERIALS

Temp. (°F)	Type 304	Type 304LN	Type 316	Type 316LN	Duplex Stainless Steel S31803 [Note 4]	Alloy X (minimum of constituent values)
-40	75.0 (70.0)	75.0 (70.0)	75.0 (70.0)	75.0 (70.0)	90 (90)	75.0 (70.0)
100	75.0 (70.0)	75.0 (70.0)	75.0 (70.0)	75.0 (70.0)	90 (90)	75.0 (70.0)
200	71.0 (66.3)	71.0 (66.3)	75.0 (70.0)	75.0 (70.0)	90 (90)	71.0 (66.3)
300	66.2 (61.8)	66.2 (61.8)	72.9 (68.0)	70.7 (66.0)	86.8 (86.8)	66.2 (61.8)
400	64.0 (59.7)	64.0 (59.7)	71.9 (67.1)	67.1 (62.6)	83.5 (83.5)	64.0 (59.7)
500	63.4 (59.2)	63.4 (59.2)	71.8 (67.0)	64.6 (60.3)	81.6 (81.6)	63.4 (59.2)
600	63.4 (59.2)	63.4 (59.2)	71.8 (67.0)	63.3 (59.0)	80.7 (80.7)	63.3 (59.0)
650	63.4 (59.2)	63.4 (59.2)	71.8 (67.0)	62.8 (58.6)	-	62.8 (58.6)
700	63.4 (59.2)	63.4 (59.2)	71.8 (67.0)	62.4 (58.3)	-	62.4 (58.3)
750	63.3 (59.0)	63.3 (59.0)	71.5 (66.7)	62.1 (57.9)	-	62.1 (57.9)
800	62.8 (58.6)	62.8 (58.6)	70.8 (66.1)	61.7 (57.6)	-	61.7 (57.6)

Notes:

1. Source: Table U on pages 514, 516, 518, 520, and 522 of [1.A.1] for Type 304/304LN/316/316LN.
2. Units of tensile strength are ksi.
3. The ultimate stress of Alloy X is dependent on the product form of the material (i.e., forging vs. plate). Values in parentheses are based on SA-336 forged materials (type F304, F304LN, F316, and F316LN) or SA-182 forged material (S31803), which are used solely for the one-piece construction MPC lids. All other values correspond to SA-240 plate material.
4. Source: Table U on page 521 of [1.A.10] for DSS UNS S31803.
5. Maximum temperature of use for duplex stainless steel under both long term storage and short term / accident conditions is noted in Table 1.A.6.

TABLE 1.A.3

YIELD STRESSES (S_y) vs. TEMPERATURE OF ALLOY-X MATERIALS

Temp. (°F)	Type 304	Type 304LN	Type 316	Type 316LN	Duplex Stainless Steel S31803 [Note 3]	Alloy X (minimum of constituent values)
-40	30.0	30.0	30.0	30.0	65.0 (65.0)	30.0
100	30.0	30.0	30.0	30.0	65.0 (65.0)	30.0
200	25.0	25.0	25.9	25.5	57.8 (57.8)	25.0
300	22.4	22.4	23.4	22.9	53.7 (53.7)	22.4
400	20.7	20.7	21.4	21.0	51.2 (51.2)	20.7
500	19.4	19.4	20.0	19.5	49.6 (49.6)	19.4
600	18.4	18.4	18.9	18.3	47.9 (47.9)	18.3
650	18.0	18.0	18.5	17.8	-	17.8
700	17.6	17.6	18.2	17.3	-	17.3
750	17.2	17.2	17.9	16.9	-	16.9
800	16.9	16.9	17.7	16.5	-	16.5

Notes:

1. Source: Table Y-1 on pages 634, 638, 646, and 650 of [1.A.1] for Type 304/304LN/316/316LN.
2. Units of yield stress are ksi.
3. Source: Table Y-1 on page 672 and 673 of [1.A.10] for DSS UNS S31803. Values in parentheses are based on SA-182 forged material (S31803) which is used solely for the one-piece construction MPC lids. All other values correspond to SA-240 plate material.
4. Maximum temperature of use for duplex stainless steel under both long term storage and short term / accident conditions is noted in Table 1.A.6.

TABLE 1.A.4

TABLE 1.A.4

COEFFICIENT OF THERMAL EXPANSION
vs. TEMPERATURE OF ALLOY-X MATERIALS

Temp. (°F)	Type 304, 304LN, 316, 316LN (Alloy X Maximum)	Duplex Stainless Steel S31803 [Note 3] (Alloy X Minimum)
-40	--	6.63
100	8.6	7.1
150	8.8	7.3
200	8.9	7.5
250	9.1	7.6
300	9.2	7.8
350	9.4	7.9
400	9.5	8.0
450	9.6	8.1
500	9.7	8.3
550	9.8	8.4
600	9.8	8.4
650	9.9	-
700	10.0	-
750	10.0	-
800	10.1	-
850	10.2	-
900	10.2	-
950	10.3	-
1000	10.3	-
1050	10.4	-
1100	10.4	-

Notes:

1. Source: Group 3 alloys from Table TE-1 on pages 749 and 751 of [1.A.1] for Type 304/304LN/316/316LN.
2. Units of mean coefficient of thermal expansion are in./in./°F x 10^{-6}.
3. Source: Group 2 alloys from Table TE-1 on page 753 of [1.A.10] for SS UNS S31803.
4. Maximum temperature of use for duplex stainless steel under both long term storage and short term / accident conditions is noted in Table 1.A.6.

TABLE 1.A.5

THERMAL CONDUCTIVITY vs. TEMPERATURE OF ALLOY-X MATERIALS

Temp. (°F)	Type 304 and Type 304LN	Type 316 and Type 316LN	Duplex Stainless Steel S31803 [Note 3]	Alloy X (minimum of constituent values)
-40	--	--	7.83	--
70	8.6	8.2	8.2	8.2
100	8.7	8.3	8.3	8.3
150	9.0	8.6	8.6	8.6
200	9.3	8.8	8.8	8.8
250	9.6	9.1	9.1	9.1
300	9.8	9.3	9.3	9.3
350	10.1	9.5	9.5	9.5
400	10.4	9.8	9.8	9.8
450	10.6	10.0	10.0	10.0
500	10.9	10.2	10.2	10.2
550	11.1	10.5	10.5	10.5
600	11.3	10.7	10.7	10.7
650	11.6	10.9	-	10.9
700	11.8	11.2	-	11.2
750	12.0	11.4	-	11.4
800	12.3	11.6	-	11.6
850	12.5	11.9	-	11.9
900	12.7	12.1	-	12.1
950	12.9	12.3	-	12.3
1000	13.1	12.5	-	12.5
1050	13.4	12.8	-	12.8
1100	13.6	13.0	-	13.0

Notes:

1. Source: Material groups J and K in Table TCD on page 765, 766, and 775 of [1.A.1] for Type 304/304LN/316/316LN.
2. Units of thermal conductivity are Btu/hr-ft-^{o}F.
3. Source: Table TCD on page 773 of [1.A.10] for DSS UNS S31803.
4. Maximum temperature of use for duplex stainless steel under both long term storage and short term / accident conditions is noted in Table 1.A.6.

Table 1.A.6 DUPLEX STAINLESS STEEL TEMPERATURE LIMITS [Note 1]	
Parameter	Value
Long Term, Normal Condition Design Temperature Limits (Long-Term Events) (° F)	550
Short-Term Events, Off-Normal, and Accident Condition Temperature Limits (° F)	600

Notes:

1. These temperature limits take precedence over those in Table 2.2.3

Table 1.A.7

ALLOY X MODULI OF ELASTICITY (E) vs. TEMPERATURE

Temp. (Deg. F)	**Moduli of Elasticity (E)**	
	Austenitic stainless steels (304, 304LN, 316, 316LN)	**Duplex stainless steel (UNS S31803)**
-40	28.82	29.78
100	28.14	28.82
150	27.87	28.51
200	27.6	28.2
250	27.3	27.85
300	27.0	27.5
350	26.75	27.25
400	26.5	27.0
450	26.15	26.7
500	25.8	26.4
550	25.55	26.2
600	25.3	26.0
650	25.05	-
700	24.8	-
750	24.45	-
800	24.1	-

Definitions:

E = Young's Modulus (psi x 10^6)

Notes:

1. Source for E values of austenitic stainless steels is material group G in Table TM-1 of [3.3.1].
2. Source for E values of duplex stainless steel is material group H in Table TM-1 of [1.A.10].

To achieve compliance with the above criteria, certain design and operational changes are necessary, as summarized below.

i. The peak fuel cladding temperature limit (PCT) for long term storage operations and short term operations is generally set at 400ºC (752ºF). However, for MPCs containing all moderate burnup fuel, the fuel cladding temperature limit for short-term operations is set at 570ºC (1058ºF) because the nominal fuel cladding stress is shown to be less than 90 MPa [2.0.2]. Appropriate analyses have been performed as discussed in Chapter 4 and operating restrictions have been added to ensure these limits are met.

ii. A method of drying, such as forced helium dehydration (FHD) is used if the above temperature limits for short-term operations cannot be met.

iii. The off-normal and accident condition PCT limit remains unchanged at 570 ºC (1058ºF).

The MPC cavity is dried, either with FHD or vacuum drying (continuous or cyclic), and then it is backfilled with high purity helium to promote heat transfer and prevent cladding degradation.

The normal condition design temperatures for the stainless steel components in the MPC are provided in Table 2.2.3.

The MPC-37 and MPC-89 models allow for regionalized storage where the basket is segregated into three regions as shown in Figures 1.2.1a and 1.2.2. Decay heat limits for regionalized loading are presented in Tables 1.2.3a and 1.2.4 for MPC-37 and MPC-89 respectively. Specific requirements, such as approved locations for DFCs, DFIs and non-fuel hardware are given in Section 2.1.

As an alternative to the regionalized storage patterns, The MPC-37 and MPC-89 models allow for the use of the heat load charts shown in Figures 1.2.3 through 1.2.5 (MPC-37) and 1.2.6 through 1.2.7 (MPC-89).

Shielding

The dose limits for an ISFSI using the HI-STORM FW System are delineated in 10CFR72.104 and 72.106. Compliance with these regulations for any particular array of casks at an ISFSI is necessarily site-specific and must be demonstrated by the licensee. Dose for a single cask and a representative cask array is illustrated in Chapter 5.

The MPC provides axial shielding at the top and bottom ends to maintain occupational exposures ALARA during canister closure and handling operations. The HI-TRAC VW bottom lid also contains shielding. The occupational doses are controlled in accordance with plant-specific procedures and ALARA requirements (discussed in Chapter 9).

evaluation of the potential for brittle fracture in structural steel materials is presented in Section 3.1.

The HI-TRAC VW is designed and evaluated for the maximum heat load analyzed for storage operations. The maximum allowable temperature of water in the HI-TRAC jacket is a function of the internal pressure. To preclude over- pressurization of the water jacket due to boiling of the neutron shield liquid (water), the maximum temperature of the water is restricted to be less than the saturation temperature at the shell design pressure. Even though the analysis shows that the water jacket will not over-pressurize, a relief device is placed at the top of the water jacket shell. In addition, the water is precluded from freezing during off-normal cold conditions by limiting the minimum allowable operating temperature and by adding ethylene glycol. To preclude over-pressurization of the HI-TRAC VW Version V2 neutron shield cylinder (NSC) during a fire accident, the NSC is fitted with a relief device. The thermal characteristics of the fuel for each MPC for which the transfer cask is designed are defined in Section 2.1. The working area ambient temperature limit for loading operations is limited in accordance with Table 2.2.2.

Shielding

The HI-TRAC VW transfer cask provides shielding to maintain occupational exposures ALARA in accordance with 10CFR20, while also maintaining the maximum load on the plant's crane hook to below the rated capacity of the crane. The HI-TRAC VW Version V2 design includes a detachable NSC that can be removed for movements of the MPC and HI-TRAC into and out of the pool such that the amount of gamma shielding is maximized relative to the crane capacity while the water in the MPC provides neutron shielding. The HI-TRAC is then placed inside of and connected to the NSC such that it provides neutron shielding after the water is drained from the MPC. As discussed in Subsection 1.2.1, the shielding in HI-TRAC VW is maximized within the constraint of the allowable weight at a plant site. The HI-TRAC VW calculated dose rates for a set of reference conditions are reported in Section 5.1. These dose rates are used to perform a generic occupational exposure estimate for MPC loading, closure, and transfer operations, as described in Chapter 11. A postulated HI-TRAC VW accident condition, which includes the loss of the liquid neutron shield (water), is also evaluated in Chapter 5.

The annular area between the MPC outer surface and the HI-TRAC VW inner surface can be isolated to minimize the potential for surface contamination of the MPC by spent fuel pool water during wet loading operations. The HI-TRAC VW surfaces expected to require decontamination are coated with a suitable coating. The maximum permissible surface contamination for the HI-TRAC VW is in accordance with plant-specific procedures and ALARA requirements (discussed in Chapter 11).

Confinement

The HI-TRAC VW transfer cask does not perform any confinement function. The HI-TRAC VW provides physical protection and radiation shielding of the MPC contents during MPC loading, unloading, and transfer operations.

Table 2.0.11 – HI-TRAC VW – Version V (Drawing # 11006)		
Item Number*	Part Name	ITS QA Safety Category
1	Flange, Bottom	B
3	Hex Bolt, 2-4 ½ UNC X 6” LG.	B
4	Shell, Inner	B
5	Shielding, Gamma	B
6	Flange, Top	A
7	Shell, Water Jacket	B
10	Pipe, Bolt Recess	B
11	Cap, Bolt Recess	B
12	Bottom Lid	B
13	Shell, Outer	B
14	Rib, Extended	B
15	Rib, Short	B

*Item Numbers are non-consecutive because they are consistent with Parts List on drawing.

Table 2.0.12 – HI-TRAC VW – Version V2 (Drawing # 11283)		
Item Number*	Part Name	ITS QA Safety Category
1	Flange, Bottom	B
3	I-Piece	B
4	Shell, Inner	B
5	Shielding, Gamma	B
6	Flange, Top	A
7	Shell, Outer	B
9	Rib	B
10	Bottom Lid	B
12	NSC, Bottom Lid	B
13	NSC, Shell Inner	B
14	Neutron Shield	B
15	NSC, Rib, Extended	B
16	NSC, Rib, Short	B
17	NSC, Shell Outer	B
18	NSC, Flange Top	B
20	Hex Bolt	B

*Item Numbers are non-consecutive because they are consistent with Parts List on drawing.

2.1 SPENT FUEL TO BE STORED

2.1.1 Determination of the Design Basis Fuel

A central object in the design of the HI-STORM FW System is to ensure that all SNF discharged from the U.S. reactors and not yet loaded into dry storage systems can be stored in a HI-STORM FW MPC. Publications such as references [2.1.1] and [2.1.2] provide a comprehensive description of fuel discharged from U.S. reactors.

The cell openings in the fuel baskets have been sized to accommodate BWR and PWR assemblies. The cavity length of the MPC will be determined for a specific site to accord with the fuel assembly length used at that site, including non-fuel hardware and damaged fuel containers, as applicable.

Table 2.1.1 summarizes the authorized contents for the HI-STORM FW System. Tables 2.1.2 and 2.1.3, which are referenced in Table 2.1.1, provide the fuel characteristics of all groups of fuel assembly types determined to be acceptable for storage in the HI-STORM FW System. Any fuel assembly that has fuel characteristics within the range of Tables 2.1.2 and 2.1.3 and meets the other limits specified in Table 2.1.1 is acceptable for storage in the HI-STORM FW System. The groups of fuel assembly types presented in Tables 2.1.2 and 2.1.3 are defined as "array/classes" as described in further detail in Chapter 6. Table 2.1.4 lists the BWR and PWR fuel assembly designs which are found to govern for three qualification criteria, namely reactivity, shielding, and thermal, or that are used as reference assembly design is those analyses. Additional information on the design basis fuel definition is presented in the following subsections.

2.1.2 Undamaged SNF Specifications

Undamaged fuel is defined in the Glossary.

2.1.3 Damaged SNF and Fuel Debris Specifications

Damaged fuel and fuel debris are defined in the Glossary.

Damaged fuel assemblies and fuel debris will be loaded into damaged fuel containers (DFCs) (Figure 2.1.6) that have mesh screens or perforated plates on the top and bottom. The DFC will have a removable lid to allow the fuel assembly to be inserted. In storage, the lid will be latched in place. DFC's used to move fuel assemblies will be designed for lifting with either the lid installed or with a separate handling lid. DFC's used to handle fuel and the associated lifting tools will designed in accordance with the requirements of NUREG-0612. The DFC will be fabricated from structural aluminum or corrosion resistant alloy steel. For damaged fuel assemblies that can be handled by normal means and whose structural integrity is such that geometric rearrangement of fuel is not expected, the use of a Damaged Fuel Isolator (DFI)

(Figure 2.1.7) can be substituted for the use of the DFC. The DFI is a set of specially designed barriers at the top and bottom of a storage cell space used to prevent the migration of fissile material from those cells. The DFI is made of corrosion resistant alloy steel and includes mesh screens or perforated plates at the top and bottom. DFI storage locations are limited to the same locations defined for DFCs. The appropriate structural, thermal, shielding, criticality, and confinement evaluations, as applicable, have been performed to account for damaged fuel and fuel debris and are described in their respective chapters that follow. The limiting design characteristics for damaged fuel assemblies and restrictions on the number and location of damaged fuel containers authorized for loading in each MPC model are provided in this chapter.

2.1.3.1 Damaged Fuel Isolator

If the damaged fuel assembly can be handled by normal means and its structural integrity is such that geometric rearrangement of fuel is not expected, then the device known as the Damaged Fuel Isolator (DFI) can be used in place of the DFC. Like the DFC, the DFI prevents the migration of fissile material in bulk or coarse particulate form from the nuclear fuel stored in its cellular storage cavity. The DFI can be used only if the fuel can be handled by normal means but is classified as damaged because of physical defect, viz., a breach in the fuel cladding or a structural failure in the grid strap assembly, etc., as explained in ISG-1. Damaged fuel stored utilizing the DFI may contain missing or partial fuel rods and/or fuel rods with known or suspected cladding defects greater than hairline cracks or pinhole leaks as long as the fuel assembly can be handled by normal means.

The DFI is made up of two end caps that, along with the four basket cell walls, comprise the fuel isolation space. The essential attributes of the DFI are:

[Proprietary Information Withheld in Accordance with 10 CFR 2.390]

[Proprietary Information Withheld in Accordance with 10 CFR 2.390]

2.1.4 Structural Parameters for Design Basis SNF

The main physical parameters of an SNF assembly applicable to the structural evaluation are the fuel assembly length, cross sectional dimensions, and weight. These parameters, which define the mechanical and structural design, are specified in Subsection 2.1.8. An appropriate axial clearance is provided to prevent interference due to the irradiation and thermal growth of the fuel assemblies.

2.1.5 Thermal Parameters for Design Basis SNF

The principal thermal design parameter for the stored fuel is the fuel's peak cladding temperature (PCT) which is a function of the maximum decay heat per assembly and the decay heat removal capabilities of the HI-STORM FW System.

To ensure the permissible PCT limits are not exceeded, Subsection 1.2 specifies the maximum allowable decay heat per assembly for each MPC model in the three-region configuration (see also Table 1.2.3 and 1.2.4).

The fuel cladding temperature is also affected by the heat transfer characteristics of the fuel assemblies. The design basis fuel assembly for thermal calculations for both PWR and BWR fuel is provided in Table 2.1.4.

Finally, the axial variation in the heat generation rate in the design basis fuel assembly is defined based on the axial burnup distribution. For this purpose, the data provided in references [2.1.3] and [2.1.4] are utilized and summarized in Table 2.1.5 and Figures 2.1.3 and 2.1.4. These distributions are representative of fuel assemblies with the design basis burnup levels considered. These distributions are used for analyses only, and do not provide a criteria for fuel assembly acceptability for storage in the HI-STORM FW System.

2.1.6 Radiological Parameters for Design Basis SNF

The principal radiological design criteria for the HI-STORM FW System are the 10CFR72 §104 and §106 operator-controlled boundary dose rate limits, and the requirement to maintain operational dose rates as low as reasonably achievable (ALARA). The radiation dose is directly affected by the gamma and neutron source terms of the assembly, which is a function of the assembly type, and the burnup, enrichment and cooling time of the assemblies. Dose rates are further directly affected by the size and arrangement of the ISFSI, and the specifics of the loading operations. All these parameters are site-dependent, and the compliance with the regulatory dose rate requirements are performed in site-specific calculations. The evaluations here are therefore performed with reference fuel assemblies, and with parameters that result in reasonably conservative dose rates. The reference assemblies given in Table 1.0.4 are the predominant assemblies used in the industry.

The design basis dose rates can be met by a variety of burnup levels and cooling times. Table 2.1.1 provides the acceptable ranges of burnup, enrichment and cooling time for all of the authorized fuel assembly array/classes. Table 2.1.5 and Figures 2.1.3 and 2.1.4 provide the axial distribution for the radiological source terms for PWR and BWR fuel assemblies based on the axial burnup distribution. The axial burnup distributions are representative of fuel assemblies with the design basis burnup levels considered. These distributions are used for analyses only, and do not provide a criterion for fuel assembly acceptability for storage in the HI-STORM FW System.

Non-fuel hardware, as defined in the Glossary, has been evaluated and is also authorized for storage in the PWR MPCs as specified in Table 2.1.1.

2.1.6.1 Radiological Parameters for Spent Fuel and Non-fuel Hardware in MPC-32ML, MPC-37 and MPC-89

MPC-32ML is authorized to store 16x16D spent fuel with burnup - cooling time combinations as given in Table 2.1.9. Spent fuel with burnup – cooling time combinations authorized for storage according to the alternative storage patterns shown in Figures 1.2.3 through 1.2.5 (MPC-37) and 1.2.6 through 1.2.7 (MPC-89) are given in Table 2.1.10.

The burnup and cooling time for every fuel assembly loaded into the MPC-32ML, MPC-37 and MPC-89 must satisfy the following equation:

$$Ct = A \cdot Bu^3 + B \cdot Bu^2 + C \cdot Bu + D$$

where,

Ct	= Minimum cooling time (years),
Bu	= Assembly-average burnup (MWd/mtU),
A, B, C, D	= Polynomial coefficients listed in Table 2.1.9 or Table 2.1.10

Minimum cooling time must also meet limits specified in Tables 2.1.1a and 2.1.1b. If the calculated *Ct* is less than the cooling time limits in Tables 2.1.1a or 2.1.1b, the minimum cooling time in table is used.

For MPC-37 and MPC-89, the coefficients for above equation for the assembly in an individual cell depend on the heat load limit in that cell, Table 2.1.10 lists the coefficients for several heat load limit ranges. Note that the heat load limits are only used for the lookup of the coefficients in that table, and do not imply any equivalency. Specifically, meeting heat load limits is not a substitute for meeting burnup and cooling time limits, and vice versa.

Non-fuel hardware, as defined in the Glossary, has been evaluated and is also authorized for storage in the PWR MPCs as specified in Table 2.1.1b.

2.1.7 Criticality Parameters for Design Basis SNF

Criticality control during loading of the MPC-37 is achieved through either meeting the soluble boron limits in Table 2.1.6 OR verifying that the assemblies meet the minimum burnup requirements in Table 2.1.7. Criticality control during loading of the MPC-32ML is achieved through meeting the soluble boron limits in Table 2.1.6.

For those spent fuel assemblies that need to meet the burnup requirements specified in Table 2.1.7, a burnup verification shall be performed in accordance with either Method A OR Method B described below.

Method A: Burnup Verification Through Quantitative Burnup Measurement

For each assembly in the MPC-37 where burnup credit is required, the minimum burnup is determined from the burnup requirement applicable to the loading configuration chosen for the cask (see Table 2.1.7). A measurement is then performed that confirms that the fuel assembly burnup exceeds this minimum burnup. The measurement technique may be calibrated to the reactor records for a representative set of assemblies. The assembly burnup value to be compared with the minimum required burnup should be the measured burnup value as adjusted by reducing the value by a combination of the uncertainties in the calibration method and the measurement itself.

Method B: Burnup Verification Through an Administrative Procedure and Qualitative Measurements

Depending on the location in the basket, assemblies loaded into a specific MPC-37 can either be fresh, or have to meet a single minimum burnup value. The assembly burnup value to be compared with the minimum required burnup should be the reactor record burnup value as adjusted by reducing the value by the uncertainties in the reactor record value. An administrative procedure shall be established that prescribes the following steps, which shall be performed for each cask loading:

Table 2.1.1a MATERIAL TO BE STORED		
PARAMETER	**VALUE**	
	MPC-37	MPC-89
Fuel Type	Uranium oxide undamaged fuel assemblies, damaged fuel assemblies, and fuel debris meeting the limits in Table 2.1.2 for the applicable array/class.	Uranium oxide undamaged fuel assemblies, damaged fuel assemblies, with or without channels, fuel debris meeting the limits in Table 2.1.3 for the applicable array/class.
Cladding Type	ZR (see Glossary for definition)	ZR (see Glossary for definition)
Maximum Initial Rod Enrichment	Depending on soluble boron levels or burnup credit and assembly array/class as specified in Table 2.1.6 and Table 2.1.7.	≤ 5.0 wt. % U-235
Post-irradiation cooling time and average burnup per assembly	Minimum Cooling Time: 1 years and meeting the equation in Subsection 2.1.6 Maximum Assembly Average Burnup: 68.2 GWd/mtU	Minimum Cooling Time: 1.2 years and meeting the equation in Subsection 2.1.6 Maximum Assembly Average Burnup: 65 GWd/mtU

Table 2.1.1a MATERIAL TO BE STORED		
PARAMETER	**VALUE**	
	MPC-37	MPC-89
Non-fuel hardware post-irradiation cooling time and burnup	Minimum Cooling Time: - BPRAs, WABAs, TPDs, water displacement guide tube plugs, orifice rod assemblies and vibration suppressors: 1 year - NSAs, APSRs, RCCAs, CRAs and CEAs: 2 years - ITTRs: not applicable Maximum Burnup†: - BPRAs, WABAs and vibration suppressors: 60 GWd/mtU - TPDs, water displacement guide tube plugs and orifice rod assemblies: 225 GWd/mtU - NSAs, APSRs, RCCAs, CRAs and CEAs: 630 GWd/mtU - ITTRs: not applicable	N/A
Decay heat per fuel storage location	Regionalized Loading: See Tables 1.2.3a and 1.2.3d	Regionalized Loading: See Tables 1.2.4a and 1.2.4b.

† Burnups for non-fuel hardware are to be determined based on the burnup and uranium mass of the fuel assemblies in which the component was inserted during reactor operation. Burnup not applicable for ITTRs since installed post-irradiation.

Table 2.1.1a (continued) MATERIAL TO BE STORED		
PARAMETER	**VALUE**	
	MPC-37	MPC-89
Fuel Assembly Nominal Length (in.)	Minimum: (1) All except 15x15I‡: 157 (with NFH); (2) 15x15I: 149 (with NFH)§ Reference: 167.2 (with NFH) Maximum: 199.2 (with NFH and DFC/DFI)	Minimum: 171 Reference: 176.5 Maximum: 181.5 (with DFC/DFI)
Fuel Assembly Width (in.)	≤ 8.54 (nominal design)	≤ 5.95 (nominal design)
Fuel Assembly Weight (lb)	Reference: 1600 (without NFH) 1750 (with NFH), 1850 (with NFH and DFC/DFI) Maximum: 2050 (including NFH and DFC/DFI)	Reference: 750 (without DFC/DFI), 850 (with DFC/DFI) Maximum: 850 (including DFC/DFI)

‡ See Table 2.1.2 for 15x15I fuel assembly array/class characteristics.
§ Minimum nominal fuel assembly length for 15x15I fuel assembly array/class is 149”. The unique design of 15x15I fuel requires a 1” nominal fuel shim to properly support the assembly. Therefore the minimum MPC cavity height for 15x15I fuel is based on 150” fuel length.

Table 2.1.1a (continued) MATERIAL TO BE STORED		
PARAMETER	**VALUE**	
	MPC-37	MPC-89
Other Limitations	▪ Quantity is limited to 37 undamaged ZR clad PWR fuel assemblies with or without non-fuel hardware. Up to 12 damaged fuel containers or damaged fuel isolators containing PWR damaged fuel and/or fuel debris may be stored in the locations denoted in Figure 2.1.1a with the remaining basket cells containing undamaged ZR fuel assemblies, up to a total of 37. Alternative damaged fuel patterns are shown in Figures 1.2.3b, 1.2.3c, 1.2.4b, 1.2.4c, 1.2.5b, and 1.2.5c. ▪ One NSA. ▪ Up to 30 BPRAs. ▪ BPRAs, TPDs, WABAs, water displacement guide tube plugs, orifice rod assemblies, and/or vibration suppressor inserts, with or without ITTRs, may be stored with fuel assemblies in any fuel cell location. ▪ CRAs, RCCAs, CEAs, NSAs, and/or APSRs may be stored with fuel assemblies in fuel cell locations specified in Figure 2.1.5a.	▪ Quantity is limited to 89 undamaged ZR clad BWR fuel assemblies. Up to 16 damaged fuel containers or damaged fuel isolators containing BWR damaged fuel and/or fuel debris may be stored in locations denoted in Figure 2.1.2 with the remaining basket cells containing undamaged ZR fuel assemblies, up to a total of 89. Alternative damaged fuel patterns are shown in Figures 1.2.6b and 1.2.7b.

Table 2.1.1b MATERIAL TO BE STORED	
PARAMETER	**VALUE**
	MPC-32ML
Fuel Type	Uranium oxide undamaged fuel assemblies, damaged fuel assemblies, and fuel debris meeting the limits in Table 2.1.2 for the 16x16D array/class only.
Cladding Type	ZR (see Glossary for definition)
Maximum Initial Rod Enrichment	Depending on soluble boron levels and assembly array/class as specified in Table 2.1.6.
Post-irradiation cooling time and average burnup per assembly	Minimum Cooling Time: 3 years and meeting the equation in Subsection 2.1.6 Maximum Assembly Average Burnup: 68.2 GWd/mtU
Non-fuel hardware post-irradiation cooling time and burnup†	Minimum Cooling Time: 3 years Maximum Burnup: - BPRAs, WABAs and vibration suppressors: 60 GWd/mtU - TPDs, NSAs, APSRs, RCCAs, CRAs, CEAs, water displacement guide tube plugs and orifice rod assemblies: 630 GWd/mtU - ITTRs: not applicable
Decay heat per fuel storage location	Uniform Loading per Table 1.2.3b.
Fuel Assembly Nominal Length (in)	≤ 196.122 (including NFH and DFC)
Fuel Assembly Width (in)	≤ 9.04 (nominal design)
Fuel Assembly Weight (lb)	≤ 1860 (without NFH) ≤ 2120 (with NFH) ≤ 2200 (including DFC and NFH).

† Burnups for non-fuel hardware are to be determined based on the burnup and uranium mass of the fuel assemblies in which the component was inserted during reactor operation. Burnup not applicable for ITTRs since installed post-irradiation.

Table 2.1.1b (continued) MATERIAL TO BE STORED		
PARAMETER	**VALUE**	
	MPC-32ML	Reserved for Future Use
Other Limitations	▪ Quantity is limited to 32 undamaged ZR clad PWR class 16x16D fuel assemblies with or without non-fuel hardware. Up to 8 damaged fuel containers or damaged fuel isolators containing class 16x16D PWR damaged fuel and/or fuel debris may be stored in the locations denoted in Figure 2.1.1b with the remaining basket cells containing undamaged ZR fuel assemblies, up to a total of 32. ▪ One NSA. ▪ BPRAs, TPDs, WABAs, water displacement guide tube plugs, orifice rod assemblies, and/or vibration suppressor inserts, with or without ITTRs, may be stored with fuel assemblies in any fuel cell location. ▪ CRAs, RCCAs, CEAs, NSAs, and/or APSRs may be stored with fuel assemblies in fuel cell locations specified in Figure 2.1.5b.	▪

Table 2.1.2 PWR FUEL ASSEMBLY CHARACTERISTICS (Note 1, 6)					
Fuel Assembly Array/ Class	**14x14 A**	**14x14 B**	**14x14 C**	**15x15 B**	**15x15 C**
No. of Fuel Rod Locations (Note 5)	179	179	176	204	204
Fuel Clad O.D. (in.)	≥ 0.400	≥ 0.417	≥ 0.440	≥ 0.420	≥ 0.417
Fuel Clad I.D. (in.)	≤ 0.3514	≤ 0.374	≤ 0.3880	≤ 0.3736	≤ 0.3640
Fuel Pellet Dia. (in.) (Note 3)	≤ 0.3444	≤ 0.367	≤ 0.3805	≤ 0.3671	≤ 0.3570
Fuel Rod Pitch (in.)	≤ 0.556	≤ 0.566	≤ 0.580	≤ 0.563	≤ 0.563
Active Fuel Length (in.)	≤ 150	≤ 150	≤ 150	≤ 150	≤ 150
No. of Guide and/or Instrument Tubes	17	17	5 (Note 2)	21	21
Guide/Instrument Tube Thickness (in.)	≥ 0.017	≥ 0.017	≥ 0.038	≥ 0.015	≥ 0.0165

Table 2.1.2 (continued) PWR FUEL ASSEMBLY CHARACTERISTICS (Note 1, 6)					
Fuel Assembly Array/Class	**15x15 D**	**15x15 E**	**15x15 F**	**15x15 H**	**15x15 I**
No. of Fuel Rod Locations (Note 5)	208	208	208	208	216 (Note 4)
Fuel Clad O.D. (in.)	≥ 0.430	≥ 0.428	≥ 0.428	≥ 0.414	≥ 0.413
Fuel Clad I.D. (in.)	≤ 0.3800	≤ 0.3790	≤ 0.3820	≤ 0.3700	≤ 0.3670
Fuel Pellet Dia. (in.) (Note 3)	≤ 0.3735	≤ 0.3707	≤ 0.3742	≤ 0.3622	≤ 0.3600
Fuel Rod Pitch (in.)	≤ 0.568	≤ 0.568	≤ 0.568	≤ 0.568	≤ 0.550
Active Fuel Length (in.)	≤ 150	≤ 150	≤ 150	≤ 150	≤ 150
No. of Guide and/or Instrument Tubes	17	17	17	17	9 (Note 4)
Guide/Instrument Tube Thickness (in.)	≥ 0.0150	≥ 0.0140	≥ 0.0140	≥ 0.0140	≥ 0.0140

Table 2.1.2 (continued)

PWR FUEL ASSEMBLY CHARACTERISTICS (Notes 1, 6)

Fuel Assembly Array and Class	**16x16 A**	**16x16B**	**16x16 C**	**16x16 D (MPC-32ML Only)**	**16x16E**
No. of Fuel Rod Locations (Note 5)	236	236	235	236	235
Fuel Clad O.D. (in.)	≥ 0.382	≥ 0.374	≥ 0.374	≥ 0.423	≥ 0.359
Fuel Clad I.D. (in.)	≤ 0.3350	≤ 0.3290	≤ 0.3290	≤ 0.373	≤ 0.3326
Fuel Pellet Dia. (in.) (Note 3)	≤ 0.3255	≤ 0.3225	≤ 0.3225	≤ 0.359	≤ 0.3225
Fuel Rod Pitch (in.)	≤ 0.506	≤ 0.506	≤ 0.485	≤ 0.563	≤ 0.485
Active Fuel length (in.)	≤ 150	≤ 150	≤ 150	≤ 154.5	≤ 150
No. of Guide and/or Instrument Tubes	5 (Note 2)	5 (Note 2)	21	20	21
Guide/Instrument Tube Thickness (in.)	≥ 0.0350	≥ 0.04	≥ 0.0157	≥ 0.015	≥ 0.0157

Table 2.1.2 (continued) PWR FUEL ASSEMBLY CHARACTERISTICS (Notes 1, 6)					
Fuel Assembly Array and Class	**17x17A**	**17x17 B**	**17x17 C**	**17x17 D**	**17x17 E**
No. of Fuel Rod Locations (note 5)	264	264	264	264	265
Fuel Clad O.D. (in.)	≥ 0.360	≥ 0.372	≥ 0.377	≥ 0.372	≥ 0.372
Fuel Clad I.D. (in.)	≤ 0.3150	≤ 0.3310	≤ 0.3330	≤ 0.3310	≤ 0.3310
Fuel Pellet Dia. (in.) (Note 3)	≤ 0.3088	≤ 0.3232	≤ 0.3252	≤ 0.3232	≤ 0.3232
Fuel Rod Pitch (in.)	≤ 0.496	≤ 0.496	≤ 0.502	≤ 0.496	≤ 0.496
Active Fuel length (in.)	≤ 150	≤ 150	≤ 150	≤ 170	≤ 170
No. of Guide and/or Instrument Tubes	25	25	25	25	24
Guide/Instrument Tube Thickness (in.)	≥ 0.016	≥ 0.014	≥ 0.020	≥ 0.014	≥ 0.014

Notes:

1. All dimensions are design nominal values. Maximum and minimum dimensions are specified to bound variations in design nominal values among fuel assemblies within a given array/class.
2. Each guide tube replaces four fuel rods.
3. Annular fuel pellets are allowed in the top and bottom 12” of the active fuel length.
4. Assemblies have one Instrument Tube and eight Guide Bars (Solid ZR). Some assemblies have up to 16 fuel rods removed or replaced by Guide Tubes.
5. Any number of fuel rods in an assembly can be replaced by irradiated or unirradiated Steel or Zirconia rods. If the rods are irradiated, the site specific dose and dose rate analyses performed under 10 CFR 72.212 should include considerations for the presence of such rods.
6. Any number of fuel rods in an assembly can contain BLEU fuel. If the BLEU rods are present, the site specific dose and dose rate analyses performed under 10 CFR 72.212 should include considerations for the presence of such rods.

Table 2.1.3

BWR FUEL ASSEMBLY CHARACTERISTICS (Note 1, 17)

Fuel Assembly Array and Class	**7x7 B**	**7x7 C**	**8x8 B**	**8x8 C**	**8x8 D**	**8x8 E**
Maximum Planar-Average Initial Enrichment (wt.% ^{235}U) (Note 14)	≤ 4.8	≤ 4.8	≤ 4.8	≤ 4.8	≤ 4.8	≤ 4.8
No. of Fuel Rod Locations (Note 16)	49	48	63 or 64	62	60 or 61	59
Fuel Clad O.D. (in.)	≥ 0.5630	≥ 0.5630	≥ 0.4840	≥ 0.4830	≥ 0.4830	≥ 0.4930
Fuel Clad I.D. (in.)	≤ 0.4990	≤ 0.4990	≤ 0.4295	≤ 0.4250	≤ 0.4230	≤ 0.4250
Fuel Pellet Dia. (in.)	≤ 0.4910	≤ 0.4910	≤ 0.4195	≤ 0.4160	≤ 0.4140	≤ 0.4160
Fuel Rod Pitch (in.)	≤ 0.738	≤ 0.738	≤ 0.642	≤ 0.641	≤ 0.640	≤ 0.640
Design Active Fuel Length (in.)	≤ 150	≤ 150	≤ 150	≤ 150	≤ 150	≤ 150
No. of Water Rods (Note 10)	0	1 (Note 15)	1 or 0	2	1 - 4 (Note 6)	5
Water Rod Thickness (in.)	N/A	N/A	≥ 0.034	> 0.00	> 0.00	≥ 0.034
Channel Thickness (in.)	≤ 0.120	≤ 0.120	≤ 0.120	≤ 0.120	≤ 0.120	≤ 0.100

Table 2.1.3 (continued)

BWR FUEL ASSEMBLY CHARACTERISTICS (Notes 1, 17)

Fuel Assembly Array and Class	**8x8F**	**8x8G**	**9x9 A**	**9x9 B**	**9x9 C**	**9x9 D**
Maximum Planar-Average Initial Enrichment (wt.% ^{235}U) (Note 14)	≤ 4.5 (Note 12)	≤ 4.8	≤ 4.8	≤ 4.8	≤ 4.8	≤ 4.8
No. of Fuel Rod Locations (Note 16)	64	60	74/66 (Note 4)	72	80	79
Fuel Clad O.D. (in.)	≥ 0.4576	≥ 0.5015	≥ 0.4400	≥ 0.4330	≥ 0.4230	≥ 0.4240
Fuel Clad I.D. (in.)	≤ 0.3996	≤ 0.4295	≤ 0.3840	≤ 0.3810	≤ 0.3640	≤ 0.3640
Fuel Pellet Dia. (in.)	≤ 0.3913	≤ 0.4195	≤ 0.3760	≤ 0.3740	≤ 0.3565	≤ 0.3565
Fuel Rod Pitch (in.)	≤ 0.609	≤ 0.642	≤ 0.566	≤ 0.572	≤ 0.572	≤ 0.572
Design Active Fuel Length (in.)	≤ 150	≤ 150	≤ 150	≤ 150	≤ 150	≤ 150
No. of Water Rods (Note 10)	N/A (Note 2)	4 (Note 15)	2	1 (Note 5)	1	2
Water Rod Thickness (in.)	≥ 0.0315	N/A	> 0.00	> 0.00	≥ 0.020	≥ 0.0300
Channel Thickness (in.)	≤ 0.055	≤ 0.120	≤ 0.120	≤ 0.120	≤ 0.100	≤ 0.100

Table 2.1.3 (continued)

BWR FUEL ASSEMBLY CHARACTERISTICS (Note 1, 17)

Fuel Assembly Array and Class	**9x9 E (Note 3)**	**9x9 F (Note 3)**	**9x9 G**	**10x10 A**	**10x10 B**
Maximum Planar-Average Initial Enrichment (wt.% ^{235}U) (Note 14)	≤ 4.5 (Note 12)	≤ 4.5 (Note 12)	≤ 4.8	≤ 4.8	≤ 4.8
No. of Fuel Rod Locations (Note 16)	76	76	72	92/78 (Note 7)	91/83 (Note 8)
Fuel Clad O.D. (in.)	≥ 0.4170	≥ 0.4430	≥ 0.4240	≥ 0.4040	≥ 0.3957
Fuel Clad I.D. (in.)	≤ 0.3640	≤ 0.3860	≤ 0.3640	≤ 0.3520	≤ 0.3480
Fuel Pellet Dia. (in.)	≤ 0.3530	≤ 0.3745	≤ 0.3565	≤ 0.3455	≤ 0.3420
Fuel Rod Pitch (in.)	≤ 0.572	≤ 0.572	≤ 0.572	≤ 0.510	≤ 0.510
Design Active Fuel Length (in.)	≤ 150	≤ 150	≤ 150	≤ 150	≤ 150
No. of Water Rods (Note 10)	5	5	1 (Note 5)	2	1 (Note 5)
Water Rod Thickness (in.)	≥ 0.0120	≥ 0.0120	≥ 0.0320	≥ 0.030	> 0.00
Channel Thickness (in.)	≤ 0.120	≤ 0.120	≤ 0.120	≤ 0.120	≤ 0.120

Table 2.1.3 (continued)

BWR FUEL ASSEMBLY CHARACTERISTICS (Note 1, 17)

Fuel Assembly Array and Class	**10x10 C**	**10x10 F**	**10x10 G**	**10x10 I**	**11x11 A**
Maximum Planar-Average Initial Enrichment (wt.% ^{235}U) (Note 14)	≤ 4.8	≤ 4.7 (Note 13)	≤ 4.6 (Note 12)	≤ 4.8	≤ 4.8
No. of Fuel Rod Locations (Note 16)	96	92/78 (Note 7)	96/84	91/79	112/92
Fuel Clad O.D. (in.)	≥ 0.3780	≥ 0.4035	≥ 0.387	≥ 0.4047	≥ 0.3701
Fuel Clad I.D. (in.)	≤ 0.3294	≤ 0.3570	≤ 0.340	≤ 0.3559	≤ 0.3252
Fuel Pellet Dia. (in.)	≤ 0.3224	≤ 0.3500	≤ 0.334	≤ 0.3492	≤ 0.3193
Fuel Rod Pitch (in.)	≤ 0.488	≤ 0.510	≤ 0.512	≤ 0.5100	≤ 0.4705
Design Active Fuel Length (in.)	≤ 150	≤ 150	≤ 150	≤ 150	≤ 150
No. of Water Rods (Note 10)	5 (Note 9)	2	5 (Note 9)	1 (Note 5)	1 (Note 5)
Water Rod Thickness (in.)	≥ 0.031	≥ 0.030	≥ 0.031	≥ 0.0315	≥ 0.0340
Channel Thickness (in.)	≤ 0.055	≤ 0.120	≤ 0.060	≤ 0.100	≤ 0.100

Table 2.1.3 (continued)

BWR FUEL ASSEMBLY CHARACTERISTICS

NOTES:

1. All dimensions are design nominal values. Maximum and minimum dimensions are specified to bound variations in design nominal values among fuel assemblies within a given array/class.

2. This assembly is known as "QUAD+." It has four rectangular water cross segments dividing the assembly into four quadrants.

3. For the SPC 9x9-5 fuel assembly, each fuel rod must meet either the 9x9E or the 9x9F set of limits or clad O.D., clad I.D., and pellet diameter

4. This assembly class contains 74 total rods; 66 full length rods and 8 partial length rods.

5. Square, replacing nine fuel rods.

6. Variable.

7. This assembly contains 92 total fuel rods; 78 full length rods and 14 partial length rods.

8. This assembly class contains 91 total fuel rods; 83 full length rods and 8 partial length rods.

9. One diamond-shaped water rod replacing the four center fuel rods and four rectangular water rods dividing the assembly into four quadrants.

10. These rods may also be sealed at both ends and contain ZR material in lieu of water.

11. Not Used

12. When loading fuel assemblies classified as damaged fuel assemblies, all assemblies in the MPC are limited to 4.0 wt.% U-235.

13. When loading fuel assemblies classified as damaged fuel assemblies, all assemblies in the MPC are limited to 4.6 wt.% U-235.

14. In accordance with the definition of undamaged fuel assembly, certain assemblies may be limited to 3.3 wt.% U-235. When loading these fuel assemblies, all assemblies in the MPC are limited to 3.3 wt.% U-235.

15. These fuel designs did not have water rods, but instead contain solid zinc rods.

16. Any number of fuel rods in an assembly can be replaced by irradiated or unirradiated Steel or Zirconia rods. If the rods are irradiated, the site specific dose and dose rate analyses performed under 10 CFR 72.212 should include considerations for the presence of such rods.
17. Any number of fuel rods in an assembly can contain BLEU fuel. If the BLEU fuel rods are present, the site specific dose and dose rate analyses performed under 10 CFR 72.212 should include consideration for the presence of such rods.

TABLE 2.1.8
BURNUP CREDIT CONFIGURATIONS

Configuration	Description
Configuration 1	Spent UNDAMAGED fuel assemblies are placed in all positions of the basket
Configuration 2	Fresh UNDAMAGED fuel assemblies are placed in locations 3-4, 3-5, 3-12, and 3-13 (see Figure 2.1.1); spent UNDAMAGED fuel assemblies are placed in the remaining positions
Configuration 3	Damaged Fuel Containers (DFCs) and/or Damaged Fuel Isolators (DFIs) with spent DAMAGED fuel assemblies are placed in locations 3-1, 3-3, 3-4, 3-5, 3-6, 3-7, 3-10, 3-11, 3-12, 3-13, 3-14, and 3-16 (see Figure 2.1.1); spent UNDAMAGED fuel assemblies are placed in the remaining positions
Configuration 4	DFCs with Damaged Fuel and/or fresh FUEL DEBRIS are placed in locations 3-1, 3-7, 3-10, and 3-16 with locations 2-1, 2-5, 2-8, and 2-12 (see Figure 2.1.1) empty; spent UNDAMAGED fuel assemblies are placed in the remaining positions

TABLE 2.1.9
BURNUP AND COOLING TIME FUEL QUALIFICATION REQUIREMENTS
FOR MPC-32ML

Polynomial Coefficients, see Paragraph 2.1.6.1			
A	**B**	**C**	**D**
6.7667E-14	-3.6726E-09	8.1319E-05	2.7951E+00

TABLE 2.1.10
BURNUP AND COOLING TIME FUEL QUALIFICATION REQUIREMENTS
FOR MPC-37 AND MPC-89

Cell Decay Heat Load Limit (kW)	**Polynomial Coefficients, see Paragraph 2.1.6.1**			
	A	**B**	**C**	**D (Note 1)**
MPC-37				
≤ 0.85	1.68353E-13	-9.65193E-09	2.69692E-04	2.95915E-01
0.85 < decay heat ≤ 3.5	1.19409E-14	-1.53990E-09	9.56825E-05	-3.98326E-01
MPC-89				
≤ 0.32	1.65723E-13	-9.28339E-09	2.57533E-04	3.25897E-01
0.32 < decay heat ≤ 0.5	3.97779E-14	-2.80193E-09	1.36784E-04	3.04895E-01
0.5 < decay heat ≤ 0.75	1.44353E-14	-1.21525E-09	8.14851E-05	3.31914E-01
0.75 < decay heat ≤ 1.1	-7.45921E-15	1.09091E-09	-1.14219E-05	9.76224E-01
1.1 < decay heat ≤ 1.45	3.10800E-15	-7.92541E-11	1.56566E-05	6.47040E-01
1.45 < decay heat ≤ 1.6	-8.08081E-15	1.23810E-09	-3.48196E-05	1.11818E+00

Notes:

1. For BLEU fuel, coefficient D is increased by 1.

TABLE 2.1.11
DAMAGED FUEL ISOLATOR CRITICAL CHARACTERISTICS

[Proprietary Information Withheld in Accordance with 10 CFR 2.390]

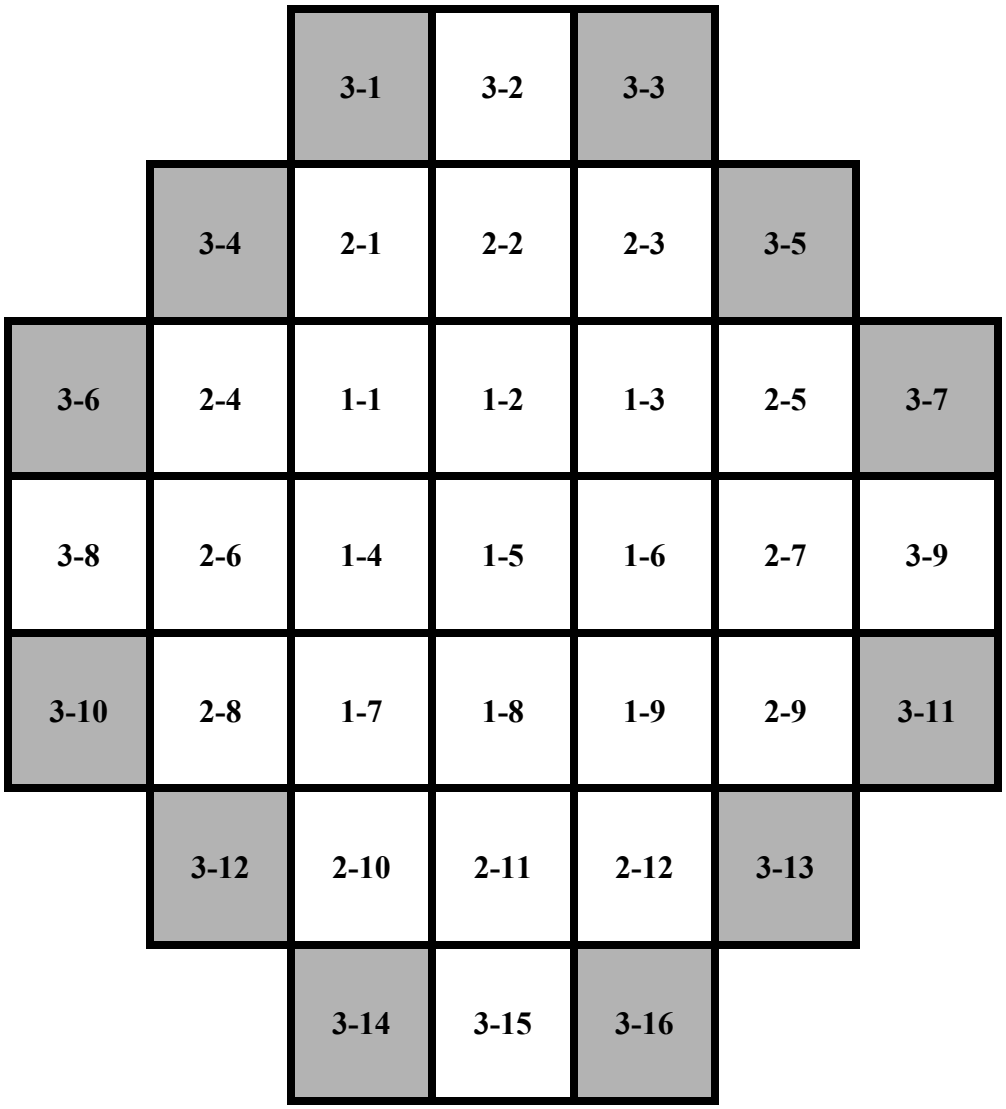

Figure 2.1.1a Location of DFCs/DFIs for Damaged Fuel or Fuel Debris in the MPC-37 (Shaded Cells) under Patterns A and B

See Figures 1.2.3, 1.2.4, and 1.2.5 for the locations of DFCs/DFIs for alternative damaged fuel and fuel debris loading patterns.

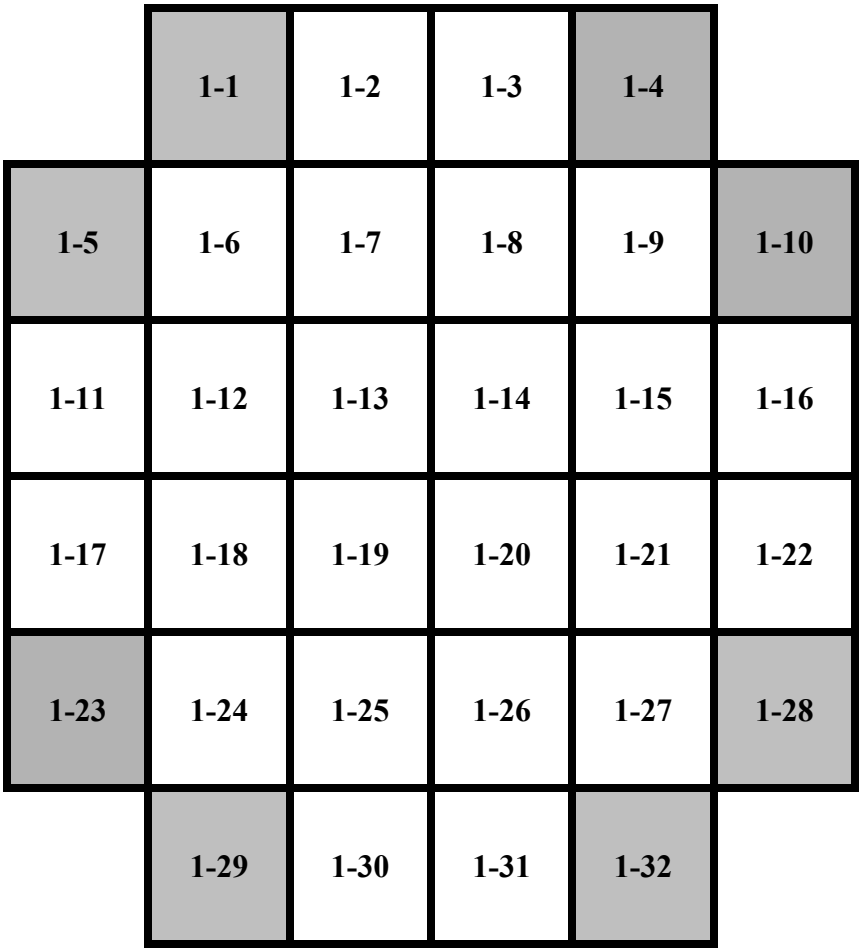

Figure 2.1.1b Location of DFCs/DFIs for Damaged Fuel or Fuel Debris in the MPC-32ML (Shaded Cells)

				3-1	3-2	3-3				
		3-4	3-5	3-6	2-1	3-7	3-8	3-9		
	3-10	3-11	2-2	2-3	2-4	2-5	2-6	3-12	3-13	
	3-14	2-7	2-8	2-9	2-10	2-11	2-12	2-13	3-15	
3-16	3-17	2-14	2-15	1-1	1-2	1-3	2-16	2-17	3-18	3-19
3-20	2-18	2-19	2-20	1-4	1-5	1-6	2-21	2-22	2-23	3-21
3-22	3-23	2-24	2-25	1-7	1-8	1-9	2-26	2-27	3-24	3-25
	3-26	2-28	2-29	2-30	2-31	2-32	2-33	2-34	3-27	
	3-28	3-29	2-35	2-36	2-37	2-38	2-39	3-30	3-31	
		3-32	3-33	3-34	2-40	3-35	3-36	3-37		
				3-38	3-39	3-40				

Figure 2.1.2 Location of DFCs/DFIs for Damaged Fuel or Fuel Debris in the MPC-89 (Shaded Cells)

See Figures 1.2.6 and 1.2.7 for the locations of DFCs/DFIs for alternative damaged fuel and fuel debris loading patterns.

[Proprietary Information Withheld in Accordance with 10 CFR 2.390]

Figure 2.1.7: Damaged Fuel Isolator (Typical)
Example configuration. Final configuration may vary with fuel type.

[Proprietary Information Withheld in Accordance with 10 CFR 2.390]

Figure 2.1.7 (Continued): Damaged Fuel Isolator (Typical)
Example configuration. Final configuration may vary with fuel type.

2.2 HI-STORM FW DESIGN LOADINGS

The HI-STORM FW System is engineered for unprotected outside storage for the duration of its design life. Accordingly, the cask system is designed to withstand normal, off-normal, and environmental phenomena and accident conditions of storage. Normal conditions include the conditions that are expected to occur regularly or frequently in the course of normal operation. Off-normal conditions include those infrequent events that could reasonably be expected to occur during the lifetime of the cask system. Environmental phenomena and accident conditions include events that are postulated because their consideration establishes a conservative design basis.

Normal condition loads act in combination with all other loads (off-normal or environmental phenomena/accident). Off-normal condition loads and environmental phenomena and accident condition loads are not applied in combination. However, loads that occur as a result of the same phenomena are applied simultaneously. For example, the tornado winds loads are applied in combination with the tornado missile loads.

In the following subsections, the design criteria are established for normal, off-normal, and accident conditions for storage. The following conditions of storage and associated loads are identified:

i. Normal (Long-Term Storage) Condition: Dead Weight, Handling, Pressure, Temperature, Snow.

ii. Off-Normal Condition: Pressure, Temperature, Leakage of One Seal, Partial Blockage of Air Inlets for HI-STORM FW, HI-TRAC VW Version V, and HI-TRAC VW Version V2.

iii. Accident Condition: Handling Accident, Non-Mechanistic Tip-Over, Fire, Partial Blockage of MPC Basket Flow Holes, Tornado, Flood, Earthquake, Fuel Rod Rupture, Confinement Boundary Leakage, Explosion, Lightning, Burial Under Debris, 100% Blockage of Air Inlets for HI-STORM FW, HI-TRAC VW Version V, and HI-TRAC VW Version V2, Extreme Environmental Temperature.

iv. Short-Term Operations: This loading condition is defined to accord with ISG-11, Revision 3 [2.0.1] guidance. This includes those normal operational evolutions necessary to support fuel loading or unloading activities. These include, but are not limited to MPC cavity drying, helium backfill, MPC transfer, and on-site handling of a loaded HI-TRAC VW transfer cask.

Each of these conditions and the applicable loads are identified herein with their applicable design criteria. A design criterion is deemed to be satisfied if the allowable limits for the specific loading conditions are not exceeded.

2.2.1 Loadings Applicable to Normal Conditions of Storage

a. Dead Weight

The HI-STORM FW System must withstand the static loads due to the weights of each of its components, including the weight of the HI-TRAC VW with the loaded MPC stacked on top the storage overpack during the MPC transfer.

b. Handling Evolutions

The HI-STORM FW System must withstand loads experienced during routine handling. Normal handling includes:

i. Vertical lifting and transfer to the ISFSI of the HI-STORM FW overpack containing a loaded MPC.
ii. Vertical lifting and handling of the HI-TRAC VW transfer cask containing a loaded MPC.
iii. Lifting of a loaded MPC.
iv. Vertical lifting and handling of the HI-TRAC VW Version V2 NSC.

The dead load of the lifted component is increased by 15% in the stress qualification analyses (to meet ANSI N14.6 guidance) to account for dynamic effects from lifting operations as suggested in CMAA #70 [2.2.1].

Handling operations of the loaded HI-TRAC VW transfer cask or HI-STORM FW overpack are limited to working area ambient temperatures specified in Table 2.2.2. This limitation is specified to ensure a sufficient safety margin against brittle fracture during handling operations.

Table 2.2.6 summarizes the analyses required to qualify all threaded anchor locations in the HI-STORM FW System.

c. Pressure

The MPC internal pressure is dependent on the initial volume of cover gas (helium), the volume of fill gas in the fuel rods, the fraction of fission gas released from the fuel matrix, the number of fuel rods assumed to have ruptured, and temperature.

The normal condition MPC internal design pressure bounds the cumulative effects of the maximum fill gas volume, normal environmental ambient temperatures, the maximum MPC heat load, and an assumed 1% of the fuel rods ruptured with 100% of the fill gas and 30% of the significant radioactive gases (e.g., H^3, Kr, and Xe) released in accordance with NUREG-1536.

For the storage of damaged fuel assemblies or fuel debris in a damaged fuel container (DFC) or a damaged fuel isolator (DFI), it shall be conservatively assumed that 100% of the fuel rods are ruptured with 100% of the rod fill gas and 30% of the significant radioactive gases (e.g., H^3, Kr,

bound the maximax (maximum in time and space) value of the thru-thickness average temperature of the structural or non-structural part, as applicable, during the transient event. These enveloping values, therefore, will bound the maximum temperature reached anywhere in the part, excluding skin effects, during or immediately after, a transient event.

The off-normal/accident condition temperatures for stainless steel and carbon steel components are chosen such that the material's ultimate tensile strength does not fall below 30% of its room temperature value, based on data in published references [2.2.4 and 2.2.5]. This ensures that the material will not be subject to significant creep rates during these short duration transient events.

Additionally, temperature limits are also defined for short-term normal operating conditions which include, but are not limited to, MPC drying operations and onsite transport operations. The short-term temperature limits for all the components are specified in Table 2.2.3.

d. Leakage of One Seal

The MPC enclosure vessel does not contain gaskets or seals: All confinement boundary closure locations are welded. Because the material of construction (Alloy X, see Appendix 1.A) is known from extensive industrial experience to lend to high integrity, high ductility and high fracture strength welds, the MPC enclosure vessel welds provide a secure barrier against leakage.

The confinement boundary is defined by the MPC shell, MPC baseplate, MPC lid, port cover plates, closure ring, and associated welds. Most confinement boundary welds are inspected by radiography or ultrasonic examination. Field welds are examined by the liquid penetrant method on the root (if more than one weld pass is required) and final weld passes. In addition to multi-pass liquid penetrant examination, the MPC lid-to-shell weld is pressure tested. The vent and drain port cover plates are also subject to proven non-destructive evaluations for leak detection such as liquid penetrant examination. These inspection and testing techniques are performed to verify the integrity of the confinement boundary. Therefore, leakage of one seal is not evaluated for its consequence to the storage system.

e. Partial Blockage of Air Inlets/Outlets

The loaded HI-STORM FW overpack must withstand the partial blockage of the air vents. Because the overpack air inlets and outlets are covered by screens and inspected routinely (or alternatively, equipped with temperature monitoring devices), significant blockage of all vents by blowing debris, critters, etc., is very unlikely. Nevertheless, the inherent thermal stability of the HI-STORM FW System shall be demonstrated by assuming all air inlets and/or outlets are partially blocked as an off-normal event. Partial blockage of the overpack vents is discussed in Section 4.6.

The loaded HI-TRAC VW Versions V and V2 rely on a clear air flow path during normal short term loading operations. Because the HI-TRAC inlets and outlets are routinely monitored due to the short term operations which occur when the MPC is in the HI-TRAC, significant blockage of

the air flow path is not credible. The HI-TRAC VW Versions V and V2 shall not be left unattended and thus additional analyses are not required.

f. Malfunction of FHD

The FHD system is a forced helium circulation device used to effectuate moisture removal from loaded MPCs. For circulating helium, the FHD system is equipped with active components requiring external power for normal operation.

Initiating events of FHD malfunction are: (i) a loss of external power to the FHD System and (ii) an active component trip. In both cases a stoppage of forced helium circulation occurs and heat dissipation in the MPC transitions to natural convection cooling.

Although the FHD System is monitored during its operation, stoppage of FHD operations does not require actions to restore forced cooling for adequate heat dissipation. This is because the condition of natural convection cooling evaluated in Section 4.6 shows that the fuel temperatures remain below off-normal limits. An FHD malfunction is detected by operator response to control panel visual displays and alarms.

2.2.3 Environmental Phenomena and Accident Condition Design Criteria

Environmental phenomena and accident condition design criteria are defined in the following subsections.

The minimum acceptance criteria for the evaluation of the accident conditions are that the MPC confinement boundary continues to confine the radioactive material, the MPC fuel basket structure maintains the configuration of the contents, the canister can be recovered from the overpack, and the system continues to provide adequate shielding.

A discussion of the effects of each environmental phenomenon and accident condition is provided in Section 12.2. The consequences of each accident or environmental phenomenon are evaluated against the requirements of 10CFR72.106 and 10CFR20. Section 12.2 also provides the corrective action for each event.

a. Handling Accident

A handling accident in the Part 72 jurisdiction is precluded by the requirements and provisions specified in this FSAR. The loaded HI-STORM FW components will be lifted in the Part 72 operations jurisdiction in accordance with written and Q.A. validated procedures and shall use lifting devices which comply with ANSI N14.6-1993 [2.2.2] or applicable code. Also, the lifting and handling equipment (typically the cask transporter, which has specific requirements identified in paragraph 1.2.1.5) is required to have a built-in redundancy against uncontrolled lowering of the load. Further, the HI-STORM FW is a vertically deployed system, and the handling evolutions in *short term operations*, as discussed in Chapter 9, do not involve downending of the loaded cask to the horizontal configuration (or upending from the horizontal

surfaces are considered to receive an incident radiation and forced convection heat flux from the fire. Table 2.2.8 provides the fire durations for the HI-STORM FW overpack and HI-TRAC VW transfer cask based on the amount of flammable materials assumed. The temperature of fire is assumed to be 1475° F to accord with the provisions in 10CFR71.73.

The neutron shield material in the HI-TRAC VW Version V2 NSC may produce vapor by-products in the event of a fire accident. The design pressure for the NSC is listed in Table 2.2.1. A pressure relief device is used to ensure that the NSC design pressure will not be exceeded.

The following acceptance criteria apply to the fire accident:

i. The peak cladding temperature during and after a fire accident shall not exceed the ISG-11 [2.0.1] permissible limit (see Table 2.2.3).
ii. The through-thickness average temperature of concrete at any section shall not exceed its short-term limit in Table 2.2.3.
iii. The steel structure of the overpack shall remain physically stable; i.e., no risk of structural instability such as gross buckling.

d. Partial Blockage of MPC Basket Flow Holes

The HI-STORM FW MPC is designed to prevent reduction of thermosiphon action due to partial blockage of the MPC basket flow holes by fuel cladding failure, fuel debris and crud. The HI-STORM FW System maintains the SNF in an inert environment with fuel rod cladding temperatures below accepted values (Table 2.2.3). Therefore, there is no credible mechanism for gross fuel cladding degradation of fuel classified as undamaged during storage in the HI-STORM FW. Fuel classified as damaged fuel or fuel debris are placed in damaged fuel containers. The damaged fuel container is equipped with mesh screens which ensure that the damaged fuel and fuel debris will not escape to block the MPC basket flow holes. The MPC is loaded once for long-term storage and, therefore, buildup of crud in the MPC due to numerous loadings is precluded. Using crud quantities for fuel assemblies reported in an Empire State Electric Energy Research Corporation Report [2.2.6] determines a layer of crud of conservative depth that is assumed to partially block the MPC basket flow holes. The crud depth is listed in Table 2.2.8. The flow holes in the bottom of the fuel basket are designed (as can be seen on the licensing drawings) to ensure that this amount of crud does not block the internal helium circulation.

e. Tornado

The HI-STORM FW System must withstand pressures, wind loads, and missiles generated by a tornado. The prescribed design basis tornado and wind loads for the HI-STORM FW System are consistent with NRC Regulatory Guide 1.76 [2.2.7], ANSI 57.9 [2.2.8], and ASCE 7-05 [2.2.3]. Table 2.2.4 provides the wind speeds and pressure drops the HI-STORM FW overpack can withstand while maintaining kinematic stability. The pressure drop is bounded by the accident condition MPC external design pressure.

design basis external pressure (Table 2.2.1) has been defined as a design basis loading event wherein the internal pressure is non-mechanistically assumed to be absent.

k. Lightning

The HI-STORM FW System must withstand loads due to lightning. The effect of lightning on the HI-STORM FW System is evaluated in Chapter 12.

l. Burial Under Debris and Duct Blockage

Debris may collect on the HI-STORM FW overpack vent screens as a result of floods, wind storms, or mud slides. Siting of the ISFSI pad shall ensure that the storage location is not located over shifting soil. However, if burial under debris is a credible event for an ISFSI, then a thermal analysis to analyze the effect of such an accident condition shall be performed for the site using the analysis methodology presented in Chapter 4. The duration of the burial-under-debris scenario will be based on the ISFSI owner's emergency preparedness program. The following acceptance criteria apply to the burial-under-debris accident event:

i. The fuel cladding temperature shall not exceed the ISG-11, Revision 3 [2.0.1] temperature limits.
ii. The internal pressure in the MPC cavity shall not exceed the accident condition design pressure limit in Table 2.2.1.

The burial-under-debris analysis will be performed if applicable, for the site-specific conditions and heat loads.

The scenario of complete blockage of inlet and/or outlet ducts is described and evaluated in Section 4.6.

The loaded HI-TRAC VW Versions V and V2 rely on a clear air flow path during normal short term loading operations. Because the HI-TRAC inlets and outlets are routinely monitored due to the short term operations which occur when the MPC is in the HI-TRAC, significant blockage of the air flow path is not credible. The HI-TRAC VW Versions V and V2 shall not be left unattended and thus additional analyses are not required.

m. Extreme Environmental Temperature

The HI-STORM FW System must withstand extreme environmental temperatures. The extreme accident level temperature is specified in Table 2.2.2. The extreme accident level temperature is assumed to occur with steady-state insolation. This temperature is assumed to persist for a sufficient duration to allow the system to reach steady-state temperatures. The HI-STORM FW overpack and MPC have a large thermal inertia; therefore, extreme environmental temperature is a 3-day average for the ISFSI site.

FW System. In particular, the ASME Code is relied on to define allowable stresses for structural analyses of Code materials.

2.2.5 Service Limits

In the ASME Code, plant and system operating conditions are commonly referred to as normal, upset, emergency, and faulted. Consistent with the terminology in NRC documents, this FSAR utilizes the terms normal, off-normal, and accident conditions.

The ASME Code defines four service conditions in addition to the Design Limits for nuclear components. They are referred to as Level A, Level B, Level C, and Level D service limits, respectively. Their definitions are provided in Paragraph NCA-2142.4 of the ASME Code. The four levels are used in this FSAR as follows:

i. Level A Service Limits are used to establish allowables for normal condition load combinations.

ii. Level B Service Limits are used to establish allowables for off-normal conditions.

iii. Level C Service Limits are not used.

iv. Level D Service Limits are used to establish allowables for certain accident conditions.

The ASME Code service limits are used in the structural analyses for definition of allowable stresses and allowable stress intensities, as applicable. Allowable stresses and stress intensities for structural analyses are tabulated in Chapter 3. These service limits are matched with normal, off-normal, and accident condition loads combinations in the following subsections.

The MPC confinement boundary is required to meet Section III, Class 1, Subsection NB stress intensity limits. Table 2.2.10 lists the stress intensity limits for Design and Service Levels A, B, and D for Class 1 structures extracted from the ASME Code. Table 2.2.12 lists allowable stress limits for the steel structure of the HI-STORM FW overpack and HI-TRAC VW transfer cask which are analyzed to meet the stress limits of Subsection NF, Class 3 for loadings defined as service levels A, B, and D are applicable.

2.2.6 Loads

Subsections 2.2.1, 2.2.2, and 2.2.3 describe the design criteria for normal, off-normal, and accident conditions, respectively. The loads are listed in Tables 2.2.7 and 2.2.13, along with the applicable acceptance criteria.

2.2.7 Design Basis Loads

Table 2.2.1 PRESSURE LIMITS		
Pressure Location	**Condition**	**Pressure (psig)**
MPC Internal Pressure	Design / Long-Term Normal	100
	Short-Term Normal	115
	Off-Normal	120
	Accident	200
MPC External Pressure	Normal	(0) Ambient
	Off-Normal/Short-Term	(0) Ambient
	Accident	55
HI-TRAC Water Jacket Internal Pressure	Accident	65
HI-TRAC VW Version V2 NSC Internal Pressure	Accident	35
Overpack External Pressure	Normal	(0) Ambient
	Off-Normal/Short-Term	(0) Ambient
	Accident	See Paragraph 3.1.2.1.d

Table 2.2.3 TEMPERATURE LIMITS			
HI-STORM FW Component	**Normal Condition and Design Temperature Limits (°F)**	**Short Term Events†† Temperature Limits (°F)**	**Off-Normal and Accident Condition Temperature Limits † (°F)**
MPC shell	600*	800*	800*
MPC basket	752	932	932
MPC basket shims	752	932	932
MPC lid	600*	800*	800*
MPC closure ring	500*	800*	800*
MPC baseplate	400*	800*	800*
HI-TRAC VW inner shell	-	600	700
HI-TRAC VW outer shell	-	500	700
HI-TRAC VW bottom lid	-	500	700
HI-TRAC VW water jacket shell	-	500	700**
HI-TRAC VW top flange	-	500	650
HI-TRAC VW bottom lid seals	-	400	N/A
HI-TRAC VW bottom lid bolts	-	400	800
HI-TRAC VW bottom flange	-	400	700
HI-TRAC VW radial neutron shield	-	311	N/A
HI-TRAC VW radial lead gamma shield	-	600	600
HI-TRAC VW Version V2 NSC steel	-	400	600

†† Short term operations include, but are not limited to, MPC drying and onsite transport. The 1058°F temperature limit applies to MPCs containing all moderate burnup fuel. The limit for MPCs containing one or more high burnup fuel assemblies is 752°F.

* Temperature limits in Table 1.A.6 shall take precedence if duplex stainless steels are used for the fabrication of confinement boundary components, as described in Appendix 1.A.

** For fire accidents, the steel structure is required to remain physically stable similar to HI-STORM overpack.

† For accident conditions that involve heating of the steel structures and no mechanical loading (such as the blocked air duct accident), the permissible metal temperature of the steel parts is defined by Table 1A of ASME Section II (Part D) for Section III, Class 3 materials as 700°F. For the fire event, the structure is required to remain physically stable (no specific temperature limits apply)

Notes: 1.The normal condition temperature limits are used in the design basis structural evaluations for MPC and HI-STORM. The short-term condition temperature limits are used in the design basis structural evaluations for HI-TRAC. All other short-term, off-normal, and accident condition structural evaluations are based on bounding temperatures from thermal evaluations presented in Chapter 4.

2. The temperature limits provided for HI-TRAC VW are applicable to Version V and V2 unless otherwise specified.

Table 2.2.3 TEMPERATURE LIMITS			
HI-STORM FW Component	**Normal Condition and Design Temperature Limits (°F)**	**Short Term Events†† Temperature Limits (°F)**	**Off-Normal and Accident Condition Temperature Limits † (°F)**
HI-TRAC VW Version V2 NSC Holtite-A	-	300	350
Fuel Cladding	752 (Storage)	752 or 1058 (Short Term Operations)††	1058 (Off-Normal and Accident Conditions)
Overpack concrete	300 (see HI-STORM 100 FSAR Appendix 1.D)	300	572
Overpack Lid Top and Bottom Plate	450	450	572
Remainder of overpack steel structure	350	350	700
Damaged Fuel Isolator	752	932	932

Table 2.2.7 LOADS APPLICABLE TO THE NORMAL AND OFF-NORMAL CONDITIONS OF STORAGE				
Loading Case	Loading	Affected Item and Part	Magnitude of Loading	Acceptance Criterion
NA.	Snow and Ice	Top lid of HI-STORM FW overpack	Table 2.2.8	The stress in the steel structure must meet NF Class 3 limits for linear structures
NB.	Internal Pressure‡‡	MPC Enclosure Vessel	Table 2.2.1	Meet "NB" stress intensity limits
	a. Design or Long-term Normal Condition	MPC Enclosure Vessel	Table 2.2.1	Design condition limits on primary stress intensities
	b. Short-term Normal Condition	MPC Enclosure Vessel	Table 2.2.1	Level A limits on primary and secondary stress intensities
	c. Short-term Normal Lifting Operation	MPC Enclosure Vessel	Table 2.2.1	Level A limits on primary stress intensities
	d. Off-Normal Condition	MPC Enclosure Vessel	Table 2.2.1	Level B limits on primary and secondary stress intensities.

‡‡ Normal condition internal pressure is bounded by the Design Internal Pressure in Table 2.2.1. Because the top and bottom extremities of the MPC Enclosure Vessel are each at a uniform temperature due to the recirculating helium, thermal stresses are minimal. Therefore, the Design Internal Pressure envelops the case of the Normal Service condition for the MPC. The same remark applies to the Off-Normal Service condition.

Table 2.2.10

MPC CONFINEMENT BOUNDARY STRESS INTENSITY LIMITS
FOR DIFFERENT LOADING CONDITIONS (ELASTIC ANALYSIS PER NB-3220)†

Stress Category	Design	Level A*	Level D††
Primary Membrane, P_m	S_m	S_m	AMIN ($2.4S_m$, $0.7S_u$)
Local Membrane, P_L	$1.5S_m$	$1.5S_m$	150% of P_m Limit
Membrane plus Primary Bending	$1.5S_m$	$1.5S_m$	150% of P_m Limit
Primary Membrane plus Primary Bending	$1.5S_m$	N/A	150% of P_m Limit
Membrane plus Primary Bending plus Secondary	N/A	$3S_m$	N/A
Average Shear Stress††††	$0.6S_m$	$0.6S_m$	$0.42S_u$

† Stress combinations including F (peak stress) apply to fatigue evaluations only.
†† Governed by Appendix F, Paragraph F-1331 of the ASME Code, Section III.
†††† Governed by NB-3227.2 or F-1331.1(d).
* The values of Level A Service Limits shall apply for Level B Service Limits, except that for primary stress intensities generated by Level B Service Loadings, allowable stress intensity values of 110% of Level A limits shall apply per NB-3223.

Table 2.2.13 LOADING EVENTS AND ACCEPTANCE CRITERIA APPLICABLE TO ACCIDENT CONDITIONS AND EXTREME ENVIRONMENTAL PHENOMENA				
AG.	Burial Under Debris	Stored SNF	Blocks convection and retards conduction as means for heat dissipation	See Paragraph 2.2.3(l). Determine the permissible time elapsed under debris so that the pressure in the MPC does not exceed the Accident Condition Design Pressure and the fuel cladding temperature remains below the ISG-11 limit.
AH	Design Basis External Pressure	MPC Enclosure Vessel	An assumed non-mechanistic load from deep submergence in flood water or explosion in the vicinity of the ISFSI	Demonstrate that the MPC Enclosure Vessel will not buckle, i.e., become structurally unstable
AJ.	Internal pressure developed in the HI-TRAC water jacket	HI-TRAC Water Jacket	A non-mechanistic (postulated) event	The water jacket will meet Level D stress limits for “NF” components.
AK.	Internal pressure developed in the HI-TRAC VW Version V2 NSC	Neutron Shield Cylinder	A non-mechanistic (postulated) event	The NSC steel shell will meet Level D stress limits for “NF” components.

TABLE 2.2.14
List of ASME Code Alternatives for Multi-Purpose Canisters (MPCs)

		nominal thickness of the pressure retaining material. NB-1132.2(e) requires that the first connecting weld of a welded nonstructural attachment to a component shall conform to NB-4430 if the connecting weld is within 2t from the pressure retaining portion of the component.	
MPC Enclosure Vessel	NB-2000	Requires materials to be supplied by ASME-approved material supplier.	Materials will be supplied by Holtec approved suppliers with Certified Material Test Reports (CMTRs) in accordance with NB-2000 requirements.
MPC Enclosure Vessel	NB-2121	Provides permitted material specification for pressure-retaining material, which must conform to Section II, Part D, Tables 2A and 2B.	Certain duplex stainless steels are not included in Section II, Part D, Tables 2A and 2B. UNS S31803 duplex stainless steel alloy is evaluated in the HI-STORM FW FSAR and meet the required design criteria for use in the HI-STORM FW system per ASME Code Case N-635-1. Appendix 1.A provides the required property data for the necessary safety analysis.
MPC Enclosure Vessel	NB-3100 NF-3100	Provides requirements for determining design loading conditions, such as pressure, temperature, and mechanical loads.	These requirements are subsumed by the HI-STORM FW FSAR, serving as the Design Specification, which establishes the service conditions and load combinations for the storage system.
MPC Enclosure Vessel	NB-4120	NB-4121.2 and NF-4121.2 provide requirements for repetition of tensile or impact tests for material subjected to heat treatment during fabrication or installation.	In-shop operations of short duration that apply heat to a component, such as plasma cutting of plate stock, welding, machining, and coating are not, unless explicitly stated by the Code, defined as heat treatment operations.
MPC Enclosure Vessel	NB-4220	Requires certain forming tolerances to be met for cylindrical, conical, or spherical shells of a vessel.	The cylindricity measurements on the rolled shells are not specifically recorded in the shop travelers, as would be the case for a Code-stamped pressure vessel. Rather, the requirements on inter-component clearances (such as the MPC-to-transfer cask) are guaranteed through fixture-controlled manufacturing. The fabrication specification and shop procedures ensure that all dimensional design objectives, including inter-component annular

3.1 STRUCTURAL DESIGN

3.1.1 Discussion

The HI-STORM FW system consists of the Multi-Purpose Canister (MPC) and the storage overpack (Figure 1.1.1). The components subject to certification on this docket consist of the HI-STORM FW system components and the HI-TRAC VW transfer cask (please see Table 1.0.1). A complete description of the design details of these three components are provided in Section 1.2. This section discusses the structural aspects of the MPC, the storage overpack, and the HI-TRAC VW (including Versions V and V2) transfer cask. Detailed licensing drawings for each component are provided in Section 1.5.

(i) The Multi-Purpose Canister (MPC)

The design of the MPC seeks to attain three objectives that are central to its functional adequacy:

- Ability to Dissipate Heat: The thermal energy produced by the stored spent fuel must be transported to the outside surface of the MPC to maintain the fuel cladding and fuel basket metal walls below the regulatory temperature limits.

- Ability to Withstand Large Impact Loads: The MPC, with its payload of nuclear fuel, must withstand the large impact loads associated with the non-mechanistic tipover event.

- Restraint of Free End Expansion: The MPC structure is designed so that membrane and bending (primary) stresses produced by constrained thermal expansion of the fuel basket do not arise.

As stated in Chapter 1, the MPC Enclosure Vessel is a confinement vessel designed to meet the stress limits in ASME Code, Section III, Subsection NB. The enveloping canister shell, baseplate, and the lid system form a complete Confinement Boundary for the stored fuel that is referred to as the "Enclosure Vessel". Within this cylindrical shell confinement vessel is an egg-crate assemblage of Metamic-HT plates that form prismatic cells with square cross sectional openings for fuel storage, referred to as the fuel basket. All multi-purpose canisters designed for deployment in the HI-STORM FW have identical external diameters. The essential difference between the different MPCs lies in the fuel baskets, each of which is designed to house different types of fuel assemblies. All fuel basket designs are configured to maximize structural integrity through extensive inter-cell connectivity. Although all fuel basket designs are structurally similar, analyses for each of the MPC types is carried out separately to ensure structural compliance.

The design criteria of components in the HI-STORM FW system important to safety are defined in Chapter 2.

(iii) Transfer Cask

The HI-TRAC VW transfer cask is the third component type subject to certification. Strictly speaking, the transfer cask is an ancillary equipment which serves to enable the *short term operations* to be carried out safely and ALARA. Specifically, the transfer cask provides a missile and radiation barrier during transport of the MPC from the fuel pool to the HI-STORM FW overpack. Because of its critical role in insuring a safe dry storage implementation, the transfer cask is subject to certification under 10CFR 72 even though it is not a device for storing spent fuel.

The HI-TRAC VW body is a double-walled steel cylinder that constitutes its structural system. Contained between the two steel shells is an intermediate lead cylinder. Integral to the exterior of the HI-TRAC VW body outer shell is a water jacket that acts as a radiation barrier. The HI-TRAC VW is not a pressure vessel since it contains penetrations and openings. The structural steel components of the HI-TRAC VW are subject to the stress limits of the ASME Code, Section III, Subsection NF, Class 3 for normal and off-normal loading conditions.

Since the HI-TRAC VW may serve as an MPC carrier, its lifting attachments (or interfacing lift points) are designed to meet the design safety factor requirements of NUREG-0612 [3.1.1] and Regulatory Guide 3.61 [1.0.2] for single-failure-proof lifting equipment.

3.1.2 Design Criteria and Applicable Loads

Principal design criteria for normal, off-normal, and accident/environmental events are discussed in Section 2.2. In this section, the loads, load combinations, and the structural performance of the HI-STORM FW system under the required loading events are presented.

Consistent with the provisions of NUREG-1536, the central objective of the structural analysis presented in this chapter is to ensure that the HI-STORM FW system possesses sufficient structural capability to withstand normal and off-normal loads and the worst case loads under natural phenomenon or accident events. Withstanding such loadings implies that the HI-STORM FW system will successfully preclude the following:

- unacceptable risk of criticality
- unacceptable release of radioactive materials
- unacceptable radiation levels
- impairment of ready retrievability of the SNF

The above design objectives for the HI-STORM FW system can be particularized for individual components as follows:

- The objectives of the structural analysis of the MPC are to demonstrate that:

    i. Confinement of radioactive material is maintained under normal, off-normal, accident conditions, and natural phenomenon events.

The key attributes of the MPC finite element models (implemented in ANSYS) are:

i. The finite element layout of the Enclosure Vessel is pictorially illustrated in Figure 3.4.1. The finite element discretization of the Enclosure Vessel is sufficiently detailed to accurately articulate the primary membrane and bending stresses as well as the secondary stresses at locations of gross structural discontinuity, particularly at the MPC shell to baseplate juncture. This has been confirmed by comparing the ANSYS stress results with the analytical solution provided in [3.4.16] (specifically Cases 4a and 4b of Table 31) for the discontinuity stress at the junction between a cylindrical shell and a flat circular plate under internal pressure (100 psig). The two solutions agree within 3% indicating that the finite element mesh for the Enclosure Vessel is adequately sized. Table 3.1.14 summarizes the key input data that is used to create the finite element model of the Enclosure Vessel.

ii. The Enclosure Vessel shell, baseplate, and upper and lower lids are meshed using SOLID185 elements. The MPC lid-to-shell weld and the reinforcing fillet weld at the shell-to-baseplate juncture are also explicitly modeled using SOLID185 elements (see Figure 3.4.1).

iii. Consistent with the drawings in Section 1.5, the MPC lid is modeled as two separate plates, which are joined together along their perimeter edge. The upper lid is conservatively modeled as 4.5" thick, which is less than the minimum thickness specified on the licensing drawing (see Section 1.5). "Surface-to-surface" contact is defined over the interior interface between the two lid plates using CONTA173 and TARGE170 contact elements.

iv. The materials used to represent the Enclosure Vessel are assumed to be isotropic and are assigned linear elastic material properties based on the Alloy X material data provided in Section 3.3. The Young's modulus value varies throughout the model based on the applied temperature distribution, which is shown in Figure 3.4.27 and conservatively bounds the temperature distribution for the maximum length MPC as determined by the thermal analyses in Chapter 4 for short-term normal operations.

v. The fuel basket models (Figures 3.4.12A, 3.4.12B, 3.4.12C and 3.4.12D), which are implemented in LS-DYNA, are assembled from intersecting plates per the licensing drawings in Section 1.5, include all potential contacts and allow for relative rotations between intersecting plates. The fuel basket plates are modeled in LS-DYNA using thick shell elements, which behave like solid elements in contact, but can also accurately simulate the bending behavior of the fuel basket plates. To ensure numerical accuracy, full integration thick shell elements with 10 through-thickness integration points are used. This modeling approach is consistent with the approach taken in [3.1.10] to qualify the F-32 and F-37 fuel baskets.

vi. In LS-DYNA, the fuel basket plates are represented by their applicable nonlinear elastic-plastic true stress-strain relationships in the same manner as the steel members of the HI-STORM FW overpack (see Subsection 3.1.3.1). Table 3.1.13 provides the values of K and

Table 3.1.1

GOVERNING CASES AND AFFECTED COMPONENTS

Case	**Loading Case I.D. from Tables 2.2.6, 2.2.7 and 2.2.13**	**Loading Event**	**Affected Components**			**Objective of the Analysis**	**For additional discussion, refer to Subsection**
			HI-STORM	MPC	HI-TRAC		
1	AD	Moving Flood Moving Floodwater with loaded HI-STORM on the pad.	X	—	—	Determine the flood velocity that will not overturn the overpack.	2.2.3
2.	AE	Design Basis Earthquake (DBE) Loaded HI-STORMs arrayed on the ISFSI pad subject to ISFSI's DBE	X	X	—	Determine the maximum magnitude of the earthquake that meets the acceptance criteria of 2.2.3(g).	2.2.3
3	AC	Tornado Missile A large, medium or small tornado missile strikes a loaded HI-STORM on the ISFSI pad or HI-TRAC.	X	X	X	Demonstrate that the acceptance criteria of 2.2.3(e) will be met.	2.2.3
4	AA	Non-Mechanistic Tip-Over A loaded HI-STORM is assumed to tip over and strike the pad.	X	X	—	Satisfy the acceptance criteria of 2.2.3(b).	2.2.3
5	NB	Design, Short-Term Normal and Off-Normal Internal Pressure MPC under the Design, Short-term normal and Off-normal Internal Pressure	—	X	—	Demonstrate that the MPC meets "NB" stress intensity limits.	2.2.1
6	NB	Maximum Internal Pressure Under the Accident Condition MPC under the accident condition internal pressure (from Table 2.2.1)	—	X	—	Demonstrate that the Level D stress intensity limits are met.	2.2.1

Table 3.1.7

DESIGN, LEVELS A AND B: STRESS INTENSITY

Code: ASME NB
Material: Alloy X
Service Conditions: Design, Levels A and B (Normal and Off-Normal)
Item: Stress Intensity

Temp. (Deg. F)	**Classification and Numerical Value**					
	S_m	**P_m†**	**P_L†**	**$P_L + P_b$†**	**$P_L + P_b + Q$††**	**P_e††**
-20 to 100	20.0	20.0	30.0	30.0	60.0	60.0
200	20.0	20.0	30.0	30.0	60.0	60.0
300	20.0	20.0	30.0	30.0	60.0	60.0
400	18.6	18.6	27.9	27.9	55.8	55.8
500	17.5	17.5	26.3	26.3	52.5	52.5
600	16.5	16.5	24.75	24.75	49.5	49.5
650	16.0	16.0	24.0	24.0	48.0	48.0
700	15.6	15.6	23.4	23.4	46.8	46.8
750	15.2	15.2	22.8	22.8	45.6	45.6
800	14.8	14.8	22.2	22.2	44.4	44.4

Notes:

1. S_m = Stress intensity values per Table 2A of ASME II, Part D for austenitic stainless steels of Alloy X and Appendix 1.A for duplex stainless steel of Alloy X.
2. Alloy X S_m values are the lowest values for each of the candidate materials at corresponding temperature.
3. Stress classification per NB-3220.
4. Limits on values are presented in Table 2.2.10.
5. P_m, P_L, P_b, Q, and P_e are defined in Table 3.1.10.
6. Allowable primary stress intensities under Level B Service Loadings shall be 110% of allowable primary stress intensities under Level A Service Loading per NB-3223.

† Evaluation required for Design condition only.
†† Evaluation required for Levels A, B conditions only. P_e not applicable to vessels.

Table 3.1.10

ORIGIN, TYPE AND SIGNIFICANCE OF STRESSES IN THE HI-STORM FW SYSEM

Symbol	Description	Notes
P_m	Primary membrane stress	Excludes effects of discontinuities and concentrations. Produced by pressure and mechanical loads. Primary membrane stress develops in the MPC Enclosure Vessel shell. Limits on P_m exist for design, normal (Level A), off-normal (Level B), and accident (Level D) service conditions.
P_L	Local membrane stress	Considers effects of discontinuities but not concentrations. Produced by pressure and mechanical loads, including earthquake inertial effects. P_L develops in the MPC Enclosure Vessel wall due to impact between the overpack guide tubes and the MPC (near the top of the MPC) under an earthquake (Level D condition) or non-mechanistic tip-over event. However, because there is no Code limit on P_L under Level D event, a limit on the local strain consistent with the approach in the HI-STORM 100 docket is used (see Subsection 3.4.4.1.4).
P_b	Primary bending stress	Component of primary stress proportional to the distance from the centroid of a solid section. Excludes the effects of discontinuities and concentrations. Produced by pressure and mechanical loads, including earthquake inertial effects. Primary bending stress develops in the top lid and baseplate of the MPC, which is a pressurized vessel. Lifting of the loaded MPC using the so-called "lift cleats" also produces primary bending stress in the MPC lid. Similarly, the top lid of the HI-STORM FW module, a plate-type structure, withstands the snow load (Table 2.2.8) by developing primary bending stress.
P_e	Secondary expansion stress	Stresses that result from the constraint of free-end displacement. Considers effects of discontinuities but not local stress concentration (not applicable to vessels). It is shown that there is no interference between component parts due to free thermal expansion. Therefore, P_e does not develop within any HI-STORM FW component.
Q	Secondary membrane plus bending stress	Self-equilibrating stress necessary to satisfy continuity of structure. Occurs at gross structural discontinuities. Can be caused by pressure, mechanical loads, or differential thermal expansion. The junction of MPC shell with the baseplate and top lid locations of gross structural discontinuity, where secondary stresses develop as a result of internal pressure. Secondary stresses would also develop at the two extremities of the MPC shell if a thermal gradient were to exist. However, because the top and bottom regions of the MPC cavity also serve as the top and bottom plenums, respectively, for the recirculating helium, the temperature field in the regions of gross discontinuity is essentially uniform, and as a result, the thermal stress adder is insignificant and neglected (see Paragraph 3.1.2.5).
F	Peak stress	Increment added to primary or secondary stress by a concentration (notch), or, certain thermal stresses that may cause fatigue but not distortion. Because fatigue is not a credible source of failure in a passive system with gradual temperature changes, fatigue damage is not computed for HI-STORM FW components.

Table 3.1.14 KEY INPUT DATA FOR ANSYS MODEL OF MPC ENCLOSURE VESSEL	
Item	Value
Overall Height of MPC	195 in (for maximum length BWR fuel) 213 in (for maximum length PWR fuel)
Outside diameter of MPC	75.75 in
MPC upper lid thickness	4.5 in
MPC lower lid thickness	4.5 in
MPC shell thickness	0.5 in
MPC baseplate thickness	3.0 in
Material	Alloy X
Ref. temperature for material properties	Figure 3.4.27 (implemented in ANSYS) Table 3.1.13 (implemented in LS-DYNA)

Table 3.2.1 OPTIMIZED MPC, HI-TRAC, AND HI-STORM HEIGHT DATA FOR A SPECIFIC UNIRRADIATED FUEL LENGTH, ℓ †	
MPC Cavity Height, c	$\ell + \Delta$‡
MPC Height (including top lid, excluding closure ring), h	c + 12”
HI-TRAC VW Cavity Height	h + 1”
HI-TRAC VW Total Height*	h + 6.5”
HI-STORM FW Cavity Height	h + 3.5”
HI-STORM FW Body Height (height from the bottom of the HI-STORM FW to the top surface of the shear ring at the top of the HI-STORM FW body)	h + 4.5”
HI-STORM FW Height (loaded over the pad)	h + 27”

*Applicable to standard HI-TRAC VW and HI-TRAC VW Versions V and V2 casks.

† Fuel Length, ℓ , shall be based on the fuel assembly length with or without a damaged fuel container (DFC). Users planning to store fuel in DFCs shall adjust the length ℓ to include the additional height of the DFC. The maximum additional height for the DFC shall be 5”. Note that users who plan to store any fuel in a DFC will need to utilize a system designed for the additional length and will need to use fuel shims (if required) to reduce the gap between the fuel without a DFC and the enclosure cavity to approximately 1.5-2.5 inches.

‡ Δ shall be selected as 1.5” < Δ < 2.0” so that c is an integral multiple of 1/2 inch (add 1.5” to the fuel length and round up to the nearest 1/2” or full inch).

Table 3.2.2 LIMITING PARAMETERS			
	Item	PWR	BWR
1.	Minimum fuel assembly length, inch	150	171
2.	Maximum fuel assembly length, inch	199.2	181.5[3]
3a.	Minimum thickness of the lead cylinder in the lowest weight HI-TRAC VW (standard and Version V), inch	2.75 (MPC-37)	2.50
3b.	Minimum thickness of the lead in the HI-TRAC VW (standard and Version V), inch	3.25 (MPC-32ML)	-
4.	Maximum thickness of the lead cylinder (all HI-TRAC VW versions), inch	4.25	4.25
5.	Nominal (radial) thickness of the water in the external jacket of HI-TRAC VW (standard and Version V), inch	4.75	4.75
6.	Minimum thickness of the lead cylinder in HI-TRAC VW Version V2, inch	2.625	2.625
7.	Minimum thickness of the Holtite cylinder in HI-TRAC VW Version V2, inch	4	4

[3] Maximum fuel assembly length for the BWR fuel assembly refers to the maximum fuel assembly length plus an additional 5” to account for a Damage Fuel Container (DFC).

Table 3.2.4

HI-TRAC VW WEIGHT DATA† (COMPUTED NOMINAL VALUES)

Item	BWR Fuel Based on length below			PWR Fuel Based on length below (see Note 1)		
	Reference	**Shortest from Table 3.2.2**	**Longest from Table 3.2.2**	**Reference**	**Shortest from Table 3.2.2**	**Longest from Table 3.2.2**
HI-TRAC VW Body (no Bottom Lid, water jacket empty)	84,000	81,700	86,200	85,200	78,000	99,600
HI-TRAC VW Bottom Lid[NOTE 2]	13,000	13,000	13,000	13,000	13,000	13,000
MPC with Basket	36,100	35,400	36,600	36,500	32,600	40,500
Fuel Weight (assume 50% with control components or channels, as applicable)	66,800 (750 lb per assembly average)	64,600 (725 lb per assembly average)	71,200 (800 lb per assembly average)	62,000 (1,675 lb per assembly average)	53,700 (1,450 lb per assembly average)	69,400 (1,875 lb per assembly average)
Water in the Annulus	600	600	600	600	600	700
Water in the Water Jacket	8,800	8,500	9,000	8,400	7,600	9,900
Displaced Water Mass by the Cask in the Pool (Excludes MPC)	18,900	18,400	19,400	18,600	17,500	21,600

Notes: 1: HI-TRAC VW weight data for the longest PWR fuel is bounding for the HI-TRAC carrying the MPC-32ML.
2: Listed weight is bounding for all HI-TRAC VW versions.

† Tabulated weights are for standard HI-TRAC VW. For HI-TRAC VW Versions V and V2, weights may be computed using information provided in Section 3.2 and on licensing drawings in Section 1.5.

Table 3.2.6

HI-TRAC VW OPERATING WEIGHT DATA FOR REFERENCE FUEL (See Note 1)

Scenario			**HI-TRAC VW Weight in Kilo-Pounds (See Notes 2 & 3)**	
Water in the MPC	**Water in the Water Jacket**	**Cask in (pool) Water/Air**	**Ref. PWR Fuel**	**Ref. BWR Fuel**
Yes	Yes	Water	167.7	173.3
Yes	Yes	Air	215.5	222.9
Yes	No	Water	159.4	164.6
No	No	Water	143.7	147.9
No	Yes	Air	199.9	206.2
No	No	Air	191.5	197.5

Notes:

1) Tabulated weights are for standard HI-TRAC VW. For HI-TRAC VW Versions V and V2, weights can be computed using information provided in Section 3.2 and on licensing drawings in Section 1.5.
2) Weights above include the weight of the fuel assembly alone and do not include any additional weight for non-fuel hardware or damaged fuel containers.
3) Add 4,000 lbs for weight of the lift yoke.

Table 3.2.7 LOCATION OF C.G. WITH RESPECT TO THE CENTERPOINT ON THE EQUIPMENT'S GEOMETRIC CENTERLINE			
	Item	**Radial eccentricity (dimensionless)** [5]**, ϕ**	**Vertical eccentricity (dimensionless), Above (+)* or Below (-), ψ (See Note 1)**
1.	Empty HI-STORM FW with lid installed	2.0	±3.0
2.	Empty HI-STORM FW without top lid	2.0	±3.0
3.	HI-STORM FW with fully loaded stored MPC without top lid	2.0	±2.0
4.	HI-STORM FW with lid and a fully loaded MPC	2.0	±3.0
5.	HI-TRAC VW with Bottom lid and loaded MPC	2.0	±2.0
6.	Empty HI-TRAC VW without bottom lid	2.0	±2.0

Notes:

1) Tabulated vertical eccentricities are applicable to standard HI-TRAC VW and to Versions V and V2. For HI-TRAC VW Versions V and V2, additional cask C.G. height information is provided on the licensing drawings in Section 1.5.

[5] ϕ and Ψ are dimension values as explained in Section 3.2.

Table 3.2.8

BOUNDING WEIGHTS FOR STRUCTURAL ANALYSES
(Height from Tables 3.2.1 and 3.2.2)

	Case	**Purpose**	**Assumed Weight (Kilo-pounds)**
1.	Loaded HI-STORM FW on the pad containing maximum length/weight fuel and 200 lb/cubic feet concrete – maximum possible weight scenario	Sizing and analysis of lifting and handling locations and cask stability analysis under overturning loads such as flood and earthquake	425.7
2.	Loaded HI-STORM FW on the pad with 150 lb concrete, shortest length MPC	Stability analysis under missile strike	285.7
3.	Loaded HI-TRAC VW with maximum length fuel and maximum lead and water shielding	Analysis for NUREG-0612 compliance of lifting and handling locations (TALs and Trunnions)	270.0 NOTE 1
4.	Loaded HI-TRAC VW with shortest length MPC and minimum lead and water shielding	Stability analysis under missile strike	183.5 NOTE 1
5.	Loaded MPC containing maximum length/weight fuel – maximum possible weight scenario	Analysis for NUREG-0612 compliance of lifting and handling locations (TALs)	116.4

NOTE 1: The listed weight conservatively bounds all HI-TRAC VW versions (maximum or minimum loaded weight, as applicable).

3.3 MECHANICAL PROPERTIES OF MATERIALS

This section provides the mechanical properties used in the structural evaluation. The properties include yield stress, ultimate stress, modulus of elasticity, Poisson's ratio, weight density, and coefficient of thermal expansion. Values are presented for a range of temperatures which envelopes the maximum and minimum temperatures under all service conditions applicable to the HI-STORM FW system components.

The materials selected for use in the MPC, HI-STORM FW overpack, and HI-TRAC VW transfer cask are presented on the drawings in Section 1.5. In this chapter, the materials are divided into two categories, structural and nonstructural. Structural materials are materials that act as load bearing members and are, therefore, significant in the stress evaluations. Materials that do not support mechanical loads are considered nonstructural. For example, the HI-TRAC VW inner shell is a structural material, while the lead between the inner and outer shell is a nonstructural material. For nonstructural materials, the principal property that is used in the structural analysis is weight density. In local deformation analysis, however, such as the study of penetration from a tornado-borne missile, the properties of lead in HI-TRAC VW and plain concrete in HI-STORM FW are included.

3.3.1 Structural Materials

a. Alloy X

A hypothetical material termed Alloy X is defined for the MPC pressure retaining boundary. The material properties of Alloy X are the least favorable values from the set of candidate alloys. The purpose of a least favorable material definition is to ensure that all structural analyses are conservative, regardless of the actual MPC material. For example, when evaluating the stresses in the MPC, it is conservative to work with the minimum values for yield strength and ultimate strength. This guarantees that the material used for fabrication of the MPC will be of equal or greater strength than the hypothetical material used in the analysis.

Table 3.3.1 lists the numerical values for the material properties of Alloy X versus temperature. These values, taken from the ASME Code, Section II, Part D [3.3.1] and Appendix 1.A, are used in all structural analyses. As is shown in Chapter 4, the maximum metal temperature for austenitic stainless steel grades of Alloy X used at or within the Confinement Boundary remains below 1000°F under all service modes and the maximum temperature of duplex stainless steel (UNS S31803) grade of Alloy X used for confinement boundary does not exceed 600°F under any condition. As shown in ASME Code Case N-47-33 (Class 1 Components in Elevated Temperature Service, 2007 Code Cases, Nuclear Components), the strength properties of austenitic stainless steels do not change due to exposure to 1000°F temperature for up to 10,000 hours. In addition, per ASME Code Case N-635-1 (Use of 22Cr-5Ni-3Mo-N (Alloy UNS S31803) Forgings, Plate, Bar, Welded and Seamless Pipe, and/or Tube, Fittings, and Fusion Welded Pipe with Additional of Filler Metal, Classes 1, 2, and 3, Section III, Division 1), the maximum permissible temperature

for duplex stainless steel grade of Alloy X is 600°F. Therefore, there is no risk of a significant effect on the mechanical properties of the confinement or boundary material during the short time duration loading. A further description of Alloy X, including the materials from which it is derived, is provided in Appendix 1.A.

Two properties of Alloy X that are not included in Table 3.3.1 are weight density and Poisson's ratio. These properties are assumed constant for all structural analyses, regardless of temperature. The values used are shown in the table below.

PROPERTY	VALUE
Weight Density (lb/in^3)	0.290
Poisson's Ratio	0.30

b. Metamic-HT

Metamic-HT is a composite of nano-particles of aluminum oxide (alumina) and finely ground boron carbide particles dispersed in the metal matrix of pure aluminum. Metamic-HT is the principal constituent material of the HI-STORM FW fuel baskets. Metamic-HT neutron absorber is an enhanced version of the Metamic (classic) product widely used in dry storage fuel baskets [3.1.4, 3.3.2] and spent fuel storage racks [1.2.11]. The enhanced properties of Metamic-HT derive from the strengthening of its aluminum matrix with ultra fine-grained (nano-particle size) alumina (Al_2O_3) particles that anchor the grain boundaries. The strength properties of Metamic-HT have been characterized through a comprehensive test program, and Minimum Guaranteed Values suitable for structural design are archived in [Table 1.2.8]. The Metamic-HT metal matrix composite thus exhibits excellent mechanical strength properties (notably creep resistance) in addition to the proven thermal and neutron absorption properties that are intrinsic to borated aluminum materials. The specific Metamic-HT composition utilized in this FSAR has 10% (min.) B_4C by weight.

Section 1.2.1.4.1 provides detailed information on Metamic-HT. Mechanical properties are provided in Table 1.2.8

c. Carbon Steel, Low-Alloy and Nickel Alloy Steel

The carbon steels in the HI-STORM FW system are SA516 Grade 70, SA515 Grade 70, and SA36. The low alloy steel is SA350-LF3. The material properties of SA516 Grade 70 and SA515 Grade 70 are shown in Tables 3.3.2. The material properties of SA350-LF2 and SA350-LF3 are given in Table 3.3.3. The material properties of SA36 are shown in Table 3.3.6.

Table 3.3.1

ALLOY X MATERIAL PROPERTIES

Temp. (Deg. F)	**Alloy X**			
	S_y	**S_u†**	**α**	**E**
-40	30.0	75.0 (70.0)	--	28.88
100	30.0	75.0 (70.0)	8.6	28.12
150	27.5	73.0 (68.1)	8.8	27.81
200	25.0	71.0 (66.3)	8.9	27.5
250	23.7	68.6 (64.05)	9.1	27.25
300	22.4	66.2 (61.8)	9.2	27.0
350	21.55	65.3 (60.75)	9.4	26.7
400	20.7	64.4 (59.7)	9.5	26.4
450	20.05	63.9 (59.45)	9.6	26.15
500	19.4	63.4 (59.2)	9.7	25.9
550	18.85	63.35 (59.1)	9.8	25.6
600	18.3	63.3 (59.0)	9.8	25.3
650	17.8	62.85 (58.6)	9.9	25.05
700	17.3	62.4 (58.3)	10.0	24.8
750	16.9	62.1 (57.9)	10.0	24.45
800	16.5	61.7 (57.6)	10.1	24.1

Definitions:

S_y = Yield Stress (ksi)
α = Mean Coefficient of thermal expansion (in./in. per degree F x 10^{-6})
S_u = Ultimate Stress (ksi)
E = Young's Modulus (psi x 10^6)

Notes:

1. Source for S_y values is Table Y-1 of [3.3.1] for austenitic stainless steels of Alloy X and Appendix 1.A for duplex stainless steel of Alloy X.
2. Source for S_u values is Table U of [3.3.1] for austenitic stainless steels of Alloy X and Appendix 1.A for duplex stainless steel of Alloy X.
3. Source for α values is Table TE-1 of [3.3.1] for austenitic stainless steels of Alloy X. Values of α for duplex stainless steel grade of Alloy X can be obtained from Appendix 1.A.
4. Source for E values is material group G in Table TM-1 of [3.3.1] for austenitic stainless steels of Alloy X and Appendix 1.A for duplex stainless steel of Alloy X.
5. Minimum values of S_y, S_u and E from all candidate Alloy X materials are listed.
6. Duplex stainless steel grade of Alloy X is only used in fabrication of MPC confinement boundary components and its use is limited to 600 °F per Appendix 1.A.

3.4 GENERAL STANDARDS FOR CASKS

3.4.1 Chemical and Galvanic Reactions

Chapter 8 provides discussions on chemical and galvanic reactions, material compatibility and operating environments. Section 8.12 provides a summary of compatibility all HI-STORM FW system materials with the operating environment.

3.4.2 Positive Closure

There are no quick-connect/disconnect ports in the Confinement Boundary of the HI-STORM FW system. The only access to the MPC is through the storage overpack lid, which weighs over 10 tons (see Table 3.2.5). The lid is fastened to the storage overpack with large bolts. Inadvertent opening of the storage overpack is not feasible because opening a storage overpack requires mobilization of special tools and heavy-load lifting equipment.

3.4.3 Lifting Devices

3.4.3.1 Identification of Lifting Devices and Required Safety Factors

The safety of the lifting and handling operations involving HI-STORM FW system components is considered in this section. In particular, the compliance of the appurtenances integral to the cask components used in the lifting operations to NUREG-0612, Reg. Guide 3.61, and the ASME Code is evaluated.

The following design features of Threaded Anchor Locations (TALs) or Interfacing Lift Points (ILPs) are relevant to their stress analysis:

i. All TALs consist of vertically tapped penetrations in the solid metal blocks. For example, the HI-STORM FW overpack body and overpack lid (like all HI-STORM models) have tapped holes in the “anchor blocks” that are engaged for lifting. The loaded MPC is lifted at eight threaded penetrations in the top lid as depicted on the licensing drawings in Section 1.5. However, the MPC lifting analysis in this section conservatively takes credit for only 4 TALs. Likewise, eight vertically tapped holes in the top flange provide the interfacing lift points for HI-TRAC VW transfer cask.

   Specifically, trunnions are not used in the HI-STORM FW system components because of the radiation streaming paths introduced by their presence and high stresses produced at the trunnion’s root by the cantilever action during lifting.

ii. Operations involving loaded HI-STORM FW cask components involve handling evolutions in the vertical orientation (with the rare handling exception of the transfer cask as described in Subsection 4.5.1). While the lifting devices used by a specific nuclear site shall be custom engineered to meet the architectural constraints of the site, all lifting devices are required to

engage the tapped connection points using a vertical tension member such as a threaded rod. Thus, the loading on the cask during lifting is purely vertical.

iii. There are no rotation trunnions in the HI-STORM FW components. All components are upended and downended at the nuclear plant site using "cradles" of the same design used at the factory (viz., the Holtec Manufacturing Division) during their manufacturing.

The stress analysis of the HI-STORM FW components, therefore, involves applying a vertical load equal to D*/n at each of the n TAL locations. Thus, for the case of the HI-STORM FW overpack, n = 4 (four "anchor blocks" as shown in the licensing drawings in Section 1.5).

The stress limits during a lift for individual components are as follows:

i. Lift points (MPC and HI-TRAC VW): The stress in the TALs (or ILPs) and lifting trunnions must be the lesser of 1/3rd of the material's yield strength and 1/10th of its ultimate strength pursuant to NUREG-0612 and Reg. Guide 3.61.

ii. Lift points (HI-STORM FW): The stress in the threads must be less than 1/3rd of the material's yield strength pursuant to Reg. Guide 3.61. This acceptance criterion is consistent with the stress limits used for the lifting evaluation of the HI-STORM 100 overpack in [3.1.4].

iii. Balance of the components: The maximum primary stresses (membrane and membrane plus bending) must be below the Level A service condition limit using ASME Code, Section III, Subsections NB and NF (2007 issues), as applicable, as the reference codes.

To incorporate an additional margin of safety in the reported safety factors, the following assumptions are made:

i. As the system description in Chapter 1 indicates, the heights of the MPCs, HI-STORM FW and HI-TRAC VW are variable. Further, the quantity of lead shielding installed in HI-TRAC VW and the density of concrete can be increased to maximize shielding. All lift point capacity evaluations are performed using the maximum possible weights for each component, henceforth referred to as the "heaviest weight configuration". Because a great majority of site applications will utilize lower weight components (due to shorter fuel length and other architectural limitations such as restricted crane capacity or DAS slab load bearing capacity, or lack of floor space in the loading pit), there will be an additional margin of safety in the lifting point's capacity at specific plant sites.

ii. All material yield strength and ultimate strength values used are the minimum from the ASME Code. Actual yield and tensile data for manufactured steel usually have up to 20% higher values.

The stress analysis of the lifting operation is carried out using the load combination D+H, where H is the "handling load". The term D denotes the dead load. Quite obviously, D must be taken as

using ANSYS [3.4.1]. The finite element model, which is shown in Figure 3.4.1, is ¼ -symmetric, and it represents the maximum height MPC as defined by Tables 3.2.1 and 3.2.2. The maximum height MPC is analyzed because it is also the heaviest MPC. The key attributes of the ANSYS finite element model of the MPC Enclosure Vessel are described in Subsection 3.1.3.2.

The loads are statically applied to the finite element model in the following manner. The self-weight of the Enclosure Vessel is simulated by applying a constant acceleration of 1.15g in the vertical direction. The apparent dead weight of the stored fuel inside the MPC cavity (which includes a 15% dynamic amplifier) is accounted for by applying a uniformly distributed pressure of 23.1 psi on the top surface of the MPC baseplate. The amplified weight of the fuel basket and the fuel basket shims is applied as a ring load on the MPC baseplate at a radius equal to the half-width of the fuel basket cross section. The magnitude of the ring load is equal to 101.8 lbf/in. All internal surfaces of the MPC storage cavity are also subjected to a bounding normal condition internal pressure of 120 psig, which exceeds the normal operating pressures per Tables 4.4.5 and 4.5.5. Finally, the model is constrained by fixing one node on the top surface of the ¼-symmetric MPC lid, which coincides with the TAL. Symmetric boundary conditions are applied to the two vertical symmetry planes. The boundary conditions and the applied loads are graphically depicted in Figure 3.4.28.

The resulting stress intensity distribution in the Enclosure Vessel under the applied handling loads is shown in Figure 3.4.2. Figures 3.4.29 and 3.4.30 plot the thru-thickness variation of the stress intensity at the baseplate center and at the baseplate-to-shell juncture, respectively. The maximum primary stress intensities in the MPC Enclosure Vessel are compared with the applicable stress intensity limits from Subsection NB of the ASME Code [3.4.4]. The allowable stress intensities are conservatively taken at 500°F for the MPC shell, 600°F for the MPC lids, 450°F for the MPC baseplate, and 450°F at the MPC baseplate-to-shell juncture. These temperatures bound the operating temperatures for these parts under normal operating conditions (Tables 4.4.3 and 4.5.2). The maximum calculated stress intensities and the corresponding safety factors are summarized in Table 3.4.1.

The shear stress in the MPC lid-to-shell weld under normal handling conditions is independently calculated, as shown below.

Per Table 3.2.8, the maximum weight of a loaded MPC is

W_{MPC} = 116,400 lb

The diameter and weight of the MPC lid assembly are

D = 74.375 in

W_{lid} = 11,500 lb

From Table 2.2.1, the bounding pressure inside the MPC cavity under normal operating conditions is

P = 120 psig

Thus, the total force acting on the MPC lid-to-shell weld is

$$F = 1.15 \cdot (W_{MPC} - W_{lid}) + P \cdot \left(\frac{\pi \cdot D^2}{4} \right) = 641{,}980 lb$$

which includes a 15% dynamic amplifier. The MPC lid-to-shell weld is a ¾" partial groove weld, which has an effective area equal to

$$A = \pi \cdot D \cdot \left(t_w - \frac{1}{8} in \right) \cdot 0.8 = 116.8 in^2$$

where t_w is the weld size (= 0.75in). The calculated weld area includes a strength reduction factor of 0.8 per ISG-15 [3.4.17]. Thus, the average shear stress in the MPC lid-to-shell weld is

$$\tau = \frac{F}{A} = 5{,}495 psi$$

The MPC Enclosure Vessel is made from Alloy X material, whose mechanical properties are listed in Table 3.3.1. Based on a bounding normal condition temperature of 600ºF (Tables 4.4.3 and 4.5.2), and assuming that the weld strength is equal to the base metal ultimate strength, the allowable shear stress in the weld under normal conditions is

$$\tau_a = 0.3 \times S_u = 18{,}990 psi$$

Therefore, the safety factor against shear failure of the MPC lid-to-shell weld is

$$SF = \frac{\tau_a}{\tau} = 3.46$$

b. Heaviest Weight HI-TRAC VW Lift

The HI-TRAC VW (including Versions V and V2) transfer cask is at its heaviest weight when it is being lifted out of the loading pit with the MPC full of fuel and water and the MPC lid lying on it for shielding protection (Table 3.2.8). The threaded lift points provide for the anchor locations for lifting.

The stress analysis of the transfer cask consists of two steps:

i. A strength evaluation of the tapped connection points to ensure that it will not undergo yielding at 3 times D* and failure at 10 times D*.

ii. A strength evaluation of the HI-TRAC VW (including Versions V and V2) vessel using

strength of materials formula to establish the stress field under D*. The primary membrane plus primary bending stresses throughout the HI-TRAC VW body and the bottom lid shall be below the Level A stress limits for "NF" Class 3 plate and shell structures.

Case (i): Stress Analysis of HI-TRAC VW Threaded Anchor Locations (TALs)

Per Table 3.2.8, the maximum lifted weight of a loaded HI-TRAC VW is

D = 270,000 lb

Per the above, the apparent dead load of the HI-TRAC VW during handling operations is

D* = 1.15 x D = 310,500 lb

The HI-TRAC VW top flange has 8 TALs as shown on the drawing in Section 1.5. Therefore, the lifted load per TAL is equal to

$$\frac{D*}{8} = 38{,}813 lb$$

Per Machinery's Handbook [3.4.12], the shear area of the internal threads (2 1/4" - 4.5 UNC, 2.25" minimum thread engagement length) at each TAL is conservatively calculated using Class 1 thread properties as

A = 11.46 in^2

Finally, the shear stress on the TALs is computed as follows

$$\tau = \frac{D^*}{8A} = 3{,}387\ psi$$

The HI-TRAC VW top flange is made from SA-350 LF3 material, whose mechanical properties are listed in Table 3.3.3. Based on a design temperature of 400ºF (Table 2.2.3), and assuming the yield and ultimate strengths in shear to be 60% of the corresponding tensile strengths, the allowable stress in the threads is determined as follows

$$Sa = 0.6 \times \min\left(\frac{Sy}{3}, \frac{Su}{10}\right) = 4{,}200\, psi$$

Therefore, the safety factor against shear failure of the TALs in the HI-TRAC VW top flange is

$$SF = \frac{S_a}{\tau} = 1.24$$

The calculation above is applicable to the TALs (or ILPs) in the HI-TRAC VW Versions V and V2 top flange.

Case (ii): Stress Analysis of HI-TRAC VW Body

The stress analysis of the HI-TRAC VW steel structure during lifting operations is performed using strength of materials. All structural members in the load path are evaluated for the maximum lifted weight (Table 3.2.8). In particular, the following stresses are calculated:

- the shear stress in the welds between the top flange and the inner and outer shells
- the primary membrane stress in the inner and outer shells
- the tensile stress in the bottom lid bolts
- the primary bending stress in the bottom lid

To determine the bending stress in the bottom lid, the weight of the loaded MPC (Table 3.2.8) plus the weight of the water inside the HI-TRAC VW cavity (Table 3.2.4) is applied as a uniformly distributed pressure on the top surface of the lid. The bending stress is calculated at the center of the bottom lid assuming that the lid is simply supported at the bolt circle diameter. The calculated stresses are compared with the Level A stress limits for "NF" Class 3 plate and shell structures. The detailed calculations are documented in [3.4.13]. Table 3.4.2 summarizes the stress analysis results for the HI-TRAC VW steel structure under the maximum lifted load.

For HI-TRAC VW Versions V and V2 bodies, the same approach used to evaluate HI-TRAC VW body is used. Since the inputs (weights, dimensions and temperature dependent material properties) used in the calculation are conservative for all cask designs, the results in Table 3.4.2 for the shear stress in the welds between the top flange and the inner and outer shells, and the primary membrane stress in the inner and outer shells are bounding for HI-TRAC VW Versions V and V2. The results from the primary bending stress analysis in the bottom lid of HI-TRAC VW Versions V and V2 are presented in Tables 3.4.2A and 3.4.2B, respectively. The material for bottom lid bolts is different than standard HI-TRAC VW for HI-TRAC VW Version V. The detailed calculation for bottom lid bolts is documented in [3.4.13]. Table 3.4.2A summarizes the stress analysis results for the HI-TRAC VW Version V bottom lid bolts. The connection between bottom lid and bottom flange is different than standard HI-TRAC VW for HI-TRAC VW Version V2. The detailed calculation for bottom lid connections is documented in [3.4.13]. Table 3.4.2B summarizes the stress analysis results for the HI-TRAC VW Version V2 bottom lid connections.

c. HI-STORM FW Overpack Related Lifts

Two related lift conditions are:

i. HI-STORM FW loaded with the heaviest MPC and closure lid installed being lifted (heaviest weight configuration).

ii. HI-STORM FW lid being lifted (heaviest weight configuration)

missile is not included in the total post-impact weight.

vii. Planar motion of the cask is assumed; any loads from out-of-plane wind forces are neglected.

viii. The drag coefficient for a cylinder in turbulent cross flow is used.

ix. The missile and wind loads are assumed to be perfectly aligned in direction.

The results for the post-impact response of the HI-STORM FW overpack and the HI-TRAC VW transfer cask are summarized in Table 3.4.5. The table shows that both casks remain in a vertical upright position (i.e., no overturning) in the aftermath of a large missile impact. The complete details of the tornado wind and large missile impact analyses for the HI-STORM FW overpack and the HI-TRAC VW transfer cask are provided in Appendix 3.A.

The results for the post-impact response of the HI-TRAC VW Versions V and V2 transfer casks are summarized in Tables 3.4.5A and 3.4.5B, respectively. The table shows that the cask remains in a vertical upright position (i.e., no overturning) in the aftermath of a large missile impact. The complete details of the tornado wind and large impact analyses for the HI-TRAC VW Versions V and V2 transfer casks are provided in [3.4.15].

Sliding Analysis

A conservative calculation of the extent of sliding of the HI-STORM FW overpack and the HI-TRAC VW cask due to the impact of a large missile (Table 2.2.5) and tornado wind (Table 2.2.4) is obtained using a common formulation as explained below. A more realistic impact simulation using LS-DYNA, with less bounding assumptions, has been used in Subsection 3.4.4.1.4 to qualify the HI-STORM overpack for a non-mechanistic tip over event. While it is not necessary for demonstrating adequate safety margins for this problem, an LS-DYNA analysis could also be used to calculate the sliding potential of the HI-STORM FW and HI-TRAC VW for a large missile impact. In what follows, both HI-STORM FW and HI-TRAC VW are identified by the generic term "cask".

The principal assumptions that render these calculations for sliding conservative are:

i. The weight of the cask used in the analysis is assumed to be the lowest per Table 3.2.8.

ii. The cask is assumed to absorb the energy of impact purely by sliding. In other words, none of the impact energy is dissipated by the noise from the impact, from local plastic deformation in the cask at the location of impact, or from the potential tipping action of the cask.

iii. The missile impact and high wind, which applies a steady drag force on the cask, are assumed to act synergistically to maximize the movement of the cask.

iv. The cask is assumed to be freestanding on a concrete surface. The interface friction coefficient is assumed to be equal to that endorsed in the HI-STORM 100 FSAR (USNRC Docket No. 72-1014) and adopted here in the HI-STORM FW FSAR.

v. The dynamic effect of the impact is represented by the force-time curve developed in the Bechtel topical report "Design of Structures for Missile Impact" [3.4.9], previously used to qualify the HI-STORM 100 System (USNCR Docket No. 72-1014).

The analysis for sliding under the above assumptions reduces to solving Newton's equation of motion of the form:

$$m\frac{d^2x}{dt^2} = F(t) + F_{dp} - \mu mg$$

where

m: mass of the cask,

t: time coordinate with its origin set at the instant when the sum of the missile impact force and wind drag force overcomes the static friction force,

x: displacement as a function of time coordinate t,

$F(t)$: missile impact force as a function of time (from [3.4.9]),

F_{dp}: drag force from high wind,

μ: interface friction set as 0.53 for freestanding cask on a reinforced concrete pad in Docket No. 72-1014,

g: acceleration due to gravity.

The above second-order differential equation is solved numerically in [3.4.15] for the HI-STORM FW overpack and the HI-TRAC VW transfer cask, and the calculated sliding displacements are summarized in Table 3.4.16.

The calculations for HI-TRAC VW Versions V and V2 transfer casks are performed in [3.4.15] following the same approach used for HI-TRAC VW transfer cask, and the calculated sliding displacements are summarized in Table 3.4.16.

Referring to the spacing dimensions for HI-STORM FW arrays in Table 1.4.1, the minimum space between HI-STORM FW overpacks and the minimum distance of the overpack to the edge of the pad are calculated. The above table demonstrates the HI-STORM FW overpack will not collide with another overpack, and the overpack will not slide off the pad due to the combined effects of a large tornado missile impact and high wind.

No generic limits for sliding are established for HI-TRAC VW and HI-TRAC VW Versions V and

V2 transfer casks. Therefore, the sliding result for the HI-TRAC VW and the HI-TRAC VW Versions V and V2 transfer casks in Table 3.4.16 are strictly informational.

b. Small and Intermediate Missiles

The small and intermediate missiles (Table 2.2.5) are analyzed to determine the extent to which they will penetrate the HI-STORM FW overpack or the HI-TRAC VW and cause potential damage to the MPC Enclosure Vessel. Classical energy balance methods are used to compute the depth of penetration at the following impact locations:

- on the HI-STORM FW outer shell (with concrete backing)
- on the HI-STORM FW lid top plate (with concrete backing)
- on the HI-TRAC VW outer shell (with lead backing)
- on the top surface of the MPC upper lid

The MPC upper lid is analyzed for a direct missile impact because, when the MPC is placed inside the HI-TRAC VW, the MPC lid is theoretically accessible to a vertically downward directed small or intermediate missile.

The following assumptions are made in the analysis:

i. The intermediate missile and the small missile are assumed to be unyielding, and hence the entire initial kinetic energy is assumed to be absorbed by local yielding and denting of the cask surface.

ii. No credit is taken for the missile resistance offered by the HI-TRAC VW water jacket shell. It is assumed a priori that the small and intermediate missiles will penetrate the water jacket shell (with no energy loss). Therefore, in the analysis 100% of the missile impact energy is applied directly to the HI-TRAC VW outer shell.

iii. For missile strikes on the side and top lid of the overpack, the analysis credits the structural resistance in compression offered by the concrete material that backs the outer shell and the lid.

iv. The resistance from the concrete is conservatively assumed to act over an area equal to the target area of impact. In other words, no diffusion of the load is assumed to occur through the concrete.

The analyses documented in Appendix 3.B show that the depth of penetration of the small missile is less than the thinnest section of material on the exterior surface of the HI-STORM FW or the HI-TRAC VW. Therefore, the small missile will dent, but not penetrate, the cask. The 1-inch missile can enter the air inlet/outlet vents in the HI-STORM FW overpack, but geometry prevents a direct impact with the MPC.

For the intermediate missile, the analyses documented in Appendix 3.B show that there will be no

penetration through the concrete surrounding the inner shell of the storage overpack or penetration of the top lid. Likewise, the intermediate missile will not penetrate the lead surrounding the HI-TRAC VW inner shell. Therefore, there will be no impairment to the Confinement Boundary due to tornado-borne missile strikes. Furthermore, since the HI-STORM FW and HI-TRAC VW inner shells are not compromised by the missile strike, there will be no permanent deformation of the inner shells and ready retrievability of the MPC will be assured.

The penetration results for the small and intermediate missile are summarized in Table 3.4.6.

The calculations for HI-TRAC VW Versions V and V2 transfer casks are performed in [3.4.15] following the same approach used for HI-TRAC VW transfer cask, and the conclusions are identical to those for impacts from small and intermediate missiles on HI-TRAC VW. The penetration results for HI-TRAC VW Versions V and V2 transfer casks due to impacts from small and intermediate results are summarized in Tables 3.4.6A and 3.4.6B, respectively.

3.4.4.1.4 Load Case 4: Non-Mechanistic Tipover

The non-mechanistic tipover event, as described in Subsection 2.2.3(b), is site-dependent only to the extent that the stiffness of the target (ISFSI pad) affects the severity of the impact impulse. To bound the majority of ISFSI pad sites, the tipover analyses are performed using a stiff target foundation, which is defined in Table 2.2.9. The objectives of the analyses are to demonstrate that the plastic deformation in the fuel basket is sufficiently limited to permit the stored SNF to be retrieved by normal means and that there is no significant loss of radiation shielding in the storage system. Furthermore, the maximum lateral deflection of the lateral surface of the fuel basket is within the limit assumed in the criticality analyses (Chapter 6), and therefore, the lateral deflection does not have an adverse effect on criticality safety.

The tipover event is an artificial construct wherein the HI-STORM FW overpack is assumed to be perched on its edge with its C.G. directly over the pivot point A (Figure 3.4.8). In this orientation, the overpack begins its downward rotation with zero initial velocity. Towards the end of the tip-over, the overpack is horizontal with its downward velocity ranging from zero at the pivot point (point A) to a maximum at the farthest point of impact. The angular velocity at the instant of impact defines the downward velocity distribution along the contact line.

In the following, an explicit expression for calculating the angular velocity of the cask at the instant when it impacts on the ISFSI pad is derived. Referring to Figure 3.4.8, let r be the length AC where C is the cask centroid. Therefore,

$$r = \left(\frac{d^2}{4} + h^2 \right)^{1/2}$$

The mass moment of inertia of the HI-STORM FW system, considered as a rigid body, can be written about an axis through point A, as

$$SF = \frac{a_{\min}}{a_{\det}} = \frac{0.287in}{0.0625in} = 4.595$$

The calculated minimum crack size is about 4.6 times the maximum possible pre-existing crack size in the fuel basket (based on 100% surface inspection of each panel). The large safety factor ensures that crack propagation in the HI-STORM FW fuel baskets will not occur due to the non-mechanistic tipover event.

3.4.4.1.5 Load Case 5: Design, Short-Term Normal and Off-Normal MPC Internal Pressure

The MPC Enclosure Vessel, which is designed to meet the stress intensity limits of ASME Subsection NB [3.4.4], is analyzed for a bounding (design, long-term and short-term) internal pressure (Table 2.2.1) of 120 psig using the ANSYS finite element code [3.4.1]. Except for the applied loads and the boundary conditions, the finite element model of the MPC Enclosure Vessel used for this load case is identical to the model described in Subsections 3.1.3.2 and 3.4.3.2 for the MPC lifting analysis.

The only load applied to the finite element model for this load case is the bounding MPC design internal pressure for normal conditions (Table 2.2.1). All internal surfaces of the MPC storage cavity are subjected to the design pressure. The center node on the top surface of the MPC upper lid is fixed against translation in all directions. Symmetric boundary conditions are applied to the two vertical symmetry planes. This set of boundary conditions allows the MPC Enclosure Vessel to deform freely under the applied pressure load. Figure 3.4.31 graphically depicts the applied pressure load and the boundary conditions for Load Case 5.

The stress intensity distribution in the MPC Enclosure Vessel under design internal pressure is shown in Figure 3.4.23. Figures 3.4.32 and 3.4.33 plot the thru-thickness variation of the stress intensity at the baseplate center and at the baseplate-to-shell juncture, respectively. The maximum primary stress intensities in the MPC Enclosure Vessel are compared with the applicable stress intensity limits from Subsection NB of the ASME Code (Fig. NB-3221-1). The allowable stress intensities are obtained at design temperature limits in Table 2.2.3 (600°F for the MPC shell and the MPC lid, 400°F for the baseplate, and 600°F at the baseplate-to-shell juncture, conservatively). The maximum calculated stress intensities in the MPC Enclosure Vessel, and their corresponding allowable limits, are summarized in Table 3.4.7 for Load Case 5.

Similar evaluations are performed for the MPC Enclosure Vessel under short-term normal (Level A) and off-normal (Level B) conditions. The applied loads are bounding internal pressure (120 psig) from Table 2.2.1 and conservatively bounding temperature contours based on thermal evaluations in Sections 4.5 and 4.6 for short-term normal and off-normal conditions, respectively. The maximum primary and secondary stress intensities in the MPC Enclosure Vessel are compared with the applicable stress intensity limits from Subsection NB of the ASME Code (Fig. NB-3222-1 and Subsection NB-3223 for Level A and Level B, respectively). The allowable stress intensities are obtained at bounding bulk temperatures [3.4.13] from thermal evaluations. The maximum

calculated stress intensities in the MPC Enclosure Vessel and their corresponding allowable limits, are summarized in Tables 3.4.7A and 3.4.7B for Level A and Level B, respectively.

3.4.4.1.6 Load Case 6: Maximum MPC Internal Pressure Under Accident Conditions

The maximum pressure in the MPC Enclosure Vessel under accident conditions is specified in Table 2.2.1. The stress analysis under this pressure condition uses the same model as the one described in the preceding subsection for design internal pressure. The only change is the magnitude of the applied pressure. Figure 3.4.34 graphically depicts the applied pressure load and the boundary conditions for Load Case 6.

The stress intensity distribution in the MPC Enclosure Vessel under accident internal pressure is shown in Figure 3.4.24. The maximum primary stress intensities in the MPC Enclosure Vessel are compared with the applicable stress intensity limits from Subsection NB of the ASME Code [3.4.4]. The allowable stress intensities are taken at 800°F for the MPC shell, the MPC lid, the MPC baseplate, and the MPC baseplate-to-shell juncture. These temperatures are obtained from Table 2.2.3 for accident conditions and bound the calculated temperatures under normal operating conditions for the respective MPC components based on the thermal evaluations in Chapter 4. The allowable stress intensities are determined based on normal operating temperatures since the MPC accident internal pressure is dictated by the 100% fuel rod rupture accident, which does not cause any significant rise in MPC temperatures. In fact, the temperatures inside the MPC tend to decrease as a result of the 100% fuel rod rupture accident due to the increase in the density and internal pressure of the circulating gas. The maximum calculated stress intensities in the MPC Enclosure Vessel, and their corresponding allowable limits, are summarized in Table 3.4.8 for Load Case 6.

3.4.4.1.7 Load Case 7: Accident External Pressure

The only affected component for this load case is the MPC Enclosure Vessel. The accident external pressure (Table 2.2.1) is selected sufficiently high to envelop hydraulic-pressure in the case of flood or explosion-induced pressure at all ISFSI Sites.

The main effect of an external pressure on the MPC is to cause compressive stress in the MPC shell. Therefore, the potential of buckling must be investigated. The methodology used for this investigation is from ASME Code Case N-284-2 (Metal Containment Shell Buckling Design Methods, Section III, Division 1, Class MC (1/07)). This Code Case has been previously used by Holtec in [3.1.4] and accepted by the NRC as a valid method for evaluation of stability in vessels.

The detailed evaluation of the MPC shell under accident external pressure is provided in Appendix 3.C. It is concluded that positive safety margins exist so that elastic or plastic instability of the maximum height MPC shell does not occur under the applied pressure.

3.4.4.1.8 Load Case 8: Non-Mechanistic Heat-Up of the HI-TRAC VW Water Jacket

Even though the analyses presented in Chapter 4 indicate that the temperature of water in the water jacket shall not reach boiling and the rupture disks will not open, it is (non-mechanistically)

assumed that the hydraulic pressure in the water jacket reaches the relief devices' set point. The objective of this analysis is to demonstrate that the stresses in the water jacket and its welds shall be below the limits set down in an appropriate reference ASME Boiler and Pressure Vessel Code (Section II Class 3) for the Level D service condition. The accident pressure inside the water jacket is given in Table 2.2.1.

The HI-TRAC VW water jacket is analyzed using classical strength-of-materials. Specifically, the unsupported span of the water jacket shell between radial ribs is treated as a curved beam, with clamped ends, under a uniformly distributed radial pressure. The force and moment reactions at the ends of the curved beam for this type of loading are calculated using the formula for Case 5j of Table 18 in [3.4.16]. The primary membrane plus bending stress is then calculated using the formula for Case 1 of Table 16 in [3.4.16]. Figure 3.4.35 depicts the curved beam model that is used to analyze the water jacket shell and defines the key input variables. The input values that are used in the calculations are provided in Table 3.4.12.

The bottom flange, which serves as the base of the water jacket, is conservatively analyzed as an annular plate clamped at the water jacket inside diameter and simply supported at the water jacket outside diameter. The maximum bending stress in the bottom flange is calculated using the following formula from [3.4.18, Art. 23]:

$$\sigma_{max} = k \frac{q \cdot a^2}{h^2}$$

where q is the internal pressure inside the water jacket (= 73.65 psi), a is the outside radius of the water jacket (= 47.5 in), and h is the thickness of the bottom flange (= 2.0 in). The analyzed pressure accounts for the accident internal pressure inside the water jacket (Table 2.2.1) plus the hydrostatic pressure at the base of the water jacket. The value of k is dependent on the diameter ratio of the annular plate and the boundary conditions. Per Table 5 of [3.4.18], k is equal to 0.122 for a bounding diameter ratio of 1.25 and simply supported-clamped boundary conditions (Case 4). Therefore, the maximum bending stress in the bottom flange is:

$$\sigma_{max} = 5{,}068 \text{ psi}$$

Per Table 3.1.6, the allowable primary membrane plus bending stress intensity for SA-516 Gr. 70 material (at 400ºF) is 58,500 psi, which means the factor of safety is greater than 10.

The maximum stresses in the various water jacket components, including the connecting welds, are summarized in Table 3.4.9.

For HI-TRAC VW Version V water jacket, the same approach used to evaluate HI-TRAC VW water jacket, described above, is used. The detailed calculation for HI-TRAC VW Version V water jacket is documented in [3.4.13]. Table 3.4.9A summarizes the stress analysis results for the various HI-TRAC VW Version V water jacket components, including the connecting welds.

For HI-TRAC VW Version V2 neutron shield cylinder, the same approach used to evaluate HI-TRAC VW water jacket, described above, is used because neutron shield cylinder serves the same function as that of water jacket and its configuration is similar to water jacket. The detailed calculation for HI-TRAC VW Version V2 neutron shield cylinder is documented in [3.4.13]. Table 3.4.9B summarizes the stress analysis results for the various HI-TRAC VW Version V2 neutron shield cylinder components, including the connecting welds.

3.4.4.1.9 Load Case 9: Handling of Components

The stress analyses of the MPC, the HI-STORM FW overpack, and the HI-TRAC VW transfer cask under normal handling conditions are presented in Subsection 3.4.3.

3.4.4.1.10 Load Case 10: Snow Load

In accordance with Table 3.1.1, the HI-STORM FW lid is analyzed using ANSYS to demonstrate that the design basis snow load (Table 2.2.8) does not cause stress levels in the overpack lid to exceed ASME Subsection NF stress limits for Level A. The finite element model is identical to the one used in Subsection 3.4.3 to simulate a vertical lift of the HI-STORM FW lid (see Figure 3.4.5). For conservatism, a pressure load of 10 psig is used in the finite element analysis. The stress distribution in the lid under the bounding snow load is shown in Figure 3.4.25. The maximum stress results are summarized in Table 3.4.10. For conservatism, the maximum calculated stress at any point on the lid, including secondary stress contributions, is compared against the primary membrane and primary bending stress limits per ASME Subsection NF.

3.4.4.1.11 Load Case 11: MPC Reflood Event

During a MPC reflood event, water is introduced to the MPC cavity through the lid drain line to cooldown the MPC internals and support fuel unloading. This quenching operation induces thermal stresses and strains in the fuel rod cladding, which are maximum at the boundary interface between the rising water and the dry (gaseous) cavity. The following analysis demonstrates that the maximum total strain in the fuel cladding due to the reflood event is well below the failure strain limit of the material. Thus, the fuel rod cladding will not be breached due to the MPC reflood event.

The analysis is carried out using the finite element code ANSYS [3.4.1]. The model, which is shown in Figure 3.4.37, is constructed using 4-node plastic large strain elements (SHELL43) based on the cladding dimensions of the PWR reference fuel type. The overall length of the model is equal to 30 times the outside diameter of the fuel cladding. As seen in Figure 3.4.37, the mesh size is reduced at the boundary between the wetted fuel rod and the dry fuel rod, where the highest stresses and strains occur. To account for the gas pressure inside the fuel rod, the top end of the fuel rod is fixed in the vertical direction, and an equivalent axial force is applied at the bottom end. A radial pressure is also applied to the inside surface of the fuel cladding (see Figure 3.4.38). The fuel cladding material is modeled as a bi-linear isotropic hardening material with temperature dependent properties. The key input data used to develop the finite element model are summarized in Table 3.4.14A.

Table 3.4.1 STRESS INTENSITY RESULTS FOR MPC ENCLOSURE VESSEL – NORMAL HANDLING			
Item	Calculated Value (ksi)	Allowable Limit (ksi)	Safety Factor
Lid – Primary Membrane Stress Intensity	9.47	16.5	1.74
Lid – Local Membrane Plus Primary Bending Stress Intensity	15.19	24.75	1.63
Baseplate – Primary Membrane Stress Intensity	11.00	18.05	1.64
Baseplate – Local Membrane Plus Primary Bending Stress Intensity	26.27	27.10	1.03
Shell – Primary Membrane Stress Intensity	15.92	17.50	1.10
Shell – Local Membrane Plus Primary Bending Stress Intensity	23.07	26.3	1.14

Table 3.4.2

STRESS RESULTS FOR HI-TRAC VW – NORMAL HANDLING

Item	Calculated Value (ksi)	Allowable Limit (ksi)	Safety Factor
Top Flange-to-Inner/Outer Shell Weld – Primary Shear Stress (all HI-TRAC VW Versions)	7.33	16.6	2.26
Inner/Outer Shell – Primary Membrane Stress (all HI-TRAC VW Versions)	1.71	18.4	10.75
Bottom Lid Bolts – Tensile Stress (standard HI-TRAC VW)	9.33	57.5	6.16
Bottom Lid – Primary Bending Stress (standard HI-TRAC VW)	3.81	29.4	7.71

Table 3.4.2A

STRESS RESULTS FOR HI-TRAC VW VERSION V BOTTOM LID AND BOTTOM LID BOLTS – NORMAL HANDLING

Item	Calculated Value (ksi)	Allowable Limit (ksi)	Safety Factor
Bottom Lid Bolts – Tensile Stress	8.60	24.12	2.80
Bottom Lid Bolts – Shear Stress in Bolt Threads	4.87	9.96	2.04
Bottom Lid – Primary Bending Stress	4.47	29.4	6.58
Bottom Lid – Thread Shear Stress	3.56	11.76	3.30

Table 3.4.2B

STRESS RESULTS FOR HI-TRAC VW VERSION V2 BOTTOM LID AND BOTTOM LID CONNECTION – NORMAL HANDLING

Item	Calculated Value (ksi)	Allowable Limit (ksi)	Safety Factor
Bottom Lid Connection – Tensile Stress	10.41	16.56	1.59
Bottom Lid Connection – Shear Stress	5.21	11.04	2.12
Bottom Lid – Primary Bending Stress	3.64	29.4	8.07

Table 3.4.5 CASK ROTATIONS DUE TO LARGE MISSILE IMPACT			
Event	Calculated Value (deg)	Allowable Limit (deg)	Safety Factor
Missile Impact plus Tornado Wind on HI-STORM FW	3.83	30.3	7.91
Missile Impact plus Pressure Drop on HI-STORM FW	4.37	30.3	6.93
Missile Impact plus Tornado Wind on HI-TRAC VW (standard version)	14.88	23.19	1.56
Missile Impact plus Pressure Drop on HI-TRAC VW (standard version)	12.66	23.19	1.83

Table 3.4.5A CASK ROTATIONS DUE TO LARGE MISSILE IMPACT – HI-TRAC VW VERSION V			
Event	Calculated Value (deg)	Allowable Limit (deg)	Safety Factor
Missile Impact plus Tornado Wind on HI-TRAC VW Version V	15.00	23.21	1.55
Missile Impact plus Pressure Drop on HI-TRAC VW Version V	12.74	23.21	1.82

Table 3.4.5B CASK ROTATIONS DUE TO LARGE MISSILE IMPACT – HI-TRAC VW VERSION V2			
Event	Calculated Value (deg)	Allowable Limit (deg)	Safety Factor
Missile Impact plus Tornado Wind on HI-TRAC VW Version V2	16.43	21.24	1.29
Missile Impact plus Pressure Drop on HI-TRAC VW VersionV2	13.55	21.24	1.57

Table 3.4.6 MISSILE PENETRATION RESULTS – SMALL AND INTERMEDIATE MISSILE			
Missile Type – Impact Location	Calculated Value (in)	Allowable Limit (in)	Safety Factor
Small Missile – All Impact Locations	< 0.4 in	> 0.5 in (MPC shell thickness)†	> 1.25
Intermediate Missile – Side Strike on HI-STORM FW Outer Shell (away from Inlet)	8.39	29.00	3.46
Intermediate Missile – Side Strike on HI-STORM FW Outer Shell (at Inlet)	11.69	24.00	2.05
Intermediate Missile – End Strike on HI-STORM FW Lid	10.46	19.25	1.84
Intermediate Missile – Side Strike on HI-TRAC VW Outer Shell (standard version)	0.50	1.50	3.00
Intermediate Missile – End Strike on MPC Closure Lid	0.23	9.00	39.13

† In reality, a maximum velocity impact between the small projectile missile and the MPC shell is not credible due to the geometry of the HI-STORM FW inlet and outlet vents (i.e., no direct line of sight).

Table 3.4.6A SMALL AND INTERMEDIATE MISSILE PENETRATION RESULTS – HI-TRAC VW VERSION V			
Missile Type – Impact Location	Calculated Value (in)	Allowable Limit (in)	Safety Factor
Small Missile – All Impact Locations	< 0.4 in	≥ 0.5 in (MPC shell thickness)†	> 1.25
Intermediate Missile – Side Strike on HI-TRAC VW Outer Shell	0.50	1.50	3.00

Table 3.4.6B SMALL AND INTERMEDIATE MISSILE PENETRATION RESULTS – HI-TRAC VW VERSION V2			
Missile Type – Impact Location	Calculated Value (in)	Allowable Limit (in)	Safety Factor
Small Missile – All Impact Locations	< 0.4 in	> 0.5 in (MPC shell thickness)†	> 1.25
Intermediate Missile – Side Strike on HI-TRAC VW Outer Shell	0.50	1.75	3.50

† In reality, a maximum velocity impact between the small projectile missile and the MPC shell is not credible due to the geometry of the HI-STORM FW inlet and outlet vents (i.e., no direct line of sight).

Table 3.4.7 STRESS INTENSITY RESULTS FOR MPC ENCLOSURE VESSEL – DESIGN INTERNAL PRESSURE			
Item	Calculated Value (ksi)	Allowable Limit (ksi)	Safety Factor
Lid – Primary Membrane Stress Intensity	6.42	16.50	2.57
Lid – Local Membrane Plus Primary Bending Stress Intensity	14.26	24.75	1.74
Baseplate – Primary Membrane Stress Intensity	9.00	18.60	2.07
Baseplate – Local Membrane Plus Primary Bending Stress Intensity	21.97	27.90	1.27
Shell – Primary Membrane Stress Intensity	13.76	16.50	1.20
Shell – Local Membrane Plus Primary Bending Stress Intensity	19.84	24.75	1.25

Table 3.4.7A

STRESS INTENSITY RESULTS FOR MPC ENCLOSURE VESSEL – SHORT-TERM NORMAL INTERNAL PRESSURE

Item	Calculated Value (ksi)	Allowable Limit (ksi)	Safety Factor
Lid – Primary Membrane Stress Intensity	13.10	18.05	1.38
Lid – Local Membrane Plus Primary Bending Stress Intensity	21.56	27.1	1.26
Baseplate – Primary Membrane Stress Intensity	12.40	18.95	1.53
Baseplate – Local Membrane Plus Primary Bending Stress Intensity	28.25	28.425	1.01
Shell – Primary Membrane Stress Intensity	14.07	18.05	1.28
Shell – Local Membrane Plus Primary Bending Stress Intensity	23.12	27.1	1.17
Shell – Local Membrane Plus Primary Bending Plus Secondary Stress Intensity	49.81	56.85	1.14

Table 3.4.7B

STRESS INTENSITY RESULTS FOR MPC ENCLOSURE VESSEL – OFF-NORMAL INTERNAL PRESSURE

Item	Calculated Value (ksi)	Allowable Limit (ksi)	Safety Factor
Lid – Primary Membrane Stress Intensity	12.10	18.15	1.50
Lid – Local Membrane Plus Primary Bending Stress Intensity	16.45	27.225	1.66
Baseplate – Primary Membrane Stress Intensity	9.69	19.25	1.99
Baseplate – Local Membrane Plus Primary Bending Stress Intensity	26.15	28.93	1.11
Shell – Primary Membrane Stress Intensity	15.93	19.25	1.21
Shell – Local Membrane Plus Primary Bending Stress Intensity	26.00	28.93	1.11
Shell – Local Membrane Plus Primary Bending Plus Secondary Stress Intensity	48.92	54.15	1.11

Table 3.4.8 STRESS INTENSITY RESULTS FOR MPC ENCLOSURE VESSEL – ACCIDENT INTERNAL PRESSURE			
Item	Calculated Value (ksi)	Allowable Limit (ksi)	Safety Factor
Lid – Primary Membrane Stress Intensity	10.69	35.5	3.32
Lid – Local Membrane Plus Primary Bending Stress Intensity	13.60	53.25	3.92
Baseplate – Primary Membrane Stress Intensity	16.00	35.50	2.20
Baseplate – Local Membrane Plus Primary Bending Stress Intensity	36.61	53.25	1.45
Shell – Primary Membrane Stress Intensity	22.93	35.50	1.55

Table 3.4.9 STRESS RESULTS FOR HI-TRAC VW (STANDARD VERSION) WATER JACKET – ACCIDENT INTERNAL PRESSURE			
Item	Calculated Value (ksi)	Allowable Limit (ksi)	Safety Factor
Bottom Flange – Primary Membrane Plus Bending Stress	5.10	55.8	10.95
Water Jacket Shell – Primary Membrane Plus Bending Stress	7.99	55.8	6.98
Water Jacket Rib – Primary Membrane Stress	4.73	37.2	7.86
Water Jacket Shell-to-Bottom Flange Weld – Primary Shear Stress	3.70	29.4	7.94

Table 3.4.9A STRESS RESULTS FOR HI-TRAC VW VERSION V WATER JACKET – ACCIDENT INTERNAL PRESSURE			
Item	Calculated Value (ksi)	Allowable Limit (ksi)	Safety Factor
Bottom Flange – Primary Membrane Plus Bending Stress	5.30	55.8	10.52
Water Jacket Shell – Primary Membrane Plus Bending Stress	8.18	55.8	6.83
Water Jacket Rib – Primary Membrane Stress	4.86	37.2	7.66
Water Jacket Shell-to-Bottom Flange Weld – Primary Shear Stress	3.54	22.32	6.30

Table 3.4.9B STRESS RESULTS FOR HI-TRAC VW VERSION V2 NEUTRON SHIELD CYLINDER – ACCIDENT INTERNAL PRESSURE			
Item	Calculated Value (ksi)	Allowable Limit (ksi)	Safety Factor
Bottom Lid – Primary Membrane Plus Bending Stress	4.08	55.8	13.66
Neutron Shield Cylinder Shell – Primary Membrane Plus Bending Stress	8.31	55.8	6.72
Neutron Shield Cylinder Rib – Primary Membrane Stress	3.71	37.2	10.03
Neutron Shield Cylinder Shell-to-Bottom Flange Weld – Primary Shear Stress	2.18	22.32	10.26

Table 3.4.10 STRESS RESULTS FOR HI-STORM FW LID – SNOW LOAD			
Item	Calculated Value (ksi)	Allowable Limit (ksi)	Safety Factor
Maximum Primary Membrane Stress	1.81	16.6	9.16
Maximum Primary Membrane Plus Bending Stress	1.81	24.9	13.7

Table 3.4.16 CASK SLIDING DISPLACEMENTS DUE TO LARGE MISSILE IMPACT (LOAD CASE 3)			
Cask	Calculated Sliding Displacement (ft)	Allowable Sliding Displacement (ft)	Safety Factor
HI-STORM FW	0.454	3.33 (cask to cask) 6.2 (cask to edge of ISFSI pad)	7.33 13.6
HI-TRAC VW	1.133	None Established	-
HI-TRAC VW Version V	1.193	None Established	-
HI-TRAC VW Version V2	0.958	None Established	-

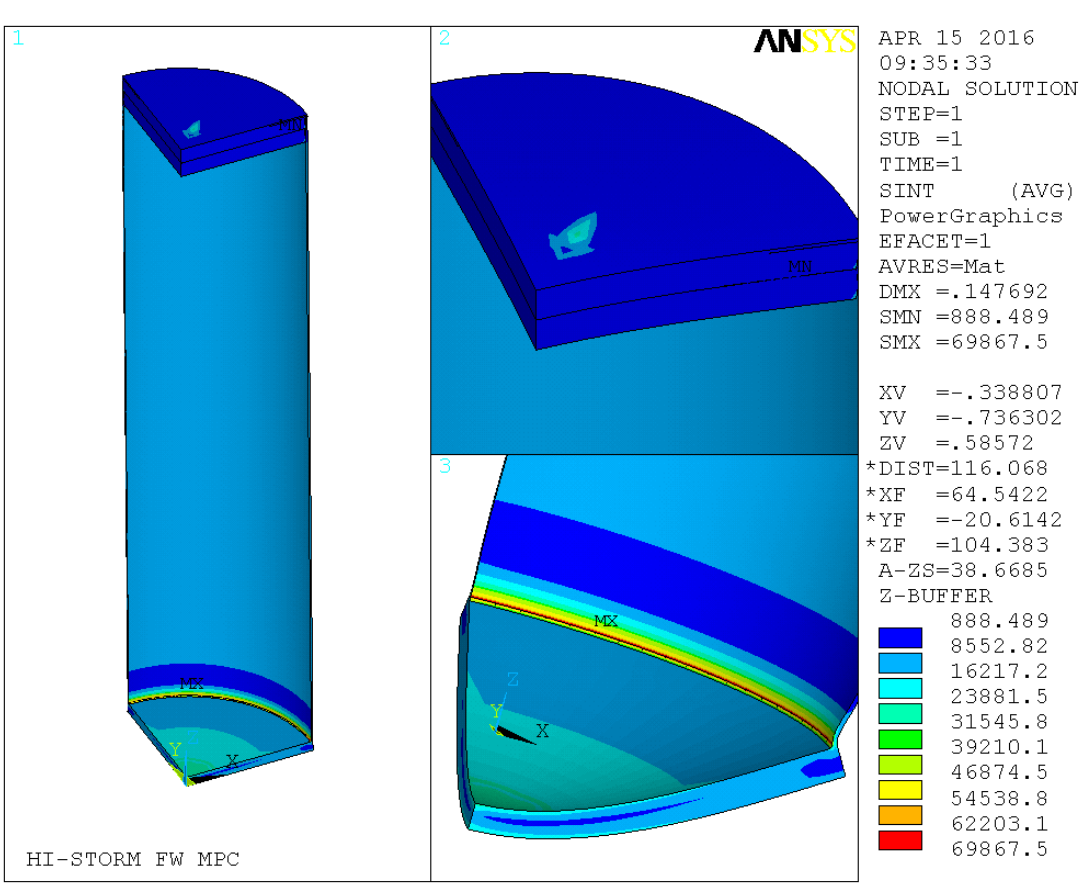

Figure 3.4.2: Stress Intensity Distribution in MPC Enclosure Vessel – Normal Handling

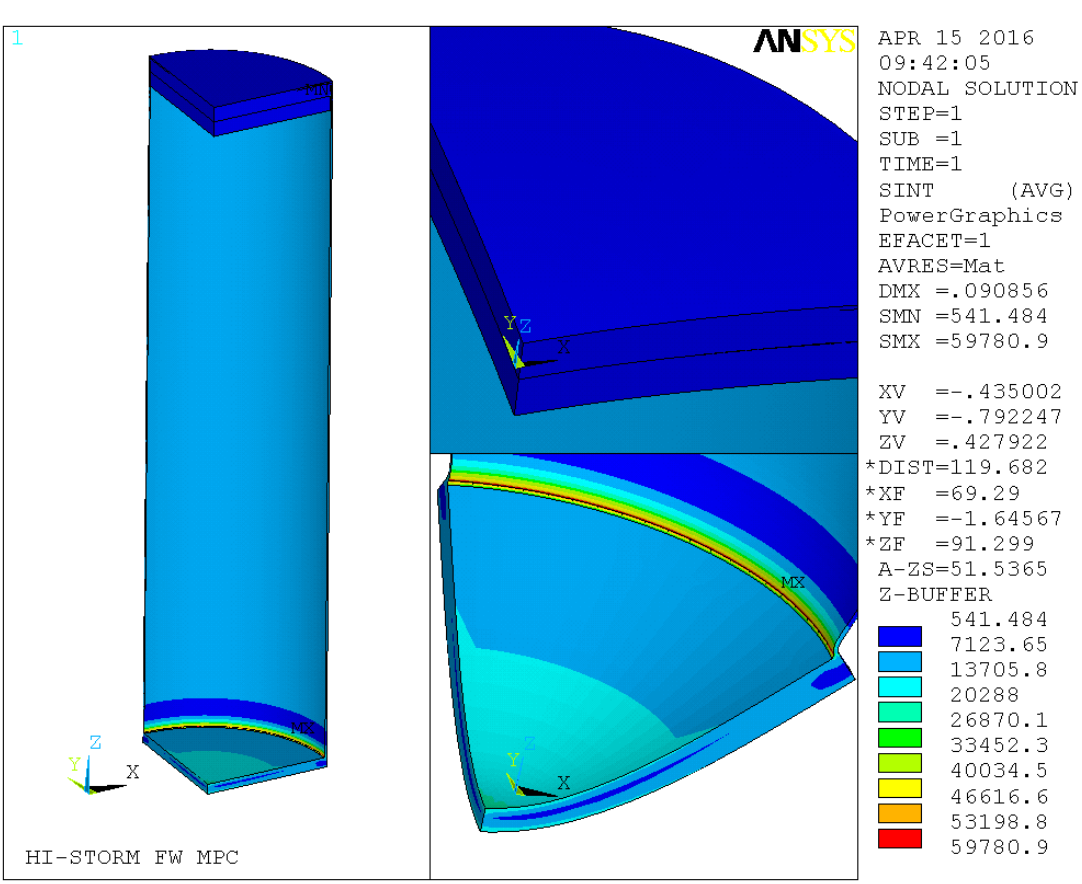

Figure 3.4.23: Stress Intensity Distribution in MPC Enclosure Vessel – Design Internal Pressure

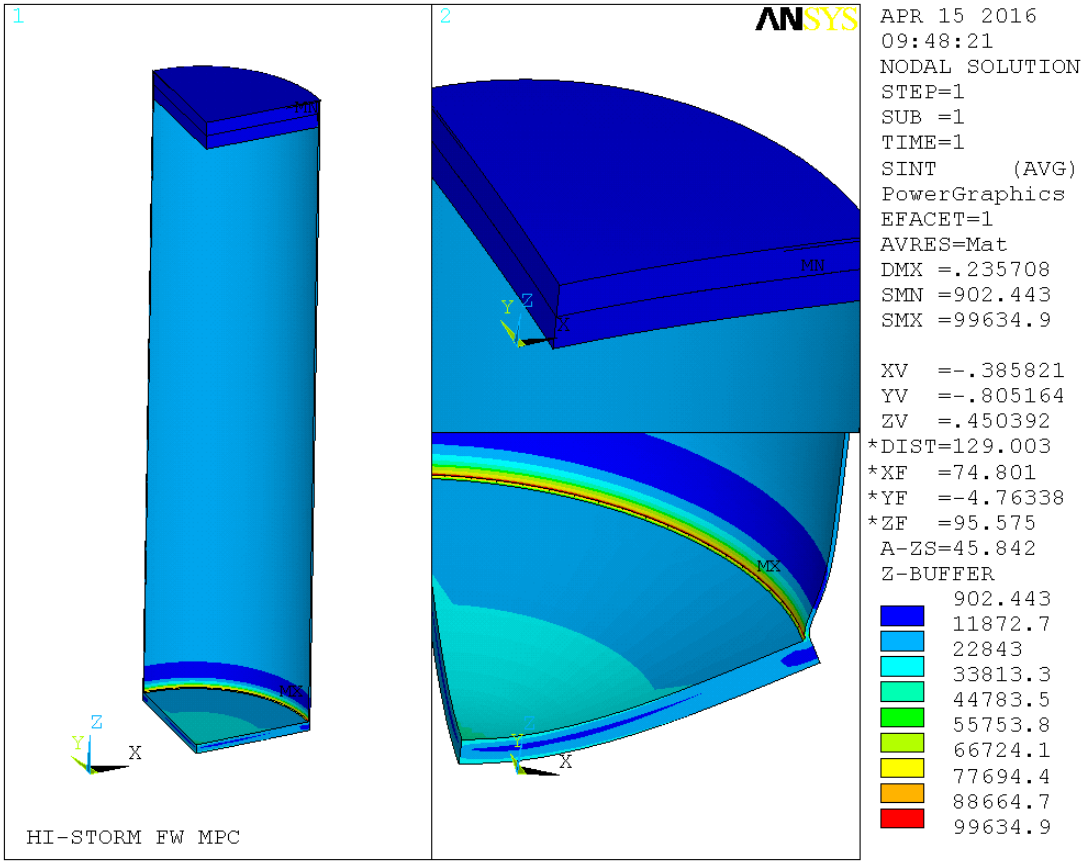

Figure 3.4.24: Stress Intensity Distribution in MPC Enclosure Vessel – Accident Internal Pressure

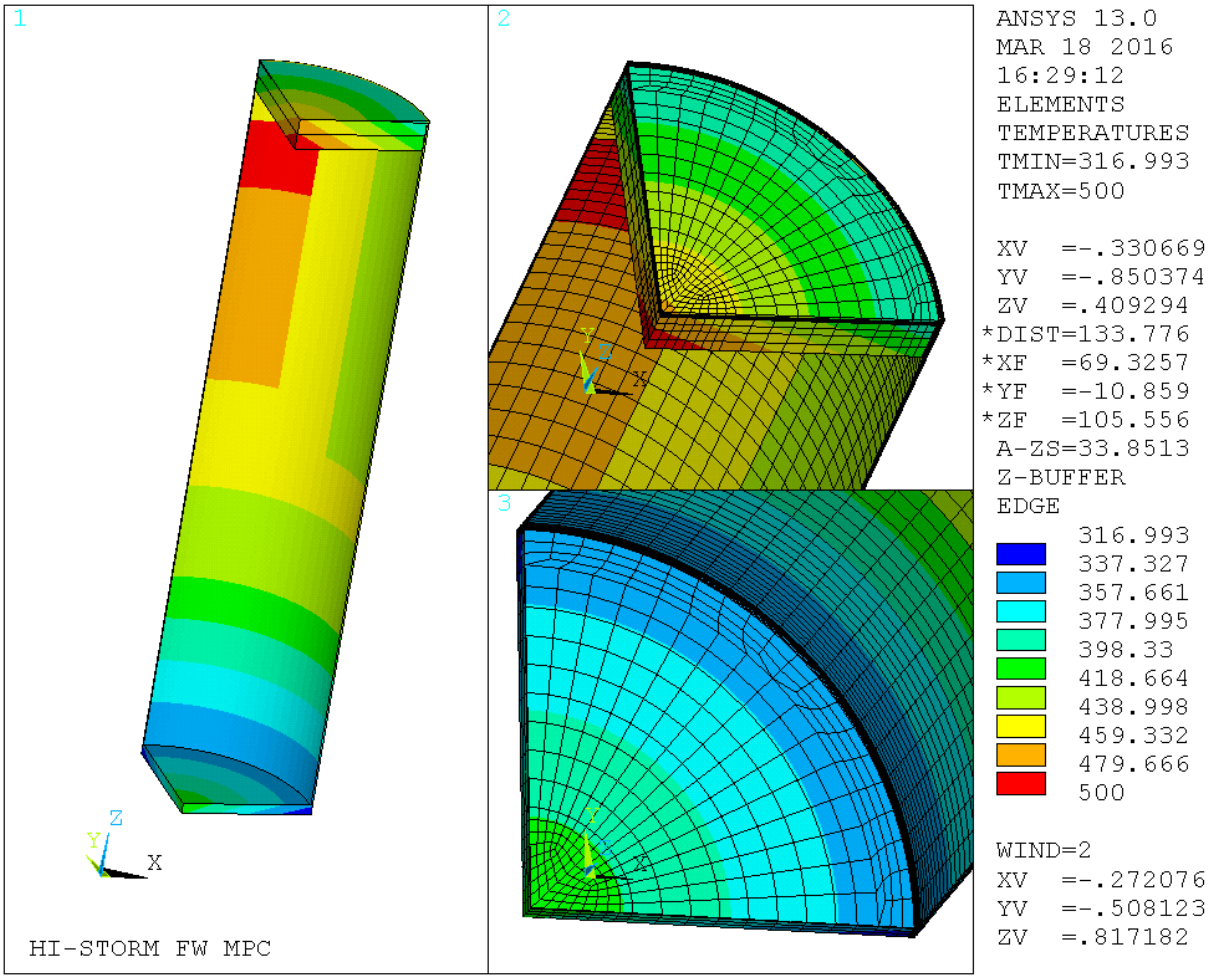

Figure 3.4.27: Short-Term Normal Condition Temperature Distribution in MPC Enclosure Vessel

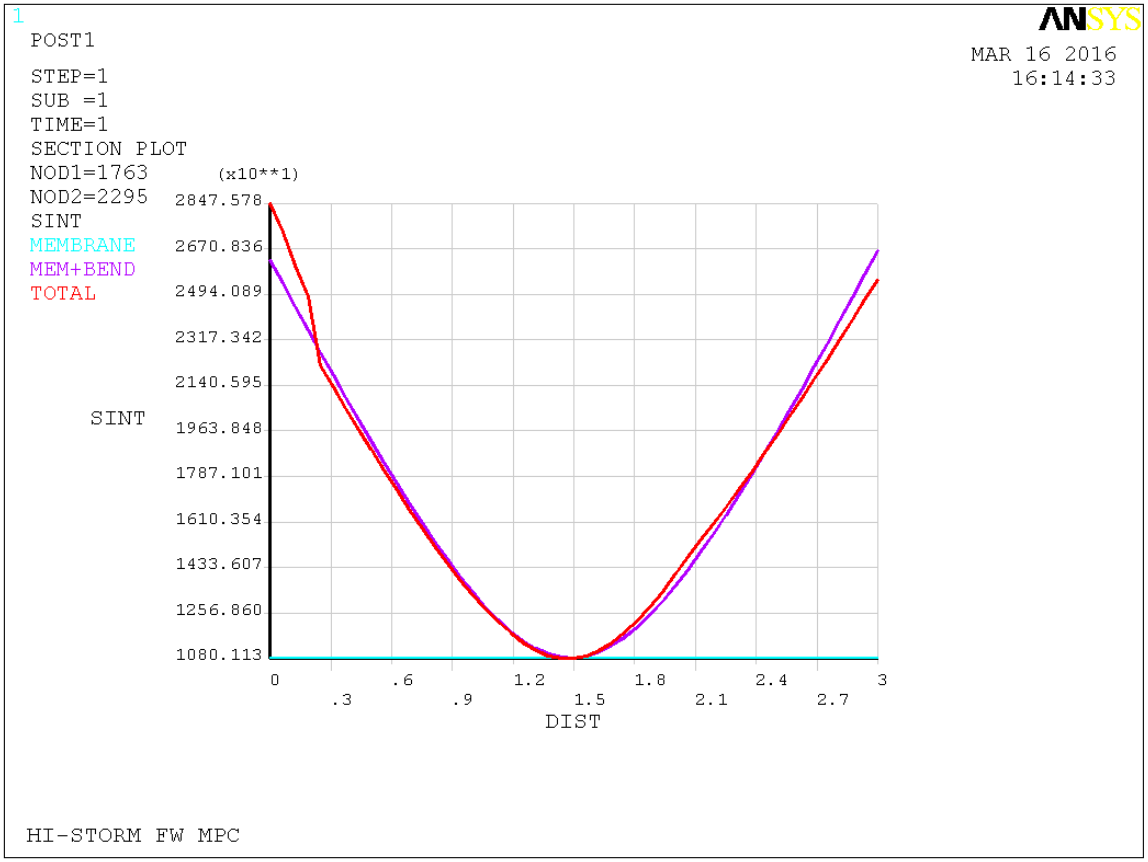

Figure 3.4.29: Normal Handling of MPC Enclosure Vessel –
Thru-Thickness Stress Intensity Plot at Baseplate Center

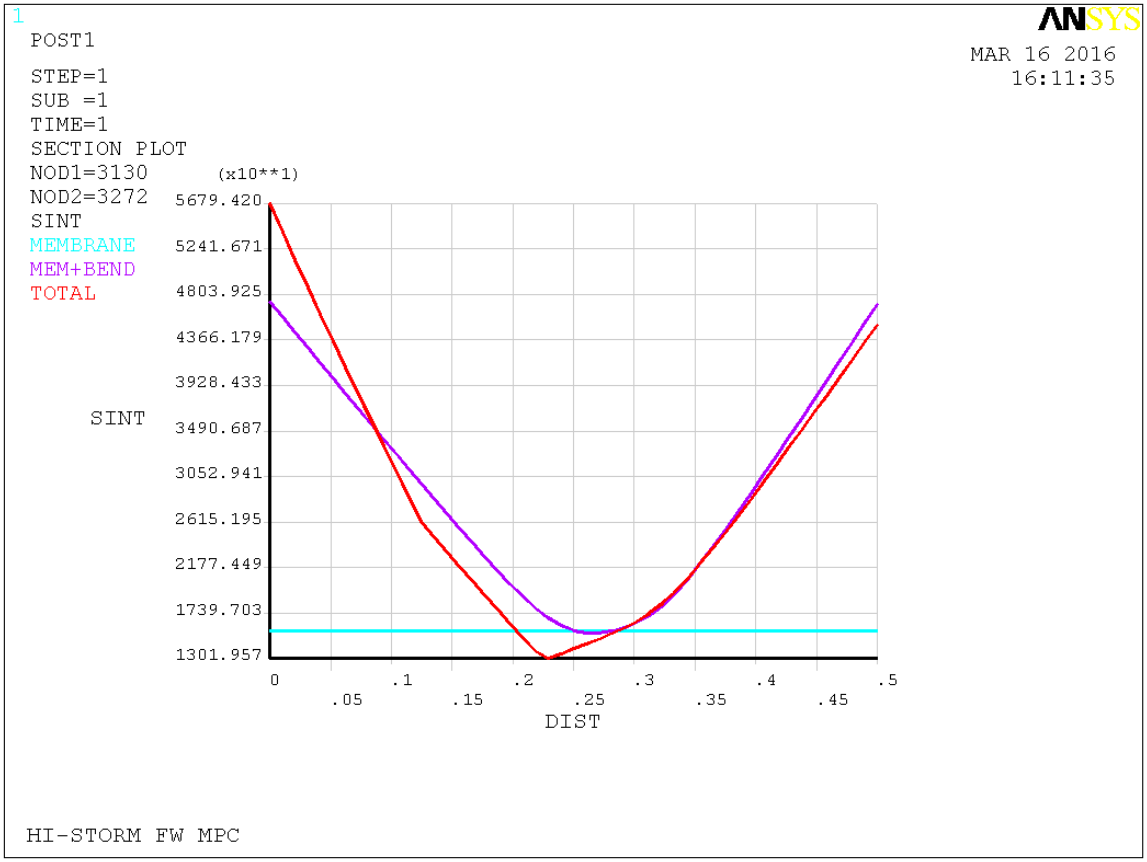

Figure 3.4.30: Normal Handling of MPC Enclosure Vessel –
Thru-Thickness Stress Intensity Plot at Baseplate-to-Shell Juncture

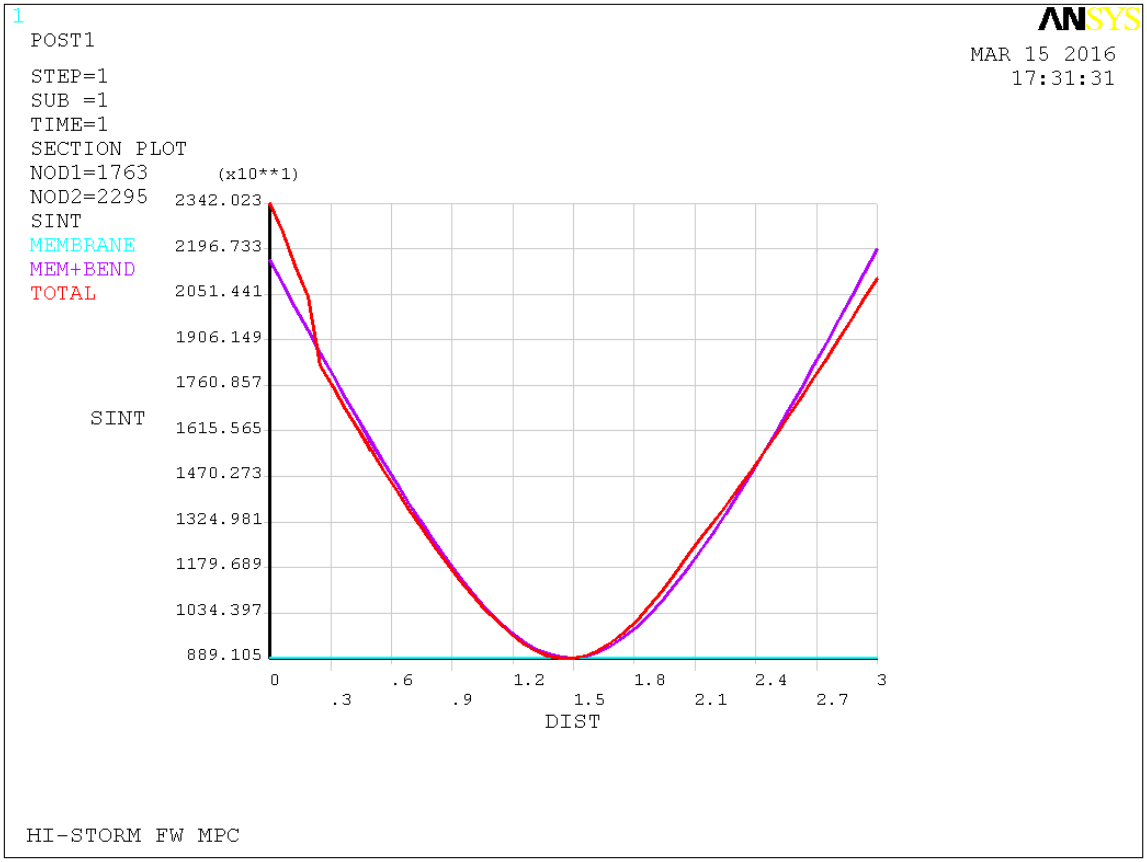

Figure 3.4.32: MPC Design Internal Pressure (Load Case 5) –
Thru-Thickness Stress Intensity Plot at Baseplate Center

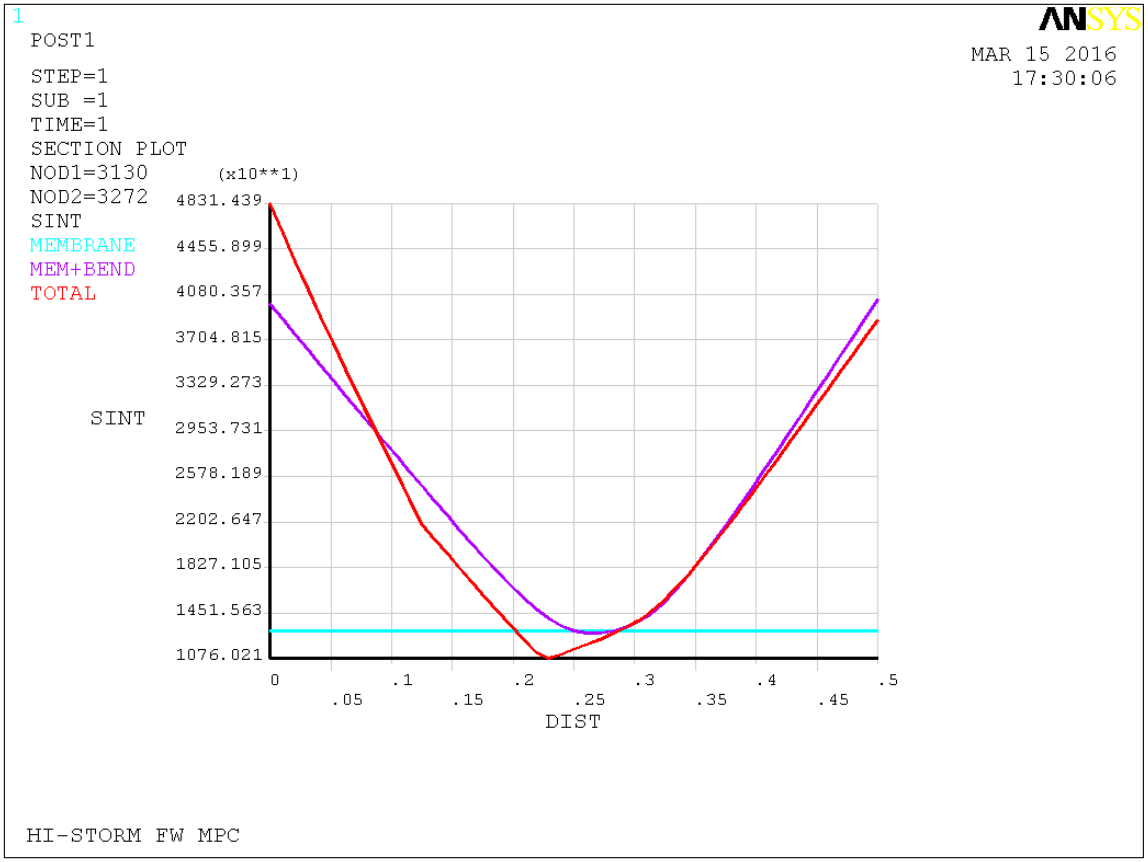

Figure 3.4.33: MPC Design Internal Pressure (Load Case 5) –
Thru-Thickness Stress Intensity Plot at Baseplate-to-Shell Juncture

3.8 REFERENCES

[3.1.1] NUREG-0612, "Control of Heavy Loads at Nuclear Power Plants", United States Nuclear Regulatory Commission, 1980.

[3.1.2] ANSI N14.6-1993, "American National Standard for Special Lifting Devices for Shipping Containers Weighing 10000 Pounds (4500 kg) or More for Nuclear Materials", American National Standards Institute, Inc.

[3.1.3] D. Burgreen, "Design Methods for Power Plant Structures", Arcturus Publishers, 1975.

[3.1.4] HI-STORM 100 FSAR, Holtec Report No. HI-2002444, Revision 7 [USNRC Docket 72-1014].

[3.1.5] NUREG/CR-1815, "Recommendations for Protecting Against Failure by Brittle Fracture in Ferritic Steel Shipping Containers Up to Four Inches Thick".

[3.1.6] Aerospace Structural Metals Handbook, Manson.

[3.1.7] SHAKE2000, A Computer Program for the 1-D Analysis of Geotechnical Earthquake Engineering Problems, G.A. Ordonez, Dec. 2000.

[3.1.8] LS-DYNA, Version 971, Livermore Software Technology, 2006.

[3.1.9] "Construction of True-Stress-True-Strain Curves for LS-DYNA Simulations," Holtec Proprietary Position Paper DS-307, Revision 2.*

[3.1.10] HI-STAR 180 SAR, Holtec Report No. HI-2073681, Revision 3 [USNRC Docket 71-9325].

[3.3.1] ASME Boiler & Pressure Vessel Code, Section II, Part D, 2007.

[3.3.2] HI-STAR 60 SAR, Holtec Report No. HI-2073710, Revision 2 [USNRC Docket 71-9336].

[3.3.3] Properties of Aluminum Alloys, Tensile, Creep, and Fatigue Data at High and Low Temperatures, ASM International, November 2006.

* Supporting document submitted with the HI-STORM FW License Application (Docket 72-1032).

[3.4.11] Holtec Proprietary Report HI-2094353, "Analysis of the Non-Mechanistic Tipover Event of the Loaded HI-STORM FW Storage Cask", Latest Revision.

[3.4.12] Oberg, E. et. al., Machinery's Handbook, Industrial Press Inc., 27th Edition.

[3.4.13] Holtec Proprietary Report HI-2094418, "Structural Calculation Package for HI-STORM FW System", Revision 28.

[3.4.14] EPRI NP-440, Full Scale Tornado Missile Impact Tests, 1977.

[3.4.15] Holtec Proprietary Report HI-2094392, "Tornado Missile Analysis for HI-STORM FW System", Revision 8.

[3.4.16] Young, W., Roark's Formulas for Stress & Strain, McGraw Hill Book Company, 6th Edition.

[3.4.17] Interim Staff Guidance - 15, "Materials Evaluation", Revision 0.

[3.4.18] Timoshenko, S., Strength of Materials (Part II), Third Edition, 1958.

[3.4.19] "Mechanical Testing and Evaluation", ASM Handbook, Volume 8, 2000.

[3.4.20] Adkins, H.E., Koeppel, B.J., Tang, D.T., "Spent Nuclear Fuel Structural Response When Subject to an End Drop Impact Accident," Proceedings ASME/JSME Pressure Vessels and Piping Conference, PVP-Vol. 483, American Society of Mechanical Engineers, New York, New York, 2004.

[3.4.21] Chun, R., Witte, M., Schwartz, M., "Dynamic Impact Effects on Spent Fuel Assemblies", Lawrence Livermore National Laboratory, Report UCID-21246, 1987.

[3.4.22] Rust, J.H., Nuclear Power Plant Engineering, Haralson Publishing Company, 1979.

[3.4.23] NUREG/CR-1864, "A Pilot Probabilistic Risk Assessment of a Dry Cask Storage System at a Nuclear Power Plant", USNRC, Washington D.C., 2007.

[3.4.24] EPRI TR-103949, "Temperature Limit Determination for the Inert Dry Storage of Spent Nuclear Fuel", May 1994.

[3.4.25] Holtec Proprietary Report HI-2166998, "Analysis of the Non-Mechanistic Tipover Event of the Loaded HI-STORM FW Storage Cask Loaded with MPC-32ML and MPC-31C", Latest Revision.

[3.4.26] ANSYS 13.0, ANSYS, Inc., 2010.

[3.4.27] ANSYS 14.0, ANSYS, Inc., 2011.

[3.4.28] ANSYS 15.0, SAS IP, Inc., 2013.

[3.6.1] Visual Nastran 2004, MSC Software, 2004.

CHAPTER 4* THERMAL EVALUATION

4.0 OVERVIEW

The HI-STORM FW system is designed for long-term storage of spent nuclear fuel (SNF) in a vertical orientation. The design envisages an array of HI-STORM FW systems laid out in a rectilinear pattern stored on a concrete ISFSI pad in an open environment. In this chapter, compliance of HI-STORM FW system's thermal performance to 10CFR72 requirements for outdoor storage at an ISFSI using 3-D thermal simulation models is established. The analyses consider passive rejection of decay heat from the stored SNF assemblies to the environment under normal, off-normal, and accident conditions of storage. Finally, the thermal margins of safety for long-term storage of both moderate burnup (up to 45,000 MWD/MTU) and high burnup spent nuclear fuel (greater than 45,000 MWD/MTU) in the HI-STORM FW system are quantified. Safe thermal performance during on-site loading, unloading and transfer operations, collectively referred to as "short-term operations" utilizing the HI-TRAC VW transfer cask is also evaluated.

The HI-STORM FW thermal evaluation follows the guidelines of NUREG-1536 [4.4.1] and ISG-11 [4.1.4]. These guidelines provide specific limits on the permissible maximum cladding temperature in the stored commercial spent fuel (CSF)† and other Confinement Boundary components, and on the maximum permissible pressure in the confinement space under certain operating scenarios. Specifically, the requirements are:

1. The fuel cladding temperature must meet the temperature limit under normal, off-normal and accident conditions appropriate to its burnup level and condition of storage or handling set forth in Table 4.3.1.
2. The maximum internal pressure of the MPC should remain within its design pressures for normal, off-normal, and accident conditions set forth in Table 2.2.1.
3. The temperatures of the cask materials shall remain below their allowable limits set forth in Table 2.2.3 under all scenarios.

As demonstrated in this chapter, the HI-STORM FW system is designed to comply with <u>all</u> of the criteria listed above. Sections 4.1 through 4.3 describe thermal analyses and input data that are common to all conditions of storage, handling and on-site transfer operations. All thermal analyses to evaluate normal conditions of storage in a HI-STORM FW storage module are described in Section 4.4. All thermal analyses to evaluate normal handling and on-site transfer in a HI-TRAC VW transfer cask are described in Section 4.5. All thermal analyses to evaluate off-normal and accident conditions are described in Section 4.6. This SAR chapter is in full

* This chapter has been prepared in the format and section organization set forth in Regulatory Guide 3.61. However, the material content of this chapter also fulfills the requirements of NUREG-1536. Pagination and numbering of sections, figures, and tables are consistent with the convention set down in Chapter 1, Section 1.0, herein. All terms-of-art used in this chapter are consistent with the terminology of the Glossary. Finally, all evaluations and results presented in this Chapter are supported by calculation packages cited herein (References [4.1.9], [4.1.1]0 and [4.1.12]).

† Defined as nuclear fuel that is used to produce energy in a commercial nuclear reactor (See Glossary).

compliance with ISG-11 and with NUREG-1536 guidelines, subject to the exceptions and clarifications discussed in Chapter 1, Table 1.0.3.

As explained in Section 1.2, the storage of SNF in the fuel baskets in the HI-STORM FW system is configured for a three-region storage system under regionalized storage and uniform storage. Figures 1.2.1a, 1.2.1b and 1.2.2 provide the information on the location of the regions and Tables 1.2.3a, 1.2.3b and 1.2.4a provide the permissible specific heat load (heat load per fuel assembly) in each region for the PWR and BWR MPCs, respectively. The Specific Heat Load (SHL) values under regionalized storage are defined for two patterns that in one case maximizes ALARA (Table 1.2.3a, Pattern A and Table 1.2.4a) and in the other case maximizes heat dissipation (Table 1.2.3a, Pattern B). The ALARA maximized fuel loading is guided by the following considerations:

- Region 1: Located in the core region of the basket is permitted to store fuel with medium specific heat load.
- Region 2: This is the intermediate region flanked by the core region (Region I) from the inside and the peripheral region (Region III) on the outside. This region has the maximum SHL in the basket.
- Region 3: Located in the peripheral region of the basket, this region has the smallest SHL. Because a low SHL means a low radiation dose emitted by the fuel, the low heat emitting fuel around the periphery of the basket serves to block the radiation from the Region II fuel, thus reducing the total quantity of radiation emanating from the MPC in the lateral direction.

Thus, the 3-region arrangement defined above serves to minimize radiation dose from the MPC and peak cladding temperatures mitigated by avoiding placement of hot fuel in the basket core.

To address the needs of cask users having high heat load fuel inventories, fuel loading Pattern B is defined in Table 1.2.3a to maximize heat dissipation by locating hotter fuel in the cold peripheral Region 3 and in this manner minimize cladding temperatures. This has the salutary effect of minimizing core temperature gradients in the radial direction and thermal stresses in the fuel and fuel basket.

As an alternative to the loading patterns discussed above, fuel storage in the MPC-37 and MPC-89 is permitted to use the heat load charts shown in Figures 1.2.3a, 1.2.4a, 1.2.5a (MPC-37) and Figures 1.2.6a, 1.2.7a (MPC-89) or Figures 1.2.3b, 1.2.3c, 1.2.4b, 1.2.4c, 1.2.5b, 1.2.5c (MPC-37) and Figures 1.2.6b, 1.2.7b (MPC-89) for damaged fuel and fuel debris in certain locations.

The salutary consequences of all regionalized loading arrangements become evident from the computed peak cladding temperatures in this chapter, which show margin to the ISG-11 limit discussed earlier.

The safety analyses summarized in this chapter demonstrate acceptable margins to the allowable limits under all design basis loading conditions and operational modes. Minor changes to the design parameters that inevitably occur during the product's life cycle which are treated within

stresses due to restraint on basket periphery thermal growth is eliminated by providing adequate basket-to-canister shell gaps to allow for basket thermal growth during all operational modes.

[Proprietary information withheld in Accordance with 10 CFR 2.390]

The MPCs uniform & regionalized fuel storage scenarios are defined in Figures 1.2.1a, 1.2.1b and 1.2.2 in Chapter 1 and design maximum decay heat loads for storage of zircaloy clad fuel are listed in Tables 1.2.3a, 1.2.3b, 1.2.3d, 1.2.4a and in Figures 1.2.3a thru 1.2.3c, 1.2.4a thru 1.2.4c, 1.2.5a thru 1.2.5c, 1.2.6a thru 1.2.6b, 1.2.7a thru 1.2.7b. The axial heat distribution in each fuel assembly is conservatively assumed to be non-uniformly distributed with peaking in the active fuel mid-height region (see axial burnup profiles in Figures 2.1.3 and 2.1.4). Table 4.1.1 summarizes the principal operating parameters of the HI-STORM FW system.

The fuel cladding temperature limits that the HI-STORM FW system is required to meet are discussed in Section 4.3 and given in Table 2.2.3. Additionally, when the MPCs are deployed for storing High Burnup Fuel (HBF) further restrictions during certain fuel loading operations (vacuum drying) are set forth herein to preclude fuel temperatures from exceeding the normal temperature limits. To ensure explicit compliance, a specific term “short-term operations” is defined in Chapter 2 to cover all fuel loading activities. ISG-11 fuel cladding temperature limits are applied for short-term operations.

The HI-STORM FW system (i.e., HI-STORM FW overpack, HI-TRAC VW transfer cask and MPC) is evaluated under normal storage (HI-STORM FW overpack), during off-normal and accident events and during short-term operations in a HI-TRAC VW. Results of HI-STORM FW thermal analysis during normal (long-term) storage are obtained and reported in Section 4.4. Results of HI-TRAC VW short-term operations (fuel loading, on-site transfer and vacuum drying) are reported in Section 4.5. Results of off-normal and accident events are reported in Section 4.6.

Table 4.1.1 HI-STORM FW OPERATING CONDITION PARAMETERS	
Condition	**Value**
MPC Decay Heat, max.	Tables 1.2.3a, 1.2.3b and 1.24a Figures 1.2.3a thru 1.2.3b, Figures 1.2.4a thru 1.2.4c, Figures 1.2.5a thru 1.2.5c, Figures 1.2.6a thru 1.2.6b and Figures 1.2.7a thru 1.2.7b.
MPC Operating Pressure	Note 1
Normal Ambient Temperature	Table 2.2.2
Helium Backfill Pressure	Table 4.4.8
Note 1: The MPC operating pressure used in the thermal analysis is based on the minimum helium backfill pressure specified in Table 4.4.8 and MPC cavity average temperature.	

4.2 SUMMARY OF THERMAL PROPERTIES OF MATERIALS

The thermo-physical properties listed in the tables in this section are identical to those used in the HI-STORM 100 FSAR [4.1.8], except for Metamic-HT and aluminum shims. Materials present in the MPCs include Alloy X[1], Metamic-HT, aluminum alloy 2219, and helium. Materials present in the HI-STORM FW storage overpack include carbon steels and concrete. Materials present in the HI-TRAC VW transfer cask include carbon steel, lead, Holtite-A, air, and demineralized water. In Table 4.2.1, a summary of references used to obtain cask material properties for performing all thermal analyses is presented.

Individual thermal conductivities of the alloys that comprise the Alloy X materials and the bounding Alloy X thermal conductivity are reported in Appendix 1.A of this report. Tables 4.2.2 and 4.2.3 provide numerical thermal conductivity data of materials at several representative temperatures.

Surface emissivity data for key materials of construction are provided in Table 4.2.4. The emissivity properties of painted external surfaces are generally excellent. Kern [4.2.5] reports an emissivity range of 0.8 to 0.98 for a wide variety of paints. In the HI-STORM FW thermal analysis, an emissivity of 0.85[2] is applied to painted surfaces. The solar absorbtivity, α_s of paints are generally low. The NASA technical publication [4.2.20] reports α_s in the range of 0.03 to 0.54. For a robustly bounding analysis α_s equal to 0.85 is applied to all exposed overpack surfaces.

In Table 4.2.5, the heat capacity and density of the MPC, overpack and CSF materials are presented. These properties are used in performing transient (i.e., hypothetical fire accident condition) analyses. The temperature-dependent values of the viscosities of helium and air are provided in Table 4.2.6.

The heat transfer coefficient for exposed surfaces is calculated by accounting for both natural convection and thermal radiation heat transfer. The natural convection coefficient depends upon the product of Grashof (Gr) and Prandtl (Pr) numbers. Following the approach developed by Jakob and Hawkins [4.2.9], the product Gr×Pr is expressed as $L^3\Delta TZ$, where L is height of the overpack, ΔT is overpack surface temperature differential and Z is a parameter based on air properties, which are known functions of temperature, evaluated at the average film temperature. The temperature dependent values of Z are provided in Table 4.2.7.

1 Alloy X is defined in Appendix 1.A to designate a group of stainless steel alloys permitted for use in the HI-STORM FW system. In this chapter the terms Alloy X and stainless steel are used interchangeably.
2 This is conservative with respect to prior cask industry practice, which has historically utilized higher emissivities [4.2.16].

Table 4.2.1

SUMMARY OF HI-STORM FW SYSTEM MATERIALS
THERMAL PROPERTY REFERENCES

Material	Emissivity	Conductivity	Density	Heat Capacity
Helium	N/A	Handbook [4.2.2]	Ideal Gas Law	Handbook [4.2.2]
Air	N/A	Handbook [4.2.2]	Ideal Gas Law	Handbook [4.2.2]
Zircaloy	[4.2.3], [4.2.17], [4.2.18], [4.2.7]	NUREG [4.2.17]	Rust [4.2.4]	Rust [4.2.4]
UO_2	Note 1	NUREG [4.2.17]	Rust [4.2.4]	Rust [4.2.4]
Stainless Steel (machined forgings)[Note 2]	Kern [4.2.5]	ASME [4.2.8]	Marks' [4.2.1]	Marks' [4.2.1]
Stainless Steel Plates[Note 3]	ORNL [4.2.11], [4.2.12]	ASME [4.2.8]	Marks' [4.2.1]	Marks' [4.2.1]
Carbon Steel	Kern [4.2.5]	ASME [4.2.8]	Marks' [4.2.1]	Marks' [4.2.1]
Concrete	Note 1	Marks' [4.2.1]	Appendix 1.D of HI-STORM 100 FSAR [4.1.8]	Handbook [4.2.2]
Lead	Note 1	Handbook [4.2.2]	Handbook [4.2.2]	Handbook [4.2.2]
Water	Note 1	ASME [4.2.10]	ASME [4.2.10]	ASME [4.2.10]
Metamic-HT	Test Data Table 1.2.8	Test Data Table 1.2.8	Test Data Table 1.2.8	Test Data Table 1.2.8
Aluminum Alloy 2219	Note 4	ASM [4.2.19]	ASM [4.2.19]	ASM [4.2.19]
Holtite-A	Not Used	Sourcebook [4.2.22]		

Note 1: Emissivity not reported as radiation heat dissipation from these surfaces is conservatively neglected.

Note 2: Used in the MPC lid.

Note 3: Used in the MPC shell and baseplate.

Note 4: [**Withheld in Accordance with 10 CFR 2.390]**

Table 4.2.2

SUMMARY OF HI-STORM FW SYSTEM MATERIALS
THERMAL CONDUCTIVITY DATA

Material	**At 200°F (Btu/ft-hr-°F)**	**At 450°F (Btu/ft-hr-°F)**	**At 700°F (Btu/ft-hr-°F)**	**At 1000°F (Btu/ft-hr-°F)**
Helium	0.0976	0.1289	0.1575	0.1890
Air*	0.0173	0.0225	0.0272	0.0336
Alloy X****	8.4	9.8	11.0	12.4
Carbon Steel	24.4	23.9	22.4	20.0
Concrete**	1.05	1.05	1.05	1.05
Lead	19.4	17.9	16.9	N/A
Water	0.392	0.368	N/A	N/A
Metamic-HT	Table 1.2.8			
Aluminum Alloy 2219 **	69.3	69.3	69.3	69.3
Aluminum Alloy (Solid Shim Plate)***	86.7	86.7	86.7	86.7
Holtite-A	0.46			

* At lower temperatures, Air conductivity is between 0.0139 Btu/ft-hr-°F at 32°F and 0.0176 Btu/ft-hr-°F at 212°F.

** Conservatively assumed to be constant for the entire range of temperatures.

*** The optional solid shim aluminum plates discussed in Table 1.2.9 must have the tabulated minimum thermal conductivity.

**** Individual thermal conductivities of the alloys that comprise the Alloy X materials are reported in Appendix 1.A. Lowerbound Alloy X thermal conductivity is tabulated herein.

Table 4.2.4

SUMMARY OF MATERIALS SURFACE EMISSIVITY DATA*

Material	**Emissivity**
Zircaloy	0.80
Painted surfaces	0.85
Stainless steel (machined forgings)	0.36
Stainless Steel Plates	0.587**
Carbon Steel	0.66
Metamic-HT***	Table 1.2.8
Extruded Shims (Aluminum Alloy 2219)	Table 1.2.9 (oxidized) 0.1 (passivated)
Solid Shims (Aluminum Alloy)‡	Table 1.2.9

* See Table 4.2.1 for cited references.

** Lower bound value from the cited references in Table 4.2.1.

*** [Proprietary information withheld per 10 CFR 2.390]

‡ Solid aluminum shim surfaces are oxidized to yield emissivities tabulated in Table 1.2.9.

Table 4.2.5

DENSITY AND HEAT CAPACITY PROPERTIES SUMMARY*

Material	**Density (lbm/ft^3)**	**Heat Capacity (Btu/lbm-°F)**
Helium	(Ideal Gas Law)	1.24
Air	(Ideal Gas Law)	0.24
Zircaloy	409	0.0728
Fuel (UO_2)	684	0.056
Carbon steel	489	0.1
Stainless steel	501	0.12
Concrete	140**	0.156
Lead	710	0.031
Water	62.4	0.999
Metamic-HT	Table 1.2.8	Table 1.2.8
Aluminum Alloy 2219	177.3	0.207
Holtite-A	Table 1.2.5	0.46

* See Table 4.2.1 for cited references.

** Conservatively understated value.

Table 4.3.1 TEMPERATURE LIMITS OF CRITICAL COMPONENTS, ºF		
Fuel Cladding (Note 1)		
Condition	MBF	HBF
Normal storage	Table 2.2.3	Table 2.2.3
Short-term operations	Table 2.2.3	Table 2.2.3
Off-normal and Accident conditions	Table 2.2.3	Table 2.2.3
Metamic-HT (Note 2)		
Normal storage	Table 2.2.3	
Short term operations, Off-Normal and Accident conditions	Table 2.2.3	
Aluminum Shims (Note 3)		
Normal storage	Table 2.2.3	
Short term operations, Off-normal and Accident conditions	Table 2.2.3	
HI-TRAC VW Jacket		
Short term operations and off-normal conditions	Table 2.2.3 (Note 4)	
Accident condition	NA (Note 5)	
HI-TRAC VW Version V2 Holtite-A		
Short term operations and off-normal conditions	Table 2.2.3	
Accident condition	NA (Note 6)	

Notes:

1. Temperature limits per ISG-11, Rev. 3 [4.1.4].
2. The B_4C component in Metamic-HT is a refractory material that is unaffected by high temperature (on the order of 1000ºF) and the aluminum component is solid at temperatures in excess of 1000ºF.
3. To preclude melting the temperature limits are set well below the melting temperature of Aluminum Alloys.
4. Temperature limit is defined by the saturation temperature of water at water jacket design pressure specified in Table 2.2.1.
5. The jacket water is assumed to be lost under accident conditions.
6. Neutron shield temperature limits are applicable under short-term operation. During fire accident, it is assumed lost.

4.4 THERMAL EVALUATION FOR NORMAL CONDITIONS OF STORAGE

The HI-STORM FW Storage System (i.e., HI-STORM FW overpack and MPC) and HI-TRAC VW transfer cask thermal evaluation is performed in accordance with the guidelines of NUREG-1536 [4.4.1] and ISG-11 [4.1.4]. To ensure a high level of confidence in the thermal evaluation, 3-dimensional models of the MPC, HI-STORM FW overpack and HI-TRAC VW transfer cask are constructed to evaluate fuel integrity under normal (long-term storage), off-normal and accident conditions and in the HI-TRAC VW transfer cask under short-term operation and hypothetical accidents. The principal features of the thermal models are described in this section for HI-STORM FW and Section 4.5 for HI-TRAC VW. Thermal analyses results for the long-term storage scenarios are obtained and reported in this section. The evaluation addresses the design basis thermal loadings defined in Section 1.2.3. Based on these evaluations the limiting thermal loading condition is defined in Subsection 4.4.4 and adopted for evaluation of on-site transfer in the HI-TRAC (Section 4.5) and off-normal and accident events defined in Section 4.6.

4.4.1 Overview of the Thermal Model

As illustrated in the drawings in Section 1.5, the basket is a matrix of interconnected square compartments designed to hold the fuel assemblies in a vertical position under long term storage conditions. The basket is a honeycomb structure of Metamic-HT plates that are slotted and arrayed in an orthogonal configuration to form an integral basket structure.

[Proprietary information withheld in Accordance with 10 CFR 2.390]

Thermal analysis of the HI-STORM FW System is performed for all heat load scenarios defined in Chapter 1 for regionalized storage (Figures 1.2.1a and 1.2.2) and uniform storage (Figures 1.2.1b). Each fuel assembly is *assumed to be generating heat at the maximum permissible rate (Tables 1.2.3a, 1.2.3b, 1.2.4a, Figures 1.2.3a thru 1.2.3c, 1.2.4a thru 1.2.4c, 1.2.5a thru 1.2.5c, 1.2.6a thru 1.2.6b, 1.2.7a thru 1.2.7b)*. While the assumption of limiting heat generation in each storage cell imputes a certain symmetry to the cask thermal problem, it grossly overstates the total heat duty of the system in most cases because it is unlikely that any basket would be loaded with fuel emitting heat at their limiting values in *each* storage cell. Thus, the thermal model for the HI-STORM FW system is inherently conservative for real life applications. Other noteworthy features of the thermal analyses are:

i. While the rate of heat conduction through metals is a relatively weak function of temperature, radiation heat exchange increases rapidly as the fourth power of absolute temperature.

ii. Heat generation in the MPC is axially non-uniform due to non-uniform axial burnup profiles in the fuel assemblies.

f) The air flow in the HI-STORM FW/MPC annulus is simulated by the k-ω turbulence model with the transitional option enabled. The adequacy of this turbulence model is confirmed in the Holtec benchmarking report [4.1.6]. The annulus grid size is selected to ensure a converged solution.(See Section 4.4.1.6).

g) A limited number of fuel assemblies defined in Table 1.2.1 classified as damaged fuel are permitted to be stored in the MPC inside Damaged Fuel Containers (DFCs) or Damaged Fuel Isolators (DFIs). A DFC or DFI can be stored in the outer peripheral locations of MPC-37, MPC-32ML, and MPC-89 as shown in Figures 2.1.1a, 2.1.1b and 2.1.2, respectively. Additionally, a DFC or DFI can be stored in outer peripheral locations or in certain interior locations as shown in Figures 1.2.3a thru 1.2.3c, 1.2.4a thru 1.2.4c, 1.2.5a thru 1.2.5c, 1.2.6a thru 1.2.6b and 1.2.7a thru 1.2.7b. DFC or DFI emplaced fuel assemblies have a higher resistance to helium flow because of the debris screens. DFC/DFI fuel storage under peripherally permitted scenarios does not affect temperature of hot fuel stored in the core of the basket because DFC DFI storage is located away from hot fuel. For these scenarios the thermal modeling of the fuel basket under the assumption of all storage spaces populated with intact fuel is justified. Interior permitted DFC/DFI storage scenarios are addressed under item "m" below.

h) As shown in HI-STORM FW drawings in Section 1.5 the HI-STORM FW overpack is equipped with an optional heat shield to protect the inner shell and concrete from radiation heating by the emplaced MPC. The inner and outer shells and concrete are explicitly modeled. All the licensing basis thermal analyses explicitly include the heat shields. A sensitivity study is performed as described in paragraph 4.4.1.9 to evaluate the absence of heat shield on the overpack inner shell and overpack lid.

i) To maximize lateral resistance to heat dissipation in the fuel basket, 0.8 mm full length inter- panel gaps are conservatively assumed to exist at all intersections. This approach is identical to that used in the thermal analysis of the HI-STAR 180 Package in Docket 71-9325. The shims installed in the MPC peripheral spaces (See MPC-37, MPC-32ML and MPC-89 drawings in Section 1.5) are explicitly modeled. For conservatism bounding as-built gaps are assumed to exist and incorporated in the thermal models.

j) The thermal models incorporate all modes of heat transfer (conduction, convection and radiation) in a conservative manner.

k) The Discrete Ordinates (DO) model, previously utilized in the HI-STAR 180 docket (Docket 71-9325), is deployed to compute radiation heat transfer.

l) Laminar flow conditions are applied in the MPC internal spaces to obtain a lowerbound rate of heat dissipation.

m) A limited number of fuel assemblies classified as damaged or fuel debris placed in Damaged Fuel Containers (DFCs) or damaged fuel in Damaged Fuel Isolators (DFIs) are permitted to be stored in certain interior locations of MPC-37 and MPC-89 under heat load charts defined in Figures 1.2.3b thru 1.2.3c, 1.2.4b thru 1.2.4c, 1.2.5b thru 1.2.5c, 1.2.6b and 1.2.7b. These scenarios are evaluated herein.

The 3-D model described above is illustrated in the cross-section for the MPC-89, MPC-32ML and MPC-37 in Figures 4.4.2a, 4.4.2b and 4.4.3, respectively. A closeup of the fuel cell spaces which explicitly include the channel-to-cell gap in the 3-D model applicable to BWR fueled basket (MPC-89) is shown in Figure 4.4.4. The principal 3-D modeling conservatisms are listed below:

1) The storage cell spaces are loaded with high flow resistance design basis fuel assemblies (See Table 2.1.4).
2) Each storage cell is generating heat at its limiting value under the regionalized storage scenarios defined in Chapter 2, Section 2.1.
3) Axial dissipation of heat by conduction in the fuel pellets is neglected.
4) Dissipation of heat from the fuel rods by radiation in the axial direction is neglected.
5) The fuel assembly channel length for BWR fuel is overstated.
6) The most severe environmental factors for long-term normal storage – ambient temperature of 80°F and 10CFR71 insolation levels – were coincidentally imposed on the system.
7) Reasonably bounding solar absorbtivity of HI-STORM FW overpack external surfaces is applied to the thermal models.
8) To understate MPC internal convection heat transfer, the helium pressure is understated.
9) No credit is taken for contact between fuel assemblies and the MPC basket wall or between the MPC basket and the basket supports.
10) Heat dissipation by fuel basket peripheral supports is neglected.
11) Conservatively specified fuel basket emissivity in Table 1.2.8 adopted in the thermal analysis.
12) Lowerbound stainless steel emissivity obtained from cited references (See Table 4.2.1) are applied to MPC shell.
13) The k-ω model used for simulating the HI-STORM FW annulus flow yields uniformly conservative results [4.1.6].
14) Fuel assembly length is conservatively modeled equal to the height of the fuel basket.

The effect of crud resistance on fuel cladding surfaces has been evaluated and found to be negligible [4.1.8]. The evaluation assumes a thick crud layer (130 μm) with a bounding low conductivity (conductivity of helium). The crud resistance increases the clad temperature by a very small amount (~0.1°F) [4.1.8]. Accordingly this effect is neglected in the thermal evaluations.

iv. Principal Attributes of MPC-32ML 3D Thermal Model

The 3-D thermal model implemented to analyze MPC-32ML in HI-STORM FW system follows the same methodology as MPC-37 discussed previously in this sub-section. A summary of the modeling attributes is provided below:

a) The fuel storage spaces are modeled as porous media having effective thermal-hydraulic properties.

b) The entire cross-section of the storage cell is modeled as porous medium. The flow resistance through the storage cell is discussed in Paragraph 4.4.1.10.

c) The effective conductivities of the MPC-32ML storage spaces are computed for bounding fuel storage configuration defined in Paragraph 4.4.1.1(ii). The in-plane thermal conductivities are obtained using FLUENT [4.4.2] computer models of an array of fuel rods enclosed by a square box and reported in Table 4.4.1. For heat transfer in the axial direction an area weighted mean of cladding and helium conductivities are computed (see Table 4.4.1). In the interest of conservatism, thermal analysis of normal storage condition in HI-STORM FW is performed with a 10% reduced effective thermal conductivity of fuel region.

d) Similar to MPC-37, the internals of the MPC, including the basket cross-section, aluminum shims, bottom flow holes, top plenum, and circumferentially irregular downcomer formed by the annulus gap in the aluminum shims are modeled explicitly. For simplicity, the flow holes are modeled as rectangular openings with an understated flow area.

e) The thermal model and methodology outside the MPC is same as that adopted for MPC-37.

f) A limited number of fuel assemblies defined in Table 1.2.1 classified as damaged fuel are permitted to be stored in the MPC inside Damaged Fuel Containers (DFCs) and Damaged Fuel Isolators (DFIs). DFC/DFI storage is restricted to outer peripheral locations of MPC-32ML as shown in Figure 2.1.1b.

g) To maximize lateral resistance to heat dissipation in the fuel basket, 0.8 mm inter-panel gaps are conservatively assumed to exist at all intersections. This approach is identical to that used in the thermal analysis of MPC-37 basket. The shims installed in the MPC peripheral spaces (See MPC-32ML drawings in Section 1.5) are explicitly modeled. For conservatism bounding as-built gaps are assumed to exist and incorporated in the thermal models.

h) The thermal models incorporate all modes of heat transfer (conduction, convection and radiation) in a conservative manner.

4.4.1.4 Evaluation of Flow Resistance in Enlarged Cell MPCs

The flow resistance factors used in the porous media model are bounding for all fuel types and MPC baskets. This was accomplished for the PWR fueled MPC-37 by placing the most resistive Westinghouse 17x17 fuel assembly in the smaller cell opening MPC-32 approved under the HI-STORM 100 Docket 72-1014, CoC Amendment No. 5 and computing the flow resistance factors. In the case of BWR fueled MPC-89 the most resistive GE-10x10 fuel assembly in the channeled configuration is explicitly modeled in the MPC-89 fuel storage spaces as shown in Figure 4.4.4. The channeled space occupied by the GE-10x10 fuel assembly is modeled as a porous region with effective flow resistance properties computed by deploying an independent 3D FLUENT model of the array of fuel rods and grid spacers.

In the PWR fuel resistance modeling case physical reasoning suggests that the flow resistance of a fuel assembly placed in the larger MPC-37 storage cell will be less than that computed using the (smaller) counterpart cells cavities in the MPC-32. However to provide numerical substantiation FLUENT calculations are performed for the case of W-17x17 fuel placed inside the MPC-32 cell opening of 8.79” and the enlarged MPC-37 cell opening of 8.94”. The FLUENT results for the cell pressure drops under the baseline (MPC-32) and enlarged cell opening (MPC-37) scenarios are shown plotted in Figure 4-4-7. The plot shows that, as expected, the larger cell cross section case (MPC-37) yields a smaller pressure loss. Therefore, the MPC-37 flow resistance is bounded by the MPC-32 flow resistance used in the FLUENT simulations in the SAR. This evaluation is significant because the MPC-37 basket is determined as the limiting MPC and therefore the licensing basis HI-STORM FW temperatures by use of higher-than-actual resistance are overstated.

However, as mentioned in Sub-section 4.4.1.2, a flow resistance of $1x10^6$ m^{-2} through PWR fuel assemblies is used in the thermal analysis.

4.4.1.5 Screening Calculations to Ascertain Limiting Storage Scenario

To define the thermally most limiting HI-STORM FW storage scenario the following cases are evaluated under the limiting heat load patterns defined in Section 1.2.3[1]:

(i) MPC-89 under regionalized fuel storage Table 1.2.4a
(ii) Minimum height MPC-37 under regionalized fuel storage Table 1.2.3a
(iii) Reference height MPC-37 under regionalized fuel storage Table 1.2.3a
(iv) Maximum height MPC-37 under regionalized fuel storage Table 1.2.3a
(v) MPC-32ML under uniform fuel storage Table 1.2.3b
(vi) MPC-89 under heat load Figures 1.2.6a, 1.2.6b
(vii) MPC-37 under heat load Figures 1.2.3a/b/c, 1.2.4a/b/c and 1.2.5a/b/c
(viii) MPC-89 under heat load Figures 1.2.7a, 1.2.7b

1 Pattern A defined in Table 1.2.3a is the limiting fuel storage (See Subsection 4.4.4.1).

The following observations can be derived by inspecting the temperature field obtained from the thermal models:

- The fuel cladding temperatures are below the regulatory limit (ISG-11 [4.1.4]) under all uniform and regionalized storage scenarios defined in Chapter 1 (Figures 1.2.1a, 1.2.1b, and 1.2.2) and thermal loading scenarios defined in Tables 1.2.3a, 1.2.3b, 1.2. 4a, Figures 1.2.3a/b/c, 1.2.4a/b/c, 1.2.5a/b/c, 1.2.6a/b, and 1.2.7a/b.

- The limiting fuel temperatures are reached under the Pattern A thermal loading condition defined in Table 1.2.3a in the MPC-37. Accordingly, this scenario is adopted for thermal evaluation under on-site transfer (Section 4.5) and under off-normal and accident conditions (Section 4.6).

- The maximum temperature of the basket structural material is within its design limit.

- The maximum temperatures of the MPC pressure boundary materials are below their design limits.

- The maximum temperatures of concrete are within the guidance of the governing ACI Code (see Table 2.2.3).

- The calculated fuel temperature for the 15x15I short fuel assembly (Table 4.4.12) is bounded by the thermal evaluations for the minimum MPC-37 for short fuel (Table 4.4.3). The temperatures of other cask components are similar. It is reasonable to conclude that the temperatures and pressure for the minimum height MPC-37 (short fuel) bounds all scenarios.

The above observations lead us to conclude that the temperature field in the HI-STORM FW System with a loaded MPC containing heat emitting SNF complies with all regulatory temperature limits (Table 2.2.3). In other words, the thermal environment in the HI-STORM FW System is in compliance with Chapter 2 Design Criteria.

Also, all the licensing basis thermal evaluations documented in this chapter are performed for the most limiting thermal scenarios i.e. minimum MPC-37 with heat load pattern A.

4.4.4.2 Minimum Temperatures

In Table 2.2.2 of this report, the minimum ambient temperature condition for the HI-STORM FW storage overpack and MPC is specified to be -40°F. If, conservatively, a zero decay heat load with no solar input is applied to the stored fuel assemblies, then every component of the system at steady state would be at a temperature of -40°F. Low service temperature (-40°F) evaluation of the HI-STORM FW is provided in Chapter 3. All HI-STORM FW storage

cladding temperature, basket and MPC component temperatures decrease due to removal of heat shields. As expected, the results demonstrate an increase in overpack component temperatures. However, the overpack component temperatures are below their respective normal temperature limits with significant margins. Therefore, removal of heat shields does not have a detrimental effect on the system' thermal performance.

The temperatures of overpack components increase due to removal of heat shields under normal conditions of storage. This temperature increase is then added to the predicted temperatures of all the off-normal and accident conditions discussed in Section 4.6. The resulting temperatures are still well below their respective temperature limits which demonstrate that safety conclusions made for all the off-normal and accident condition evaluations in Section 4.6 remain valid even after the removal of heat shields from the HI-STORM overpack.

4.4.5 Maximum Internal Pressure

4.4.5.1 MPC Helium Backfill Pressure

The quantity of helium emplaced in the MPC cavity shall be sufficient to yield design operating pressures defined in Table 4.4.15. Thermal analyses performed on the different MPC designs indicate that this operating pressure requires a certain minimum helium backfill pressure (P_b) specified at a reference temperature (70ºF). The minimum backfill pressure for each MPC type is provided in Table 4.4.7. A theoretical upper limit on the helium backfill pressure also exists and is defined by the design pressure of the MPC vessel (Table 2.2.1). The upper limit of P_b is also reported in Table 4.4.7. To bound the minimum and maximum backfill pressures listed in Table 4.4.7 with a margin, a helium backfill specification is set forth in Table 4.4.8.

To provide additional helium backfill range for less than design basis heat load canisters a Sub-Design-Basis (SDB) heat load scenario is defined below:

(i) MPC-37 under 80% Pattern A Heat Load (Table 1.2.3)
(ii) MPC-37 under 90% Pattern A Heat Load (Table 1.2.3)
(iii) MPC-89 under 80% Design Heat Load (Table 1.2.4a)
(iv) MPC-37 under vacuum drying threshold heat load in Table 4.5.1[1].
(v) MPC-89 under vacuum drying threshold heat load in Table 4.5.1[1].

The storage cell and MPC heat load limits under the SDB scenario (i), (ii) & (iii) are specified in Table 4.4.11. Calculations for bounding scenarios (i), (ii) & (iii) show that the maximum cladding temperature under the SDB scenario meet the ISG-11 temperature limits. The helium backfill pressure limits supporting this scenario are defined in Table 4.4.10. These backfill limits maybe optionally adopted by a cask user if the decay heats of the loaded fuel assemblies meet the SDB decay heat limits stipulated above.

[1] Threshold scenarios (iv) and (v) are bounded by scenarios (i) and (iii) respectively because the core Region 1 assembly heat loads and total cask heat loads are bounded by the Sub-Design Basis heat loads in Table 4.4.11.

Table 4.4.4 presents a summary of the MPC free volumes determined for the lowerbound height MPC-89, lowerbound height MPC-37 and MPC-32ML fuel storage scenarios. The MPC maximum gas pressure is computed for a postulated release of fission product gases from fuel rods into this free space. For these scenarios, the amounts of each of the release gas constituents in the MPC cavity are summed and the resulting total pressures determined from the ideal gas law. A concomitant effect of rod ruptures is the increased pressure and molecular weight of the cavity gases with enhanced rate of heat dissipation by internal helium convection and lower cavity temperatures. As these effects are substantial under large rod ruptures the 100% rod rupture accident is evaluated with due credit for increased heat dissipation under increased pressure and molecular weight of the cavity gases. Based on fission gases release fractions (NUREG 1536 criteria [4.4.1]), rods' net free volume and initial fill gas pressure, maximum gas pressures with 1% (normal), 10% (off-normal) and 100% (accident condition) rod rupture are given in Table 4.4.5. The results of the calculations support the following conclusions:

(i) The maximum computed gas pressures reported in Table 4.4.5 under all design basis thermal loadings defined in Section 4.4 are all below the MPC internal design pressures for normal, off-normal and accident conditions specified in Table 2.2.1.

(ii) The MPC gas pressure obtained under loading Pattern A is essentially same as in Pattern B. Accordingly Pattern A loading condition for pressure boundary evaluation of MPC in the HI-TRAC and under off-normal and accident conditions is retained.

Evaluation of Non-Fuel Hardware

The inclusion of PWR non-fuel hardware (BPRA control elements and thimble plugs) to the PWR basket influences the MPC internal pressure through two distinct effects. The presence of non-fuel hardware increases the effective basket conductivity, thus enhancing heat dissipation and lowering fuel temperatures as well as the temperature of the gas filling the space between fuel rods. The gas volume displaced by the mass of non-fuel hardware lowers the cavity free volume. These two effects, namely, temperature lowering and free volume reduction, have opposing influence on the MPC cavity pressure. The first effect lowers gas pressure while the second effect raises it. In the HI-STORM FW thermal analysis, the computed temperature field (with non-fuel hardware excluded) has been determined to provide a conservatively bounding temperature field for the PWR baskets. The MPC cavity free space is computed based on conservatively computed volume displacement by fuel with non-fuel hardware included. This approach ensures conservative bounding pressures.

During in-core irradiation of BPRAs, neutron capture by the B-10 isotope in the neutron absorbing material produces helium. Two different forms of the neutron absorbing material are used in BPRAs: Borosilicate glass and B_4C in a refractory solid matrix ($A\iota_2O_3$). Borosilicate glass (primarily a constituent of Westinghouse BPRAs) is used in the shape of hollow pyrex glass tubes sealed within steel rods and supported on the inside by a thin-walled steel liner. To accommodate helium diffusion from the glass rod into the rod internal space, a relatively high void volume (~40%) is engineered in this type of rod design. The rod internal pressure is thus designed to remain below reactor operation conditions (2,300 psia and approximately 600°F

Table 4.4.1

EFFECTIVE FUEL PROPERTIES UNDER BOUNDING FUEL STORAGE CONFIGURATIONS[Note 1]

	Conductivity (Btu/hr-ft-ºF)			
	PWR: Short Fuel		**PWR: Standard Fuel**	
Temperature (ºF)	Planar	Axial	Planar	Axial
200	0.265	0.802	0.26	0.755
450	0.441	0.891	0.419	0.84
700	0.7	1.002	0.649	0.945
	08.33@800 ºF	1.16@1000 ºF	0.767@800 ºF	1.094@1000 ºF
	PWR: XL Fuel		**BWR Fuel**	
	Planar	Axial	Planar	Axial
200	0.269	0.794	0.321	1.077
450	0.426	0.882	0.491	1.189
700	0.647	0.993	0.727	1.332
	0.795@800 ºF	1.148@1000 ºF	0.847@800 ºF	1.539@1000 ºF

PWR: 15x15I Short Fuel		
Temperature (ºF)	Planar	Axial
200	0.249	0.76
450	0.407	0.845
700	0.631	0.952
	0.742@800 ºF	1.101@1000 ºF

Thermal Inertia Properties		
	Density (lb/ft^3)	Heat Capacity (Btu/lb-ºF)[Note 2]
PWR: 15x15I Short Fuel	196.4	0.056
PWR: Short Fuel	165.1	0.056
PWR: Standard Fuel	175.4	0.056
PWR: XL Fuel	186.6	0.056
BWR Fuel	255.5	0.056

Note 1: Bounding fuel storage configurations defined in 4.4.1.1(ii).
Note 2: The lowerbound heat capacity of principal fuel assembly construction materials tabulated in Table 4.2.5 (UO_2 heat capacity) is conservatively adopted.
Note 3: The fuel properties tabulated herein are used in screening calculations to define the limiting scenario for fuel storage (See Table 4.4.2).

Table 4.4.2

RESULTS OF SCREENING CALCULATIONS UNDER NORMAL STORAGE CONDITIONS

Storage Scenario	Peak Cladding Temperature, °C (°F)
MPC-37 (Note 2) - regionalized storage Table 1.2.3a Minimum Height[1] Reference Height Maximum Height	 **353 (667)** 342 (648) 316 (601)
MPC-37 (Note 4) - heat load Figure 1.2.3a - heat load Figure 1.2.4a - heat load Figure 1.2.5a - heat load Figure 1.2.3b[Notes 5,6,7]	 371 (700) 368 (694) 367 (693) 364 (687)
MPC-32ML (Note 3)	349 (660)
MPC-89 (Note 2) - regionalized storage Table 1.2.4a MPC-89 (Note 4) - heat load Figure 1.2.6a - heat load Figure 1.2.6b[Note 5, 7] - heat load Figure 1.2.7a - heat load Figure 1.2.7b[Note 5, 7]	 333 (631) 366 (691) 360 (680) 365 (689) 358 (676)

Notes:

(1) The highest temperature highlighted above is reached under the case of minimum height MPC-37 designed to store the short height Ft. Calhoun 14x14 fuel. This scenario is adopted in Chapter 4 for the licensing basis evaluation of fuel storage in the HI-STORM FW system. See Note 4.

(2) All the screening calculations for MPC-37 and MPC-89 were performed using a reference coarse mesh [4.1.9] and flow resistance based on the calculations in Holtec report [4.4.2].

(3) Screening calculations for MPC-32ML performed using a mesh with similar density as the licensing basis converged mesh adopted for MPC-37 in Section 4.4.1.6.

(4) Screening evaluation used the same mesh as licensing basis mesh adopted in Section 4.4.1.6. The computed temperatures are bounded by the licensing basis minimum height temperatures tabulated in Table 4.4.3.

(5) PCT of intact fuel assemblies in the loading patterns with fuel debris in the DFCs is bounded by that with damaged fuel in the DFCs as justified next. It is conservatively assumed that the damaged fuel assemblies inside DFCs/DFIs have the same axial heat distribution as the intact fuel assemblies to maximize the PCT of intact fuel assemblies. Fuel debris consistent with it's physical condition is modeled as packed towards bottom of the DFCs. This yields less impact on the PCT of intact fuel assemblies.

(6) The computed temperature under short length Damaged Fuel Storage is bounded by undamaged fuel temperatures computed above in heat load Figure 1.2.3a. This reasonably supports the conclusion that Damaged Fuel Storage under standard and long fuel storage in Figures 1.2.4b/c, 1.2.5b/c is bounded by undamaged fuel heat load scenarios evaluated in Figure 1.2.4a and 1.2.5a above.

(7) Peak temperatures including damaged fuel in DFC/DFI tabulated herein.

1 Bounding scenario adopted in this Chapter for all thermal evaluations.

Table 4.4.4 MINIMUM MPC FREE VOLUMES		
Item	**Lowerbound Height MPC-37 (ft^3)**	**MPC-89 (ft^3)**
Net Free Volume*	211.89	203.58
	MPC-32ML (ft^3)	
Net Free Volume*	278.7	
**Net free volumes are obtained by subtracting basket, fuel, aluminum shims, spacers, basket supports and DFCs metal volume from the MPC cavity volume.*		

Table 4.4.5 SUMMARY OF MPC INTERNAL PRESSURES UNDER LONG-TERM STORAGE*		
Condition	**MPC-37 *** (psig) Pattern A/Pattern B**	**MPC-89*** (psig)**
Initial maximum backfill** (at 70°F)	45.5/46.0	47.5
Normal: intact rods 1% rods rupture	 96.6/97.9 97.7/99.0	 98.4 99.0
Off-Normal (10% rods rupture)	107.5/108.9	104.0
Accident (100% rods rupture)	191.5/194.4	156.9
* Per NUREG-1536, pressure analyses with ruptured fuel rods (including BPRA rods for PWR fuel) is performed with release of 100% of the ruptured fuel rod fill gas and 30% of the significant radioactive gaseous fission products. ** Conservatively assumed at the Tech. Spec. maximum value (see Table 4.4.8). *** Tabulated pressures bound storage under heat load Figures 1.2.3a/b/c, 1.2.4a/b/c, 1.2.5a/b/c, 1.2.6a/b, 1.2.7a/b. (continued next page)		

Table 4.4.5 (continued)

SUMMARY OF MPC INTERNAL PRESSURES UNDER LONG-TERM STORAGE*

Condition	**MPC-32ML (psig)**
Initial backfill** (at 70°F)	45.5
Normal: intact rods 1% rods rupture	 91.1 91.8
Off-Normal (10% rods rupture)	98.3
Accident (100% rods rupture)	163.7

* Per NUREG-1536, pressure analyses with ruptured fuel rods (including BPRA rods for PWR fuel) is performed with release of 100% of the ruptured fuel rod fill gas and 30% of the significant radioactive gaseous fission products.

** Conservatively assumed at the Tech. Spec. maximum value (see Table 4.4.8).

Table 4.4.7
THEORETICAL LIMITS* OF MPC HELIUM BACKFILL PRESSURE**

MPC	Minimum Backfill Pressure (psig)	Maximum Backfill Pressure (psig)
MPC-37 Pattern A	41.0	47.3
MPC-37 Pattern B	40.8	47.1
MPC-37 Figures 1.2.3a Figures 1.2.4a Figure 1.2.5a	 43.9 43.6 44.1	 50.6 50.3 50.8
MPC-89 Table 1.2.4a Figure 1.2.6a Figure 1.2.7a	 41.9 41.7 41.8	 48.4 48.2 48.3
MPC-32ML	39.7	50.6

* The helium backfill pressures are set forth in the Technical Specifications with a margin (see Table 4.4.8).
** The pressures tabulated herein are at 70°F reference gas temperature.

Table 4.4.8 MPC HELIUM BACKFILL PRESSURE SPECIFICATIONS		
MPC	**Item**	**Specification**
MPC-37 Pattern A	Minimum Pressure	42.0 psig @ 70°F Reference Temperature
	Maximum Pressure	45.5 psig @ 70°F Reference Temperature
MPC-37 Pattern B	Minimum Pressure	41.0 psig @ 70°F Reference Temperature
	Maximum Pressure	46.0 psig @ 70°F Reference Temperature
MPC-89 Table 1.2.4a	Minimum Pressure	42.5 psig @ 70°F Reference Temperature
	Maximum Pressure	47.5 psig @ 70°F Reference Temperature
MPC-32ML	Minimum Pressure	41.5 psig @ 70°F Reference Temperature
	Maximum Pressure	45.5 psig @ 70°F Reference Temperature
MPC-37 Figures 1.2.3a/b/c	Minimum Pressure	45.5 psig @ 70°F Reference Temperature
	Maximum Pressure	49.0 psig @ 70°F Reference Temperature
MPC-37 Figures 1.2.4a/b/c	Minimum Pressure	44.0 psig @ 70°F Reference Temperature
	Maximum Pressure	47.5 psig @ 70°F Reference Temperature
MPC-37 Figures 1.2.5a/b/c	Minimum Pressure	44.5 psig @ 70°F Reference Temperature
	Maximum Pressure	48.0 psig @ 70°F Reference Temperature
MPC-89 Figures 1.2.6a/b	Minimum Pressure	42.0 psig @ 70°F Reference Temperature
	Maximum Pressure	47.0 psig @ 70°F Reference Temperature
MPC-89 Figures 1.2.7a/b	Minimum Pressure	42.0 psig @ 70°F Reference Temperature
	Maximum Pressure	47.0 psig @ 70°F Reference Temperature

Table 4.4.10 MPC HELIUM BACKFILL PRESSURE LIMITS UNDER THE SUB-DESIGN-BASIS HEAT LOAD SCENARIO[Note 1]		
MPC	**Item**	**Specification**
MPC-37 80% of Pattern A	Minimum Pressure	42.0 psig @ 70°F Reference Temperature
	Maximum Pressure	50.0 psig @ 70°F Reference Temperature
MPC-37 90% of Pattern A	Minimum Pressure	42.0 psig @ 70°F Reference Temperature
	Maximum Pressure	47.8 psig @ 70°F Reference Temperature
MPC-89 80% of Table 1.2.4a	Minimum Pressure	42.0 psig @ 70°F Reference Temperature
	Maximum Pressure	50.0 psig @ 70°F Reference Temperature
MPC-37 Table 4.5.1 Threshold Heat Load	Minimum Pressure	42.0 psig @ 70°F Reference Temperature
	Maximum Pressure	50.0 psig @ 70°F Reference Temperature
MPC-89 Table 4.5.1 Threshold Heat Load	Minimum Pressure	42.0 psig @ 70°F Reference Temperature
	Maximum Pressure	50.0 psig @ 70°F Reference Temperature

Note 1: The Sub-Design-Basis heat load scenario is defined in Section 4.4.5.1.

Note 2: Sub-design-basis heat load MPCs are sufficiently backfilled to yield an absolute operating pressure of 6 atm in 80% heat load cases and 6.9 atm in 90% heat load cases.

Note 3: The 80% heat load backfill specifications are suitably adopted for threshold heat load scenarios because the thermal scenarios bound the latter (See Subsection 4.4.5.1).

Table 4.4.11 SUB-DESIGN BASIS HEAT LOAD LIMITS	
MPC-37 (80% of Pattern A in Table 1.2.3a) Region 1 Cells Region 2 Cells Region 3 Cells Total	 0.840 kW/assy 1.360 kW/assy 0.712 kW/assy 35.27 kW
MPC-37 (90% of Pattern A in Table 1.2.3a) Region 1 Cells Region 2 Cells Region 3 Cells Total	 0.945 kW/assy 1.530 kW/assy 0.801 kW/assy 39.68 kW
MPC-89 (80% of Table 1.2.4a) Region 1 Cells Region 2 Cells Region 3 Cells Total	 0.352 kW/assy 0.496 kW/assy 0.352 kW/assy 37.1 kW
Note: The MPC-37 and MPC-89 storage cell regions are defined in Figures 1.2.1a and 1.2.2 respectively.	

Table 4.4.15 DESIGN OPERATING ABSOLUTE PRESSURES[Note 1]	
MPC-37 Loading Pattern A Loading Pattern B	 7.1 atm 7 atm
MPC-32ML	6.5 atm
MPC-89 Table 1.2.4a	7 atm
MPC-37 load Figure 1.2.3a	7.0 atm
MPC-37 heat load Figure 1.2.4a	6.9 atm
MPC-37 heat load Figure 1.2.5a	6.8 atm
MPC-89 heat load Figure 1.2.6a	6.8 atm
MPC-89 heat load Figure 1.2.7a	6.8 atm
Note 1: Table 4.4.8 helium backfill specifications ensure MPC operating pressures meet or exceed design values tabulated herein.	

4.5.2 HI-TRAC VW Thermal Model

4.5.2.1 On-Site Transfer

The HI-TRAC VW transfer cask is used to load and unload the HI-STORM FW concrete storage overpack, including onsite transport of the MPCs from the loading facility to an ISFSI pad. Within a loaded HI-TRAC VW, heat generated in the MPC is transported from the contained fuel assemblies to the MPC shell through the fuel basket and the basket-to-shell gaps via conduction and thermal radiation. From the outer surface of the MPC to the ambient atmosphere, heat is transported within across multiple concentric layers, representing the air gap, the HI-TRAC VW inner shell, the lead shielding, the HI-TRAC VW outer shell, the water jacket space and the jacket shell. From the surface of the HI-TRAC VW's enclosure shell heat is rejected to the atmosphere by natural convection and radiation.

A diametral gap exists between the outer surface of the MPC and the inner surface of the HI-TRAC VW overpack which may be filled with water during an operational state to serve as a heat sink and radiation absorber. The bottom face of the HI-TRAC VW standard version is in contact with a supporting surface which is a thermal heat sink. This face is conservatively modeled as an insulated surface. A water jacket that provides neutron shielding for the HI-TRAC VW overpack is attached to the outer cylindrical steel wall of the HI-TRAC VW standard version and version V. Heat is transported through the water jacket by a combination of conduction through steel ribs and convection heat transfer in the water spaces. A variation of HI-TRAC VW version V is version V2 where the water jacket is removed and replaced with a removable neutron shield cylinder (NSC). All versions of HI-TRAC VW are an open top construction which is modeled as an opening to allow air exchange with the ambient.

The HI-TRAC VW Transfer Cask thermal analysis is based on a detailed heat transfer model that conservatively accounts for all modes of heat transfer in the MPC and HI-TRAC VW. The thermal model incorporates several conservative features listed below:

i. Severe levels of environmental factors - bounding ambient temperature, 32.2°C (90°F), and constant solar flux - were coincidentally imposed on the thermal design. A bounding solar absorbtivity of 0.85 is applied to all exposed surfaces.

ii. The HI-TRAC VW Transfer Cask-to-MPC annular gap is analyzed based on the nominal design dimensions. No credit is considered for the gap reduction that would occur as a result of differential thermal expansion with design basis fuel at hot conditions. The MPC is considered to be concentrically aligned with the cask cavity and the annulus is filled with air. This scenario maximizes thermal resistance.

iii. The HI-TRAC VW baseplate is in thermally communicative contact with supporting surfaces. For conservatism an insulated boundary condition is applied to the baseplate.

iv. The HI-TRAC VW fluid columns (namely air in the annulus and water in the water jacket) are allowed to move. In other words natural convection heat transfer by annulus air and water is credited in the analysis.

v. To maximize lateral resistance to heat dissipation in the fuel basket conservatively postulated 0.8 mm full length panel gaps are assumed at all intersections. This approach is similar to the approach in the approved HI-STAR 180 Package in Docket 71-9325. The shims installed in the MPC peripheral spaces (See MPC-37 and MPC-89 drawings in Section 1.5) are explicitly modeled. For conservatism reasonably bounding gaps are incorporated in the thermal models.

vi. For HI-TRAC VW standard version, the Raleigh number of air flow in the annulus between the MPC and HI-TRAC VW indicates that the flow regime in this region is laminar. Therefore, the air flow in this region is modeled as laminar in the thermal model.

The grid deployed in the HI-TRAC VW thermal model is confirmed to be grid independent through mesh sensitivity studies. The studies refined the radial mesh in HI-TRAC VW annulus and water jacket regions. The thermal solutions obtained show that the temperatures are essentially unchanged.

To evaluate on-site transfer operations in a conservative manner a HI-TRAC VW thermal model is constructed under the limiting scenario of fuel storage in the minimum height MPC-37 (See Section 4.4.1.5) and limiting Pattern A heat load specified in Chapter 1, Section 1.2 (See Section 4.4.4). The model adopts the MPC thermal modeling methodology described in Section 4.4 and the properties of design basis 14x14 Ft. Calhoun fuel defined in Table 4.4.1 under the limiting fuel storage scenario cited above. Results of on-site transfer analyses are provided in Subsection 4.5.4.3.

As explained in Chapter 1, Version V of the HI-TRAC VW transfer cask differs from the standard version only in respect of a larger MPC-to-cask radial gap and a natural ventilation path for ambient air to flow past the canister shell which results in a greater extraction of heat from the canister. A FLUENT thermal analysis of the “Version V” configuration for the Design Basis heat load for the governing canister (MPC-37), shows that peak cladding temperature and MPC cavity pressure are lower than that for the HI-TRAC VW standard version (results for Version V are added to Table 4.5.2 and Table 4.5.5) which confirms the improved heat extraction efficacy of Version V. The FLUENT thermal model is in compliance with the licensing-basis model described in the foregoing. The results summarized in Tables 4.5.2 and 4.5.5 show that, from the thermal safety standpoint, Version V provides a larger margin of safety than the predecessor HI-TRAC VW versions adopted in this FSAR.

Similar to HI-TRAC VW Version V, HI-TRAC VW Version V2 is also designed with a larger MPC-to-cask radial gap and a natural ventilation path for ambient air to flow past the canister shell. In addition, the HI-TRAC VW Version V2 adopts a neutron shielding cylinder (NSC)

instead of a water jacket. The annular gap between the HI-TRAC VW outer shell and the NSC provides a natural ventilation path for ambient air to flow past the HI-TRAC VW outer shell. The air flow in both annulus regions is modeled as turbulent with k-ω turbulence model. A steady state analysis is performed for the limiting thermal scenario of MPC-37 inside the HI-TRAC VW under heat load pattern A. The computed fuel cladding temperature and MPC cavity pressure are summarized in Tables 4.5.23 and 4.5.24, which are essentially the same as those in Tables 4.5.2 and 4.5.5 for the HI-TRAC VW standard version.

4.5.2.2 Grid Sensitivity Studies

Cognizant to the grid sensitivity studies performed for the HI-STORM FW System discussed in Section 4.4, a similar study is performed for the HI-TRAC VW System. This study is also performed in accordance with the ASME V&V method [4.4.3]. The grid sensitivity study is performed for the limiting thermal scenario i.e. MPC-37 with minimum fuel length and loaded with pattern A. All the three meshes used for this study satisfy the recommended criterion of 1.3 as the grid refinement factor [4.4.3]. The predicted PCT from these three meshes is essentially the same and are reported in the table below:

Mesh No	Total Mesh Size	PCT (°C)	Permissible Limit (°C)	Clad Temperature Margin (°C)
1 (Licensing Basis Mesh)	1,267,474	389	400	11
2	2,678,012	390	400	10
3	5,797,030	389	400	11

The solutions from these grids are in the asymptotic range. The finest mesh (Mesh 3) has about 4.6 times the total mesh size of the licensing basis mesh (Mesh 1). Even with such a large mesh refinement, the PCT is essentially same for all the three meshes. Since the difference of PCT for all these meshes is close to zero, it indicates that an oscillatory convergence or that the “exact” solution has been attained [4.5.1]. To provide further assurance of convergence, grid convergence index (GCI), which is a measure of the solution uncertainty, is computed as 0.566%. The apparent order of the method is calculated as 1.2.

Based on the above results, it can be concluded that the Mesh 1 is reasonably converged and is adopted as the licensing basis converged mesh.

4.5.2.3 Vacuum Drying

The initial loading of SNF in the MPC requires that the water within the MPC be drained and

replaced with helium. For MPC-37, MPC-32ML and MPC-89 containing moderate burnup fuel assemblies only, this operation may be carried out using the conventional vacuum drying approach without time limits upto design basis heat load. In this method, removal of moisture from the MPC cavity is accomplished by evacuating the MPC after completion of MPC draining operation. Vacuum drying of MPC-37, MPC-32ML & MPC-89 containing high burnup fuel assemblies is permitted without time limit up to threshold heat loads defined in Table 4.5.1 and 4.5.16. As described subsequently in this chapter, vacuum drying with time limits is allowed for all MPCs containing HBF greater than threshold heat loads. Table 4.5.19 provides a summary of vacuum drying conditions.

Prior to the start of the MPC draining operation, both the HI-TRAC VW annulus and the MPC are full of water. The presence of water in the MPC ensures that the fuel cladding temperatures are lower than design basis limits by large margins. As the heat generating active fuel length is uncovered during the draining operation, the fuel and basket mass will undergo a gradual heat up from the initially cold conditions when the heated surfaces were submerged under water. To minimize fuel temperatures during vacuum drying operations the HI-TRAC VW annulus must be water filled. The necessary operational steps required to ensure this requirement are set forth in Chapter 9.

A 3-D FLUENT thermal model of the MPC is constructed in the same manner as described in Section 4.4.1. The principal input to this model is the effective conductivity of fuel under vacuum drying operations. To bound the vacuum drying operations the effective conductivity of fuel is computed assuming the MPC is filled with water vapor at a very low pressure (1 torr). The methodology for computing the effective conductivity is given in Section 4.4.1 and effective properties of design basis fuel under vacuum conditions tabulated in Table 4.5.8. To ensure a conservative evaluation the thermal model is incorporated with the following assumptions:

i. Bounding steady-state condition is reached with the MPC decay heat load set equal to the limiting heat load (Pattern A in Tables 1.2.3a and 1.2.4a) for MPCs fueled with Moderate Burnup Fuel and threshold heat load defined in Table 4.5.1 for MPCs fueled with one or more High Burnup fuel assemblies.

ii. The external surface of the MPC shell is postulated to be at the boiling temperature of water 100°C (212°F).

iii. The bottom surface of the MPC is insulated.

iv. MPC internal convection heat transfer is suppressed.

Results of vacuum condition analyses are provided in Subsection 4.5.4.1.

1 The MPC thermal model adopted for vacuum drying analysis in this sub-section includes the gap between the intersecting basket panels as 0.4 mm. A sensitivity study of the most limiting thermal scenario (least margins to fuel temperature limit) of vacuum drying condition is performed with this gap as 0.8 mm and discussed in Sub-section 4.5.4.4.

If the peak cladding temperature cannot be maintained below the ISG-11, Revision 3 limit under a vacuum condition of infinite duration, cycles of vacuum drying resulting in heatup followed with cooling by helium are performed until drying criteria specified in Chapter 9 is achieved. The thermal model described in this section must be used to compute permissible time duration available to perform the heatup/cooldown cycles for a cask-specific decay heat loads. It must also be ensured per ISG-11 Rev 3 that the repeated thermal cycling is limited to less than 10 cycles, with cladding temperature variations less than 65°C (117°F) each. It must be noted that the permissible time for heatup/cooldown cycles is a function of cask specific heat loads. At lower heat loads the duration of vacuum drying cycles is increased and if the heat load is low enough, then the peak cladding temperature may remain below the ISG-11 limit under vacuum conditions indefinitely eliminating the need for cycling.

Following is a summary of the methodology and assumptions for multiple vacuum drying cycles:

i. The initial condition of the cask for vacuum drying is conservatively assumed to be at boiling temperature of water i.e. 100°C (212°F).

ii. Cask specific heat load and ambient conditions must be used.

iii. The cask bottom is assumed to be insulated.

iv. Cycle 1 (Heatup) – A transient thermal evaluation is performed for the cask-specific decay heat distribution with the cask cavity under vacuum condition. The time required for the fuel to heatup from an initial temperature of 100°C (212°F) to 380°C (716°F) for High Burnup Fuel (HBF) and 550°C (1022°F) for Moderate Burnup Fuel (MBF) is determined. If drying completion criteria is not met, then the cask cavity must be backfilled with helium for cooldown before it reaches the ISG-11 Rev 3 temperature limit of 400°C (752°F) for HBF or 570°C (1058°F) for MBF.

v. Cycle 1 (Cooldown) – The cask cavity is backfilled with helium to 1 atm absolute pressure. Fuel cooling under helium is evaluated until the fuel temperature decreases by 65°C (117°F) and the maximum permissible time is obtained from the transient evaluation.

vi. The drying process should return to vacuum drying again which now is the beginning of second cycle. Up to 9 additional multiple cycles of drying may be performed until the drying completion criteria is met.

vii. If a total of 10 drying cycles fail to meet drying criteria then other competent means to dry fuel (like FHD discussed in Subsection 4.5.4.2) must be used or the cask must be de-fueled.

As an example of cyclic drying, 3D thermal evaluation is performed using the methodology described above for a bounding condition of short MPC-37 with High Burnup Fuel under heat

load pattern A. The permissible time for each heatup and cooldown cycles are presented in Table 4.5.25. The variation of peak fuel cladding temperature under vacuum and helium conditions is graphed in Figure 4.5.1.

4.5.3 Maximum Time Limit During Wet Transfer Operations

In accordance with NUREG-1536, water inside the MPC cavity during wet transfer operations is not permitted to boil. This requirement is met by imposing time limits for fuel to remain submerged in water after a loaded HI-TRAC VW cask is removed from the pool.

Fuel loading operations are typically conducted with the HI-TRAC VW and its contents (water filled MPC) submerged in pool water. Under these conditions, the HI-TRAC VW is essentially at the pool water temperature. When the HI-TRAC VW transfer cask and the loaded MPC under water-flooded conditions is removed from the pool, the water, fuel, MPC and HI-TRAC VW metal absorb the decay heat emitted by the fuel assemblies. This results in a slow temperature rise of the HI-TRAC VW with time, starting from an initial (pool water) temperature. The rate of temperature rise is limited by the thermal inertia of the HI-TRAC VW system. To enable a bounding heat-up rate determination, the following conservative assumptions are utilized:

i. Heat loss by natural convection and radiation from the exposed HI-TRAC VW surfaces to ambient air is neglected (i.e., an adiabatic heat-up calculation is performed).

ii. Design maximum heat input from the loaded fuel assemblies is assumed.

iii. The shortest allowable HI-TRAC VW is credited in the analysis to impart the lowest thermal inertia on the system, which will result in the highest rate of temperature rise.

iv. The water mass is in the MPC cavity is understated.

Table 4.5.3 summarizes the weights and thermal inertias of several components in the loaded HI-TRAC VW transfer cask that corresponds to the shortest allowable fuel assembly. The rate of temperature rise of the HI-TRAC VW transfer cask and contents during an adiabatic heat-up is governed by the following equation:

$$\frac{dT}{dt} = \frac{Q}{C_h}$$

where:

Q = conservatively bounding heat load (Btu/hr)
C_h = thermal inertia of a loaded HI-TRAC VW (Btu/°F)

T = temperature of the HI-TRAC VW transfer cask (°F)
t = time after MPC lid is placed (hr)

From this adiabatic rate of temperature rise estimate, the maximum allowable time duration (t_{max}) for fuel to be submerged in water is determined as follows:

$$t_{max} = \frac{T_{boil} - T_{initial}}{(dT/dt)}$$

where:

T_{boil} = boiling temperature of water (equal to 212°F at the water surface in the MPC cavity)
$T_{initial}$ = initial pool water temperature when the lid is placed on the MPC (°F)

The time-to-boil clock starts when the lid is placed on the MPC and the HI-TRAC is in the spent fuel pool, while it ends when the MPC is drained (See section 9.2.4). Table 4.5.4 provides a summary of t_{max} at several representative initial temperatures. The time-to-boil calculations are conservatively performed for the HI-TRAC VW that corresponds to shortest allowed fuel assembly since lowerbound thermal inertia results in lower time limits. A site-specific time-to-boil calculation can be performed using the above equations based on the actual canister heat load and thermal inertia of the specific HI-TRAC VW System.

As set forth in the HI-STORM FW operating procedures, in the unlikely event that the maximum allowable time provided in Table 4.5.3 is found to be insufficient to complete all wet transfer operations, a forced water circulation shall be initiated and maintained to remove the decay heat from the MPC cavity. In this case, relatively cooler water will enter via MPC lid ports and heated water will exit from the vent port. The minimum water flow rate required to maintain the MPC cavity water temperature below boiling with an adequate subcooling margin is determined as follows:

$$M_W = \frac{Q}{C_{pW}(T_{max} - T_{in})}$$

where:

M_W = minimum water flow rate (lb/hr)
C_{pw} = water heat capacity (Btu/lb-°F)
T_{max} = suitably limiting temperature below boiling (°F)
T_{in} = water supply temperature to MPC

An alternate method using the FLUENT thermal model described in Section 4.5.1 can be adopted to evaluate the time for water within the MPC to boil using site-specific conditions. Principal modeling steps and acceptance criteria are defined in Table 4.5.22.

4.5.4 Analysis of Limiting Thermal States During Short-Term Operations

4.5.4.1 Vacuum Drying

The vacuum drying option is evaluated for the limiting scenarios defined in Section 4.4.1.5 to address Moderate Burnup Fuel and High Burnup Fuel under threshold heat load defined in Table 4.5.1 (MPC-37 and MPC-89) and Table 4.5.16 (MPC-32ML). The principle objective of the analysis is to ensure compliance with ISG-11 temperature limits. For this purpose 3-D FLUENT thermal models of the MPC-37, MPC-32ML, and MPC-89 canisters are constructed as described in Section 4.5.2.2 and bounding steady state temperatures computed. The results are tabulated in Tables 4.5.6, 4.5.7, 4.5.17, 4.5.20 and 4.5.21. The results show that the cladding temperatures comply with the ISG-11 limits for moderate and high burnup fuel in Table 4.3.1 by robust margins. The analysis presented above supports MPC drying options as summarized in Table 4.5.19.

4.5.4.2 Forced Helium Dehydration

To reduce moisture to trace levels in the MPC using a Forced Helium Dehydration (FHD) system, a conventional, closed loop dehumidification system consisting of a condenser, a demoisturizer, a compressor, and a pre-heater is utilized to extract moisture from the MPC cavity through repeated displacement of its contained helium, accompanied by vigorous flow turbulation. Demoisturization to the 3 torr vapor pressure criteria required by NUREG 1536 is assured by verifying that the helium temperature exiting the demoisturizer is maintained at or below the psychrometric threshold of 21°F for a minimum of 30 minutes. Appendix 2.B of [4.1.8] provides a detailed discussion of the design criteria and operation of the FHD system.

The FHD system provides concurrent fuel cooling during the moisture removal process through forced convective heat transfer. The attendant forced convection-aided heat transfer occurring during operation of the FHD system ensures that the fuel cladding temperature will remain below the applicable peak cladding temperature limit in Table 2.2.3. Because the FHD operation induces a state of forced convection heat transfer in the MPC, (in contrast to the quiescent mode of natural convection in long term storage), it is readily concluded that the peak fuel cladding temperature under the latter condition will be greater than that during the FHD operation phase. In the event that the FHD system malfunctions, the forced convection state will degenerate to natural convection, which corresponds to the conditions of normal onsite transfer. As a result, if the FHD machine fails then the peak fuel cladding temperatures will approximate the value reached during normal onsite transfer, discussed below.

4.5.4.3 Normal On-site Transfer

An MPC-37 situated inside a HI-TRAC VW is evaluated under the design heat load defined in Section 1.2. The MPC-37 is evaluated because it yields the highest fuel and cask temperatures (See Table 4.4.2). This scenario is analyzed using the same 3D FLUENT model of the MPC-37 articulated in Section 4.4 for normal storage with due recognition of it situated in the HI-TRAC VW transfer cask. The HI-TRAC VW model discussed in Section 4.5.2 is adopted to construct a global model of an MPC-37 situated inside the HI-TRAC VW and dissipating heat by natural

4.5.4.8 Normal On-site Transfer inside a Building

Normal on-site transfer using the HI-TRAC VW can be carried out inside a building. When HI-TRAC VW is located inside a building, the ambient air temperature inside the building could be higher than the outdoor environment temperature used in the thermal evaluations performed in Subsection 4.5.4.3. To evaluate this scenario, an ambient temperature that corresponds to the maximum indoor air temperature specified in Table 2.2.2 for short term operations is assumed. Since the cask is inside a building, no solar insolation is applied to the cask. A steady state analysis is performed for the limiting thermal scenario of MPC-37 inside the HI-TRAC VW under heat load pattern A. The peak cladding, MPC and the HI-TRAC component temperatures are presented in Table 4.5.9 in addition to the MPC cask cavity pressure. The predicted component temperatures and MPC cavity pressure are below their respective temperatures and pressure for outdoor environment presented in Tables 4.5.2 and 4.5.5 respectively. Therefore, the normal on-site transfer of a HI-TRAC outside the building and with solar insolation as evaluated in Subsection 4.5.4.3 is the limiting thermal condition for HI-TRAC VW standard version.

4.5.5 Cask Cooldown and Reflood Analysis During Fuel Unloading Operation

NUREG-1536 requires an evaluation of cask cooldown and reflood procedures to support fuel unloading from a dry condition. Past industry experience generally supports cooldown of cask internals and fuel from hot storage conditions by direct water quenching. Direct MPC cooldown is effectuated by introducing water through the lid drain line. From the drain line, water enters the MPC cavity near the MPC baseplate. Steam produced during the direct quenching process will be vented from the MPC cavity through the lid vent port. To maximize venting capacity, both vent port RVOA connections must remain open for the duration of the fuel unloading operations. As direct water quenching of hot fuel results in steam generation, it is necessary to limit the rate of water addition to avoid MPC overpressurization. For example, steam flow calculations using bounding assumptions (100% steam production and MPC at design pressure) show that the MPC is adequately protected under a reflood rate of 3715 lb/hr. Limiting the water reflood rate to this amount or less would prevent exceeding the MPC design pressure.

4.5.6 Maximum Internal Pressure (Load Case NB in Table 2.2.7)

After fuel loading and vacuum drying, but prior to installing the MPC closure ring, the MPC is initially filled with helium. During handling and on-site transfer operations in the HI-TRAC VW transfer cask, the gas temperature will correspond to the thermal conditions within the MPC analyzed in Section 4.5.4.3. Based on this analysis the MPC internal pressure is computed under the assumption of maximum helium backfill specified in Table 4.4.8 and confirmed to comply with the short term operations pressure limit in Table 2.2.1. The results are tabulated in Table 4.5.5.

TABLE 4.5.1 THRESHOLD HEAT LOADS UNDER VACUUM DRYING OF HIGH BURNUP FUEL (See Figures 1.2.1a and 1.2.2)			
MPC-37			
Number of Regions:	3		
Number of Storage Cells:	37		
Maximum Heat Load:	29.6 kW		
Region No.	Decay Heat Limit per Cell, kW	Number of Cells per Region	Decay Heat Limit per Region, kW
1	0.80	9	7.2
2	0.80	12	9.6
3	0.80	16	12.8
MPC-89			
Number of Regions:	3		
Number of Storage Cells:	89		
Maximum Heat Load:	30 kW		
Region No.	Decay Heat Limit per Cell, kW	Number of Cells per Region	Decay Heat Limit per Region, kW
1	0.337	9	3.03
2	0.337	40	13.48
3	0.337	40	13.48

Table 4.5.2

HI-TRAC VW TRANSFER CASK STEADY STATE MAXIMUM TEMPERATURES

Component	**Temperature, ºC (ºF)**	
	Standard HI-TRAC VW	Standard HI-TRAC VW with Version V Features
Fuel Cladding	389 (732)	375 (707)
MPC Basket	374 (705)	360 (680)
Basket Periphery	299 (570)	289 (552)
Aluminum Basket Shims	272 (522)	268 (514)
MPC Shell	247 (477)	238 (460)
MPC Lid[Note 1]	240 (464)	238 (460)
HI-TRAC VW Inner Shell	138 (280)	102 (216)
HI-TRAC VW Radial Lead Gamma Shield	138 (280)	101 (214)
Water Jacket Bulk Water	129 (264)	92 (198)

Note 1: Maximum section average temperature is reported.

Table 4.5.5

MPC CONFINEMENT BOUNDARY PRESSURE UNDER ON-SITE TRANSPORT

Condition	**Pressure (psig)**
Initial backfill pressure (at 70°F) (Tech. Spec. maximum in Table 4.4.8)	45.5
Maximum pressure	
- Standard HI-TRAC VW	100.7
- Version V of HI-TRAC VW	97.6

Table 4.5.6

MAXIMUM TEMPERATURES OF MPC-37 DURING VACUUM DRYING CONDITIONS

Component	**Temperatures @DB Heat Load[Note 1] °C (°F)**	**Temperatures @ Threshold Heat Load[Note 2] °C (°F)**
Fuel Cladding	480 (896)	384 (723)
MPC Basket	464 (867)	367 (693)
Basket Periphery	357 (675)	288 (550)
Aluminum Basket Shims	278 (532)	232 (450)
MPC Shell	156 (313)	142 (288)
MPC Lid[Note 3]	107 (225)	100 (212)

Note 1: Addresses vacuum drying of Moderate Burnup Fuel under limiting heat load (Pattern A) defined in Section 1.2 under heat load Table 1.2.3a Limiting Pattern A. See Table 4.5.20 for evaluation of alternate heat load patterns defined in Section 1.2.3.
Note 2: Addresses vacuum drying of High Burnup Fuel under threshold heat load (Table 4.5.1). For conservatism heat load applied to FLUENT models is overstated.
Note 3: Maximum section temperature reported.

Table 4.5.7

MAXIMUM TEMPERATURES OF MPC-89 DURING VACUUM DRYING CONDITIONS

Component	**Temperatures @DB Heat Load[Note 1] ºC (ºF)**	**Temperatures @ Threshold Heat Load[Note 2] ºC (ºF)**
Fuel Cladding	464 (867)	376 (709)
MPC Basket	449 (840)	359 (678)
Basket Periphery	348 (658)	286 (547)
Aluminum Basket Shims	275 (527)	232 (450)
MPC Shell	158 (316)	144 (291)
MPC Lid[Note 3]	127 (261)	110 (230)

Note 1: Addresses vacuum drying of Moderate Burnup Fuel under Design Basis heat load defined in Section 1.2 under heat load Table 1.2.4a. See Table 4.5.21 for evaluation of alternate heat load patterns defined in Section 1.2.3.
Note 2: Addresses vacuum drying of High Burnup Fuel under threshold heat load (Table 4.5.1). For conservatism heat load applied to FLUENT models is overstated.
Note 3: Maximum section temperature reported.

Table 4.5.8 EFFECTIVE CONDUCTIVITY OF DESIGN BASIS FUEL UNDER VACUUM DRYING OPERATIONS (Btu/hr-ft-ºF)		
Ft. Calhoun 14x14[Note 1]		
Temperature (ºF)	Planar	Axial
200	0.125	0.726
450	0.265	0.793
700	0.498	0.886
	0.623@800 ºF	1.024@1000 ºF
Note 1: Ft. Calhoun 14x14 fuel is defined as the design basis fuel under the limiting condition of fuel storage in the minimum height MPC-37 (See Table 4.4.2).		
16x16D[Note 2]		
Temperature (ºF)	Planar	Axial
212	0.095	0.8
450	0.229	0.867
700	0.458	0.962
785	0.558	1.003
BWR Fuel		
Temperature (ºF)	Planar	Axial
200	0.112	1.004
450	0.236	1.095
700	0.441	1.221
	0.553@800 ºF	1.408@1000 ºF
Note 2: Design Basis MPC-32ML fuel		

Table 4.5.18

(Deleted)

Table 4.5.19
MPC DRYING OPERATIONS

MPC Type	Fuel	Heat Load Limit (kW)	Method of Drying
MPC-32ML	MBF	44.16 (Note 1)	FHD/Vacuum Drying without Time Limit
	HBF	44.16 (Note 1)	FHD/Vacuum Drying with Time Limit
		28.704	FHD/Vacuum Drying without Time Limit
MPC-37	MBF	44.09 (Pattern A) 45.0 (Pattern B) 37.4/39.95/44.85 (Figures 1.2.3a, 1.2.4a, 1.2.5a) 34.4 (Figures 1.2.3b/c) 36.65 (Figures 1.2.4b/c) 40.95 (Figures 1.2.5b/c) (Note 1)	FHD/Vacuum Drying without Time Limit
	HBF	44.09 (Pattern A) 45.0 (Pattern B) (Note 1)	FHD/Vacuum Drying with Time Limit
		29.6	FHD/Vacuum Drying without Time Limit
MPC-89	MBF	46.36 (Table 1.2.4a) 46.2 (Figure 1.2.6a) 44.92 (Figure 1.2.6b) 46.14 (Figure 1.2.7a) 44.98 (Figure 1.2.7b) (Note 1)	FHD/ Vacuum Drying without Time Limit
	HBF	46.36 (Note 1)	FHD/Vacuum Drying with Time Limit
		30	FHD/Vacuum Drying without Time Limit

Note 1: Design Basis heat load.
Note 2:Cyclic drying under time limited vacuum drying operations is permitted in accordance with ISG-11, Rev. 3 requirements by limiting number of cycles to less than 10 and cladding temperature variations to less than 65°C (117°F). Suitable time limits for these cycles shall be evaluated based on site specific conditions and thermal methodology defined in Section 4.5.

Table 4.5.20 MAXIMUM TEMPERATURES OF MPC-37 DURING VACUUM DRYING CONDITIONS UNDER SHORT FUEL HEAT LOAD FIGURE 1.2.3a (Note 3)	
Component	Temperature ºC (ºF)[Note 1]
Fuel Cladding	465 (869)
MPC Basket	412 (774)
Basket Periphery	335 (635)
Aluminum Basket Shims	272 (522)
MPC Shell	165 (329)
MPC Lid[Note 2]	100 (212)
Note 1: Addresses vacuum drying of Moderate Burnup Fuel Note 2: Section temperature reported Note 3: Bounding scenario of short fuel from Table 4.4.2 is evaluated.	

Table 4.5.21 MAXIMUM TEMPERATURES OF MPC-89 DURING VACUUM DRYING CONDITIONS UNDER HEAT LOAD FIGURE 1.2.6a (Note 3)	
Component	Temperature ºC (ºF)[Note 1]
Fuel Cladding	469 (876)
MPC Basket	449 (840)
Basket Periphery	362 (684)
Aluminum Basket Shims	305 (581)
MPC Shell	181 (358)
MPC Lid[Note 2]	119 (246)
Note 1: Addresses vacuum drying of Moderate Burnup Fuel Note 2: Section temperature reported Note 3: Bounds heat load Figure 1.2.7a.	

Table 4.5.22 PRINCIPAL SITE-SPECIFIC TIME-TO-BOIL MODELING STEPS	
Step 1: Site Specific Conditions	Heat Loads Site Specific heat load map Ambient Temperature – Fuel handling building air temperature Initial Water Temperature – Candidate temperature defined by cask user HI-TRAC VW Insolation – None
Step 2: FLUENT Thermal Model	Incorporate HI-TRAC VW thermal methodologies (i) thru (iv) defined in Section 4.5.2.3 and use the licensing basis HI-TRAC VW thermal model presented in [4.1.9]
Step 3: Run FLUENT Model	Apply thermal loads defined in Step 1 and compute the time dependent temperature field starting from the initial temperature defined in Step 1.
Step 4: Post-Process Results	Post-process FLUENT solution and obtain bulk water temperature $T_b(\tau)$ as a function of time τ. Interpolate $T_b(\tau)$ to compute maximum permissible time-to-boil τ^* meeting $T_b(\tau^*) < 212^oF$.

Table 4.5.23 HI-TRAC VW Version V2 TRANSFER CASK STEADY STATE MAXIMUM TEMPERATURES	
Component	**Temperature, ºC (ºF)**
Fuel Cladding	389 (732)
MPC Basket	374 (705)
Basket Periphery	304 (579)
Aluminum Basket Shims	292 (558)
MPC Shell	258 (496)
MPC Lid[Note 2]	249 (480)
HI-TRAC VW Inner Shell	168 (334)
NSC Inner Shell	137 (279)
NSC Holtite	137 (279)
Note 1: Bounding scenario for Version V2 presented herein. Note 2: Maximum section average temperature is reported.	

Table 4.5.24 HI-TRAC VW Version V2 MPC CONFINEMENT BOUNDARY PRESSURE UNDER ON-SITE TRANSPORT	
Condition	**Pressure (psig)**
Initial backfill pressure (at 70°F) (Tech. Spec. maximum in Table 4.4.8)	45.5
Maximum pressure	99.7

Table 4.5.25 PERMISSIBLE TIME FOR MULTIPLE VACUUM DRYING CYCLES FOR MPC-37	
Cycle	**Time (hours)**
Cycle 1 – Heat-Up (Vacuum Drying)	14.1
Cycle 1 – Cooldown (Helium)	7.75
Cycle 2 – Heat-Up (Vacuum Drying)	5.1
Note: The temperature versus time behavior in cycle 1 cooldown and cycle 2 heatup repeats itself in subsequent cycles.	

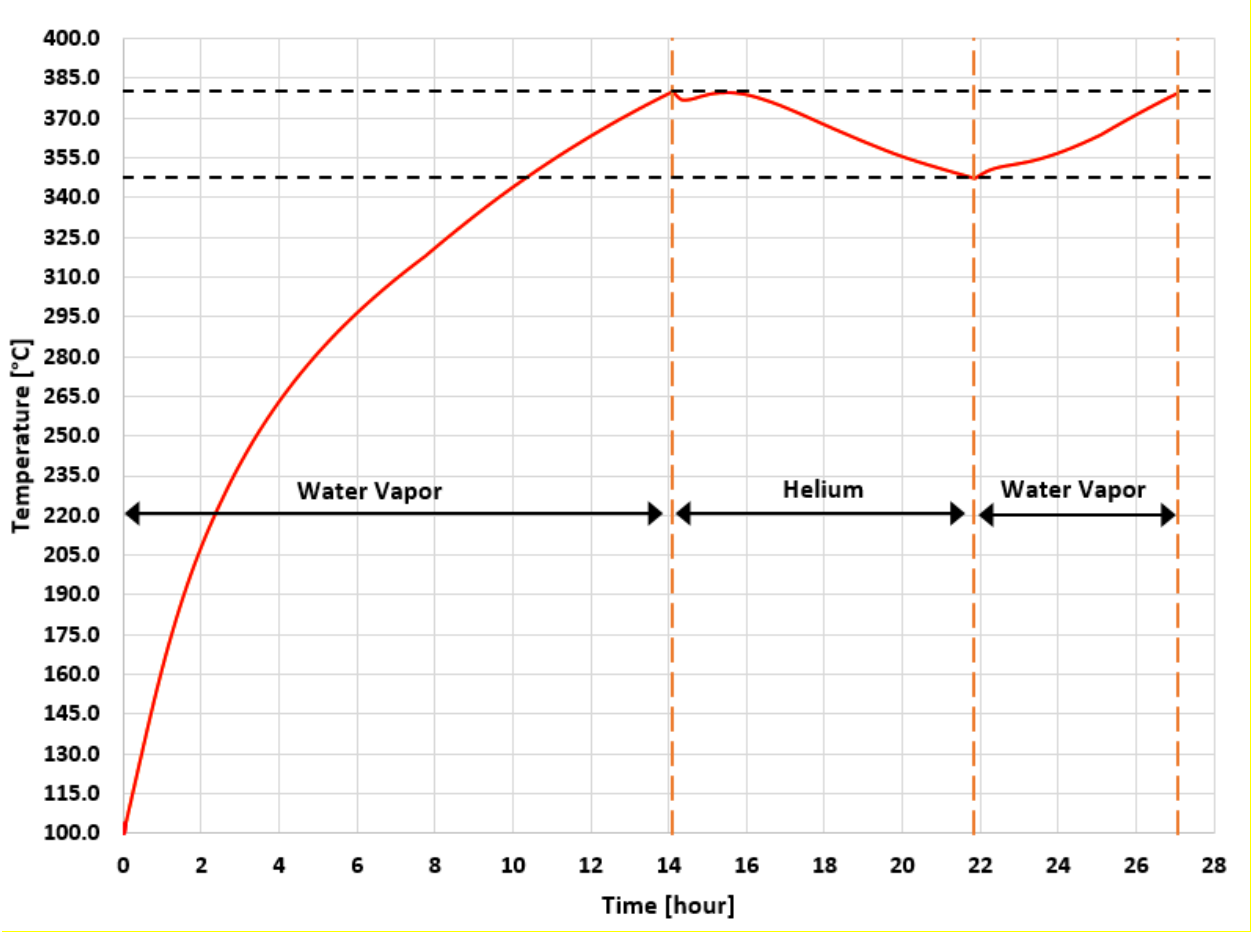

Figure 4.5.1: Variation of PCT with Time during Cyclic Vacuum Drying of MPC-37 with Short Fuel under Heat Load Pattern A

extreme temperature is assumed to last for a sufficient duration to allow the HI-STORM FW system to reach steady state conditions. Because of the large mass of the HI-STORM FW system, with its corresponding large thermal inertia and the limited duration for the extreme temperature, this assumption is conservative. Starting from a baseline condition evaluated in Section 4.4 (normal ambient temperature and limiting fuel storage configuration) the temperatures of the HI-STORM FW system are conservatively assumed to rise by the difference between the extreme and normal ambient temperatures (45°F). The HI-STORM FW extreme ambient temperatures computed in this manner are reported in Table 4.6.4. The co-incident MPC pressure is also computed (Table 4.6.7) and compared with the accident design pressure (Table 2.2.1), which shows a positive safety margin. The result is confirmed to be below the accident limit.

4.6.2.4 100% Blockage of HI-STORM Air Inlets

This event is defined as a complete blockage of all eight bottom inlets for a significant duration (32 hours). The immediate consequence of a complete blockage of the air inlets is that the normal circulation of air for cooling the MPC is stopped. An amount of heat will continue to be removed by localized air circulation patterns in the overpack annulus and outlet ducts, and the MPC will continue to radiate heat to the relatively cooler storage overpack. As the temperatures of the MPC and its contents rise, the rate of heat rejection will increase correspondingly. Under this condition, the temperatures of the overpack, the MPC and the stored fuel assemblies will rise as a function of time.

As a result of the considerable inertia of the storage overpack, a significant temperature rise is possible if the inlets are substantially blocked for extended durations. This accident condition is, however, a short duration event that is identified and corrected through scheduled periodic surveillance. Nevertheless, this event is conservatively analyzed assuming a substantial duration of blockage. The HI-STORM FW thermal model is the same 3-Dimensional model constructed for normal storage conditions (see Section 4.4) except for the bottom inlet ducts, which are assumed to be impervious to air. Using this model, a transient thermal solution of the HI-STORM FW system starting from normal storage conditions is obtained. The results of the blocked ducts transient analysis are presented in Table 4.6.5 and compared against the accident temperature limits (Table 2.2.3). The co-incident MPC pressure (Table 4.6.7) is also computed and compared with the accident design pressure (Table 2.2.1). All computed results are well below their respective limits.

4.6.2.5 Burial Under Debris (Load Case AG in Table 2.2.13)

Burial of the HI-STORM FW system under debris is not a credible accident. During storage at the ISFSI there are no structures that loom over the casks whose collapse could completely bury the casks in debris. Minimum regulatory distances from the ISFSI to the nearest ISFSI security fence precludes the close proximity of substantial amount of vegetation. There is no credible

to block air flow through the bottom ducts, the lower region of the MPC will be submerged in the water. Although heat transport through air circulation is cut off in this scenario, the reduction is substantially offset by flood water cooling.

The MPCs are equipped with the thermosiphon capability, which brings the heat emitted by the fuel to the bottom region of the MPC as the circulating helium flows along the downcomer space around the basket. This places the heated helium in close thermal communication with the flood water, further enhancing convective cooling via the flood water.

The most adverse flood condition exists when the flood waters are high enough to block the inlet ducts but no higher. In this scenario, the MPC surface has minimum submergence in water and the ventilation air is completely blocked. In fact, as the flood water begins to accumulate on the ISFSI pad, the air passage size in the inlet vents is progressively reduced. Therefore, the rate of floodwater rise with time is necessary to analyze the thermal-hydraulic problem. For the reference design basis flood (DBF) analysis in this FSAR, the flood waters are assumed to rise instantaneously to the height to block the inlet vents and stay at that elevation for 32 hours. The consequences of the DBF event is bounded by the 100% blocked ducts events evaluated in Section 4.6.2.4. If the duration of the flood blockage exceeds the DBF blockage duration then a site specific evaluation shall be performed in accordance with the methodology presented in this Chapter and evaluated for compliance with Subsection 2.2.3 criteria.

4.6.2.7 100% Air Inlet Blockage of HI-TRAC VW Versions V and V2

As illustrated in the Licensing drawings of HI-TRAC VW Versions V and V2 listed in Section 1.5, the inlet flow passages in HI-TRAC ("the Cask") are not discrete vents; rather they are radially symmetric passages. The outlet is essentially an unhindered annular opening to ambient air above the cask as the design does not require a cover or lid that would otherwise restrict air exit. The ventilation action through the MPC/Cask annulus is entirely by natural convection. It is not credible to postulate that these circumferentially extant passages can be entirely blocked during the transport of the cask from the Fuel Building to the ISFSI pad. However, as a study to support a defense-in-depth approach, an evaluation is presented below assuming that inlet flow passages are 100% blocked. As a result of the considerable inertia of the storage overpack, a significant temperature rise is possible if the inlets are substantially blocked for extended durations. This accident condition is, however, a short duration event that is identified and corrected through scheduled periodic surveillance.

The FLUENT thermal model described in Section 4.5 is adopted to evaluate the temperature rise of the components of the HI-TRAC VW Versions V and V2 casks, by completely blocking the air flow at the inlet vents. A steady state evaluation of Version V is performed, and results are presented in Table 4.6.8 of the FSAR.

However, a steady state thermal evaluation of blockage of Version V2 inlet vents at design basis maximum heat loads result in component temperatures (like Holtite in NSC) exceeding its

temperature limit. Therefore, a transient evaluation is instead performed such that all component temperatures and MPC cavity pressure remain below their accident limits. The computed allowable time is presented in Table 4.6.9 and the associated temperature results are presented in Table 4.6.10.

The results of the CFD analysis of both versions demonstrate that all component temperatures are below their respective accident temperature limits. The MPC cavity pressures presented in Table 4.6.7 are also below the accident design pressure.

Table 4.6.7 OFF-NORMAL AND ACCIDENT CONDITION MAXIMUM MPC PRESSURES	
Condition	**Pressure (psig)**
Off-Normal Conditions	
Off-Normal Pressure[1]	110.0
Partial Blockage of Inlet Ducts	99.9
Accident Conditions	
HI-TRAC VW fire accident	103.3
Extreme Ambient Temperature	101.7
100% Blockage of Air Inlets	116.4
Burial Under Debris	130.8
HI-TRAC VW Jacket Water Loss	109.5
100% Blockage of HI-TRAC VW Version V2 Air Inlets	105.4
100% Blockage of HI-TRAC VW Version V Air Inlets	104.4

1 The off-normal pressure event defined in Section 4.6.1.1 bounds the off-normal ambient temperature event (Section 4.6.1.2)

Table 4.6.8 STEADY STATE TEMPERATURE RESULTS UNDER POSTULATED 100% BLOCKAGE OF HI-TRAC VW VERSION V INLET VENTS	
Component	**Maximum Temperature ºC (ºF)**
Fuel Cladding	410 (771)
MPC Basket	394 (741)
Basket Periphery	320 (608)
Aluminum Basket Shims	293 (560)
MPC Shell	266 (510)
MPC Lid Note 1	254 (489)
HI-TRAC Inner Shell	128 (263)
HI-TRAC Top Flange	124 (256)
HI-TRAC Bottom Flange	118 (245)
HI-TRAC Radial Lead Gamma Shield	127 (261)
Water Jacket Shell	120 (247)
Water Bulk Temperature in Water Jacket	117 (243)
Note 1: Maximum section average temperature is reported.	

Table 4.6.9 ALLOWABLE TIME UNDER 100% BLOCKAGE OF HI-TRAC VW VERSION V AND V2 INLET VENTS	
Design Type	Duration, hours
HI-TRAC VW Version V2	16
HI-TRAC VW Version V	72

Table 4.6.10 TEMPERATURE RESULTS UNDER POSTULATED 100% BLOCKAGE OF HI-TRAC VW VERSION V2 INLET VENTS AFTER 16 HOURS	
Component	**Maximum Temperature ºC (ºF)**
Fuel Cladding	412 (773)
MPC Basket	397 (746)
Basket Periphery	327 (621)
Aluminum Basket Shims	313 (595)
MPC Shell	283 (541)
MPC Lid [Note1]	241 (466)
MPC Base Plate [Note1]	216 (421)
HI-TRAC V2 Inner Shell	203 (397)
HI-TRAC V2 Top Flange	135 (276)
HI-TRAC V2 Bottom Flange	176 (348)
HI-TRAC V2 Bottom Lid	215 (419)
HI-TRAC V2 Radial Lead Gamma Shield	202 (396)
NSC Inner Shell	163 (325)
NSC Top Flange	115 (239)
NSC Bottom Flange	112 (233)
NSC Outer Shell	115 (239)
NSC Holtite	161 (321)
Note 1: Maximum section average temperature is reported	

4.8 REFERENCES

[4.1.1] Deleted

[4.1.2] FLUENT Computational Fluid Dynamics Software, Fluent, Inc., Centerra Resource Park, 10 Cavendish Court, Lebanon, NH 03766.

[4.1.3] "The TN-24P PWR Spent-Fuel Storage Cask: Testing and Analyses," EPRI NP-5128, (April 1987).

[4.1.4] "Cladding Considerations for the Transportation and Storage of Spent Fuel," Interim Staff Guidance – 11, Revision 3, USNRC, Washington, DC.

[4.1.5] "Topical Report on the HI-STAR/HI-STORM Thermal Model and its Benchmarking with Full-Size Cask Test Data," Holtec Report HI-992252, Revision 1, Holtec International, Marlton, NJ, 08053.

[4.1.6] "Identifying the Appropriate Convection Correlation in FLUENT for Ventilation Air Flow in the HI-STORM System", Revision 1, Holtec Report HI-2043258, Holtec International, Marlton, NJ, 08053.

[4.1.7] "Performance Testing and Analyses of the VSC-17 Ventilated Concrete Cask", EPRI TR-100305, (May 1992).

[4.1.8] "Holtec International Final Safety Analysis Report for the HI-STORM 100 Cask System", Holtec Report No. 2002444, Revision 7, NRC Docket No. 72-1014.

[4.1.9] "Thermal Evaluation of HI-STORM FW", Holtec Report HI-2094400, Latest Revision.

[4.1.10] "Effective Thermal Properties of PWR Fuel in MPC-37", Holtec Report HI-2094356, Revision 5.

[4.1.11] "Safety Analysis Report on the HI-STAR 180 Package", Holtec Report HI-2073681, Latest Revision.

[4.1.12] "Effective Properties of PWR and BWR Fuel assemblies to Support Thermal Evaluations of HI-STORM FW", HI-2167474, Rev. 0.

[4.2.1] Baumeister, T., Avallone, E.A. and Baumeister III, T., "Marks' Standard Handbook for Mechanical Engineers," 8th Edition, McGraw Hill Book Company, (1978).

[4.2.2] Rohsenow, W.M. and Hartnett, J.P., "Handbook of Heat Transfer," McGraw Hill Book Company, New York, (1973).

2005-212792, December 2005.

[4.2.21] "Thermal Radiation Heat Transfer", Third Edition, Robert Siegel and John R. Howell.

[4.2.22] Holtite-A: Development History and Thermal Performance Data", Holtec Report No. HI-2002396, Latest Revision.

[4.4.1] NUREG-1536, "Standard Review Plan for Dry Cask Storage Systems," USNRC, (January 1997).

[4.4.2] "Pressure Loss Charactersistics for In-Cell Flow of Helium in PWR and BWR Storage Cells", Holtec Report HI-2043285, Revision 6, Holtec International, Marlton, NJ, 08053.

[4.4.3] "Standard for Verification and Validation in Computational Fluid Dynamics and Heat Transfer", ASME V&V 20-2009.

[4.5.1] "Procedure for Estimating and Reporting of Uncertainty due to Discretization in CFD Applications", I.B. Celik, U. Ghia, P.J. Roache and C.J. Freitas (Journal of Fluids Engineering Editorial Policy on the Control of Numerical Accuracy).

[4.6.1] United States Code of Federal Regulations, Title 10, Part 71.

[4.6.2] Gregory, J.J. et. al., "Thermal Measurements in a Series of Large Pool Fires", SAND85-1096, Sandia National Laboratories, (August 1987).

each device occupies the same location within a fuel assembly, a single PWR fuel assembly will not contain multiple devices, with the exception of instrument tube tie rods (ITTRs), which may be stored in the assembly along with other types of non-fuel hardware.

As described in Chapter 1(see Tables 1.2.3 and 1.2.4), the loading of fuel in all HI-STORM FW MPCs will follow specific heat load limitations.

In order to offer the user more flexibility in fuel storage, the HI-STORM FW System offers several heat load patterns, each with two or more regions with different heat load limits. This is taken into consideration when calculating dose rates in this chapter. The regionalized storage patterns are guided by the considerations of minimizing occupational and site boundary dose to comply with ALARA principles.

Two different lids have been developed for the HI-STORM FW concrete overpack. The lid included in the initial application, referred to as "standard lid", and a revised design with overall improved shielding performance, referred to as "XL lid". Since by now essentially all installations utilize the "XL lid", all dose rates provided for MPC-37 and MPC-89 in this chapter are for that lid design, with the only exception being some tables in Section 5.4 which contain selected results for the "standard lid" from previous versions of this chapter for reference. The shielding analysis of HI-STORM FW with MPC-32ML is performed using a "standard lid" design. All references to the "lid" are to be understood to refer to the "XL lid", unless otherwise noted.

The sections that follow will demonstrate that the design of the HI-STORM FW dry cask storage system fulfills the following acceptance criteria outlined in the Standard Review Plan, NUREG-1536 [5.2.1]:

Acceptance Criteria

1. The minimum distance from each spent fuel handling and storage facility to the controlled area boundary must be at least 100 meters. The "controlled area" is defined in 10CFR72.3 as the area immediately surrounding an ISFSI or monitored retrievable storage (MRS) facility, for which the licensee exercises authority regarding its use and within which ISFSI operations are performed.

2. The system designer must show that, during both normal operations and anticipated occurrences, the radiation shielding features of the proposed dry cask storage system are sufficient to meet the radiation dose requirements in Sections 72.104(a). Specifically, the vendor must demonstrate this capability for a typical array of casks in the most bounding site configuration. For example, the most bounding configuration might be located at the minimum distance (100 meters) to the controlled area boundary, without any shielding from other structures or topography.

3. Dose rates from the cask must be consistent with a well established "as low as reasonably achievable" (ALARA) program for activities in and around the storage site.

4. After a design-basis accident, an individual at the boundary or outside the controlled area shall not receive a dose greater than the limits specified in 10CFR72.106.

5. The proposed shielding features must ensure that the dry cask storage system meets the regulatory requirements for occupational and radiation dose limits for individual members of the public, as prescribed in 10CFR Part 20, Subparts C and D.

Consistent with the Standard Review Plan, NUREG-1536, this chapter contains the following information:

- A description of the shielding features of the HI-STORM FW system, including the HI-TRAC transfer cask.
- A description of the source terms.
- A general description of the shielding analysis methodology.
- A description of the analysis assumptions and results for the HI-STORM FW system, including the HI-TRAC transfer cask.
- Analyses are presented for each MPC showing that the radiation dose rates follow As-Low-As-Reasonably-Achievable (ALARA) practices.
- Analyses to show that the 10CFR72.106 controlled area boundary radiation dose limits are met during accident conditions of storage for non-effluent radiation from illustrative ISFSI configurations at a minimum distance of 100 meters.
- Since only dose rate values for representative cask arrays for normal conditions are presented in this chapter, compliance with the radiation and exposure objectives of 10CFR72.104 is not being evaluated herein but will be performed as part of the site specific evaluations.

Chapter 2 contains a detailed description of structures, systems, and components important to safety.

Chapter 7 contains a discussion on the release of radioactive materials from the HI-STORM FW system. Therefore, this chapter only calculates the dose from direct neutron and gamma radiation emanating from the HI-STORM FW system.

Chapter 11, Radiation Protection, contains the following information:

- A discussion of the estimated occupational exposures for the HI-STORM FW system, including the HI-TRAC transfer cask.
- A summary of the estimated radiation exposure to the public.

The safety analyses summarized in this chapter demonstrate that under accident conditions, acceptable margins to allowable limits exist under all design basis loading conditions. For normal and off-normal conditions, the analyses in this chapter simply provide a generic evaluation that demonstrates that the dose requirements as specified in 10CFR72.104 can be met under site specific conditions. Minor changes to the design parameters that inevitably occur during the product's life cycle which are treated within the purview of 10CFR72.48 and are ascertained to have an insignificant effect on the computed dose rates in this chapter may not prompt a formal reanalysis and revision of the results and associated data in the tables of this chapter unless the cumulative effect of all such unquantified changes cannot be deemed any more to be insignificant. For accident conditions, the dose limit as specified in 10CFR72.106 is 5 rem. The only accident which impacts dose rates is the loss of water in the water jacket for the HI-TRAC VW. For the purposes of determining if the changes to the HI-TRAC VW are insignificant, an insignificant loss of margin with reference to the 5 rem acceptance criteria is defined as the estimated reduction that is no more than one order of magnitude less than the available margin reported in the FSAR. For normal and off-normal conditions, site specific dose evaluations are required to demonstrate compliance with 10CFR72.104. Incorporating any minor changes into those site specific evaluations is only warranted if it would be expected, on a site specific basis, that those changes could result in a situation where the limits are no longer met and where therefore other compensatory measures are required, such as a change in the loading plan or the concrete density. Incorporating changes into the analyses in this chapter for normal and off-normal conditions will only be performed under extenuating circumstances, e.g. major changes to the shielding design or loading patterns, in order to provide an updated template for the site specific dose analyses.

To ensure rigorous configuration control, the information in the Licensing drawings in Section 1.5 should be treated as the authoritative source for numerical analysis at all times. Reliance on the input data and associated results in this chapter for additional mathematical computations may not be appropriate as they serve the sole purpose of establishing safety compliance in accordance with the acceptance criteria set down in Chapter 2 and in this chapter.

5.1 DISCUSSION AND RESULTS

The principal sources of radiation in the HI-STORM FW system are:

- Gamma radiation originating from the following sources:

    1. Decay of radioactive fission products
    2. Secondary photons from neutron capture in fissile and non-fissile nuclides
    3. Hardware activation products generated during core operations

- Neutron radiation originating from the following sources

    1. Spontaneous fission
    2. α,n reactions in fuel materials
    3. Secondary neutrons produced by fission from subcritical multiplication
    4. γ,n reactions (this source is negligible)

During loading, unloading, and transfer operations, shielding from gamma radiation is provided by the stainless steel structure and the basket of the MPC and the steel, lead, and water in the HI-TRAC transfer cask. For storage, the gamma shielding is provided by the MPC, and the steel and concrete ("Metcon" structure) of the overpack. Shielding from neutron radiation is provided by the concrete of the overpack during storage and by the water of the HI-TRAC transfer cask during loading, unloading, and transfer operations. It is worth noting that the models, used to evaluate the dose calculations in this chapter, are constructed with minimum concrete densities and minimum lead thicknesses.

The shielding analyses were performed with MCNP5 [5.1.1] developed by Los Alamos National Laboratory (LANL). The source terms for the design basis fuels were calculated with the TRITON and ORIGAMI sequences from the SCALE 6.2.1 system [5.1.4]. Additional calculations in Section 5.4 were performed with the SAS2H and ORIGEN-S sequences of the SCALE 5 system [5.1.2, 5.1.3]. A detailed description of the MCNP models and the source term calculations are presented in Sections 5.3 and 5.2, respectively.

The design basis zircaloy clad fuel assemblies used for calculating the dose rates presented in this chapter are Westinghouse (W) 17x17 and the General Electric (GE) 10x10, for PWR (in MPC-37) and BWR fuel types, respectively. 16x16D is the design basis fuel assembly for PWR in MPC-32ML. Required site specific shielding evaluations will verify whether those assemblies and assembly parameters are appropriate for the site-specific analyses. Subsection 2.1 specifies the acceptable fuel characteristics, including the acceptable maximum burnup levels and minimum cooling times for storage of fuel in the HI-STORM FW MPCs.

The following presents a discussion that explains the rationale behind the burnup and cooling time combinations that are evaluated in this chapter for normal and accident conditions.

10CFR72 contains two sections that set down main dose rate requirements: §104 for normal and off-normal conditions, and §106 for accident conditions. The relationship of these requirements to the analyses in this Chapter 5, and the burnup and cooling times selected for the various analyses, are as follows:

- 10CFR72.104 specifies the dose limits from an ISFSI (and other operations) at a site boundary under normal and off-normal conditions. Compliance with §104 can therefore only be demonstrated on a site-specific basis, since it depends not only on the design of the cask system and the loaded fuel, but also on the ISFSI layout, the distance to the site boundary, and possibly other factors such as use of higher density concrete or the terrain around the ISFSI. The purpose of this chapter is therefore to present a general overview over the expected or maximum dose rates, next to the casks and at various distances, to aid the user in applying ALARA considerations and planning of the ISFSI.
- For the accident dose limit in 10CFR72.106 it is desirable to show compliance in this Chapter 5 on a generic basis, so that calculations on a site-by-site basis are not required[†]. To that extent, a burnup and cooling time calculation that maximizes the dose rate under accident conditions needs to be selected.

It is recognized that for a given heat load, an infinite number of burnup and cooling time combination could be selected, which would result in slightly different dose rate distributions around the cask. For a high burnup with a corresponding longer cooling time, dose locations with a high neutron contribution would show higher dose values, due to the non-linear relationship between burnup and neutron source term. At other locations dose rates are more dominated by contribution from the gamma sources. In these cases, short cooling time and lower burnup combinations with heat load comparable to the higher burnup and corresponding longer cooling time combinations would result in higher dose rates. However, in those cases, there would always be a compensatory effect, since for each dose location, higher neutron dose rates would be partly offset by lower gamma dose rates and vice versa. This is further complicated by the regionalized loading patterns qualified from a thermal perspective and shown in Figure 1.2.3 through Figure 1.2.5 for MPC-37 and Figures 1.2.6 and 1.2.7 for MPC-89. These contain cells with substantially different heat load limits, and hence substantially different ranges of burnup, enrichment and cooling time combinations. The approach to cover all those variations in a conservative way is outlined below.

To prescribe radiological limits for the fuel to be loaded, loading curves are defined in Tables 2.1.9 and 2.1.10, where a loading curve specifies the minimum cooling time as a function of fuel burnup. Different loading curves are defined for the different heat load limits, so that the thermal and radiological requirements for the fuel in each cell are approximately aligned. However, it should be noted that thermal and radiological limits for each assembly are applied completely independent from each other. The uniform and regionalized loading curves for the fuel to be loaded in the MPC-37, MPC-32ML or MPC-89 canisters are discussed in Subsection 5.2.7.

[†] As it is discussed in Subsection 5.1.2, a site-specific shielding evaluation may be required for accident-condition of MPC-32ML.

To determine dose rates consistent with both the uniform and regionalized thermal loading, it is necessary to consider the ranges of burnup and cooling times from all loading curves. For that, 8 burnup values between 5 and 70 GWd/mtU are selected, and corresponding minimum required cooling times are established and used in the dose analyzes. The heat load patterns in Figures 1.2.3 through 1.2.7 contain from 5 to 20 regions each, i.e. from 5 to 20 principal locations with different heat load limit. Applying 8 burnup and cooling time combinations to each location would result up to 8^{20} = 1.15E+18 different burnup and cooling time loading arrangements per pattern. Analyzing and comparing those many arrangements would be excessive. Therefore, for the radiological evaluations, some regions and loading patterns (MPC-37) are combined using the highest heat load limit (source term) of each group. For MPC-37, the heat loads for each cell are based on the "Long" fuel heat loads in Figure 1.2.5a. The established bounding heat load limits are provided in Tables 5.0.3 and 5.0.4.

This then results in effectively only 2 or 5 regions to be independently varied for the considered bounding MPC-37 and MPC-89 patterns, and hence 8^2 = 64 or 8^5 = 32,768 different burnup and cooling time arrangements per pattern is to be analyzed, which is manageable. The selected burnup, enrichment and cooling time combinations for the uniform and regionalized loading patterns are listed in Tables 5.0.3, 5.0.4a, 5.0.4b and 5.0.5. The dose rates in the various important locations are calculated for each of these combination arrangements and the maximum is determined for each dose rate location. It should be noted that this maximum can be from a different loading arrangement in different locations.

Based on this approach, the source terms used in the analyses of MPC-37, MPC-32ML or MPC-89 are reasonably bounding for all realistically expected assemblies. All dose rates in this chapter are developed using this approach, unless noted otherwise. Also, as discussed in Section 5.2, the design basis BPRA activities are considered for MPC-37 and MPC-32ML in this chapter, unless noted otherwise.

All dose rates in Section 5.1 are developed using the approach discussed above. Some dose rates in Section 5.4 were retained from previous versions of the FSAR and that are based on a representative (while still conservative) uniform loading pattern, as discussed in that Section.

Table 5.0.1

Table Deleted

Table 5.0.2

DESIGN BASIS FUEL BURNUP, COOLING TIME AND ENRICHMENT FOR ACCIDENT CONDITIONS

Design Basis Burnup and Cooling Times Zircaloy Clad Fuel
MPC-32ML
62,500 MWD/MTU 8 Year Cooling 4.6 wt% U-235 Enrichment

Table 5.0.3

SELECTED BURNUP, ENRICHMENT, COOLING TIME COMBINATIONS FOR THE MPC-37 LOADING PATTERNS BASED ON FIGURES 1.2.3 THROUGH 1.2.5 AND TABLE 2.1.10

Region	Burnup (MWd/mtU)	Enrichment (wt% ^{235}U)	Cooling Time (years)	Reference Decay Heat (kW)
High Heat Load Basket Regions	5000	1.1	1.0	3.5
	10000	1.1	1.0	
	20000	1.6	1.0	
	30000	2.4	1.4	
	40000	3.0	1.6	
	50000	3.6	2.0	
	60000	3.9	2.2	
	70000	4.5	2.8	
Low Heat Load Basket Regions	5000	1.1	1.4	0.85
	10000	1.1	2.0	
	20000	1.6	3.0	
	30000	2.4	4.0	
	40000	3.0	6.0	
	50000	3.6	10.0	
	60000	3.9	18.0	
	70000	4.5	29.0	

NOTE:

To simplify the dose analyses in Chapter 5 that show bounding conditions, for some cells, burnup and cooling time combinations are selected for the dose analyses that may correspond to a higher decay heat than is permitted for that cell. The decay heat limits and burnup/cooling time limits remain independent of each other, so this does not impact the decay heat limit for a cell. The cell decay heat limits are given in Figures 1.2.3 through 1.2.5.

Table 5.0.4a

SELECTED BURNUP, ENRICHMENT, COOLING TIME COMBINATIONS FOR THE MPC-89 LOADING PATTERNS BASED ON FIGURE 1.2.6 AND TABLE 2.1.10

Region	Burnup (MWd/mtU)	Enrichment (wt% ^{235}U)	Cooling Time (years)	Reference Decay Heat (kW)
High Heat Load Basket Regions	5000	0.7	1.0	1.45
	10000	0.9	1.0	
	20000	1.6	1.0	
	30000	2.4	1.0	
	40000	3.0	1.2	
	50000	3.3	1.6	
	60000	3.7	1.8	
	70000	4.0	2.4	
Low Heat Load Basket Regions	5000	0.7	1.4	0.32
	10000	0.9	2.0	
	20000	1.6	3.0	
	30000	2.4	4.0	
	40000	3.0	6.0	
	50000	3.3	10.0	
	60000	3.7	18.0	
	70000	4.0	29.0	

NOTE:

To simplify the dose analyses in Chapter 5 that show bounding conditions, for some cells, burnup and cooling time combinations are selected for the dose analyses that may correspond to a higher decay heat than is permitted for that cell. The decay heat limits and burnup/cooling time limits remain independent of each other, so this does not impact the decay heat limit for a cell. The cell decay heat limits are given in Figures 1.2.6.

Table 5.0.4b

SELECTED BURNUP, ENRICHMENT, COOLING TIME COMBINATIONS FOR THE MPC-89 LOADING PATTERNS BASED ON FIGURE 1.2.7 AND TABLE 2.1.10

Region	Burnup (MWd/mtU)	Enrichment (wt% ^{235}U)	Cooling Time (years)	Reference Decay Heat (kW)
High Heat Load Basket Regions (Region 1)	5000	0.7	1.0	1.6
	10000	0.9	1.0	
	20000	1.6	1.0	
	30000	2.4	1.0	
	40000	3.0	1.0	
	50000	3.3	1.4	
	60000	3.7	1.6	
	70000	4.0	1.8	
High Heat Load Basket Regions (Region 2)	5000	0.7	1.0	1.1
	10000	0.9	1.0	
	20000	1.6	1.0	
	30000	2.4	1.4	
	40000	3.0	1.6	
	50000	3.3	2.2	
	60000	3.7	2.6	
	70000	4.0	2.8	
Low Heat Load Basket Regions (Region 3)	5000	0.7	1.0	0.75
	10000	0.9	1.0	
	20000	1.6	1.4	
	30000	2.4	2.0	
	40000	3.0	2.4	
	50000	3.3	3.0	
	60000	3.7	3.5	
	70000	4.0	5.0	

Table 5.0.4b (continued)

SELECTED BURNUP, ENRICHMENT, COOLING TIME COMBINATIONS FOR THE MPC-89 LOADING PATTERNS BASED ON FIGURE 1.2.7 AND TABLE 2.1.10

Region	Burnup (MWd/mtU)	Enrichment (wt% ^{235}U)	Cooling Time (years)	Reference Decay Heat (kW)
Low Heat Load Basket Regions (Region 4)	5000	0.7	1.0	0.5
	10000	0.9	1.4	
	20000	1.6	2.2	
	30000	2.4	2.8	
	40000	3.0	3.5	
	50000	3.3	5.0	
	60000	3.7	7.0	
	70000	4.0	9.0	
Low Heat Load Basket Regions (Region 5)	5000	0.7	1.4	0.32
	10000	0.9	2.0	
	20000	1.6	3.0	
	30000	2.4	4.0	
	40000	3.0	6.0	
	50000	3.3	10.0	
	60000	3.7	18.0	
	70000	4.0	29.0	

NOTE:

To simplify the dose analyses in Chapter 5 that show bounding conditions, for some cells, burnup and cooling time combinations are selected for the dose analyses that may correspond to a higher decay heat than is permitted for that cell. The decay heat limits and burnup/cooling time limits remain independent of each other, so this does not impact the decay heat limit for a cell. The cell decay heat limits are given in Figures 1.2.7.

Table 5.0.5

SELECTED BURNUP, ENRICHMENT, COOLING TIME COMBINATIONS FOR MPC-32ML LOADING PATTERNS FOR NORMAL CONDITIONS

Burnup (MWD/MTU)	**Initial U-235 Enrichment (wt%)**	**Cooling Time (years)**	
		Calculated Using Combination Curve in Table 2.1.9	**Used in Shielding Analysis**
15000	1.1	3.42	3
20000	1.1	3.49	3
25000	1.6	3.59	3.5
30000	2	3.76	3.6
35000	2.4	4.04	4
40000	2.6	4.50	4.5
45000	3	5.18	5
50000	3.3	6.14	6
55000	3.6	7.42	7
60000	3.6	9.07	9
65000	3.9	11.15	11
70000	4.2	13.70	13

5.1.1 Normal and Off-Normal Operations

Chapter 12 discusses the potential off-normal conditions and their effect on the HI-STORM FW system. None of the off-normal conditions have any impact on the shielding analysis. Therefore, off-normal and normal conditions are identical for the purpose of the shielding evaluation.

The 10CFR72.104 criteria for radioactive materials in effluents and direct radiation during normal operations are:

1. During normal operations and anticipated occurrences, the annual dose equivalent to any real individual who is located beyond the controlled area, must not exceed 25 mrem to the whole body, 75 mrem to the thyroid and 25 mrem to any other critical organ.

2. Operational restrictions must be established to meet as low as reasonably achievable (ALARA) objectives for radioactive materials in effluents and direct radiation.

10CFR20 Subparts C and D specify additional requirements for occupational dose limits and radiation dose limits for individual members of the public. Chapter 11 specifically addresses these regulations.

In accordance with ALARA practices, design objective dose rates are established for the HI-STORM FW system and presented in Table 2.3.2.

Figure 5.1.1 identifies the locations of the dose points referenced in the dose rate summary tables for the HI-STORM FW overpack. Dose Point #2 is located on the side of the cask at the axial mid-height. Dose Points #1 and #3 are the locations of the inlet and outlet air ducts, respectively. The dose values reported for these locations (adjacent and 1 meter) were averaged over the duct opening. Dose Point #4 is the dose location on the overpack lid. The dose values reported at the locations shown on Figure 5.1.1 are averaged over a region that is approximately 1 foot in width.

Figure 5.1.2 identifies the location of the dose points for the HI-TRAC VW transfer cask. Dose Point Locations #1 and #3 are situated below and above the water jacket, respectively. In the case of the HI-TRAC VW Version V2, Dose Point Locations #1 and #3 are situated below and above the neutron shield, respectively. Dose Point #4 is the dose location on the HI-TRAC VW lid and dose rates below the HI-TRAC VW are estimated with Dose Point #5. Dose Point Location #2 is situated on the side of the cask at the axial mid-height.

The total dose rates presented are presented for two cases: with and without BPRAs. The dose from the BPRAs was conservatively assumed to be the maximum calculated in Subsection 5.4.4.

Tables 5.1.1, 5.1.2 and 5.1.13 provide dose rates adjacent to and one meter from the HI-TRAC VW during normal conditions for the MPC-37, MPC-89 and MPC-32ML. The dose rates listed in Tables 5.1.1, 5.1.2 and 5.1.13 correspond to the normal condition in which the MPC is dry and the HI-TRAC water jacket is filled with water. It should be noted that the minimum lead thickness of HI-TRAC VW with MPC-32ML is more than that of HI-TRAC with MPC-37.

Tables 5.1.10 provides dose rates adjacent to and one meter from the HI-TRAC VW Version V2 during normal conditions for the MPC-89. The dose rates listed in Table 5.1.10 correspond to the normal condition in which the MPC is dry and the Gamma Shield Cylinder and Neutron Shield Cylinder are present.

Tables 5.1.5, 5.1.6 and 5.1.11 provide the design basis dose rates adjacent to the HI-STORM FW overpack during normal conditions for the MPC-37, MPC-89 and MPC-32ML. Tables 5.1.7, 5.1.8 and 5.1.12 provide the design basis dose rates at one meter from the HI-STORM FW overpack containing the MPC-37, MPC-89 and MPC-32ML, respectively.

The dose to any real individual at or beyond the controlled area boundary is required to be below 25 mrem per year. The minimum distance to the controlled area boundary is 100 meters from the ISFSI. Table 5.1.3 presents the annual dose to an individual from a single HI-STORM FW cask and various storage cask arrays, assuming an 8760 hour annual occupancy at the dose point location. The minimum distance required for the corresponding dose is also listed. It is noted that these data are provided for illustrative purposes only. A detailed site-specific evaluation of dose at the controlled area boundary must be performed for each ISFSI in accordance with 10CFR72.212. The site-specific evaluation will consider dose from other portions of the facility and will consider the actual conditions of the fuel being stored (burnup and cooling time).

Figure 5.1.3 is an annual dose versus distance graph for the HI-STORM FW cask array configurations provided in Table 5.1.3. Figure 5.1.4 is an annual dose versus distance graph for the HI-STORM FW cask array configurations provided in Table 5.4.21. These curves, which are based on an 8760 hour occupancy, are provided for illustrative purposes only and will be re-evaluated on a site-specific basis.

Subsection 5.2.3 discusses the BPRAs, TPDs, CRAs and APSRs that are permitted for storage in the HI-STORM FW system. Subsection 5.4.4 discusses the increase in dose rate as a result of adding non-fuel hardware in the MPCs.

The analyses summarized in this section demonstrate that the HI-STORM FW system is in compliance with the radiation and exposure objectives of 10CFR72.106. Since only representative dose rate values for normal conditions are presented in this chapter, compliance with 10CFR72.104 is not being evaluated. This will be performed as part of the site specific evaluations.

5.1.2 Accident Conditions

The 10CFR72.106 radiation dose limits at the controlled area boundary for design basis accidents are:

> Any individual located on or beyond the nearest boundary of the controlled area may not receive from any design basis accident the more limiting of a total effective dose

equivalent of 5 Rem, or the sum of the deep-dose equivalent and the committed dose equivalent to any individual organ or tissue (other than the lens of the eye) of 50 Rem. The lens dose equivalent shall not exceed 15 Rem and the shallow dose equivalent to skin or to any extremity shall not exceed 50 Rem. The minimum distance from the spent fuel or high-level radioactive waste handling and storage facilities to the nearest boundary of the controlled area shall be at least 100 meters.

Structural evaluations, presented in Chapter 3, shows that a freestanding HI-STORM FW storage overpack containing a loaded MPC remains standing during events that could potentially lead to a tip-over event. Therefore, the tip-over accident is not considered as part of the shielding evaluation.

Design basis accidents which may affect the HI-STORM FW overpack can result in limited and localized damage to the outer shell and radial concrete shield. As the damage is localized and the vast majority of the shielding material remains intact, the effect on the dose at the site boundary is negligible. Therefore, the site boundary doses for the loaded HI-STORM FW overpack for accident conditions are equivalent to the normal condition doses, which meet the 10CFR72.106 radiation dose limits. However the adjacent and one meter dose rates may be increased, which should be considered in any post-accident activities near the affected cask.

The design basis accidents analyzed in Chapter 11 have one bounding consequence that affects the shielding materials of the HI-TRAC transfer cask. It is the potential for damage to the water jacket shell and the loss of the neutron shield (water). In the accident consequence analysis, it is conservatively assumed that the neutron shield (water) is completely lost and replaced by a void.

Throughout all design basis accident conditions the axial location of the fuel will remain fixed within the MPC because of the MPC's design features (see Chapter 1). Further, the structural evaluation of the HI-TRAC VW in Chapter 3 shows that the inner shell, lead, and outer shell remain intact throughout all design basis accident conditions. Localized damage of the HI-TRAC outer shell is possible; however, localized deformations will have only a negligible impact on the dose rate at the boundary of the controlled area.

The complete loss of the HI-TRAC neutron shield significantly affects the dose at mid-height (Dose Point #2) adjacent to the HI-TRAC. Loss of the neutron shield has a small effect on the dose at the other dose points. To illustrate the impact of the design basis accident, the dose rates at Dose Point #2 (see Figure 5.1.2) are provided in Table 5.1.4a with MPC-37 and Tables 5.1.4b and 5.1.4c with MPC-89 for the HI-TRAC VW at a distance of 1 meter and at a distance of 100 meters. The normal condition dose rates are provided for reference. The dose for a period of 30 days is shown in Table 5.1.9, where 30 days is used to illustrate the radiological impact for a design basis accident. Based on this dose rate and the short duration of use for the loaded HI-TRAC transfer cask, it is evident that the dose as a result of the design basis accident cannot exceed 5 rem at the controlled area boundary for the short duration of the accident.

The HI-TRAC VW Version V2 shielding accident case where potentially the Holtite-A is lost from fire is bounded by the standard HI-TRAC VW for accident cases since the total radial

through thickness of steel and lead is slightly more for the HI-TRAC VW Version V2 than the standard HI-TRAC VW.

Analyses summarized in this section demonstrate that the HI-STORM FW system, including the HI-TRAC VW transfer cask, is in compliance with the 10CFR72.106 limits. It should be noted that, as a defense in depth, site-specific shielding evaluation shall be performed if there is any fuel to be loaded into MPC-32ML with a burnup more than the design basis accident-condition burnup for MPC-32ML in Table 5.0.2.

Table 5.1.1

MAXIMUM DOSE RATES FROM THE HI-TRAC VW FOR NORMAL CONDITIONS
MPC-37 DESIGN BASIS FUEL
REGIONALIZED LOADING BASED ON FIGURES 1.2.3 THROUGH 1.2.5

Dose Point Location	Fuel Gammas (mrem/hr)	(n,γ) Gammas (mrem/hr)	^{60}Co Gammas (mrem/hr)	Neutrons (mrem/hr)	Totals (mrem/hr)	Totals with BPRAs (mrem/hr)
ADJACENT TO THE HI-TRAC VW						
1	1137.9	17.2	755.5	46.2	1956.9	2333.2
2	3577.0	3.4	0.1	6.7	3587.3	4736.8
3	41.2	4.8	351.2	5.4	402.7	860.8
4	134.0	1.4	481.3	249.2	865.9	1604.3
5	710.0	2.9	1781.0	1122.0	3615.9	3897.4
ONE METER FROM THE HI-TRAC VW						
1	851.3	0.6	71.8	1.5	925.2	1163.1
2	1875.0	1.1	6.9	2.8	1885.8	2399.6
3	222.2	1.6	115.9	2.5	342.1	557.8
4	91.3	0.5	295.9	79.3	467.1	878.5
5	668.9	0.8	1145.1	269.0	2083.8	2257.4

Notes:

- Refer to Figure 5.1.2 for dose locations.
- Dose rates are based on no water within the MPC, an empty annulus, and a water jacket full of water. For the majority of the duration that the HI-TRAC bottom lid is installed, the MPC cavity will be flooded with water. The water within the MPC greatly reduces the dose rate.
- Streaming may occur through the annulus. However, during handling/operations the annulus is filled with water and lead snakes are typically present to reduce the streaming effects. Further, operators are not present on top of the transfer cask.
- The "Fuel Gammas" category includes gammas from the spent fuel and ^{60}Co from the spacer grids.
- ^{60}Co activities from BPRA at 1 year cooling are used.

Table 5.1.2a

MAXIMUM DOSE RATES FROM THE HI-TRAC VW FOR NORMAL CONDITIONS
MPC-89 DESIGN BASIS FUEL
REGIONALIZED LOADING BASED ON FIGURE 1.2.6

Dose Point Location	Fuel Gammas (mrem/hr)	(n,γ) Gammas (mrem/hr)	^{60}Co Gammas (mrem/hr)	Neutrons (mrem/hr)	Totals (mrem/hr)
ADJACENT TO THE HI-TRAC VW					
1	424.1	24.4	2212.0	54.1	2714.6
2	4906.7	12.8	<0.1	24.7	4944.2
3	19.1	5.0	661.0	5.7	690.8
4	66.7	1.4	477.8	214.8	760.7
5	216.8	3.0	1922.8	1061.7	3204.3
ONE METER FROM THE HI-TRAC VW					
1	720.0	9.5	247.5	19.7	996.8
2	2218.5	3.6	16.7	8.3	2247.2
3	205.7	4.8	300.8	6.1	517.3
4	40.5	0.5	334.9	66.4	442.3
5	174.7	0.9	1355.9	314.0	1845.6

Notes:

- Refer to Figure 5.1.2 for dose locations.
- Dose rates are based on no water within the MPC, an empty annulus, and a water jacket full of water. For the majority of the duration that the HI-TRAC bottom lid is installed, the MPC cavity will be flooded with water. The water within the MPC greatly reduces the dose rate.
- Streaming may occur through the annulus. However, during handling/operations the annulus is filled with water and lead snakes are typically present to reduce the streaming effects. Further, operators are not present on top of the transfer cask.
- The "Fuel Gammas" category includes gammas from the spent fuel and ^{60}Co from the spacer grids.

Table 5.1.2b

MAXIMUM DOSE RATES FROM THE HI-TRAC VW FOR NORMAL CONDITIONS
MPC-89 DESIGN BASIS FUEL
REGIONALIZED LOADING BASED ON FIGURE 1.2.7

Dose Point Location	Fuel Gammas (mrem/hr)	(n,γ) Gammas (mrem/hr)	^{60}Co Gammas (mrem/hr)	Neutrons (mrem/hr)	Totals (mrem/hr)
ADJACENT TO THE HI-TRAC VW					
1	478.0	29.5	2419.7	66.1	2993.3
2	5754.5	50.5	<0.1	93.2	5898.2
3	23.0	5.6	716.8	6.3	751.6
4	48.2	2.6	434.7	403.0	888.4
5	166.3	5.7	1797.8	2093.5	4063.3
ONE METER FROM THE HI-TRAC VW					
1	855.9	12.8	259.4	26.7	1154.8
2	2629.5	4.9	17.8	11.4	2663.6
3	237.8	7.3	317.6	9.8	572.5
4	40.7	0.6	352.4	90.4	484.2
5	179.1	1.3	1425.8	431.8	2038.1

Notes:

- Refer to Figure 5.1.2 for dose locations.
- Dose rates are based on no water within the MPC, an empty annulus, and a water jacket full of water. For the majority of the duration that the HI-TRAC bottom lid is installed, the MPC cavity will be flooded with water. The water within the MPC greatly reduces the dose rate.
- Streaming may occur through the annulus. However, during handling/operations the annulus is filled with water and lead snakes are typically present to reduce the streaming effects. Further, operators are not present on top of the transfer cask.
- The "Fuel Gammas" category includes gammas from the spent fuel and ^{60}Co from the spacer grids.

Table 5.1.3

MAXIMUM DOSE RATES FOR ARRAYS OF HI-STORM FWs CONTAINING THE MPC-37 WITH REGIONALIZED LOADING
BASED ON FIGURES 1.2.3 THROUGH 1.2.5

Array Configuration	1 cask	2x2	2x3	2x4	2x5
HI-STORM FW Overpack					
Annual Dose (mrem/year)	9	23	12	16	20
Distance to Controlled Area Boundary (meters)	300	300	400	400	400

Notes:

- Values are rounded up to nearest integer.
- 8760 hour annual occupancy is assumed.
- Dose location is at the center of the long side of the array.
- The bounding regionalized loading source term, consistent with Table 5.1.7 for dose point location 2, is used.

Table 5.1.4a

MAXIMUM DOSE RATES FROM HI-TRAC VW WITH MPC-37
FOR ACCIDENT CONDITIONS AT REGIONALIZED LOADING BURNUP AND COOLING TIMES
BASED ON FIGURES 1.2.3 THROUGH 1.2.5

Dose Point Location	Fuel Gammas (mrem/hr)	N, Gamma (mrem/hr)	Co-60 Gamma (mrem/hr)	Neutrons (mrem/hr)	Totals with BPRAs (mrem/hr)
1 meter from HI-TRAC VW					
2 (Accident Condition)	2587.6	1.1	16.4	1073.7	4580.3
2 (Normal Condition)	1875.0	1.1	6.9	2.8	2399.6
100 meters from HI-TRAC VW					
2 (Accident Condition)	0.3	<0.1	<0.1	0.5	0.8

Notes:

- Refer to Figure 5.1.2 for dose locations.
- The "Fuel Gammas" category includes gammas from the spent fuel and ^{60}Co from the spacer grids.
- ^{60}Co activities from BPRA at 1 year cooling are used.

Table 5.1.4b

MAXIMUM DOSE RATES FROM HI-TRAC VW WITH MPC-89
FOR ACCIDENT CONDITIONS AT REGIONALIZED LOADING BURNUP AND COOLING TIMES
BASED ON FIGURE 1.2.6

Dose Point Location	Fuel Gammas (mrem/hr)	N, Gamma (mrem/hr)	Co-60 Gamma (mrem/hr)	Neutrons (mrem/hr)	Total (mrem/hr)
1 meter from HI-TRAC VW					
2 (Accident Condition)	3400.4	1.8	33.4	1617.4	5053.0
2 (Normal Condition)	2218.5	3.6	16.7	8.3	2247.2
100 meters from HI-TRAC VW					
2 (Accident Condition)	1.6	<0.1	0.2	0.8	2.7

Notes:

- Refer to Figure 5.1.2 for dose locations.
- The "Fuel Gammas" category includes gammas from the spent fuel and ^{60}Co from the spacer grids.

Table 5.1.4c

MAXIMUM DOSE RATES FROM HI-TRAC VW WITH MPC-89
FOR ACCIDENT CONDITIONS AT REGIONALIZED LOADING BURNUP AND COOLING TIMES
BASED ON FIGURE 1.2.7

Dose Point Location	Fuel Gammas (mrem/hr)	N, Gamma (mrem/hr)	Co-60 Gamma (mrem/hr)	Neutrons (mrem/hr)	Total (mrem/hr)
1 meter from HI-TRAC VW					
2 (Accident Condition)	3231.4	3.8	35.9	3440.3	6711.4
2 (Normal Condition)	2629.5	4.9	17.8	11.4	2663.6
100 meters from HI-TRAC VW					
2 (Accident Condition)	1.5	<0.1	0.2	1.7	3.5

Notes:

- Refer to Figure 5.1.2 for dose locations.
- The "Fuel Gammas" category includes gammas from the spent fuel and ^{60}Co from the spacer grids.

Table 5.1.5

MAXIMUM DOSE RATES ADJACENT TO HI-STORM FW OVERPACK
FOR NORMAL CONDITIONS
MPC-37
REGIONALIZED BURNUP AND COOLING TIME BASED ON FIGURES 1.2.3 THROUGH 1.2.5

Dose Point Location	**Fuel Gammas (mrem/hr)**	**(n,γ) Gammas (mrem/hr)**	**^{60}Co Gammas (mrem/hr)**	**Neutrons (mrem/hr)**	**Totals (mrem/hr)**	**Totals with BPRAs (mrem/hr)**
1	386.7	<0.1	10.8	0.2	397.8	474.7
2	252.0	<0.1	<0.1	<0.1	252.2	292.1
3 (surface)	17.0	0.3	15.6	3.7	36.6	60.4
3 (overpack edge)	9.4	0.1	8.6	1.1	19.2	31.9
4 (center)	0.6	3.2	1.0	2.8	7.7	11.2
4 (mid)	16.2	0.9	7.7	3.1	27.9	44.2
4 (outer)	0.8	<0.1	0.5	<0.1	1.3	2.1

Notes:

- Refer to Figure 5.1.1 for dose locations.
- Dose location 3 (surface) is at the surface of the outlet vent. Dose location 3 (overpack edge) is in front of the outlet vent, but located radially above the overpack outer diameter.
- Dose location 4 (center) is at the center of the top surface of the top lid. Dose location 4 (mid) is situated directly above the vertical section of the outlet vent. Dose location 4 (outer) is extended along the top plane of the top lid, located radially above the overpack outer diameter.
- The "Fuel Gammas" category includes gammas from the spent fuel and ^{60}Co from the spacer grids.
- ^{60}Co activities from BPRA at 1 year cooling are used.

Table 5.1.6a

MAXIMUM DOSE RATES ADJACENT TO HI-STORM FW OVERPACK
FOR NORMAL CONDITIONS
MPC-89
REGIONALIZED BURNUP AND COOLING TIME BASED ON FIGURE 1.2.6

Dose Point Location	**Fuel Gammas (mrem/hr)**	**(n,γ) Gammas (mrem/hr)**	**^{60}Co Gammas (mrem/hr)**	**Neutrons (mrem/hr)**	**Totals (mrem/hr)**
1	239.3	0.2	21.9	0.4	261.8
2	204.3	0.3	<0.1	0.2	204.8
3 (surface)	8.8	0.2	19.8	3.2	32.1
3 (overpack edge)	3.7	0.1	9.8	1.1	14.7
4 (center)	0.4	2.2	1.8	1.9	6.4
4 (mid)	10.0	0.9	13.6	3.0	27.4
4 (outer)	0.6	<0.1	2.0	<0.1	2.6

Notes:

- Refer to Figure 5.1.1 for dose locations.
- Dose location 3 (surface) is at the surface of the outlet vent. Dose location 3 (overpack edge) is in front of the outlet vent, but located radially above the overpack outer diameter.
- Dose location 4 (center) is at the center of the top surface of the top lid. Dose location 4 (mid) is situated directly above the vertical section of the outlet vent. Dose location 4 (outer) is extended along the top plane of the top lid, located radially above the overpack outer diameter.
- The "Fuel Gammas" category includes gammas from the spent fuel and ^{60}Co from the spacer grids.

Table 5.1.6b

MAXIMUM DOSE RATES ADJACENT TO HI-STORM FW OVERPACK
FOR NORMAL CONDITIONS
MPC-89
REGIONALIZED BURNUP AND COOLING TIME BASED ON FIGURE 1.2.7

Dose Point Location	**Fuel Gammas (mrem/hr)**	**(n,γ) Gammas (mrem/hr)**	**^{60}Co Gammas (mrem/hr)**	**Neutrons (mrem/hr)**	**Totals (mrem/hr)**
1	293.1	0.3	23.5	0.5	317.4
2	238.1	0.4	<0.1	0.3	238.8
3 (surface)	9.9	0.3	21.3	4.2	35.7
3 (overpack edge)	4.3	0.1	10.6	1.2	16.2
4 (center)	0.4	3.2	2.0	2.7	8.4
4 (mid)	10.3	1.7	13.7	5.8	31.5
4 (outer)	0.6	<0.1	2.1	<0.1	2.8

Notes:

- Refer to Figure 5.1.1 for dose locations.
- Dose location 3 (surface) is at the surface of the outlet vent. Dose location 3 (overpack edge) is in front of the outlet vent, but located radially above the overpack outer diameter.
- Dose location 4 (center) is at the center of the top surface of the top lid. Dose location 4 (mid) is situated directly above the vertical section of the outlet vent. Dose location 4 (outer) is extended along the top plane of the top lid, located radially above the overpack outer diameter.
- The "Fuel Gammas" category includes gammas from the spent fuel and ^{60}Co from the spacer grids.

Table 5.1.7

MAXIMUM DOSE RATES AT ONE METER FROM HI-STORM FW OVERPACK
FOR NORMAL CONDITIONS
MPC-37
REGIONALIZED BURNUP AND COOLING TIME
BASED ON FIGURES 1.2.3 THROUGH 1.2.5

Dose Point Location	**Fuel Gammas (mrem/hr)**	**(n,γ) Gammas (mrem/hr)**	**^{60}Co Gammas (mrem/hr)**	**Neutrons (mrem/hr)**	**Totals (mrem/hr)**	**Totals with BPRAs (mrem/hr)**
1	92.5	<0.1	2.3	<0.1	94.9	111.7
2	129.1	<0.1	0.5	<0.1	129.7	151.7
3	10.4	<0.1	2.3	<0.1	12.6	18.3
4 (center)	3.2	0.7	3.1	1.4	8.5	13.5

Notes:

- Refer to Figure 5.1.1 for dose locations.
- The "Fuel Gammas" category includes gammas from the spent fuel and ^{60}Co from the spacer grids.
- ^{60}Co activities from BPRA at 1 year cooling are used.

Table 5.1.8a

MAXIMUM DOSE RATES AT ONE METER FROM HI-STORM FW OVERPACK
FOR NORMAL CONDITIONS
MPC-89
REGIONALIZED BURNUP AND COOLING TIME BASED ON FIGURE 1.2.6

Dose Point Location	**Fuel Gammas (mrem/hr)**	**(n,γ) Gammas (mrem/hr)**	**^{60}Co Gammas (mrem/hr)**	**Neutrons (mrem/hr)**	**Totals (mrem/hr)**
1	68.6	<0.1	5.7	<0.1	74.5
2	106.8	0.1	0.7	<0.1	107.7
3	5.8	<0.1	3.3	<0.1	9.2
4 (center)	1.7	0.6	3.8	1.2	7.3

Notes:

- Refer to Figure 5.1.1 for dose locations.
- The "Fuel Gammas" category includes gammas from the spent fuel and ^{60}Co from the spacer girds.

Table 5.1.8b

MAXIMUM DOSE RATES AT ONE METER FROM HI-STORM FW OVERPACK
FOR NORMAL CONDITIONS
MPC-89
REGIONALIZED BURNUP AND COOLING TIME BASED ON FIGURE 1.2.7

Dose Point Location	**Fuel Gammas (mrem/hr)**	**(n,γ) Gammas (mrem/hr)**	**^{60}Co Gammas (mrem/hr)**	**Neutrons (mrem/hr)**	**Totals (mrem/hr)**
1	81.0	<0.1	6.1	0.1	87.3
2	126.3	0.2	0.8	0.1	127.4
3	6.6	<0.1	3.7	0.1	10.4
4 (center)	1.6	1.2	3.7	2.3	8.8

Notes:

- Refer to Figure 5.1.1 for dose locations.
- The "Fuel Gammas" category includes gammas from the spent fuel and ^{60}Co from the spacer girds.

Table 5.1.9

MAXIMUM DOSE FROM HI-TRAC VW
FOR ACCIDENT CONDITIONS
AT 100 METERS

Dose Point Location	**Dose Rate (rem/hr)**	**Accident Duration (days)**	**Total Dose (rem)**	**Regulatory Limit (rem)**	**Time to Reach Regulatory Limit (days)**
2 (Accident Condition)	3.5E-03	30	2.52	5	59

Notes:

- Refer to Figure 5.1.2 for dose locations.
- Values are rounded to nearest integer where appropriate.
- Dose rate used to evaluated "Total Dose (rem)" is the maximum from Tables 5.1.4a, 5.1.4b and 5.1.4c.
- Regulatory Limit is from 10CFR72.106.

Table 5.1.10

DOSE RATES FROM THE HI-TRAC VW VERSION V2 FOR NORMAL CONDITIONS, DRY MPC-89 WITH NEUTRON SHIELD CYLINDER PRESENT, BASED ON FIGURE 1.2.7

Dose Point Location	Fuel Gammas (mrem/hr)	(n,γ) Gammas (mrem/hr)	^{60}Co Gammas (mrem/hr)	Neutrons (mrem/hr)	Totals (mrem/hr)
ADJACENT TO THE HI-TRAC VW					
1	1020	2	5794	362	7178
1*	104	2	675	384	1164
2	1412	19	< 1	154	1585
3	4	2	144	137	286
4	134	3	515	427	1078
5	174	6	1799	2123	4102
ONE METER FROM THE HI-TRAC VW					
1	345	3	63	31	441
1*	339	3	52	30	425
2	653	6	4	51	715
3	35	1	54	11	100
4	140	1	490	103	734
5	186	1	1430	462	2080

Notes:

* Location 1* uses a steel shield ring pedestal for the Neutron Shield Cylinder, which may be present for ALARA purposes. The critical shielding dimensions of the optional steel shield ring pedestal are as follows: Outer Diameter is 8 feet; radial thickness is 2.5 inches; Axial bottom of shield ring is 3 inches below MPC baseplate bottom surface; top of shield ring is in contact with Neutron Shield Cylinder.

- Refer to Figure 5.1.2 for dose locations.
- Values are rounded to nearest integer.
- Dose rates are based on no water within the MPC, an empty annulus, and the Neutron Shield Cylinder present. For the majority of the duration that the HI-TRAC bottom lid is installed, the MPC cavity will be flooded with water. The water within the MPC greatly reduces the dose rate.
- Streaming may occur through the annulus. However, during handling/operations the annulus is filled with water and lead snakes are typically present to reduce the streaming effects.
- The "Fuel Gammas" category includes gammas from the spent fuel and ^{60}Co from the spacer grids.

Table 5.1.11

MAXIMUM DOSE RATES ADJACENT TO HI-STORM FW OVERPACK
FOR NORMAL CONDITIONS
MPC-32MLWITH 16X16D FUEL
LOADING PATTERNS (SEE TABLE 5.0.5)

Dose Point Location	**Fuel Gammas (mrem/hr)**	**(n,γ) Gammas (mrem/hr)**	**^{60}Co Gammas (mrem/hr)**	**Neutrons (mrem/hr)**	**Totals (mrem/hr)**	**Totals with BPRAs (mrem/hr)**
1	201	1	78	1	280	280
2	172	<1	<1	<1	173	173
3 (surface)	16	1	16	2	35	45
3 (overpack edge)	16	<1	37	<1	53	77
4 (center)	< 1	1	<1	<1	2	2
4 (mid)	4	<1	1	<1	5	6
4 (outer)	10	<1	20	<1	30	43

Notes:

- Refer to Figure 5.1.1 for dose locations.
- Values are rounded to nearest integer where appropriate.
- Dose location 3 (surface) is at the surface of the outlet vent. Dose location 3 (overpack edge) is in front of the outlet vent, but located radially above the overpack outer diameter.
- Dose location 4 (center) is at the center of the top surface of the top lid. Dose location 4 (mid) is situated directly above the vertical section of the outlet vent. Dose location 4 (outer) is extended along the top plane of the top lid, located radially above the overpack outer diameter.
- The "Fuel Gammas" category includes gammas from the spent fuel, ^{60}Co from the spacer grids, and ^{60}Co from the BPRAs in the active fuel region.
- ^{60}Co activities from BPRA at 3 year cooling are used.

Table 5.1.12

MAXIMUM DOSE RATES AT ONE METER FROM HI-STORM FW OVERPACK
FOR NORMAL CONDITIONS
MPC-32MLWITH 16X16D FUEL
LOADING PATTERNS (SEE TABLE 5.0.5)

Dose Point Location	**Fuel Gammas (mrem/hr)**	**(n,γ) Gammas (mrem/hr)**	**^{60}Co Gammas (mrem/hr)**	**Neutrons (mrem/hr)**	**Totals (mrem/hr)**	**Totals with BPRAs (mrem/hr)**
1	52	<1	15	<1	66	67
2	91	<1	1	<1	92	93
3	8	<1	7	<1	16	20
4 (center)	1	<1	1	<1	2	2

Notes:

- Refer to Figure 5.1.1 for dose locations.
- Values are rounded to nearest integer where appropriate.
- The "Fuel Gammas" category includes gammas from the spent fuel, ^{60}Co from the spacer grids, and ^{60}Co from the BPRAs in the active fuel region.
- ^{60}Co activities from BPRA at 3 year cooling are used.

Table 5.1.13

MAXIMUM DOSE RATES FROM THE HI-TRAC VW FOR NORMAL CONDITIONS
MPC-32MLWITH 16X16D FUEL
LOADING PATTERNS (SEE TABLE 5.0.5)

Dose Point Location	Fuel Gammas (mrem/hr)	(n,γ) Gammas (mrem/hr)	^{60}Co Gammas (mrem/hr)	Neutrons (mrem/hr)	Totals (mrem/hr)	Totals with BPRAs (mrem/hr)
ADJACENT TO THE HI-TRAC VW						
1	5	4	41	86	136	136
2	1627	14	<1	25	1666	1666
3	67	3	329	3	402	606
4	74	1	364	156	595	858
5	318	1	1887	527	2734	2734
ONE METER FROM THE HI-TRAC VW						
1	190	4	154	8	356	356
2	723	5	7	10	745	746
3	95	1	63	1	160	198
4	236	<1	229	25	490	634
5	168	<1	1028	133	1329	1329

Notes:

- Refer to Figure 5.1.2 for dose locations.
- Values are rounded to nearest integer.
- Dose rates are based on no water within the MPC, an empty annulus, and a water jacket full of water. For the majority of the duration that the HI-TRAC bottom lid is installed, the MPC cavity will be flooded with water. The water within the MPC greatly reduces the dose rate.
- Streaming may occur through the annulus. However, during handling/operations the annulus is filled with water and lead snakes are typically present to reduce the streaming effects. Further, operators are not present on top of the transfer cask.
- The "Fuel Gammas" category includes gammas from the spent fuel, ^{60}Co from the spacer grids, and ^{60}Co from the BPRAs in the active fuel region.
- ^{60}Co activities from BPRA at 3 year cooling are used.

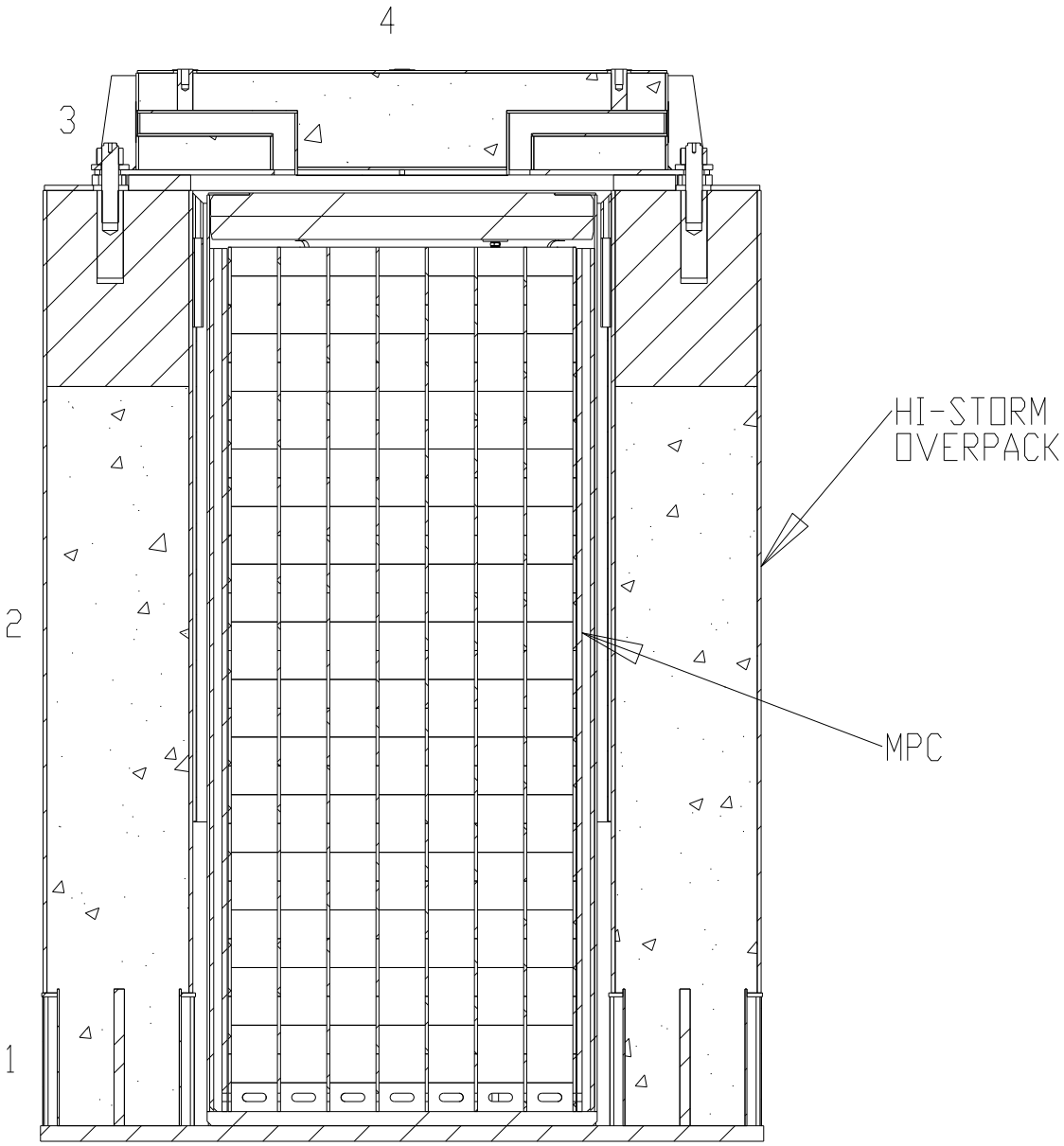

Figure 5.1.1

CROSS SECTION ELEVATION VIEW OF HI-STORM FW OVERPACK WITH DOSE POINT LOCATIONS
(Standard Lid is Shown)

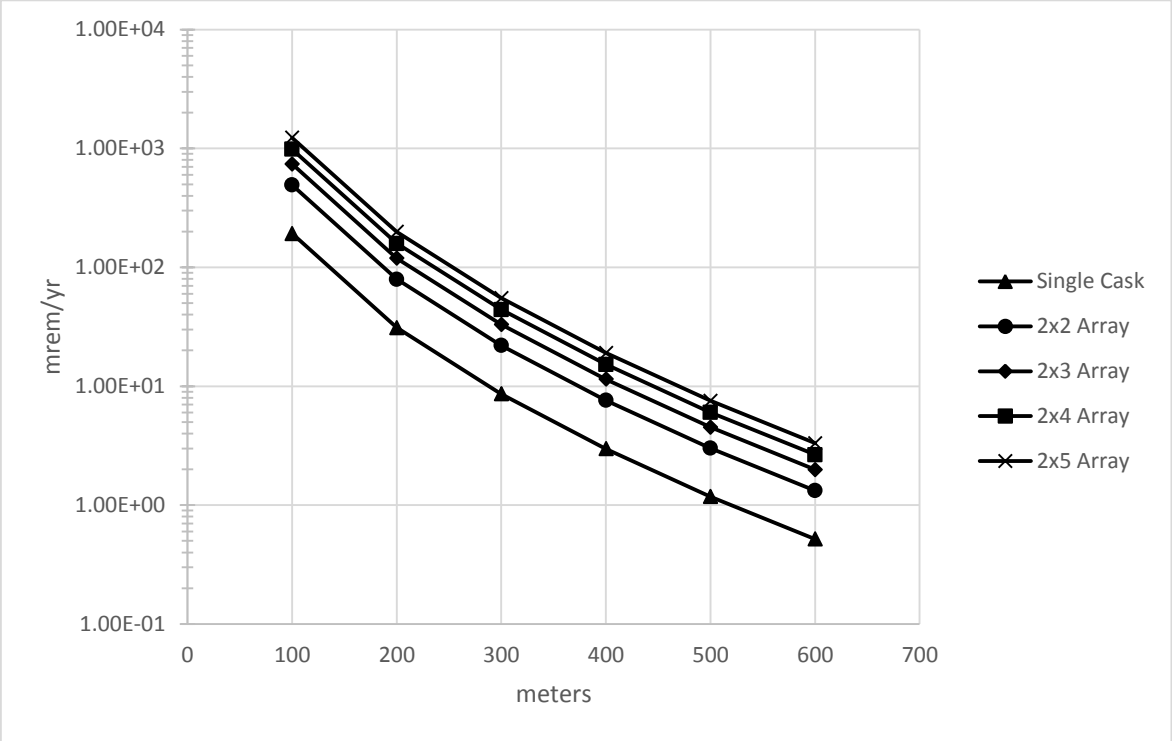

Figure 5.1.3

ANNUAL DOSE VERSUS DISTANCE FOR VARIOUS CONFIGURATIONS OF THE MPC-37 FOR REGIONALIZED LOADING BASED ON FIGURES 1.2.3 THROUGH 1.2.5 (8760 HOUR OCCUPANCY ASSUMED)

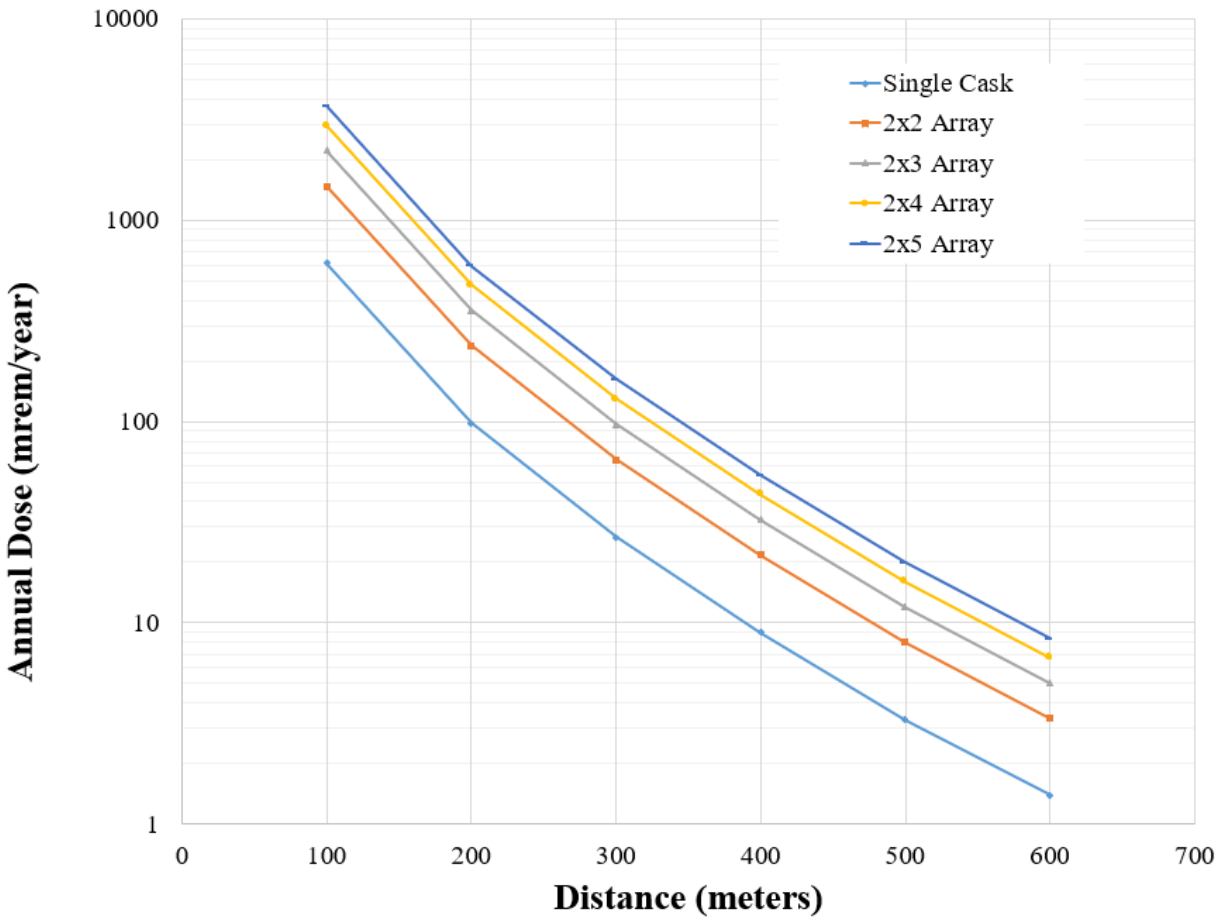

Figure 5.1.4

MAXIMUM ANNUAL DOSE VERSUS DISTANCE FOR VARIOUS CONFIGURATIONS OF THE MPC-32ML FOR BOUNDING UNIFORM PATTERNS (SEE TABLE 5.0.5) (8760-HOUR OCCUPANCY ASSUMED)

5.2 SOURCE SPECIFICATION

The design basis neutron and gamma source terms, decay heat values, and quantities of radionuclides available for release were calculated with the TRITON and ORIGAMI sequences of the SCALE 6.2.1 system [5.1.4], which is consistent with other approved Holtec applications [5.2.18]. For some additional calculations presented in Section 5.4, the neutron and gamma source terms available were calculated with the SAS2H and ORIGEN-S modules of the SCALE 5 system [5.1.2, 5.1.3]. SAS2H has been extensively compared to experimental isotopic validations and decay heat measurements. References [5.2.8] through [5.2.12] and [5.2.15] present isotopic comparisons for PWR and BWR fuels for burnups ranging to 47 GWD/MTU and reference [5.2.13] presents results for BWR measurements to a burnup of 57 GWD/MTU. A comparison of calculated and measured decays heats is presented in reference [5.2.14]. All of these studies indicate good agreement between SAS2H and measured data.

Sample input files for TRITON, ORIGAMI, SAS2H, and ORIGEN-S are provided in Appendix 5.A. The gamma source term is actually comprised of three distinct sources. The first is a gamma source term from the active fuel region due to decay of fission products. The second source term is from ^{60}Co activity of the stainless steel structural material in the fuel element above and below the active fuel region. The third source is from (n,γ) reactions described below.

A description of the design basis fuel in MPC-37 and MPC-89 for the source term calculations is provided in Table 5.2.1, and in Table 5.2.18 for design basis fuel in MPC-32ML. Subsection 5.2.5 discusses, in detail, the determination of the design basis fuel assemblies.

In performing the TRITON, ORIGAMI, SAS2H, and ORIGEN-S calculations, a single full power cycle was used to achieve the desired burnup. This assumption, in conjunction with the above-average specific powers listed in Tables 5.2.1 and 5.2.18 resulted in conservative source term calculations.

5.2.1 Gamma Source

Tables 5.2.2 through 5.2.5, and Tables 5.2.19 and 5.2.20 provide the gamma source in MeV/s and photons/s as calculated with TRITON and ORIGAMI for the design basis zircaloy clad fuel at the burnups and cooling times used for normal and accident conditions.

Previous analyses were performed for the HI-STORM 100 system to determine the dose contribution from gammas as a function of energy [5.2.17]. The results of these analyses have revealed that, due to the magnitude of the gamma source at lower energies, photons with energies as low as 0.45 MeV must be included in the shielding analysis, but photons with energies below 0.45 MeV are too weak to penetrate the HI-STORM overpack or HI-TRAC. The effect of gammas with energies above 3.0 MeV, on the other hand, was found to be insignificant. This is due to the fact that the source of gammas in this range (i.e., above 3.0 MeV) is extremely low. Therefore, all photons with energies in the range of 0.45 to 3.0 MeV are included in the shielding calculations.

The primary source of activity in the non-fuel regions of an assembly arises from the activation of ^{59}Co to ^{60}Co. The primary source of ^{59}Co in a fuel assembly is impurities in the steel structural material above and below the fuel. The zircaloy in these regions is neglected since it does not have a significant ^{59}Co impurity level. Reference [5.2.2] indicates that the impurity level in steel is 800 ppm or 0.8 gm/kg. Therefore, inconel and stainless steel in the non-fuel regions are both assumed to have the same 0.8 gm/kg impurity level.

Some of the PWR fuel assembly designs (B&W and WE 15x15) utilized inconel in-core grid spacers while other PWR fuel designs use zircaloy in-core grid spacers. In the mid 1980s, the fuel assembly designs using inconel in-core grid spacers were altered to use zircaloy in-core grid spacers. Since both designs may be loaded into the HI-STORM FW system, the gamma source for the PWR zircaloy clad fuel assembly includes the activation of the in-core grid spacers. Although BWR assembly grid spacers are zircaloy, some assembly designs have inconel springs in conjunction with the grid spacers. The gamma source for the BWR zircaloy clad fuel assembly includes the activation of these springs associated with the grid spacers.

The non-fuel data listed in Table 5.2.1 were taken from References [5.2.2], [5.2.4], and [5.2.5]. As stated above, a Cobalt-59 impurity level of 0.8 gm/kg was used for both inconel and stainless steel. Therefore, there is little distinction between stainless steel and inconel in the source term generation and since the shielding characteristics are similar, stainless steel was used in the MCNP calculations instead of inconel. The BWR masses for an 8x8 fuel assembly were used. These masses are also appropriate for the 10x10 assembly since the masses of the non-fuel hardware from a 10x10 and an 8x8 are approximately the same. The masses listed are those of the steel components. The zircaloy in these regions was not included because zircaloy does not produce significant activation.

The masses in Table 5.2.1 and Table 5.2.18 were used to calculate a ^{59}Co impurity level in the fuel assembly material. The grams of impurity were then used in ORIGAMI to calculate a ^{60}Co activity level for the desired burnup and decay time. The methodology used to determine the activation level was developed from Reference [5.2.3] and is described here.

1. The activity of the ^{60}Co is calculated using ORIGAMI. The flux used in the calculation was the in-core fuel region flux at full power.

2. The activity calculated in Step 1 for the region of interest was modified by the appropriate scaling factors listed in Table 5.2.6 and Table 5.2.21. These scaling factors were taken from Reference [5.2.3].

Tables 5.2.7 through 5.2.10 provide the ^{60}Co activity utilized in the shielding calculations for normal and accident conditions for the non-fuel regions of the assemblies in the MPC-37 and the MPC-89. Table 5.2.22 provide those data for the assemblies in the MPC-32ML.

In addition to the two sources already mentioned, a third source arises from (n,γ) reactions in the material of the MPC and the overpack. This source of photons is properly accounted for in MCNP when a neutron calculation is performed in a coupled neutron-gamma mode.

5.2.2 Neutron Source

It is well known that the neutron source strength increases as enrichment decreases, for a constant burnup and decay time. This is due to the increase in Pu content in the fuel, which increases the inventory of other transuranium nuclides such as Cm. The gamma source also varies with enrichment, although only slightly. Because of this effect and in order to obtain conservative source terms, low initial fuel enrichments were chosen for the BWR and PWR design basis fuel assemblies under normal and accident conditions, respectively, as discussed in Subsection 5.2.8.

The neutron source calculated for the design basis fuel assemblies for the MPCs and the design basis fuel are listed in Tables 5.2.11 through 5.2.14, and Table 5.2.23 in neutrons/s for the selected burnup and cooling times used in the shielding evaluations for normal and accident conditions. The neutron spectrum is generated in ORIGAMI.

5.2.3 Non-Fuel Hardware

Burnable poison rod assemblies (BPRAs), thimble plug devices (TPDs), control rod assemblies (CRAs), and axial power shaping rods (APSRs) are permitted for storage in the HI-STORM FW system as an integral part of a PWR fuel assembly. BPRAs and TPDs may be stored in any fuel location while CRAs and APSRs are restricted as specified in Subsection 2.1.

5.2.3.1 BPRAs and TPDs

Burnable poison rod assemblies (BPRA) (including wet annular burnable absorbers) and thimble plug devices (TPD) (including orifice rod assemblies, guide tube plugs, and water displacement guide tube plugs) are an integral, yet removable, part of a large portion of PWR fuel. The TPDs are not used in all assemblies in a reactor core but are reused from cycle to cycle. Therefore, these devices can achieve very high burnups. In contrast, BPRAs are burned with a fuel assembly in core and are not reused. In fact, many BPRAs are removed after one or two cycles before the fuel assembly is discharged. Therefore, the achieved burnup for BPRAs is not significantly different from that of a fuel assembly. Vibration suppressor inserts are considered to be in the same category as BPRAs for the purposes of the analysis in this chapter since these devices have the same configuration (long non-absorbing thimbles which extend into the active fuel region) as a BPRA without the burnable poison.

TPDs are made of stainless steel and contain a small amount of inconel. These devices extend down into the plenum region of the fuel assembly but typically do not extend into the active fuel region. Since these devices are made of stainless steel, there is a significant amount of cobalt-60 produced during irradiation. This is the only significant radiation source from the activation of steel and inconel.

BPRAs are made of stainless steel in the region above the active fuel zone and may contain a small amount of inconel in this region. Within the active fuel zone the BPRAs may contain 2-24

rodlets which are burnable absorbers clad in either zircaloy or stainless steel. The stainless steel clad BPRAs create a significant radiation source (Co-60) while the zircaloy clad BPRAs create a negligible radiation source. Therefore, the stainless steel clad BPRAs are bounding.

SAS2H and ORIGEN-S were used to calculate a radiation source term for the TPDs and BPRAs. In the ORIGEN-S calculations the cobalt-59 impurity level was conservatively assumed to be 0.8 gm/kg for stainless steel and 4.7 gm/kg for inconel. These calculations were performed by irradiating the appropriate mass of steel and inconel using the flux calculated for the design basis W 17x17 fuel assembly. The mass of material in the regions above the active fuel zone was scaled by the appropriate scaling factors listed in Table 5.2.6 in order to account for the reduced flux levels above the fuel assembly. The total curies of cobalt were calculated for the TPDs and BPRAs as a function of burnup and cooling time.

Since the HI-STORM FW cask system is designed to store many varieties of PWR fuel, a representative TPD and BPRA had to be determined for the purposes of the analysis. This was accomplished in the HI-STORM 100 FSAR [5.2.17] by analyzing all of the BPRAs and TPDs (Westinghouse and B&W 14x14 through 17x17) found in references [5.2.5] and [5.2.7] to determine the TPD and BPRA which produced the highest Cobalt-60 source term and decay heat for a specific burnup and cooling time. The TPD was determined to be the Westinghouse 17x17 guide tube plug and the BPRA was actually determined by combining the higher masses of the Westinghouse 17x17 and 15x15 BPRAs into a single hypothetical BPRA. The masses of these devices are listed in Table 5.2.15.

Table 5.2.16a shows the curies of Co-60 that were calculated for BPRAs and TPDs in each region of the fuel assembly (e.g. incore, plenum, top) at 3 years of cooling. These activities were used for shielding evaluations of MPC-37 and MPC-32ML. In order to qualify non-fuel hardware with the lower cooling time for MPC-37, the radiation source terms for BPRA and TPD with the cooling time of 1 year, independent of the burnup, have been additionally considered. The Co-60 activities that were calculated for BPRAs and TPDs at 1 year of cooling are presented in Table 5.2.16b. A burnup and cooling time, separate from the fuel assemblies, is used for BPRAs and TPDs. Tables 2.1.25 and 2.II.1.2 of the HI-STORM 100 [5.2.17] list the allowable burnups and cooling times for non-fuel hardware that corresponds to the BPRA. These burnup and cooling times assure that the Co-60 activity remains below the levels specified above. For specific site boundary evaluations, these levels/values can be used if they are bounding. Alternatively, more realistic values can be used.

The HI-STORM 100 [5.2.17] presents dose rates for both BPRAs and TPDs. The results indicate that BPRAs are bounding, therefore all dose rates in this chapter will contain a BPRA in every PWR fuel location. However, Section 5.4 also contains a quantitative dose rates comparison from BPRAs and TPDs to validate this approach. Subsection 5.4.4 discusses the increase in the cask dose rates due to the insertion of BPRAs into fuel assemblies.

It should be noted that 16x16D fuel assemblies may actually not use BPRAs, but the BPRAs with the minimum allowable cooling time are conservatively considered in MPC-32ML shielding calculations to demonstrate compliance with the applicable safety limits.

burnup and cooling time limits are derived based on the allowable decay heat limits.

5.2.6 Fuel Assembly Neutron Sources

Neutron source assemblies (NSAs) are used in reactors for startup. There are different types of neutron sources (e.g. californium, americium-beryllium, plutonium-beryllium, polonium-beryllium, antimony-beryllium). These neutron sources are typically inserted into the water rod of a fuel assembly and are usually removable.

During in-core operations, the stainless steel and inconel portions of the NSAs become activated, producing a significant amount of Co-60. A detailed discussion about NSAs is provided in reference [5.2.17], where it is concluded that activation from NSAs are bounded by activation from BPRAs.

For ease of implementation in the CoC, the restriction concerning the number of NSAs is being applied to all types of NSAs. In addition, conservatively NSAs are required to be stored in the inner region of the MPC basket as specified in Subsection 2.1. Further limitations allow for only one NSA to be stored in the MPC-37 (see Table 2.1.1a), or MPC-32ML (see Table 2.1.1b).

5.2.7 Design Basis Burnup and Cooling Times

For the fuel to be loaded into the HI-STORM FW system, the uniform and regionalized design basis loading curves (which specify burnup and cooling time combinations for each region of the cask) are provided in Tables 2.1.9 and 2.1.10 using polynomial equation and corresponding polynomial coefficients.

In order to qualify the HI-STORM FW System with allowable burnup, cooling time combinations in Tables 2.1.9 and 2.1.10, the considered range of burnup, enrichment and cooling time combinations is selected as follows:

- 5 GWD/MTU burnup and burnups from 10 GWD/MTU to 70 GWD/MTU, in increments of 10 GWD/MTU for MPC-37 and MPC-89, and burnups from 15 GWD/MTU to 70 GWD/MTU, in increments of 5 GWD/MTU for MPC-32ML;
- The cooling time is calculated for each burnup using the equation and polynomial coefficients in Tables 2.1.9 and 2.1.10. The determined cooling times are rounded down to the nearest available cooling time in the calculated source terms library, which provides a significant conservatism, especially, in the low cooling time area. For MPC-37 and MPC-89, the value of 1 year (minimum allowed cooling time) is used for all cooling times below 1 year. For MPC-32ML, the value of 3 year (minimum allowed cooling time) is used for all cooling times below 3 years;
- The appropriate burnup-specific lower bound enrichment is selected according to Table 5.2.17.

The final sets of the burnup, enrichment and cooling time combinations are provided in Tables 5.0.3 through 5.0.5.

5.2.8 Fuel Enrichment

As discussed in Subsection 5.2.2, enrichments have a significant impact on neutron dose rates, with lower enrichments resulting in higher dose rates at the same burnup. For assemblies with higher burnups (which result in high neutron source terms) and/or locations that are more neutron dominated, the enrichment would therefore be important in order to present dose rates in a conservative way. However, it would be impractical and excessively conservative to perform all calculations at bounding low enrichment, since low enrichments are generally only found in lower burned assemblies. Therefore, a conservatively low enrichment value is selected based on the burnup. Specifically, based on industry information on more than 130,000 PWR and 185,000 BWR assemblies, the fuel assemblies are distributed over different burnup range bins (0 5, 5-10 … 70-75 GWd/mtU). For instance, for a given burnup group of 5-10 GWd/mtU, the data array includes the enrichments for the fuel assemblies with the burnup from 5,000 MWd/mtU to 9,999 MWd/mtU. Then, in each burnup group, the array of enrichments is sorted from low to high, and the array index that precedes a fraction of 99% of the population is determined. The fuel enrichment under this array position represents the lower bound enrichment that conservatively bounds 99% of the fuel assembly population. The calculated and finally established lower bound enrichment values are summarized in Table 5.2.17.

Given that the considered baskets contain a relatively large number of available cells for fuel loading, selecting the minimum enrichment for all assemblies is considered reasonably conservative. The typical content of the basket would have most assemblies well above the lower bound enrichment assumed in the analyses, so even if a small number of assemblies would be below the assumed minimum, that would have a negligible effect or be essentially inconsequential for the dose rates around the cask. Furthermore, the site-specific shielding analysis shall consider actual or bounding fuel enrichment. Therefore, an explicit lower enrichment limit for the fuel assemblies is not considered necessary.

Table 5.2.2 CALCULATED MPC-37 PWR FUEL GAMMA SOURCE PER ASSEMBLY FOR A SELECTED BURNUP AND COOLING TIME FOR NORMAL CONDITIONS			
Lower Energy	**Upper Energy**	**30,000 MWD/MTU 4-Year Cooling**	
(MeV)	(MeV)	(MeV/s)	(Photons/s)
0.45	0.7	1.44E+15	2.50E+15
0.7	1.0	6.08E+14	7.15E+14
1.0	1.5	1.44E+14	1.16E+14
1.5	2.0	1.19E+13	6.78E+12
2.0	2.5	1.34E+13	5.95E+12
2.5	3.0	1.07E+12	3.88E+11
Total		2.21E+15	3.34E+15

Table 5.2.3 CALCULATED MPC-37 PWR FUEL GAMMA SOURCE PER ASSEMBLY FOR BURNUP AND COOLING TIME FOR ACCIDENT CONDITIONS			
Lower Energy	**Upper Energy**	**70,000 MWD/MTU 2.8-Year Cooling**	
(MeV)	(MeV)	(MeV/s)	(Photons/s)
0.45	0.7	4.83E+15	8.40E+15
0.7	1.0	2.91E+15	3.42E+15
1.0	1.5	5.49E+14	4.39E+14
1.5	2.0	4.12E+13	2.36E+13
2.0	2.5	4.49E+13	2.00E+13
2.5	3.0	3.80E+12	1.38E+12
Total		8.37E+15	1.23E+16

Table 5.2.4

CALCULATED MPC-89 BWR FUEL GAMMA SOURCE PER ASSEMBLY FOR A SELECTED BURNUP AND COOLING TIME FOR NORMAL CONDITIONS

Lower Energy	**Upper Energy**	**40,000 MWD/MTU 3.5-Year Cooling**	
(MeV)	(MeV)	(MeV/s)	(Photons/s)
0.45	0.7	8.07E+14	1.40E+15
0.7	1.0	3.72E+14	4.38E+14
1.0	1.5	8.11E+13	6.49E+13
1.5	2.0	6.36E+12	3.63E+12
2.0	2.5	6.88E+12	3.06E+12
2.5	3.0	5.69E+11	2.07E+11
Total		1.27E+15	1.91E+15

Table 5.2.5

CALCULATED MPC-89 BWR FUEL GAMMA SOURCE PER ASSEMBLY FOR BURNUP AND COOLING TIME FOR ACCIDENT CONDITIONS

Lower Energy	**Upper Energy**	**70,000 MWD/MTU 2.4-Year Cooling**	
(MeV)	(MeV)	(MeV/s)	(Photons/s)
0.45	0.7	1.91E+15	3.32E+15
0.7	1.0	1.13E+15	1.33E+15
1.0	1.5	2.10E+14	1.68E+14
1.5	2.0	1.70E+13	9.70E+12
2.0	2.5	1.80E+13	8.00E+12
2.5	3.0	1.60E+12	5.84E+11
Total		3.29E+15	4.84E+15

Table 5.2.7

CALCULATED MPC-37 ^{60}Co SOURCE PER ASSEMBLY FOR DESIGN BASIS FUEL AT A SELECTED BURNUP AND COOLING TIME FOR NORMAL CONDITIONS

Location	**30,000 MWD/MTU and 4-Year Cooling (curies)**
Lower End Fitting	73.84
Gas Plenum Springs	14.39
Gas Plenum Spacer	10.22
Expansion Springs	N/A
Incore Grid Spacers	306.62
Upper End Fitting	49.12
Handle	N/A

Table 5.2.8

CALCULATED MPC-37 ^{60}Co SOURCE PER ASSEMBLY FOR DESIGN BASIS FUEL AT BURNUP AND COOLING TIME FOR ACCIDENT CONDITIONS

Location	**70,000 MWD/MTU and 2.8-Year Cooling (curies)**
Lower End Fitting	133.42
Gas Plenum Springs	26.01
Gas Plenum Spacer	18.48
Expansion Springs	N/A
Incore Grid Spacers	554.05
Upper End Fitting	88.76
Handle	NA

Table 5.2.9

CALCULATED MPC-89 ^{60}Co SOURCE PER ASSEMBLY FOR DESIGN BASIS FUEL AT A SELECTED BURNUP AND COOLING TIME FOR NORMAL CONDITIONS

Location	**40,000 MWD/MTU and 3.5-Year Cooling (curies)**
Lower End Fitting	57.08
Gas Plenum Springs	17.44
Gas Plenum Spacer	N/A
Expansion Springs	3.17
Grid Spacer Springs	26.16
Upper End Fitting	15.86
Handle	1.98

Table 5.2.10

CALCULATED MPC-89 ^{60}Co SOURCE PER ASSEMBLY FOR DESIGN BASIS FUEL AT BURNUP AND COOLING TIME FOR ACCIDENT CONDITIONS

Location	**70,000 MWD/MTU and 2.4-Year Cooling (curies)**
Lower End Fitting	92.98
Gas Plenum Springs	28.41
Gas Plenum Spacer	N/A
Expansion Springs	5.17
Grid Spacer Springs	42.61
Upper End Fitting	25.83
Handle	3.23

Table 5.2.11 CALCULATED MPC-37 PWR NEUTRON SOURCE PER ASSEMBLY FOR A SELECTED BURNUP AND COOLING TIME FOR NORMAL CONDITIONS		
Lower Energy (MeV)	**Upper Energy (MeV)**	**30,000 MWD/MTU 4-Year Cooling (Neutrons/s)**
1.0e-01	4.0e-01	1.13E+07
4.0e-01	9.0e-01	2.47E+07
9.0e-01	1.4	2.47E+07
1.4	1.85	1.97E+07
1.85	3.0	3.67E+07
3.0	6.43	3.34E+07
6.43	20.0	3.18E+06
Totals		1.54E+08

Table 5.2.12 CALCULATED MPC-37 PWR NEUTRON SOURCE PER ASSEMBLY FOR BURNUP AND COOLING TIME FOR ACCIDENT CONDITIONS		
Lower Energy (MeV)	**Upper Energy (MeV)**	**70,000 MWD/MTU 2.8-Year Cooling (Neutrons/s)**
1.0e-01	4.0e-01	1.17E+08
4.0e-01	9.0e-01	2.55E+08
9.0e-01	1.4	2.55E+08
1.4	1.85	2.03E+08
1.85	3.0	3.77E+08
3.0	6.43	3.45E+08
6.43	20.0	3.36E+07
Totals		1.59E+09

Table 5.2.13

CALCULATED MPC-89 BWR NEUTRON SOURCE
PER ASSEMBLY
FOR DESIGN BASIS FUEL
FOR A SELECTED BURNUP AND COOLING TIME FOR NORMAL CONDITIONS

Lower Energy (MeV)	**Upper Energy (MeV)**	**40,000 MWD/MTU 3.5-Year Cooling (Neutrons/s)**
1.0e-01	4.0e-01	9.33E+06
4.0e-01	9.0e-01	2.03E+07
9.0e-01	1.4	2.03E+07
1.4	1.85	1.62E+07
1.85	3.0	3.01E+07
3.0	6.43	2.74E+07
6.43	20.0	2.63E+06
Totals		1.26E+08

Table 5.2.14

CALCULATED MPC-89 BWR NEUTRON SOURCE
PER ASSEMBLY
FOR DESIGN BASIS FUEL
FOR BURNUP AND COOLING TIME FOR ACCIDENT CONDITIONS

Lower Energy (MeV)	**Upper Energy (MeV)**	**70,000 MWD/MTU 2.4-Year Cooling (Neutrons/s)**
1.0e-01	4.0e-01	5.43E+07
4.0e-01	9.0e-01	1.18E+08
9.0e-01	1.4	1.18E+08
1.4	1.85	9.43E+07
1.85	3.0	1.75E+08
3.0	6.43	1.61E+08
6.43	20.0	1.58E+07
Totals		7.37E+08

Table 5.2.15
DESCRIPTION OF DESIGN BASIS BURNABLE POISON ROD ASSEMBLY AND THIMBLE PLUG DEVICE

Region	**BPRA**	**TPD**
Upper End Fitting (kg of steel)	2.62	2.3
Upper End Fitting (kg of inconel)	0.42	0.42
Gas Plenum Spacer (kg of steel)	0.77488	1.71008
Gas Plenum Springs (kg of steel)	0.67512	1.48992
In-core (kg of steel)	13.2	N/A

Table 5.2.16a
DESIGN BASIS COBALT-60 ACTIVITIES FOR BURNABLE POISON ROD ASSEMBLIES AND THIMBLE PLUG DEVICES
AT 3-YEARS COOLING

Region	**BPRA**	**TPD**
Upper End Fitting (curies Co-60)	32.7	25.21
Gas Plenum Spacer (curies Co-60)	5.0	9.04
Gas Plenum Springs (curies Co-60)	8.9	15.75
In-core (curies Co-60)	848.4	N/A

Table 5.2.16b
DESIGN BASIS COBALT-60 ACTIVITIES FOR BURNABLE POISON ROD ASSEMBLIES AND THIMBLE PLUG DEVICES
AT 1-YEAR COOLING

Region	**BPRA**	**TPD**
Upper End Fitting (curies Co-60)	77	120
Gas Plenum Spacer (curies Co-60)	12	43
Gas Plenum Springs (curies Co-60)	21	75
In-core (curies Co-60)	2010	N/A

Table 5.2.17

LOWER BOUND INITIAL ENRICHMENTS USED IN THE SOURCE TERM CALCULATIONS[1]

Burnup Range[2] (MWD/MTU)	**Initial Enrichment (wt.% ^{235}U)**	
	PWR Fuel	**BWR Fuel**
0,000-5,000	0.7	0.7
5,000-10,000	1.1	0.7
10,000-15,000	1.1	0.9
15,000-20,000	1.1	1.5
20,000-25,000	1.6	1.6
25,000-30,000	2.0	2.0
30,000-35,000	2.4	2.4
35,000-40,000	2.6	2.7
40,000-45,000	3.0	3.0
45,000-50,000	3.3	3.2
50,000-55,000	3.6	3.3
55,000-60,000	3.6	3.7
60,000-65,000	3.9	3.7
65,000-70,000	4.2	3.7
70,000-75,000	4.5	4.0

Notes:

1. Burnup and initial enrichments listed in this table are used in source term calculations for the shielding evaluation of the loading patterns in Figures 1.2.3 through 1.2.7 (MPC-37 and MPC-89) and uniform loading in Table 1.2.3b (MPC-32ML).
2. The burnup ranges do not overlap. Therefore, for MPC-37 and MPC-89, 20,000-25,000 MWD/MTU means 20,000-24,999.9 MWD/MTU, etc. This note does not apply to the maximum burnup of 75,000 MWD/MTU. For MPC-32ML, a lower enrichment value from a preceding burnup range is conservatively used for a transitional burnup, i.e. 20,000-25,000 MWD/MTU means 20,000.1-25,000 MWD/MTU, etc.

Table 5.2.18 DESCRIPTION OF 16X16D DESIGN BASIS CLAD FUEL	
	PWR (MPC-32ML)
Assembly type/class	16x16D
Active fuel length (cm)	390
No. of fuel rods	236
Rod pitch (cm)	1.43
Cladding material	Zircaloy-4
Rod diameter (cm)	1.075
Cladding thickness (cm)	0.068
Pellet diameter (cm)	0.911
Pellet material	UO_2
Pellet density (g/cc)	10.45 (95.3% of theoretical)
Enrichment (w/o ^{235}U)	3.6
Specific power (MW/MTU)	36.56
Weight of UO_2 (kg)††	624.651
Weight of U (kg)††	552.639
No. of Water Rods/ Guide Tubes	20
Water Rod/ Guide Tube O.D. (cm)	1.41
Water Rod/ Guide Tube Thickness (cm)	0.077

†† Derived from parameters in this table.

Table 5.2.18 (continued) DESCRIPTION OF 16X16D DESIGN BASIS FUEL	
	PWR (MPC-32ML)
Lower End Fitting (kg)	10.795 (steel/inconel)
Gas Plenum Springs (kg)	1.474 (steel/inconel)
Gas Plenum Spacer (kg)	1.692 (steel/inconel)
Upper End Fitting (kg)	12.344 (steel/inconel)
Incore Grid Spacers (kg)	12.67 (inconel)

Table 5.2.19

CALCULATED 16X16D (MPC-32ML) PWR FUEL GAMMA SOURCE PER ASSEMBLY FOR SELECTED DESIGN BASIS BURNUP AND COOLING TIME FOR NORMAL CONDITIONS

Lower Energy	**Upper Energy**	**45,000 MWD/MTU 5-Year Cooling**	
(MeV)	(MeV)	(MeV/s)	(Photons/s)
0.45	0.7	2.16E+15	3.76E+15
0.7	1.0	9.10E+14	1.07E+15
1.0	1.5	2.09E+14	1.67E+14
1.5	2.0	1.16E+13	6.62E+12
2.0	2.5	6.87E+12	3.05E+12
2.5	3.0	7.39E+11	2.69E+11
Total		3.30E+15	5.01E+15

Table 5.2.20

CALCULATED 16X16D (MPC-32ML) PWR FUEL GAMMA SOURCE PER ASSEMBLY FOR DESIGN BASIS BURNUP AND COOLING TIME FOR ACCIDENT CONDITIONS

Lower Energy	**Upper Energy**	**62,500 MWD/MTU 8-Year Cooling**	
(MeV)	(MeV)	(MeV/s)	(Photons/s)
0.45	0.7	2.07E+15	3.61E+15
0.7	1.0	5.30E+14	6.23E+14
1.0	1.5	1.67E+14	1.34E+14
1.5	2.0	7.19E+12	4.11E+12
2.0	2.5	6.65E+11	2.95E+11
2.5	3.0	1.00E+11	3.64E+10
Total		2.78E+15	4.37E+15

Table 5.2.21

SCALING FACTORS USED IN CALCULATING THE 16X16D (MPC-32ML) ^{60}Co SOURCE

Region	**PWR (MPC-32ML)**
Upper End Fitting	0.05
Gas Plenum Spacer	0.1
Gas Plenum Springs	0.2
Incore Grid Spacer	1.0
Lower End Fitting	0.2

Table 5.2.22

CALCULATED ^{60}Co SOURCE PER ASSEMBLY FOR 16X16D (MPC-32ML) AT SELECTED DESIGN BASIS BURNUP AND COOLING TIME COMBINATIONS FOR NORMAL AND ACCIDENT CONDITIONS

Location	**45,000 MWD/MTU and 5-Year Cooling (curies)**	**62,500 MWD/MTU and 8-Year Cooling (curies)**
Upper End Fitting	41.46	29.76
Gas Plenum Springs	11.37	8.16
Gas Plenum Spacer	19.80	14.21
Incore Grid Spacers	851.14	610.89
Lower End Fitting	145.04	104.10

Table 5.2.23

CALCULATED 16X16D (MPC-32ML) PWR NEUTRON SOURCE PER ASSEMBLY AT SELECTED DESIGN BASIS BURNUP AND COOLING TIME COMBINATIONS FOR NORMAL AND ACCIDENT CONDITIONS

Lower Energy (MeV)	**Upper Energy (MeV)**	**45,000 MWD/MTU 5-Year Cooling (Neutrons/s)**	**62,500 MWD/MTU 8-Year Cooling (Neutrons/s)**
1.0e-01	4.0e-01	4.75E+07	7.29E+07
4.0e-01	9.0e-01	1.04E+08	1.59E+08
9.0e-01	1.4	1.04E+08	1.59E+08
1.4	1.85	8.27E+07	1.27E+08
1.85	3.0	1.53E+08	2.36E+08
3.0	6.43	1.40E+08	2.15E+08
6.43	20.0	1.34E+07	2.06E+07
Totals		6.44E+08	9.89E+08

5.3 MODEL SPECIFICATIONS

The shielding analysis of the HI-STORM FW system was performed with MCNP5 [5.1.1]. MCNP is a Monte Carlo transport code that offers a full three-dimensional combinatorial geometry modeling capability including such complex surfaces as cones and tori. This means that no gross approximations were required to represent the HI-STORM FW system, including the HI-TRAC transfer casks, in the shielding analysis. A sample input file for MCNP is provided in Appendix 5.A.

As discussed in Subsection 5.1.1, off-normal conditions do not have any implications for the shielding analysis. Therefore, the MCNP models and results developed for the normal conditions also represent the off-normal conditions. Subsection 5.1.2 discussed the accident conditions and stated that the only accident that would impact the shielding analysis would be a loss of the neutron shield (water) in the HI-TRAC. Therefore, the MCNP model of the normal HI-TRAC condition has the neutron shield in place while the accident condition replaces the neutron shield with void. Subsection 5.1.2 also mentioned that there is no credible accident scenario that would impact the HI-STORM shielding analysis. Therefore, models and results for the normal and accident conditions are identical for the HI-STORM overpack.

5.3.1 Description of the Radial and Axial Shielding Configuration

Chapter 1 provides the drawings that describe the HI-STORM FW system, including the HI-TRAC transfer cask. These drawings, using nominal dimensions, were used to create the MCNP models used in the radiation transport calculations. Modeling deviations from these drawings are discussed below. Figures 5.3.1 and 5.3.2, as well as Figures 5.3.12 and 5.3.13, show cross sectional views of the HI-STORM FW overpack, MPCs, and basket cells as they are modeled in MCNP. Figures 5.3.1 and 5.3.2 were created in VISED and are drawn to scale. The inlet and outlet vents were modeled explicitly, therefore, streaming through these components is accounted for in the calculations of the dose adjacent to the overpack and at 1 meter. Figures 5.3.3 and 5.3.4 show a cross sectional view of the HI-TRAC VW with the MPC-37 and MPC-89, respectively, as it was modeled in MCNP. These figures were created in VISED and are drawn to scale.

Figure 5.3.5 shows a cross sectional view of the HI-STORM FW overpack with the as-modeled thickness of the various materials.

Figure 5.3.6 shows the axial representation of the HI-STORM FW overpack with the XL lid.

Figure 5.3.7 shows axial cross-sectional views of the HI-TRAC VW transfer casks with the as-modeled dimensions and materials specified. Figures 5.3.8 and 5.3.9 shows fully labeled radial cross-sectional view of the HI-TRAC VW transfer casks and each of the MPCs.

Figure 5.3.14 shows a cross sectional view of the HI-TRAC VW Version V2 with the Neutron Shield Cylinder and MPC-89, as it was modeled in MCNP. Figure 5.3.15 shows a cross sectional view of the HI-TRAC VW Version V2 with the MPC-89, in which the MPC and annulus between the MPC and HI-TRAC inner cavity are filled with water, as it was modeled in MCNP.

Calculations were performed for the HI-STORM 100 [5.2.17] to determine the acceptability of homogenizing the fuel assembly versus explicit modeling. Based on these calculations it was concluded that it is acceptable to homogenize the fuel assembly without loss of accuracy. The width of the PWR (in MPC-37) and BWR homogenized fuel assembly is equal to 17 times the pitch and 10 times the pitch, respectively. Homogenization results in a noticeable decrease in run time. The width of 16x16D fuel assembly in MCNP model of MPC-32ML is provided as a note under Table 5.3.1.

Several conservative approximations were made in modeling the MPC. The conservative approximations are listed below.

1. The fuel shims are not modeled because they are not needed on all fuel assembly types. However, most PWR fuel assemblies will have fuel shims. The fuel shim length for the design basis fuel assembly type determines the positioning of the fuel assembly for the shielding analysis. This is conservative since it removes steel that would provide a small amount of additional shielding.

2. The MPC basket supports are not modeled. This is conservative since it removes material that would provide a small increase in shielding.

3. The MPC cavity height, MPC height and HI-STORM FW cavity height for HI-STORM FW with MPC-32ML are calculated using the length of fuel without non-fuel hardware and/or DFC, and data provided in Table 3.2.1.

Conservatively, the zircaloy flow channels are not included in the modeling of the BWR assemblies, unless explicitly mentioned.

Also, it should be noted that all dose calculations presented in this Chapter are performed with the HI-TRAC VW (standard) model unless otherwise noted. Site specific analysis of the HI-TRAC VW should consider the specific version of the HI-TRAC VW (for example, HI-TRAC VW (standard), HI-TRAC VW Version P, HI-TRAC VW Version V, HI-TRAC VW Version V2). Additionally, the HI-TRAC VW radial lead thickness, which is a site specific feature that is maximized to the extent possible without exceeding the site crane capacity or site dimensional constraints, is also considered in site specific shielding evaluations.

5.3.1.1 Fuel Configuration

As described earlier, the active fuel region is modeled as a homogenous zone. The end fittings and the plenum regions are also modeled as homogenous regions of steel. The masses of steel used in these regions are shown in Table 5.2.1 and Table 5.2.18. The axial description of the design basis fuel assemblies is provided in Table 5.3.1. Figures 5.3.10 and 5.3.11 graphically depict the location of the PWR and BWR fuel assemblies within the HI-STORM FW system. The axial locations of the basket, inlet vents, and outlet vents are shown in these figures.

5.3.1.2 Streaming Considerations

The MCNP model of the HI-STORM overpack completely describes the inlet and outlet vents, thereby properly accounting for their streaming effect. Further, the top lid is properly modeled with its reduced diameter, which accounts for higher localized dose rates on the top surface of the HI-STORM.

The MCNP model of the HI-TRAC transfer cask accounts for the fins through the HI-TRAC water jacket, as discussed in Subsection 5.4.1, as well as the open annulus.

5.3.2 Regional Densities

Composition and densities of the various materials used in the HI-STORM FW system and HI-TRAC shielding analyses are given in Table 5.3.2. All of the materials and their actual geometries are represented in the MCNP model.

The concrete density shown in Table 5.3.2 is the minimum concrete density analyzed in this chapter. The HI-STORM FW overpacks are designed in such a way that the concrete density in the body of the overpack can be increased to approximately 3.2 g/cm^3 (200 lb/cu-ft). Increasing the density beyond the value in Table 5.3.2 would result in a significant reduction in the dose rates. This may be beneficial based on on-site and off-site ALARA considerations.

The water density inside the MPC corresponds to the maximum allowable water temperature within the MPC. The water density in the water jacket corresponds to the maximum allowable temperature at the maximum allowable pressure. As mentioned, the HI-TRAC transfer cask may be equipped with a water jacket to provide radial neutron shielding. Demineralized water (borated water) will be utilized in the water jacket. To ensure operability for low temperature conditions, ethylene glycol (25% in solution) may be added to reduce the freezing point for low temperature operations. Calculations were performed for the HI-STORM 100 system [5.2.17] to determine the effect of the ethylene glycol on the shielding effectiveness of the radial neutron shield. Based on these calculations, it was concluded that the addition of ethylene glycol (25% in solution) does not reduce the shielding effectiveness of the radial neutron shield.

Table 5.3.2 (continued)

COMPOSITION OF THE MATERIALS IN THE HI-STORM FW SYSTEM

Component	Density (g/cm^3)	Elements	Mass Fraction (%)
BWR Fuel Region Mixture [1]	4.239 (5.0 wt% U-235)	^{235}U	3.617
		^{238}U	68.722
		O	9.724
		Zr	17.618
		N	0.009
		Cr	0.018
		Fe	0.022
		Sn	0.269
BWR Fuel Region Mixture [2]	4.781 (5.0 wt% U-235)	^{235}U	3.207
		^{238}U	60.935
		O	8.623
		Zr	26.752
		N	0.014
		Cr	0.027
		Fe	0.034
		Sn	0.409
PWR Fuel Region Mixture (MPC-37)	3.769 (5.0 wt% U-235)	^{235}U	3.709
		^{238}U	70.474
		O	9.972
		Zr	15.565
		Cr	0.016
		Fe	0.033
		Sn	0.230

Table 5.3.2 (continued)

COMPOSITION OF THE MATERIALS IN THE HI-STORM FW SYSTEM

Component	**Density (g/cm^3)**	**Elements**	**Mass Fraction (%)**
Water w/ 2000 ppm	0.958	B-10	0.036
		B-11	0.164
		H	11.17
		O	88.63
Concrete	2.4	H	1.0
		O	53.2
		Si	33.7
		Al	3.4
		Na	2.9
		Ca	4.4
		Fe	1.4
Holtite-A **Withheld in Accordance with 10 CFR 2.390**	**Withheld in Accordance with 10 CFR 2.390**		

[1] BWR fuel region mixture (no fuel channel) for dose rates based on the XL Lid Design.
[2] BWR fuel region mixture (fuel channel included) for dose rates based on the Standard Lid Design.

Proprietary Information Withheld in Accordance with 10 CFR 2.390

Figure 5.3.6
HI-STORM FW OVERPACK WITH XL LID CROSS SECTIONAL ELEVATION VIEW

Proprietary Information Withheld in Accordance with 10 CFR 2.390

Figure 5.3.10

AXIAL LOCATION OF PWR DESIGN BASIS FUEL IN THE HI-STORM FW OVERPACK
(Standard Lid is Shown)

Proprietary Information Withheld in Accordance with 10 CFR 2.390

Figure 5.3.11

AXIAL LOCATION OF BWR DESIGN BASIS FUEL IN THE HI-STORM FW OVERPACK
(Standard Lid is Shown)

Proprietary Information Withheld in Accordance with 10 CFR 2.390

Figure 5.3.14

HI-TRAC VW VERSION V2 WITH NEUTRON SHIELD CYLINDER AND MPC-89 CROSS SECTIONAL VIEW AS MODELED IN MCNP†

† This figure is drawn to scale using VISED.

Proprietary Information Withheld in Accordance with 10 CFR 2.390

Figure 5.3.15

HI-TRAC VW VERSION V2 WITH WATER PRESENT IN THE MPC-89 AND ANNULUS CROSS SECTIONAL VIEW AS MODELED IN MCNP†

† This figure is drawn to scale using VISED.

$$R_{Total} = \frac{\sqrt{S_{Total}^2}}{T_{Total}} = \frac{\sqrt{\sum_{i=1}^{n} S_i^2}}{T_{Total}} = \frac{\sqrt{\sum_{i=1}^{n} (R_i \times T_i)^2}}{T_{Total}} \qquad \text{(Equation 5.4.5)}$$

where,

i	=	tally component index
n	=	total number of components
T_{Total}	=	total estimated tally
T_i	=	tally i component
S^2_{Total}	=	total estimated variance
S^2_i	=	variance of the i component
R_i	=	relative error of the i component
R_{Total}	=	total estimated relative error

Note that the two-step approach outlined above allows the accurate consideration of the neutron and gamma source spectrum, and the location of the individual assemblies, since the tallies are calculated in MCNP as a function of the starting energy group and the assembly location, and then in the second step multiplied with the source strength in each group in each location. It is therefore equivalent to a one-step calculation where source terms are directly specified in the MCNP input files, except for the following approximations:

The first approximation is that fuel is modeled as fresh UO_2 fuel (rather than spent fuel) in MCNP, with an upper bound enrichment. The second approximation is related to the axial burnup profile. The profile is modeled by assigning a source probability to each of the 10 axial sections of the active region, based on a representative axial burnup profile [5.2.17]. For fuel gammas, the probability is proportional to the burnup, since the gamma source strength changes essentially linearly with burnup. For neutrons, the probability is proportional to the burnup raised to the power of 4.2, since the neutron source strength is proportional to the burnup raised to about that power [5.4.7]. This is a standard approach that has been previously used in the licensing calculations for the HI-STAR 100 cask [5.4.8] and HI-STORM 100 system [5.2.17].

Tables 5.1.5, 5.1.6 and 5.1.11 provide the design basis dose rates adjacent to the HI-STORM overpack during normal conditions for the MPC types in Table 1.0.1. Tables 5.1.7, 5.1.8 and 5.1.12 provide the design basis dose rates at one meter from the overpack. A detailed discussion of the normal, off-normal, and accident condition dose rates is provided in Subsections 5.1.1 and 5.1.2.

Table 5.4.2 shows the corresponding dose rates adjacent to and one meter away from the HI-TRAC for the fully flooded MPC-37 condition with an empty water-jacket (condition in which

the HI-TRAC is removed from the spent fuel pool). Table 5.4.3 shows the dose rates adjacent to and one meter away from the HI-TRAC for the fully flooded MPC-37 condition with the water jacket filled with water (condition in which welding operations are performed). For the conditions involving a fully flooded MPC-37, the internal water level was 5 inches below the MPC lid. These dose rates represent the various conditions of the HI-TRAC during operations. Comparing these results to Table 5.1.1 (dry MPC-37 and HI-TRAC water jacket filled with water) indicates that the dose rates in the upper and lower portions of the HI-TRAC are significantly reduced with water in the MPC.

Table 5.4.4 shows the corresponding dose rates adjacent to and one meter away from the HI-TRAC for the fully flooded MPC-89 condition with an empty water-jacket. Table 5.4.5 shows the dose rates adjacent to and one meter away from the HI-TRAC for the fully flooded MPC-89 condition with the water jacket filled with water. These results demonstrate that the dose rates on contact at the top and bottom of the HI-TRAC VW are somewhat higher in the MPC-37 case than in the MPC-89 case. The difference in dose rates between MPC-37 and MPC-89 is within approximately 30%. Therefore, the MPC-37 is sufficiently representative for the exposure calculations in Chapter 11 of the SAR.

Previous revisions of this FSAR with a smaller set of loading patterns used a representative (while still conservative) uniform loading conditions for dose evaluations, and analyses for the concrete overpack were performed with the standard lid. For reference purposes, those results are retained in this subsection of the chapter, in Tables 5.4.9 and 5.4.11 through 5.4.14. Table 5.4.9 shows the burnup, enrichment and cooling time combinations that were used. Tables 5.4.11 and 5.4.12 provide the dose rates adjacent to the HI-STORM overpack with the standard lid design during normal conditions for the MPC-37 and MPC-89, respectively. And Tables 5.4.13 and 5.4.14 provide the dose rates at one meter from the HI-STORM overpack with the standard lid design during normal conditions for the MPC-37 and MPC-89, respectively. The dose rates adjacent to and one meter from the HI-TRAC VW for normal conditions (i.e., dry MPC and full water jacket) and uniform loading source terms for the MPC-37 and MPC-89 are listed in Tables 5.4.15 and 5.4.16, respectively.

It should be noted that zircalow flow channels are included in the modeling of the BWR assemblies for HI-STORM FW with MPC-89 and the standard lid. The effect of this deviation is insignificant.

Table 5.4.17 shows the corresponding dose rates adjacent to and one meter away from the HI-TRAC VW Version V2 for the fully flooded MPC-89, flooded annulus between MPC and HI-TRAC Inner Cavity. Table 5.4.18 shows the dose rates adjacent to and one meter away from the HI-TRAC VW Version V2 for the fully flooded MPC-89, flooded annulus between MPC and HI-TRAC Inner Cavity, with Neutron Shield Cylinder present. A temporary steel shield ring pedestal located around the bottom of the Neutron Shield Cylinder to reduce dose rates adjacent to location 1 may be present during handling operations for ALARA purposes. Dose rates are also provided adjacent to location 1 with this temporary steel shield ring pedestal present.

Since MCNP is a statistical code, there is an uncertainty associated with the calculated values. In MCNP the uncertainty is expressed as the relative error which is defined as the standard deviation of the mean divided by the mean. Therefore, the standard deviation is represented as a percentage of the mean. The relative error for the total dose rates presented in this chapter were typically less than 5% and the relative error for the individual dose components was typically less than 10%.

5.4.1 Streaming Through Radial Steel Fins

The HI-STORM FW overpack and the HI-TRAC VW cask utilize radial steel fins for structural support and cooling. The attenuation of neutrons through steel is substantially less than the attenuation of neutrons through concrete and water. Therefore, it is possible to have neutron streaming through the fins that could result in a localized dose peak. The reverse is true for photons, which would result in a localized reduction in the photon dose.

Analysis of the steel fins in the HI-TRAC has previously been performed in the HI-STORM 100 FSAR [5.2.17] and indicates that neutron streaming is noticeable at the surface of the cask. The neutron dose rate on the surface of the steel fin is somewhat higher than the circumferential average dose rate at that location. The gamma dose rate, however, is slightly lower than the circumferential average dose rate at that location. At one meter from the cask surface there is little difference between the dose rates calculated over the fins compared to the other areas of the water jackets.

These conclusions indicate that localized neutron streaming is noticeable on the surface of the transfer casks. However, at one meter from the surface the streaming has dissipated. Since most HI-TRAC operations will involve personnel moving around the transfer cask at some distance from the cask, only surface average dose rates are reported in this chapter.

5.4.2 Damaged Fuel Post-Accident Shielding Evaluation

The Holtec Generic PWR and BWR DFCs are designed to accommodate any PWR or BWR fuel assembly that can physically fit inside the DFC. Damaged fuel assemblies under normal conditions, for the most part, resemble intact fuel assemblies from a shielding perspective. Under accident conditions, it can not be guaranteed that the damaged fuel assembly will remain intact. As a result, the damaged fuel assembly may begin to resemble fuel debris in its possible configuration after an accident.

Since damaged fuel is identical to intact fuel from a shielding perspective no specific analysis is required for damaged fuel under normal conditions. However, a generic shielding evaluation was previously performed for the HI-STORM 100 [5.2.17] to demonstrate that fuel debris under normal or accident conditions, or damaged fuel in a post-accident configuration, will not result in

a significant increase in the dose rates around the 100-ton HI-TRAC. Since the 100-ton HI-TRAC and the HI-TRAC VW are similar in design, the conclusions from the 100-ton HI-TRAC evaluations are also applicable to the HI-TRAC VW.

The scenario analyzed to determine the potential change in dose rate as a result of fuel debris or a damaged fuel assembly collapse in the HI-STORM 100 [5.2.17] feature fuel debris or a damaged fuel assembly that has collapsed (which can have a higher average fuel density than an intact fuel assembly). If the damaged fuel assembly would fully or partially collapse, the fuel density in one portion of the assembly would increase and the density in the other portion of the assembly would decrease. The analysis consisted of modeling the fuel assemblies in the damaged fuel locations in the MPC-24 and MPC-68 with a fuel density that was twice the normal fuel density and correspondingly increasing the source rate for these locations by a factor of two. A flat axial power distribution was used which is approximately representative of the source distribution if the top half of an assembly collapsed into the bottom half of the assembly. Increasing the fuel density over the entire fuel length, rather than in the top half or bottom half of the fuel assembly, is conservative and provides the dose rate change in both the top and bottom portion of the cask.

The results for the MPC-24 and MPC-68 calculations [5.2.17] show that the potential effect on the dose rate is not very significant for the storage of damaged fuel and/or fuel debris. This conclusion is further reinforced by the fact that the majority of the significantly damaged fuel assemblies in the spent fuel inventories are older assemblies from the earlier days of nuclear plant operations. Therefore, these assemblies will have a considerably lower burnup and longer cooling times than the assemblies analyzed in this chapter. In addition, since the dose rate change is not significant for the 100-ton HI-TRAC, the dose rate change will not be significant for the HI-TRAC VW or the HI-STORM FW overpacks.

5.4.3 Site Boundary Evaluation

NUREG-1536 [5.2.1] states that detailed calculations need not be presented since SAR Chapter 12 assigns ultimate compliance responsibilities to the site licensee. Therefore, this subsection describes, by example, the general methodology for performing site boundary dose calculations. The site-specific fuel characteristics, burnup, cooling time, and the site characteristics would be factored into the evaluation performed by the licensee.

The methodology of calculating the dose from a single HI-STORM overpack loaded with an MPC and various arrays of loaded HI-STORMs at distances equal to and greater than 100 meters is described in the HI-STORM 100 FSAR [5.2.17]. A back row factor of 0.20 was calculated in [5.2.17], and utilized herein to calculate dose value C below, based on the results that the dose from the side of the back row of casks is approximately 16 % of the total dose.

The representative annual dose, assuming 100% occupancy (8760 hours), at 300 meters from a single HI-STORM FW cask is presented in Table 5.4.6.

The annual dose, assuming 8760 hour occupancy, at distance from an array of casks was calculated in three steps.

1. The annual dose from the radiation leaving the side of the HI-STORM FW overpack was calculated at the distance desired. Dose value = A.

2. The annual dose from the radiation leaving the top of the HI-STORM FW overpack was calculated at the distance desired. Dose value = B.

3. The annual dose from the radiation leaving the side of a HI-STORM FW overpack, when it is behind another cask, was calculated at the distance desired. The casks have an assumed 15-foot pitch. Dose value = C.

The doses calculated in the steps above are listed in Table 5.4.7. Using these values, the annual dose (at the center of the long side) from an arbitrary 2 by Z array of HI-STORM FW overpacks can easily be calculated. The following formula describes the method.

Z = number of casks along long side

Dose = ZA + 2ZB + ZC

The results for various typical arrays of HI-STORM overpacks can be found in Section 5.1. While the off-site dose analyses were performed for typical arrays of casks containing design basis fuel, compliance with the requirements of 10CFR72.104(a) can only be demonstrated on a site-specific basis, as stated earlier. Therefore, a site-specific evaluation of dose at the controlled area boundary must be performed for each ISFSI in accordance with 10CFR72.212. The site-specific evaluation will consider the site-specific characteristics (such as exposure duration and the number of casks deployed), dose from other portions of the facility and the specifics of the fuel being stored (burnup and cooling time).

5.4.4 Non-Fuel Hardware

As discussed in Subsection 5.2.3, non-fuel hardware in the form of BPRAs, TPDs, CRAs, and APSRs are permitted for storage, integral with a PWR fuel assembly, in the HI-STORM FW system. Since each device occupies the same location within an assembly, only one device will be present in a given assembly. ITTRs, which are installed after core discharge and do not contain radioactive material, may also be stored in the assembly. BPRAs, TPDs and ITTRs are authorized for unrestricted storage in an MPC. The permissible locations of the CRAs and APSRs are shown in Figure 2.1.5.

Table 5.4.8 provides the dose rates at various locations on the surface and one meter from the HI-TRAC VW due to the BPRAs and TPDs for the MPC-37. The results in Table 5.4.8 show that the BPRAs essentially bound TPDs. All dose rates with NFH in this chapter therefore

assume BPRA in every assembly. Note that, even for calculations without NFH, the dose from the active region conservatively contains the contribution of the BPRA. This mainly affects dose location 1 and 2, and results for these locations are therefore identical in most tables, and don't show the dose rate difference indicated in Table 5.4.8.

The analyses in this chapter that consider presence of BPRAs assume that a full-length rod with burnable poison is present in all principal locations. In reality, many BPRAs contain full-length poison rods in some locations, and thimble rodlets in others. The burnup and cooling time combinations listed in Table 2.1.25 of HI-STORM 100 FSAR [5.2.17] for BPRAs and TPDs were selected to ensure the Co-60 activity of those devices is below the value of 895 Ci (BPRA) and 50 Ci (TPD) for the minimum cooling time of 3 years. The burnup and cooling time combinations listed in Table 2.II.1.2 of HI-STORM 100 FSAR [5.2.17] for BPRAs and TPDs were selected to ensure the Co-60 activity of those devices is below the value of 2120 Ci (BPRA) and 238 Ci (TPD) for the minimum cooling time reduced to 1 year. These activities are used in the dose evaluations presented in this chapter. Apart from the total activity, the axial distribution of the material in those devices is important for the dose rates. This axial distribution is shown in Table 5.2.15 (masses) and 5.2.16 (activities). It can be observed from Table 5.2.16, while TPDs have a lower overall activity, their activity in the gas plenum region of the assembly is higher compared to that of the BPRAs. These activities were used to calculate the dose rates in Table 5.4.8. The results in this table show that the maximum dose effect for BPRAs is at the side of the cask, while the maximum dose effect of TPDs is near and on the top of the cask. Nevertheless, Table 5.4.8 demonstrates that even near and on the top of the cask, the TPD doses are bounded by the BPRA doses. It is to be noted that BPRAs with several thimble plugs may result higher dose rate near and on the top of the cask than that reported in Table 5.4.8. However, the potential local increase in dose near and on the top of the cask due the presence of several thimble plug rodlets instead of full length BPRA rods would be more than compensated by the reduction of the dose from the side of the cask at larger distances. Therefore, using BPRAs with all burnable poison rods in the analyses that demonstrate compliance with the site boundary dose limits would be bounding, and hence the burnup and cooling time combinations for BPRAs in Tables 2.1.25 and 2.II.1.2 of the HI-STORM 100 FSAR [5.2.17] are conservative.

Two different configurations were analyzed for CRAs and three different configurations were analyzed for APSRs in the HI-STORM FSAR [5.2.17]. The dose rate due to CRAs and APSRs was explicitly calculated for dose locations around the HI-TRAC and results were provided for the different configurations of CRAs and APSRs, respectively, in the MPCs. These results indicate the dose rate on the radial surfaces of the overpack due to the storage of these devices is less than the dose rate from BPRAs (the increase in dose rate on the radial surface due to CRAs and APSRs are virtually negligible). For the surface dose rate at the bottom, the value for the CRA is comparable to or higher than the value from the BPRA. The increase in the bottom dose rates due to the presence of CRAs is on the order of 10-15% (based on bounding configuration 1 in [5.2.17]). The dose rate out the top of the overpack is essentially 0. The latter is due to the fact that CRAs and APSRs do not achieve significant activation in the upper portion of the devices due to the manner in which they are utilized during normal reactor operations. In contrast, the

dose rate out the bottom of the overpack is substantial due to these devices. However, these dose rates occur in an area (below the pool lid and transfer doors) which is not normally occupied.

The effect of TPDs with the lower cooling time of 1 year as well as CRAs and APSRs with the lower cooling time of 2 years, independent of the burnup, was analyzed in the HI-STORM FSAR [5.2.17]. The results in Table 5.II.4.7 of [5.2.17] show that most of the increased Co-60 activities are well bounded by the activity increase of BPRA with 1 year cooling time, which is used in the dose rate calculations. The activity increase for CRAs and APSRs is higher, but the dose rates on the radial surface and at a distance from the overpack due to the storage of these devices is at least 16 times less than the dose rate from BPRAs, and the dose rate out the top of the overpack is essentially 0. Hence the Co-60 activity of BPRA with 1 year cooling time is considered bounding and used in the dose rate calculations in this chapter.

While the evaluations described above are based on conservative assumptions, the conclusions can vary slightly depending on the number of CRAs and their operating conditions.

5.4.5 Effect of Uncertainties

The design basis calculations presented in this chapter are based on a range of conservative assumptions, but do not explicitly account for uncertainties in the methodologies, codes and input parameters, that is, it is assumed that the effect of uncertainties is small compared to the numerous conservatisms in the analyses. To show that this assumption is valid, calculations have previously been performed as “best estimate” calculations and with estimated uncertainties added [5.4.9]. In all scenarios considered (e.g., evaluation of conservatisms in modeling assumptions, uncertainties associated with MCNP as well as the depletion analysis (including input parameters), etc.), the total dose rates long with uncertainties are comparable to, or lower than, the corresponding values from the design basis calculations. This provides further confirmation that the design basis calculations are reasonable and conservative.

5.4.6 MPC-32ML Loading Pattern Dose Rates

The dose rates provided in Tables 5.1.11 and 5.1.12 are the maximum dose rates for HI-STORM FW with MPC-32ML for conservative loading patterns in Table 5.0.5. Table 5.4.19 and Table 5.4.20 provide adjacent and 1-m dose rates for all burnup-enrichment-cooling time combinations from Table 5.0.5.

The distance dose rates for arrays of HI-STORM FWs with MPC-32ML are provided in Table 5.4.21 for the most bounding loading pattern from Table 5.0.5.

The dose rates provided in Table 5.1.13 are the maximum dose rates for HI-TRAC VW with MPC-32ML for conservative loading patterns in Table 5.0.5. Table 5.4.22 provides adjacent and 1-m dose rates for all burnup-enrichment-cooling time combinations from Table 5.0.5.

Higher concrete density may be used in site specific shielding analysis to further lower the occupational dose rates.

5.4.7 Dose Rate Evaluation for Fuel Assemblies with Irradiated Stainless Steel Replacement Rods

Some fuel assemblies may contain irradiated stainless steel rods. A dose rate evaluation for the HI-STORM FW containing the MPC-37 and the MPC-89 is performed to determine the impact of storing fuel assemblies with irradiated stainless steel replacement rods.

The stainless steel rods are irradiated in the same neutron flux and for the same time period as the design basis PWR and BWR UO_2 fuel rods. As an example, the dose rates at the same locations are evaluated assuming all 37 design basis PWR assemblies contain 4 irradiated stainless steel replacement rods and all 89 design basis BWR assemblies contain 2 irradiated stainless steel replacement rods. The dose rates with the 4 irradiated stainless steel replacement rods in the design basis PWR assembly are approximately 10% higher at the sides and top of the HI-STORM containing the MPC-37. The dose rates with the 2 irradiated stainless steel replacement rods in the design basis BWR assembly are approximately 21% higher at the sides and top of the HI-STORM containing the MPC-89.

Therefore, fuel assemblies containing irradiated stainless steel replacement rods are acceptable for storage and, if present in a fuel assembly, need to be considered in the site specific dose calculations.

5.4.8 Dose Rate Evaluation for BLEU Fuel

From shielding perspective, assemblies containing Blended Low Enriched Uranium (BLEU) fuel material are essentially identical to UO_2 fuel except for the presence of small amount of impurities. A source terms evaluation is performed to determine the impact of impurities in the BLEU fuel material in comparison with the design basis source terms. The results show that only the increased cobalt impurity content in BLEU fuel can have an impact on the fuel gamma source terms. To compensate for increased gamma source terms due to increased cobalt impurity content, additional cooling time is applied to BLEU fuel (see Table 2.1.10) to maintain the dose rates below the maximum dose rates provided in this chapter.

Table 5.4.2

MAXIMUM DOSE RATES FOR THE HI-TRAC VW FOR THE FULLY FLOODED MPC CONDITION WITH AN EMPTY NEUTRON SHIELD

MPC-37 DESIGN BASIS ZIRCALOY CLAD FUEL

REGIONALIZED LOADING BASED ON FIGURES 1.2.3 THROUGH 1.2.5

Dose Point Location	Fuel Gammas (mrem/hr)	(n,γ) Gammas (mrem/hr)	^{60}Co Gammas (mrem/hr)	Neutrons (mrem/hr)	Totals (mrem/hr)	Totals with BPRAs (mrem/hr)
ADJACENT TO THE HI-TRAC VW						
1	804.4	<0.1	422.8	17.3	1244.6	1524.0
2	2627.9	0.7	<0.1	131.4	2760.1	3678.7
3	8.7	<0.1	129.2	2.8	140.7	313.6
4	26.9	<0.1	201.3	0.2	228.5	534.2
5 (bottom lid)	460.4	0.2	1509.1	70.4	2040.1	2189.5
ONE METER FROM THE HI-TRAC VW						
1	525.3	0.1	40.8	28.2	594.5	795.4
2	1170.7	0.3	3.5	60.3	1234.8	1700.3
3	133.8	<0.1	54.7	9.5	198.1	330.3
4	14.7	<0.1	128.0	0.2	142.9	314.9
5	388.8	<0.1	982.9	15.4	1387.2	1473.9

Notes:

- Refer to Figure 5.1.2 for dose point locations.
- MPC internal water level is 5 inches below the MPC lid.
- The "Fuel Gammas" category includes gammas from the spent fuel and ^{60}Co from the spacer grids.
- ^{60}Co activities from BPRA at 1 year cooling are used.

Table 5.4.3

MAXIMUM DOSE RATES FOR THE HI-TRAC VW FOR THE FULLY FLOODED MPC CONDITION WITH A FULL NEUTRON SHIELD

MPC-37 DESIGN BASIS ZIRCALOY CLAD FUEL

REGIONALIZED LOADING BASED ON FIGURES 1.2.3 THROUGH 1.2.5

Dose Point Location	Fuel Gammas (mrem/hr)	(n,γ) Gammas (mrem/hr)	^{60}Co Gammas (mrem/hr)	Neutrons (mrem/hr)	Totals (mrem/hr)	Totals with BPRAs (mrem/hr)
ADJACENT TO THE HI-TRAC VW						
1	513.4	0.1	254.2	0.7	768.5	932.6
2	1684.2	0.2	<0.1	1.1	1685.4	2218.2
3	3.5	<0.1	69.7	<0.1	73.3	165.7
4	26.9	<0.1	201.3	0.2	228.4	534.1
5 (bottom lid)	459.9	0.2	1508.9	70.2	2039.2	2188.0
ONE METER FROM THE HI-TRAC VW						
1	334.3	<0.1	22.1	0.2	356.6	467.8
2	737.4	<0.1	2.0	0.4	739.9	1002.1
3	85.5	<0.1	23.4	0.2	109.0	182.3
4	14.7	<0.1	128.0	<0.1	142.8	314.8
5	388.4	<0.1	982.9	14.9	1386.3	1472.8

Notes:

- Refer to Figure 5.1.2 for dose point locations.
- MPC internal water level is 5 inches below the MPC lid.
- The "Fuel Gammas" category includes gammas from the spent fuel and ^{60}Co from the spacer grids.
- ^{60}Co activities from BPRA at 1 year cooling are used.

Table 5.4.4a

MAXIMUM DOSE RATES FOR THE HI-TRAC VW FOR THE FULLY FLOODED MPC CONDITION WITH AN EMPTY NEUTRON SHIELD

MPC-89 DESIGN BASIS ZIRCALOY CLAD FUEL
REGIONALIZED LOADING BASED ON FIGURE 1.2.6

Dose Point Location	Fuel Gammas (mrem/hr)	(n,γ) Gammas (mrem/hr)	^{60}Co Gammas (mrem/hr)	Neutrons (mrem/hr)	Totals (mrem/hr)
ADJACENT TO THE HI-TRAC VW					
1	350.5	0.2	1372.9	27.0	1750.6
2	4084.7	2.3	<0.1	397.0	4484.0
3	2.1	<0.1	370.0	2.8	375.0
4	4.7	<0.1	201.0	<0.1	205.8
5 (bottom lid)	76.5	<0.1	1366.8	4.1	1447.4
ONE METER FROM THE HI-TRAC VW					
1	637.9	0.2	140.2	29.9	808.3
2	1895.9	0.4	11.8	83.3	1991.5
3	154.9	0.1	143.4	18.7	317.1
4	2.5	<0.1	146.8	0.1	149.4
5	63.9	<0.1	971.4	2.5	1037.8

Notes:

- Refer to Figure 5.1.2 for dose point locations.
- MPC internal water level is 5 inches below the MPC lid.
- The "Fuel Gammas" category includes gammas from the spent fuel and ^{60}Co from the spacer grids.

Table 5.4.4b

MAXIMUM DOSE RATES FOR THE HI-TRAC VW FOR THE FULLY FLOODED MPC CONDITION WITH AN EMPTY NEUTRON SHIELD

MPC-89 DESIGN BASIS ZIRCALOY CLAD FUEL
REGIONALIZED LOADING BASED ON FIGURE 1.2.7

Dose Point Location	Fuel Gammas (mrem/hr)	(n,γ) Gammas (mrem/hr)	^{60}Co Gammas (mrem/hr)	Neutrons (mrem/hr)	Totals (mrem/hr)
ADJACENT TO THE HI-TRAC VW					
1	373.8	0.3	1489.0	53.0	1916.2
2	4846.4	2.1	<0.1	364.6	5213.1
3	2.4	<0.1	403.4	3.4	409.2
4	4.4	<0.1	220.4	<0.1	224.9
5 (bottom lid)	84.1	<0.1	1484.3	7.9	1576.3
ONE METER FROM THE HI-TRAC VW					
1	756.5	0.3	147.5	41.5	945.7
2	2232.2	0.6	9.7	117.6	2360.1
3	174.0	0.2	159.6	24.1	357.9
4	3.1	<0.1	158.3	0.1	161.5
5	64.0	<0.1	1053.6	3.8	1121.5

Notes:

- Refer to Figure 5.1.2 for dose point locations.
- MPC internal water level is 5 inches below the MPC lid.
- The "Fuel Gammas" category includes gammas from the spent fuel and ^{60}Co from the spacer grids.

Table 5.4.5a

MAXIMUM DOSE RATES FOR THE HI-TRAC VW FOR THE FULLY FLOODED MPC CONDITION WITH A FULL NEUTRON SHIELD

MPC-89 DESIGN BASIS ZIRCALOY CLAD FUEL

REGIONALIZED LOADING BASED ON FIGURE 1.2.6

Dose Point Location	Fuel Gammas (mrem/hr)	(n,γ) Gammas (mrem/hr)	^{60}Co Gammas (mrem/hr)	Neutrons (mrem/hr)	Totals (mrem/hr)
ADJACENT TO THE HI-TRAC VW					
1	205.2	0.3	851.4	1.4	1058.3
2	2602.2	0.8	<0.1	4.0	2606.9
3	0.6	<0.1	202.8	<0.1	203.5
4	4.7	<0.1	201.0	<0.1	205.8
5 (bottom lid)	76.5	<0.1	1366.9	4.2	1447.6
ONE METER FROM THE HI-TRAC VW					
1	397.3	<0.1	83.4	0.4	481.3
2	1179.3	0.2	4.5	1.4	1185.5
3	89.4	0.2	84.3	0.8	174.8
4	2.5	<0.1	146.8	<0.1	149.3
5	64.0	<0.1	971.3	2.3	1037.5

Notes:

- Refer to Figure 5.1.2 for dose point locations.
- MPC internal water level is 5 inches below the MPC lid.
- The "Fuel Gammas" category includes gammas from the spent fuel and ^{60}Co from the spacer grids.

Table 5.4.5b

MAXIMUM DOSE RATES FOR THE HI-TRAC VW FOR THE FULLY FLOODED MPC CONDITION WITH A FULL NEUTRON SHIELD

MPC-89 DESIGN BASIS ZIRCALOY CLAD FUEL

REGIONALIZED LOADING BASED ON FIGURE 1.2.7

Dose Point Location	Fuel Gammas (mrem/hr)	(n,γ) Gammas (mrem/hr)	^{60}Co Gammas (mrem/hr)	Neutrons (mrem/hr)	Totals (mrem/hr)
ADJACENT TO THE HI-TRAC VW					
1	215.1	0.6	922.7	2.7	1141.1
2	3039.2	1.1	<0.1	6.0	3046.3
3	1.1	<0.1	220.8	<0.1	221.9
4	4.4	<0.1	220.4	<0.1	224.8
5 (bottom lid)	84.2	<0.1	1484.0	8.2	1576.5
ONE METER FROM THE HI-TRAC VW					
1	465.7	0.1	82.3	0.7	548.8
2	1394.8	0.3	4.8	2.1	1401.9
3	122.4	0.1	76.8	0.5	199.8
4	3.1	<0.1	158.3	<0.1	161.4
5	64.0	<0.1	1053.5	3.4	1121.0

Notes:

- Refer to Figure 5.1.2 for dose point locations.
- MPC internal water level is 5 inches below the MPC lid.
- The "Fuel Gammas" category includes gammas from the spent fuel and ^{60}Co from the spacer grids.

Table 5.4.6 ANNUAL DOSE AT 300 METERS FROM A SINGLE HI-STORM FW OVERPACK WITH THE XL LID DESIGN CONTAINING AN MPC-37 WITH DESIGN BASIS ZIRCALOY CLAD FUEL FOR REPRESENTATIVE BURNUP AND COOLING TIME COMBINATION	
Dose Component	**45,000 MWD/MTU 4.5-Year Cooling (mrem/yr)**
Fuel gammas	16.35
^{60}Co Gammas	1.11
Neutrons	0.25
Total	17.7

Notes:

- Gammas generated by neutron capture are included with fuel gammas.
- The Co-60 gammas include BPRAs at 3 years cooling.
- The "Fuel Gammas" category includes gammas from the spent fuel, ^{60}Co from the spacer grids, and ^{60}Co from the BPRAs in the active fuel region.

Table 5.4.7

DOSE VALUES USED IN CALCULATING ANNUAL DOSE FROM VARIOUS HI-STORM FW ISFSI CONFIGURATIONS WITH THE XL LID DESIGN 45,000 MWD/MTU AND 4.5-YEAR COOLING ZIRCALOY CLAD FUEL (REPRESENTATIVE BURNUP AND COOLING TIME COMBINATION)

Distance	**A Side of Overpack (mrem/yr)**	**B Top of Overpack (mrem/yr)**	**C Side of Shielded Overpack (mrem/yr)**
100 meters	396.8	44.1	79.4
200 meters	60.9	6.8	12.2
300 meters	15.9	1.8	3.2
400 meters	5.2	0.6	1.0
500 meters	1.9	0.2	0.4
600 meters	0.8	0.1	0.2

Notes:

- 8760 hour annual occupancy is assumed.
- ^{60}Co activities from BPRA at 3 years cooling are used.

Table 5.4.8 DOSE RATES DUE TO BPRAs AND TPDs FROM THE HI-TRAC VW FOR NORMAL CONDITIONS (3 YEARS OF COOLING)		
Dose Point Location	**BPRAs (mrem/hr)**	**TPDs (mrem/hr)**
ADJACENT TO THE HI-TRAC VW		
1	159.09	0.0
2	509.04	0.0
3	192.78	165.31
4	304.15	275.53
5	137.27	0.0
ONE METER FROM THE HI-TRAC VW		
1	122.06	0.40
2	240.70	3.10
3	128.50	86.95
4	174.25	153.49
5	63.13	0.0

Notes:

- Refer to Figure 5.1.2 for dose locations.
- Dose rates are based on no water within the MPC, an empty annulus, and a water jacket full of water. For the majority of the duration that the HI-TRAC bottom lid is installed, the MPC cavity will be flooded with water. The water within the MPC greatly reduces the dose rate
- Includes the BPRAs from both the active and non-active region.

Table 5.4.9

REPRESENTATIVE FUEL BURNUP, COOLING TIME AND ENRICHMENT FOR NORMAL CONDITIONS

Representative Burnup and Cooling Times Uniform Loading	
MPC-37	**MPC-89**
45,000 MWD/MTU 4.5 Year Cooling 3.6 wt% U-235 Enrichment	45,000 MWD/MTU 5 Year Cooling 3.2 wt% U-235 Enrichment

Table 5.4.10

Table Deleted

Table 5.4.11

DOSE RATES ADJACENT TO HI-STORM FW OVERPACK WITH THE STANDARD LID DESIGN
FOR NORMAL CONDITIONS
MPC-37
BURNUP AND COOLING TIME
45,000 MWD/MTU AND 4.5-YEAR COOLING
(REPRESENTATIVE BURNUP AND COOLING TIME COMBINATION)

Dose Point Location	Fuel Gammas (mrem/hr)	(n,γ) Gammas (mrem/hr)	^{60}Co Gammas (mrem/hr)	Neutrons (mrem/hr)	Totals (mrem/hr)	Totals with BPRAs (mrem/hr)
1	273	2	14	4	292	292
2	135	1	<1	1	141	141
3 (surface)	11	1	25	2	39	53
3 (overpack edge)	13	<1	63	1	78	113
4 (center)	<1	1	<1	<1	<4	<4
4 (mid)	1	1	4	1	7	10
4 (outer)	10	<1	30	<1	42	59

Notes:

- Refer to Figure 5.1.1 for dose locations.
- Values are rounded to nearest integer where appropriate.
- Dose location 3 (surface) is at the surface of the outlet vent. Dose location 3 (overpack edge) is in front of the outlet vent, but located radially above the overpack outer diameter.
- Dose location 4 (center) is at the center of the top surface of the top lid. Dose location 4 (mid) is situated directly above the vertical section of the outlet vent. Dose location 4 (outer) is extended along the top plane of the top lid, located radially above the overpack outer diameter.
- The "Fuel Gammas" category includes gammas from the spent fuel, ^{60}Co from the spacer grids, and ^{60}Co from the BPRAs in the active fuel region.
- ^{60}Co activities from BPRA at 3 years cooling are used.

Table 5.4.12

DOSE RATES ADJACENT TO HI-STORM FW OVERPACK WITH THE STANDARD LID DESIGN
FOR NORMAL CONDITIONS
MPC-89
BURNUP AND COOLING TIME
45,000 MWD/MTU AND 5-YEAR COOLING
(REPRESENTATIVE BURNUP AND COOLING TIME COMBINATION)

Dose Point Location	**Fuel Gammas (mrem/hr)**	**(n,γ) Gammas (mrem/hr)**	**^{60}Co Gammas (mrem/hr)**	**Neutrons (mrem/hr)**	**Totals (mrem/hr)**
1	172	2	31	3	208
2	92	2	<1	1	96
3 (surface)	3	<1	29	2	35
3 (overpack edge)	5	<1	69	<1	76
4 (center)	0.1	0.4	0.4	0.1	1
4 (mid)	0.2	0.5	4.3	0.5	6
4 (outer)	2	<1	33	<1	37

Notes:

- Refer to Figure 5.1.1 for dose locations.
- Values are rounded to nearest integer where appropriate.
- Dose location 3 (surface) is at the surface of the outlet vent. Dose location 3 (overpack edge) is in front of the outlet vent, but located radially above the overpack outer diameter.
- Dose location 4 (center) is at the center of the top surface of the top lid. Dose location 4 (mid) is situated directly above the vertical section of the outlet vent. Dose location 4 (outer) is extended along the top plane of the top lid, located radially above the overpack outer diameter.
- The "Fuel Gammas" category includes gammas from the spent fuel and ^{60}Co from the spacer grids.

Table 5.4.13

DOSE RATES AT ONE METER FROM HI-STORM FW OVERPACK WITH THE STANDARD LID DESIGN
FOR NORMAL CONDITIONS
MPC-37
BURNUP AND COOLING TIME
45,000 MWD/MTU AND 4.5-YEAR COOLING
(REPRESENTATIVE BURNUP AND COOLING TIME COMBINATION)

Dose Point Location	Fuel Gammas (mrem/hr)	(n,γ) Gammas (mrem/hr)	^{60}Co Gammas (mrem/hr)	Neutrons (mrem/hr)	Totals (mrem/hr)	Totals with BPRAs (mrem/hr)
1	57	1	4	1	62	62
2	75	1	1	1	77	78
3	6	<1	5	<1	13	15
4 (center)	0.6	0.3	1.0	0.2	2.1	2.7

Notes:

- Refer to Figure 5.1.1 for dose locations.
- Values are rounded to nearest integer where appropriate.
- The "Fuel Gammas" category includes gammas from the spent fuel, ^{60}Co from the spacer grids, and ^{60}Co from the BPRAs in the active fuel region.
- ^{60}Co activities from BPRA at 3 years cooling are used.

Table 5.4.14

DOSE RATES AT ONE METER FROM HI-STORM FW OVERPACK WITH THE STANDARD LID DESIGN
FOR NORMAL CONDITIONS
MPC-89
BURNUP AND COOLING TIME
45,000 MWD/MTU AND 5-YEAR COOLING
(REPRESENTATIVE BURNUP AND COOLING TIME COMBINATION)

Dose Point Location	**Fuel Gammas (mrem/hr)**	**(n,γ) Gammas (mrem/hr)**	**^{60}Co Gammas (mrem/hr)**	**Neutrons (mrem/hr)**	**Totals (mrem/hr)**
1	38	<1	7	<1	47
2	47	<1	<1	<1	50
3	3	<1	5	<1	10
4 (center)	0.2	0.2	1	0.1	2

Notes:

- Refer to Figure 5.1.1 for dose locations.
- Values are rounded to nearest integer where appropriate.
- The "Fuel Gammas" category includes gammas from the spent fuel and ^{60}Co from the spacer girds.

Table 5.4.15

DOSE RATES FROM THE HI-TRAC VW FOR NORMAL CONDITIONS
MPC-37 DESIGN BASIS FUEL
45,000 MWD/MTU AND 4.5-YEAR COOLING
(REPRESENTATIVE BURNUP AND COOLING TIME COMBINATION)

Dose Point Location	Fuel Gammas (mrem/hr)	(n,γ) Gammas (mrem/hr)	^{60}Co Gammas (mrem/hr)	Neutrons (mrem/hr)	Totals (mrem/hr)	Totals with BPRAs (mrem/hr)
ADJACENT TO THE HI-TRAC VW						
1	975	25	808	67	1874	1874
2	2939	75	<1	154	3169	3169
3	20	5	339	6	371	561
4	98	1	530	225	854	1147
5	940	3	2074	1022	4038	4038
ONE METER FROM THE HI-TRAC VW						
1	695	12	99	30	835	835
2	1382	22	10	58	1472	1474
3	268	6	142	9	425	501
4	80	<1	295	73	449	613
5	470	1	1129	297	1897	1897

Notes:

- Refer to Figure 5.1.2 for dose locations.
- Values are rounded to nearest integer.
- Dose rates are based on no water within the MPC, an empty annulus, and a water jacket full of water. For the majority of the duration that the HI-TRAC bottom lid is installed, the MPC cavity will be flooded with water. The water within the MPC greatly reduces the dose rate.
- Streaming may occur through the annulus. However, during handling/operations the annulus is filled with water and lead snakes are typically present to reduce the streaming effects. Further, operators are not present on top of the transfer cask.
- The "Fuel Gammas" category includes gammas from the spent fuel, ^{60}Co from the spacer grids, and ^{60}Co from the BPRAs in the active fuel region.
- ^{60}Co activities from BPRA at 3 years cooling are used.

Table 5.4.16

DOSE RATES FROM THE HI-TRAC VW FOR NORMAL CONDITIONS
MPC-89 DESIGN BASIS FUEL
45,000 MWD/MTU AND 5-YEAR COOLING
(REPRESENTATIVE BURNUP AND COOLING TIME COMBINATION)

Dose Point Location	Fuel Gammas (mrem/hr)	(n,γ) Gammas (mrem/hr)	^{60}Co Gammas (mrem/hr)	Neutrons (mrem/hr)	Totals (mrem/hr)
ADJACENT TO THE HI-TRAC VW					
1	244	18	2247	40	2549
2	2466	107	<1	219	2793
3	3	3	581	4	591
4	25	<1	505	138	669
5	132	2	2135	720	2989
ONE METER FROM THE HI-TRAC VW					
1	411	13	291	29	744
2	1142	30	21	74	1267
3	119	5	280	8	412
4	16	<1	300	43	360
5	79	<1	1202	202	1484

Notes:

- Refer to Figure 5.1.2 for dose locations.
- Values are rounded to nearest integer.
- Dose rates are based on no water within the MPC, an empty annulus, and a water jacket full of water. For the majority of the duration that the HI-TRAC bottom lid is installed, the MPC cavity will be flooded with water. The water within the MPC greatly reduces the dose rate.
- Streaming may occur through the annulus. However, during handling/operations the annulus is filled with water and lead snakes are typically present to reduce the streaming effects. Further, operators are not present on top of the transfer cask.
- The "Fuel Gammas" category includes gammas from the spent fuel and ^{60}Co from the spacer grids.

Table 5.4.17

DOSE RATES FOR THE HI-TRAC VW VERSION V2 FOR THE FULLY FLOODED MPC AND FLOODED ANNULUS CONDITION WITHOUT NEUTRON SHIELD CYLINDER PRESENT, BASED ON FIGURE 1.2.7

MPC-89 DESIGN BASIS ZIRCALOY CLAD FUEL

Dose Point Location	Fuel Gammas (mrem/hr)	(n,γ) Gammas (mrem/hr)	^{60}Co Gammas (mrem/hr)	Neutrons (mrem/hr)	Totals (mrem/hr)
ADJACENT TO THE HI-TRAC VW VERSION V2					
1	277.3	<1	3383.0	14.7	3675.1
2	4890.2	2.1	<1	227.7	5120.1
3	1.2	<1	331.3	<1	332.5
4	4.3	<1	253.8	<1	258.1
5 (bottom lid)	92.1	<1	1486.5	8.9	1587.5
ONE METER FROM THE HI-TRAC VW VERSION V2					
1	1175.5	<1	209.3	15.6	1400.6
2	2274.8	<1	9.7	31.8	2316.7
3	91.7	<1	106.4	6.3	204.5
4	3.1	<1	210.6	<1	213.8
5	65.9	<1	1060.2	3.3	1129.4

Notes:

- Refer to Figure 5.1.2 for dose point locations.
- MPC internal water level is 5 inches below the MPC lid.
- Annulus water level is 2 inches above bottom surface of the MPC lid.
- The "Fuel Gammas" category includes gammas from the spent fuel and ^{60}Co from the spacer grids.

Table 5.4.18

DOSE RATES FOR THE HI-TRAC VW VERSION V2 FOR THE FULLY FLOODED MPC AND FLOODED ANNULUS WITH NEUTRON SHIELD CYLINDER PRESENT, BASED ON FIGURE 1.2.7

MPC-89 DESIGN BASIS ZIRCALOY CLAD FUEL

Dose Point Location	**Fuel Gammas (mrem/hr)**	**(n,γ) Gammas (mrem/hr)**	**^{60}Co Gammas (mrem/hr)**	**Neutrons (mrem/hr)**	**Totals (mrem/hr)**
ADJACENT TO THE HI-TRAC VW VERSION V2					
1	169.6	<1	2058.4	2.0	2230.0
1*	22.0	<1	255.1	1.3	278.4
2	678.2	<1	<1	2.7	681.0
3	<1	<1	41.4	<1	41.7
4	4.3	<1	253.4	<1	257.8
5 (bottom lid)	91.1	<1	1485.9	8.8	1585.9
ONE METER FROM THE HI-TRAC VW VERSION V2					
1	165.6	<1	21.2	<1	187.2
1*	164.8	<1	16.1	<1	181.4
2	320.9	<1	1.0	<1	322.9
3	15.4	<1	10.8	<1	26.3
4	3.1	<1	210.5	<1	213.6
5	66.2	<1	1060.2	3.4	1129.8

Notes:

* Location 1* uses a steel shield ring pedestal for the Neutron Shield Cylinder, which may be present for ALARA purposes. The critical shielding dimensions of the optional steel shield ring pedestal are as follows: Outer Diameter is 8 feet; radial thickness is 2.5 inches; Axial bottom of shield ring is 3 inches below MPC baseplate bottom surface; top of shield ring is in contact with Neutron Shield Cylinder.

- Refer to Figure 5.1.2 for dose point locations.
- MPC internal water level is 5 inches below the MPC lid.
- Annulus water level is 2 inches above bottom surface of the MPC lid.
- The "Fuel Gammas" category includes gammas from the spent fuel and ^{60}Co from the spacer grids.

Table 5.4.19

ADJACENT DOSE RATES FOR HI-STORM FW WITH MPC-32ML WITH 16X16D FUEL BURNUP-COOLING TIME COMBINATIONS (SEE TABLE 5.0.5 FOR LOADING PATTERNS)

Dose Point Location	**Totals + BPRA (mrem/hr)**					
	15,000 MWD/MTU 3-Year Cooling	**20,000 MWD/MTU 3-Year Cooling**	**25,000 MWD/MTU 3.5-Year Cooling**	**30,000 MWD/MTU 3.6-Year Cooling**	**35,000 MWD/MTU 4-Year Cooling**	**40,000 MWD/MTU 4.5-Year Cooling**
1	219	279	260	280	271	262
2	138	173	152	163	151	139
3 (surface)	34	42	41	44	44	45
3 (overpack edge)	66	77	74	77	75	75
4 (center)	1	1	1	1	1	1
4 (mid)	4	5	5	6	6	6
4 (outer)	36	43	41	43	42	42

Notes:

- Refer to Figure 5.1.1 for dose locations.
- Values are rounded to nearest integer where appropriate.
- Dose location 3 (surface) is at the surface of the outlet vent. Dose location 3 (overpack edge) is in front of the outlet vent, but located radially above the overpack outer diameter.
- Dose location 4 (center) is at the center of the top surface of the top lid. Dose location 4 (mid) is situated directly above the vertical section of the outlet vent. Dose location 4 (outer) is extended along the top plane of the top lid, located radially above the overpack outer diameter.
- ^{60}Co activities from BPRA at 3 years cooling are used.

Table 5.4.19 (continued)

ADJACENT DOSE RATES FOR HI-STORM FW WITH MPC-32ML WITH 16X16D FUEL BURNUP-COOLING TIME COMBINATIONS (SEE TABLE 5.0.5 FOR LOADING PATTERNS)

Dose Point Location	**Totals + BPRA (mrem/hr)**					
	45,000 MWD/MTU 5-Year Cooling	**50,000 MWD/MTU 6-Year Cooling**	**55,000 MWD/MTU 7-Year Cooling**	**60,000 MWD/MTU 9-Year Cooling**	**65,000 MWD/MTU 11-Year Cooling**	**70,000 MWD/MTU 13-Year Cooling**
1	250	219	197	162	136	118
2	129	109	97	80	70	63
3 (surface)	44	41	40	36	33	31
3 (overpack edge)	73	69	65	58	52	47
4 (center)	1	1	2	2	2	2
4 (mid)	6	5	5	5	4	4
4 (outer)	41	38	36	32	28	26

Notes:

- Refer to Figure 5.1.1 for dose locations.
- Values are rounded to nearest integer where appropriate.
- Dose location 3 (surface) is at the surface of the outlet vent. Dose location 3 (overpack edge) is in front of the outlet vent, but located radially above the overpack outer diameter.
- Dose location 4 (center) is at the center of the top surface of the top lid. Dose location 4 (mid) is situated directly above the vertical section of the outlet vent. Dose location 4 (outer) is extended along the top plane of the top lid, located radially above the overpack outer diameter.
- ^{60}Co activities from BPRA at 3 years cooling are used.

Table 5.4.20

1-METER DOSE RATES FOR HI-STORM FW WITH MPC-32ML WITH 16X16D FUEL BURNUP-COOLING TIME COMBINATIONS (SEE TABLE 5.0.5 FOR LOADING PATTERNS)

Dose Point Location	**Totals + BPRA (mrem/hr)**					
	15,000 MWD/MTU 3-Year Cooling	**20,000 MWD/MTU 3-Year Cooling**	**25,000 MWD/MTU 3.5-Year Cooling**	**30,000 MWD/MTU 3.6-Year Cooling**	**35,000 MWD/MTU 4-Year Cooling**	**40,000 MWD/MTU 4.5-Year Cooling**
1	53	67	60	64	60	57
2	74	93	81	87	81	74
3	17	20	19	20	20	19
4 (center)	2	2	2	2	2	2

Notes:

- Refer to Figure 5.1.1 for dose locations.
- Values are rounded to nearest integer where appropriate.
- ^{60}Co activities from BPRA at 3 years cooling are used.

Table 5.4.20 (continued)

1-METER DOSE RATES FOR HI-STORM FW WITH MPC-32ML WITH 16X16D FUEL BURNUP-COOLING TIME COMBINATIONS (SEE TABLE 5.0.5 FOR LOADING PATTERNS)

Dose Point Location	**Totals + BPRA (mrem/hr)**					
	45,000 MWD/MTU 5-Year Cooling	**50,000 MWD/MTU 6-Year Cooling**	**55,000 MWD/MTU 7-Year Cooling**	**60,000 MWD/MTU 9-Year Cooling**	**65,000 MWD/MTU 11-Year Cooling**	**70,000 MWD/MTU 13-Year Cooling**
1	53	46	41	34	28	25
2	69	58	51	42	36	33
3	19	17	16	14	13	12
4 (center)	2	2	2	2	2	2

Notes:

- Refer to Figure 5.1.1 for dose locations.
- Values are rounded to nearest integer where appropriate.
- ^{60}Co activities from BPRA at 3 years cooling are used.

Table 5.4.21

MAXIMUM DOSE RATES FOR ARRAYS OF HI-STORM FWs WITH MPC-32ML LOADING PATTERNS (SEE TABLE 5.0.5)

Array Configuration	**1 Cask**	**2x2**	**2x3**	**2x4**	**2x5**
HI-STORM FW Overpack					
Annual Dose (mrem/year)	9	22	12	16	20
Distance to Controlled Area Boundary (meters)	400	400	500	500	500

Table 5.4.22
DOSE RATES FOR HI-TRAC VW WITH MPC-32ML WITH SELECTED 16X16D FUEL BURNUP-COOLING TIME COMBINATIONS

Dose Point Location	**Totals + BPRA (mrem/hr)**					
	15,000 MWD/MTU 3-Year Cooling	**20,000 MWD/MTU 3-Year Cooling**	**25,000 MWD/MTU 3.5-Year Cooling**	**30,000 MWD/MTU 3.6-Year Cooling**	**35,000 MWD/MTU 4-Year Cooling**	**40,000 MWD/MTU 4.5-Year Cooling**
ADJACENT TO THE HI-TRAC VW						
1	61	82	83	92	99	110
2	1306	1666	1518	1654	1597	1553
3	516	598	585	606	602	604
4	641	757	751	795	810	846
5	1850	2389	2354	2539	2591	2719
ONE METER FROM THE HI-TRAC VW						
1	280	355	333	356	348	344
2	587	746	675	732	703	679
3	164	198	187	197	193	191
4	472	574	573	616	624	634
5	957	1223	1197	1278	1289	1329

Notes:

- Refer to Figure 5.1.2 for dose locations.
- Dose rates are based on no water within the MPC, an empty annulus, and a water jacket full of water. For the majority of the duration that the HI-TRAC bottom lid is installed, the MPC cavity will be flooded with water. The water within the MPC greatly reduces the dose rate.
- Streaming may occur through the annulus. However, during handling/operations the annulus is filled with water and lead snakes are typically present to reduce the streaming effects. Further, operators are not present on top of the transfer cask.
- ^{60}Co activities from BPRA at 3 years cooling are used.

Table 5.4.22 (continued)
DOSE RATES FOR HI-TRAC VW WITH MPC-32ML WITH SELECTED 16X16D FUEL BURNUP-COOLING TIME COMBINATIONS

Dose Point Location	Totals + BPRA (mrem/hr)					
	45,000 MWD/MTU 5-Year Cooling	**50,000 MWD/MTU 6-Year Cooling**	**55,000 MWD/MTU 7-Year Cooling**	**60,000 MWD/MTU 9-Year Cooling**	**65,000 MWD/MTU 11-Year Cooling**	**70,000 MWD/MTU 13-Year Cooling**
ADJACENT TO THE HI-TRAC VW						
1	117	121	127	136	135	135
2	1504	1361	1292	1185	1105	1058
3	591	559	531	481	433	395
4	858	852	854	852	821	800
5	2734	2649	2590	2470	2259	2103
ONE METER FROM THE HI-TRAC VW						
1	333	303	283	251	221	199
2	653	587	553	501	464	441
3	186	172	163	149	136	127
4	628	590	560	502	453	418
5	1316	1246	1188	1082	952	853

Notes:

- Refer to Figure 5.1.2 for dose locations.
- Dose rates are based on no water within the MPC, an empty annulus, and a water jacket full of water. For the majority of the duration that the HI-TRAC bottom lid is installed, the MPC cavity will be flooded with water. The water within the MPC greatly reduces the dose rate.
- Streaming may occur through the annulus. However, during handling/operations the annulus is filled with water and lead snakes are typically present to reduce the streaming effects. Further, operators are not present on top of the transfer cask.
- ^{60}Co activities from BPRA at 3 years cooling are used.

5.6 REFERENCES

[5.1.1] LA-UR-03-1987, MCNP — A General Monte Carlo N-Particle Transport Code, Version 5, April 24, 2003 (Revised 10/3/05).

[5.1.2] I.C. Gauld, O.W. Hermann, "SAS2: A Coupled One-Dimensional Depletion and Shielding Analysis Module," ORNL/TM-2005/39, Version 5.1, Vol. I, Book 3, Sect. S2, Oak Ridge National Laboratory, November 2006.

[5.1.3] I.C. Gauld, O.W. Hermann, R.M. Westfall, "ORIGEN-S: SCALE System Module to Calculate Fuel Depletion, Actinide Transmutation, Fission Product Buildup and Decay, and Associated Radiation Source Terms," ORNL/TM-2005/39, Version 5.1, Vol. II, Book 1, Sect. F7, Oak Ridge National Laboratory, November 2006.

[5.1.4] SCALE Manual B.T. Rearden and M.A. Jessee, Eds., SCALE Code System, ORNL/TM-2005/39, Version 6.2.1, Oak Ridge National Laboratory, Oak Ridge, Tennessee (2016). Available from Radiation Safety Information Computational Center as CCC-834.

[5.2.1] NUREG-1536, SRP for Dry Cask Storage Systems, USNRC, Washington, DC, January 1997.

[5.2.2] A.G. Croff, M.A. Bjerke, G.W. Morrison, L.M. Petrie, "Revised Uranium-Plutonium Cycle PWR and BWR Models for the ORIGEN Computer Code," ORNL/TM-6051, Oak Ridge National Laboratory, September 1978.

[5.2.3] A. Luksic, "Spent Fuel Assembly Hardware: Characterization and 10CFR 61 Classification for Waste Disposal," PNL-6906-vol. 1, Pacific Northwest Laboratory, June 1989.

[5.2.4] J.W. Roddy et al., "Physical and Decay Characteristics of Commercial LWR Spent Fuel," ORNL/TM-9591/V1&R1, Oak Ridge National Laboratory, January 1996.

[5.2.5] "Characteristics of Spent Fuel, High Level Waste, and Other Radioactive Wastes Which May Require Long-Term Isolation," DOE/RW-0184, U.S. Department of Energy, December 1987.

[5.2.6] Not Used.

[5.2.7] "Characteristics Database System LWR Assemblies Database," DOE/RW-0184-R1, U.S. Department of Energy, July 1992.

[5.2.8] O. W. Hermann, et al., "Validation of the Scale System for PWR Spent Fuel Isotopic Composition Analyses," ORNL/TM-12667, Oak Ridge National Laboratory, March 1995.

[5.2.9] M. D. DeHart and O. W. Hermann, "An Extension of the Validation of SCALE (SAS2H) Isotopic Predictions for PWR Spent Fuel," ORNL/TM-13317, Oak Ridge National Laboratory, September 1996.

[5.2.10] O. W. Hermann and M. D. DeHart, "Validation of SCALE (SAS2H) Isotopic Predictions for BWR Spent Fuel," ORNL/TM-13315, Oak Ridge National Laboratory, September 1998.

[5.2.11] "Summary Report of SNF Isotopic Comparisons for the Disposal Criticality Analysis Methodology," B00000000-01717-5705-00077 REV 00, CRWMS M&O, September 1997.

[5.2.12] "Isotopic and Criticality Validation of PWR Actinide-Only Burnup Credit," DOE/RW-0497, U.S. Department of Energy, May 1997.

[5.2.13] B. D. Murphy, "Prediction of the Isotopic Composition of UO_2 Fuel from a BWR: Analysis of the DU1 Sample from the Dodewaard Reactor," ORNL/TM-13687, Oak Ridge National Laboratory, October 1998.

[5.2.14] O. W. Hermann, et al., "Technical Support for a Proposed Decay Heat Guide Using SAS2H/ORIGEN-S Data," NUREG/CR-5625, ORNL-6698, Oak Ridge National Laboratory, September 1994.

[5.2.15] C. E. Sanders, I. C. Gauld, "Isotopic Analysis of High-Burnup PWR Spent Fuel Samples from the Takahama-3 Reactor," NUREG/CR-6798, ORNL/TM-2001/259, Oak Ridge National Laboratory, January 2003.

[5.2.16] Not Used.

[5.2.17] HI-2002444, Proposed Rev. 17A, "Final Safety Analysis Report for the HI-STORM 100 Cask System", USNRC Docket 72-1014, Submittal Letter 5014878, submitted on September 16, 2019.

[5.2.18] Safety Analysis Report on the HI-STAR 190 Package, Holtec International Report HI 2146214, Revision 3, USNRC Docket No 71-9373, Washington, DC.

[5.4.1] "American National Standard Neutron and Gamma-Ray Flux-to-Dose Rate Factors", ANSI/ANS-6.1.1-1977.

APPENDIX 5.A

SAMPLE INPUT FILES FOR TRITON, ORIGAMI, SAS2H, ORIGEN-S, AND MCNP

Proprietary Information Withheld in Accordance with 10 CFR 2.390

results of the benchmark calculations are used directly and one where benchmark calculations that result in a k_{eff} greater than 1.0 are conservatively truncated to 1.0000. Consistent with NUREG-1536, the larger of the combined bias and bias uncertainty of the two approaches is used.

- The water reflector above and below the fuel is assumed to be unborated water, even if borated water is used in the fuel region.

- For fuel assemblies that contain low-enriched axial blankets, the governing enrichment is that of the highest planar average, and the blankets are not included in determining the average enrichment.

- Regarding the position of assemblies in the basket, configurations with centered and eccentric positioning of assemblies in the fuel storage locations are considered.

- For undamaged fuel assemblies, as defined in the Glossary, all fuel rod positions are assumed to contain a fuel rod. To qualify assemblies with missing fuel rods, those missing fuel rods must be replaced with dummy rods that displace a volume of water that is equal to, or larger than, that displaced by the original rods.

- For DFCs with damaged fuel or fuel debris, a large ID is used. This is conservative, since it maximizes the area of the optimum moderated fuel.

- For DFIs with damaged fuel assemblies, the MPC basket cell ID is assumed as fuel boundary. This is conservative, since it maximizes the area of the optimum moderated fuel.

The design basis criticality safety calculations are performed for a single internally flooded HI-TRAC VW transfer cask with full water reflection on all sides (limiting cases for the HI-STORM FW system), for fuel assemblies listed in Chapter 2, are conservatively evaluated for the worst combination of manufacturing tolerances (as identified in Section 6.3), and include the calculational bias, uncertainties, and calculational statistics. In addition, a few results for single internally dry (no moderator) HI-STORM FW storage casks with full water reflection on all external surfaces of the overpack, including the annulus region between the MPC and overpack, are performed to confirm the low reactivity of the HI-STORM FW system in storage.

Note that throughout this chapter reactivity results are stated as maximum neutron multiplication factor values (k_{eff}) conservatively evaluated for the worst combination of manufacturing tolerances (as identified in Section 6.3), and including the calculational bias, uncertainties, and calculational statistics, unless otherwise noted.

For undamaged fuel, and for each of the MPC designs under flooded conditions (HI-TRAC VW), minimum soluble boron concentration (if applicable) and fuel assembly classes[††], Tables

[††] The assembly classes for BWR and PWR fuel are defined in Section 6.2.

6.1.1, 6.1.2 and 6.1.6 list the bounding maximum k_{eff} value, and the associated maximum allowable enrichment. Tables 6.1.1 and 6.1.2 provide the information for undamaged fuel without known or suspected cladding defects larger than pinhole leaks or hairline cracks, while Table 6.1.6 provides the information for low-enriched, channeled BWR undamaged fuel without known or suspected grossly breached fuel rods. The maximum allowed enrichments and the minimum soluble boron concentrations are also cited in Subsection 2.1.

For MPCs in the HI-STORM FW under dry conditions, results are listed in Table 6.1.3 for selected assembly classes.

For MPCs loaded with a combination of undamaged and damaged fuel assemblies with DFC/DFIs under flooded conditions, results are listed in Tables 6.1.4, 6.1.5, 6.1.7 and 6.1.8. For each combination of the MPC design and DFC/DFIs location pattern, the tables indicate the maximum number of DFC/DFIs and list the fuel assembly classes, the bounding maximum k_{eff} value, the associated maximum allowable enrichment, and if applicable the minimum soluble boron concentration. Allowed enrichments are also cited in Subsection 2.1.

These results confirm that the maximum k_{eff} values for the HI-STORM FW system are below the limiting design criteria ($k_{eff} < 0.95$) when fully flooded and loaded with any of the candidate fuel assemblies and basket configurations. Analyses for the various conditions of flooding that support the conclusion that the fully flooded condition corresponds to the highest reactivity, and thus is most limiting, are presented in Section 6.4. The capability of the HI-STORM FW system to safely accommodate damaged fuel and fuel debris is demonstrated in Subsection 6.4.4. The capability of the HI-STORM FW to accommodate low enriched, channeled BWR fuel as undamaged fuel demonstrated in Subsection 6.4.9.

Accident conditions have also been considered and no credible accident has been identified that would result in exceeding the design criteria limit on reactivity. After the MPC is loaded with spent fuel, it is seal-welded and cannot be internally flooded. The HI-STORM FW System for storage is dry (no moderator) and the reactivity is very low. For arrays of HI-STORM FW storage casks, the radiation shielding and the physical separation between overpacks due to the large diameter and cask pitch preclude any significant neutronic coupling between the casks.

For PWR fuel in the MPC-37, soluble boron in the water is credited. There is a strict administrative control on the soluble boron concentration during loading and unloading of the MPC, consisting of frequent and independent measurements (For details see Subsections 9.2.2, 9.2.3, 9.2.4, and 9.4.3 and the bases for LCO 3.3.1 in Chapter 13). An accidental loss of soluble boron is therefore not credible and hence not considered.

TABLE 6.1.2

BOUNDING MAXIMUM k_{eff} VALUES FOR EACH ASSEMBLY CLASS IN THE MPC-89 (HI-TRAC VW)

Fuel Assembly Class	**Maximum Allowable Planar-Average Enrichment (wt% ^{235}U)**	**Maximum k_{eff}**
7x7B	4.8	0.9317
7x7C	4.8	0.9318
8x8B	4.8	0.9369
8x8C	4.8	0.9399
8x8D	4.8	0.9380
8x8E	4.8	0.9281
8x8F	4.5	0.9328
8x8G	4.8	0.9301
9x9A	4.8	0.9421
9x9B	4.8	0.9410
9x9C	4.8	0.9338
9x9D	4.8	0.9342
9x9E/F	4.5	0.9346
9x9G	4.8	0.9307
10x10A	4.8	0.9435
10x10B	4.8	0.9417
10x10C	4.8	0.9389
10x10F	4.7	0.9440
10x10G	4.6	0.9466
10x10I	4.8	0.9422
11x11A	4.8	0.9457

TABLE 6.1.4(a)

BOUNDING MAXIMUM k_{eff} VALUES FOR THE MPC-37
WITH UP TO 12 DFC/DFIs*

Fuel Assembly Class of Undamaged Fuel	**4.0 wt% ^{235}U Maximum Enrichment for Undamaged Fuel and Damaged Fuel/Fuel Debris †**			**5.0 wt% ^{235}U Maximum Enrichment for Undamaged Fuel and Damaged Fuel/Fuel Debris †**		
	Minimum Soluble Boron Concentration (ppm)	**DFC**	**DFI**	**Minimum Soluble Boron Concentration (ppm)**	**DFC**	**DFI**
All 14x14, 16x16††	1300	0.9155	0.9072	1800	0.9305	0.9212
All 15x15, all 17x17	1800	0.9032	0.9038	2300	0.9276	0.9279

* The permissible location of DFC/DFIs is provided in Figure 2.1.1a. DFIs are restricted to damaged fuel only.

† For maximum allowable enrichments between 4.0 wt% ^{235}U and 5.0 wt% ^{235}U, the minimum soluble boron concentration may be calculated by linear interpolation between the minimum soluble boron concentrations specified for each assembly class.

†† For assembly class 16x16A intact fuel can be loaded with or without DFCs if permitted in the certificate of compliance.

TABLE 6.1.4(b)

BOUNDING MAXIMUM k_{eff} VALUES FOR MPC-32ML
WITH UP TO 8 DFC/DFIs *

Fuel Assembly Class of Undamaged Fuel	**4.0 wt% ^{235}U Maximum Enrichment for Undamaged Fuel and Damaged Fuel/Fuel Debris †**			**5.0 wt% ^{235}U Maximum Enrichment for Undamaged Fuel and Damaged Fuel/Fuel Debris †**		
	Minimum Soluble Boron Concentration (ppm)	**DFC**	**DFI**	**Minimum Soluble Boron Concentration (ppm)**	**DFC**	**DFI**
16x16D	1600	0.9149	0.9194	2100	0.9347	0.9381

* The permissible location of DFC/DFIs is provided in Figure 2.1.1b. DFIs are restricted to damaged fuel only.

† For maximum allowable enrichments between 4.0 wt% ^{235}U and 5.0 wt% ^{235}U, the minimum soluble boron concentration may be calculated by linear interpolation between the minimum soluble boron concentrations specified for each assembly class.

TABLE 6.1.5

BOUNDING MAXIMUM k_{eff} VALUES FOR THE MPC-89
WITH UP TO 16 DFC/DFIs*

Fuel Assembly Class	**Maximum Allowable Planar-Average Enrichment (wt% ^{235}U)**	**DFC**	**DFI**
All BWR Classes except 8x8F, 9x9E/F, 10x10F, 10x10G, 10x10I and 11x11A	4.8	0.9464	0.9421
8x8F, 9x9E/F and 10x10G	4.0	0.9299	0.9074
10x10F	4.6	0.9428	0.9372
10x10I and 11x11A	4.7	0.9432	0.9393

* The permissible location of DFC/DFIs is provided in Figure 2.1.2. DFIs are restricted to damaged fuel only.

TABLE 6.1.7(a)

BOUNDING MAXIMUM k_{eff} VALUES FOR THE MPC-37
WITH UP TO 8 DFC/DFIs IN REGION 2 AND 6 EMPTY CELLS*

Fuel Assembly Class of Undamaged Fuel	**4.0 wt% ^{235}U Maximum Enrichment for Undamaged Fuel and Damaged Fuel †**			**5.0 wt% ^{235}U Maximum Enrichment for Undamaged Fuel and Damaged Fuel †**		
	Minimum Soluble Boron Concentration (ppm)	**DFC**	**DFI**	**Minimum Soluble Boron Concentration (ppm)**	**DFC**	**DFI**
All 14x14, 16x16††	1300	0.8647	0.8657	1800	0.8796	0.8813
All 15x15, all 17x17	1800	0.8529	0.8546	2300	0.8769	0.8781

* The permissible location of DFC/DFIs is provided in Figure 1.2.3b. The damaged fuel assembly (as defined in the Glossary) only can be loaded into the DFCs or DFIs.

† For maximum allowable enrichments between 4.0 wt% ^{235}U and 5.0 wt% ^{235}U, the minimum soluble boron concentration may be calculated by linear interpolation between the minimum soluble boron concentrations specified for each assembly class.

†† For assembly class 16x16A intact fuel can be loaded with or without DFCs if permitted in the certificate of compliance.

TABLE 6.1.7(b)

BOUNDING MAXIMUM k_{eff} VALUES FOR THE MPC-37
WITH UP TO 4 DFC/DFIs IN REGION 2 AND 6 EMPTY CELLS*

Fuel Assembly Class of Undamaged Fuel	**4.0 wt% ^{235}U Maximum Enrichment for Undamaged Fuel and Damaged Fuel/Fuel Debris †**			**5.0 wt% ^{235}U Maximum Enrichment for Undamaged Fuel and Damaged Fuel/Fuel Debris †**		
	Minimum Soluble Boron Concentration (ppm)	**DFC**	**DFI**	**Minimum Soluble Boron Concentration (ppm)**	**DFC**	**DFI**
All 14x14, 16x16††	1300	0.8328	0.8369	1800	0.8447	0.8490
All 15x15, all 17x17	1800	0.8322	0.8334	2300	0.8530	0.8540

* The permissible location of DFC/DFIs is provided in Figure 1.2.3c. DFIs are restricted to damaged fuel only.

† For maximum allowable enrichments between 4.0 wt% ^{235}U and 5.0 wt% ^{235}U, the minimum soluble boron concentration may be calculated by linear interpolation between the minimum soluble boron concentrations specified for each assembly class.

†† For assembly class 16x16A intact fuel can be loaded with or without DFCs if permitted in the certificate of compliance.

TABLE 6.1.8

BOUNDING MAXIMUM k_{eff} VALUES FOR THE MPC-89
WITH UP TO 12 DFC/DFIs AND 4 EMPTY CELLS*

Fuel Assembly Class	**Maximum Allowable Planar-Average Enrichment (wt% ^{235}U)**	**DFC**	**DFI**
All BWR Classes except 8x8F, 9x9E/F, 10x10F, 10x10G, 10x10I and 11x11A	4.8	0.9305	0.9269
8x8F, 9x9E/F and 10x10G	4.0	0.8977	0.8912
10x10F	4.6	0.9271	0.9217
10x10I and 11x11A	4.7	0.9297	0.9245

* The permissible location of DFC/DFIs is provided in Figure 1.2.6b. DFIs are restricted to damaged fuel only.

the periphery of the assembly or facing the water gap, where they directly only face two full length rods (see Appendix 6.B, Section B.4). Assembly classes 10x10I and 11x11A have both types of the partial length rod locations. To determine a bounding configuration for those assembly classes where partial length rods are completely surrounded by full length rods, calculations are listed in Table 6.2.2 for the actual (real) assembly configuration and for the axial segments (assumed to be full length) with and without the partial length rods. The results show that the configurations with only the full length rods present, i.e. where the partial length rods are assumed completely absent from the assembly, is bounding. This is an expected outcome, since LWR assemblies are typically undermoderated, therefore reducing the fuel-to-water-ratio within the rod array tends to increase reactivity. Consequently, all assembly classes that contain partial length rods surrounded by full-length rods are analyzed with the partial length rods absent. For assembly class 10x10G, calculations with different assumptions for the length of the part-length rods are presented in Table 6.2.7, and show that reducing the length of the part length rods reduces reactivity. This means that the reduction in the fuel amount is more dominating than the change in moderation for this configuration. For this class, all rods therefore are assumed full length. For assembly classes 10x10I and 11x11A, where it is not clear which type of the partial length rod location is dominating, calculations for the actual (real) assembly configuration and for the axial segments (assumed to be full length) with and without the partial length rods are presented in Table 6.2.8, and show that the configurations with only the full length rods present, i.e. where the partial length rods are assumed completely absent from the assembly, is bounding. Note that in neither of the cases is the configuration with the actual part length rods bounding. The specification of the authorized contents has therefore no minimum requirement for the active fuel length of the partial length rods.

BWR assemblies are specified in Table 2.1.3 with a maximum planar-average enrichment. The analyses presented in this chapter use a uniform enrichment, equal to the maximum planar-average. Analyses presented in the HI-STORM FSAR ([6.0.1], Chapter 6, Appendix 6.B) show that this is a conservative approach, i.e. that a uniform enrichment bounds the planar-average enrichment in terms of the maximum k_{eff}. To verify that this is applicable to the HI-STORM FW, those calculations were re-performed in the MPC-89. The results are presented in Table 6.2.4, and show that, as expected, the planar average enrichments bound or are statistically equivalent to the distributed enrichment in the HI-STORM FW as they do in the HI-STORM 100. To confirm that this is also true for the higher enrichments analyzed here, additional calculations were performed and are presented in Table 6.2.2 in comparison with the results for the uniform enrichment. Since the maximum planar-average enrichment of 4.8 wt% ^{235}U is above the actual enrichments of those assemblies, actual (as-built) enrichment distributions are not available. Therefore, several bounding cases are analyzed. Note that since the maximum planar-average enrichment of 4.8 wt% ^{235}U is close to the maximum rod enrichment of 5.0 wt% ^{235}U, the potential enrichment variations within the cross section are somewhat limited. To maximize the differences in enrichment under these conditions, the analyzed cases assume that about 50% of the rods in the cross section are at an enrichment of 5.0 wt% ^{235}U, while the balance of the rods are at an enrichment of about 4.6 wt%, resulting in an average of 4.8 wt%. Calculations are performed for cross sections where all full-length and part-length, or only all full-length rods are present. For each case, two conditions are analyzed that places the different enrichment in areas

with different local fuel-to-water ratios. Specifically, one condition places the higher enriched rods in locations where they are more surrounded by other rods, whereas the other condition places them in locations where they are more surrounded by water, such as near the water-rods or the periphery of the assembly. The results are also included in table 6.2.2 and show that in all cases, the maximum k_{eff} calculated for the distributed enrichments are statistically equivalent to or below those for the uniform enrichments. Therefore, modeling BWR assemblies with distributed enrichments using a uniform enrichment equal to the planar-average value is acceptable and conservative. The assumed enrichment distributions analyzed are shown in Appendix 6.B.

Note that for some BWR fuel assembly classes, the Zircaloy water rod tubes are artificially replaced by water in the bounding cases to remove the requirement for water rod thickness from the specification of the authorized contents. For these cases, the bounding water rod thickness is listed as zero.

Two BWR classes (8x8B and 8x8D) are specified with slight variation in the number of fuel and/or water rods (see Section 6.B.4). The results listed in Section 6.1 utilize the minimum number of fuel rods, i.e. maximizing the water-to-fuel ratio. To show that this is appropriate and bounding, calculations were also performed with the alternative configurations, and are presented in Table 6.2.5. The results show that the reference conditions used for the calculations documented in Section 6.1 are in fact bounding.

For BWR assembly class 9x9E/F, two patterns of water rods were analyzed (see Section 6.B.4). The comparison is also presented in Table 6.2.5 and shows that the condition with the larger water rod spacing is bounding.

For PWR assembly class 15x15I (see Section 6.B.4), calculations with and without guide rods were performed. The comparison is also presented in Table 6.2.5. The case without the guide rods is used as the design basis case for this assembly type, therefore, no specific restrictions on the location and number of guide rods exists. The 15x15I fuel assembly class also includes versions with reduced number of fuel rods in specific locations, specifically; two versions with 212 fuel rods and one version with 208 fuel rods (see Section 6.B.4 for the specific fuel cross-sections). The missing fuel rods can be replaced with water or guide tubes. The comparison for the reduced number of fuel rods in 15x15I fuel class is shown in Table 6.2.5.

Typically, PWR fuel assemblies are designed with solid fuel pellets throughout the entire active fuel length. However, some PWR assemblies contain annular fuel pellets in the top and bottom 6 to 8 inches of the active fuel length. This changes the fuel to water ratio in these areas, which could have an effect on reactivity. However, the top and bottom of the active length are areas with high neutron leakage, and changes in these areas typically have no significant effect on reactivity. Studies with up to 12 inches of annular pellets at the top and bottom performed for the HI-STORM FW with various pellet IDs (see Table 6.2.6) confirm this, i.e., shown no significant reactivity effects, even if the annular region of the pellet is flooded with pure water. All calculations for PWR fuel assemblies are therefore performed with solid fuel pellets along

the entire length of the active fuel region, and the results are directly applicable to those PWR assemblies with annular fuel pellets. This is consistent with the HI-STORM 100, where the same analyzed conditions are analyzed and qualified.

TABLE 6.2.1

REACTIVITY EFFECT OF ASSEMBLY PARAMETER VARIATIONS in PWR Fuel in the MPC-37 with 2000 ppm soluble boron concentration
(all dimensions are in inches)

Fuel Assembly/ Parameter Variation	reactivity effect	Maximum k_{eff}	standard deviation
17x17B (5.0 wt% Enrichment)	Reference	0.9374	0.0004
increase pellet OD and clad ID (+0.004)	0.0052	0.9426	0.0003
decrease pellet OD and Clad ID (-0.004)	-0.0058	0.9316	0.0004
increase clad OD (+0.004)	-0.0014	0.9360	0.0004
decrease clad OD (-0.004)	0.0017	0.9391	0.0004
increase guide tube thickness (+0.004)	-0.0001	0.9373	0.0004
decrease guide tube thickness (-0.004)	0.0004	0.9378	0.0003
remove guide tubes (i.e., replace the guide tubes with water)	0.0009	0.9383	0.0004
reduced active length (100 Inches)	-0.0020	0.9354	0.0004
increase rod pitch (+0.004)	0.0019	0.9393	0.0004
reduce rod pitch (-0.004)	-0.0017	0.9357	0.0004

TABLE 6.2.2

REACTIVITY EFFECT OF ASSEMBLY PARAMETER VARIATIONS for BWR Fuel in the MPC-89
(all dimensions are in inches)

Fuel Assembly/ Parameter Variation	reactivity effect	Maximum k_{eff}	standard deviation
10x10A (Reference, full-length rods only)	Reference	0.9429	0.0004
increase pellet OD and Clad ID (+0.004)	0.0037	0.9466	0.0004
decrease pellet OD and Clad ID (-0.004)	-0.0042	0.9387	0.0004
increase clad OD (+0.004)	-0.0021	0.9408	0.0003
decrease clad OD (-0.004)	0.0032	0.9461	0.0004
increase water rod thickness (+0.004)	0.0002	0.9431	0.0004
decrease water rod thickness (-0.004)	0.0009	0.9438	0.0004
remove water rods (i.e., replace the water rod tubes with water)	0.0031	0.9460	0.0004
reduced active length (100 Inches)	-0.0026	0.9403	0.0004
remove channel	-0.0113	0.9316	0.0003
increase channel thickness (+0.020)	0.0007	0.9436	0.0003
full-length and part-length rods (real assembly)	-0.0054	0.9375	0.0004
part-length rods extended to full-length	-0.0102	0.9327	0.0004
increased rod pitch (+0.004)	0.0050	0.9479	0.0004
reduced rod pitch (-0.004)	-0.0043	0.9386	0.0003
distributed enrichment, Case 1	-0.0011	0.9418	0.0003
distributed enrichment, Case 2	+0.0004	0.9433	0.0003
distributed enrichment, Case 3	-0.0099	0.9330	0.0004
distributed enrichment, Case 4	-0.0121	0.9308	0.0003

TABLE 6.2.3 (continued)

EFFECT OF THE FLOODING OF THE PELLET-TO-CLAD GAP

Fuel Assembly Class	Maximum k_{eff}		
	Flooded Pellet-to-Clad Gap	Empty Pellet-to-Clad Gap	Difference
7x7B	0.9317	0.9261	-0.0056
7x7C	0.9318	0.9263	-0.0055
8x8B	0.9369	0.9318	-0.0051
8x8C	0.9399	0.9331	-0.0068
8x8D	0.9380	0.9334	-0.0046
8x8E	0.9281	0.9230	-0.0051
8x8F	0.9328	0.9275	-0.0053
8x8G	0.9301	0.9240	-0.0061
9x9A	0.9421	0.9370	-0.0051
9x9B	0.9410	0.9292	-0.0118
9x9C	0.9338	0.9290	-0.0048
9x9D	0.9342	0.9294	-0.0048
9x9E/F	0.9346	0.9261	-0.0085
9x9G	0.9307	0.9250	-0.0057
10x10A	0.9435	0.9391	-0.0044
10x10B	0.9417	0.9317	-0.0100
10x10C	0.9389	0.9333	-0.0056
10x10F	0.9440	0.9395	-0.0045
10x10G	0.9466	0.9408	-0.0058
10x10I	0.9422	0.9383	-0.0039
11x11A	0.9457	0.9421	-0.0036

Table 6.2.8

EFFECT OF PARTIAL LENGTH RODS FOR ASSEMBLY CLASSES 10x10I AND 11x11A

Parameter Variation	reactivity effect	Maximum k_{eff}	standard deviation
Assembly Class 10x10I			
full-length rods only	Reference	0.9422	0.0006
full-length and part-length rods (real assembly)	-0.0041	0.9381	0.0006
part-length rods extended to full-length	-0.0117	0.9305	0.0005
Assembly Class 11x11A			
full-length rods only	Reference	0.9457	0.0006
full-length and part-length rods (real assembly)	-0.0040	0.9417	0.0005
part-length rods extended to full-length	-0.0062	0.9395	0.0006

periphery. However, since the configurations listed above bound all credible configurations, they are conservatively used in the analyses.

In Table 6.3.5, results are presented for all representative conditions. The table shows the maximum k_{eff} value for centered and the two eccentric configurations for each condition, and the difference in k_{eff} between the centered and eccentric positioning. In most cases, moving the assemblies and DFCs to the periphery of the basket results in a reduction in reactivity, compared to the cell centered position, and moving the assemblies and DFCs towards the center results in an increase in reactivity, compared to the cell centered position. All calculations for these cases are therefore performed with assemblies/DFCs moved towards the center of the basket. For all cases with damaged fuel assemblies in DFIs, the centered positioning is bounding, therefore it is used in the design basis calculations.

TABLE 6.3.5

REACTIVITY EFFECTS OF ECCENTRIC POSITIONING OF CONTENT
(FUEL ASSEMBLIES AND DFC/DFIs) IN BASKET CELLS

CASE	**Contents Conte center (Ref**	**Content moved towards center of basket**		**ba**	**ards y**
	Maxi mum k_{eff}	**Maximum k_{eff}**	**k_{eff} Difference to Reference**	**Maximum k_{eff}**	**k_{eff} Difference to Reference**
MPC-37, Undamaged Fuel	0.9327	0.9380	0.0053	0.9143	-0.0184
MPC-37, Undamaged Fuel and Damaged Fuel/Fuel Debris (12 DFCs)	0.9260	0.9276	0.0016	0.9158	-0.0102
MPC-89, Undamaged Fuel	0.9369	0.9435	0.0066	0.9211	-0.0158
MPC-89, Undamaged Fuel and Damaged Fuel/Fuel Debris (16 DFCs)	0.9415	0.9451	0.0036	0.9301	-0.0114
MPC-32ML, Undamaged Fuel	0.9390	0.9427	0.0037	0.9156	-0.0234
MPC-32ML, Undamaged Fuel and Damaged Fuel/Fuel Debris (8 DFCs)	0.9372	0.9380	0.0009	0.9223	-0.0149

TABLE 6.3.5 (Continued)

REACTIVITY EFFECTS OF ECCENTRIC POSITIONING OF CONTENT (FUEL ASSEMBLIES AND DFC/DFIs) IN BASKET CELLS

CASE	**Contents Conte centered center of basket (Reference)**	**Content moved towards ba**			**ards y**
	Maximum k_{eff}	**Maximum k_{eff}**	**k_{eff} Difference to Reference**	**Maximum k_{eff}**	**k_{eff} Difference to Reference**
MPC-37, Undamaged Fuel and Damaged Fuel (12 DFIs)	0.9279	0.9110	-0.0169	0.9105	-0.0174
MPC-89, Undamaged Fuel and Damaged Fuel (16 DFIs)	0.9421	0.9388	-0.0033	0.9236	-0.0185
MPC-32ML, Undamaged Fuel and Damaged Fuel (8 DFIs)	0.9381	0.9281	-0.0100	0.9179	-0.0202

6.4.2.2 Partial Flooding

Calculations in this section address partial flooding in the HI-STORM FW system and demonstrate that the fully flooded condition is the most reactive.

The reactivity changes during the flooding process were evaluated in both the vertical and horizontal positions for the MPC-37 and MPC-89 designs. For these calculations, the cask is partially filled (at various levels) with full density (1.0 g/cm^3) water and the remainder of the cask is filled with steam consisting of ordinary water at a low partial density (0.002 g/cm^3 or less), as suggested in NUREG-1536. Results of these calculations are shown in Table 6.4.2. In all cases, the reactivity increases monotonically as the water level rises, confirming that the most reactive condition is fully flooded.

6.4.2.3 Clad Gap Flooding

As recommended by NUREG-1536, the reactivity effect of flooding the fuel rod pellet-to-clad gap regions, in the fully flooded condition, has been investigated. Table 6.4.3 presents maximum k_{eff} values that demonstrate the positive reactivity effect associated with flooding the pellet-to-clad gap regions. These results confirm that it is conservative to assume that the pellet-to-clad gap regions are flooded. For all cases, the pellet-to-clad gap regions are assumed to be flooded with clean, unborated water.

6.4.2.4 Preferential Flooding

Different potential conditions of preferential flooding are considered: preferential flooding of the MPC basket itself (i.e., different water levels in different basket cells), and preferential flooding involving Damaged Fuel Containers (DFCs) and Damaged Fuel Isolators (DFIs).

Preferential flooding of the MPC basket itself for any of the MPC fuel basket designs is not possible because flow holes are present on all four walls of each basket cell at the bottom of the MPC basket. The flow holes are sized to ensure that they cannot be blocked by crud deposits (see Chapter 12). For damaged fuel assemblies and fuel debris, the assemblies or debris are loaded into stainless steel Damaged Fuel Containers fitted with mesh screens which prevent damaged fuel assemblies or fuel debris from blocking the basket flow holes. Preferential flooding of the MPC basket is therefore not possible.

However, when DFCs are present in the MPC, a condition could exist during the draining of the MPC, where the DFCs are still partly filled with water while the remainder of the MPC is dry. As a simplifying and conservative approach to model this condition it is assumed that the DFCs are completely flooded while the remainder of the MPC is only filled with steam consisting of ordinary water at partial density (0.002 g/cm^3 or less). Assuming this condition, the case resulting in the highest maximum k_{eff} for the fully flooded condition (see Subsection 6.4.4) is re-analyzed assuming the preferential flooding condition. Table 6.4.4 lists the maximum k_{eff} in comparison with the maximum k_{eff} for the fully flooded condition. For all configurations, the preferential flooding condition results in a lower maximum k_{eff} than the fully flooded condition. Thus, the

preferential flooding condition is bounded by the fully flooded condition.

Once established, the integrity of the MPC Confinement Boundary is maintained during all credible off-normal and accident conditions, and thus, the MPC cannot be flooded. In summary, it is concluded that the MPC fuel baskets cannot be preferentially flooded, and that the potential preferential flooding conditions involving DFCs are bounded by the result for the fully flooded condition listed in Subsection 6.4.4.

When DFIs are present in the MPC, since the DFI does not contain a box, preferential flooding condition for the fuel basket with DFIs is not possible and no additional analysis is needed.

6.4.2.5 Design Basis Accidents

The analyses presented in Chapters 3 and 12 demonstrate that the damage resulting from the design basis accidents is limited to a loss of the water jacket for the HI-TRAC VW transfer cask and minor damage to the concrete radiation shield for the HI-STORM FW storage cask, which have no adverse effect on the design parameters important to criticality safety, and to minor deformation of the basket geometry, which is already considered in the analyses for the normal conditions.

In summary, the design basis accidents have no adverse effect on the design parameters important to criticality safety, and therefore, there is no increase in reactivity as a result of any of the credible off-normal or accident conditions involving handling, packaging, transfer or storage. Consequently, the HI-STORM FW system is in full compliance with the requirement of 10CRF72.124, which states that "before a nuclear criticality accident is possible, at least two unlikely, independent, and concurrent or sequential changes have occurred in the conditions essential to nuclear criticality safety."

6.4.3 Criticality Results

Results of the design basis criticality safety calculations for the condition of full flooding with water (limiting cases) and summarized in Section 6.1. To demonstrate the applicability of the HI-TRAC VW analyses, results of the design basis criticality safety calculations for the HI-TRAC VW cask (limiting cases) are also summarized in Section 6.1 for comparison. These data confirm that for each of the candidate fuel types and basket configurations the effective multiplication factor (k_{eff}), including all biases and uncertainties at a 95-percent confidence level, do not exceed 0.95 under all credible normal, off-normal, and accident conditions.

Additional calculations (CASMO-4) at elevated temperatures confirm that the temperature coefficients of reactivity are negative as shown in Table 6.3.1. This confirms that the calculations for the storage baskets are conservative.

In calculating the maximum reactivity, the analysis used the following equation:

$$k_{eff}^{max} = k_c + K_c \sigma_c + Bias + \sigma_B$$

where:

- ⇒ k_c is the calculated k_{eff} under the worst combination of tolerances;
- ⇒ K_c is the K multiplier for a one-sided statistical tolerance limit with 95% probability at the 95% confidence level [6.1.5]. Each final k_{eff} value is the result of averaging 100 (or more) cycle k_{eff} values, and thus, is based on a sample size of 100. The K multiplier corresponding to a sample size of 100 is 1.93. However, for this analysis a value of 2.00 was assumed for the K multiplier, which is larger (more conservative) than the value corresponding to a sample size of 100;
- ⇒ σ_c is the standard deviation of the calculated k_{eff}, as determined by the computer code;
- ⇒ ***Bias*** is the systematic error in the calculations (code dependent) determined by comparison with critical experiments in Appendix 6.A; and
- ⇒ σ_B is the standard error of the bias (which includes the K multiplier for 95% probability at the 95% confidence level; see Appendix 6.A).

The critical experiment benchmarking and the derivation of the bias and standard error of the bias (95% probability at the 95% confidence level) are presented in Appendix 6.A.

6.4.4 Damaged Fuel and Fuel Debris

6.4.4.1 Generic Approach

All MPCs are designed to contain PWR and BWR damaged fuel and fuel debris, loaded into DFCs, as well as PWR and BWR damaged fuel assemblies loaded into DFIs. The number and permissible location of DFCs are provided in Table 2.1.1 and the licensing drawing in Section 1.5, respectively. The number and permissible location of DFIs are the same as those for the DFCs. Because the entire height of the fuel basket contains the neutron absorber (Metamic-HT), axial movement of DFC/DFI's does not have any reactivity consequence to MPC.

Damaged fuel assemblies, for the most part, are considered to be assemblies with known or suspected cladding defects greater than pinholes or hairline cracks, or with missing rods, but excluding fuel assemblies with gross defects (for the exact definition see the Glossary). Fuel debris can include a large variety of configurations ranging from whole fuel assemblies with severe damage down to individual fuel pellets. Note that for damaged fuel assemblies that can be still handled by normal means, the use of a DFI can be substituted for the use of the DFC, as specified in Subsection 2.1.3.

To identify the configuration or configurations leading to the highest reactivity, a bounding approach is taken which is based on the analysis of regular arrays of bare fuel rods without cladding. Details and results of the analyses are discussed in the following subsections.

Note that since a modeling approach for all MPC designs is used that bounds both damaged fuel and fuel debris without distinguishing between these two conditions, the term 'damaged fuel' as used throughout this chapter designates both damaged fuel and fuel debris.

Note that the modeling approach for damaged fuel and fuel debris is identical to that used in the HI-STORM 100 and HI-STAR 100.

Bounding Undamaged Assemblies

The undamaged assemblies assumed in the basket in those cells not filled with DFCs or DFIs are those that show the highest reactivity for each group of assemblies, namely

- 9x9E for BWR 9x9E/F, 8x8F and 10x10G assemblies;
- 10x10F for BWR 10x10F assemblies;
- 11x11A for BWR 10x10I and 11x11A assemblies;
- 10x10A for all other BWR assemblies;
- 16x16A for all PWR assemblies with 14x14 and 16x16 arrays;
- 15x15F for all PWR assemblies with 15x15 and 17x17 arrays; and
- 16x16D for all PWR assemblies qualified for MPC-32ML.

Since the damaged fuel modeling approach results in higher reactivities, requirements of soluble boron for PWR fuel and maximum enrichment for BWR fuel are different from those for undamaged fuel only. Those limits are listed in Table 6.1.4 (PWR) and Table 6.1.5 (BWR) in Section 6.1. Also, those limits are applicable to the basket loading configurations, considered in Tables 6.1.7 (PWR) and Tables 6.1.8 (BWR) in Section 6.1. Note that for the calculational cases for damaged and undamaged fuel in the MPC-89, the same enrichment is used for the damage and undamaged assemblies.

Note that for the first group of BWR assemblies listed above (9x9E/F, 8x8F and 10x10G), calculations were performed for both 9x9E and 10x10G as undamaged assemblies, and assembly class 9x9E showed the higher reactivity, and is therefore used in the design basis analyses. This may seem contradictory to the results for undamaged assemblies listed in Table 6.1.2, where the 10x10G shows a higher reactivity. However, the cases in Table 6.1.2 are not at the same enrichment between those assemblies.

All calculations with damaged and undamaged fuel are performed for an active length of 150 inches. There are two assembly classes (17x17D and 17x17E) that have a larger active length for the undamaged fuel. However, the calculations for undamaged fuel presented in Table 6.1.1 show that the reactivity of those undamaged assemblies is at least 0.0050 delta-k lower than that of the assembly class 15x15F selected as the bounding assembly for the cases with undamaged and damaged fuel. The effect of the active fuel length is less than that, with a value of 0.0026 reported in Table 6.2.1 for a much larger difference in active length of 50 Inches. The difference in active length between the 17x17D/E and 15x15F is therefore more than bounded, and the 15x15F assembly class is therefore appropriate to bound all undamaged assemblies with 15x15 and 17x17 arrays.

Bare Fuel Rod Arrays

A conservative approach is used to model both damaged fuel and fuel debris in the DFCs, and damaged fuel in the DFIs, using arrays of bare fuel rods:

- Fuel in the DFC/DFIs is arranged in regular, rectangular arrays of bare fuel rods, i.e., all cladding and other structural material in the DFC/DFI is replaced by water.

- For cases with soluble boron, additional calculations are performed with reduced water density in the DFC. This is to demonstrate that replacing all cladding and other structural material with borated water is conservative.

- The active length of these rods is assumed to be the same as for the intact fuel rods in the basket, even for more densely packed bare fuel rod arrays where it results in a total amount of fuel in the DFC/DFI that exceeds that for the intact assembly.

- To ensure the configuration with optimum moderation and highest reactivity is analyzed, the amount of fuel per unit length of the DFC/DFI is varied over a large range. This is achieved by changing the number of rods in the array and the rod pitch. The number of rods are varied between 16 (4x4) and 324 (18x18) for BWR fuel, between 64 (8x8) and 576 (24x24) for PWR fuel, and between 289 (17x17) and 676 (26x26) for 16x16D.

This is a very conservative approach to model damaged fuel, and to model fuel debris configurations such as severely damaged assemblies and bundles of individual fuel rods, as the absorption in the cladding and structural material is neglected.

Further, this is a conservative approach to model fuel debris configurations such as bare fuel pellets due to the assumption of an active length of 150 inch (BWR and PWR). The actual height of bare fuel pellets in a DFC would be significantly below these values due to the limitation of the fuel mass for each basket position.

All calculations are performed for full cask models, containing the maximum permissible number of DFC/DFIs together with undamaged assemblies.

As an example of the damaged fuel model used in the analyses, Figure 6.4.1 shows the basket cell of an MPC-37 with a DFC or DFI containing a 14x14 array of bare fuel rods.

Principal results are listed in Tables 6.4.6, 6.4.7 and 6.4.11 for the MPC-37, MPC-89 and MPC-32ML, respectively. In all cases, the maximum k_{eff} is below the regulatory limit of 0.95.

For the HI-STORM 100, additional studies for damaged fuel assemblies were performed to further show that the above approach using arrays of bare fuel rods are bounding. The studies considered conditions including

- Fuel assemblies that are undamaged except for various numbers of missing rods

instrument tubes. For the higher soluble boron concentration required in the presence of damaged fuel, the same is shown in Table 6.4.5 (two columns on the right). In this case, only the bounding case (Assembly class 15x15F as undamaged fuel) was analyzed.

In summary, from a criticality safety perspective, non-fuel hardware inserted into PWR assemblies are acceptable for all allowable PWR types, and, depending on the assembly class, can increase the safety margin.

6.4.8 Neutron Sources in Fuel Assemblies

Fuel assemblies containing start-up neutron sources are permitted for storage in the HI-STORM FW system. The reactivity of a fuel assembly is not affected by the presence of a neutron source (other than by the presence of the material of the source, which is discussed later). This is true because in a system with a k_{eff} less than 1.0, any given neutron population at any time, regardless of its origin or size, will decrease over time. Therefore, a neutron source of any strength will not increase reactivity, but only the neutron flux in a system, and no additional criticality analyses are required. Sources are inserted as rods into fuel assemblies, i.e., they replace either a fuel rod or water rod (moderator). Therefore, the insertion of the material of the source into a fuel assembly will not lead to an increase of reactivity either.

6.4.9 Low Enriched, Channeled BWR fuel

The calculations in this subsection show that low enriched, channeled BWR fuel with indeterminable cladding condition is acceptable for loading in all storage locations of the MPC-89 without placing those fuel assemblies into DFC/DFIs, hence classifying those assemblies as undamaged. The main characteristics that must be assured are:

- The channel is present and attached to the fuel assembly in the standard fashion; and
- The channel is essentially undamaged; and
- The maximum planar average enrichment of the assembly is less than or equal to 3.3 wt% ^{235}U

This analysis covers older assemblies, where the cladding integrity is uncertain, and where a verification of the cladding condition is prohibitive. An example of this type of fuel is the so-called CILC fuel, which has potential corrosion-induced damaged to the cladding but does not have grossly breached spent fuel rods.

The presence of the essentially undamaged and attached channel confines the fuel rods to a limited volume and the low enrichment, required for all assemblies in the MPC, limits the reactivity of the fuel even under optimum moderation conditions. Due to the uncertain cladding condition, the analysis of this fuel follows essentially the same approach as that for the Damaged Fuel and Fuel Debris, i.e. bare fuel rod arrays of varying sizes are analyzed within the confines of the channel. This is an extremely conservative modeling approach for this condition, since reconfiguration is not expected and cladding would still be present. The results of this

conservative analysis are listed in Table 6.4.8 and show that the system remains below the regulatory limit with these assemblies in all cells of the MPC-89, without DFCs or DFIs.

These results confirm that even with unknown cladding condition the maximum k_{eff} values are below the regulatory limit when fully flooded and loaded with any of the BWR candidate fuel assemblies, therefore if the cladding is not grossly breached and the fuel assembly structurally sound it can be considered undamaged when loading in an MPC-89.

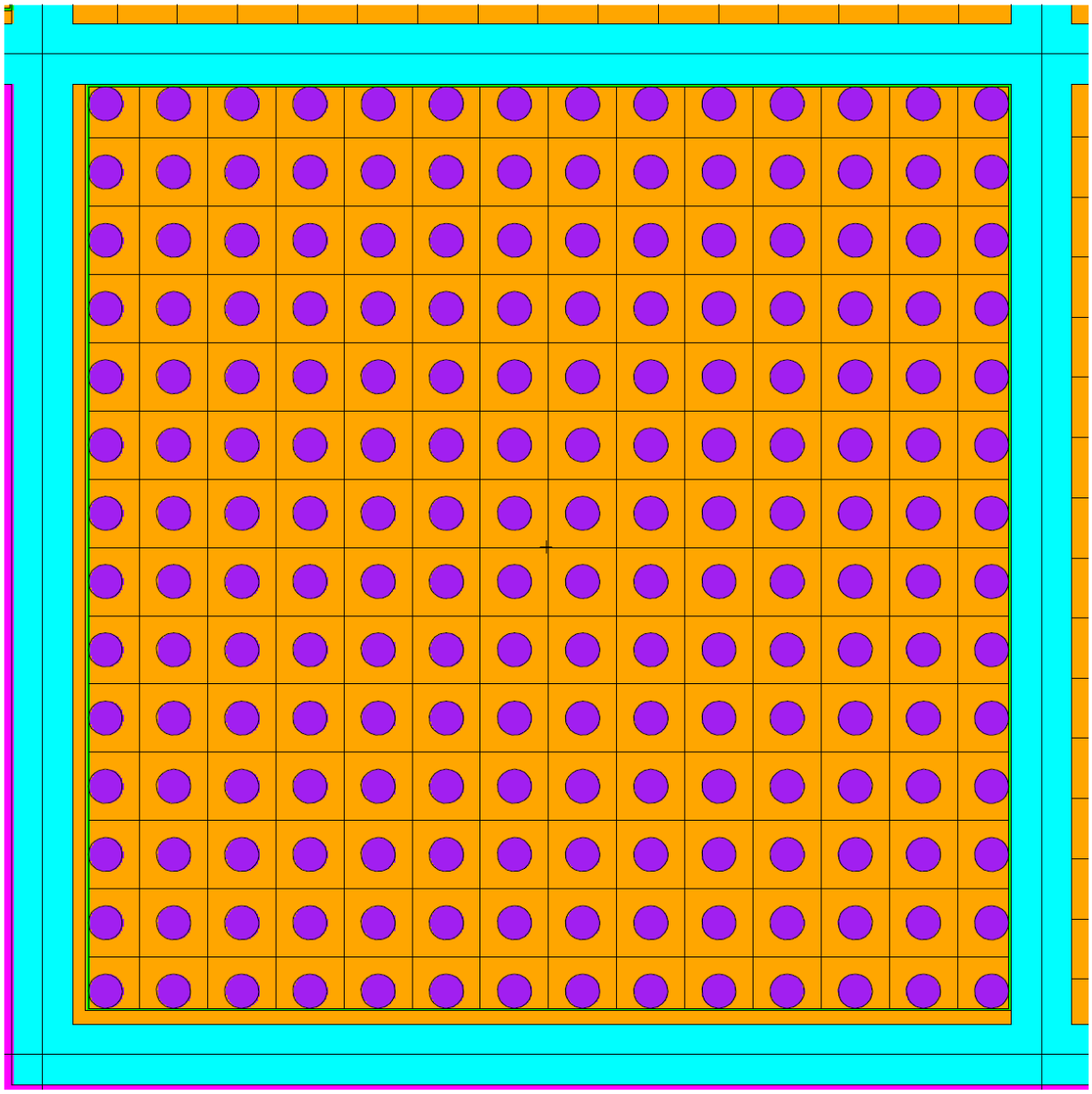

Figure 6.4.1(a): Calculational Model (planar cross-section) of a DFC in an MPC-37 cell with a 14x14 array of bare fuel rods

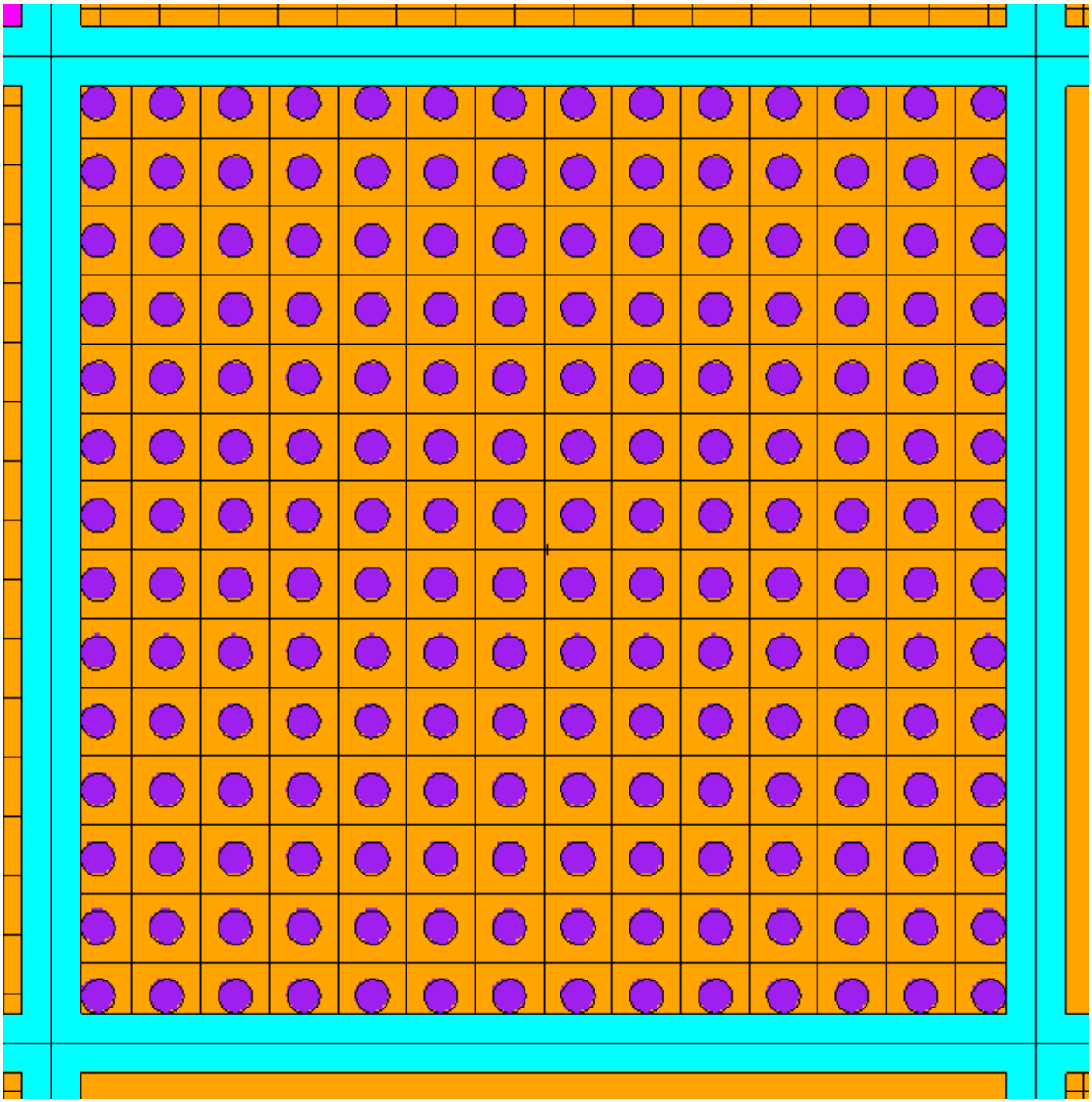

Figure 6.4.1(b): Calculational Model (planar cross-section) of a DFI in an MPC-37 cell with a 14x14 array of bare fuel rods

6.I.1 DISCUSSION AND RESULTS

6.I.1.1 Design Features

Criticality safety of HI-STORM FW with MPC-37 and burnup credit depends on the following principal design features:

- The inherent geometry of the fuel basket design within the MPC;
- The incorporation of permanent fixed neutron-absorbing material in the fuel basket structure. The baskets are completely manufactured from Metamic-HT, an aluminum and B_4C composite material. All assemblies are therefore completely surrounded by neutron absorbing material;
- An administrative limit on the maximum average enrichment for PWR fuel;
- An administrative limit on the minimum average assembly burnup for PWR fuel. The burnup credit methodology is described in detail in Appendix 6.I.B of this supplement, and implements an actinides and fission products approach; and

The number and permissible location of DFCs is provided in Figure 2.1.1 and the licensing drawing in Section 1.5, respectively. The following basket loading configurations are available for use in MPC-37 with the burnup credit approach:

- Configuration 1: Spent undamaged fuel assemblies are placed in all positions of the basket;
- Configuration 2: Fresh undamaged fuel assemblies are placed in one region (4 cells) at the periphery of the basket; spent undamaged fuel assemblies are placed in the remaining positions;
- Configuration 3: Damaged Fuel Containers (DFCs) or Damaged Fuel Isolators (DFIs) with the spent damaged fuel assemblies are placed in one region (12 cells) at the periphery of the basket; spent undamaged fuel assemblies are placed in the remaining positions;
- Configuration 4: DFCs with fresh fuel debris or spent damaged fuel assemblies are placed in one region (4 cells) at the periphery of the basket with the adjacent cells kept empty; spent undamaged fuel assemblies are placed in the remaining positions.

The basket loading configurations, discussed above, are graphically shown in Section 6.I.C.4.

Confirmation of the criticality safety of the HI-STORM FW system was accomplished with the three-dimensional Monte Carlo code MCNP5 [6.I.1.1]. K-factors for one-sided statistical tolerance limits with 95% probability at the 95% confidence level were obtained from the National Bureau of Standards (now NIST) Handbook 91 [6.I.1.2]. Benchmark calculations were made and summarized in Appendix 6.I.A to compare the primary code package (MCNP5) with experimental data, using critical experiments selected to encompass, insofar as practical, the design parameters of HI-STORM FW.

The design basis criticality safety calculations are performed for a single unreflected, internally

experimental data, using critical experiments selected to encompass, insofar as practical, the design parameters of HI-STORM FW.

The design basis criticality safety calculations are performed for a single unreflected, internally flooded cask. The results of the calculations, conservatively evaluated for the worst combination of manufacturing tolerances (as identified in Section 6.3), and including the calculational bias, uncertainties, and calculational statistics, are listed in Table 6.I.1.1. For each fuel assembly class, Tables 6.I.1.1 lists the bounding maximum k_{eff} value, the associated maximum allowable enrichment, and the minimum required assembly average burnup. The unreflected cask condition is acceptable since this configuration is shown to yield results that are statistically equivalent to the results for the corresponding reflected cask (see Subparagraph 6.4.2.1.1). The maximum enrichment and minimum burnup acceptance criteria are defined in Chapter 2.

In summary, the evaluation presented in this supplement shows that the maximum k_{eff} value, including all applicable biases and uncertainties is below 0.95 for all normal, off-normal and accident conditions. This demonstrates that the HI-STORM FW system with MPC-37 and PWR burnup credit is in full compliance with the criticality requirements of 10CFR72 and NUREG-1536. The maximum k_{eff} value for misloading conditions is below the limit of 0.98 recommended in ISG-8 Rev. 3 (see Appendix 6.I.D).

[Remainder of Supplement Proprietary Information Withheld in Accordance with 10 CFR 2.390]

shielding materials are treated in Section 8.8. The neutron absorbing materials are discussed in Section 8.9.

Chapter 1 provides a general description of the HI-STORM FW System including information on materials of construction. All materials of construction are identified in the drawing package provided in Section 1.5 and the ITS categories of the sub-components are identified in Table 2.0.1 through 2.0.8.

8.2.1 Structural Materials

8.2.1.1 Cask Components and Their Constituent Materials

The major structural materials that are used in the HI-STORM FW System are Alloy X, Metamic-HT, carbon steel, and aluminum. They are further discussed below in light of the ISG-15 requirements.

MPC

All structural components in an MPC Enclosure Vessel are made of Alloy X (stainless steel). Appendix 1.A provides discussions on Alloy X materials. The fuel basket is made of Metamic-HT neutron absorber described in Chapter 1, Section 1.2.1.4. The confinement boundary is made of stainless steel material for its superior strength, ductility, and resistance to corrosion and brittle fracture for long term storage. The basket shims used to support the basket are made of a creep resistant aluminum alloy. The two-piece MPC lid is either made entirely of Alloy X or the bottom portion of the lid is made of carbon steel with stainless steel veneer. The principal materials used in the fabrication of the MPC are listed in Section 1.2.

HI-STORM

The main structural function of the overpack is provided by carbon steel and the main shielding function is provided by plain concrete. Chapter 1 presents discussions on these materials. The materials used in the fabrication of the overpack are listed in Section 1.2.

HI-TRAC

As discussed in Chapter 1, the HI-TRAC VW transfer cask is principally made of carbon steel and lead. The HI-TRAC VW is equipped with a water jacket. The materials used in the fabrication of the transfer cask are listed in Section 1.2.

8.2.1.2 Synopsis of Structural Materials

i. Alloy X

The MPC enclosure vessel design allows use of any one of the five Alloy X materials: Types 304, 304LN, 316, 316LN and duplex steel (UNS S31803). Qualification of structures made of

Alloy X is accomplished by using the least favorable mechanical and thermal properties of the entire group for all MPC mechanical, structural, neutronic, radiological, and thermal conditions. Each of these material properties are provided in the ASME Code Section II [8.3.1].

As discussed in Appendix 1.A, the Alloy X approach is conservative because, no matter which material is ultimately utilized, the Alloy X guarantees that the performance of the MPC will meet or exceed the analytical predictions. The material properties are provided at various temperatures.

All structural analyses utilize conservatively established material properties such as design stress intensity, tensile strength, yield strength, and coefficient of thermal expansion for the range of temperature conditions that would be experienced by the cask components.

Chapter 3 provides the structural evaluation for the MPC Enclosure Vessel which is made of Alloy X. It is demonstrated that Alloy X provides adequate structural integrity for the MPC enclosure vessel under normal, off normal, and accident conditions. As shown in Chapter 4, the maximum metal temperature for Alloy X for the Confinement Boundary remains the design temperatures in Table 2.2.3 under all service modes.

Since stainless steel materials do not undergo a ductile-to-brittle transition in the minimum permissible service temperature range of the HI-STORM FW System, brittle fracture is not a concern for the MPC components. Subsection 8.4.3 presents further discussions on brittle fracture.

In Section 8.12, the potential for chemical and galvanic reaction of Alloy X in short-term and long-term operating conditions is evaluated. Alloy X is also used in the Confinement Boundary of all HI-STORM 100 MPCs.

ii. Metamic-HT

Criticality control in the HI-STORM FW System is provided by the coplanar grid work of the Fuel Basket honeycomb, made entirely of the Metamic-HT extruded metal matrix composite plates. The boron in Metamic-HT provides criticality control in the HI-STORM FW System. The Metamic-HT neutron absorber is a successor to the Metamic (classic) product widely used in dry storage fuel baskets and spent fuel storage racks (the “HT” designation in Metamic-HT stands for high temperature and is derived from this characteristic). Metamic-HT has been licensed in the HI-STAR 180 transport cask (Docket No. 71-9325).

Metamic-HT is also engineered to possess the necessary mechanical characteristics for structural application. The mechanical properties of Metamic-HT are derived from the strengthening of its aluminum matrix with ultra fine-grained (nano-particle size) alumina (Al_2O_3) particles that anchor the grain boundaries for high temperature strength and creep resistance.

Critical properties of Metamic-HT have been established as minimum guaranteed values by conducting tests using ASTM sanctioned procedures (Metamic-HT Sourcebook [8.9.7]). The

8.2.2 Nonstructural Materials

i. Aluminum Alloy

The space between the fuel basket and the inside surface of the Confinement Boundary is occupied by specially shaped precision extruded or machined basket shims made of a high strength and creep resistant aluminum alloy. The basket shims establish a conformal contact interface with the fuel basket and the MPC shell, and thus prevent significant movement of the basket. The basket shims are extruded and/or machined to a precise shape with a high degree of accuracy.

The clearance between the basket shims and the interfacing machined surface of the MPC cavity is set to be sufficiently small such that the thermal expansion of the parts inside the MPC under Design Basis heat load conditions will minimize any macro-gaps at the interface and thus minimize any resistance to the outward flow of heat, while ensuring that there is no restraint of free thermal expansion.

To further enhance thermal performance, the aluminum alloy basket shims are hard anodized. This provides for added corrosion protection and to achieve the emissivity value specified in Section 4.2. Mechanical properties of the shim material are provided in Section 3.3.

The basket shim material utilized in the HI-STORM FW system has also been used in other casks (viz. HI-STAR 180).

ii. Concrete

The plain concrete between the overpack inner and outer steel shells and in the overpack lid is specified to provide the necessary shielding properties and compressive strength. Table 1.2.5 in this FSAR and Appendix 1.D of the HI-STORM 100 FSAR which provide technical and placement requirements on plain concrete are also invoked for HI-STORM FW concrete.

The HI-STORM FW overpack concrete is enclosed in steel inner and outer shells connected to each other by radial ribs, and top and bottom plates and does not require rebar. As the HI-STORM FW overpack concrete is not reinforced, the structural analysis of the overpack only credits the compressive strength of the concrete.

The technical requirements on testing and qualification of the HI-STORM FW plain concrete are identical to those used in the HI-STORM 100 program. Accordingly, the testing and placement guidelines in Appendix 1.D of the HI-STORM 100 FSAR (Docket No. 72-1014), is incorporated in this SAR by reference.

ACI 318 is the reference code for the plain concrete in the HI-STORM FW overpack. ACI 318.1-85(05) is the applicable code utilized to determine the allowable compressive strength of the plain concrete credited in structural analysis.

8.4.3 Low Temperature Ductility of Ferritic Steels*

The risk of brittle fracture in the HI-STORM FW components is eliminated by utilizing materials that maintain high fracture toughness under extremely cold conditions.

The MPC canister is constructed from a series of stainless steels termed Alloy X. Austenitic stainless steel materials do not undergo a ductile-to-brittle transition (DBT) in the operating temperature range of the HI-STORM FW System. Therefore, brittle fracture is not a concern for the MPC components fabricated using austenitic stainless steel. Such an assertion cannot be made *a' priori* for the MPC confinement boundary components fabricated using duplex stainless steel grade of Alloy X, or for the HI-STORM FW storage overpack and HI-TRAC VW transfer cask that contain ferritic steel parts.

The use of duplex stainless steel grade of Alloy X material is limited to the MPC confinement boundary components and shall be restricted to the maximum temperatures specified in Table 1.A.6 as the material may suffer from precipitation of brittle micro-constituents above 600°F.

The duplex stainless steel material undergoes DBT below the temperature of -40°F/-40°C [8.4.2] (which is equal to the Lowest Service Temperature (LST) of MPC). In addition, Holtec Position Paper DS-213 [8.5.2] demonstrates that crack propagation in MPC lid-to-shell weld is not credible for austenitic and duplex stainless steel grades of Alloy X. Therefore, brittle fracture is not a concern for MPC confinement boundary components fabricated using duplex stainless steel grade of Alloy X as well.

In general, the impact testing requirement for the HI-STORM FW overpack and the HI-TRAC VW transfer cask is a function of two parameters: the LST† and the normal stress level. The significance of these two parameters, as they relate to impact testing of the overpack and the transfer cask, is discussed below.

In normal storage mode, the LST of the HI-STORM FW storage overpack structural members may reach -40°F in the limiting condition wherein the spent nuclear fuel (SNF) in the contained MPCs emits no (or negligible) heat and the ambient temperature is at -40°F (design minimum per Chapter 2: Principal Design Criteria). However, during the HI-STORM FW overpack transport operations, the applicable lowest service temperature is per 0°F (per the Technical Specifications). Therefore, two distinct LSTs are applicable to load bearing metal parts within the HI-STORM FW System; namely,

LST = 0°F for the HI-STORM FW overpack during transport operations and for the HI-TRAC VW transfer cask during all normal operating conditions.

LST = -40°F for the HI-STORM FW overpack during storage operations.

* This subsection has been copied from the HI-STORM 100 FSAR (Section 3.1) without any substantive change.
† LST (Lowest Service Temperature) is defined as the daily average for the host ISFSI site when the outdoors portions of the "short-term operations" are carried out.

8.8 GAMMA AND NEUTRON SHIELDING MATERIALS

Gamma and neutron shield materials in the HI-STORM FW System are discussed in Section 1.2. The primary shielding materials used in the HI-STORM FW system, like the HI-STORM 100 system, are plain concrete, steel, lead, and water.

The plain concrete enclosed by cylindrical steel shells, a thick steel baseplate, and a top annular plate provides the main shielding function in the HI-STORM FW overpack. The overpack lid has appropriate concrete shielding to provide neutron and gamma attenuation to minimize skyshine.

The transfer cask in the HI-STORM FW system (HI-TRAC VW) is provided with steel and lead shielding to ensure that the radiation and exposure objectives of 10CFR72.104 and 10CFR72.106 are met. The space between the inner shell and the middle shell is occupied by lead, conforming to ASTM B29, which provides the bulk of the cask's (gamma) radiation shielding capability. The water jacket between the middle shell and the outermost shell (filled with demineralized water or ethylene glycol fortified water, depending on the site environmental constraints) provides most of the neutron shielding capability to the cask. The water in the water jacket serves as the neutron shield on demand: When the cask is in the pool and the MPC is full of water, the water jacket is kept empty (or partially empty as necessary) to minimize the cask's weight, the neutron shielding function being provided by the water in the MPC cavity. However, when the MPC is emptied of water at the Decontamination and Assembly Station (DAS), then the neutron shielding capacity of the cask is replenished by filling the water jacket. The HI-TRAC VW bottom lid is extra thick steel to provide an additional measure of gamma shielding to supplement the gamma shielding at the bottom of the MPC.

8.8.1 Concrete

Table 1.2.5 of this FSAR and Appendix 1.D of HI-STORM 100 FSAR provide details of the concrete properties and the testing requirements. The *critical characteristics* of concrete are its density and compressive strength.

The density of plain concrete within the HI-STORM FW overpack is subject to a minor decrease due to long-term exposure to elevated temperatures. The reduction in density occurs primarily due to liberation of unbonded water by evaporation.

The density of concrete has been classified into three states in the published literature [8.8.1].

a) fresh density: the density of freshly mixed concrete
b) air-dry density: drying in air under ambient conditions, where moisture is lost until a quasi-equilibrium is reached
c) oven-dry density: concrete dried in an oven at 105ºC (221ºF)

Because the bulk temperature of concrete in HI-STORM FW is spatially variable, the oven-dry density is conservatively used as the reference density for shielding analysis.

Density loss during the initial drying process is considered in the fabrication of the HI-STORM FW overpack by providing wet concrete densities above the minimum required dry (hardened paste) density. Density loss during drying is on the order of 1% and conservatively imposes a larger delta between wet density and the minimum dry density. The data in the literature, viz., Neville [8.8.1] indicates that the density difference between the air-dry condition and oven-dry condition is about one fourth of the density difference experienced during the drying process. Therefore, the loss in density would be expected to be on the order of 0.25%. This density loss is very low and is considered too small to have a significant impact on the shielding performance of the overpack. Thus, the minimum "fresh density" during concrete placement is set equal to the reference density (Table 1.2.5) plus 1.25%.

Section 5.3 considers the minimum density requirements of concrete for effective shielding. The density requirement is confirmed per Table 1.2.5 of this FSAR and Appendix 1.D of the HI-STORM 100 FSAR.

8.8.2 Steel

Section 5.3 provides a discussion on steel as a shielding material and its composition used in the evaluation of its shielding characteristics.

8.8.3 Lead

Section 1.2 provides a discussion on lead used in HI-TRAC VW for gamma shielding. In the HI-TRAC VW transfer cask radial direction, gamma and neutron shielding consists of steel-lead-steel and water, respectively. In the HI-TRAC VW bottom lid, layers of steel-lead-steel provide an additional measure of gamma shielding to supplement the gamma shielding at the bottom of the MPC.

Mechanical properties of lead are provided in Section 3.3. Section 5.3 provides the minimum density and composition (mass fraction of trace elements) of lead.

8.8.4 Water

Water is used as a neutron shield in the HI-TRAC VW transfer cask. Section 5.3 provides the minimum density requirements of water for transfer cask water jacket and inside MPC. The shielding effectiveness is calculated based on the minimum water density at the highest operating temperature. Calculations show that additives for freeze protection (at low temperature operation) such as ethylene glycol do not have any adverse effect on effectiveness of the neutron shielding function of water in the water jacket.

As discussed in Section 5.1, there is only one accident that has any significant impact on the shielding configuration. This accident is the postulated loss of the neutron shield (water) in the HI-TRAC VW. The change in the neutron shield was conservatively analyzed by assuming that the entire volume of the liquid neutron shield was replaced by air.

- Helium – During loading operations, all water is removed from the interior of the MPC and an inert gas is injected. Internal MPC components get exposed to dry helium under pressure during storage.

- External atmosphere – During long term storage the casks are exposed to outside atmosphere, air with temperature variations, solar radiation, rain, snow, ice, etc.

As discussed below, the components of the HI-STORM FW System has been engineered to ensure that the environmental conditions expected to exist at nuclear power plant installations do not prevent the cask components from rendering their respective intended functions.

8.12.2 Compatibility of MPC Materials

8.12.2.1 MPC Confinement Boundary Materials

Austenitic Stainless Steels

The MPC confinement boundary is composed entirely of corrosion-resistant austenitic or duplex stainless steel. The corrosion-resistant characteristics of such materials for dry SNF storage canister applications, as well as the protection offered by these materials against other material degradation effects, are well established in the nuclear industry. The available austenitic and duplex stainless steels are listed in Appendix 1.A. The passive films (formed due to atmospheric exposure) of stainless steels range between 10 to 50 angstroms ($1x10^{-6}$ to $5x10^{-6}$ mm) thick [8.12.4]. Of all types of stainless steels (i.e., austenitic, ferritic, martensitic, precipitation hardenable and two-phase), "the austenitic stainless alloys are considered the most resistant to industrial atmospheres and acid media" [8.12.4].

The MPC contains no gasketed, threaded, or packed joints for maintaining confinement. The all-welded construction of the MPC confinement boundary and the inert backfill gas within ensures that the interior surfaces and the MPC internals (Metamic-HT baskets, shims, etc.) are not subject to corrosion. Exterior MPC surfaces would be exposed to the ambient environment while inside of a HI-STORM FW storage overpack or a HI-TRAC VW transfer cask.

Austenitic Stainless Steels in Demineralized and Borated Water Environments

The average MPC may be in contact with borated and/or demineralized water at temperatures below boiling and at pressures of up to three atmospheres (not including hydrotest) for approximately 2 to 3 days. For PWRs, the soluble boron levels are typically maintained at or below 2,500 ppm (0.25% boric acid solution). Experimental corrosion data for AISI Type 304 and 316 stainless steels (Swedish Designations SIS-14-2333 and SIS-14-2343, respectively) are available from the Swedish Avesta Jernverk laboratory [8.12.4]. Corrosive media evaluated in these tests include 4% (40,000 ppm) and 20% (200,000 ppm) boric acid solutions and water, all at boiling. Under the evaluated conditions, the tested steels are identified as "fully resistant", with corrosion rates of less than 0.1 mm per year. Even more extensive experimental corrosion data is available from ASM International [8.12.1]. For test conditions without rapid agitation,

similar to conditions that would exist during MPC fuel loading in a spent fuel pool, all austenitic and duplex stainless steels available for MPC fabrication are extremely resistant to corrosion in boric acid and water. More specifically, one set of data (UNS No. S30400) for 2.5% boric acid solution and water at 90.6° C (195° F), under no aeration and rapid agitation yielded a maximum corrosion rate of 0.003 mm per year [8.12.1].

No structural effects from any potential corrosion from demineralized and borated water environments are expected. Loading of a dry storage cask with reasonable delays can take up to two weeks. Adjusting the worst-case data for a 0.25% boric acid concentration the maximum thinning of any structural member in an MPC is only 4.80 x 10^{-6} mm (1.89 microinches). This is a negligibly small fraction (0.0006%) of the thickness of the thinnest structural member 7.9 mm (0.3125 in.) and a negligibly small fraction (0.004%) of the tolerance on the material thickness (0.045 in.) permitted by the governing ASME Code [8.12.2].

Austenitic Stainless Steels and Crud

Corrosion products cause "crud" deposits on fuel assemblies. Industry experience shows that crud, which is stable in oxygenated solutions, has not been found to contain materials that can react with stainless steel and cause significant degradation. Crud may leave a slight film of rust on the interior surfaces of the MPC during fuel loading and closure activities.

Austenitic Stainless Steels and Boron Crystals

Dry boron or boric acid crystals that remain in the MPC after drying and helium backfill are expected to have negligible corrosive effects on stainless steel due to the absence of the necessary reagents (oxygen and moisture).

Austenitic Stainless Steels and Marine Environments

The MPC is designed to be loaded with spent fuel assemblies from most light water reactor (LWR) nuclear power plants. LWR nuclear power plants, in general, are located near large bodies of water to ensure an adequate supply of cooling water. As a result many nuclear power plants and, subsequently, many potential ISFSI sites are located in coastal areas where dissolved salts may be present in atmospheric moisture. Casks deployed at coastal ISFSI sites that would be exposed to the harsh marine environment for prolonged periods must not suffer corrosion that will impair their functionality.

Extensive data show corrosion rates (pitting) to 0.0018 (mm/yr) for 304, 304LN, 316 and 316LN in marine environments at ambient temperatures after 26 years [8.12.1]. Using this bounding corrosion rate data, a Holtec Position Paper [8.12.3] estimates the total corrosion of the external surface of the MPC in 100 years of service is about half a millimeter which is significantly smaller than the available design margins in the material thickness. It is to be noted that this upper-bound is estimated for an extreme hypothetical marine environment. As discussed earlier for inland applications the corrosion rates are insignificant.

8.16 REFERENCES

[8.1.1] ISG-15, "Materials Evaluation," U.S. Nuclear Regulatory Commission, Washington, DC, Revision 0, January 2001.

[8.1.2] ISG-11, "Cladding Considerations for the Transportation and Storage of Spent Fuel," U.S. Regulatory Commission, Washington, DC, November 2003.

[8.3.1] ASME Boiler and Pressure Vessel Code, American Society of Mechanical Engineers, New York, NY, (2007).

[8.3.2] ACI 318-2005, "Building Code Requirements for Structural Concrete," American Concrete Institute, Ann Arbor, MI.

[8.3.3] NUREG-1536, "Standard Review Plan for Dry Cask Storage Systems," U.S. Nuclear Regulatory Commission, Washington, DC, January 1997.

[8.4.1] ASME Boiler & Pressure Vessel Code, Section III, Part D, 2007 Edition.

[8.4.2] "Practical Guidelines for the Fabrication of Duplex Stainless Steels," International Molybdenum Association (IMOA), London, UK – ISBN : 978-1-907470-00-4, Second Edition, 2009.

[8.5.1] Holtec Position Paper DS-329, "Stress Limits, Weld Categories, and Service Conditions", (Holtec Proprietary).

[8.5.2] Holtec Position Paper DS-213, "Acceptable Flaw Size in MPC Lid-to-Shell Welds" (Holtec Proprietary)

[8.7.1] Holtec Standard Procedure HSP-318, "Procedure for Blasting and Painting HI-TRAC Overpacks and Associated Components." (Holtec Proprietary)

[8.7.2] Holtec Standard Procedure HSP-319, "Procedure for Surface Preparation and Painting of HI-STORM 100 and 100S Overpacks." (Holtec Proprietary)

[8.8.1] A.M. Neville, "Properties of Concrete," Fourth Edition, Addison Wesley Longman, 1996.

[8.9.1] Turner, S.E., "Reactivity Effects of Streaming Between Discrete Boron Carbide Particles in Neutron Absorber Panels for Storage or Transport of Spent Nuclear Fuel," Nuclear Science and Engineering, Vol. 151, Nov. 2005, pp. 344-347.

[8.9.2] "HI-STORM 100 Final Safety Analysis Report", Holtec Report HI-2002444, latest revision, Docket No. 72-1014.

9.2 PROCEDURE FOR LOADING THE HI-STORM FW SYSTEM IN THE SPENT FUEL POOL

9.2.1 Overview of Loading Operations

The HI-STORM FW system is used to load, transfer, and store spent fuel. Specific steps, required to prepare the HI-STORM FW system for fuel loading, to load the fuel, to prepare the system for storage, and to place it in storage at an ISFSI are described in this chapter. The MPC transfer may be performed in the cask receiving area, at the ISFSI, or any other location deemed appropriate by the user. HI-TRAC VW and/or HI-STORM FW may be moved between the ISFSI and the fuel loading facility using any load handling equipment designed for such applications. Users of the HI-STORM FW system are required to develop detailed written procedures to control on-site transport operations. Instructions for general lifting, handling, and placement of the HI-STORM FW overpack, MPC, and HI-TRAC VW vary by site and are provided on a site-specific basis in Holtec-approved procedures and instructions.

The broad operational steps are explained below and illustrative figures are provided at the end of this section. It should be noted that the three versions of the HI-TRAC VW (HI-TRAC VW (standard version), HI-TRAC VW Version V and HI-TRAC VW Version V2) qualified for use with the HI-STORM FW System have essentially the same operations sequences and procedures. Unless otherwise noted, the procedures in this chapter mentioning the HI-TRAC VW refer to all versions.

At the start of loading operations, an empty MPC is upended. The empty MPC is raised and inserted into the HI-TRAC VW. The annulus is filled with plant demineralized water[1] and an inflatable seal is installed in the upper end of the annulus between the MPC and HI-TRAC VW to prevent spent fuel pool water from contaminating the exterior surface of the MPC when it is submerged in the pool. The MPC is filled with either spent fuel pool water or plant demineralized water (borated as required)[2]. The HI-TRAC VW top flange is outfitted with the lift blocks and the HI-TRAC VW and MPC are then raised and lowered into the spent fuel pool[3] for fuel loading using the lift yoke. Pre-selected assemblies[4] are loaded into the MPC and a visual verification of the assembly identification is performed.

While still underwater, a thick shielded lid (the MPC lid) is installed. The lift yoke remotely engages to the HI-TRAC VW lift blocks to lift the HI-TRAC VW and loaded MPC close to the spent fuel pool surface. When radiation dose rate measurements confirm that it is safe to remove

1 Users may substitute domestic water or radiologically clean borated water in each step where demineralized water is specified. Note that the lower inflatable annulus seal is inflated to seal the bottom of the annulus on the HI-TRAC VW Versions V and V2 prior to filling with water.

2 Users may also fill the MPC with water during HI-TRAC placement in the spent fuel pool.

3 Spent Fuel Pool as used in this chapter generically refers to the users designated cask loading location.

4 Damaged fuel assemblies may be loaded and stored in Damaged Fuel Containers in the MPC basket. Alternatively, damaged fuel that can be handled by normal means may be loaded in basket cells with Damaged fuel isolators at the top and bottom of the basket cell location.

the HI-TRAC VW from the spent fuel pool, the cask is removed from the spent fuel pool. The lift yoke and HI-TRAC VW are decontaminated, in accordance with instructions from the site's radiological protection personnel, as they are removed from the spent fuel pool.

HI-TRAC VW is placed in the designated preparation area and the lift yoke is removed. The next phase of decontamination is then performed. The top surfaces of the MPC lid and the upper flange of HI-TRAC VW are decontaminated. The neutron shield water jacket is filled with water (if drained). The inflatable annulus seal is removed and an annulus shield is installed. Dose rates are measured at the MPC lid to ensure that the dose rates are within expected values. For HI-TRAC VW Version V2, following decontamination, HI-TRAC VW is loaded into the Neutron Shield Cylinder (NSC) Assembly in the preparation area and attached to the NSC via fasteners/bolts.

Note:
HI-TRAC VW Version V2 contains a NSC Assembly for neutron shielding in lieu of a water jacket. The NSC contains Holtite-A for neutron shielding. Therefore operations steps involving a water jacket are not applicable to the HI-TRAC VW Version V2.

The MPC water level and annulus water level are lowered slightly, the MPC is vented, and the MPC lid is welded on using the automated welding system. Visual examinations are performed on the tack welds. Liquid penetrant (PT) examinations are performed on the root and final passes. A progressive PT examination as described in the Code Alternatives listed in the CoC is performed on the MPC Lid-to-Shell weld to ensure that the weld is satisfactory. As an alternative to volumetric examination of the MPC lid-to-shell weld, a multi-layer PT is performed including one intermediate examination after approximately every three-eighth inch of weld depth. The MPC welds are then pressure tested followed by an additional liquid penetrant examination performed on the MPC Lid-to-Shell weld to verify structural integrity. To calculate the helium backfill requirements for the MPC (if the backfill is based upon helium mass or volume measurements), the free volume inside the MPC must first be determined. This free volume may be determined by measurement or determined analytically. The remaining bulk water in the MPC is drained.

Depending on the burn-up or decay heat load of the fuel to be loaded in the MPC, moisture is removed from the MPC using either a vacuum drying system (VDS) or forced helium dehydration (FHD) system. For MPCs without high burn-up fuel or with high burnup fuel and with sufficiently low decay heat, the vacuum drying system may be connected to the MPC and used to remove all liquid water from the MPC. For MPCs with high burn-up fuel and higher heat loads, cyclic vacuum drying may be performed in accordance with Chapter 4 of this FSAR and ISG-11 Rev. 3. The annular gap between the MPC and HI-TRAC is filled with water during vacuum drying to promote heat transfer from the MPC and maintain lower fuel cladding temperatures. The internal pressure is reduced and held in accordance with Technical Specifications to ensure that all liquid water is removed.

An FHD system may also be used for high-burn-up fuel at higher decay heats as well as for moderate burn-up fuel and HBF at lower heat loads to remove residual moisture from the MPC.

measurements are taken, and any thermal testing (if required) is performed to ensure that the system is functioning within its design parameters.

9.2.2 Preparation of HI-TRAC VW and MPC

Note:
Handling of loaded equipment shall only be performed if the ambient temperature is above 0°F

Note:
When placing the loaded HI-TRAC VW Version V2 inside the NSC on the floor of the cask preparation area or when placing the loaded HI-TRAC VW Version 2 with attached NSC on top of a transporter, a shield ring pedestal is required to support the NSC.

1. Place HI-TRAC VW in the cask receiving area.
2. Perform a HI-TRAC VW receipt inspection and cleanliness inspection (See Table 9.2.5 for example).
3. Clear the HI-TRAC VW top for installation of the MPC.
4. Remove any road dirt. Remove any foreign objects from cavity locations.
5. If necessary, perform a radiological survey of the inside of HI-TRAC VW to verify there is no residual contamination from previous uses of the cask.
6. For HI-TRAC VW Versions V and V2, inspect the inflatable annulus seal on the bottom lid to verify it is free of cuts, cracks, and other damage that could affect the seal. If necessary, configure HI-TRAC VW with the bottom lid.
7. Perform an MPC receipt inspection and cleanliness inspection (See Table 9.2.4 for example).
8. Install the MPC inside HI-TRAC VW in accordance with site-approved rigging procedures.
9. If necessary, perform an MPC, lid, closure ring, drain line, vent, and drain port cover plate fit test and verify that the weld prep is in accordance with the approved fabrication drawings.

Note:
Annulus filling and draining operations vary by site. Instructions for filling and draining the annulus along with the use of the annulus overpressure system are provided on a site-specific basis.

Note:
If the HI-TRAC VW Versions V or V2 are used, the inflatable seal located on top of the bottom lid must be fully inflated prior to filling the annulus with non-contaminated water.

10. Fill the annulus with non-contaminated water to just below the inflatable seal seating surface.

11. Install the inflatable annulus seal around the MPC.

12. To the extent practicable, apply waterproof tape over any empty bolt holes or locations where water may create a decontamination issue.

Note:
Canister filling and draining operations vary by site. Instructions are provided on a site-specific basis.

13. Fill the MPC with water to approximately 12 inches below the top of the MPC shell. Refer to LCO 3.3.1 for boron concentration requirements.

ALARA Note:
Wetting the components that enter the spent fuel pool may reduce the amount of decontamination work to be performed later.

14. Place HI-TRAC VW in the designated cask loading area.

15. If used, the DFC can be installed in those cells where damaged fuel or fuel debris will be stored. If used, the bottom DFI can be installed in those cells where damaged fuel which can be handled by normal means and meeting the criteria of section 2.1.3.1, will be stored.

16. Verify spent fuel pool for boron concentration requirements in accordance with LCO 3.3.1. Testing must be completed within four hours prior to loading and every 48 hours after in accordance with the LCO. Two independent measurements shall be taken to ensure that the requirement of 10 CFR 72.124(a) is met.

9.2.3 MPC Fuel Loading

Note:
When loading an MPC requiring soluble boron, the boron concentration of the water shall be checked in accordance with LCO 3.3.1 before and during operations with fuel and water in the MPC.

1. Ensure that only fuel assemblies that meet all the applicable conditions for loading, as specified in the Approved Contents Section of Appendix B to the CoC, have been selected for loading into the MPC. Given the complexity of some of the approved loading configurations, caution must be taken in developing and verifying a plan for the fuel to be loaded. The selection of fuel to be loaded may include (but may not be limited to) the following considerations:
    a. Assemblies must meet the dimensional requirements for the applicable array/class.

b. If fuel is to be loaded using one of the loading patterns where requirements differ between basket cells, the pattern should be identified, and each assembly should be shown to meet the applicable requirements for the designated basket cell. This may include:
   i. Assembly decay heat (including any decay heat contribution of non-fuel-hardware located in the assembly, and any adjustments for fuel lengths) meets the decay heat limit of the cell
   ii. Assembly cooling time meets the cooling time limit established for the specific assembly and cell location. For MPC-37 and MPC-89, the cooling time limit for the assembly shall be calculated based on the assembly burnup and the decay heat limit of the cell using the equation and appropriate coefficients in Section 2.5 of Appendix B of the CoC. For MPC-32ML, the cooling time limit for the assembly shall be calculated based on the assembly burnup using the equation and appropriate coefficients in Section 2.5 of Appendix B of the CoC. Regardless of the result of the equation, assemblies must meet the minimum cooling time requirements in Appendix B Table 2.1-1.

2. Ensure assemblies are characterized according to their condition, and that damaged fuel or fuel debris is either loaded into damaged fuel containers (DFCs), or, only for damaged fuel that can be handled by normal means, loaded in basket cells with DFI assemblies at the top and bottom of the cell.
3. Load the pre-selected fuel assemblies into the MPC in accordance with the approved loading plan.
4. Perform a post-loading visual verification of the assembly identification to confirm the serial numbers match the approved loading plan
5. If required, install fuel shims and/or DFI top caps where necessary in the cells.

9.2.4 MPC Closure

1. Install MPC lid and remove the HI-TRAC VW from the spent fuel pool as follows:

a. Rig the MPC lid for installation in the MPC in accordance with site-approved rigging procedures.

b. Install the drain line to the underside of the MPC lid.

c. Align the MPC lid and lift yoke so the drain line will be positioned in the MPC for installation.

d. Seat the MPC lid in the MPC and visually verify that the lid is properly installed.

e. Record the time to begin the time-to-boil monitoring, if necessary.

f. Engage the lift yoke to HI-TRAC VW.

ALARA Note:
Activated debris may have settled on the top face of HI-TRAC VW and MPC during fuel loading. The cask top surface should be kept under water until a preliminary dose rate scan clears the cask for removal. Soluble boron concentration, when applicable, shall be monitored to prevent non-compliance with the Technical Specification LCO 3.3.1.

g. Raise the HI-TRAC VW until the MPC lid is just below the surface of the spent fuel pool. Survey the area above the cask lid to check for hot particles. Remove any activated or highly radioactive particles from the HI-TRAC VW or MPC.

h. Continue to raise the HI-TRAC VW under the direction of the plant's radiological control personnel. Continue general decontamination activities.

i. Remove HI-TRAC VW from the spent fuel pool while performing outer decontamination activities in accordance with directions from the radiological control personnel.

j. Place HI-TRAC VW in the designated cask preparation area. For HI-TRAC VW Version V2, the HI-TRAC is placed in the NSC assembly and attached to the NSC using fasteners after decontamination of the HI-TRAC outer surfaces. A shield ring pedestal shall be used to support the NSC.

ALARA Note:
When placing the loaded HI-TRAC VW Version V2 NSC onto the cask preparation area or transporter a shield ring pedestal shall be used. Openings in the shield ring pedestal may require supplemental shielding to maintain dose rate within COC values.
Note:
If the transfer cask is expected to be operated in an environment below 32 ^{o}F, the water jacket shall be filled with an ethylene glycol solution (25% ethylene glycol). Otherwise, the jacket shall be filled with clean potable or demineralized water. Depending on weight limitations, the neutron shield jacket may remain filled (with pure water or 25% ethylene glycol solution, as required). Cask weights shall be evaluated to ensure that the equipment load limitations are not violated. (Not applicable for HI-TRAC VW Version V2).
Note:
HI-TRAC VW Version V2 utilizes the NSC Assembly for neutron shielding in lieu of a water jacket. The NSC contains Holtite-A for neutron shielding. Therefore operational steps involving a water jacket are not applicable to the HI-TRAC VW Version V2.

k. If previously drained, fill the neutron shield jacket with plant demineralized water or an ethylene glycol solution (25% ethylene glycol) as necessary.

l. Disconnect any special rigging from the MPC lid and disengage the lift yoke in accordance with site-approved rigging procedures.

Warning:
MPC lid dose rates are measured to ensure that dose rates are within expected values. Dose rates exceeding the expected values could be an indication that fuel assemblies not meeting the CoC have been loaded.

m. Measure the dose rates at the MPC lid and verify that the combined gamma and neutron dose is below expected values.

n. Perform decontamination and a dose rate/contamination survey of HI-TRAC.

o. Prepare the MPC annulus for MPC lid welding by removing the annulus seal and draining the annulus approximately 6 inches, followed by the installation of the annulus shield.

2. Prepare for MPC lid welding as follows:

a. Clean the vent and drain ports to remove any dirt or standing water. Install the RVOAs to the MPC lid vent and drain ports, leaving caps open.

b. Lower the MPC internal water level in preparation for MPC lid-to-shell welding.

ALARA Note:
The MPC exterior shell survey is performed. Indications of contamination could require the MPC to be unloaded. In the event that the MPC shell is contaminated, users must decontaminate the annulus. If the contamination cannot be reduced to acceptable levels, the MPC must be returned to the spent fuel pool and unloaded. The MPC may then be removed and the external shell decontaminated.

c. Survey the MPC lid top surfaces and the accessible areas (approximately the top three inches) of the MPC external shell. Decontaminate the MPC lid and accessible surfaces of the MPC shell in accordance with LCO 3.2.1.

3. Weld the MPC lid as follows:

   a. As necessary, install the MPC lid shims around the MPC lid to make the weld gap uniform and to close the gap to the requirements of the licensing drawings.

   b. Install the Automated Welding System (AWS).

Note:
It may be necessary to remove the RVOAs to allow access for the automated welding system. In this event, the vent and drain port caps should be opened to allow for thermal expansion of the MPC water.

Caution:
A radiolysis of water may occur in high flux conditions inside the MPC creating combustible gases. Appropriate monitoring for combustible gas concentrations shall be performed prior to, and during MPC lid welding operations. The space below the MPC lid shall be purged with

inert gas prior to, and during MPC lid welding operations, including welding, grinding, and other hot work, to provide additional assurance that flammable gas concentrations will not develop in this space.

c. Perform combustible gas monitoring and purge the space under the MPC lid with an inert gas to ensure that there is no combustible mixture present in the welding area.

Note:
MPC closure welding procedures dictate the performance requirements and acceptance requirements of the weld examinations.

d. Perform the MPC lid-to-shell weld and NDE in accordance with the licensing drawings using approved procedures. Repair any weld defects in accordance with the applicable code and re-perform the NDE until the weld meets the required acceptance criteria.

4. Perform MPC lid-to-shell weld pressure testing in accordance with site-approved procedures.

5. Repeat the liquid penetrant examination on the final pass of the MPC lid-to-shell weld.

a. Repair any weld defects in accordance with the applicable code requirements and re-perform the NDE in accordance with approved procedures.

6. Drain the MPC and terminate time-to-boil monitoring and boron sampling program, where required.

ALARA Warning:
For operations involving HI-TRAC VW Version V2, the HI-TRAC VW shall be installed in the NSC prior to draining the water from the loaded MPC. The NSC contains Holtite-A shielding material to provide neutron shielding following drainage of water from the MPC.

Note:
Detailed procedures for MPC drying are provided on a site-specific basis. The following summarize those procedures.

7. Dry and backfill the MPC (Vacuum Drying Method).

Note:
During drying activities, the annulus between the MPC and the HI-TRAC VW must be maintained full of water. Water lost due to evaporation or boiling must be replaced to maintain the water level.

e. Fill the annulus between the MPC and HI-TRAC VW with clean water. The water level must be within 6” of the top of the MPC.

f. Attach the vacuum drying system (VDS) to the vent and drain port RVOAs. Other equipment configurations that achieve the same results may also be used.

Caution:

Rapidly reducing the pressure in the VDS piping and MPC while the system contains significant amounts of water can lead to freezing of the water and to improper conclusions that the system is dry. To prevent freezing of water, the MPC internal pressure should be lowered in a controlled fashion. The vacuum drying system pressure will remain at about 30 torr until most of the liquid water has been removed from the MPC. For HBF above a certain threshold, cyclic vacuum drying may be performed in accordance with Chapter 4 of this FSAR and ISG-11 Rev. 3.

g. Start the VDS system and slowly reduce the MPC pressure to below 3 torr.

Note:

Helium backfill shall be in accordance with the Technical Specification using 99.995% (minimum) purity. If at any time during final closure operations the helium backfill gas is lost or oxidizing gases are introduced into the MPC, then the dryness test shall be repeated and the MPC refilled with helium in accordance with the Technical Specifications.

h. Perform the MPC drying pressure test in accordance with the Technical Specifications.

i. When the MPC is dry, in accordance with the acceptance criteria in the LCO 3.1.1, close the vent and drain port valves.

j. Backfill the MPC in accordance with LCO 3.1.1 using site-specific procedures.

k. Disconnect the VDS from the MPC.

l. Close the drain port RVOA cap and remove the drain port RVOA.

m. If used, stop the water flow through the annulus between the MPC and HI-TRAC. Drain.

n. Close the vent port RVOA and disconnect the vent port RVOA.

Warning:

A HI-TRAC VW Version V or V2 containing an MPC loaded with spent fuel assemblies shall NOT be left unattended to insure that blockage of the air flow paths does not occur.

o. Drain the water from the HI-TRAC Annulus, and for HI-TRAC VW Versions V and V2, deflate the lower inflatable annulus seal and remove the annulus shield to establish air flow through the annulus.

8. Dry and Backfill the MPC (FHD Method):

Note:
Helium backfill shall be in accordance with the Technical Specification using 99.995% (minimum) purity. When using the FHD system to perform the MPC helium backfill, the FHD system shall be evacuated or purged and the system operated with high purity helium.
Note:
MPC internal pressure during FHD operation must comply with Technical Specification.
Caution:
MPC internal pressure during FHD operation may be less than the Technical Specification minimum backfill requirement. In the event of an FHD System failure where the MPC internal pressure is below the Technical Specification limit, the MPC internal pressure must be raised to at least 20 psig to place the MPC in an acceptable condition.

a. Attach the moisture removal system to the vent and drain port RVOAs. Other equipment configurations that achieve the same results may also be used.

b. Drain the water from the annulus. For HI-TRAC VW Versions V and V2 keep the lower inflatable seal inflated to prevent cooling air flow through the annulus which extends the FHD drying times.

c. Circulate the drying gas through the MPC while monitoring the circulating gas for moisture. Collect and remove the moisture from the system as necessary.

d. Continue the monitoring and moisture removal until LCO 3.1.1 is met for MPC dryness.

Note:
The demoisturizer module must maintain the temperature of the helium exiting the FHD below the Technical Specification limits continuously from the end of the drying operations until the MPC has been backfilled and isolated. If the temperature of the gas exiting the FHD exceeds the temperature limit, the dryness test must be repeated and the backfill re-performed.

e. Continue operation of the FHD system with the demoisturizer on.

f. While monitoring the temperatures into and out of the MPC, adjust the helium pressure in the MPC to provide a fill pressure as required by LCO 3.1.1.

g. Open the FHD bypass line and Close the vent and drain port RVOAs.

Warning:
A HI-TRAC VW Version V or V2 containing an MPC loaded with spent fuel assemblies shall NOT be left unattended to ensure that blockage of the air flow paths does not occur. The HI-TRAC vents shall be monitored to be free from blockage once every 4 hours.

h. For HI-TRAC VW Versions V and V2, deflate the lower inflatable annulus seal and remove the annulus shield to establish air flow through the annulus.

ALARA Warning:
Dose rates will rise around the top of the annulus as water is drained from the annulus. Apply appropriate ALARA practices.
Caution:
Limitations for the handling an MPC containing high burn-up fuel in a HI-TRAC VW are evaluated and established on a canister basis to ensure that acceptable cladding temperatures are not exceeded. Refer to SAR Chapter 4.

1. Drain the remaining water from the annulus.

2. Perform the HI-TRAC VW surface dose rate measurements in accordance with the Technical Specifications. Measured dose rates must be compared with calculated dose rates that are consistent with the calculated doses that demonstrate compliance with the dose limits of 10CFR 72.104(a). Remove any surface contamination from the HI-TRAC surfaces as required by LCO 3.2.1.

Note:
HI-STORM FW receipt inspection and preparation may be performed independent of procedural sequence, but prior to transfer of the loaded MPC. See Table 9.2.3 for example of HI-STORM FW Receipt Inspection Checklist.

3. Perform a HI-STORM FW receipt inspection and cleanliness inspection in accordance with a site-approved inspection site-approved inspection checklist, if required.

Note:
MPC transfer may be performed at any location deemed appropriate by the licensee. The following steps describe the general transfer operations. The HI-STORM FW may be positioned on an air pad, roller skid or any other suitable equipment in the cask receiving area or at the ISFSI. The HI-STORM FW or HI-TRAC VW may be transferred to the ISFSI using any equipment specifically designed for such a function. The licensee is responsible for assessing and controlling floor loading conditions during the MPC transfer operations. Installation of the lid, vent screen, and other components may vary according to the cask movement methods and location of MPC transfer.

9.2.6 Placement of HI-STORM FW into Storage

Note:
For stackup and MPC transfer operations from the HI-TRAC VW Version V2 to the HI-STORM FW Overpack, the terms “HI-TRAC” or “HI-TRAC VW” refers to the HI-TRAC VW installed in the NSC Assembly.

1. Position an empty HI-STORM FW module at the designated MPC transfer location.

2. Remove any road dirt with water. Remove any foreign objects from cavity locations.

3. Transfer the HI-TRAC VW to the MPC transfer location.

ALARA Warning:

When transferring the loaded HI-TRAC VW V2 (HI-TRAC and NSC) to the mating device, the exposed region of HI-TRAC below the NSC will have higher dose rates.

4. Install the mating device on top of the HI-STORM FW.

5. Position HI-TRAC VW above HI-STORM FW.

6. Align HI-TRAC VW over HI-STORM FW and mate the components.

7. Attach the MPC to the lifting device in accordance with the site-approved rigging procedures.

8. Raise the MPC slightly to remove the weight of the MPC from the mating device.

9. Remove the bottom lid from HI-TRAC VW using the mating device.

ALARA Warning:

Personnel should remain clear (to the maximum extent practicable) of the HI-STORM FW annulus when HI-TRAC VW is removed due to radiation streaming. The mating device may be used to supplement shielding during removal of the MPC lift rigging.

10. Lower the MPC into HI-STORM FW.

11. Disconnect the MPC lifting slings from the lifting device.

Note:

It may be necessary, due to site-specific circumstances, to move HI-STORM FW from under the empty HI-TRAC VW to install the HI-STORM FW lid, while inside the Part 50 facility. In these cases, users shall evaluate the specifics of their movements within the requirements of their Part 50 license.

12. Remove HI-TRAC VW from on top of HI-STORM FW with or without the HI-TRAC bottom lid.

13. Remove the MPC lift rigging and install plugs in the empty MPC bolt holes.

14. Place HI-STORM FW in storage as follows:

Note:

Closing the mating device drawer while the MPC is in the HI-STORM will block air flow. The mating device drawer shall remain open, to the extent possible, such that the open air path is at least as large as the HI-STORM Lid vent openings until the mating device is to be removed from the HI-STORM. When the mating device drawer is closed for mating device

Table 9.2.4 MPC INSPECTION CHECKLIST
Note: This checklist provides the basis for establishing a site-specific inspection checklist for MPC. Specific findings shall be brought to the attention of the appropriate site organizations for assessment, evaluation and potential corrective action prior to use.

MPC Lid and Closure Ring:

1. The MPC lid and closure ring surfaces shall be relatively free of dents, gouges or other shipping damage.
2. The drain line shall be inspected for straightness, thread condition, and blockage.
3. Vent and Drain attachments shall be inspected for availability, thread condition operability, and general condition.
4. Fuel spacers (if used) shall be inspected for availability and general condition.
5. Drain and vent port cover plates shall be inspected for availability and general condition.
6. Serial numbers shall be inspected for readability.
7. The MPC lid lift holes shall be inspected for thread condition.
8. The MPC lid, cover plates, and closure ring shall be checked for proper fit-up.

MPC Main Body:

1. All visible MPC body surfaces shall be inspected for dents, gouges, or other shipping damage.
2. Fuel cell openings shall be inspected for debris, dents, and general condition.
3. Basket panels shall be inspected for gross deformation that may inhibit fuel assembly insertion.
4. DFIs (if used) shall be inspected for availability and general condition.
5. DFCs (if used) shall be inspected for availability and general condition.
6. Lift lugs shall be inspected for general condition.
7. Lift lug threads shall be in inspected for thread condition
8. Verify proper MPC basket type for contents.
9. Serial numbers shall be inspected for readability.

Table 9.2.5 HI-TRAC VW TRANSFER CASK INSPECTION CHECKLIST
Note: This checklist provides the basis for establishing a site-specific inspection checklist for the HI-TRAC VW Transfer Cask. Specific findings shall be brought to the attention of the appropriate site organizations for assessment, evaluation, and potential corrective action prior to use.

HI-TRAC VW Main Body:

1. The painted surfaces shall be inspected for corrosion, chipped, cracked, or blistered paint.
2. Annulus inflatable seal groove shall be inspected for cleanliness, scratches, dents, gouges, sharp corners, burrs, or any other condition that may damage the inflatable seal.
3. The nameplate shall be inspected for presence and general condition.
4. The neutron shield jacket shall be inspected for leaks.
5. Neutron shield jacket pressure relief device shall be inspected for presence and general condition.
6. The neutron shield jacket fill and neutron shield jacket drain plugs shall be inspected for presence, leaks, and general condition.
7. Bottom lid flange surface shall be clean and free of large scratches and gouges that may inhibit sealing of the lid to body.
8. The threaded anchor locations shall be inspected for thread damage, excessive wear, and general condition.
9. HI-TRAV VW Versions V and V2 annulus shield shall be inspected for presence and general condition

HI-TRAC VW Bottom lid:

1. For HI-TRAC VW, the seal shall be inspected for cracks, breaks, cuts, excessive wear, flattening, and general condition.
2. Drain line shall be inspected for blockage and thread condition.
3. The lifting holes shall be inspected for thread damage.
4. The bolts shall be inspected for indications of overstressing (i.e., cracks and deformation, thread damage, and excessive wear).
5. For HI-TRAC VW Version V2, the I-Piece shall be inspected for presence and general condition
6. The painted surfaces shall be inspected for corrosion, chipped, cracked, or blistered paint.
7. Threads shall be inspected for indications of damage.

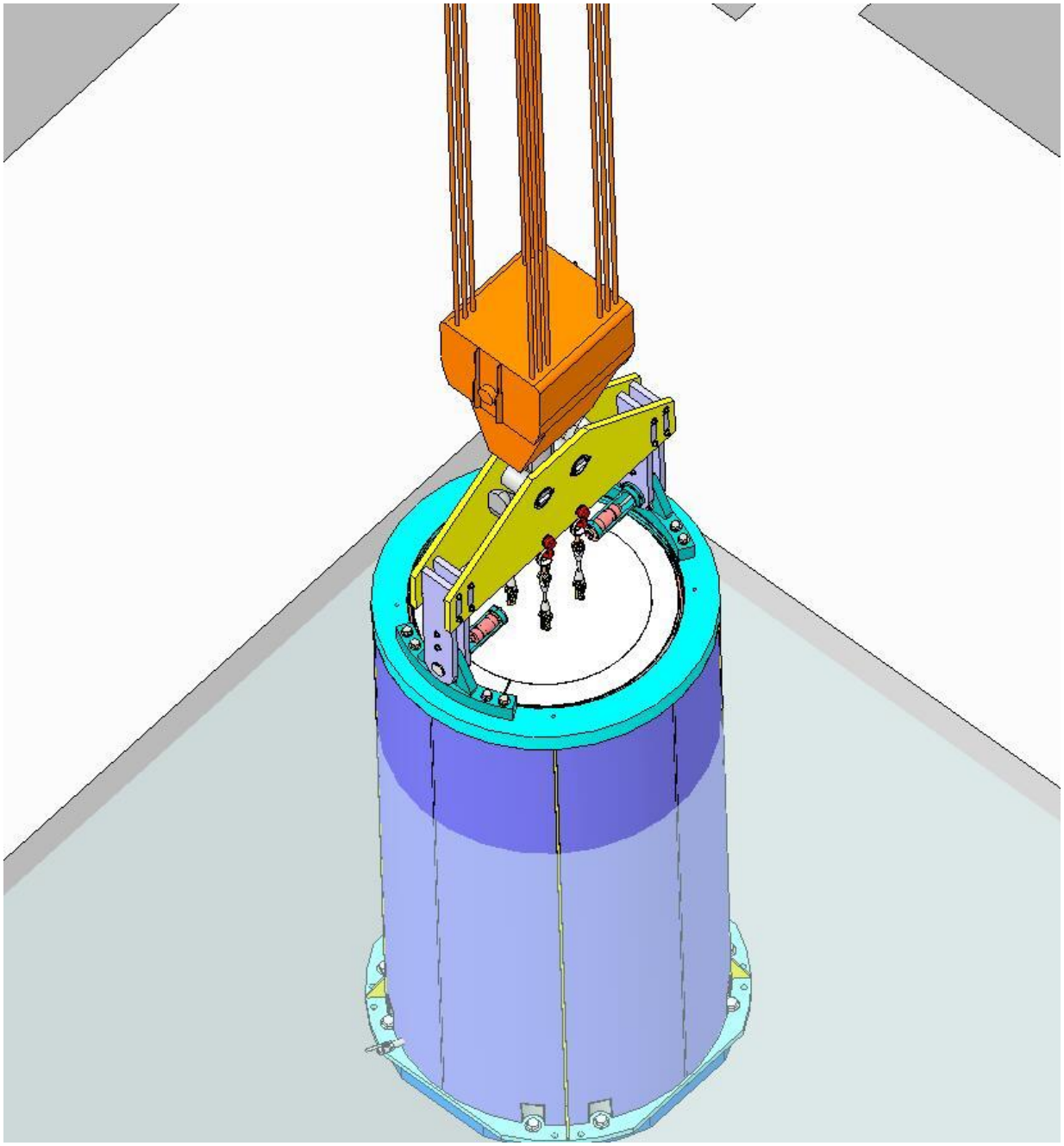

FIGURE 9.2.6A: HI-TRAC REMOVAL FROM THE SPENT FUEL POOL

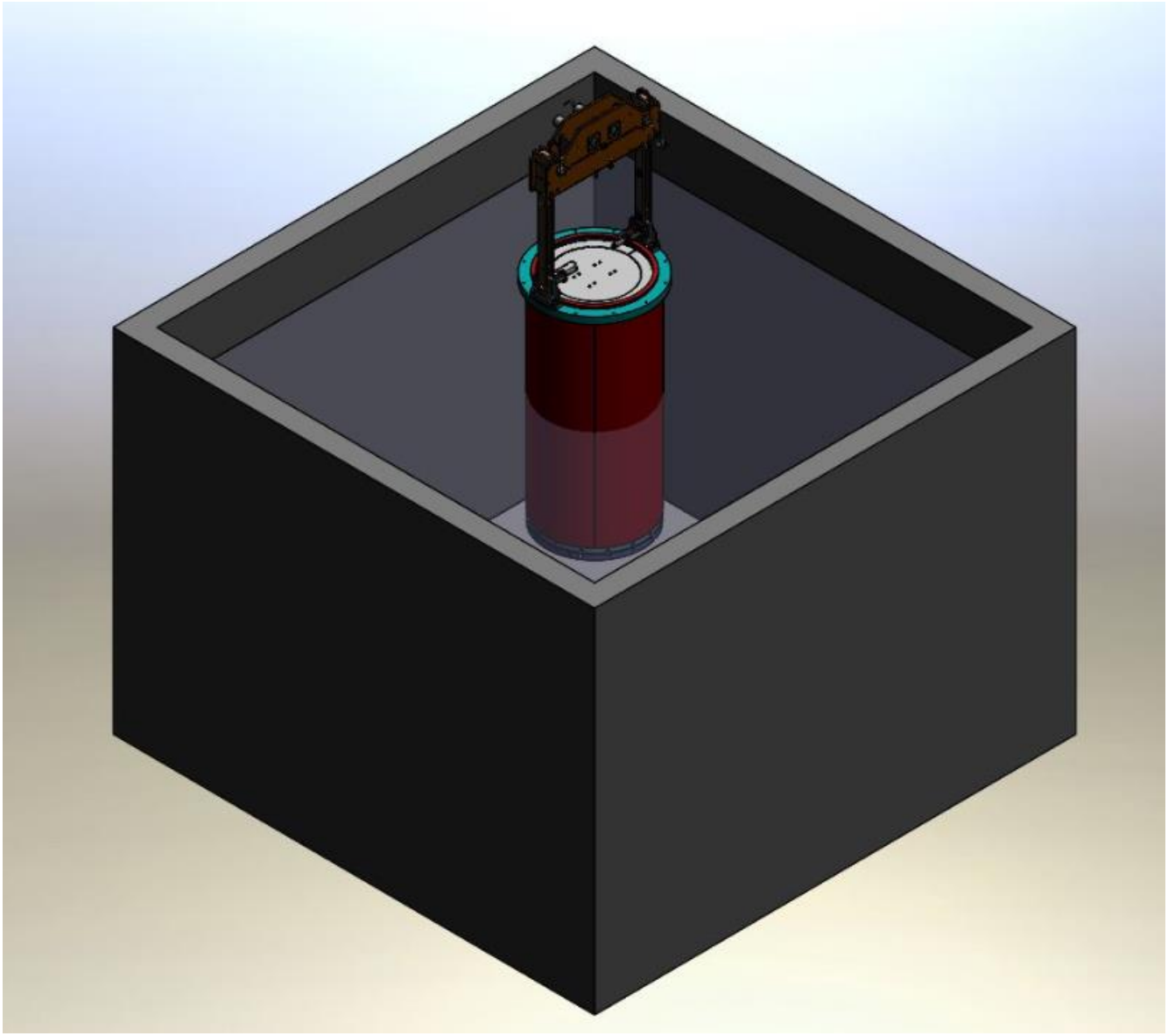

FIGURE 9.2.6B: HI-TRAC REMOVAL FROM THE SPENT FUEL POOL (AS DEPICTED, FOR HI-TRAC VW VERSION V2, THE NEUTRON SHIELD CYLINDER (NSC) IS NOT ATTACHED TO HI-TRAC DURING FUEL LOADING)

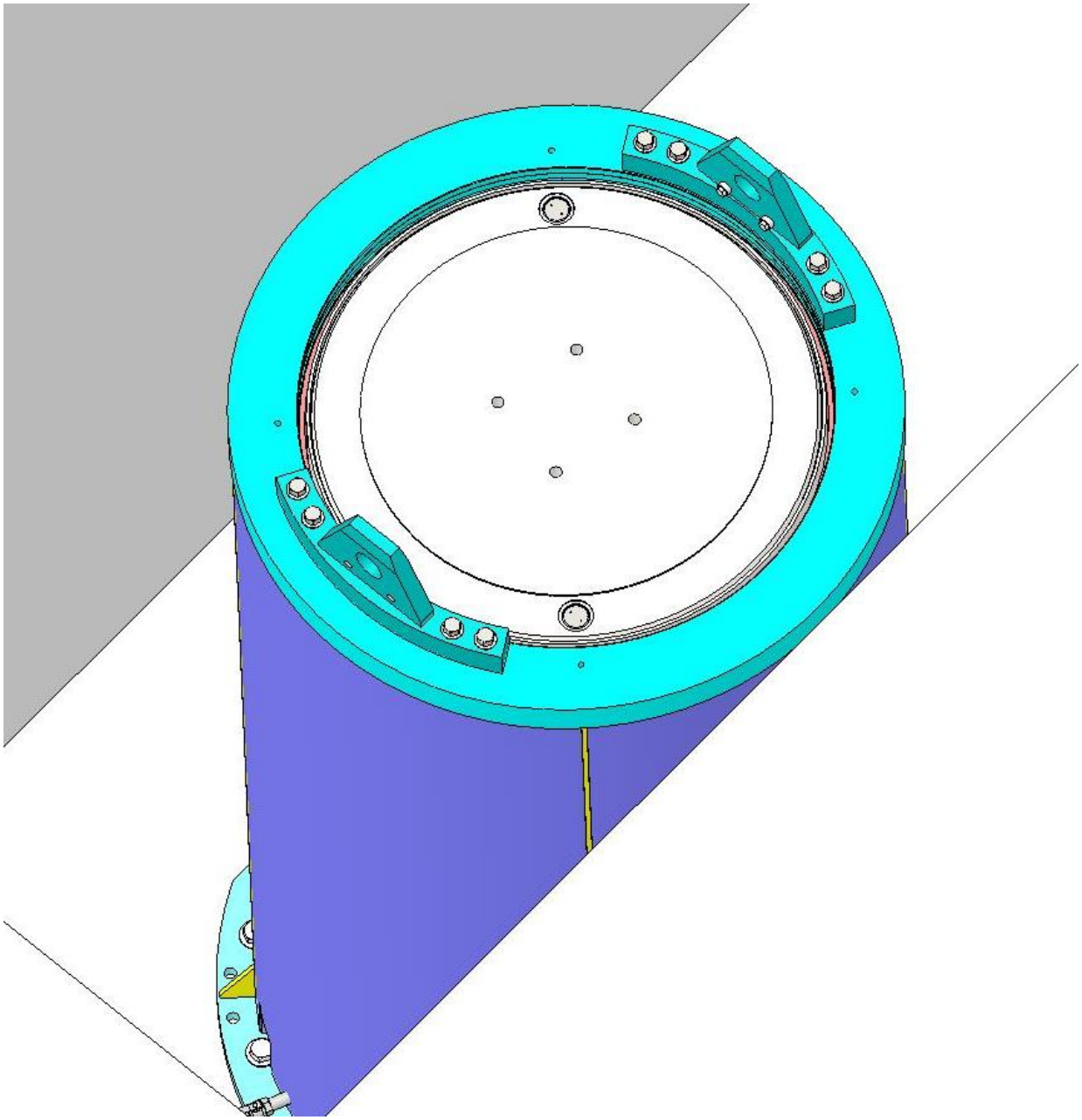

FIGURE 9.2.7A: HI-TRAC PLACEMENT IN THE CASK PREPARATION AREA

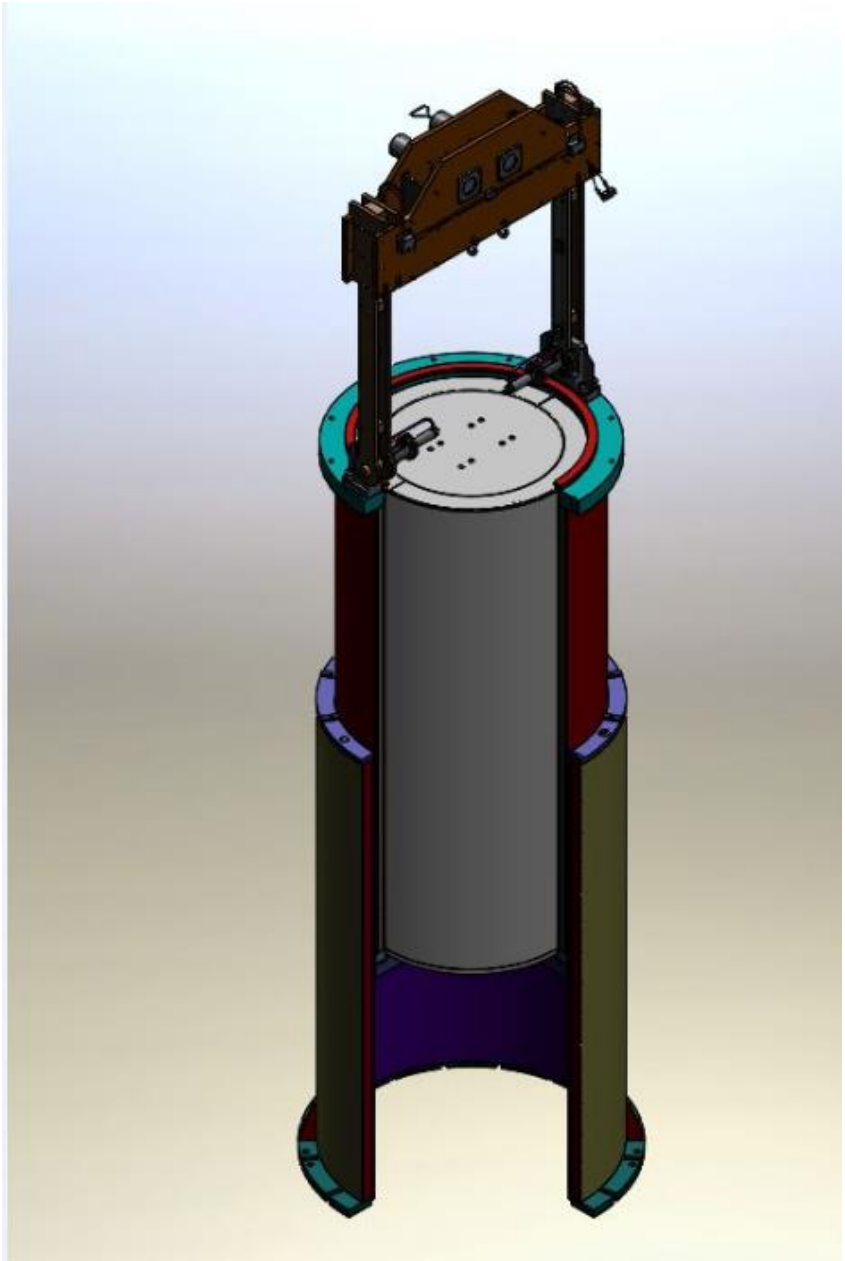

FIGURE 9.2.7B: HI-TRAC VW VERSION V2 ASSEMBLY LOADING (LOADED HI-TRAC VW PLACEMENT INTO NEUTRON SHIELD CYLINDER (NSC))

9.4 PROCEDURE FOR UNLOADING THE HI-STORM FW FUEL IN THE SPENT FUEL POOL

9.4.1 Overview of HI-STORM FW System Unloading Operations

ALARA Note:
The procedure described below uses the weld removal system to remove the welds necessary to enable the MPC lid to be removed. Users may opt to remove some or all of the welds using hand operated equipment. The decision should be based on dose rates, accessibility, degree of weld removal, and available tooling and equipment.

The HI-STORM FW system unloading procedures describe the general actions necessary to prepare the MPC for unloading, flood the MPC cavity, remove the lid welds, unload the spent fuel assemblies, and recover the HI-TRAC VW and empty MPC. Special precautions are outlined to ensure personnel safety during the unloading operations, and to prevent the risk of MPC over pressurization and thermal shock to the stored spent fuel assemblies. The principal operational steps are summarized below.

Note:
For stackup and MPC transfer operations from the HI-STORM FW Overpack to the HI-TRAC VW Version V2, the terms "HI-TRAC" or "HI-TRAC VW" refers to the HI-TRAC VW installed in the NSC Assembly.

The MPC is recovered from HI-STORM FW either at the ISFSI or the fuel building using the same methods as described in Section 9.2 (in reverse order). The HI-STORM FW lid is removed and the mating device is positioned on the HI-STORM FW. MPC slings are attached to the MPC lift attachment and positioned on the MPC lid. HI-TRAC VW is positioned on top of HI-STORM FW and the slings are brought through the top of the HI-TRAC VW. The MPC is raised into HI-TRAC VW, the mating device drawer is closed, and the bottom lid is bolted to the HI-TRAC VW. The HI-TRAC VW is removed from on top of HI-STORM FW.

HI-TRAC VW and its enclosed MPC are returned to the designated preparation area and the MPC lift rigging is removed. For HI-TRAC VW Versions V and V2, the lower inflatable seal is inflated to seal the bottom of the annular region. Water is added into or circulated through the annulus space between the MPC and HI-TRAC VW, if required. The annulus and HI-TRAC VW top surfaces are covered to protect them from debris produced when removing the MPC lid weld. The weld removal system is installed and the MPC vent and drain ports are accessed. The vent RVOA is attached to the vent port and an evacuated sample bottle is connected. The vent port is slightly opened to allow the sample bottle to obtain a gas sample from inside the MPC. A gas sample is performed to assess the condition of the fuel assembly cladding. A vent line is attached to the vent port and the MPC is vented to the fuel building ventilation system or spent fuel pool as determined by the site's radiation protection personnel. The MPC is filled with water (borated as required) at a controlled rate to avoid over-pressuring the MPC. The weld removal system then removes the MPC lid-to-shell weld. The weld removal system is removed with the MPC lid

left in place.

Note:
For HI-TRAC VW Version V2, the HI-TRAC VW is unfastened and removed from the NSC Assembly only after filling of the MPC with water (borated as required).

The top surfaces of the HI-TRAC VW and MPC are cleared of metal shavings. The inflatable annulus seal is installed and pressurized. The MPC lid is rigged to the lift yoke and the lift yoke is engaged to HI-TRAC VW lift blocks. If weight limitations require, the neutron shield jacket is drained of water or the NSC is unbolted from the HI-TRAC. HI-TRAC VW is placed in the spent fuel pool and the MPC lid is removed. All fuel assemblies are returned to the spent fuel storage racks and the MPC fuel cells are cleared of any assembly debris and crud. HI-TRAC VW and MPC are returned to the designated preparation area where the MPC water is removed. The annulus water is drained and the MPC and overpack are decontaminated.

9.4.2 HI-STORM FW Recovery from Storage

1. Recover the MPC from HI-STORM FW as follows:

   k. Perform a transport route walkdown to ensure that the cask transport conditions are met.

   l. Transfer HI-STORM FW to the fuel building or site designated location for the MPC transfer.

   m. Position HI-STORM FW under the lifting device.

   n. Remove the HI-STORM FW lid.

   o. Install the mating device with bottom lid on top of the HI-STORM FW.

   p. Remove the MPC lift attachment plugs and install the MPC lift rigging to the MPC lid.

2. At the site's discretion, perform a HI-TRAC VW receipt inspection and cleanliness inspection in accordance with a site-specific inspection checklist.

Note:
If the HI-TRAC VW is expected to be operated in an environment below 32 ^{o}F, the water jacket shall be filled with an ethylene glycol solution (25% ethylene glycol). Otherwise, the jacket shall be filled with demineralized water.

3. If previously drained, fill the neutron shield jacket with plant demineralized water or an ethylene glycol solution (25% ethylene glycol) as necessary. Ensure that the fill and drain plugs are installed.

4. Engage the lift yoke to HI-TRAC VW.
5. Align HI-TRAC VW over HI-STORM FW and mate the overpacks.

Warning:
A HI-TRAC VW Version V or V2 containing an MPC loaded with spent fuel assemblies shall NOT be left unattended when the MPC does not contain water. The HI-TRAC vents shall be monitored to be free from blockage once every 4 hours.

6. Disconnect the bottom lid and open the mating device drawer.
7. Attach the ends of the MPC sling to the lifting device.
8. Raise the MPC into HI-TRAC VW.
9. Verify the MPC is in the full-up position.
10. Close the mating device.
11. Attach the bottom lid to the HI-TRAC VW.
12. Lower the MPC onto the bottom lid.
13. Disconnect the MPC lift rigging from the MPC lid.
14. Remove HI-TRAC VW from the top of the HI-STORM FW.

Note:

When placing the loaded HI-TRAC VW Version V2 on the floor of cask preparation area or on top of a transporter, a shield ring pedestal is required to support the NSC.

ALARA Warning:

When transferring the HI-TRAC VW V2 (HI-TRAC and NSC) to the mating device, the exposed region of HI-TRAC below the NSC will have higher dose rates.

9.4.3 Preparation for Unloading

1. Prepare for MPC cool-down as follows:

Warning:
At the start of annulus filling, the annulus fill water may flash to steam due to high MPC shell temperatures. Users may select the location and means of performing the annulus fill. Users may also elect the source of water for the annulus. Water addition should be performed in a slow and controlled manner until water steam generation has ceased. Ensure vent seal is inflated prior to filling the annulus with water.

2. If necessary, set the annulus water level to approximately 4 inches below the top of the MPC shell and install the annulus shield. Cover the annulus and HI-TRAC VW top surfaces to protect them from debris produced when removing the MPC lid weld.

3. Access the MPC as follows:

ALARA Note:
The following procedures describe weld removal using a machine tool head. Other methods may also be used. The metal shavings may need to be periodically removed.

ALARA Warning:
Weld removal may create an airborne radiation condition. Weld removal must be performed under the direction of the user's Radiation Protection organization.

a. Using the marked locations of the vent and drain ports, core drill the closure ring and port cover plates.

b. Remove the closure ring sections and the vent and drain port cover plates.

ALARA Note:
The MPC vent and drain ports are equipped with metal-to-metal seals to minimize leakage and withstand the long-term effects of temperature and radiation. The vent and drain port design prevents the need to hot tap into the penetrations during unloading operation and eliminate the risk of a pressurized release of gas from the MPC.

4. Take an MPC gas sample as follows:

Note:
Users may select alternate methods of obtaining a gas sample.

a. Attach the RVOAs.

b. Attach a sample bottle to the vent port RVOA.

c. Evacuate the RVOA and Sample Bottle.

d. Slowly open the vent port cap using the RVOA and gather a gas sample from the MPC internal atmosphere.

e. Close the vent port cap and disconnect the sample bottle.

than 90 psi. (Refer to LCO 3.3.1 for boron concentration requirements). Fill the MPC until bubbling from the vent line has terminated. Close the water supply valve on completion.

d. Disconnect both lines from the drain and vent ports leaving the drain port cap open to allow for thermal expansion of the water during MPC lid weld removal.

Caution:
A radiolysis of water may occur in high flux conditions inside the MPC creating combustible gases. Appropriate monitoring for combustible gas concentrations shall be performed prior to, and during MPC lid removal operations. The space below the MPC lid shall be purged with inert gas prior to, and during MPC lid removal operations, including grinding, and other hot work, to provide additional assurance that flammable gas concentrations will not develop in this space.

e. Connect a combustible gas monitor to the MPC vent port and check for combustible gas concentrations prior to and periodically during weld removal activities. Purge the gas space under the lid as necessary.

f. Remove the MPC lid-to-shell weld using the weld removal system.

g. Remove any metal shavings from the top surfaces of the MPC and HI-TRAC VW.

6. Install inflatable annulus seal.

7. Place HI-TRAC VW in the spent fuel pool as follows:

a. If necessary for plant weight limitations, drain the water from the neutron shield jacket. For HI-TRAC VW Version V2, unbolt the HI-TRAC VW from the NSC.

b. Engage the lift yoke to HI-TRAC VW lifting blocks, remove the MPC lid lifting plugs and attach the MPC lid slings.

c. Position HI-TRAC VW into the spent fuel pool in accordance with site-approved rigging procedures.

d. Disengage the lift yoke. Visually verify that the lift yoke is fully disengaged.

e. Remove the lift yoke, MPC lid and drain line from the pool in accordance with directions from the site's Radiation Protection personnel.

f. Disconnect the drain line from the MPC lid.

g. Store the MPC lid components in an approved location. Disengage the lift yoke from MPC lid.

9.4.4 MPC Unloading

1. Remove the spent fuel assemblies from the MPC using applicable site procedures. If used, the top DFI will be removed using special handling tools, in order to remove the spent fuel assembly in the cell.

2. Remove any debris or corrosion products from the MPC cells. If used, the bottom DFI may be removed using special handling tools.

9.4.5 Post-Unloading Operations

1. Remove HI-TRAC VW and the unloaded MPC from the spent fuel pool as follows:

   a. Engage the lift yoke to the HI-TRAC VW lift blocks.

   b. Apply slight tension to the lift yoke and visually verify proper engagement of the lift yoke to the lift blocks.

   c. Raise HI-TRAC VW until HI-TRAC VW flange is at the surface of the spent fuel pool.

ALARA Warning:
Activated debris may have settled on the top face of HI-TRAC VW during fuel unloading.

   d. Measure the dose rates at the top of HI-TRAC VW in accordance with plant radiological procedures and flush or wash the top surfaces to remove any highly-radioactive particles.

   e. Raise the top of HI-TRAC VW and MPC to the level of the spent fuel pool deck.

   f. Close the annulus overpressure system reservoir valve, if used.

   g. Lower the water level in the MPC approximately 12 inches to prevent splashing during cask movement.

ALARA Note:
To reduce contamination of HI-TRAC VW, the surfaces of HI-TRAC VW and lift yoke should be kept wet until decontamination can begin.

   h. Remove HI-TRAC VW from the spent fuel pool under the direction of radiation protection personnel.

   i. Disconnect the annulus overpressure system from the HI-TRAC VW.

   j. Place HI-TRAC VW in the designated preparation area.

   k. Disengage the lift yoke.

   l. Perform decontamination on HI-TRAC VW and the lift yoke.

Code, Section III, Subsection NB, Article NB-5350 acceptance criteria. Any evidence of cracking or deformation shall be cause for rejection, or repair and retest, as applicable.

If a leak is discovered, the test pressure shall be reduced, the MPC cavity water level lowered, if applicable, the MPC cavity vented, and the weld shall be examined to determine the cause of the leakage and/or cracking. Repairs to the weld shall be performed in accordance with written and approved procedures prepared in accordance with the ASME Code, Section III, Article NB-4450.

The MPC confinement boundary pressure test shall be repeated until all required examinations are found to be acceptable. Test results shall be documented and maintained as part of the loaded MPC quality documentation package.

10.1.3 Materials Testing

The majority of materials used in the HI-TRAC transfer cask and a portion of the material in the HI-STORM overpack are ferritic steels. ASME Code, Section II and Section III require that certain materials be tested in order to assure that these materials are not subject to brittle fracture failures. Certain versions of the HI-TRAC include Holtite neutron shielding material.

Materials of the HI-TRAC transfer cask and HI-STORM overpack, as required, shall be Charpy V-notch tested in accordance with ASME Section IIA and/or ASME Section III, Subsection NF, Articles NF-2300, and NF-2430. The materials to be tested are identified in Table 3.1.9 and applicable weld materials. Table 3.1.9 provides the test temperatures and test acceptance criteria to be used when performing the material testing specified above.

For Holtite neutron shielding material, each manufactured lot of material shall be tested to verify the material composition (aluminum and hydrogen), boron concentration, and neutron shield density (or specific gravity) meet the requirements specified in Table 1.2.5. Appendix 1.B of HI-STORM 100 System FSAR [1.1.3] provides the Holtite-A material properties germane to its function as a neutron shield. A manufactured lot is defined as the total amount of material used to make any number of mixed batches comprised of constituent ingredients from the same lot/batch identification numbers supplied by the constituent manufacturer. Testing shall be performed in accordance with written and approved procedures and/or standards. Material composition, boron concentration, and density (or specific gravity) data for each manufactured lot of neutron shield material shall become part of the quality documentation package. The procedures shall ensure that mix ratios and mixing methods are controlled in order to achieve proper material composition, boron concentration and distribution, and that pours are controlled in order to prevent gaps from occurring in the material. Samples of each manufactured lot of neutron shield material shall be maintained by Holtec International as part of the quality record documentation package.

The concrete utilized in the construction of the HI-STORM overpack shall be mixed, poured, and tested as set down in Chapter 1.D of the HI-STORM 100 FSAR (Docket 72-1014) [10.1.6] in accordance with written and approved procedures. Testing shall verify the compressive strength

10.1.6 Shielding Integrity

The HI-STORM FW overpack and MPC have two designed shields for neutron and gamma ray attenuation. The HI-STORM FW overpack concrete provides both neutron and gamma shielding. The overpack's inner and outer steel shells, and the steel shield shell, provide radial gamma shielding. Concrete and steel plates provide axial neutron and gamma shielding.

The HI-TRAC VW transfer cask uses three different materials for primary shielding. All HI-TRAC VW transfer cask designs include a radial steel-lead-steel shield and a removable steel bottom lid. Testing requirements on shielding materials are presented below.

Concrete:

The dimensions of the HI-STORM overpack steel shells and the density of the concrete shall be verified to be in accordance with FSAR drawings in Section 1.5 prior to concrete installation. The dimensional inspection and density measurements shall be documented. Also, see Subsection 10.1.3 for concrete material testing requirements.

Holtite:

For transfer cask versions that utilize Holtite shielding material the installation of the neutron shielding material shall be performed in accordance with written and qualified procedures. Also, see Subsection 10.1.3 for concrete material testing requirements.

Lead:

The installation of the lead in the HI-TRAC transfer cask shall be performed using written and qualified procedures in order to ensure that voids are minimized. The lead shall be examined to preclude macrovoids (through holes) in the material using written and qualified procedures.

The lead shall be installed in such a manner that there are no macro-voids (through holes) and that the cask is not subjected to a severe thermal cycle.

Steel:

Steel plates utilized in the construction of the HI-STORM FW system shall be dimensionally inspected to assure compliance with the requirements specified on the Design Drawings.

General Requirements for Shield Materials:

1. Test results for concrete density and lead examinations for macrovoids, as applicable, shall be documented and become part of the quality documentation package.

Table 10.1.2 (continued)
HI-STORM FW OVERPACK INSPECTION AND TEST ACCEPTANCE CRITERIA

Function	Fabrication	Pre-operation	Maintenance and Operations
Visual Inspection and Nondestructive Examination (NDE) (continued)	General: a) Cleanliness of the overpack shall be verified upon completion of fabrication. b) Packaging of the overpack at the completion of shop fabrication shall be verified prior to shipment.		
Structural	a) Verification of structural materials shall be performed through receipt inspection and review of certified material test reports (CMTRs) obtained in accordance with the item's quality category. b) Concrete compressive strength tests shall be performed per Appendix 1.D of [10.1.6].	a) No structural or pressure tests are required for the overpack during pre-operation.	a) No structural or pressure tests are required for the overpack during operation.
Leak Tests	a) None.	a) None.	a) None.
Criticality Safety	a) No neutron absorber tests of the overpack are required for criticality safety during fabrication.	a) None.	a) None.
Shielding Integrity	a) Concrete density shall be verified per Table 1.2.5 of this FSAR and Appendix 1.D of [10.1.6], at time of placement. b) Shell thicknesses and dimensions between inner and outer shells shall be verified as conforming to design drawings prior to concrete placement.	a) None	a) A shielding effectiveness test shall be performed after the initial fuel loading.

11.1.3 Operational Considerations

Operational considerations that most directly influence occupational exposures with dry storage systems in general and that have been incorporated into the design of the HI-STORM FW system include:

- totally-passive design requiring minimal maintenance and monitoring (other than security monitoring) during storage;
- remotely operated welding system, lift yoke, mating device and moisture removal systems to reduce time operators spend in the vicinity of the loaded MPC;
- use of a well-shielded base for staging the welding system;
- maintaining water in the MPC and the annulus region during MPC closure activities to reduce dose rates;
- low fuel assembly lift-over height over the HI-TRAC VW maximizes water coverage over assemblies during fuel assembly loading;
- a water-filled neutron shield jacket allows filling after removal of the HI-TRAC VW from the spent fuel pool. This maximizes the shielding on the HI-TRAC VW without exceeding the crane capacity;
- for the HI-TRAC VW Version V2, a Holtite-A filled neutron shield cylinder is attached after removal of the HI-TRAC VW from the spent fuel pool. This maximizes the shielding on the HI-TRAC VW Version V2 without exceeding the crane capacity;
- descriptive operating procedures that provide guidance to reduce equipment contamination, obtain survey information, minimize dose and alert workers to possible changing radiological conditions;
- preparation and inspection of the HI-STORM FW overpack and HI-TRAC VW in low-dose areas;
- MPC lid fit tests and inspections prior to actual loading to ensure smooth operation during loading;
- gas sampling of the MPC and HI-STAR 100 annulus (receiving from transport) to assess the condition of the cladding and MPC Confinement Boundary;
- HI-STORM FW overpack temperature monitoring equipment allows remote monitoring of the vent operability surveillance;
- Use of proven ALARA measures such as wetting of component surfaces prior to placement in the spent fuel pool to reduce the need for decontamination;
- decontamination practices which consider the effects of weeping during HI-TRAC VW transfer cask heat up and surveying of HI-TRAC VW prior to removal from the fuel handling building;

11.3 ESTIMATED ON-SITE CUMULATIVE DOSE ASSESSMENT

This section provides the estimates of the cumulative exposure to personnel performing loading, unloading and transfer operations using the HI-STORM FW system. This section uses the shielding analysis provided in Chapter 5, and the operations procedures provided in Chapter 9.

The dose rates from the HI-STORM FW overpack, MPC lid, and HI-TRAC VW are calculated to determine the dose to personnel during the fuel loading and unloading operations. No assessment is made with respect to background radiation since background radiation can vary significantly by site.

The estimated occupational dose is governed by three principal parameters, namely:

i. The dose rate emanating from the MPC.
ii. Average duration of human activity in the radiation elevated space.
iii. Relative proximity of humans to the radiation source.

The dose rate accreted by the MPC depends on its contents. Regionalized storage has been made mandatory in the HI-STORM FW MPC-37 to reduce its net radiation output. The duration of required human activity and the required human proximity, on the other hand, are dependent on the training level of the personnel, and user friendliness of ancillary equipment and the quality of fit-up of parts that need to be assembled in the radiation field.

To provide a uniform basis for the dose estimates presented in this chapter, the MPC contents data considered, available HI-TRAC VW weight, etc., are set down in Table 11.3.1.

Apart from the operational considerations, the assumptions with regards to the cask content have a significant impact on the estimated dose. Two cask loading scenarios are evaluated and documented here, both very conservative, i.e. in an attempt to indicate what the highest expected dose rates could possibly be. The scenarios are selected as follows:

- The first scenario uses the representative uniform fuel loading discussed in Section 5.4.3. This is loading is conservative, but not bounding. It is conservative since it represents a total cask decay heat load that exceeds the value that is permitted for the cask. But is not bounding, since it utilizes only a single burnup and cooling time combination, and even for the same heat load, there could be other combinations that could result in slightly higher dose rates. Cask dose rates corresponding to this scenarios are documented in Section 5.4, Tables 5.4.11 through 5.4.16. The dose rates reported in this chapter for this scenario are directly calculated using the representative fuel loading.

- The second scenario is truly bounding from a content perspective. It is based on the full evaluations of the regionalized loading scenarios with the bounding cask dose rates presented in Chapter 5. The dose rates reported in this chapter for this scenario are directly calculated using the bounding fuel loading. In order to estimate the realistic, though still bounding,

occupational dose, the calculated values are additionally adjusted using the scaling factor. This scaling factor is established as a ratio of the technical specification limit for the side surface dose rate for HI-TRAC transfer cask (3.5 rem/hr) and the maximum calculated dose rate at this location, and it is provided in Table 11.3.1.

It is to be noted that both scenarios represent rather extreme cases. Practical experience from the many casks loaded so far show that dose rates significantly below those shown here can be achieved. This not so much the result of a less bounding content of the canisters, but the result of operational improvements of the loading process that reduce durations of the presence of workers near the casks, that increase the distance to the cask areas with higher dose rates, and the use of temporary shielding.

Using Table 11.3.1 data, the dose data for fuel loading (wet to dry storage) is provided in Table 11.3.2.

For each step in Table 11.3.2, the task description, average number of personnel in direct radiation field, exposure duration in direct radiation field and average dose rate are identified. The relative locations refer to all HI-STORM FW overpacks. The dose rate location points around the transfer cask and overpack were selected based on actual experience in loading HI-STORM 100 Overpacks. Cask operators typically work with workers entering and exiting the immediate cask area. To account for this, an average number of workers and average dose rates are used. The tasks involved in each step presented in Table 11.3.2 are not provided in any specific order.

11.3.1 Estimated Exposures for Loading and Unloading Operations

Exposures estimates presented in Tables 11.3.2 is expected to bound those for unloading operations. This assessment is based on the similarity of many loading steps versus unloading operations with the elimination of several of the more dose intensive operations (such as weld inspections and leakage testing). Therefore, loading estimates should be viewed as bounding values for the contents considered for unloading operations.

11.3.2 Estimated Exposures for Surveillance and Maintenance

Table 11.3.3 provides an estimate of the occupational exposure required for security surveillance and maintenance of an ISFSI. Security surveillance time is based on a daily security patrol around the perimeter of the ISFSI security fence. Users may opt to utilize electronic temperature monitoring of the HI-STORM FW modules or remote viewing methods instead of performing direct visual observation of the modules. The security surveillances can be performed from outside the ISFSI, and the ISFSI fence is typically positioned such that the area outside the fence is not a radiation area. Although the HI-STORM FW system requires only minimal maintenance during storage (e.g., touch-up paint), maintenance will be required around the ISFSI for items such as security equipment maintenance, grass cutting, snow removal, vent system surveillance, drainage system maintenance, and lighting, telephone, and intercom repair, hence most of the maintenance is expected to occur outside the actual cask array.

Table 11.3.1 ASSUMED PARAMETERS FOR DOSE ESTIMATE UNDER SHORT-TERM OPERATIONS AND UNDER LONG-TEM STORAGE		
	Item	**Value**
1.	**MPC-Contents (MPC-37)[1]**	**Representative: 45,000 MWD/MTU and 4.5 years** **Scaling Factor[2] for bounding content:** **0.593**
2.	**Weight of HI-TRAC VW Full of Fuel and Water**	**125 tons**
3.	**HI-STORM Concrete Density**	**150 lb/cubic feet**

[1] The case of MPC-37 is used but similar results are expected for all MPC types.
[2] TS limit divided by the dose rate at Table 5.1.2b, surface dose location #2, i.e. 3500 / 5898.2 = 0.593.

TABLE 11.3.2: ESTIMATED PERSON-MREM DOSE FOR LOADING THE HI-STORM FW SYSTEM				
Task Description (See Chapter 9 for detailed description of operations)	**Average Number of Personnel in Direct Radiation Field**	**Exposure Duration in Direct Radiation Field (mins)**	**Average/ Bounding Dose Rate at worker location (mrem/hr)**	**Exposure Representative / Bounding (mrem)**
Fuel loading and removal of the transfer cask and MPC from the spent fuel pool (includes: fuel loading, fuel assembly identification check, MPC lid installation, Lift Yoke attachment to the HI-TRAC VW, HI-TRAC VW removal from the spent fuel pool, preliminary decontamination, HI-TRAC VW movement to the DAS, Lift Yoke removal and decontamination. Background radiation of 1 mrem/hr assumed.	3	800	1.0 / 1.0	40.0 / 40.0
MPC preparation for closure (includes: HI-TRAC VW and MPC decontamination, radiation surveys, partial MPC pump down, annulus seal removal, partial lowering of annulus water level, annulus shield ring installation, weld system installation); workers assumed to be on scaffolding near the top of the HI-TRAC.	3	30	55.7 / 118.6	83.5 / 177.8

TABLE 11.3.2: ESTIMATED PERSON-MREM DOSE FOR LOADING THE HI-STORM FW SYSTEM				
Task Description (See Chapter 9 for detailed description of operations)	**Average Number of Personnel in Direct Radiation Field**	**Exposure Duration in Direct Radiation Field (mins)**	**Average/ Bounding Dose Rate at worker location (mrem/hr)**	**Exposure Representative / Bounding (mrem)**
MPC Closure (includes MPC lid to shell welding, weld inspection). Assumes welding machine uses standard Holtec pedestal which provides additional shielding. Holtec auxiliary shielding methods and equipment assumed. Assumes operators are present for 10% of the total duration.	2	185	55.7 / 118.6	34.3 / 73.1
MPC Preparation for Storage (includes: MPC hydrostatic testing, draining, drying and backfill, vent and drain port cover plate installation, welding, weld inspection and leakage testing). Holtec auxiliary shielding methods and equipment assumed. Assumes operators are present for 20% of the total duration.	2	170	175.4 / 339.7	198.7 / 385.0
MPC Closure Ring Installation (includes: closure ring to MPC shell welding, weld inspection and leakage testing of the MPC primary closure). Holtec auxiliary shielding methods and equipment assumed (lead blankets, water shields, etc.) Assumes operators are present for 10% of the total duration.	2	80	229.4 / 952.0	61.2 / 253.9

TABLE 11.3.2: ESTIMATED PERSON-MREM DOSE FOR LOADING THE HI-STORM FW SYSTEM				
Task Description (See Chapter 9 for detailed description of operations)	**Average Number of Personnel in Direct Radiation Field**	**Exposure Duration in Direct Radiation Field (mins)**	**Average/ Bounding Dose Rate at worker location (mrem/hr)**	**Exposure Representative / Bounding (mrem)**
HI-STORM FW system preparation for receiving MPC (includes: HI-STORM FW overpack positioning at transfer location, HI-STORM lid removal, Mating Device installation on HI-STORM FW overpack).	3	160	0 / 0	0 / 0
MPC Transfer (attachment of MPC lifting device, movement of HI-TRAC VW to transfer location, placement of HI-TRAC VW in Mating Device, bottom lid removal, MPC lowering, HI-TRAC VW removal, MPC lift device removal). Holtec auxiliary shielding methods and equipment assumed. Assumes operators are present for 10% of the total duration.	3	120	148 / 790.3	88.8 / 474.2
HI-STORM FW overpack movement to the ISFSI (will include: movement of the HI-STORM FW overpack from the fuel building to placement of the HI-STORM FW overpack on the ISFSI pad, disconnecting transporter, attachment of HI-STORM FW lid, attachment of thermal monitoring system). Holtec auxiliary shielding methods and equipment assumed. Assumes operators are present for 50% of the total duration.	3	220	37.3 / 45.0	205.2 / 247.6

TABLE 11.3.2: ESTIMATED PERSON-MREM DOSE FOR LOADING THE HI-STORM FW SYSTEM				
Task Description (See Chapter 9 for detailed description of operations)	**Average Number of Personnel in Direct Radiation Field**	**Exposure Duration in Direct Radiation Field (mins)**	**Average/ Bounding Dose Rate at worker location (mrem/hr)**	**Exposure Representative / Bounding (mrem)**
TOTAL EXPOSURE (person-mrem)				711.6 / 1651.6

system shielding effectiveness. Therefore, the dose at the controlled area boundary from direct radiation for off-normal conditions is equal to that of normal conditions.

11.4.3 Controlled Area Boundary Dose for Accident Conditions

10CFR72.106 [11.0.1] specifies the maximum doses allowed to any individual at the controlled area boundary from any design basis accident (See Subsection 11.1.2). In addition, it is specified that the minimum distance from the ISFSI to the controlled area boundary be at least 100 meters.

Chapter 12 presents the results of the evaluations performed to demonstrate that the HI-STORM FW system can withstand the effects of all accident conditions and natural phenomena without the corresponding radiation doses exceeding the requirements of 10CFR72.106 [11.0.1]. The accident events addressed in Chapter 12 include: handling accidents, tip-over, fire, tornado, flood, earthquake, 100 percent fuel rod rupture, Confinement Boundary leakage, explosion, lightning, burial under debris, extreme environmental temperature, and blockage of MPC basket air inlets.

The worst-case shielding consequence of the accidents evaluated in Chapter 12 for the loaded HI-STORM FW overpack assumes that as a result of a fire, the outer-most one inch of the concrete experiences temperatures above the concrete's design temperature. Therefore, the shielding effectiveness of this outer-most one inch of concrete is degraded. However, with the available concrete providing shielding, the loss of one inch will have a negligible effect on the dose at the controlled area boundary.

The worst case shielding consequence of the accidents evaluated in Chapter 12 for the loaded HI-TRAC VW transfer cask assumes that as a result of a fire, tornado missile, or handling accident, that all the water in the water jacket is lost or that all Holtite-A in the Neutron Shield Cylinder is lost. The shielding analysis of the HI-TRAC VW with complete loss of the water from the water jacket is discussed in Subsection 5.1.1. Loss of water from the water jacket bounds the loss of Holtite-A in the Neutron Shield Cylinder in the HI-TRAC VW Version V2 since the total radial thickness of steel and lead is slightly greater in the HI-TRAC Version V2 compared to the standard HI-TRAC VW. The results in that subsection show the resultant dose rate at the 100-meter controlled area boundary during the accident condition. At the calculated dose rate, Table 5.1.9 shows the calculated time to reach 5 rem. This length of time is sufficient to implement and complete the corrective actions outlined in Chapter 12. Therefore, the dose requirement of 10CFR72.106 [11.0.1] is satisfied. Users will need to perform site-specific analysis considering the actual site boundary distance and fuel characteristics.

CHAPTER 12†: ACCIDENT ANALYSIS

12.0 INTRODUCTION

This chapter presents the evaluation of the HI-STORM FW System for the effects of off-normal and postulated accident conditions; and other scenarios that warrant safety analysis (such as MPC reflood during fuel unloading operations), pursuant to the guidelines in NUREG-1536. The design basis off-normal and postulated accident events, including those based on non-mechanistic postulation as well as those caused by natural phenomena, are identified. For each postulated event, the event cause, means of detection, consequences, and corrective actions are discussed and evaluated. For other miscellaneous events (i.e., those not categorized as either design basis off-normal or accident condition events), a similar outline for safety analysis is followed. As applicable, the evaluation of consequences includes the impact on the structural, thermal, shielding, criticality, confinement, and radiation protection performance of the HI-STORM FW System due to each postulated event.

The structural, thermal, shielding, criticality, and confinement features and performance of the HI-STORM FW System under the short-term operations and various conditions of storage are discussed in Chapters 3, 4, 5, 6, and 7. The evaluations provided in this chapter are based on the design features and analyses reported therein.

It should be noted that HI-TRAC VW evaluations in this chapter are for HI-TRAC VW with a water jacket. These evaluations are also valid for HI-TRAC VW Version V2 which uses a neutron shield cylinder (instead of water jacket), which employs Holtite-A for neutron shielding in lieu of water jacket and water. Because of this similarity and for clarity purposes, HI-TRAC VW Version V2 is not explicitly discussed further in this chapter.

Chapter 12 is in full compliance with NUREG-1536; no exceptions are taken.

† This chapter has been prepared in the format and section organization set forth in Regulatory Guide 3.61. However, the material content of this chapter also fulfills the requirements of NUREG-1536. Pagination and numbering of sections, figures, and tables are consistent with the convention set down in Chapter 1, Section 1.0, herein. Finally, all terms-of-art used in this chapter are consistent with the terminology of the Glossary.

temperature. Therefore, there will be no degradation of the concrete's shielding effectiveness. The elevated temperatures will not cause a breach of the confinement system and the short-term fuel cladding temperature is not exceeded. Therefore, there is no radiological impact on the HI-STORM FW System for the extreme environmental temperature and the dose calculations are to the same as those for normal condition dose rates.

12.2.15.4 Extreme Environmental Temperature Corrective Action

There are no consequences of this accident that require corrective action.

12.2.16 100% Blockage of HI-TRAC VW Version V or V2 Air Vents

12.2.16.1 Cause of 100% Blockage of HI-TRAC VW Version V or V2 Air Vents

This event is defined as 100% blockage of air flow through the HI-TRAV VW Version V or V2 air vents. The inlet flow vents in the HI-TRAC are not discrete vent; rather they are radially symmetric passages. The outlet is an essentially an unhindered opening to ambient air above the cask. It is not credible to postulate that these passages can be entirely blocked; however, this event is evaluated as a defense in depth approach.

12.2.16.2 100% Blockage of HI-TRAC VW Version V or V2 Air Vents Analysis

The immediate consequence of a blockage of the air inlet and/or outlet openings is that the normal circulation of air for cooling the MPC is reduced. An amount of heat will continue to be removed by localized air circulation patterns in the overpack annulus, and the MPC will continue to radiate heat to the relatively cooler transfer cask. As the temperatures of the MPC and its contents rise, the rate of heat rejection will increase correspondingly. Under this condition, the temperatures of the HI-TRAC VW Version V or V2 transfer cask, the MPC and the stored fuel assemblies will rise as a function of time.

As a result of the considerable inertial of the TRANSFER CASK, a significant temperature rise is possible if the inlets are substantially blocked for extended durations. This accident condition is a short duration event that will be identified by the ISFSI staff, at worst, during scheduled periodic surveillance and corrected using the site's ISFSI operating procedures. The TRANSFER CASK is not left unattended and any blockage is expected to be recognized within a short period of time.

i. Structural

There are no structural consequences as a result of this event.

ii. Thermal

A thermal analysis is performed in Subsection 4.6.2 to determine the effect of a complete

blockage of all inlets for an extended duration. For this event, a significant temperature rise is possible if the inlet or outlet vents are substantially blocked for extended durations. For this event, both the fuel cladding and component temperatures remain below their accident temperature limits. The MPC internal pressure for this event is evaluated in Subsection 4.6.2 and is bounded by the design basis internal pressure for accident conditions (Table 2.2.1).

iii. Shielding

There is no effect on the shielding performance of the system as a result of this event, since the shielding component temperatures remain below their design accident limits provided in Table 2.2.3.

iv. Criticality

There is no effect on the criticality control features of the system as a result of this event.

v. Confinement

There is no effect on the confinement function of the MPC as a result of this event.

vi. Radiation Protection

Since there is no degradation in shielding or confinement capabilities as discussed above, there is no effect on occupational or public exposures as a result of this event.

Based on the above evaluation, it is concluded that the 100% blockage of HI-TRAC VW Version V or V2 air inlets accident does not affect the safe operation of the HI-TRAC transfer casks, as the plant's emergency response process required to act to remove the blockage is the first priority activity.

12.2.16.3 100% Blockage of HI-TRAC VW Version V or V2 Air Inlets Dose Calculations

As shown in the analysis of the 100% blockage of air inlets accident, the shielding capabilities of the HI-TRAC VW Version V or V2 cask are unchanged because the shielding material's peak temperatures do not exceed its accident condition design temperature. The elevated temperatures will not cause the breach of the confinement system and the accident fuel cladding temperature limit is not exceeded. Therefore, there is no radiological impact.

12.2.16.4 100% Blockage of HI-TRAC VW Version V or V2 Air Vents Accident Corrective Action

Analysis of the 100% blockage of air inlet and/or outlet accident shows that the temperatures for cask system components and fuel cladding are within the accident temperature limits if the blockage is cleared within the maximum elapsed period between scheduled surveillance inspections. Upon

detection of the complete blockage of the air vent openings, the plant owner shall activate its emergency response procedure to remove the blockage with mechanical and manual means as necessary. After clearing the cask openings, the cask shall be visually and radiologically inspected for any damage.

For an accident event that completely blocks the air vents for greater than the analyzed duration, a site-specific evaluation or analysis may be performed to whether adequate heat removal for the duration of the event would occur. Adequate heat removal is defined as the minimum rate of heat dissipation that ensures cladding temperatures limits are met and structural integrity of the MPC and overpack is not compromised. For those events where an evaluation or analysis is not performed or is not successful in showing that cladding temperatures remain below their short term temperature limits, the site's emergency plan shall include provisions to address removal of the material blocking the air inlet openings and to provide alternate means of cooling prior to exceeding the time when the fuel cladding temperature reaches its short-term temperature limit. Alternate means of cooling could include, for example, spraying water into the air outlet opening using pumps or fire-hoses or blowing air into the air outlet opening, to directly cool the MPC.

Table 13.1.1

HI-STORM FW SYSTEM CONTROLS

Condition to be Controlled	**Applicable Technical Specifications**†
Criticality Control	3.3.1 Boron Concentration
Confinement boundary integrity and integrity of cladding on undamaged fuel	3.1.1 Multi-Purpose Canister (MPC)
Shielding and radiological protection	3.1.1 Multi-Purpose Canister (MPC) 3.1.3 MPC Reflooding 3.2.1 TRANSFER CASK Surface Contamination 5.1 Radioactive Effluent Control Program 5.3 Radiation Protection Program
Heat removal capability	3.1.1 Multi-Purpose Canister (MPC) 3.1.2 SFSC Heat Removal System 3.1.4 TRANSFER CASK Heat Removal System
Structural integrity	5.2 Transport Evaluation Program

† Technical Specifications are located in Appendix A to the CoC. Authorized contents are specified in this FSAR in Subsection 2.1.8

Table 13.1.2 HI-STORM FW SYSTEM TECHNICAL SPECIFICATIONS	
NUMBER	**TECHNICAL SPECIFICATION**
1.0	USE AND APPLICATION
1.1	DEFINITIONS
1.2	LOGICAL CONNECTORS
1.3	COMPLETION TIMES
1.4	FREQUENCY
2.0	Not Used
3.0	LIMITING CONDITION FOR OPERATION (LCO) APPLICABILITY SURVEILLANCE REQUIREMENT (SR) APPLICABILITY
3.1	SFSC Integrity
3.1.1	Multi-Purpose Canister (MPC)
3.1.2	SFSC Heat Removal System
3.1.3	Fuel Cool-Down
3.1.4	TRANSFER CASK Heat Removal System
3.2	SFSC Radiation Protection
3.2.1	TRANSFER CASK Surface Contamination
3.3	SFSC Criticality Control
3.3.1	Boron Concentration
Table 3-1	MPC Cavity Drying Limits
Table 3-2	MPC Helium Backfill Limits
4.0	Not Used
5.0	ADMINSTRATIVE CONTROLS
5.1	Radioactive Effluent Control Program
5.2	Transport Evaluation Program
5.3	Radiation Protection Program

BASES TABLE OF CONTENTS

B 3.1 SFSC Integrity

B 3.1.4 TRANSFER CASK Heat Removal System

BASES	
BACKGROUND	The HI-TRAC VW Version V or V2 Heat Removal System is a passive, air-cooled, convective heat transfer system that ensures heat from the MPC canister is transferred to the environs by the chimney effect. Relatively cool air is drawn into the annulus between the TRANSFER CASK and the MPC through the inlet air ducts. The MPC transfers its heat from the canister surface to the air via natural convection. The buoyancy created by the heating of the air creates a chimney effect and the air is forced back into the environs through the outlet air ducts at the top of the TRANSFER CASK.
APPLICABLE SAFETY ANALYSIS	The thermal analyses of the HI-TRAC VW Version V or V2 take credit for the decay heat from the spent fuel assemblies being ultimately transferred to the ambient environment surrounding the TRANSFER CASK. Transfer of heat away from the fuel assemblies ensures that the fuel cladding and other TRANSFER CASK component materials temperatures do not exceed applicable limits. Under normal transfer conditions, the inlet air ducts are unobstructed and full air flow (i.e., maximum heat transfer for the given ambient temperature) occurs. Any blockage of the inlet air ducts reduces normal air cooling of the MPC. The MPC will continue to radiate heat to the relatively cooler TRANSFER CASK. With the reduction or loss of normal air cooling, the fuel temperature and TRANSFER CASK component materials temperatures will increase toward their respective short-term temperature limits. To prevent the fuel cladding from reaching temperature limits over the duration of the analyzed event, time limits for removal of the blockage are implemented with the LCO.

(continued)

BASES	
LCO	The HI-TRAC VW Version V or V2 Heat Removal System must be verified to be operable to preserve the assumptions of the thermal analyses. Operability is defined as 100% of the inlet and outlet air ducts available for air flow (i.e., unblocked). Operability of the heat removal system ensures that the decay heat generated by the stored fuel assemblies is transferred to the environs at a sufficient rate to maintain fuel cladding and other TRANSFER CASK component materials temperatures within design limits. The intent of this LCO is to address air duct blockage that can be reasonably anticipated to occur. (i.e., Design Event I and II class events per ANSI/ANS-57.9). These events are of the type where corrective actions can usually be accomplished within one 8-hour operating shift to restore the heat removal system to operable status (e.g., removal of loose debris). This LCO is not intended to address low frequency, unexpected Design Event III and IV class events (ANSI/ANS-57.9) such as design basis accidents and extreme environmental phenomena that could potentially block the air ducts for an extended period of time (i.e., longer than the total Completion Time of the LCO). This class of events is addressed site-specifically as required by Section 3.4.10 of Appendix B to the CoC.
APPLICABILITY	The LCO is applicable when a loaded MPC is in the HI-TRAC VW Version V or V2 TRANSFER CASK and MPC drying operations have completed. Once drying operations of a loaded MPC have completed, the TRANSFER CASK heat removal system must be operable to ensure adequate dissipation of the decay heat from the fuel assemblies.
ACTIONS	

(continued)

BASES

ACTIONS (continued)

A.1

The heat removal system is inoperable. The blockage should be cleared within 8 hours for Version V or Version V2 to remove the obstructions in the air flow path and maintain fuel temperature and TRANSFER CASK component materials temperatures within design limits. The Completion Time is consistent with the thermal analyses of this event, which show that fuel temperature and all TRANSFER CASK component materials temperatures remain below their accident temperature limits indefinitely for Version V and up to 16 hours after event initiation for Version V2.

B.1

If the heat removal system cannot be restored to operable status within the 64 hours for Version V or 8 hours for Version V2, the fuel or the TRANSFER CASK materials, may experience elevated temperatures. The fuel temperature accident limits will not be exceeded; however, the TRANSFER CASK component materials temperature limits may be exceeded with the heat removal system inoperable. Efforts must continue to restore the heat removal system to operable status by removing the air flow obstructions.

B.2

In addition to Required Action B.1, Supplemental Cooling to the TRANSFER CASK may be provided to protect the integrity of the TRANSFER CASK component materials. If the completion time has been exceeded, an engineering evaluation must be performed to determine if deterioration of the TRANSFER CASK component materials, which prevents it from performing its design function has occurred. If the evaluation is successful and the air flow obstructions have been cleared, the TRANSFER CASK heat removal system may be considered operable.

Transfer of the MPC into an OVERPACK removes the TRANSFER CASK from the LCO Applicability.

BASES	
SURVEILLANCE REQUIREMENTS	SR 3.1.4 The short-term integrity of the fuel in the HI-TRAC VW Version V or V2 is dependent on the ability of the TRANSFER CASK to reject heat from the MPC to the environment. Visual observation of all inlet and outlet air ducts are unobstructed ensures that air flow past the MPC is occurring and heat transfer is taking place. Any amount of blockage renders the heat removal system inoperable and this LCO is not met. The Frequency of 8 hours is reasonable, based on the time necessary for fuel cladding and TRANSFER CASK components to heat up to unacceptable temperatures, assuming design basis heat loads, and allowing for corrective actions to take place upon discovery of blockage of air ducts.
REFERENCES	1. FSAR Chapter 4 2. ANSI/ANS 57.9-1992