123 Main Street
White Plains, New York 10601
914 681.6240

New York Power Authority

John C. Brons
Executive Vice President
Nuclear Generation

November 16, 1989
JPN-89- 074

U.S. Nuclear Regulatory Commission
ATTN: Document Control Desk
Mail Station P1-137
Washington, D.C. 20555

SUBJECT: James A. FitzPatrick Nuclear Power Plant
Docket No. 50-333
10 CFR 50.9 Notification
Scram Air Header Design Deficiency

Dear Sir:

10 CFR 50.9(b) requires licensees to notify the NRC of information having a significant implication for public health and safety. The attachments to this letter describe a situation discovered at the Authority's FitzPatrick Nuclear Power Plant which may have generic implications for other boiling water reactors (BWR).

This situation, involving a design deficiency in the scram air header in the "backup scram" mode of operation, was determined to be insignificant for FitzPatrick. A plant specific evaluation prepared and approved by the Authority, determined that the identified deficiency is not a safety problem and is not reportable to the NRC under the requirements of 10 CFR Part 21. It is possible that other BWRs could have a similar configuration which for them could involve significant safety implications.

Should you or your staff have any questions regarding this matter, please contact Mr. J. A. Gray, Jr. of my staff.

Very truly yours,

for John C. Brons
Executive Vice President
Nuclear Generation

attachments: as stated

cc: see next page

A001
1/1

cc: Regional Administrator
U.S. Nuclear Regulatory Commission
475 Allendale Road
King of Prussia, PA 19406

Office of the Resident Inspector
U.S. Nuclear Regulatory Commission
P.O. Box 136
Lycoming, NY 13093

Mr. David E. LaBarge
Project Directorate I-1
Division of Reactor Projects - I/II
U.S. Nuclear Regulatory Commission
Mail Stop 14 B2
Washington, D.C. 20555

Mr. David Robare M/C 382
Manager - Plant Licensing Services
General Electric Co.
175 Curtner Ave.
San Jose, CA 95125

New York Power Authority
JAMES A. FITZPATRICK NUCLEAR POWER PLANT

ATTACHMENT I to JPN-89-074

SCRAM AIR HEADER DESIGN DEFICIENCY

Background

Boiling Water Reactors are designed with redundant, fail safe means to rapidly shut down, or scram, the reactor. Neutron absorbing control blades are inserted into the reactor core by hydraulically operated control rod drive mechanisms (CRDM). The hydraulic fluid (reactor coolant) discharged from the CRDMs is collected in two scram discharge volumes (SDV). During a scram, air operated SDV vent and drain valves close to contain the reactor coolant collected in the SDVs and to isolate the reactor coolant system which is now connected to the SDVs through the CRDMs. This is accomplished by repositioning the pair of solenoid operated SDV vent and drain pilot valves.

In the event that the pilot valves fail to reposition, backup scram valves provide an alternate means to depressurize the SDV vent and drain valve operators. In this mode of operation, air backflows from the SDV vent and drain valve operators, through the SDV vent and drain pilot valves (and test valve), and then out the backup scram valves.

Attachment II contains a schematic of the FitzPatrick scram air system showing all of the aforementioned valves.

Potential Design Deficiency

A potential safety hazard was thought to exist at FitzPatrick because backflow was not a stated design condition for the test valve (03SOV-29) and the SDV vent and drain pilot valves (03SOV-31A&B). A preliminary evaluation determined that these valves did not permit sufficient backflow which could prevent proper isolation of the reactor coolant system upon a scram should the SDV vent and drain pilot valves fail to reposition. The result would be a continuous discharge of reactor coolant into the secondary containment (reactor building). This constitutes a condition in which the plant would not perform as described in the General Electric Co. design documentation (GEK-784A, section 2-19), FitzPatrick FSAR (Section 7.2.3.5), or NRC Safety Evaluation Report (Section 7.2.4). Since this condition is due to a basic design deficiency (installed valves which are not designed to perform all of their intended functions), the provisions of 10 CFR 21 were applied and further evaluations were initiated.

FitzPatrick Implications

To determine whether a report to the NRC is required under Part 21, an additional evaluation was performed by the General Electric Co. In this report GE concluded that the "as-built" design of the FitzPatrick scram air system, and in particular, the backup scram valves do not constitute substantial safety hazard and is not reportable under 10 CFR 21. The following key points provide the basis for this conclusion:

- The current "as-built" system will isolate the SDV even if the automatic backup scram function is relied upon. Check valves, installed in 1983, parallel with the SDV vent and drain pilot valves and test valve, ensure that sufficient backflow exists to allow proper isolation of the SDV through the backup scram valves.

- Although discussed in the text of the FSAR, the backup scram function was not relied upon in the deterministic analytical safety analyses, and therefore, no credit is taken for their operation in the safety analysis report. All of the transient and accident analyses assume normal scram function. The backup scram valves were originally classified as non-safety related but were subsequently reclassified as safety related to meet the single active failure criteria contained in NRC Generic Letter 81-18.

- The SDV system was designed to allow corrective actions by the operator to terminate continuous discharge of reactor coolant into the secondary containment (reactor building) that could result from failed open SDV vent and drain valves. Operator actions include:

  1) Resetting the scram circuit and venting the SDV air header, either locally or from the control room via the test valve.

  2) Isolating the entire SDV from the reactor coolant system by closing the HCU scram isolation valves.

- The consequences of the reactor coolant leak into the secondary containment is less severe than other analyzed breaks, including a break of the SDV itself. The drains are piped to the reactor building equipment drain sump and the vents are piped into the RHR heat exchanger rooms. This provides a means of controlling the radiological impact of the leak. CRD seals and restrictive flow areas limit the magnitude of the leak as well. Operation of the Standby Gas Treatment system will filter airborne radionuclides and provide and elevated, monitored release point. The radiological release limits established in 10 CFR 100 will not be exceeded.

The Authority concludes, based upon the above factors, that the configuration of the FitzPatrick scram air system does not constitute a substantial safety hazard, and it does not require a notification to the NRC under the requirements of 10 CFR 21.

Modifications to the FitzPatrick Scram Air System

During the 1983 Reload 5/Cycle 6 refueling outage, check valves 03CRD-30 and 31 were installed around the SDV vent and drain pilot valves and test valve to allow the backup scram valves to depressurize the SDV air header without reliance on backflow through the SDV vent and drain pilot valves and test valve. This configuration assures that the current "as-built" configuration of the scram air system performs its backup scram function.

Generic Implications

The scram air system configuration at FitzPatrick is believed to be typical of all BWR-4s and is probably similar to all BWRs in general. It is possible that other BWRs may have installed valves in the scram air system which would not permit proper backflow for the "backup scram" mode of operation, or have modified their valves in such a manner as to affect the backflow characteristics. These solenoid operated valves are routinely

refurbished and their backleakage characteristics can change due to maintenance activities. Since the backflow characteristic is not discussed in the General Electric valve specifications, it is possible that the originally supplied valves could have been replaced with ones which permit no backleakage whatsoever. This is not meant to imply that the original or replacement valves are faulty; rather that the improper valves may have been selected for this particular application.

It should be noted that this design deficiency does not affect the safety design function of the scram system. The scram valve air operators will depressurize to cause the insertion of the control rods into the reactor core under both normal and "backup" scram demands. The "backup scram" mode of operation is relied upon only when there has been a failure to scram by normal means. Despite the design deficiency, it would have still resulted in the control rods inserting into the core and bringing the reactor subcritical. In addition, utilities are installing an alternate rod insertion (ARI) system which independently performs this backup scram function, including isolation of the SDV. The FitzPatrick ARI valves are also shown in Attachment II.

FitzPatrick Scram Air System

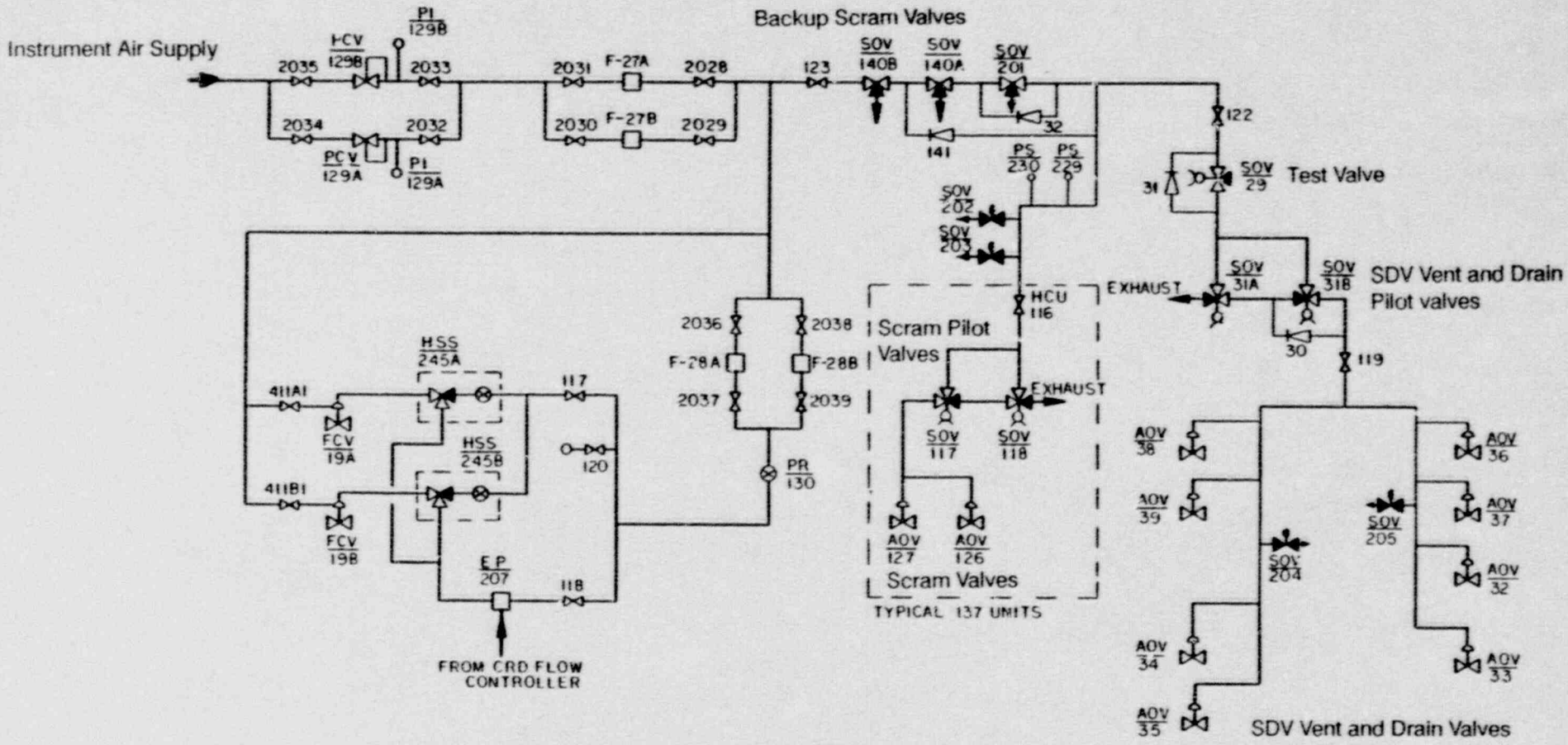

Note: Valves SOV201, 202, 203, 204, and 205 are part of the Alternate Rod Insertion (ARI) system.