U.S. NUCLEAR REGULATORY COMMISSION
REGION I

Report No. 50-336/89-13

Docket No. 50-336

License No. DPR-65

Licensee: Northeast Nuclear Energy Company
P. O. Box 270
Hartford, Connecticut 06141-0270

Facility Name: Millstone Unit No. 2

Inspection Conducted: July 10-21, 1989

Team Members: S. Barr, Reactor Engineer, RI
L. Cheung, Senior Reactor Engineer, RI
R. Loesch, Radiation Specialist, RI
R. Scholl, Safety Information Management System Coordinator, NRR
G. Vissing, Licensing Project Manager, NRR

Assistant Team Leader: Norman Blumberg, Chief, Operations Section — 9/12/89 date

Team Leader: Jacque P. Durr, Chief, Engineering Branch — 9/12/89 date

Inspection: A special, announced team inspection to deal with multiple allegations was conducted from July 10 through July 21, 1989.

Areas Inspected: See Executive Summary

Results: See Executive Summary

TABLE OF CONTENTS

PAGE NO.

EXECUTIVE SUMMARY

BACKGROUND

Region I has received a large number of allegations from three employees of the Millstone Unit 2 facility since the January - March, 1988, time frame. The volume of unresolved allegations increased to the point that the Region I allegation panel determined that an independent team should be formed to deal with the backlog of allegations received since the December, 1988, time frame. Allegations received before December, 1988, were addressed by the NRC resident inspectors. These allegations are related primarily to the instrumentation and controls and electrical equipment areas. However, some of the allegations deal with other technical and non-technical areas of the plant.

A seven-person-team consisting of technical specialists and a team leader was formed to address the allegations submitted since the December 1988 period. The team was composed of members from the Region I Division of Reactor Safety, Division of Reactor Projects, Division of Radiation Safety and Safeguards and headquarters elements from the Office of Nuclear Reactor Regulation (see enclosure 1). The team solicited interviews with the three employees to more clearly define the allegations and gather any specific supporting information. The interviews were held on June 13, 14, and 15, 1989, in a motel conference room located in East Lyme, Connecticut, near the plant.

Present at the interviews were the three individuals, three team members and an investigator from the Office of Investigations. Also present, at the request of the three primary allegers, was a fourth individual who had previously made allegations but was not directly employed by Northeast Utilities. The fourth individual made a statement on the record which did not contain any new allegations. Subsequent to the interviews, the entire team reviewed the results of the interviews and prepared for the onsite inspection which was subsequently performed during the period July 10 through 21, 1989.

The list of allegations consisted of 130 individual items, some of which are duplicates given by two different individuals dealing with the same subject or by the same individual on different dates in separate documents.

FINDINGS AND CONCLUSIONS

The allegations consisted of 130 separate issues of which 18 were beyond the scope of the inspection. Of the remaining 112 allegations, like issues were combined resulting in 77 discussions; of which the inspection determined that 34 were substantiated, 14 were unsubstantiated, 24 were partially substantiated, three were indeterminate and two were concluded to be statements of fact.

Five violations were identified as a result of the inspection which deal with 1) multiple examples of failure to follow procedures, 2) lack of seismic documentation for an electrical conduit run, 3) technicians using outdated drawings, 4) failure to functionally test a radiation monitor alarm, and 5)

improper control of overtime. None of the violations, either singularly or collectively, represent a major safety issue. However, the overall attitude of the maintenance and instrumentation and control departments regarding absolute procedural compliance warrants Millstone Unit 2 management attention.

Procedural noncompliance was manifested in situations where a technician used a procedure that had minor technical deficiencies in it, that by station procedures required correction before proceeding, but the technician completed the task without proper corrections and approvals. The technician may or may not have submitted the corrections to the procedure after the task was completed.

Another concern identified by the inspection team was the use by the technical staff of an informal reporting system to identify nonconforming conditions or other nuclear safety concerns to their supervisors. This practice subverts the formal corrective action programs established to comply with NRC regulations and failed to ensure, in some cases, that the technical staff received a response to the concerns identified.

The allegations provided to the team were not of the type that the NRC normally classifies as allegations. In contrast, the majority of allegations involved issues typically encountered during routine maintenance tasks that are normally reported and tracked in the licensee's maintenance or corrective actions program systems. There was no evidence that, once identified to Northeast Utilities, the licensee hesitated to correct safety significant issues.

The team concluded that future allegations of this nature should be referred to the licensee for disposition within their system. The NRC should periodically audit the licensee's programs to ensure they are adequately processing these matters in a timely manner. Further, the three employees should be encouraged to utilize the licensee's established programs to address their safety issues.

1.0 INTRODUCTION

1.1 BACKGROUND

During the January - March, 1988, period, the NRC began receiving allegations from three individuals employed at the Millstone Unit 2 nuclear generating station. Initially, the allegations were being addressed by the assigned resident inspectors and documented in their routine inspection reports. However, late in 1988 it became apparent that a continuing stream of allegations was being generated and that expanded efforts would be necessary by the agency to understand the root cause of the problem. A decision was made in the spring of 1989 to field a team of technical specialists to address the remaining allegations that had not been addressed by the resident inspectors. In addition, it was decided that the team would be composed mainly of inspectors from elements within the agency that were generally independent of any previous association with the utility or the three individuals for a completely independent review.

All relevant documents dealing with allegations provided since the December 1988 time frame by the employees, including records of telephone conversations with the resident inspectors, were examined for specific allegations. Each allegation was assigned a unique number for control and tracking purposes. A set of questions was developed for each allegation that would enable the team to focus on the central issue and provide a basis for an interview.

Contact with the three employees was established and transcribed interviews were scheduled for June 13, 14, and 15, 1989, at a local motel conference room near the Millstone facility. The individuals requested to be interviewed together rather than separately. This request was honored with the condition that they would be questioned such that individual records for each of them would be created.

1.2 INSPECTION SCOPE AND REPORT ORGANIZATION

Subsequent to the interviews, the team was assembled and inspection plans for each technical allegation were developed. Issues such as harassment and intimidation were forwarded to the NRC Region I's allegation panel and subsequently directed to the appropriate office. The licensee was notified that a team inspection was planned for the weeks of July 10 through 21, 1989, and that they should have appropriate technical personnel and logistic support available. Further, technical documents were requested to enable the team to begin certain aspects of the inspection in the office.

The scope of the inspection includes all the technical allegations received from the three employees during the period from December 1988 through July 1989. The team was chartered to examine all technical issues dealing with matters under the purview of the NRC.

Each allegation was assigned a unique number for control and tracking purposes to assure resolution. Breaks in the numerical sequencing will occur within the report because some issues are beyond the charter of this team or they were determined not to warrant inspection because they do not deal with nuclear safety. Those issues beyond the scope of this inspection that contain material under the jurisdiction of the NRC have been referred to the appropriate organizations. Several allegations did not appear to contain issues which the NRC normally considers nuclear safety related and, therefore, does not inspect. However, because of the number of concerns expressed by the allegers and their intimate knowledege of the plant, some of these issues were examined for the sake of thoroughness to assure no safety issues were eliminated.

Several allegations were duplicates of each other, either two from the same individual in two separate documents or from two different individuals dealing with the same subject. Where duplicate allegations were identified, cross references are listed.

The numbering system was developed accordingly:

- An allegation number such as X.6.12 represents an allegation from employee X, extracted from document number 6, item number 12. If multiple issues were generated from the base issue, the numbering was extended to X.6.12.1. This was likely to have occurred from discussions during the transcribed interviews.

The statement "an allegation was substantiated" means that the statement made by the three employees was found to be accurate as stated. It does not necessarily imply that there was anything found to be improper in any required activity, only that the facts as stated were accurate. Unsubstantiated means that no evidence was found by the inspection team to support the allegation or that evidence contrary to the allegation was established. Some allegations remain indeterminate in that there is no way to confirm or deny the statement because circumstances do not permit verification.

Attendees at the exit interview are listed in Appendix A.

1.3 CONCLUSIONS

The team noted that the "allegations" do not fit the classical form for allegations that the NRC normally inspects. The issues raised by the three employees are items that they encountered in their daily activities working in the maintenance and instrumentation and control departments. These are equipment and procedural deficiencies that warrant some form of corrective actions by the licensee and would normally be recorded and tracked to resolution in the licensee's corrective maintenance program or processed in the corrective actions programs such as the nonconformance reporting system. Most allegations processed by the NRC imply some impropriety on the part of a license holder that warrants enforcement to correct. There was no evidence to indicate that Northeast Utilities is unwilling to resolve safety issues that are valid, once brought to their attention.

The inspection revealed that the three employees bear a deep seated distrust for the utility management and have not availed themselves of the licensee's allegation processing program. It appears that the distrust stems from the management/employee relationship. In bringing these issues to the NRC, the employees believe they have suffered harassment and intimidation from Northeast Utilities management. The harassment and intimidation aspects of the allegations were beyond the charter for this team and are being pursued separately within the agency's procedures.

The inspection team examined the licensee's allegation handling program and found it was organized to process the allegations such as those discussed in this report. However, it was noted that only four allegations had been processed since it was established and none of these were from the subject employees. From this fact and interviews with the employees, it is concluded that the three employees have not utilized the program and, therefore, appear not to have a basis to judge the responsiveness of the program. It is also concluded that the licensee has not been aggressive in pursuing allegations that are not directly delivered to the system. The three employees have made numerous allegations to the news media, none of which were provided to the utility's allegation program.

The allegation that there is a general laxity within the Unit 2 maintenance and instrumentation and control departments regarding adherence to procedures appears to be substantiated. Although no acutely safety significant violations were identified, enough examples were found to indicate that management action is warranted to correct the current attitudes regarding procedural compliance in general.

Several allegations were made regarding a lack of responsiveness to concerns raised by the employees. Part of the problem lies within the informal process used to report deficiencies. The Millstone Unit 2 employees used a general form called a "three part memo (memorandum)" to document all deficiencies, questions or concerns to their supervision. This subverts the established corrective action systems such as the nonconformance reporting program, drawing change controls or other systems designed to capture significant deficiencies and ensure proper tracking and resolution. Compounding this problem is the fact that the licensee encourages the use of this informal system, preferring the technicians use the three part memo and depending on the supervisors, engineers and PMMS planners to translate the memoranda into the appropriate control system documents. The three employees were not following established procedures in recording deficiencies outside of the established corrective action systems. The employees would have been assured of receiving responses to their safety significant concerns if they had used the formal systems as specified in station procedures.

The team identified five violations dealing with adherence to procedures, a lack of seismic documentation for an electrical conduit run, technicians using outdated drawings, failure to functionally test a radiation monitor alarm, and improper control of overtime. Also, six unresolved items were recorded which included the use of the three part memorandum for initially recording deficient conditions, reactor coolant pump instrumentation wire that may be installed such that it exceeds the minimum bending radius tolerance, a procedure was identified that is exceptionally difficult to use, a tagging program that permits two sets of tags on a single system simultaneously, a procedure that does not properly recognize the tolerance band while checking pressure gauge hysteresis, and test equipment practices that do not account for fluid contamination. None of the findings, singularly or collectively, represent a major nuclear safety concern.

The team recommends that a concerted effort on the part of both parties be put forth to resolve their differences because of the adverse climate which has been created that is not conducive to good plant operations. Use of the licensee's formal corrective action systems or allegation handling program should be encouraged. This system can be monitored by the NRC to ensure responsive resolution of nuclear safety concerns.

2.0 REPORT DETAILS

2.1 NORTHEAST UTILITIES ALLEGATION PROCESSING

Northeast Utilities management developed a corporate utility and Millstone station policy regarding allegations and their processing in early 1985 during the final construction days of Millstone Unit No.3. This policy was formalized in the Nuclear Engineering and Operations Policy Statement, Employee Protection (10 CFR 50.7), Policy No. 22. This initial program was essentially in response to the allegations received during the latter stages of construction at Unit No. 3.

Subsequent to the construction activities at Unit No.3, the licensee developed a more detailed procedure, Nuclear Engineering and Operations Procedure (NEO) 2.15, Nuclear Concerns. This corporate level procedure was implemented at the station level by the Administrative Control Procedure (ACP) 1.14 A and was first issued on October 15, 1987.

The current revision of ACP 1.14, describes a system for employees to present concerns to their immediate supervisors or any of three other groups which include the NRC, the Nuclear Concerns Manager or the Nuclear Review Team. The Nuclear Concerns Manager is an onsite representative who can be accessed via a 1-800 telephone number or in writing. Concerns provided to the Nuclear Concerns Manager are treated confidentially.

The Nuclear Review Team is an independent contractor that can be contacted by calling collect or by writing. The Nuclear Review Team advises Northeast Utilities executive management on matters of nuclear safety and makes recommendations regarding corrective actions. The review team also provides confidentiality to the alleger. Lastly, the person is encouraged to contact the NRC.

The licensee has periodically provided guidance to the employees on the existence of the allegation handling programs and encourages them to bring their concerns to the Northeast Utilities management. This was accomplished by memoranda and bulletin board postings. The awareness of the NU employees of the allegation handling process was verified by the resident inspectors through a formal survey of the licensee's staff. This was documented in NRC Inspection Report No. 50-336/88-21. This awareness was further confirmed by the NRC allegation inspection team through informal interviews of NU Unit No. 2 employees conducted during the current inspection.

A review of the licensee's current allegation handling system disclosed that only four allegations had been received and processed. None of the allegations presently under review by the NRC had been provided by the three employees to the formal allegation handling systems other than by the NRC.

Conclusion

Several conclusions were drawn from the foregoing lack of allegations in these systems. First, the three employees have not availed themselves of the formal allegation handling programs instituted by the licensee, and thus, in all fairness, have not determined the efficacy of these programs to resolve their concerns.

Second, the licensee's allegation handling programs are not aggressive in pursuing allegations other than those provided directly to it. The three employees have made several indirect allegations to the local news media which have not been actively pursued by Northeast Utilities within the established programs.

Third, the employees generally use a form called a three part memorandum to communicate to their first line supervisors. This form contains information which may be the genesis of an employee concern or allegation that is processed in an informal system. This informal system does not assure feedback to the employee nor is it tracked to assure completion.

2.2 Allegations

A.6.1 Radiation Monitoring Setpoint

Allegation

"We do a monthly functional calibration check on all of our radiation monitoring equipment and a number of them have alarm set points which we are able to change. One of the problems that I have had is that we have to deal with a set point which the Operations Department derives without providing us with a tolerance. They have a procedure whereby they change the set point. Their procedure does not address a tolerance to that radiation monitor. They make out a sheet that says the set point used to be this and now the set point is this. But no tolerance is provided for us. Consequently, I come up and do a monthly functional where I am required to check that set point."

Discussion

Plant radiation monitors have both upper (high) and low (fail) setpoints which provide an alarm to notify personnel of changing or abnormal radiation levels. In addition, failure of a radiation detector, which typically would result in a zero reading, is also detected by the fail setpoint.

Process radiation monitors that are used to control the batch release of liquid and gaseous effluents have high setpoints that are calculated for each specific release. Fail setpoints are typically set to some value less than background and are not routinely changed. For those process radiation monitors that contain local computerized electronics (PIOPs), the readouts and setpoints are digitally displayed. For digital units, no setpoint tolerances are necessary since once a value is set, it is exact unless changed. However, the inspector noted that upon loss of power, the PIOPs units must be reprogrammed with the appropriate low (fail) setpoint. A review of the appropriate calibration and functional check procedures indicated no guidance to the technicians for setting of the low setpoint. In addition, a review of the various loop folders, folders maintained in the I&C laboratory which contain detailed technical information specific to each monitor, included a memorandum, dated April 12, 1989, from Electrical Engineering which specified a low (fail) alarm setpoint for the two PIOPs units. The memorandum went on to state that setpoint tolerances were "+/- 10% of the high end of the decade, unless the setpoint is at the lowest endpoint, then the minus tolerance is 10% of the previous decade." In discussions with I&C personnel and Electrical Engineering, no formal guidance had existed prior to issuance of the inter-office memorandum, and not all technicians interviewed by the inspectors were aware of the same guidance on setting of tolerances.

Local area radiation monitors typically have ranges from 0.1 mR/hr to 10,000 mR/hr (5 decades), and their corresponding meter and recorder outputs are logarithmic scales. As the local radiation conditions change, operations personnel may change the setpoints in accordance with Operations Procedure OP2383C, "Radiation Monitor Alarm Setpoint Control", Rev. 1. Figure 8.2 of procedure OP2383C identifies the applicable radiation monitors. The procedure provides a Note in Section 5 that defines how to calculate the tolerances for a particular

setpoint. In addition, it directs the operators to update the setpoint stickers located on each detector readout module to reflect the current setpoints. The inspector reviewed I&C procedure IC2422G, "Local Area Radiation Monitors Calibration, Model GA2TMO", Rev. 2, dated July 25, 1985, for guidance on setpoint tolerances. The procedure did not specify tolerances for monitor setpoints, however, the corresponding data sheets, I&C Form 2422G-1, dated May 6, 1985, in step 5.2.3, gave a tolerance of +/- 10% of a decade for the high alarm setpoint, referring the technician to the setpoint sticker (located on the electronics module in the control room) for the actual setpoint value and also specifies a tolerance of +0.1 and -0.01 for the fail alarm. The inspector noted after a review of the setpoint stickers, all but one monitor had setpoint stickers and that most also specified tolerances, although not necessarily in accordance with the Note in Section 5 of the procedure.

Conclusion

This allegation was substantiated. Guidance for setpoints currently does exist although it is not always consistent, leading to confusion as to what setpoint tolerances apply for a particular monitor. Although the operations staff occasionally revised monitor setpoints and updated the setpoint stickers, they were not required by procedure to provide setpoint tolerances. The use of logarithmic output devices contributed to the confusion on tolerances. The licensee is currently evaluating an alternative "linear equivalent" method used in the nuclear industry for log meters to standardize how tolerances for various setpoints are derived.

A.6.2 and A.8.2 Radiation Monitor Geometry/Spent Fuel Pool

Allegation

"If you go back into '87 and '88, you are going to find that I made a complaint about a control room radiation monitor. We are not using sources exposed to a monitor in the same geometric fashion each time we do the calibration check. The same situation exists with procedure SP2404AO. It happens to be an area monitor which is around the spent fuel pool. The procedure has never designated how that detector should lay in that calibrator. The procedure has now been changed. It was a layman's type or a technician's type evaluation. I would think that we would have some group, radiation assessment, or some engineering type health physics person evaluate how that is to be put in there. Technically, I don't know if I am correct in assuming that the geometry in that procedure is adequate to properly calibrate that Rad monitor."

Discussion

Four radiation monitors are located on the walls around the spent fuel pool. Calibration of the units includes exposing them to a portable source to determine if any significant changes have occurred since the last calibration. This is followed by removing the detector from it's mount and it's corresponding electronics module from the control room. The equipment is then reassembled in the Health Physics Calibration Lab and calibrated against a source traceable to the National Institute of Standards and Technology (formerly the National Bureau of Standards).

The calibration procedure, SP2404AO, "Spent Fuel Pool Area Radiation Monitors, RM8139, 8142, 8156 and 8157 Calibration", Rev. 3, currently contains guidance, in Figure 9.5, on how to place the detector in the calibrator. During discussions with I&C, Electrical Engineering, and Corporate Radiological Assessment personnel, the inspector noted that when the diagram was added to the procedure, it was initiated and reviewed entirely within the I&C Department - the procedure received no outside technical review. The inspector also noted that the diagram was technically incorrect. The dose rates provided by the calibrator are accurately determined at a preselected zero reference line. Dose rates in front of or behind this reference line are either higher or lower than the values listed on the calibration chart. When the detector is place into the calibrator, the proper placement is to place the center of the detector's active volume over this zero reference line. In this fashion, the one half of the detector that receives a higher dose rate is compensated by the half receiving a lower dose rate. The diagram that was placed into surveillance procedure SP 2404AO as Figure 9.5, shows the front of the detector at the reference line, rather than centered on it.

Conclusion

The allegation of lack of adequate technical review of the procedural change is substantiated. However, since each detector was actually in a lower average radiation field than expected, the system, as calibrated, would indicate a value higher than what it was actually sensing. Therefore, although technically incorrect, this misplacement resulted in an error in the conservative direction and did not affect the safety aspects of its designed function.

A.6.3, A.7.1 Radiation Monitor Control Room Vent

Allegation

"In the outage of late '86, a gentleman in my department had made a complaint that the calibration of the control room radiation monitors was hokey and that nothing was in any kind of reproducible geometry and we were not using the recommended source that was recommended by General Atomic who was the manufacturer of that radiation monitor. Well, my concern with SP2404BA is in order to accomplish the calibration even after we got the source, it took the guy like two weeks to perform the calibration on that module. And he did a number of changes. And I believe in one instance, we actually changed the value of tolerance to a higher percentage in order to pass the calibration."

Discussion

Two radiation monitors (RM-9799A and RM-9799B) are installed on the control room's intake ventilation duct. Their purpose is to isolate the control room from the outside environment when the air source becomes radiologically contaminated due to an incident at any one of the three Millstone units. The Technical Specifications set the point of control room isolation at 2 mR/hr. A problem was previously brought to the attention of the NRC regarding the method of calibrating the two monitors - specifically, whether the geometry under which

it was being calibrated was reproducible and accurate. The allegation in this area was investigated and documented in Regional Inspection Report 50-336/88-07 and resulted in a violation of plant Technical Specifications (TS) and a deviation against the facility Final Safety Analysis Report.

The licensee is currently using a source purchased from Sorrento (formerly General Atomic), model RT-10, for calibration of the detectors. The controlling procedure is SP2404BA, "Control Room Ventilation Radiation Monitor Calibration", Rev. 3, dated October 6, 1988. The calibration source provides two data points, 39 mR/hr and 3400 mR/hr, and is supplemented with an electronic calibration which includes verifying the 1 mR/hr setpoint currently being used. This was deemed acceptable by Corporate Radiological Assessment in letter NE-88-RA-597, dated September 8, 1988.

The original calibration data sheets (Form 2404BA-1) specified a tolerance of +/- 10% of the source value. Some difficulty was experienced due to slight fluctuations in the indicated log reading at the low source value of 39 mR/hr. In conversations with I&C, Radiological Assessment agreed to a new tolerance of -10% and +20% in October, 1988, and resulted in Change 1 to Form 2404BA-1. This increased upper end tolerance would allow for a less difficult calibration and is within the +/- 20% guidelines of ANSI Standard ANSI/ANS-HPSSC-6.8.1-1981.

Conclusion

This allegation is substantiated but without any safety significance. The current method of calibration uses a reproducible geometry. Although lacking a source calibration point below the setpoint value is not an ideal situation (nor is it difficult to achieve), inspector review of the Corporate analysis indicates that the safety function (control room isolation) has not been compromised. The increased upper tolerance of +20% allows for the acceptance of a detector reading higher than normal and would result in isolating the control room sooner than would be expected. The TS requires that by the time the dose rate exceeds 2 mR/hr, the control room ventilation system must be in recirculation mode. With a conservative administrative setpoint of 1 mR/hr and an upper tolerance of 20%, this condition is satisfied.

A.6.4, A.11.3 Procedural Adherence and Inadequacies

Allegation

There are general inadequacies in Unit 2 procedures, particularly I&C procedures. Procedures cannot be worked as written. I&C personnel are not always getting procedure changes. The procedure improvement program does not appear to be effectively implemented.

There is a general atmosphere of procedure non-compliance. There are continuing violations of general training and the company handbook which require complete procedure compliance.

Note: The allegation of procedure noncompliance also addresses noncompliance with procedure ACP 1.14 concerning grievances. This is considered a labor relations issue rather than a technical issue and is not addressed in this report.

Changes were made to calibration procedures after the fact rather than during performance of the procedure.

- Discussion

During this inspection, the inspectors witnessed the performance of several I&C procedures. The allegers also presented to the inspectors several procedures which they believed to be sufficiently deficient that they could not be performed as written. They noted that these procedures had been performed on several different occasions by other technicians prior to the allegers doing them and that they were performed with no changes being made.

Discussions were held with technicians and other personnel concerning procedure usage and compliance. The procedure change process was reviewed to determine its adequacy. Working copies of procedures maintained in the I&C shop files were reviewed to determine if procedures were up to date. The status of the Procedure Improvement Program was reviewed for the Unit 2 I&C Department, Maintenance Department and the Operations Department.

The following procedures identified by the allegers appear to have inadequate procedural steps or cannot be performed as written. Items presented here are examples and do not necessarily reflect all deficiencies in the procedure.

(1) IC 2422G, Local Area Radiation Monitors Calibration, Model GA 2TMO Revision 2, 7/25/85

- Step 5.2.3 which functionally checks local alarms, fails to check the general control room alarm on console CO 6/7.

- Paragraph 5.2.3.1, which appears to define the source field is confusing where it's placed and appears to apply to paragraph 5.2.4. rather than 5.2.3.

- Paragraph 5.2.4, which checks detectors does not clearly state what the actual source fields are.

- Paragraph 5.4, which does the isotopic calibration does not specify the geometry for the calibration source.

- Paragraph 5.4.7.1, which is a contingency step if the calibration performed in 5.4.7 cannot be done, requires a test using the remote meter. However, the remote meter, by procedure, has not been removed from the panel and is not installed in the test circuit.

- Paragraph 5.4.14 removes the detector probe and CRM module from the test box and reinstalls the CRM module into the system. The step fails to specify reinstalling the detector.

(2) SP 2401J, Thermal Margin/Low Pressure Calibration Test, Revision 9, steps 7.2.4 and 7.2.5 require obtaining the latest revision of SP 2401J and associated data sheets from a computer data diskette and entering it on to data sheet 2401J-2. However, until change 1 was written in December 1988, there was no place on the data sheet to make this entry. This procedure was performed at least three times with no change to the procedure being obtained. The inspector did review data sheets for September, October and November 1988 test performance which indicated the diskette was used and the printout attached. (Reference A.6.18.2)

(3) SP 2403A, E.S.A.S. Bistable Trip and Automatic Inserter Test, Revision 8. In five places in this procedure, steps are reversed in that the first step calls for releasing the applicable test switch and the next step requires recording the data. In actuality, the data must be recorded before the test switch is released. This procedure was performed five times before a procedure change was issued to correct the error.

The above are examples of procedures which could not be performed as written. They do not necessarily include all things that may require correcting in those procedures. As discussed later in this report, the inspector confirmed the operability of equipment potentially effected by some of these deficient procedures. It appears that despite the problems with the procedures, knowledgeable technicians did the work correctly but did not bother to get the procedures changed. Although the licensee presented evidence and the inspector verified that numerous procedure changes had been approved in the last two years, there appeared to be ample evidence that at least some procedure were inadequately written and that some technicians were not making the needed changes.

There is a Procedure Improvement Program in effect at Millstone Station. Each Unit 2 department has been upgrading it's procedures. This program appears to be progressing very slowly in the I&C, Maintenance and Operations Departments; however, each manager stated that they will meet the station imposed deadlines. The inspector observed that one of the deficient procedures described above, 2403A, had been through the procedure improvement review and the errors were not caught. It appears that these reviews have been more oriented to human factors and format issues than to workability. Discussions with the I&C PMMS planner who is in charge of the program stated that this problem had been recently recognized. A recent revision to the I&C procedure improvement routing sheet now requires a walk through or "first performance" validation prior to completion of the procedure improvement process. Technical adequacy and workability can only be obtained by technicians submitting changes as errors are found, and by revisions made during the procedure improvement process. Both of these processes appear to be working better now than in the past.

Discussions with the three employees indicated that procedures in use may not be up to date and the latest changes were not available to technicians. The inspectors performed an extensive review of procedures in the I&C shop. Unlike the out of date drawings identified during review of another allegation (A.6.12), in no case was an out of date procedure found. All procedure performances witnessed by the inspectors contained the latest changes. The current system for updating procedure folders, although informal, seems to provide reasonable

assurance that the latest revision or change to a procedure will be available to technicians. There apparently have been isolated instances where changes on the change sheet were not properly entered into the body of the procedure. One instance was identified during this inspection. See allegation A.11.1 for a further discussion on posting of procedural changes.

The inspectors reviewed the allegation that changes to procedures were being made after the fact. Discussions with technicians indicated this may have been done in a few instances in the past. The inspectors could find no evidence of this during the inspection. Review of the records for two recent procedure performances specifically identified as having been changed after the fact were found to have been changed during the performance of the procedure as required (See allegation A.11.4).

In one instance, the employee stated that SP 2403A should also test the containment high pressure setpoint. Since this was a potential technical specification violation, this item was turned over to the Unit 2 resident inspector and will be addressed in his report.

Conclusion

The allegation concerning general inadequacies in Unit 2 I&C procedures was substantiated. Several procedures that could not work as written were identified to validate this observation. The failure to properly establish, implement and maintain procedures is a violation of Technical Specification 6.8.1. (50-336/89-13-01).

I&C personnel not getting procedure changes was not substantiated although there may have been isolated cases of changes improperly posted. The ineffective implementation of the procedure improvement program appears to be at least partially substantiated. Some procedures went through the procedure improvement process and were still partially unworkable. This process is also too slow to depend on expeditious correction of procedures. Of approximately 270 procedures requiring review in the I&C Department, to date, only 23 have been completed and most of those did not have a walk through validation.

The allegation stating that there was a general atmosphere of procedure non-compliance is partially substantiated for the I&C Department. There appears to be sufficient documentation, that while knowledgeable technicians may have done the correct things, there were many instances where inaccurate or incomplete procedural steps had to be ignored without attempts to get a procedure change.

The allegation that procedure changes were being made after the fact could not be substantiated.

It should be noted that although some of the allegations were substantiated, none appeared to have caused a safety significant problem. However, failure to take corrective action could lead to more serious problems in the future.

A.6.5.1 General Non-use Of Nonconformance Reports. Improper Work Done On Printed Circuit Boards

Allegations

This allegation appears to have stemmed from at least three instances where, in the opinion of the alleger, nonconformance reports (NCR) were not prepared or that the nonconformance reports were not timely. The allegation thus resulted in a general allegation that Nonconformance Reports at Millstone 2 were not prepared. The three instances are:

1. Pressure signal limiter printed circuit boards (PCB) supplied by The Foxboro Company would not slide into their frames. The alleger believed that a NCR should have been written.

2. The wide range Radiation Monitor 8262A, particulate filter assembly was missing the metal screen that supports the filter paper. A hand frisker screen was modified for assembly on the radiation monitor. The alleger believed that a NCR should have been written.

3. High voltage connectors for RPS wide range channels A and D were not compatable with equipment and resulted in improper installation. A NCR was prepared but was not timely.

Discussion

Control of nonconformances are provided by three procedures as follows:

ACP-QA-5.01, NONCONFORMING MATERIALS AND PARTS; NEO-3.05, NONCONFORMANCE REPORTS; and QSD-1.05, CONTROL OF NONCONFORMANCES.

The foregoing procedures define a nonconformance as:

A deficiency in characteristics, documentation, or procedure which renders the quality of an item unacceptable or indeterminate where the deficiency cannot be corrected within the scope of the requirements of drawings, procedures, specifications, or other engineering requirements, therefore requires an engineering evaluation.

QSD-1.05 indicates examples of nonconformances which include: physical defects, test failures, incorrect or inadequate documentation, or deviation from prescribed processing, inspection or test procedures. Examples are not provided by the other two procedures. However, by practice the Maintenance Department and the Instrumentation and Control Department identify nonconformances as deficiencies remaining in systems, structures and components after rework. The nonconformance reporting (NCR) program is a controlled program for identifying, documenting, dispositioning, and approving their disposition for quality nonconforming materials, parts, components and on occasion services. The licensee has several other methods of reporting and handling deficiencies including Plant Incident Reports (PIR), procedure ACP-QA-10.01; Trouble Reports (TR), Work Orders (WO), procedure ACP-QA-2.02C; and for the I&C department only the Instrumentation Calibration Review (ICR) program. Each of these systems has their own reporting forms.

Personnel working at Millstone 2 are trained in the initial General Employee Training to be responsible to inform management of discrepancies and nonconformances affecting quality and safety. The personnel are also trained in the use of procedures. Neither the I&C or the Maintenance Department provide training on specific procedures. Each of the above methods of reporting deficiencies has procedures. The NCR system does not identify a specific individual that is responsible for reporting but the Training Department indicates that all personnel are responsible for reporting NCRs. The PIR program also identifies all plant personnel as responsible; the WO system identifies the originator as the designated individual within the department; and the TR system does not identify a particular individual.

At Millstone 2, the PIR program deals mainly with determining operability and reporting requirements. Deficiencies identified by the PIR program that may require NCR reporting will not necessarily be reported by the NCR process. In practice, only operations personnel use this system.

The TR process is a computerized process. It is a method of reporting problems that are turned into automatic work orders (AWO) through direct access to the Product Maintenance Management System (PMMS) computer terminal. In practice, within the Maintenance and I&C Departments, the PMMS planner usually prepares the report. Access to the computer and the PMMS system is necessary for this purpose In the I&C Department only the PMMS planner, supervisors and engineers have access to the computer. In the Maintenance Department, most have access to the computer but for all practical purposes the PMMS planner is the person that prepares trouble reports.

Although all personnel are responsible for reporting nonconformances, only the supervisors, the department PMMS planner and the engineers routinely prepare NCRs. A survey of technicians in the I&C and Maintenance Departments found that only a few knew of the NCR process and had ever used it. In the I&C and Maintenance Departments, NCRs are usually identified as discrepancies after rework. Since technicians are not accustomed to preparing NCRs, nonconformances may go unreported. However, it has been a practice within the I&C and the Maintenance Departments for the PMMS planner and the engineers in addition to the supervisors to be contacts for the technicians to report problems relating to work. Nonconformances may go unreported through the work order process because of the orientation of the technicians. A work order is usually to correct a problem. The problem may not immediately be corrected and thus a nonconformance would not be reported through the NCR process.

The licensee has established the use of a three part memorandum system for informal reporting of problems. This system has no formal status through procedures or policy statements. It is a system of providing a message to anyone on the top half of the form with the bottom half of the form used for the reply. There are three copies, the originator keeps an initial copy, the receiver completes the bottom half, keeps a copy and sends the original back to the originator. The system is not controlled, and memoranda often are discarded or mislaid. Also the originator often is not provided a reply. The licensee's personnel use this system to report problems to their supervisors and other people within the organization.

The I&C Department, Maintenance Department and the Quality Services Department provide for the most NCRs. Between January and June 1989 there have been more than 150 NCRs by plant personnel. Quality Services have more than 180 NCRs. Thus, the general allegation that NCRs are not reported is not substantiated.

The Quality Services Department performed an audit of approximately 350 NCRs for the period of January 1 to December 15, 1988 to determine if the nonconformance program meets the licensee's quality commitments. The audit indicates that many conflicts have existed as to the appropriateness of either an NCR or a PIR. Nothing is documented other than an AWO to affect a fix in many cases. This is not adequate in that an AWO is a work document, not an evaluation document. Many other nonconforming conditions are simply identified on a trouble report which is turned into a AWO. The Quality Services Department still consider these issues and other issues as open audit findings.

With regard to the specific examples that the alleger identifies, these are discussed as follows:

1. Concerning a NCR for defective signal limiter printed circuit boards by The Foxboro Company, NCR 288-575 was generated for this deficiency on September 29, 1988. The defective components were returned to The Foxboro Company on September 9, 1988. This was the subject of an allegation by the alleger to the NRC resident inspector on October 5, 1988 (see Inspection Report 50-366/88-28 dated February 13, 1989.) The inspection found no safety significance because there was no danger of use of faulty components. The components were found defective, returned to The Foxboro Company for failure analysis and repair and an NCR was made. The alleger's concern was that the NCR was not timely. The inspection report found that because equipment control was appropriate, the NCR timeliness was evaluated as sufficient for the need. However, since the NCR process does not address timeliness, this issue is open pending further assessment. An NRC inspection of The Foxboro Company was performed during February 1989. The inspection determined that PCBs supplied to the licensee were final tested by a temporary trainee and that instructions to assemble the signal limiter PCBs have been subsequently revised to correct the problem. However, a nonconformance was identified by the NRC inspection - Contrary to Foxboro procedures, the Nuclear Safety Subcommittee was not convened to evaluate problems identified in the PCBs repair order. The alleger stated that not until he showed an extreme interest in the faulty PCBs did anyone initiate a NCR.

2. Concerning the missing filter assembly on the Radiation Monitor 8262A, NCR 289-010 was written to address the problem on February 13. 1989. The deficiency was reported by the alleger to his supervisor via a three part memorandum on January 17, 1989. The I&C Department engineer responded via the bottom part of the three part memorandum on May 11, 1989. The alleger stated that the NCR should have been made as soon as the deficiency was identified. The issue was not safety significant.

3. Concerning high voltage connectors for the RPS wide range channels A and D, NCR 289-105 was written by the I&C engineer on March 21, 1989. The problem was identified by the alleger in a three part memorandum to his supervisor on March 15, 1989. No record could be found to show that there was a reply.

The alleger appears to have depended upon three part memoranda to only his supervisor to report problems. It has been the practice in the alleger's department for the technicians to report problems and deficiencies to their supervisors, the engineer or the PMMS planner. Also the alleger is able to prepare NCRs as is demonstrated by an NCR 289-110 which was prepared by him on March 10, 1989. It would appear that the alleger has the resources available to, on his own, to report problems and deficiencies.

Conclusion

The general allegation that NCRs are not used is unsubstantiated. On two specific examples, the NCRs may have been untimely but they were not safety significant. Because of the various methods of reporting deficiencies and the lack of knowledge of the technicians of the methods, some nonconformances are not reported as NCRs. The general training indicates that deficiencies should be reported to management but training does not necessarily state how this should be done. Training assumes that since there are procedures for reporting deficiencies and the personnel are trained in the use of procedures, then deficiencies will be reported via established procedures.

The three part memorandum is used by the technicians to document a variety of concerns that range from nonconforming conditions to, what could be construed to be, allegations. The use of the three part memorandum for input to the nonconformance reporting system or any other formal control system is not acceptable in that it is not formalized and, therefore, does not provide the necessary control to ensure evaluation and corrective action. The licensee should examine the use of the three part memorandum and assess the need for formalization of the process or implement existing procedures for input into formal control systems. This item is unresolved pending the licensee's resolution of the internal nonconformance reporting audit findings and the control of inputs to formal reporting systems (336/89-13-02).

A.6.5.2, A.14.2 & A.16.1 Wide Range Nuclear Instrumentation

Allegation

The Wide Range Nuclear Instrumentation (WRNI) vendor recommended new discriminator threshold voltage settings for the three instrumentation channels in September 1988, but as of June 1989, the licensee had not implementd the change.

The alleger also stated that the general bias (gain) adjustment to the WRNI had not been made and that, while Unit 2 was operating at 100% power, the WRNI was indicating only about 70% power.

Discussion

The WRNI performs the following functions at Millstone Unit 2:

1) Provide continuous count rate indication during fuel movement.
2) Provide start-up count rate and percent power indication between 10E-8% and 100% power.
3) Generate Zero Power Mode Trip automatic bypass removal at 10E-4% power.
4) Provide indication of reactor power for protection against a boron dilution event.
5) Provide indication at the Remote Shutdown panel for shutdown capability outside the control room.
6) Satisfy the requirements of REG GUIDE 1.97 for a type B, category 1, wide range (10E-6 to 100% power) neutron flux monitoring system.

In an August 1988 letter, the licensee requested from the WRNI supplier, Gamma-Metrics, a discriminator voltage setting that would better line up the counts per second curve and the percent power curve so there isn't a jump when the WRNI switches between curves. The licensee supplied the necessary plant trip and start up data, and Gamma-Metrics supplied the new discriminator voltage setting in a September 1988 response. The licensee implemented the new setting value with change 3 to Revision 6 of licensee procedure IC2417I-1,"Wide Range Channel Drawer Calibration Data Sheet," dated July 5,1989.

The general bias adjustment is an adjustment to calibrate the high end limit of the WRNI indicating range. The new core, loaded during the last outage at Unit 2 (February-March 1989), is a low-leakage core, and the WRNI is therefore exposed to a lower neutron flux. The WRNI had not been calibrated for the new flux, and the WRNI was indicating around 70% power when the plant was actually at 100% power. The WRNI was subsequently calibrated, and the new general bias setpoints were also implemented with Change 3 to Revision 6 of proredure IC2417I-1 on July 5, 1989. By the time the NRC inspection team arrived on site, the licensee had corrected the deficiencies.

From a safety standpoint, the delay in adjusting the discriminator voltage and the general bias was not significant. The new discriminator voltage value smoothed the response of the WRNI, but the jump between the pulse count curve and the percent power curve did not prevent the WRNI from performing any of the functions listed above. The delay in adjusting the general bias prevented the WRNI from reading more than 70% in the highest decade scale on the instrument. The WRNI provides indication over 9 decades of power, and with a 30% deficiency in the highest decade, the WRNI still provided coverage over 96.7% of its indicating range. The WRNI is used primarily to provide real time neutron flux information to the operator to confirm plant shutdown in the immediate period following a reactor trip. The important parameter is the fact that the reactor neutron flux is decaying rather than the absolute value. An innaccuracy in the power range indication will not adversely affect this function nor any of the other functions mentioned above.

Conclusion

Due to the WRNI being operated for a time without the latest discriminator voltage or general bias setpoints, this allegation is substantiated. The delay in adjusting these values, however, was not safety significant.

A.6.6.1 Containment Radiation Monitor Test Switch

Allegation

"The containment radiation monitor test switches were left in the test position after a functional test. This was discovered one month later during the subsequent functional test. If both of those two are in test, the recorder, the local meter, and the remote meter all read 3600 counts per minute. There is no indication anywhere of what is going on in containment, nothing as far as containment radiation levels either particulate or gaseous. My concern is that this is a classic violation of the procedure in that there is even a sign-off block that says that the switch is back in the off position and it is signed off on the surveillance, that both switches were left in test and nobody picked it up for thirty days. The operators were not paying attention to what that thing was doing. Normally there is a one decade difference in activity between those two rad monitors because of the physical location of their suction tubes. And the indications are typically in the ten to the four range, in the low ten to the four ranges, and one is in the low ten to the five range or close to it. And I cannot imagine how they could observe that for thirty days and not find anything wrong with it."

Discussion

The detectors in question are the Containment Gaseous Radiation Monitors, RM-8132B and RM-8262B. The "test" switch, used to inject a 60 cycle (3600 cycles per minute) signal into the electronics, was left in the "test" position as described. The licensee issued a Licensee Event Report (LER), 88-010, on October 2, 1988 and a violation was issued in Regional Inspection Report 50-336/88-22. In addition, the licensee initiated a Plant Design Change Request (PDCR), MP2-89-064, to change the manual "operate / test" switch to a spring return type of switch to prevent such a reoccurrence. The switches were obtained from the manufacturer of the radiation monitors and the installation is complete. However, inspector review of surveillance procedure SP2404AK, "Containment Process Radiation Monitoring Gaseous and Particulate Instrument RM-8123A/B and RM-8262A/B Functional Test", Rev. 0, dated October 1, 1986, noted the following:

1. The test switch is placed into the "test" position and later returned to the "operate" position in Step 7.1, "Loop Indication Verification" and in Step 7.2, "Electronic Test", but it does not require the technician to indicate such on the data sheet.

2. Step 8, "Restoration", contains a generic step to ensure that the switch has been returned to the "operate" position, again without a required signoff on the data sheet.

On July 13, 1989, RM-8262B was indicating 2500 counts/minute and RM-8123B was indicating 5000 counts/minute. The chart recorders showed the typical randomness in values as one would expect. A value of 3600 counts/minute (from a switch being left in the "test" position) is in the range of normal meter indication, and not the 1E4 (10,000) to 1E5 (100,000) values that the alleger specified. Therefore, an operator would not be expected to detect this value as being abnormal. However, procedure SP2619A, "Control Room Shift Checks", which are documented on OPS Form 2619A-1, Rev. 24, dated November 23, 1988, has a note on page 16 of the form that states that the values on recorders instead of meters should be used for all readings except the Spent Fuel Storage Area Monitors. Therefore, a 3600 value generated by the 60 cycle AC current which would not display the normal randomness and would show almost a constant value should have caused the operator to question its validity.

Conclusion

This allegation is substantiated. However, this condition was previously identified by the licensee, reported to the NRC and a citation issued. The switches were left in the test position for the gaseous channels on both containment radiation monitors as noted in the licensee's LER and the NRC's violation. Although the I&C surveillance procedure did not have signoffs for returning the switches to the test position as alleged, the procedure itself did specify the correct switch position multiple times as noted above. This indicates that the technicians did not follow the procedure. The normal containment gaseous activities are typically around the the test value of 3600 counts per minute and would not, in of itself, have caused operations personnel any concern. However, the control room operators should have noticed the abnormal recorder indication, especially considering that this condition existed for a period of one month prior to discovery and the readings were being recorded by three different operators (shiftly) each day.

A.6.7, A.6.8 and A.12.5 Acoustic Valve Monitoring System (AVMS) (related to A.6.22)

Allegation

1. The alleger stated that in 1985, a modification was made to upgrade the acoustic sensors to meet the equipment qualification requirements. He had a copy of a job order which showed that the manufacturer's recommended post-modification test was not accomplished. The data sheet in the job order was never completed.

2. The alleger stated that the I&C technicians were not adequately trained to understand the noise spectrum as they are required to compare various noise spectra to determine the acceptability of test results.

3. The alleger stated that the monthly functional test procedure is confusing. It was originally written for the old type of acoustic sensor (charge amplifier). Some of the steps (4 ma of the old sensor vs. 9 ma of the new sensor) were very difficult to accomplish.

Discussion

1. The alleger later corrected the date of the modification to be 1983, not 1985. The inspector reviewed the job order 283-924A.

   The job order indicated that the vendor recommended test No. 30354-I-02 entitled, "Unholtz-Dickie Signal Conditioner Modification Check-out Instructions", was not performed by the licensee and the data sheet on page 4 of the test instruction is blank. However, the licensee considered this test to be unnecessary because all steps in the data sheet were covered by the surveillance test (procedure SP 2410B) and the monthly functional test (procedure SP 2410A). Specifically, steps 3.2.5 and 4.1 were covered by 6.1.6.4 and 6.1.6.3, respectively, of SP 2410A, and steps 4.2 and 4.3 were covered by 7.12 and 7.24, respectively, of SP 2410B. The test records indicated that both the surveillance test and the functional test were completed during the 1983 refueling outage.

2. The AVMS is used to detect the opening (or leaking) of the power operated relief valve (PORV). Each AVMS consists of an accelerometer, that is mounted on the pipe downstream of the PORV, a charge amplifier that is mounted on the pressurizer blockhouse inside the containment, and a signal conditioner located in the control room area. The accelerometer picks up the vibration (or noise) signal from the pipe. The vibration signal is amplified by the charge amplifier and transmitted to the signal conditioner. The output from the signal conditioner can be connected to an oscilloscope or a spectrum analyzer. The spectrum analyzer measures the amplitudes versus frequencies (two dimensional signal) of the noise and can be plotted on a printer. As required by the monthly functional test, the I&C technician is required to compare the newly plotted spectrum with a reference spectrum to determine the acceptability of the test.

   The inspector interviewed four instrument specialists who were involved with the test of the AVMS. The results of the interview indicated that additional training in the AVMS appeared to be necessary, especially in the recognition of variables in the noise spectrum. The inspector also contacted the engineer responsible for the AVMS and the station training department and was informed that they are in the process of assembling training material for the AVMS.

3. The inspector discussed, with two instrument specialists, the adequacy of procedure SP 2410A. They all agreed that steps 6.1.6.3 and 6.1.6.4 are very difficult to accomplish exactly as indicated. When the "preamp bias adjust" is set at 9 ma, the valve monitor's meter will indicate somewhere near the 54% mark (within the 60 ±6% tolerance). If they adjust it to a point that the valve monitor's meter indicates 60%, the preamp bias will not read 9.0 ma ± 5%. This was brought to the I&C engineer's attention. The procedure is being revised to correct this deficiency. This is considered an unresolved item pending NRC verification of the licensee's revision of procedure SP 2410A (50-336/89-13-03)

Conclusion

The inspector concluded item 1 of this allegation to be substantiated. Although the alleger's statement is true that the licensee did not complete the vendor's recommended test data sheet, the essential steps of that test were covered by the surveillance test (SP 2410B) and the functional test (SP 2410A). Both of these tests were completed during the 1983 refueling outage in which the modification was completed.

Items 2 and 3 of this allegation are substantiated. The licensee is in the process of correcting these deficiencies. As a result, one unresolved item was identified.

Aspects of this allegation indicate that the modification package procedural steps were not explicitly followed. The general topic of procedural compliance is discussed in Section 6.4.

A.6.9 Loss of Reactor Coolant Pump Oil

Allegation

The alleger raised the following 3 concerns regarding the lubrication oil for the reactor coolant pump (RCP) bearing:

1. The washers for the RCP oil level indications are misplaced, which give erroneous oil level indications.

2. The alleger was concerned that the RCP bearing may have inadequate lubrication.

3. Because of the misplacement of the indicating washers, technicians received unnecessary exposures to correct the oil level problems. Each time a technician goes to RCP "A" to resolve an oil level problem he receives 400 mR. ALARA practices were not being implemented by the licensee.

Discussion

1. The washers are installed in the RCP oil stand pipes attached to the oil reservoirs and are used by maintenance personnel as a level indicator reference. The inspector reviewed a memorandum, dated March 14, 1988, from the alleger to his supervisor. This memorandum reported the oil level issues due to misplacement of the indicating washers. In addition, the maintenance history, dated October 1985, for the RCP oil level transmitters also indicated that the GE representative noted the indicating washer misplacement problem.

   During the 1989 outage, the licensee's Maintenance Department made a thorough survey of this issue. The results of the survey were documented in a memorandum from R. Bonner to J. Riley, dated April 22, 1989. This memorandum indicated that not only the washers were misplaced, but the oil level transmitters reference point also deviated from the design as follows:

RCP MOTOR OIL RESERVOIR			ACTUAL			
SUMP	DEVICE	DESIGN	"A" RCP	(+/-)	"B" RCP	(+/-)
UPPER	WASHER	24.5"	24.625	0.125	24.25	-0.25
	TRANSMITTER	16.5"	16.5625	0.0625	16.5	0
LOWER	WASHER	12.125"	12	-0.125	11.875	-0.25
	TRANSMITTER	4.125"	4.25	0.125	4.3125	0.1875

RCP MOTOR OIL RESERVOIR			ACTUAL			
SUMP	DEVICE	DESIGN	"C" RCP	(+/-)	"D" RCP	(+/-)
UPPER	WASHER	24.5"	24.5625	0.0625	24.5	0
	TRANSMITTER	16.5"	16.625	0.125	16.5	0
LOWER	WASHER	12.125"	12.125	0	12.125	0
	TRANSMITTER	4.125"	4.0625	-0.0625	4.125	0

The most significant deviation is the lower oil sump level of RCP "B". The washer and transmitter deviate in the opposite direction, resulting a total deviation of 0.4375", i.e., when the craftsman filled the oil to the "full-level" mark (washer), the control room indicator showed the level was 0.4375" below the proper level.

The misplacement of the indicating washers was not corrected during this outage because the oil analysis indicated the original oil is still in good condition. Replacement of the washer requires draining of all oil, resulting in an increased volume of radioactive waste. To compensate, the licensee generated a set of tables, correlating the indicated level and the actual level. Proper use of these tables by the maintenance and control room personnel will eliminate the disagreement problem between the indicating washers in the RCP and the level indicators in the control room. The washers will be repositioned when the oil in the pump is changed.

2. The inspector reviewed the correlating oil level tables. The low-alarm is set at 78% of the indicating level in the control room and the low-limit is at 1" below the design full-level mark. The worst case is the "C" RCP lower oil reservoir level. The low-alarm set point correlates to an actual level of 0.65" below the design full-level mark. At the low alarm setpoint, there is still a 0.35" margin in the "C" RCP. This assures the pump bearing has adequate oil.

3. For RCP "A" lower reservoir, the indicating washer is 0.125" below the "full-level" mark while the transmitter is 0.125" above the design point. This results in a total mismatch of 0.25". i.e., after the maintenance personnel fill the lubrication to the "full-level" mark, the control room indicator still shows the level to be 0.25" below normal. This mismatch could result in unnecessary trips to the RCP "A" to check the oil level. However, the tables developed during the last outage to correlate the indicated level to the actual level should eliminate confusion regarding the RCP oil level.

Conclusion

Items 1 and 3 of this allegation are substantiated but do not have any safety significance. The licensee had taken corrective actions by generating a set of tables to correlate the indicating washers and the control room indicators. Item 2 is unsubstantiated.

A.6.10.1, A.11.6, C.3.9 Reactor Coolant Pump Resistance Temperature Detectors (RCP RTD)

Allegation

1. The alleger stated that excessive oil leakage in RCP "A" could go to the containment floor or other equipment, this plus the high temperature of the reactor coolant and high voltage of the pump motor could lead to a fire hazard in the containment. The alleger said that during the last operating cycle (from February 1988 to February 1989), 25 gallons of oil had been added to RCP "A" motor.

2. The RCP resistance temperature detectors (RTD) were bought when the pump motor was built by GE many years ago. The resistance vs. temperature curve used for previous calibrations of the RTD's was substantially different from that of today and, therefore, the accuracy is a concern.

3. The alleger stated that the "C" RCP oil level alarm setting was changed in 1988 to eliminate the in-and-out alarm problem.

Discussion

1. The inspector reviewed the maintenance records for the oil level history for RCP "A" for the last operating cycle. The oil level history indicated that the level of the lower oil reservoir was relatively steady during the last operating cycle. The level of the upper oil reservoir fluctuated substantially during that period. It dropped to 81% on April 9, 1988, before oil addition and then dropped to 78% (alarm set point) on October 11, 1988, before another oil addition. The maintenance records indicated 3 oil additions were performed during that period, 5 gallons on April 11, 1988, 5 gallons on October 12, 1988 and 4 gallons on October 25, 1988, for a total of 14 gallons added to the upper oil reservoir. Each time oil was added, apparent oil leakage was also checked. The licensee determined that all oil was leaked through the drip pans to the sump. The records

also indicated that on February 6, 1989, during the refueling outage, approximately 82 quarts of oil were removed from the east side sump (serving RCP "A" and RCP "B"). The licensee also found that the oil leakage was due to loose fittings in the tubing. This was repaired during the 1989 outage and the level has remained steady since the outage.

Further, regarding the alleger's fire hazard concern, the Millstone 2 fire hazard analysis considered 128 gallons of lube oil plus 32 gallons of transient lube oil for each RCP in the Fire Hazards analysis.

2. The RTD's used in the RCP motor are manufactured by MINCO. Before RCPs "C" and "D" motors were replaced, the licensee's I&C technicians had been using the temperature vs. resistance curve in the RCP technical manual. This curve is basically a straight line drawn on linear graph paper. When the RCP motors were replaced, the licensee obtained from MINCO a new temperature vs. resistance table. This table is more accurate than the hand drawn curve in that it contains digitized resistance values for each tabulized temperature. The inspector compared the new calibration data sheet (based on the table) with the old data sheet (based on the curve) and found that the maximum difference is 1.27 ohms at the 50% point. This represents an error of approximately 2.5°F. This small error does not create a safety concern relative to the RCP bearing temperature; however, it seems appropriate to use the improved accuracy table.

3. The inspector reviewed a Setpoint Change Request Package SCR No. 2-88-032 and a statement by Millstone engineering, dated July 11, 1989 which indicated that during September 1988, the upper oil reservoir level for RCP "C" fell below its setpoint of 78%. The licensee's engineering performed an evaluation of the condition and determined that sufficient margin existed to allow lowering the setpoint to 76.3%, while still providing adequate oil level for normal and transient pump operations. At that time, the licensee determined that a change in setpoint was preferable to an entry to the containment to add oil, based on ALARA and safety considerations. Later, some other actions required containment entry, and the licensee chose to add oil instead of implementing the setpoint change. Therefore, no oil level alarm setpoints were changed for the RCP.

Conclusion

Item 1 is partially substantiated in that the "A" RCP did experience excessive oil leakage; however, it could not be substantiated that this created an unacceptable fire hazard. Item 2 is substantiated; however, the maximum error is only 2.5°F, there is no safety concern. Item 3 is not substantiated because the setpoint change was not implemented.

A.6.10.2 Reactor Coolant Pump Temperature Circuits

Allegation

On December 20, 1988 it was alleged that the cables for monitoring the temperatures in Reactor Coolant Pump (RCP) "C" were deteriorated from oil leakage so severely as to require replacement and the company did not respond to this need until an allegation had been made to the Nuclear Regulatory Commission (NRC).

It was also alleged that one out of sixteen pairs of temperature monitoring leads was reversed on the replacement motor for RCP "C" and the same error had to be corrected on the "D" pump replacement motor after it had been installed in containment. This latter issue is addressed in allegation A.6.24.4 "Reactor Coolant Pump Instrumentation".

Discussion

Plant management was notified of the problem by one of the employees in a three part memorandum on May 4, 1987, approximately two months after the 1986 refueling outage was over. The inspector's review of the Instrumentation and Control Department (I&C) loop folders and maintenance history indicates only two instances of resistance temperature detector (RTD) cable problems prior to the 1986 outage. No problems were associated with the "C" pump until then. Five problems involving the "C" pump occurred during or shortly after that outage. The RTD cables for all four pumps were replaced during the 1988 refueling outage.

Post-refueling notes from the files of the person who was the I&C department head during the 1986 outage indicate that replacement of these cables should be considered. A response to the May 4, 1987 memorandum, dated December 14, 1987, indicates that sacrificial splices were being considered as a method of repair. A March 23, 1988 planning document indicates that the decision to replace the cables had been made. Subsequently, the NRC was informed of a concern regarding RCP oil leakage in an April 4, 1988 conversation with the alleger.

Conclusion

Documentation of the decisions made in the seven month period from May 1987 to December 1987 was not found. This lack of documentation tends to support the allegation that the licensee was not responsive to the original May 4, 1987 memorandum. However, the fact that few difficulties had been documented before the 1986 refueling indicates that the licensee had no prior knowledge of the problem. On balance, the allegation that the licensee did not show proper concern for the RCP until the NRC was notified is unsubstantiated.

It should be noted, however, that this is another instance of an employees concerns being submitted on an uncontrolled 3 part memorandum with an associated untimely response.

A.6.11.1, A.6.11.2 and A.12.6 RCP Speed/Cable Support

Allegation

1. The alleger stated that the reactor coolant pump (RCP) underspeed instruments were not calibrated to a known speed measuring instrument (e.g., tachometer) that is traceable to the National Bureau of Standards (NBS).

2. The conduit run from the preamplifiers to the proximity probes for RCP "C" and RCP "D" were not properly supported (about 16 feet hanging in the air). This is a seismic concern.

3. Excess cable in the condulet (LB) may be bent beyond the minimum bending radius for the cable.

Discussion

1. The RCP underspeed sensing system provides input to the reactor protection system (RPS) to trip the reactor when the RCP speed falls below the setpoint. Each underspeed sensing channel consists of a proximity probe, a pulse transmitter and signal processor. The proximity probe is located in the RCP motor, the pulse transmitter is located inside the reactor containment, and the signal processor is located in the control room. A disc mounted to the RCP shaft has 44 slots around its perimeter. Each time a slot passes the proximity probe, a pulse is generated. Hence, each revolution of the RCP shaft causes 44 pulses to be generated. The function of the pulse transmitter is to amplify the pulse signal for long distance transmission. The signal processor provides pulse shaping, pulse-per-second counting (frequency), signal conditioning (frequency to voltage) and compares this to the setpoint and provides a trip signal to the RPS when the frequency falls below the setpoint.

   Calibration of the speed sensing channel is based on the licensee's procedure SP 2402K, entitled, "Reactor Coolant Pump Speed Sensing Channel Calibration". Currently, the calibration is done at the signal processor only. However, when the inspector traced SP 2402K back to Revision 0 (effective before September 6, 1980), he found that the pulse generator was required to be connected to the input of the pulse transmitter located inside the containment. Revision 1 of SP 2402K was issued September 6, 1980 to delete this step. According to the I&C department, this step was removed because:

   a) There is no adjustment in the pulse transmitter.

   b) The proximity probe and the pulse transmitter are fail safe devices, i.e., a short circuit or an open circuit causes the pulse signal to go to zero. This will cause a reactor trip.

   c) Working at the pulse transmitter causes the I&C technician to be exposed to radiation.

   The licensee contacted Calvert Cliffs, which is also a Combustion Engineering reactor and uses the same RCP speed sensing system. They also calibrate at the signal processor only.

   In summary, Millstone 2 does not use tachometers or other speed measuring devices with accuracy traceable to the NBS to calibrate the proximity probes or the pulse transmitters because no adjustments are required for those devices and the pulses per revolution of the RCP shaft are fixed (44 pulses per revolution). However, the signal processors are calibrated

with instruments with accuracy traceable to the NBS. In addition, the licensee provided justification which shows that the proximity probe and the pulse transmitter are fail safe (failure will cause a reactor trip) for their functions in the RCP speed sensing system.

2. The RCP "C" motor and the RCP "D" were replaced during the 1986 and 1989 refueling outages, respectively. As a result, the conduit runs between the pulse transmitter and the proximity probes had been modified. For the old pump motors the conduit connected each pulse transmitter to a junction box before it went to the proximity probe. For the new motor, the conduit goes from the pulse transmitter directly to the proximity probe. As a result, the unsupported span length of the conduit increased.

   The length of the unsupported conduit could not be verified during this inspection because of the inaccessibility of the containment during plant operation. The cable inside the conduit is a QA Category I item. The seismic integrity of the new configuration does not appear to have been evaluated. The licensee stated that the old conduit support was seismically qualified; however, the licensee was unable to show the inspector the seismic requirements in the RCP motor modification package.

   During the two weeks of inspection, the licensee provided two documents for the inspector's review regarding the seismic concern. The first one is a memorandum from G. E. Komosky to J. D. Becker, EN2-89-101, dated April 27, 1989. The second one is a memorandum from M. A. Powers of NUSCO Engineering Mechanics to F. R. Dacimo, PSE-EM-89-198, dated July 19, 1989. Both documents do not contain adequate data to demonstrate the seismic qualification of the new conduit installation. To address the immediate safety concern, the licensee was able to show that: 1) both short circuit and open circuit of the cable or failure of the proximity probe will cause the reactor to trip; 2) a memorandum generated by the engineering department states that there are no safety related instruments in the vicinity that can be damaged due to the loss of seismic integrity of the conduit.

   No seismic qualification for the new conduit installation constitutes a violation of 10 CFR 50 Appendix B Criterion III, "Design Control", which states in part, "Measures shall be established to assure that applicable regulatory requirements and the design basis, as defined in paragraph 50.2... for the structure, systems and components to which this appendix applies are correctly translated into specifications, drawings, procedures and instructions..." (50-336/89-13-04).

3. Because of the rerouting of the conduit discussed above, it is obvious that excess cable length exists in the new installation. It is very likely that this excess cable (20 to 30 feet of Microdot coaxial cable) is packed into the small condulet (LB) causing the Microdot cable to be bent beyond the minimum bending radius. Because of the inaccessibility of the reactor containment during operation, this could not be verified during this inspection. To address the safety concern of this allegation, the licensee

generated a memorandum (MP2-I-1385) from J. Becker to F. Dacimo, dated July 20, 1989. This memorandum provided an evaluation for the worst condition that the Microdot cable was bent severely enough to crimp or break the coaxial cable, causing an open circuit or a shorted circuit. This condition will cause a loss of pulse signal to the signal processor, subsequently causing a reactor trip.

The minimum bending radii for the microdot coaxial cable as recommended by the manufacturer are "3 inches for the probe lead and 1.5 inches for the extension cable. This item is considered unresolved pending NRC verification of the bending condition of this cable when Millstone 2 containment is accessible (50-336/89-13-05).

Conclusion

All three items of this allegation are substantiated. All immediate safety concerns are resolved as addressed in the Discussion section of this allegation. One violation and one unresolved item were identified as a result of this allegation.

A.6.12.1 Out of Date or Inaccurate Drawings

Allegation

Many schematic drawings in use at Millstone Unit 2 are out of date or do not reflect the as-built condition of equipment in the plant. Technicians found equipment wired differently than the available schematics. Problems in drawings apply to NUSCO drawings, architect/engineer drawings, and vendor supplied drawings including those located in vendor technical manuals. Requests by the alleger to change NUSCO drawings have gone unanswered and there is no mechanism to get vendors to update incorrect prints.

This allegation is related to allegations A.6.12.2 (see allegation A.6.24.4), A.6.12.3 and A.6.13 discussed elsewhere in this report which identify two specific examples of incorrect prints.

Discussion

This issue was reviewed generically by the inspector as it applied to the I&C shop. Through discussions with I&C personnel, review of drawing controls in the I&C shop, and overall control of vendor technical manuals, the inspector attempted to determine the potential to have incorrect drawings in use while performing work in the plant. Electrical schematic drawings were located in several places in the I&C shop including electrical schematic books, instrument loop calibration folders, miscellaneous prints in file drawers, large print drawing "sticks", and vendor technical manuals located both in the shop library and at technician work stations. These drawings were reviewed against drawings maintained by Nuclear Records Section.

The inspector also reviewed methods for updating drawings as used by Unit 2 engineering and for controlling and updating vendor technical manuals as controlled by Station Document Control. In addition, the inspector did limited overview inspections of the I&C shops in Millstone Units 1 and 3 to determine if their mechanisms for drawing control were different from those in Unit 2.

Although no technically inaccurate prints were identified in use during this inspection, sufficient deficiencies were noted in the licensee's document control and corrective action systems to substantiate the allegation that outdated prints are at least occasionally used by technicians although current drawings are readily available. Drawings available to the technicians in the I&C shop including those maintained loose bound schematic books, file drawers, instrument loop folders, drawings on stick racks, and in some case a technician's work station were uncontrolled. No system was in place to identify these drawings and to ensure that they were maintained up to date. Although some effort was made to ensure that loop diagrams in loop folders were maintained current, no formal system was in effect to assure this. Although loop folders were marked "uncontrolled" and "for information only", discussions with technicians indicated that they used the folders routinely to perform work. Technicians also stated they routinely used the drawings in the shop rather than obtaining controlled drawings from nearby Nuclear Records. The brief inspections of Units 1 and 3 indicated that drawings available to technicians were controlled, this also included instrument loop folders maintained by Unit 3. A selected sample of safety related drawings on Unit 2 drawing "sticks" was compared with the latest revisions available in Nuclear Records with the following results:

	Revision in I&C	Latest Revision in Nuclear Records
--E-18767-411-302 Trip Unit Interconnection Module Wiring Diagram	6	9
--E-18767-411-011 Reactor Protective System Pin Assemblies Wiring Diagram	4	5
--E-18767-411-003 Reactor Protective System Fundamental Diagram	5	7
--E-18767-411-033 Reactor Protective System Trip Status Panel Assembly	5	6
--25203-28500 Sheet 200 LT 206 Boric Acid Tank 8A Loop Diagram	4	4

--25203-28500 Sheet 79 TE 112 CA, TC Loop 1A and TE 122 CA, TC Loop 2A to Channel A RPS Loop Diagram	9	9
--25203-28150 Sheet 1 Emergency Safety Features Actuation System Logic	1	2
-25203-29103 Sheet 1 Main Vent Effluent Radiation Monitoring System Flow Diagram	6	6
--25203-31118 Sheet 2 Connection Diagram Radiation Monitoring System	1	2

In addition to the above examples, the allegers and other technicians stated that they frequently found drawings obtained in the shop to be incorrect. Technicians further stated that they rarely used Nuclear Records to obtain drawings unless they ran into a problem. To compound the situation, Nuclear Records had the capability to assure that they have the latest revision to the drawing by the use of a computer terminal and the licensee's "GRITS" system. However, GRITS was not used routinely. In addition, the inspector received complaints from both Unit 2 and Unit 3 personnel that GRITS was difficult to use.

Failure to control drawings and to assure that the most up to date version of drawings is available at work stations is contrary to 10CFR 50, Appendix B, Criterion V and is considered a violation (50-336/89-13-06).

Although a system had been in effect for about a year to control vendor technical manuals, Unit 2 I&C technicians did not seem to completely understand and use this system. Controlled technical manuals were maintained in the Unit 2 I&C library. These manuals had been taken from the shop area where they were controlled by the technicians and placed into a new system. Technicians stated that they had difficulty in finding manuals and using the new system. They further stated that they had received no training. In addition, uncontrolled vendor manuals were observed at some I&C work stations. Although out of date vendor drawings were not identified during this inspection, there appears to be a problem in this area too.

The second part of the above allegation that requests to update drawings have gone unanswered and that there was no mechanism to update vendor manual drawings is partially substantiated. While two systems exist within the station to update drawings, their use in Unit 2 appears to have only been partially effective.

Drawings can be changed or at least evaluated for the need for a change by submitting a Northeast Utilities "Drawing Change Submittal Request" form (DCS/DSR). The DCR/DSR is a system that tracks such requests and assures they get done or at least properly evaluated. Records of DCR/DSR logs for 1988 and 1989 indicated that 216 DCR/DRS's were submitted in 1988 and 115 were submitted so far in 1989. Thirty four of the 216, 1988 submittals and 21 of 115, 1989 submittals appear to be requesting drawing changes to reflect as-built conditions or requesting evaluations of proposed plant design changes. These changes were submitted by Unit 2 engineers or the I&C engineer. It could not be determined how many of these were identified by [illegible] technicians or how many technician identified items were actually place[illegible] the DCR system.

I&C technicians who observe as-built discrepancies from drawings either notify the I&C engineer or their supervisor verbally or by a company three part memorandum. This system is very informal and is not tracked. There is no assurance to the technician of feedback and the requests are not formally tracked. There is indication that some of these problems may have been lost and never reached the DCR system, this could not be substantiated because of the informality of the system. It should be noted that I&C technicians in Units 1 and 3 can submit their own DCR's directly.

A new I&C supervisor was appointed to the Unit 2 I&C shop and he recognized that some identified deficiencies may not have been properly tracked for this reason. He has started an I&C work list which more formally tracks various I&C work items. Although an improvement, this system is still somewhat informal and does not completely assure that drawing problems identified by technicians are completely tracked.

In the case of drawings in vendor technical manuals, unless there is a contractual relationship, there is no assurance that drawings in vendor technical manuals will be updated. Within the last year a system has been set up to control vendor technical manuals. This system will assure that manual changes sent in by various vendors will be evaluated and sent to controlled copies of the manuals on site, if appropriate. This system also allows local updating of manuals if errors are found. A NUSCO form SF 351 can be submitted to correct information in vendor technical manuals. Since its inception in 1988, Unit 2 has submitted 6-SF 351's; Unit 1 has submitted 8; and, Unit 3 has submitted 27. The low number of submittals from Unit 2 and discussions with Unit 2 I&C technicians indicate a low awareness of the existence or use of this system to get vendor technical manuals permanently corrected. This coupled with the above discussion indicates a general lack of training on the overall use of the vendor technical manual control system by Unit 2 I&C technicians.

The inspector compared I&C shops at Millstone Units 1, 2 and 3 to see if appropriate drawing control systems are in place. The comparison revealed the following:

	Unit 1	Unit 2	Unit 3
Loop Calibration Folders Controlled	Partially	No	Yes
I&C Procedures Controlled	Yes	Yes	Yes
Drawing Stick Racks in Lab Controlled	None	No	Yes
Drawings in File Drawers Controlled	Yes	No	Yes
Drawing Books Controlled	Yes	No	None
Aperture Cards Controlled	None	None	Partially
Uncontrolled Technical Manuals at Work Stations	Yes	Yes	No
I&C Technicians Familiar with and use DCR/DSR Process	Yes	No	Yes
GRITS Computer System for Determining Latest Drawing Revisions is Routinely Used	No	No	No

The above comparison indicates that Unit 2 I&C shop is not as rigorous in ensuring that up-to-date drawings reflecting as-built conditions are available to their technicians.

Conclusion

The lack of drawing control and out of date drawings found in the Unit 2 I&C Shop and discussions with technicians substantiated the allegation that some drawings do not reflect the as-built conditions of plant equipment. The allegers gave some examples of out of date drawings and the inspector readily identified several others to validate this concern. Corrective actions systems in place to correct this problem such as the DCR/DRS system and the vendor manual control system appear to be underutilized by Unit 2. There is also a lack of training on these systems.

The three part memorandum is too informal to assure that all identified deficiencies will be tracked and resolved. Other more formal processes for corrective actions existing onsite are not used by individuals at the technician level.

The comparison of Unit 2 I&C with Units 1 and 3, indicates that there are significant differences in the drawing control systems for I&C technicians onsite.

A.6.12.3 and A.6.13 Outdated NMC Drawings

Allegation

"Nuclear Measurements Corporation radiation monitors (for example RM8262, RM8123 and those type process monitors) where the prints do not represent what is taking place. The problems are true for all of that type radiation monitor, NMCs. They're vendor supplied wiring schematics that are representative of the way the thing is wired. But here are some significant problems with them, and I think that we need to get them updated and make them representative of what we're dealing with. The drawings don't match the as-built. For radiation monitors 8123 and 8262, the magnahelic indicator that is being used is 19289900 and is not the same as called for on the print. The print number is C00030.

Recent spiking problems associated with the steam jet air ejector radiation monitor have been traced to the lack of suppression capacitors across the horn contacts. I made a check of most of the remaining monitors and found seven more without capacitors. If we get a horn from NMC, it does not have a capacitor. If you go down in the plant and pull a horn out that's been there for ten years, it's got a capacitor across it. If you look at the NMC print that I told you was deficient, the horn capacitor doesn't exist. There isn't one in the print. The capacitors are not there; they should be there.

When I got here they were putting these key switches in that allow you to bypass the horn when you're testing it or when there's an alarm condition. You put the key in, you bypass it, and you get in a research and see what the problem is. We don't have correct prints for that.

The issue here is incorrect information, vendor information that's not getting down to the working levels, drawings that don't represent as-built."

Discussion

The Magnahelics (flow meters) used by NMC are purchased from Dwyer Instruments, Inc. as Dwyer part number 19289900, the number that is stamped on the meter. NMC then modifies the meters by adding a switch and assigns its own unique part number - currently 0050155. Part number C000030 on NMC drawing D401536, Rev. C, that the alleger referred to was correct at the time the drawing was issued, but was changed when NMC went from a six digit to a seven digit part numbering system. The parts are identical. The vendor responded to a letter from the licensee on January 31, 1989, with this clarification. The inspector noted that the I&C Spare Parts List did show the correct (50155) part number.

Licensee discussions with NMC indicate that at the time of initial plant startup (1974-1975), NMC installed capacitors on many of the monitor horns for noise suppression. At that time, the vendor drawings were not updated either by the vendor or by site personnel. In a letter, dated January 27, 1989, from NMC to Unit 2 I&C, NMC recommended that some type of noise suppression be utilized on devices such as horns. In addition, NMC will provide updated versions of schematic drawing C401702 and assembly drawing C401700 reflecting this recommendation.

Horn bypass keys were installed in NMC radiation monitors as approved in Plant Design Change Request (PDCR) 2-19-75, dated February 19, 1975. The modification was completed on August 4, 1977. Inspector review of current vendor drawings revealed that the vendor prints have not been updated to reflect the modified design.

Conclusion

This allegation is substantiated. Site administrative procedure ACP 3.23, "Control of Vendor Technical Manuals" had not been implemented at the time these modifications were made. However, the current revision, Rev. 2, dated September 1, 1988 (and at least as early as Rev. 1), states that revisions to vendor technical manuals (of which the drawings are part) may be requested by any plant personnel who identifies the need for the revision using Station Form 351, "Vendor Technical Manual Change Request." Although the inspector could not determine whether or not technicians had discovered these problems in the past, when the alleger discovered the drawing discrepancies, by procedure, he should have initiated a Form 351 to have the appropriate updates performed. Lack of proper documentation of these specific changes did not have any safety impact on the proper operation of the equipment or the facility.

A.6.12.4 QC Receipt Inspection is Non Existent at Millstone

Allegation

This allegation appeared to be a general allegation. However, in examining the transcript of the interview, this allegation relates to a discussion of a component on a radiation monitor detector that identified one part number on the invoice which did not match the part number identified on the vendor drawing.

Discussion

The Supervisor, Procurement Inspection Services, is responsible for receipt inspection of incoming parts and materials. Receipt inspection is performed in accordance with Procedure No. QSD-3.03, Performance of Receipt Inspection Activities. This procedure applies to all Category I systems, structures, and components. Incoming material is inspected for compliance to all purchase order requirements. A physical inspection of the item(s) is performed to the generic criteria on the Material Receiving Inspection Report (MRIR). The material is inspected to verify that no damage occurred during shipping. Performance of the Receipt Inspection is conducted utilizing the requirements from the purchase documents and the MRIR Form. All documents, test/inspections are recorded as well as the results of all tests/inspections performed on site are recorded on the MRIR Form. The vendors approved status is verified at the time of receipt inspection by checking the approved supplier list. Acceptance of the material is documented on the MRIR Form and by attaching a green tag. Nonconforming materials are red tagged, stored in a hold area and dispositioned in accordance with procedure NEO-3.05, Nonconformance Reports.

Procurement Inspection Services is staffed by 12 individuals with an aggregate of 223 years of quality experience (average 18 years/person). The individuals represent a diversified field of experience in mechanical, electrical and civil engineering. Material inspections are performed in accordance with approved procedures utilizing, as necessary, calibrated instruments. Calibrated instruments are maintained in the receipt inspection department or are obtained from other departments for use.

Quality Service audits are performed every two years by the supervisor, Assessment Services. For these audits the following items are researched: The Millstone Point Serial Numbers; Material Issue Forms; Material Receipt Inspection Reports; Purchase Orders; Purchase Requisitions; and the applicable specifications and design documents. Each of these are reviewed against the applicable procedures, Topical Report, and the ANSI Standards. Audit identified deficiencies require management response on the corrective action.

With regard to the specific instance of a product part number not matching the part number on the vendor drawing, the vendor had changed the part number but had not changed the part. The correct part was received with a different number. In addition, the vendor had obtained the part from another manufacturer and had modified it for use on the radiation monitor. The alleger noted the Manufacturer's model number and believed this to be the radiation monitor vendor's part number.

Conclusion

The allegation is unsubstantiated. The inspection found that the Procurement Inspection Services has a well controlled program for receipt inspection. It is staffed by a competent, experienced staff and audits by the supervisor, Assessment Services identify deficiencies which are promptly addressed.

With regards to the specific instance that is believed to have initiated the allegation, the alleger erroneously identified a manufacturer's model number as the vendor's part number.

A.6.14 Diesel Generator Cooling Service Water Flow

Allegation

On December 30, 1988 it was alleged that the Service Water System (SWS) flow to the diesel generator runs much higher than the indicator is capable of reading and that this situation causes difficulty in determining saltwater flows during Inservice Inspection (ISI). It was also alleged that this situation was the result of changes in water temperature and the height of the tide and the resolution of this issue was beyond the capabilities of the technician assigned to it.

Discussion

In resolving this issue the staff used Systems Description M2-OP-SEC-2326, Station Procedure SP21102, Station Procedure OP2326A and FSAR Figure 9.7-1, Sheet 2.

The plant was originally designed such that salt water flow to the diesel coolers was only provided when the diesel generators were operating. Because of biological fouling and corrosion problems, it was decided to provide some flow (approximately 150 gpm) when the diesels were not operating.

This flow is provided by an orificed line with a bypass valve around the orifice that opens when the diesel starts (see Figure 6.14). To reduce pressure surges on the cooler tubes, a second bypass that carries approximately 1200 gpm when the diesels are in standby, was provided around the diesel coolers. In the winter, when the Reactor Building Closed Cooling Water (RBCCW) heat exchangers require little flow, the total flow through the diesel system exceeds the 1400 gpm top end of the flow indicator.

This excess flow has not had any noticeable effect on the flow instrumentation (as determined from calibration records) and does not affect ISI or IST because the 1200 gpm bypass is closed during testing. In this regard, flow balancing of the SWS is not critical because non-safety loads are isolated during emergency operations and the RBCCW flow changes automatically on temperature demand (over a range of approximately 9000 gpm) in non-emergency situations.

Conclusion

This allegation was partially substantiated. The staff has concluded that SWS flow to the diesels does exceed the indicator range during normal operations but does not exceed the indicator range during testing or emergency operations. Furthermore, it could not be substantiated that water temperatures and tidal heights have any significant affect on the flow when compared to that of the RBCCW temperature control. Because these facts are well documented in the plant literature that is used for training of the operators, the staff does not agree that the resolution of this matter was beyond the capability of a qualified technician and we conclude that this portion of the allegation is also unsubstantiated.

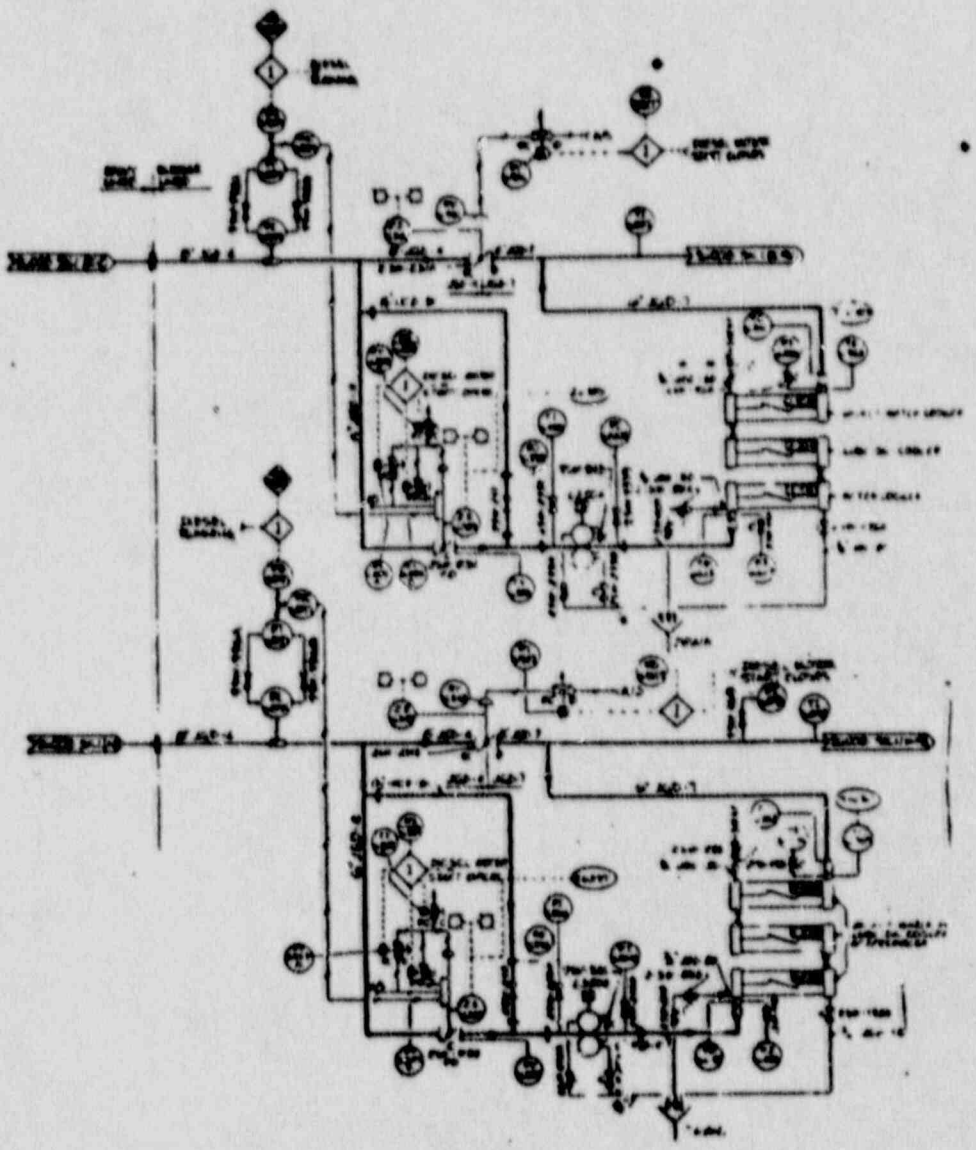

SERVICE WATER COOLING TO
DIESEL GENERATOR HEAT EXCHANGER

Figure 6.14

A.6.15, A.7.2, A.12.1,2&3 Incore Analysis on Linear Heat Generation Rate

Allegation

The alleger raised three concerns related to the In-core Analysis (INCA) program and the licensee observance of core linear heat generation rates (LHGR):

1) The plant was experiencing problems with the INCA program and operating at 96% power. Plant technical specifications limit power to some lower value when the INCA program is not available.
2) The RPS Channel A input to the Power Ratio Calculator (PRC) has been bypassed for at least two years. It normally provides the highest value input to the PRC, and having it disconnected provides a less conservative calculation of core LHGR.
3) Manual verification of LHGR using the excore instruments was inadequate because the excore instruments had not been calibrated to the incore instruments at equilibrium xenon conditions.

Discussion

During the performance of procedure T89-12,"Power Ascension Test-Cycle 10," the licensee encountered a problem with the INCA program. The fuel vendor had supplied inaccurate fitting coefficients for calculation of the integrated radial peaking factor, and calculations of the LHGR in the very top and bottom of the core were found to be in error. INCA values were still accurate in the central area of the core, where margins to thermal limits are much lower. While the fuel vendor calculated the new fitting coefficients, the licensee added augmentation factors to the INCA program to ensure conservative calculations of radial peaking factors. The licensee monitored acceptable LHGR values by using the excore instrumentation. Unit 2 Technical Specification 3.2.1 allows operation with LHGR being monitored by either the incore instrumentation (using the INCA program) or the excore instruments, in which the power limits of Technical Specification Figure 3.2-2 must be followed. The inspector verified that Figure 3.2-2 allows operation up to 100% of full power using the excore instruments to monitor LHGR.

The licensee continued power ascension testing, monitoring acceptable LHGR with both the INCA program and with the excores. Within the week, the fuel vendor supplied the correct fitting coefficients, and the INCA program was modified to ensure accurate thermal margins existed over the entire length of the core. The inspector reviewed licensee records kept during the time span in question and determined that at no time had a power distribution limit been violated.

Manual verification of acceptable LHGR values and adherence to Figure 3.2-2 is accomplished by monitoring the Power Ratio Recorder, which displays the output of the Power Ratio Calculator (PRC). Figure 3.2-2 prevents exceeding LHGR thermal limits by limiting the Axial Shape Index (ASI) as core power increases. The ASI is a measure of the power being generated in the top of the core versus the power being generated in the bottom of the core. ASI is calculated by the PRC from inputs supplied by Channel X and Channel Y excore nuclear instruments. The PRC then compares ASI to the power level of the core to make sure the Technical

Specification limits of Figure 3.2-2 are not exceeded. The PRC determines the power level of the core from inputs supplied by the four RPS nuclear instrumentation channels (A,B,C and D). RPS Channel A has been bypassed from the PRC since March 28,1988, due to an excessive amount of electronic noise in the circuit downstream of the isolation amplifier which supplies the Channel A signal to the PRC. The noisy signal being supplied from the Channel A isolation amplifier was causing numerous spurious alarms, and the jumper to bypass Channel A was approved by the Plant Operations Review Committee on March 30,1988. The inspector reviewed applicable licensee documentation of the problem and determined that a work order to repair the excess noise on the line has been generated by the licensee's I&C Department. The PRC still determines core power level from inputs from excore instrument RPS Channels B,C and D.

The inspector also reviewed licensee documentation of the power ascension test to verify that the excore instruments had been calibrated while they were being used to monitor linear heat rates. T89-12 required calibration of the power range safety channels at 55-65% power while the core was at "near" equilibrium xenon conditions. The inspector discussed the matter with a licensee Reactor Engineer, who provided documentation that showed the calibration had occurred with the plant at 55% power and xenon within 96% of full equilibrium conditions. The inspector noted that the requirements of T89-12 had been satisfied and had no further questions.

Conclusion

The allegers assertion that the licensee had a problem with the INCA program during power ascension testing was valid. Therefore, the first part of this allegation is substantiated. However, the statement that the technical specifications limited power to some lower value was not substantiated. Inspector review noted that the licensee had recognized the problem and acted in a conservative manner while the problem existed.

The alleger's second concern involved the bypassing of the Channel A input to the PRC. The alleger believed this to be the most conservative channel because it normally read the highest value, but this higher signal was due to the electronic noise in the circuit. Channel A still supplied a normal signal to the Reactor Protection System, and only the signal from the isolation amplifier downstream to the PRC was bypassed. RPS Channels B,C and D still supplied the PRC and provided sufficient information to the PRC to ensure ASI limits were not exceeded. The allegation that the PRC provided less conservative protection because of the Channel A bypass is substantiated; however, it does not represent a safety concern.

The alleger also believed that using the PRC for protection against exceeding thermal limits was not conservative because the excore instruments supplying the PRC had not been properly calibrated. Inspector review of the power ascension test program and discussion with licensee reactor engineers revealed that the excore NI channels had been properly calibrated per procedure T89-12. This portion of the allegation is unsubstantiated.

A.6.17 and A.7.4 Disconnection of Radiation Monitor Horns

Allegation

"The problem that we're dealing with here is the disconnecting of the horns by the people in the area because they don't want to listen to the horn chirp. You can go to the control room and you can check out a key and you can go down and shut the horn off. By procedure, when an alarm comes in, the control room operations people acknowledge it. They generally log it in their log, and they're required to go down and research what's going on with that alarm. They're also required to take a key, check it out, go down and bypass it. The horns have physically been pulled out of their housing so they won't blast. The control room has an alarm cut out switch in the back of the radiation monitor. You can put that thing in alarm defeat. What you do then is allow other radiation monitor alarms from the other area or process monitors to come in and alert you to the fact that there is one out of spec. When you put the unit in alarm defeat it really basically inops the alarm feature. So as a feature of that, when you put in through the alarm defeat position, it blows the horn in the area where the monitor's local indication is and the red light and the horn come on. What happens is whoever's down in that area doesn't like to listen to it. He has to go all the way to the control room, check out a key, and come all the way back and put a key in. So they pull if off the wall."

Discussion

PDCR 2-19-75, dated February 19, 1975, which authorized the installation of the horn bypass keys, stated as a reason for the change that area and process radiation monitor horns presented themselves as a nuisance during calibration and prolonged alarm conditions. It further stated that plant operational experience has seen units physically removed or tampered with as a means of eliminating the nuisance.

This allegation was previously investigated and documented in Regional Inspection Report (IR) 50-336/88-24 as unsubstantiated. In IR 50-366/88-24, two instances of disconnected horns (other than units that had been retired in place) were noted. These were RM-7892, "Solid Waste Drumming and Decontamination Room" area monitor (the allegation) and RM-9813, "Resin Drum Filling Operations" area monitor. The inspection report stated that RM-9813 had an outstanding trouble report to correct a low off scale indication. The inspection report assumed that the horn problem was addressed by the trouble report; however, it did not address the fact that the horn was found disconnected on RM-7892 (the original allegation).

When radioactive material in the vicinity of RM-9813 was removed, the general area radiation levels dropped below a predetermined low setpoint causing the unit to alarm. The control room has two annunciators (panel alarms), one for process monitors and one for area radiation monitors. Once an alarm (high or low) for one monitor comes in and is acknowledged, the control room is incapable of detecting further alarms of that type from related monitors. If the alarm cannot be reset in a reasonable period of time, standard practice is to place the module for that specific radiation monitor into an "alarm defeat" position; thereby, allowing the control room to clear the alarm and properly monitor the

remaining detectors. In placing a module in the alarm defeat mode, the horn located in the area of the monitor, is automatically activated as a precautionary measure. In the case of RM-9813, the horn bypass keys, located in the control room, would have been used to silence the horn until such time that a new low setpoint could be determined, appropriately set, the module reset and placed back into operation.

When alarms are received in the control room, OPS Form 2387E, "CRAB Annunciator Form", Rev. 4, provides the operator a concise chart referencing the appropriate operating procedures and sections for responding to the alarm. For area and process radiation monitors, it directs the operators to operating procedures OP2383B and OP2383A, respectively. Procedure OP2383B, "Area Radiation Monitoring Operation", Rev. 3, dated April 12, 1984, is inconsistent in that it requires bypassing the horn on a high radiation alarm, but not for an instrument failure (low) alarm. Procedure OP2383A, "Process Radiation Monitors Operation", Rev. 6, dated March 27, 1986, also does not require horn bypassing on an instrument fail alarm and further directs the reader to other monitor specific procedures when addressing a high radiation alarm. Of the 13 monitors listed, the inspector noted that the listed references for 6 monitors did not exist. This was due to failure to update these references when the associated procedures underwent extensive format changes. The inspector noted further inconsistencies in that, of the remaining references, two addressed the bypass keys whereas four did not.

During a review of completed surveillances, the inspector noted that on January 10, 1989, technicians performing procedure SP2404AQ noted that the local horn was missing. However, the technicians did not initiate a trouble report or use any other method to cause the problem to be addressed other than a note on the surveillance document. Subsequent to the surveillance, operations personnel rediscovered the missing horn, initiated the proper documentation and the horn was eventually replaced.

The inspector examined 26 process and area monitors for indications of horn tampering. None were observed although a few had horns that were loose but not to the point where it was felt that horn operation was compromised.

Conclusion

This allegation is substantiated. The licensee previously acknowledged a problem with horn tampering as a justification for installing the horn bypass keys. IR 50-336/88-24 documented two instances of such tampering and an additional example was documented by the licensee in a surveillance report. Procedural guidance to operations personnel for use of the bypass keys is spotty and inconsistent which may lead to an activated horn not being bypassed in a timely fashion and prompting a worker to use an alternate method to silence a nuisance horn. However, the problem with horn tampering appears to be a few isolated instances and does not seem to be pervasive. The inadequate procedural guidance to operations personnel regarding the use of the bypass keys is an unresolved item pending licensee corrective action and NRC review (50-336/89-13-13).

A.6.18.1 and A.8.4 Stack Gaseous High Range Radiation Monitor

Allegation

Due to operations personnel noticing an increased reading in the Unit 2 Stack Gaseous High Range Radiation Monitor, RM-8168, a work order was initiated which prompted I&C personnel to perform a functional test of the unit in accordance with surveillance procedure SP2404AR. The alleger stated that the normal reading for the monitor was in the 1E-3 uCi/cc range. Upon investigation, he noticed the current indication was around 1E-2 uCi/cc and had been that way for approximately one month. He requested that chemistry obtain a grab sample for comparison purposes - the sample analysis results were approximately 1E-6 uCi/cc. The alleger is very disturbed that operations personnel took daily readings which were written in a turnover log, with the unit indicating 1E-2 or high E-3 uCi/cc, and did not become concerned.

Discussion

The Kaman Instrumentation Corporation, High Range Gaseous Effluent Monitor (KMG-HRH) has an operating range of 1E-2 uCi/cc to 1E+5 uCi/cc, as documented in Vol. 1, Number 1, of it's Technical Newsletter, dated September/October 1983. It was originally designed to be used in conjunction with a normal range monitor and would automatically start operation at 3E-2 uCi/cc upon receipt of a hand-shaking signal from the normal range monitor. At Millstone Unit 2, the unit was installed "stand-alone" and is continuously operating irrespective of a normal range monitor installed elsewhere. To achieve this dynamic range, the unit analyzes only an extremely small sample. The digital display in the control room on July 20, 1989, indicated approximately 2E-3 uCi/cc - well below its intended operating range. Since this unit is designed to provide information to control room personnel during accident situations when the normal monitor would be ineffective, it is not intended to provide accurate readings under normal operating conditions. The normal high alarm setpoint for this monitor is 2E-1 uCi/cc. The cause of the elevated reading was determined to be a defective Geiger Mueller tube (the detector) and was replaced January 27, 1989.

Conclusion

This allegation is unsubstantiated. The readings on radiation monitor RM-8168 for which the alleger was concerned were below it's typical operating range. In this range, indications are much less accurate and small changes in comparison to its dynamic range are of less of a concern to operating personnel - especially with no abnormal readings from the normal range monitor, as was the case. It was reasonable under the circumstances to expect that the monthly functional check was adequate to detect problems with the unit. The unit contains multiple detectors (a total of 5 channels) and would still have functioned adequately during an accident situation.

A.6.18.2 Missing Data Block in Procedure

Allegation

When using the Test Computer Method to perform the licensee monthly surveillance procedure SP2401J, "Thermal Margin/Low Pressure Calculator Test," one of the procedure steps requires the operator to verify the revision number of the computer procedure in use and record it on the data sheet. There wasn't a block on the data sheet to record this information, yet the procedure had been performed five or six months in a row prior to the alleger dicovering the discrepancy without any of the previous operators making note of the missing data block. What this meant to the alleger was that operators were not reading the procedure when doing this test and providing another example that procedural noncompliance is a problem at Unit 2.

Discussion

Revision 0 of I&C Form 2401J-2, one of the data sheets for SP2401J, was approved on August 31,1988, and did not have the data block required by SP2401J, step 7.2.5, for recording the computer procedure revision number. Change Number 1 to this Revision of SP2401J was initiated by the alleger and approved on December 30, 1988, and added the missing data block. The inspector reviewed all SP2401J-2 forms submitted between August and December,1988, when Change No. 1 was initiated, and the computer procedure revision number had not been manually entered on any of them. When using the computer version of SP2401J, however, the computer generates pages 4 through 15 of the SP2401J-2 data sheet and automatically prints the procedure revision number at the top of each page. The inspector verified that the proper computer procedure was used in each instance for the time period in question by comparing the revision number printed on the data sheets with the revision number of the latest approved procedure available at the time the surveillance was done.

Conclusion

The allegation that the data block for recording procedure numbers was missing from the SP2401J-2 data sheets was substantiated. It is recognized that historical verification of the proper computer procedure being used can not prove that the operator verified the revision number at the time the procedure was performed. It also could not be proven that the operators were not reading the procedure and that part of the allegation is indeterminate.

A.6.18.3, A.6.23 and A.7.3 Power Ascension Test T-88-2

Allegation

During the performance of licensee procedure T88-2,"Power Ascension Test-Cycle 9" following the 1988 outage, the alleger was required by licensee supervision to:

1) Place two RPS Channels out of service at the same time, a violation of the Unit 2 technical specifications, and

2) violate the prerequisites of procedure SP2401E,"Calibration of Excore Nuclear Instruments (NIs) to Incores," and perform the procedure "off the record." The licensee subsequently attempted to cover up the SP2401E procedure violation by not placing the involved data sheets in the nuclear records file.

Discussion

The alleger was initially called to the Unit 2 control room in response to a trouble report submitted when the Operations Department could not satisfactorily perform procedure SP2601D,"Power Range Safety Channel and Delta T Power Channel Calibration." The problem encountered was that the operators could not sufficiently adjust the cold leg temperature (Tc) calibration potentiometer on RPS Channel D. When the alleger began a calibration check of the Tc input into Channel D, the problem cleared, and the Channel D Tc behaved normally. The alleger suspected an intermittent problem existed in the Tc loop and recommended replacing an interface module in the Channel D circuitry.

Before replacing the module, however, the alleger was directed by the shift supervisor to perform procedure SP2401E on channel A. The plant was currently at 30% power and this calibration was required by Procedure T88-2. The alleger questioned performing SP2401E for two reasons. The first reason was that one of the prerequisites required by the procedure is the establishment of equilibrium xenon conditions, yet the plant had not been at 30% power long enough for equilibrium xenon conditions to be established. The alleger's second concern dealt with temporarily placing the channel "A" NI out of service as required by SP2401E while the perceived problem with channel "D" existed. Unit 2 technical specifications require that a minimum of three out of four Reactor Protection System (RPS) channels be operable, and the alleger felt that bypassing channel "A" for SP2401E while the problem existed with channel "D" would only leave two RPS channels operable. The alleger raised his concern to his supervision but was directed to perform SP2401E none the less. The alleger performed the procedure and marked the data sheet that all prerequisites had not been satisfied.

The alleger later raised these concerns to the NRC Senior Resident Inspector and, to support his position, attempted to obtain copies of the SP2401E data sheets from licensee nuclear records. The alleger stated copies of all data sheets for SP2401E procedures performed in conjunction with T88-2 were available, except for the data sheet that he had marked up. After the NRC Senior Resident became involved, the alleger returned to nuclear records, and this time the marked up data sheet was found. The alleger stated this data sheet was signed by Unit 2 management more than a month later than the other data sheets, and he believed this to be evidence that the licensee had initially attempted to cover up the performance of the procedure and signed and back-dated the data sheet only after the NRC became involved.

The inspector discussed the problem that had been encountered with channel D Tc with a licensee I&C Department engineer and technician during this inspection. Millstone Unit 2 has two steam generators. Each of the four Tc Channels (A,B,C and D) senses a cold leg temperature from the coolant flow returning to the core from each of the two steam generators; i.e., each Tc channel receives two

inputs. Each channel circuitry selects the highest steam generator Tc value to send to the RPS. To be conservative, procedure SP2601D requires calibration of all four Tc channels to read the same as the hottest Tc channel. At low power, the steam generators some times operate at different temperatures. At the time T88-2 was being performed, channel D Tc had input from only one cold leg return line, which happened to be the return line from the colder steam generator. The Operations Department encountered a problem with SP2601D because the range of the Channel D potentiometer did not allow the colder Channel D Tc input to be calibrated to the temperature of the other three channels from the warmer steam generator. The licensee I&C personnel stated that the perceived problem cleared when the steam generator temperatures equalized enough for all Tc input temperatures to be calibrated, and that even before temperatures equalized, channel D Tc was still supplying an input to the RPS; the input just could not be made as conservative as the other three Tc inputs. The only time channel D was inoperable was when SP2601D was being performed and when the interface module replacement recommended by the alleger was accomplished. The replacement of the module was completed the next day, and a calibration check per SP2418B,"RPS Temperature Inputs," was successfully performed following the replacement.

Concerning the subsequent performance of SP2401E, the inspector reviewed the procedure and determined that, at the time referred to by the alleger, equilibrium xenon conditions were required as a prerequisite. During the power ascension testing that was being performed at the time, however, the incore to excore calibrations of SP2401E are performed under the guidance of a governing document, T88-2. T88-2 requires core performance checks to be conducted at 30%, 50%, 80% and 96% power levels, and these checks call for SP2401E to be performed at each power level. The 30% check is a preliminary check to ensure a general agreement exists between the incore and the excore instruments. The testing done at this power level is not as extensive or exact as that done at the higher power levels, and T88-2 does not require equilibrium xenon for the checks at 30% power. The alleger performed the incore to excore calibration at 30% power and noted on the data sheet that equilibrium xenon had not been established at the time the procedure was performed. To prevent further confusion, the licensee has since changed the prerequisite step in SP2401E to state that the procedure may be performed at non-equilibrium xenon conditions with the approval of the reactor engineer.

During the performance of the calibration, a problem with the channel "A" NI drawer was detected. Since channel A was not calibrated at the time the fault was discovered, the channel was declared inoperable, and repairs were made. While the repair was being accomplished, the power ascension testing continued. When channel "A" was repaired, the plant was at 50% power, and a SP2401E calibration was done at non-equilibrium conditions to make sure channel A roughly concurred with the other channels and was operable. Once equilibrium xenon was attained, a second 50% power SP2401E was completed to comply with T88-2. The inspector reviewed the shift supervisor's log that had been kept during this time period and determined that at no time were RPS channels A and D inoperable at the same time. The inspector also verified that the set of keys kept by the shift supervisor to bypass RPS channels could not place channel A and channel D out of service at the same time.

The inspector also reviewed all SP2401E data sheets recorded in the performance of T88-2 and had no questions addressing the adequacy of the incore to excore calibrations conducted during the power ascension program. As part of the review of the SP2401E data sheets, the inspector checked the dates on which the I&C Department Head approved the completed procedure. SP2401E had been performed five times during the power ascension testing of T88-2. The 30% power calibration done by the alleger was signed on March 31,1988. Two of the other data sheets had been signed on February 27, however the remaining two data sheets were signed on March 31 and April 6,1988.

Conclusion

The problem encountered with channel D Tc was a familiar one to licensee I&C personnel interviewed by the inspector. The variation in Tc caused by low steaming rates had been experienced previously, and once steam generator temperatures equalized, the problem did not recur. The inspector concluded that, except for the time it was calibrated and for its interface module being replaced, channel D Tc input to the RPS was operable. Since the inspector verified that channel A and channel D were not intentionally placed out of service at the same time, the allegation that two RPS channels were inoperable at the same time could not be substantiated.

The SP2401E incore to excore calibration performed by the alleger was done under the guidance of power ascension test T88-2. T88-2 allowed for the 30% power calibration to be performed with non-equilibrium xenon conditions present, and inspector review showed the remainder of the calibrations to have also been performed satisfactorily. The allegation that procedure SP2401E was violated is substantiated but is insignificant due to the fact that T88-2 was the governing procedure and it was not violated.

The allegation that the licensee had signed and approved all SP2401E data sheets a month prior to the data sheet submitted by the alleger was unsubstantiated; two other data sheets were signed as late, or later, than the alleger's data sheet. The inspector could not identify any evidence that the licensee had attempted to supress the record of the alleger's performance of SP2401E.

A.6.19 Loss of Power Due to Improper Use of a Ground Cart (related to C.3.19 and C.3.31)

Allegation

On October 25, 1988, a loss of normal power incident occurred at Millstone 2 due to the fact that a live 4160 Vac bus was inadvertently grounded. This incident caused a reactor trip and destruction of the circuit breakers. The incident was caused by craftsmen failing to follow procedures. In addition, the electrical maintenance personnel used two ground carts instead of one during the incident.

Discussion

On October 25, 1988, two electricians at Millstone 2 were assigned to install workman's grounds on the 4.16 kV breaker for the "C" service water pump motor. This was accomplished by installing a ground and test device "ground cart" in the breaker cubicle, using procedure MP 2720C5 "Ground Metal Clad Switchgear", Revision 1. This temporarily grounded the motor until a workman's ground is attached. The electrician used a ground cart for verifying the absence of voltage on the "Line" side of the breaker, and another one for the grounding. The latter one had been connected from the "Bus" side to the ground. As a result, the "Bus" side of the circuit breaker was inadvertently grounded, causing a loss of normal power, followed by a reactor trip, engineering safety feature actuation, and start of the emergency diesel generators.

The inspector reviewed Revision 1 of MP 2720C5. The procedure does not specify how many ground carts should be used. However, in section 3.2 "Tools and Equipment", a "General Electric ground and test device" is mentioned. After the October 25, 1988 ground cart incident, MP 2720C5 was revised to clearly specify that only one ground cart should be used. The inspectors interviewed 2 electricians who perform the grounding activities. They stated that before the October 25, 1988 ground cart incident, electrical maintenance frequently used 2 ground carts to perform grounding activities. Two ground carts make the job easier and quicker while one ground cart makes the inadvertent grounding less probable. The incident was reported to the NRC in October 1988, and a Licensee Event Report (LER #88-001) was issued on May 4, 1989.

Conclusion

The allegation is substantiated in that the incident did occur. However, the procedure was not explicit relative to the number of ground carts to be used. The detail of the incident had been reported to NRC before the allegation and the safety concerns had been evaluated by the licensee. This allegation is basically a statement of fact. However, the employees used this event to illustrate an overall concern with the failure to follow procedures that ultimately resulted in a plant operating event.

A.6.20 and A.6.27 Functional Testing of Radiation Monitor Horns

Allegation

"If you look at the old revisions of most of the NMC rad monitor testing, you will find that we use to functionally test the horns when we did the calibrations. We don't functionally test a whole lot of horns anymore. We don't even functionally test the horns when we do the monthly functionals. If the horn test was included in the functional monthly test, I believe that we would have a lot less problems with horns being disconnected or found disconnected and it wouldn't be out of service for a long period of time."

Discussion

The inspector reviewed the following procedures to determine if a local horn check was included in the functional test procedures:

- SP2404AE - Unit 2 Stack Gaseous Process Radiation Monitor, RM-8123B Functional Test

- SP2404AG - Waste Gas Process Radiation Monitor (RM-9095) Functional Test

- SP2404AI - Steam Generator Blowdown Liquid Process Radiation Monitor, RM 4262, Functional Test

- SP2404AK - Containment Process Radiation Monitoring Gaseous and Particulate Instrument RM-8123A/B and RM-8262A/B Functional Test

- SP2404AN - Spent Fuel Pool Area Radiation Monitor Functional Test

None of the above functional test surveillances included a check of the operability of the local horn. If fact, most recommended that the horn be bypassed during the performance of the surveillance test.

Of particular concern was the lack of a local horn test for the Spent Fuel Pool monitors. Technical Specification (TS) 3/4.3.3, "Monitoring Instrumentation", requires, in Table 4.3-3, that a monthly channel functional test be performed for the "Spent Fuel Storage Criticality Monitor and Ventilation System Isolation."

The Channel Functional Test is defined as the injection of a simulated signal into the channel as close to the primary sensor as practicable to verify operability including alarm and/or trip functions. TS Bases 3/4.3.3.1, "Radiation Monitoring Instrumentation" states that the spent fuel storage area monitors are provided to serve two functions. First, the monitors are required by 10 CFR 70 to detect accidental criticality and to provide an alarm warning to personnel. Surveillance procedure SP2404AN, "Spent Fuel Pool Area Radiation Monitor Functional Test", Rev. 0, dated February 6, 1986, does not include steps to verify the operability of the local area horn. In addition, 10 CFR 70.24, "Criticality accident requirements", states in paragraph (a) that the monitoring system will energize clearly audible alarm signals if accidental criticality occurs. To perform its required function to detect an accidental criticality, the monitor must be able to warn individuals working in the general area (via the local horn) of the immediate radiation hazard. Failure to functionally test the spent fuel pool monitor horns is a violation of Technical Specification 3/4.3.3 (50-336/89-13-07).

Conclusion

This allegation is substantiated. Many of the functional tests do not include testing of the local horn, and in fact, recommend bypassing the horn during performance of the test although the horns are tested during the less frequently

performed calibrations. However, failure to test the operability of the Spent Fuel Pool Criticality Monitor channel to include alarms is an apparent violation of Technical Specification 3/4.3.3.

A.6.21, A.13.1 Control Of Overtime

Allegation

- "What is important to point out in here is that the licensee reviewed and submitted the list of overtime people... I think that the NRC should have audited that and come up with some hours... because we're not complying with the 1.09 amendment."

- "...It shows people working more than seven days in a row and not being given the following weekend off as was committed in this report..."

- "If you look at 1.09, it would appear when you read it that before this guy works this overtime, he is going to get an authorization by a superintendent. And I submit to you that that's not true."

- "And, so, in general that the overtime is being abused."

A.13.2

- "He could work 14 days straight, but he (would) never be documented on our time in our office, because he is being charged off on unit one hours..."

C.3.21

- "...I think that in light of the previous testimony about the commitment of Unit 2 to control overtime and the commitment by Mr. Keenan, the Unit superintendent to allow the taking of two days off after a seven day work period since that time has not been followed...Mr. Scace has denied publicly in print that such a commitment was ever made to the NRC...

C.4.1

- "The commitment to the NRC is that if I work seven days, I get the following weekend off. That is not the case."

C.4.2

- "...the 72 hour per week requirement of NEO 109, ACP 1.19 and generic letter 82-12 is routinely violated as was the case in my work schedule for the period of February 5th through February the 11th, 1989 having worked 75 hours."

Discussion

The NRC issued Generic Letter 82-12, titled,"Nuclear Power Plant Staff Working Hours," which provided detailed guidelines for controlling work hours for personnel engaged in critical safety related work. The requirement to comply

with these controls was incorporated into the Unit 2 Technical Specifications, paragraph 6.2.2.g. as imposed by Amendment 106 to the license. The Technical Specification states, in part, " These procedures should follow the general guidance of the NRC Policy Statement on working hours (Generic Letter No. 82-12)."

The licensee's implementing procedure for overtime control is the Nuclear Engineering and Operations Procedure, NEO 1.09, Overtime Controls for Personnel Working at the Operating Nuclear Stations. This procedure limits an individuals overtime to (1) no more than 16 continuous hours; (2) no more than 16 hours in a 24 hour period; (3) a break of at least 8 hours between work periods; (4) no more than 24 hours in a 48 hour period; and (5) no more than 72 hours in a week. The procedure explicitly requires first line supervisor approval before these limitations are exceeded. It does not explicitly require the station or plant superintendent to approve exceeding the limitations of the procedure before the fact. However, the Generic Letter does require prior approval of the overtime by the plant manager or his deputy if it exceeds the above stated guidelines.

The NRC performed an inspection of overtime controls at Unit No. 2 during the month of December 1987, Inspection Report 50-336/87-33. In that inspection, the agency found that overtime controls were being violated and a citation was issued. Subsequent to the violation, one of the employees provided the resident inspectors with an allegation concerning excessive hours worked in the July 1987 time frame. As indicated in the December 1987 inspection report, the overtime violations were already identified, this one being an additional example. A letter was sent to the licensee, dated January 29, 1988, informing them of the concern and requesting appropriate action.

During this inspection, the NRC inspector performed a detailed review of the February through May, 1989, overtime control records for the instrumentation and control and maintenance departments. He also randomly checked the overtime control records for the operations department for the same period. This time period encompassed a plant outage where overtime usage would be expected to be the greatest. The following observations were made:

1. An instrumentation and control (I&C) first line supervisor exceeded the limitations on multiple occasions for working greater than 24 hours in a 48 hour period; less than 8 hours break between work periods; greater than 72 hours in a week and did not receive prior supervisory or management approval before working these hours.

2. The overtime control documentation does not address working greater than 24 hours in overlapping 48 hour periods. For example, if an individual worked Monday and Tuesday and an overtime authorization form were completed for this period, then the individual worked the following Wednesday and Thursday and another overtime authorization form would be issued for that period but no overtime authorization form would be issued for the Tuesday/ Wednesday time period. This does not satisfy the intent of the Generic Letter that management consider the likelihood of significant reductions in personnel effectiveness have not occurred.

3. Individuals routinely work more than seven days without a day off.

4. Notwithstanding the foregoing, the above standards are not excessively abused as evidenced by the extensive records, majority of situations covered by authorization forms signed by the first line supervisor, and those cases that did exceed the Generic Letter guidelines were only for a few hours by a limited number of individuals.

With regard to the commitment by Northeast Utilities to provide employees working seven consecutive days with the following weekend off, the NRC Inspection Report No. 50-336/87-29 stated, " ... for the upcoming refueling outage direction would be issued to direct that work schedules would include at least 1 day off per week, and if 7 days are worked, then the following weekend would be scheduled as off for the individual." This verbal commitment was for the late 1987, early 1988 time frame. Discussions with the Unit 2 and station superintendents disclosed that they considered this to be general policy and, in fact, where it can be accommodated, still is the general policy, but not a formal NRC commitment.

The NRC generally only recognizes commitments which are formally presented by the licensee in correspondence directed to the agency. Further, it is apparent by the statement in the report that this commitment was not meant to be in perpetuity. In the foregoing review of the overtime control records, it was noted that some individuals do work more than seven days without a day off. It was the inspectors opinion that this was not excessive and, in most cases, individuals were given time off during the outage.

The inspector verified that the inter-plant maintenance force (IMF) overtime is controlled by selecting maintenance personnel records identified during the Unit 2 maintenance force overtime audit and cross checking the Unit 1 records. Unit 1 separately tracks overtime for individuals transferred from Unit 2. No overtime violations were noted.

It should be noted that the licensee does periodic reviews of the overtime control at the station superintendent level. These reviews are performed by the department managers and require them to assess their compliance with the procedure on overtime control. These assessments are conducted at six month intervals.

CONCLUSIONS

The allegation that "we are not following (NEO) 1.09," is, in part, substantiated. The parts that are not being followed include the failure to consider overlapping 48 hour periods in determining the 24 hour limitation and failure to obtain prior approval from upper station management before performing overtime beyond the Generic Letter guidelines and procedure limitations.

With regard to the licensee not providing one day off after the employee has worked seven consecutive days, this is substantiated. However, there was never a formal commitment by the utility to the NRC to provide this to the employees. Further, the verbal statement was only to provide the day off during the 1987-1988 outage.

The allegation dealing with the inter-plant maintenance force's overtime not being tracked is unsubstantiated. The audit of records clearly shows that IMF overtime is being tracked and accounted.

The general statement that overtime is being abused could not be substantiated. There was no evidence to indicate that supervisors were not trying to implement the intent of the station procedure. Overtime beyond the procedure limitations was being utilized, but records were being generated and controls exercised that, with the exceptions noted, meet the intent of the requirements. The violations identified appeared to be isolated cases of misinterpretations of the requirements, not blatant disregard.

In respect to the allegation that the alleger worked 75 hours in one week, the audit of the maintenance department records for that period disclosed several instances where individuals worked greater than 72 hours in one week. In all cases, it could be shown that authorization forms had been initiated by the first line supervisors.

The failure to control overtime in strict accordance with the Technical Specification and Generic Letter 82-12 is an apparent violation (336/89-13-08). To wit: (1) the failure of supervisors to consider ovelapping 48 hour periods of work wherein the individual exceeds the 24 hour limitation for that period; (2) the failure of the unit manager to approve exceeding the limitations of NEO 1.09 before the fact.

A.6.22 Acoustic Valve Monitoring System (AVMS) (related to A.6.8 and A.12.5)

1. The alleger stated that noise spectra obtained from the AVMS with and without an input were almost the same. Therefore, he suspected that the AVMS may not be working, and that functional test procedure SP 2410A may be inadequate.

2. The I&C technician performing calibration of the AVMS was not adequately trained.

Discussion

While performing the surveillance test on the AVMS during the 1989 outage, the I&C technician obtained a set of noise spectra recordings from one AVMS channel that looked unusual, because the peaks looked different at certain frequencies. He asked the AVMS engineer for an interpretation. The AVMS engineer did not examine the spectra carefully enough to detect the difference in amplitude (printed in powers of 10 above the spectrum plot) and stated that it appeared to be correct. Later, the technician investigated further and found that the accelerometer was not connected to the charge amplifier for that particular channel. Following that incident, engineering performed a careful study of various spectra at differing conditions. The conclusion was that the spectrum obtained without input was due to cross-talk of the cables connecting the charge amplifier and the signal conditioner. They found that the amplitude root mean square (RMS) of the 0 to 100 Hz spectrum without input is about one order of magnitude lower than the normal ones (3.16×10^{-4} vs. 4.18×10^{-3}). Engineer-

ing determined that the cross-talk was below the overall "noise floor" for the spectrum analyzer being used. The I&C department was told not to take measurements near or below the "noise floor" level. The licensee concluded this will eliminate the interpretation problem.

The above condition applies to the test only. In the condition that the PORV develops a leak or is open, the noise amplitude will be well above the normal level.

The lack of training for the I&C technician was discussed in allegation A.6.8, item 2.

Conclusion

The inspector concluded that item 1 of this allegation is unsubstantiated. Although the noise spectrum was initially misinterpreted by the AVMS engineer, there are substantial differences (both the RMS value of the noise level and the amplitude at the reference point) between that spectrum and the "normal spectrum". The licensee had developed a means to differentiate them.

Item 2 of this allegation is the same as allegation A.6.8, item 2.

A.6.24 Reactor Coolant Pump Instrumentation

Allegation

On December 30, 1988 it was alleged that the licensee did not show adequate concern for the reactor coolant pumps (RCP) and the allegers provided a series of examples of licensee action or inaction to support this conclusion. This allegation has multiple subparts which are discussed below.

Background

The RCP are important to safety because they are a part of the reactor coolant system boundary and they are assumed to perform in a certain way in the accident analysis. Although they are not powered from an onsite source and are not subject to the quality assurance (QA) requirements of 10CFR 50, Appendix B; common mode failures that could result in more than one locked rotor at a time or flow coast down more rapid than a four pump trip is an unreviewed safety problem. Therefore, it is necessary that the condition of these pumps be closely monitored.

A.6.24.1 Setpoint Changes

Allegation

It was alleged that the control room operators made unauthorized changes to the set points for low oil sump level alarms.

Discussion

A review of Instrumentation and Control (I&C) maintenance records indicates several instances where an alarm set point was found to have changed by a factor of six times the instrument repeatability in the non-conservative direction. No problems with the alarm module or other components in the system were detected. The lowering of set points by the operators is contrary to operator training ("knowledge of the art") but is not specifically prohibited by any plant procedures. However, "tweaking" instead of following alarm response procedures requiring the monitoring of levels and temperatures is a violation of those procedures.

Conclusion

The circumstances strongly suggest that the operators have, on at least three occasions, lowered the alarm set points. However, sufficient data to prove this allegation as far as it being a common occurrence were not obtained. Thus, the staff's finding must remain inconclusive. However, we strongly suggest a new procedure that requires such set point changes be logged, treated as an alarm condition, and reported on a maintenance request be established. This action will have the benefits of clearing nuisance alarms, providing increased surveillance of parameters ensuring that plant equipment is maintained within the assumptions of the safety analysis in the Final Safety Analysis Report (FSAR), Chapter 15, and providing closer monitoring of instruments that appear to have transient problems.

A.6.24.2 Alarm Setpoints

Allegation

It was stated that calibration stickers sealing alarm set points could be removed, the setting changed and the sticker replaced.

Discussion

The staff's review of this issue determined that the self-adhesive stickers can be removed However, they were not provided to seal the knobs but were merely provided to indicate when it had been calibrated, when it was due to be calibrated and who did the calibration. The inspector observed similar stickers being removed from gauges without being damaged.

Conclusion

The allegation is substantiated. However, calibration stickers are not provided to seal set points. We recommend that gummed stickers be used on these dials to support the procedural guidance recommended in A.6.24.1 above.

A.6.24.3 Reactor Coolant Pump Bearing Temperature

Allegation

It was alleged that the temperature of the "A" RCP motor upper guide bearing is running 40° F hotter than all other bearings on this and the other three pumps.

Discussion

The staff's review of the manufacturer's literature indicates that temperatures below 194° F are not considered hazardous and that the absolute temperature of a bearing is not as important as temperature trends in detecting incipient failures. As a result, we reviewed an engineering evaluation of the upper guide bearing temperatures (GEE-89-104). This document concludes that the average running temperature for this bearing has been 174° F with a peak of 175° F for the last two years. The report data also show that this bearing runs 29° F hotter than the coldest of the other three RCP upper guide bearings.

Conclusion

The plant operating data show this allegation to be substantiated in that the bearing does run hotter. However, this condition is within the design of the bearing and does not represent a safety concern.

A.6.24.4 and A.6.12.2 Reactor Coolant Pump (RCP) Wiring Deficiencies

Allegation

The alleger stated that the wiring for the "C" reactor coolant pump oil level transmitters were incorrectly wired as received from the vendor. The alleger believed that the wiring should have been changed on the "D" pump before it was delivered.

He also alleged that the resistance temperature detectors were miswired when the pump was delivered and that a technician rewired them without the proper documentation. This, he believed, was another example of failure to follow procedures.

Discussion

The company maintains that schedule constraints related to the outage made it inadvisable to modify the contract for the reactor coolant pump "D" motor, and the motor was delivered only two weeks prior to the scheduled rigging. Any slippage in the schedule would have resulted in unacceptable delays in the installation process. The two week margin precluded unpacking and modifying the 45 ton motor before it was mated to the pump. Once it was inside the containment, there are few places accessible to the massive load that is capable of supporting it. Therefore, the decision was made to wait until the motor was mounted to the pump to correct the deficiencies.

The issue that the "C" reactor coolant pump was rewired without proper use of a procedure was not specifically addressed during this inspection; however, numerous examples of the licensee's failure to follow procedures were identified during this inspection and this issue is discussed generally in Section A.6.4.

Conclusion

The assertion that the pumps were incorrectly wired is substantiated. The decision to modify the motor instrumentation after installation was a prudent decision given the limiting conditions.

A.6.25 Hydrogen Analyzer Problems

Allegation

On December 30, 1988 it was alleged that the calibration procedure for the primary containment hydrogen analyzer was inadequate and the licensee was not responsive in addressing employee concerns about this system.

Background

Information on the hydrogen analyzer system was obtained from a vendor notebook maintained by the Unit 2 Instrumentation and Control Department (I&C); plant drawing 25203-26025, Sheet 3 of 3; Calibration Procedure 2403C; Operating Procedure OP2313C; a visual inspection of the analyzer cabinet and Emergency Operating Procedure EOP2532.

A.6.25.1

Allegation

"Calibration and testing is accomplished by a procedure at a specific flow rate while the system is at 10 psig. What happens to the calibration when containment is.....something less than 10 pounds....Suppose you have an accident and it's at...40 pounds?"

Discussion

A review of the documentation for this system shows that the sample line pressures inside of the cabinet are limited to 10 psig by pressure regulators. The pressure at the Hydrogen Monitoring Cell is limited to 80 inches of water by a second pressure regulator. The key physical parameter is flow through the cell, which should be 100 cubic centimeters/min. The system is manually initiated and manually controlled. Excess flow is bypassed around the cell. Finally, EOP2532 states that the containment pressure should be less than 10 psig before the hydrogen analyzer is placed into service.

Conclusion

The current calibration procedures reflect the pressure and flow that the system is most likely to experience during an event for which hydrogen monitoring is advisable. Therefore, we conclude that the current procedures are acceptable and the allegation is unsubstantiated.

A.6.25.2

Allegation

It was alleged that the documentation for the hydrogen analyzer system is inadequate. It was also alleged that there are several functions of this system that are not used. "It's just leading to confusion to a guy coming in the middle of the night trying to fix it. We think it should be deleted and we should take out those circuit boards that don't apply and modify the prints accordingly so we've got something useful. It's a very confusing thing to work on."

Discussion

This system is a manually initiated and operated system that will be placed into operation at approximately 12 hours after an accident. The system is redundant and has a grab sample capability. This system is not subject to 10CFR 50, Appendix B, quality assurance (QA) controls.

The documentation used in the inspector's evaluation was in fact difficult to use and required two "hands on" examinations. The first was required to correlate vendor drawing and procedure instrument numbers with the plant drawing instrument numbers. The second was required to determine which of two parts in the warehouse was the hydrogen sensor. Furthermore, no documentation of the installation, theory of operation, maintenance and repair of the Hydrogen Monitoring Cell could be found on site.

Conclusion

This equipment is important to safety and the available documentation should be improved by using a consistent system of instrument numbers and providing information on the Hydrogen Monitoring Cell. Accordingly, although not a violation, the allegation with regard to the poor quality of the documentation is substantiated.

Because of the poor quality of the available documentation, removal of components from this system does not appear to be appropriate. Further, if the supporting documents are improved, removal of the unused components becomes unnecessary. Therefore, the allegation that circuits should be removed can not be supported.

A.6.25.3

Allegation

"The 1 percent gas bottle was not secured with the same permanent brackets as the 0 and 4 percent bottles and all the lines with temporary poly flow. So, we're (expletive) leaking hydrogen all around the area where we are storing these bottles and poly flow tubing in kind of a temporary hook-up."

Discussion

All of the gas bottles are currently secured to a building frame with brackets. Flexible metallic hose is used to connect the bottles to steel instrument tubing. The problems noted by the alleger existed at one time and were corrected by the licensee.

Conclusion

The allegation was substantiated, however suitable repairs have been made.

A.6.25.4

Allegation

"The 4 percent gas regulator for the B unit leaks internally and pressurizes the header."

Discussion

The problem noted by the alleger existed at one time and was corrected by the licensee.

Conclusion

The allegation is substantiated and repairs have been made.

A.6.25.5

Allegation

This issue dealt with the licensee's storage and retrieval of spare parts for the hydrogen analyzer. Two concerns were expressed. The first was that parts were difficult to find. The second concern was that the spare sensors for this system were being used at a high rate, replacement elements were not obtainable and the one in the warehouse was red tagged.

The example given for hard to find parts was a solenoid operated valve.

Discussion

The replacement of solenoid operated valves in this system is not the responsibility of the Instrument and Control (I&C) Department, from which this allegation was received. It is the Maintenance Department which has this responsibility and they had no difficulty locating the specific valve (Skinner X5H32115). However, the stock number used by the Maintenance Department (58900089) is different from that listed in the warehouse for the hydrogen analyzer system (Bendix parts) using 58900184. The inspector verified that duplicate parts are being stored in different sections of the warehouse. Discussions with the licensee indicated that neither part number is subject to a shelf life limit and that the licensee has a program in place for the identification and consolidation of duplicate parts.

No record of the Hydrogen Monitoring Cell having been red tagged could be located. Red tags, by QA procedures, are not placed on non-QA equipment or parts. The cell was located in the warehouse at location K3-E-5 and the purchase document (F39953) states that this was a non-QA purchase. No red tagged cells for this system were found in the holding area. However, a discussion with an I&C supervisor confirmed that the cell had a red tag on it when he saw it in the warehouse. The last cell to be used was issued on January 3, 1978.

Conclusion

The inspector has concluded that the parts in the warehouse are not difficult to find in a reasonable period of time (this system has a 30 day LCO) and sufficient usable parts are available. Accordingly, the allegation with regard to the difficulty of identifying and retrieving parts is unsubstantiated.

We have also concluded that there have been uncertainties with regard to QA requirements for this system that may have lead to red tagging at one time, but this has been corrected. We have also concluded that parts for this system are not difficult to obtain and replace within the 30 day LCO. Therefore, the allegation with regard to unavailability of parts and high usage is unsubstantiated.

A.6.25.6

Allegation

"The alarm panel. It's not obvious what causes the three alarms at the local panel down in the penetration areas. We were trying to say that we don't have any paperwork or any prints or anything to really show what's going on."

Discussion

A review of OP2313C indicates that the hydrogen analyzers are operated from their local panels and the alarms are not relied upon for operation.

Conclusion

This allegation is a statement of fact and provides only an additional example of where and why the existing documentation should be revised. Because current operating procedures do not rely on these alarms, this situation does not constitute a safety problem.

A.6.26 Steam Jet Air Ejector Radiation Monitor

Allegation

"The radiation monitor for the steam jet air ejector (RM-5099) is not a very useful radiation monitor. I would consider it a very questionable operational capability." The alleger stated that the monitor did not see a previous steam generator tube leak.

Discussion

The steam jet air ejector (SJAE) monitor (RM-5099) samples the non-condensable gases after dilution with steam but prior to release from the Unit 2 stack. The Unit 2 stack in turn has its own effluent monitor. One purpose of the SJAE monitor is to provide a sensitive indication of a steam generator (S/G) tube leak. Since a tube leak would most likely be detected by the SJAE monitor prior to being detected by the S/G blowdown monitor, which monitors the blowdown of the liquid phase of the steam generator, the SJAE monitor has the ability to terminate S/G blowdown liquid releases if it senses an increase in SJAE activity.

The licensee has experienced a problem in the past with inadequate sampling due to SJAE flowrate and the effects of pressure in the pipe due to fan #55 which takes suction on the pipe and discharges to the Unit 2 stack system. In January, 1987, the licensee experienced a S/G tube leak. The inspector reviewed activities of the SJAE during this period as determined by chemistry analysis, and compared this information with detector responses from the S/G blowdown monitor (RM-4262) and the SJAE monitor (RM-5099). As can be seen from Figure A.6.26, on January 26, the chemistry analyses had indicated an increase of a factor of 1600 over normal and the S/G blowdown monitor had registered an increase of a factor of 8. However, the SJAE did not indicate any increase in activity until January 28. Due to this apparent discrepancy in the SJAE monitor and actual chemistry analyses, the licensee increased the monitor's sample flow from 3.5 cubic feet per minute (CFM) to 5.0 CFM. It was after this change in sample flow on January 28, 1987, that the SJAE monitor first detected the S/G tube leak.

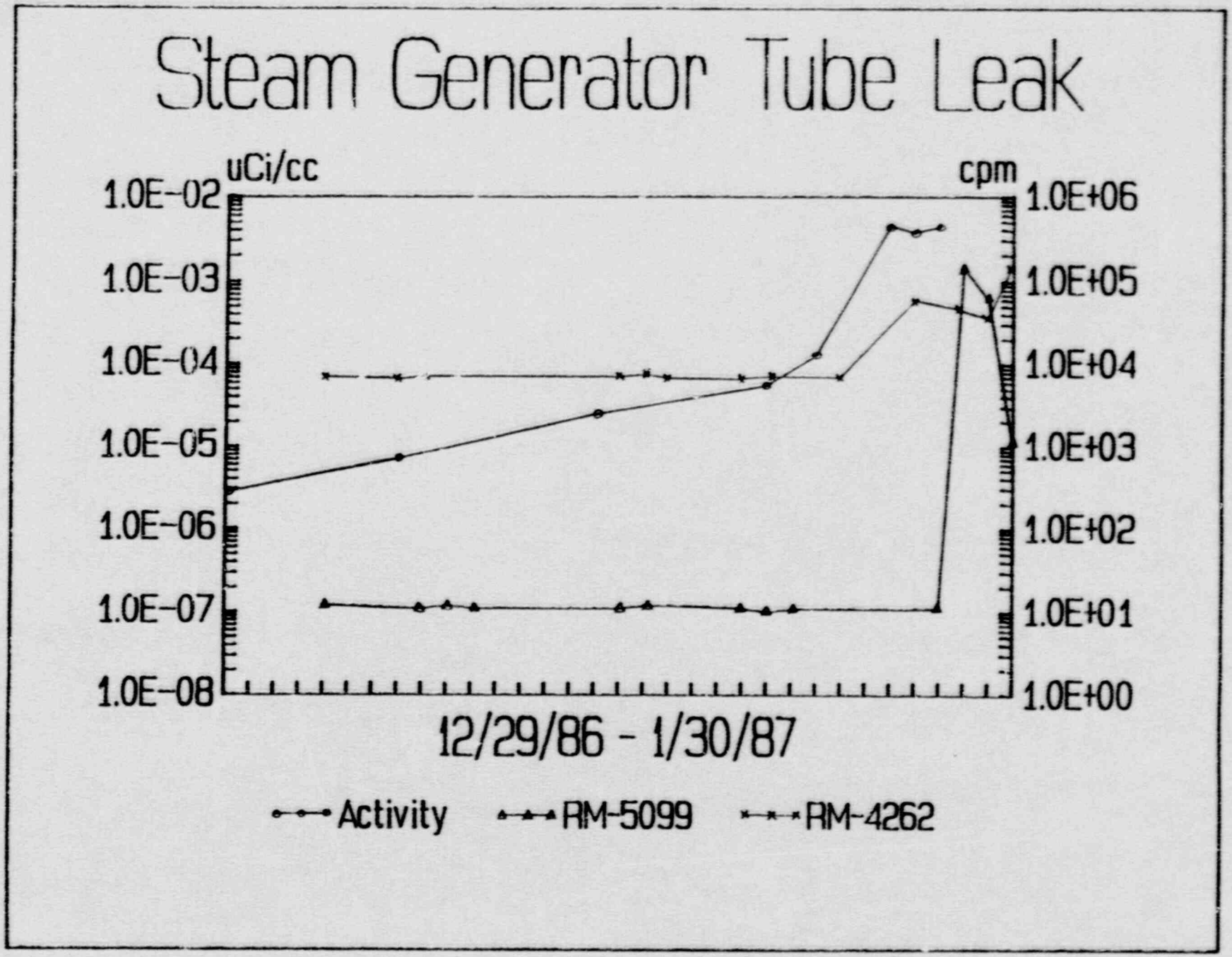
Steam Generator Tube Leak
uCi/cc
cpm
1.0E-02
1.0E-03
1.0E-04
1.0E-05
1.0E-06
1.0E-07
1.0E-08
1.0E+06
1.0E+05
1.0E+04
1.0E+03
1.0E+02
1.0E+01
1.0E+00
12/29/86 - 1/30/87
Activity
RM-5099
RM-4262

FIGURE A.6.26

The licensee has since decreased the sample flow back to 3.5 CFM due to a increase in the SJAE flow. The detector is currently indicating a value that is commensurate with chemistry analyses. However, due to various problems including the monitor's sensitivity to SJAE flow and the high moisture content of the sample due to injected steam, the licensee is actively working towards an upgrade that will eliminate these chronic problems. In addition, to provide an alternate method of early detection of future tube leaks, the licensee has installed Nitrogen-16 monitors on each steam line.

Conclusion

This allegation is substantiated. At the time of the steam generator tube leak in January, 1987, the monitor was not operable until licensee intervention. However, during this period of time, the release of steam generator blowdown was properly monitored by RM-4262 and blowdown would have been terminated upon exceeding the high radiation setpoint. In addition, the increased activity in the SJAE was monitored prior to release by the Unit 2 stack monitor. No unmonitored releases occurred and safety was not compromised. However, this monitor provides early notification of steam generator tube failures and should be made a reliable source of information for the operators.

A.8.1 and A.12.4 Containment Particulate Radiation Monitor Filter Screen

Allegation

The containment particulate radiation monitor (RM-8262A) filter paper holder screen was replaced with a modified frisker screen. There should have been a Nonconformance Report (NCR) to use it in this condition.

Discussion

On January 17, 1989, the alleger reported to the I&C Supervisor via an interoffice memorandum that the particulate filter assembly for the Containment Air Monitor (RM-8262A) was missing its original screen and had been replaced with a modified screen from a hand held detector (frisker). He further stated that since RM-8262A was a QA unit, a NCR was necessary to continue using the monitor in its modified condition. A purchase order was placed with the vendor on January 20, 1989 to obtain the necessary replacement parts. The NRC was notified by the alleger in writing of this matter on February 7, 1989.

NCR 289-010 was generated on February 13, 1989 by I&C to address the problem. The NCR was dispositioned on March 1, 1989, and approved by I&C Supervision on April 10, 1989, allowing the screen to be used-as-is since it was still capable of meeting it's original design function.

The alleger received a reply to his original interoffice memorandum from an I&C Engineer on May 11, 1989, stating that an NCR had been written and that the proper replacements were on order.

Since the filters are routinely changed by health physics technicians, the inspector inquired from the Unit 2 Health Physics Supervisor if this situation was known to the Health Physics (HP) department. He stated that the HP group had generated a Trouble Report to I&C approximately one year earlier. However, the inspector was unable to obtain a copy of the Trouble Report. A work order is currently on-hold pending receipt of the parts from the vendor.

Conclusion

This allegation is substantiated in part; however, a nonconformance report was written to address that deficiency as required. More importantly, current I&C personnel had no knowledge of an outstanding Trouble Report on this issue from the HP Department. Upon rediscovery of the problem by the alleger, a purchase order and NCR were issued although the timeliness of I&C supervisory approval of the NCR (almost 6 weeks) could have been improved. The screen functions to hold the filter in place within the sample flow and a modified screen placed in the filter holder mechanism would not compromise the monitors intended safety function.

A.9, B.6.2 Incore Instrumentation

Allegation

This allegation addressed concerns that the removal of incore instruments (i.e., incore neutron detectors) during the February 1989 outage was poorly controlled and potentially unsafe. Among the concerns was that the procedure was unsafe; there was no pre-job briefing; the procedure was not used; the procedure was changed without an approved procedure change or safety review; there was no licensed senior reactor operator present as required by technical specifications for core alterations; there was inadequate health physics coverage; the previous shift on February 22, 1989 was poorly supervised.

Note: This allegation is related to B.6.2 which covers the same topic; hence B.6.2 is incorporated in this discussion.

Discussion

The above allegation was previously given to the NRC resident inspectors office and was addressed and closed per NRC Inspection Report 50-336/89-05, issued May 4, 1989. All of the above allegations were addressed in that report and it is not the intent of this inspection to readdress each issue. This inspection does perform an independent safety review of the ICI removal operation and the adequacy of the health physics coverage. It should be noted that during the original NRC inspection, ICI removal was in progress. During this inspection, the reactor was operating and the refueling floor was inaccessible.

The inspector discussed the ICI removal job with the personnel directly involved, an I&C supervisor and the I&C engineer. However, the actual evolution could not be witnessed as the plant was operating during this inspection. The inspector also reviewed the following procedures.

-- IC 2419A, ICI Replacement - Installation Procedure, Revisions 0, 8 and 9 Change 1

-- OP 2352, Polar, Pedestal, Cask, and Turbine Building Crane Operation, Revision 4, Change 4

-- IC 2442G, Local Area Radiation Monitors Calibration, Model GA2 TMO, Revision 2

-- OP 2383C, Radiation Monitor Alarm Setpoint Control, Revision 1

-- HP 904/2904/3904D, Calibration of Fixed Monitors, Revision 9

-- No. 1370-CCE-GL60-4, Revision 00, Guidance For Removal and Disposal of the Incore Instrument Assemblies For San Onofre Nuclear Generating Station Unit 2&3

Discussions with various personnel appear to validate the employees complaint that the ICI removal shift from 8 p.m., February 21 to 4 a.m., February 22, 1989, lacked proper supervision and management. These problems continued into the next shift beginning at 4 a.m. The ICI removal job was stopped at 5 a.m. for other safety problems. Ultimately a safety meeting was held at 10 a.m. to straighten out coordination between organizations, improve safety and gain control of the job.

The inspector reviewed the employees main concern that removal of the ICI's using only the polar crane rather than an electric winch as required by the procedure was an unsafe practice and increased potential radiation exposure to personnel. The electric winch had failed on the 8 p.m. - 4 a.m. shift and was removed. A replacement winch, although available at the site, was not used. The ICI removal continued using the polar crane only. Although procedure IC 2419A required the use of an electric hoist, no procedure change was obtained. ACP-QA-3.02, station procedures and former Revision 43, Paragraph 4.8 states in part, "An intent change is one which includes a change in the basic method of the procedure, a change which could endanger personnel...Examples [include]...

A significant addition or deletion of procedure steps which is not consistent with the original "applicability of the procedure". The deletion of the winch and use of the polar crane appears to be clearly an intent change requiring management review and a safety evaluation. Although this issue was left unresolved in NRC inspection 50-336/89-05, further review during this inspection indicates that a change should have been obtained. Failure to obtain an approved change is contrary to Technical Specification 6.8.2 and is considered another example of failure to follow procedures and is discussed in paragraph A.6.4. Unresolved item 336/89-05 remains open because of other issues which require resolution.

Although a change should have been obtained, the operation was safe. The licensee had changed to using an electric winch for ease of doing the job considerations. The inspector reviewed Revision 0 to IC 2419A and noted that a hand chain pull was used to initially move the ICI's and then the polar crane was used to complete the lift of the ICIs. A review of a San Onofre (another Combustion Engineering)

procedure for ICI removal also uses the polar crane for ICI removal (the ICI cables at San Onofre are solid rather than wire). The use of the polar crane, if properly controlled, is a safe and acceptable method of ICI removal.

The employee was also concerned with the potential loss of communications to the polar crane operator as affecting safety of ICI removal. The inspector reviewed crane operating procedure OP 2352 and observed the following statements:

> "6.8, any time the crane operator is unsure of the operation called for by the signalman, or the signal is unclear, the operator should stop all motion until the communication problem is resolved."
>
> "7.1.2, CAUTION: If radio communications are lost, all movement of the polar crane is to be stopped until communications are restored, or it is determined by upper management that the operation in progress can be completed safely by use of hand signals.

The above cautions to the polar crane operator and the use of spotters from the refuel bridge assure safe operation.

The improper use of the procedure IC 2419A could not be confirmed. According to the employee, the procedure was at the job site. Conceding that the 8 p.m. - 4 a.m. was not done properly, there appears to have been better control of job after the 10 a.m. safety meeting with management.

The employee stated that there was improper health physics oversight of the job and that an area radiation monitor was out of service. It was confirmed that the area radiation monitor was out of service. However, health physics personnel were not dependent on this equipment. Available at the job site was a portable Teletector radiation monitor plus alarming personal dosimetry devices for personnel working the ICI job. This was adequate for the job. However, Change 1 to Revision 9 to procedure IC 2419A has added the following prerequisite "3.3.1 area radiation monitors RM-7890 and 7891 are in operation or a portable monitor is provided by the Health Physics Department".

The setting of area alarms is at the discretion of operators as per procedures OP 2383B and 2383C. Area radiation monitors RM 7890, containment personnel access and RM 7891, containment refuel machine are listed in these procedures as being set by operations to suit background conditions as long as MPC limits are not exceeded. Figure 6.5 of procedure HP 904/2904/3904 D lists the alarm setpoints for RM's 7890 and 7891 as 225 mR/hour operating and 100 mR/hour shutdown. However, this procedure is for guidance only and procedures OP 2382 B and C take precedence.

Conclusions

The various allegations concerning the ICI removal job on February 21 and 22 were, in part, substantiated. The chief allegation, from two employees, that the removal of the ICI detectors using only the polar crane was an inherently

unsafe operation is unsubstantiated. There is ample precedent that this operation, reasonably controlled, is safe. The use of an electric winch attached to the polar crane is a better controlled and more convenient operation but that does not mean use of the polar crane alone is unsafe.

The employees' view that a procedure change and safety review should have been obtained is substantiated. The deletion of the electric winch from use is clearly a significant change to the procedure. It also is a significant change from the intent of the procedure. A formal change with PORC review and unit superintendent approval should have been obtained.

That procedure IC 2419A was not used was not substantiated. The procedure was at the job site. Procedure use does not necessarily mean a procedure has to be in hand, being read step by step but it should be followed. Conceding that the 8 p.m. - 4 a.m. shift on February 21-22, 1989 did not function properly, there is no evidence of general misuse of this procedure.

The allegation that the health physics controls were inadequate, was unsubstantiated. Health physics has the latitude of setting their own controls. They do not depend on plant installed area radiation monitors nor do they have control of the alarm setpoints which are set by operations. Procedure HP 2904 which provides radiation monitor setpoint guidance does not apply.

The allegations concerning no pre-job briefing and the absence of a Senior Reactor Operator from shift during ICI removal were addressed in 50-336/89-05 and will not be addressed further in this report.

A.10 Radiation Monitor Low Setpoint Alarm

Allegation

This allegation refers to RM-9116, "Aerated Waste Liquid Discharge Monitor." "This is a PIOP's, NMC rad monitor - it has a micro-processor in its base. The issue is that the alarm set point in terms of the high alarm set point can be changed, and is changed on a normal everyday basis by the plant equipment operator after chemistry analyzes the sample. He (operations) inadvertently changed the low alarm and didn't know that he did it. I don't think that is an unsafe condition. So they gave me an automated work order (AWO) and said that the fail alarm was in all the time. I accessed the computer and it told me exactly the same number for the high and low, so I recognized what I think he did. What I did find in the interim was that there wasn't any place that I could go to find out what the low alarm should be. Since the PIOPs monitor was installed three or four years ago, nobody has ever derived a low set point alarm setting in engineering. We took the numbers that were in our procedure - 1E3. The question is in the safety review, the PDCR safety reviews, and the retests that all were done on that rad monitor, why didn't we never derive a low alarm set point?"

Discussion

The facility has three monitors of this generic type: RM-9116, RM-9049 and RE-245; which were installed approximately three to four years ago. RM-9116 and RM-9049 are both controlled by the same computerized unit. When setpoints are changed through use of a miniature keyboard, both the old and the new setpoints are locally printed out. If an operator mistakenly changed the wrong setpoint (high vs. low), the correct value would be known by looking at the paper tape printout. However, on RE-245, changes are made with a thumbwheel and a toggle switch and no printouts are produced to show the previous values. The inspector did note that values for setpoints which are not routinely changed (those other than the high setpoint) were indicated on the computer unit of RE-245 with label tape. In addition, the inspector learned that when power is lost to these units, previous setpoint information is lost and must be reentered.

In the situation where the operator accidentally changed the low setpoint rather than the high, this had the effect of preventing all releases. Since the high setpoint is calculated to be above the expected release activity, a low setpoint of the same value would also be above the indicated activity and would appear to the computer that the detector had failed, producing an unacceptably low meter indication, preventing all releases. Therefore, this situation presented no safety significance in terms of releases to the environment.

The inspector reviewed I&C documentation for guidance to technicians on setting of the low setpoints. The I&C department maintains copies of the procedures and associated data sheets, folder of technical information specific to each detector referred to as oop folder." The inspector noted that no guidance was provided in either the surveillance procedures or data sheets. However, the loop folders for RM-9116 and RM-9049 contained a memorandum from Electrical Engineering, dated April 12, 1989, recommending a fail alarm setpoint of 1E+3 counts per minute. No loop folder existed for RE-245, although the low setpoint was indicated on the unit itself as mentioned above. In discussions with Electrical Engineering, the inspector noted that no documentation could be provided that indicated guidance for low setpoints had been formally provided prior to the April 12, 1989, memorandum.

Conclusion

This allegation is substantiated. Prior to April 12, 1989, the inspector could find no formal guidance that could have been used by the I&C technicians in resetting specific alarm values in the computerized detectors (PIOP's). The alert and high alarms are routinely changed by the operators for each release and need not be documented except on the actual release forms. The low setpoints, which are not typically changed unless background values decrease (e.g. replacing a contaminated sample canister), would still detect a complete failure of either the detector or high voltage at any value other than zero. Although no safety significance is apparent, improvements should be made in the documentation of all applicable setpoints for the above referenced units.

A.11.1 Steam Generator Radiation Monitor Procedure Deficiencies

Allegation

The steam generator radiation monitor, RM-4262, procedure has deficiencies that prevented the completion of the monthly functional test. During the processing of changes to the procedure to correct this deficiency, it was discovered that the three changes that previously were processed against the procedure had not all been incorporated into the data sheets. Change three was not implemented for the functional test performed on January 17, and again on the March test. A particular concern with this is the administration of changes.

Discussion

The procedure in question is SP2404AI, "Steam Generator Blowdown Liquid Process Radiation Monitor, RM 4262, Functional Test", Rev. 1, dated August 19, 1987. The functional test data is recorded on I&C Form 2404AI-1, Rev. 1. Three changes were implemented for the data sheets as follows:

- Change 1, October 14, 1987: corrected a typographical error
- Change 2, December 30, 1988: corrected a step number
- Change 3, January 11, 1989: added six "acceptance criteria"

This functional test was performed on January 17, 1989, and again on March 27, 1989. All three changes were in effect at the time the functional tests were performed. When changes are made, they are posted in the appropriate procedure's folder. At the time a procedure is scheduled to be performed, it is the responsibility of the technician to verify that all appropriate changes have been correctly entered in both the procedure and data sheets. The inspector noted that the completed data sheets for the two tests had all changes posted but Change 3 which added six acceptance criteria. These acceptance criteria are used to determine whether or not the surveillance was completed satisfactorily. The procedure folders - which are not official, controlled copies - contained the appropriate changes but Change 3 had not been indicated on the actual data sheet. Inspector review of the actual data values indicated that none of the values were out of tolerance and the completed surveillances had been dispositioned correctly.

Conclusion

This allegation is substantiated. When the data sheets were modified, Change 3 was not properly implemented on the official copy of the data sheet. On two subsequent uses of the data sheets, the technicians copied both the data sheet and all appropriate change notices, but also failed to review the data sheets for correctness. A contributing factor is that the system for updating procedures and data sheets used by the I&C technicians to perform calibrations does not appear to be sufficiently formalized to preclude this error. In this instance, no safety related problems arose, however, the use of outdated procedures and data sheets for the performance of surveillances on safety related equipment could lead to more significant problems. The currency of procedures in the I&C shop is further discussed in paragraph A.6.4. The licensee should review this system to ensure it is adequate to prevent recurrence of this error.

A.11.4 Procedure Adherence

Allegation

I&C shop technicians who encounter problems while performing calibration and surveillance procedures are finishing the procedure and then initiating a correction to the procedure. The alleger stated this incorrect behavior could be verified by comparing the completion date on data sheets with the procedure change date on two recently completed procedures: IC2426,"Feedwater Control System Calibration Procedure" and IC2412,"DC Switchgear Room Halon Fire Supression System Functional Test Procedure."

Discussion

The correct action for a technician to take when a problem is encountered while performing a procedure is to stop work on the procedure, resolve the discrepancy, and then to finish the procedure. The employee believed that technicians were finishing the procedure and then resolving the discrepancy with a procedure change. The inspector investigated this allegation by reviewing the completion dates and the revision dates of the procedures cited by the alleger.

Procedure IC2426 was authorized by the Operations Department to be performed on February 14,1989. A change was approved by the Plant Operations Review Committee (PORC) on February 23,1989, and the procedure was completed and signed off on April 6,1989. The technician had encountered a problem with the data sheet while performing the procedure. He stopped the work, initiated an approved change to the data sheet, and then went back and completed the job.

Procedure IC2412 was authorized to be performed on March 30,1989. A change was authorized by PORC on April 10,1989, and the procedure was signed off as completed also on April 10,1989. In this case, the technician questioned a minimum battery voltage specified in the procedure. He stopped work, contacted the battery vendor for the correct value, and then obtained a PORC-approved change before completing the procedure.

Conclusion

In both cases cited by the employee, the technician involved performed just as he was required: he stopped the job, resolved the discrepancy, and then completed the procedure. The allegation that technicians are completing flawed procedures and then initiating corrective changes is unsubstantiated in this specific case. Refer to Section A.6.4 for further discussion on this subject.

A.11.7 Reactor Coolant Pump (RCP) Heat Sensor

The employee stated that the plant operated for the last operating cycle with an inoperable heat sensor above RCP "A". He also said that this might affect RCP "C". Since RCP "A" has an oil leak problem, the employee's concern is there may be a fire hazard in the RCP "A" area.

Detail

There are 5 heat sensors in each of the 4 RCP areas. The inspector reviewed the maintenance records for the fire protection system in the RCP "A" and RCP "C" areas. The records indicated that on May 9, 1988, the fire detection alarm for the RCP "C" area was activated. Inspection by the licensee revealed that one of the fire heat sensors was damaged. This heat sensor was subsequently replaced. On May 19, 1988, this heat detection system failed the surveillance test. The licensee found 3 additional heat detectors which were damaged. These detectors were easily damaged during an outage when people are working in the area. The defective detectors were replaced and the surveillance test was completed on May 20, 1988. The whole incident occurred within a mid-cycle outage (Millstone 2 was shut down from May 6, 1988 to May 22, 1988). In addition, the Millstone 2 fire hazard analysis indicated that for each RCP area, 128 gallons of lube oil plus 28 gallons of transient lube oil were included in the fire hazards analysis. Therefore, the fire hazard from pump oil has been considered and is within the bounds of the analysis.

Conclusion

This allegation is unsubstantiated because the Unit was not operating during the entire incident.

A.14.3 Radiation Monitor Drain Valves

Allegation

"The PIOP's radiation monitors RM-9116, RM-9049, RM-4262, RE-245 and I believe RM-9327, all contain a sample canister with a drain valve. What happens is that the drain valve gets contaminated, and it has a tendency to bring the background radiation up on that monitor to a point where you are dealing at 1E+5 and 1E+6 (counts per minute) levels. It is a very prevalent problem on RM-9116 and RM-9049. I made a recommendation on 5-23-88 that we buy some foot valves. They told me that the whole canisters were over in the warehouse, and that I can just take the whole canister and change it. Why would I want to contribute enormously to low level radioactive waste, when I can take a foot valve and put it in?"

Discussion

The nature of the liquids being monitored by RM-9116 and RM-9049 cause accumulated increases in background that are not a problem for the other monitors. On July 13, 1989, the background level was 2.2E+5 counts per minute (cpm) for RM-9049 and 1.8E+5 cpm for RM-9116 whereas the other detectors were typically less than a few thousand cpm. The inspector noted that even with this elevated background, the detector sensitivities were still within the limits specified in the Final Safety Analysis Report (FSAR).

In discussions with I&C Engineers, it was stated that teflon coated canisters were originally installed in 1985 to help reduce the buildup of contamination and ease in their decontamination. In addition, they stated that trapped material in the foot valve doesn't contribute significantly to the overall background. In support of this, Unit 3, which uses the same canisters, foot valves, and levels of waste activity but are not teflon coated, have less of a background problem.

The inspector reviewed the maintenance histories for RM-9049 and RM-9116 and noted that the teflon canisters were first installed in late May, 1985. Information obtained from the store room showed that no canisters were replaced in 1987 or 1988, and only one was replaced in 1989.

Conclusion

This allegation is unsubstantiated. While it is true that the background levels on RM-9049 and RM-9116 are substantially higher, it is obvious that the canisters are seldom replaced and do not contribute to the large volumes of low level waste typically produced annually. Performance data from Unit 3 would lead one to believe that the teflon coating may be more of a problem than the foot valve. The high background levels for these monitors do not affect the safety aspects of their designed functions and are still within the criteria established in the FSAR. In addition, Corporate Radiological Assessment is considering guidelines (upper limits) on backgrounds to better assure continued compliance with the FSAR sensitivities.

A.15 Radiation Monitor Jumpers Installed

Allegation

On June 16, 1989, I&C technicians performing a monthly functional test of radiation monitor RM-9049 found jumpers for the liquid sample pump low flow switch still installed from the last functional test. This could render the system inoperative by preventing low flow indication. No PIR was submitted.

Discussion

Surveillance Procedure SP2404AC, "Clean Liquid Radwaste Process Radiation Monitor RM 9049 Functional Test", Rev. 1, was performed on June 16, 1989, under AWO M2-89-06737. During the performance of this test, the I&C technicians noted that the jumpers normally installed in Step 6.2.4.4 and removed in step 6.2.4.7 were still installed. When the system was first installed, the computerized controller would sense sample flow and initiate alarms but the software would not initiate isolation of the discharge. The licensee installed separate pressure switches to perform this function. Software updates have since implemented the isolation function. The pressure switches - these are the switches which are jumpered out in the surveillance procedure - are currently redundant. With these jumpers in place, a failure of the sample pump would still initiate an isolation of the discharge via the flow sensors. The functional test performed on May 19, 1989, was in conjunction with surveillance procedure SP2404AD, "Clean Liquid Radwaste Process Radiation Monitor RM 9049 Calibration", Rev. 1. The calibration required the performance of steps in the functional test to be performed twice - prior to and after the calibration. However, the data sheets used to document the functional test were inadequate in that only one location was provided to document two installations and removals of the jumpers.

Conclusion

This allegation is substantiated. The root cause was failure to follow the functional test and is an additional example of an apparent violation of failure to follow procedures (reference paragraph A.6.4). The inadequate data sheets may have been a contributing factor. The licensee has initiated changes to the data sheets to allow for proper documentation of jumper control.

A.16.2 Failed Fuel Monitor

Allegation

"RM-202, the Failed Fuel Monitor, has never worked. The linear channel looks for specific peaks. It is calibrated using Yttrium 88 to track Rubidium. Voltage drifts from 510 volts."

Discussion

The Failed Fuel Monitor, RM-202, which is not a required monitor, was installed to provide additional information to assess core damage during accident conditions. It is a Sodium Iodide (NaI) scintillation detector that sends signals to two electronic modules - a linear channel and a logarithmic channel. The log channel basically looks at the entire spectrum and indicates total activity in the primary coolant. In contrast, the linear channel utilizes fixed position upper and lower level discriminators which, in effect, creates a narrow energy "window" allowing the unit to quantify activity at one specific energy (i.e. look at a particular peak of a specific isotope). The licensee currently uses the level of Rubidium-88 (Rb-88) in the coolant as an indication of the level of core damage. Rb-88 has a peak at 1836 keV, but since it has a half-life of only 17 minutes, it is not feasible to perform calibrations using this isotope. On the other hand, Yttrium-88 (Y-88) which also has a peak at 1836 keV but has a much longer half-life, 106 days, it is more appropriate for calibration purposes. Since the position of the "window" in the linear channel is fixed, the spectrum is shifted left or right using the high voltage during calibration to center the 1836 KeV within this window. This makes the stability of the high voltage critical to the proper operation of the linear channel in that small changes in high voltage would move the peak entirely out of the window.

On October 18, 1985, using a Y-88 source, the proper high voltage was determined to be 562 volts as documented in surveillance IC2422F, "Failed Fuel Process Radiation Monitor Calibration", and the corresponding channel indications utilizing a 4.8E-1 uCi/cc source were 5E+4 cpm for the linear channel and 2E+5 cpm for the log channel. When the surveillance was subsequently performed, on February 25, 1988, the high voltage was found to have drifted down to 466 volts. Channel responses at that voltage using a source of the same activity were 20 cpm for the linear channel and 130 cpm for the log channel. These readings indicate that the monitor was essentially inoperable for its intended purpose.

Conclusion

This allegation is substantiated. Documented surveillances indicated that for a period of time between October, 1985, and February, 1988, the monitor was inoperable and would have been unable to provide information, as intended, to assess core damage. In discussions with I&C and Corporate Radiological Assessment, it appears that licensee management was not aware of the situation. Radiological Assessment personnel stated that the detector will be evaluated to determine the cause of the high voltage instability. Although the monitor is intended to provide core damage information during accident situations, it is neither required equipment nor is it the only source of information for the licensee. Had use of the monitor become necessary, the licensee stated that the discrepancy between the monitor indications and other information would have been noted and would not have affected their decision making.

B.2.1, B.2.2, B.4.3, B.4.6, B.4.8, B.4.9 and B.4.10 Pressure Gauge Calibration

Allegation

On October 7, 1988 it was alleged that pressure gauges were not being properly calibrated. Specific concerns were expressed with regard to the method and procedure for determining hysteresis during calibration and the possibility that hysteresis acceptance criteria could result in the acceptance of gauges that had twice the allowable error for decreasing pressure. Misconduct on the part of a specified individual in that he falsified data was also alleged. Furthermore, it was alleged that the Resident Inspectors did not do a proper review of these concerns when they were first raised and that the licensee did not respond to these concerns in an adequate or timely manner.

Discussion

Communications on and understanding of this issue have been complicated by many factors, most of which are not technical issues. To help resolve this issue, it was reinspected by a senior technical staff member from the NRC headquarters who had no previous connection with the allegers, resident inspector or any supervisor assigned to Unit 2.

B.2.1.1

Allegation

"The pressure gauge calibration procedure IC1104A, has been changed. The procedure is inadequate to assure that pressure readings will be accurate in the decreasing direction. Checking a gauge at only one point in the decreasing direction will not show all changes in a gauge due to where sticking or crystallization of the bourdon tube."

Discussion

The first issue addressed was the question of the adequacy of test procedure IC1104A. Two concerns were expressed. The first of these has to do with the number of test points to be used in the direction of decreasing pressure. The previous practice had been to use five points. A recent change to IC1104 resulted in a single recorded point at approximately 50% of scale. It was alleged that this was not sufficient because the hysteresis (the difference between readings for increasing and decreasing pressure at the same actual pressure) might be larger elsewhere in the instrument range.

This belief on the part of the employee is contrary to the manufacturer's experience, as reflected in the manufacturer's recommendations for a single check point in the decreasing direction,and is contrary to the construction of the instrument which provides positive stops beyond both ends of the scale. This issue had been previously evaluated by the resident inspectors and reported in Inspection Report 50-336/88-24, dated December 14, 1988. Additional information on this subject was developed as a part of the evaluation of the misconduct charge and is presented below.

The second concern under the adequacy of IC1104 issue is the concern that an error amounting to twice the allowable is permitted for decreasing pressures. To understand the employee's concern, one must first understand how the hysteresis check is made, the philosophy behind the check and, finally, the consequences.

Hysteresis checks are made by exercising the gauge for several full cycles of its range and then increasing the pressure to near 50%. The reading at this pressure is recorded, the pressure is increased to 100%, the pressure is then reduced to the same point near 50% and a second reading is recorded. The point near 50% is selected for ease of reading the instrument scale (i.e. on a major division). Because the design of the instrument constrains readings at the extremes of its range, differences in increasing and decreasing pressures at the same value are not as large at the end points as they are near the center of the range. Accordingly, any point near the center of the span can be used to detect hysteresis. Hysteresis is caused by nonlinear elastic material properties in the sensing mechanism of the gauge.

There are no perfect gauges. Typically, the gauges used as standards at the Millstone site have a tolerance of 1 minor division or 0.1% of scale (whichever is larger) as specified in its calibration data sheet. The repeatability (capability of the instrument to give the same reading under the same conditions) is one half of the tolerance. In other words, for any two readings under the same circumstances the readings may vary by the tolerance (e.g.. an actual pressure of 101 psig may be read as 100 and 102 psig on a 2000 psig instrument).

As it is presently written, the hysteresis check is acceptable if the increasing and decreasing pressures at the checkpoint are within the tolerance. The philosophy behind this procedure is that any two readings separated by not more than the tolerance is the same actual value. Unfortunately, this philosophy neglects the

possibility that an error exists such that one gets a one tolerance unit offset for the increasing pressure and a two tolerance units offset for decreasing pressure. Although this satisfies the hysteresis check, it indicates a gauge with double the permissible error for decreasing pressures.

Because of the possibility that gauges certified under IC1104A may have been used in one of the plants with unacceptable errors, the calibration data of gauges selected for audit under the misconduct issue were reviewed. In no instance was a gauge approved that had a double error.

Conclusion

Based on the design of the gauges and the information developed in the investigation of the misconduct issue below, the allegation with regard to the minimum number of data points required in the decreasing direction is unsubstantiated. However, the allegation with regard to accuracy is substantiated. Therefore, an engineering basis should be developed to support current calibration practices or the procedure modified to control the permissible error for decreasing pressure. This item is unresolved pending completion of licensee actions (50-336/89-13-10).

B.2.1.2

Allegation

It was alleged that an instrument technician was not following procedures. The employee provided the NRC with a list of instrument nonconformance reports that would demonstrate that the pressure gauge hysteresis was out of tolerance, thus proving the alleger's co-worker was not following procedures.

Discussion

From a list of 93 Instrument Non-Conformance Reports (INCR) supplied by the employee, 64 records, selected at random, were obtained from the plant files. These INCR were reviewed to eliminate instruments that had been downgraded to limited use, retired or were not pressure gauges. The remaining 54 records were then sorted by instrument number and weighted values were assigned based on whether the instrument had an INCR filed by the employee or the instrument had an INCR filed by anyone else. The three highest scoring gauges in the calibration shop were tested in the presence of one or more NRC inspectors. One gauge was 0-125" of water with a 0.2" tolerance, one was a 0-830" of water with a 1" tolerance and the last one was a 0-100 psia with 0.1 psi tolerance.

To evaluate the effect of instrument cycling, the first two instruments were not cycled prior to data collection. In the first segment of the test, the instruments were loaded to near 50%, recorded, loaded to 100%, unloaded to the near 50% point, read and unloaded to 0. This cycle was repeated several times. The data taken by the NRC are presented in Table 2.1.1.

TABLE 2.1.1

INSTRUMENT	INPUT	UP 1	DOWN 1	UP 2	DOWN 2	UP 3	DOWN 3
QA 5200	0	0.05	0.1	----	0.1	-----	0.1
(0.1=MD)	62	62.1	62.1	----	62.1	62.1	62.1
	125	125	-----	125	-----	125	----
QA 280	0	0.0	0.0	----	0.0		
(1=MD)	410	410.5	410.7	410.5	410.7		
	830	830+	-----	830+	-----		

NOTE:
UP # indicates the number of the run for increasing pressure.
DOWN # indicates the number of the run for decreasing pressure.

The third instrument was cycled three times from an indicated value of 15 to 100 psia and then loaded to 50 psia, read to be 50.05 psia, loaded to 100 psia, unloaded to 50 psia, read to be 50.1 psia and unloaded to 15 psia. The instrument had been found at 14.8 psia with a barometric pressure of 14.7 psia and set to 15 psia for these tests. The tolerance for this instrument is 0.1 psi.

After the first two instruments were tested for hysteresis, they were tested for calibration. For the second and third instruments, increasing and decreasing data were recorded as shown in Table 2.1.2.

TABLE 2.1.2

INSTRUMENT	INPUT	UP	DOWN
QA 280	130	130	130
(1=MD)	260	260.5	260.8
	390	389.5	390.2
	520	519.5	519.5
	650	649.5	650.5
	780	780.5	-----
QA 203	15	15	15
(0.1=MD)	20	20.05	20.05
	40	40.08	40.08
	60	60.05	60.1
	80	80	80
	100	100.1	------

The most interesting part of this test was that similar but different readings were obtained by the second inspector and the technician who operated the dead weight tester. (Each individual got different readings from some of those given in the tables at some points.) The pattern that developed from examination of the differences was that different techniques were used to make the readings and to interpolate between the minor divisions. The technician used a magnifying glass, the NRC inspectors did not. One inspector attempted to interpolate between minor divisions. The other inspector and the technician did not. Only three readings were recognized (i.e. lower minor division, half way between minor divisions or higher minor division). The reasoning given was that these three results are the only meaningful results within the repeatability of the instru-

ment. This procedure eliminated most of the differences between the increasing and decreasing pressure readings. However, no matter which system was used, no violations of the tolerance limits were detected. It was also noted that the largest differences between readings for increasing and decreasing pressure occurred at near mid-scale.

Conclusion

Based on the observed responses of the three most troublesome instruments available in the shop at the time of the inspection and the noted effect of data collection techniques on the data, the staff was unable to determine if the allegation was true. However, the test results indicate that other variables can contribute to variations in data other than failing to follow the procedure.

B.4.4.1 Multimeter Calibration

Allegation

On May 15, 1989, the employee restated a previous allegation that had been addressed in NRC Inspection Report 50-336/88-24. The allegation dealt with the apparent failure of a co-worker to follow the calibration procedure for multimeters. The allegation had apparently been noted in late 1987. He alleges that, although the NRC had dismissed the technical aspects of the previous allegation, they had missed the point that the co-worker had failed to follow procedures.

Discussion

Procedure IC 1101, Revision 4, required that the multimeter be set to a nominal value by adjusting the standard and recording the setting of the standard. In the previous inspection, the NRC observed this procedure being performed using a fixed resistance Fluke, Model 5100B, calibration standard and correctly reported that the procedure could not be accomplished as written using the instrument that the technician had selected. Later, procedure IC 1101C, Revision 5, was changed to specify using a decade box for the calibration because it is capable of variable resistance settings and the procedure can be accomplished as written.

The fact that the procedure was not followed has been previously reported by the NRC inspector in the 1988 report. The report also noted that the technical aspect of not following the procedure did not affect the validity of the calibration, only the direction of the error. The significance of an isolated case of not following the procedure was deemed to be inconsequential; however, when viewed in the context of a series of these events, it does have a significance.

Conclusion

The inspection team concurs with the finding in the previous report that there is no technical significance with regard to the calibration techniques of either method. However, the failure to follow procedures in this case is another example of the conditions described in paragraph A.6.4 of this report.

B.4.4.2 - Overhead Crane In Containment Has Never Been Load Tested

Allegation

On the morning of June 15, 1989 during the interviews of the employees, one indicated that the overhead crane in the containment was never load tested.

Discussion

The Bechtel Corporation, Millstone Unit 2, Job 7604 Inspection Report, dated August 17, 1972, indicated that the containment polar crane was tested in accordance with the Harnischfeger Crane Acceptance using a test load of 201 tons and met all the requirements of the tests and the specifications. On August 18, 1972, a similar report indicated that the auxiliary hoist on the Containment Polar Crane was load tested using a test load of 44.25 tons. The tests were found to be acceptable. The Millstone Lead Startup Engineer accepted the polar crane on January 15, 1975, on the basis of all tests being satisfactorily completed.

The NRC Generic Letter, dated December 22, 1980, Control of Heavy Loads, requested the licensee to review the controls for the handling of heavy loads to determine the extent to which the guidelines provided in the NUREG-0612 were satisfied at Millstone 2. The guidelines required the initial load testing of the polar crane but did not require periodic load testing unless the crane was modified. The guidelines required periodic inspection of the crane. The licensee responded with letters, dated June 25, 1981, July 20, 1981 and April 16, 1982. By letter, dated July 19, 1984, the NRC provided a Safety Evaluation and a consultant's Technical Evaluation Report which found the licensee's program acceptable.

The NUSCO Quality Assurance auditors performed an audit from March 15 to 17 and 23, 1983 to verify compliance in the area of control of heavy loads, NUREG-0612. No deficiencies were found.

Conclusion

The allegation is not substantiated. The licensee initially load tested the containment overhead polar crane for acceptance and performs inspections of the crane during every refueling in accordance with the guidance of NUREG-0612.

B.4.11 Absolute Pressure Gauge Calibration

Allegation

On March 18, 1988 it was alleged that "a barometer was not being used" in the calibration of absolute pressure gauges for some period of time.

Discussion

The staff review only located one absolute pressure gauge that is being used as a calibration standard at the Millstone site (QA 203). Its calibration history indicates that a barometric correction was not made during the calibrations of August 14, 1987, November 16, 1987 and February 23, 1988. These same records also show that no adjustments were made and the calibrations of May 15, 1987 and May 10, 1988 (when a barometer was used) did not require any adjustments. Furthermore, procedure IC1104A did not require a barometric correction until Revision 5 (June 23,1988).

Conclusion

Because the only absolute pressure gauge is now being calibrated with a barometric correction and did not require re-calibration when a barometer was not being used, the staff concludes that the allegation is substantiated but has no safety consequences.

B.4.12 Overcurrent of Calibration Standard

Allegation

On March 18, 1988 it was alleged that "Calibration of some megohmeters with a Fluke 5100B Calibration Standard overpowered the resistance section of the standard. This could cause damage to the standard or cause it to become mis-calibrated."

Discussion

The staff review resulted in the discovery that the 500 volt megohmeters are no longer carried as 10 CFR 50, Appendix B, equipment and, therefore, are not checked in the calibration facility. Furthermore, the maximum current that these devices can deliver could not be determined but the voltage rating of the Fluke 5100B resistance standard was exceeded. However, it was determined that the Fluke 5100B devices are vendor calibrated semi-annually. The resistance sections of these devices have always remained in tolerance and have never been adjusted.

Conclusion

Although the staff has concluded that these devices have not been damaged by testing megohmeters, the allegation is substantiated but has no safety significance.

B.5.2 Neutralizing Waste Discharge Monitor

Allegation

"I found the Neutralizing Waste Discharge Monitor in a condition where all the setpoints and conversion constant for converting counts per minute to microcuries per cc in the condition that they were put in during the monthly functional test. So essentially the monitor was inop (SIC). It had been that way for probably a month."

Discussion

RE-245, "Waste Neutralization Process Radiation Monitor", is a computerized PIOP's unit used to monitor the discharge of neutralized waste water from the regeneration of the condensate demineralizers (part of the normally clean, secondary system). Unlike the other units which read out in counts per minute, this monitor utilizes a programmable conversion constant so that the meter indication is directly in uCi/cc. This constant is determined during the performance of the calibration procedure, SP2404AQ.

During the performance of SP2404AQ on April 12, 1989, it was discovered that many of the programmable functions were not at their correct values. The unit has six such functions: Hi rate, Alert, Low Rate (fail), Delta, Time, and Conversion Constant. The high and alert setpoints are changed for each release and are therefore expected to vary, the other functions are normally unchanged. The table below lists their typical values, the values temporarily used during functional test SP2404AP (which was the last surveillance performed prior to the calibration) and the values as-found on April 12.

Function	Typical	Functional	As-Found
Hi Rate	E-5	1E+4	1E+5
Alert	E-5	1E+3	1E+5
Low Rate	E-8	1E-1	7E-8
Delta		1E+4	1E+6
Time		1E+0	1E+0
Constant	5E-9	1E+0	1E+0

In comparing the values used during the functional tests and the as-found values, it is highly unlikely that the incorrect values were left from the previously performed functional test. The inspector questioned the licensee about any special tests that may have been performed and whether groups, such as operations or chemistry, could have altered the values. The licensee has documented in an internal memorandum (MP2-I-1397), dated August 3, 1989, that the most probable cause was a loss of power to the Unit and the subsequent loss of programmed data values.

To determine the significance of these changes, had a release been performed under the as-found conditions, the inspector calculated, using a conversion constant of 1.0, the equivalent high rate alarm (which would function to terminate a release had the activity exceeded expected values) of 5E-4 uCi/cc. Although this value is higher than what is typically used (1E-5), it is well below the concentrations that are released from other liquid waste streams. For example, an Aerated Liquid Radwaste Tank, discharge #2109, released on March 23, 1989, had an activity of 3.76E-2 uCi/cc before dilution. Typically, the high rate alarm would have been programmed to the correct value at the time of the release.

Conclusion

This allegation is substantiated. Many of the programmable setpoints for RE-245 had been changed although the licensee could not explain under what conditions they were changed. The licensee stated that the chemical analyses performed prior to each release indicated little or no radioactivity above background. With an incorrect conversion constant of 1.0 rather than 5E-9, liquid radwaste with an activity of approximately 5E-4 uCi/cc could have been released prior to activating the high alarm. However, this is still far less than releases of other waste streams and would be correspondingly well below any regulatory limits.

B.6.3.1 Instances Where Procedures Are Not Followed. Multi-point Recorder Procedure - Jumper Not Installed.

Allegation

This allegation deals with a prevailing attitude at Millstone 2 of not strictly following procedures. The example cited concerns procedure SP2404AH, Waste Gas Process Radiation Monitor, RM 9095, Calibration. The employee stated that technicians, including himself, routinely don't put a jumper in multi-point recorders where identified on the procedure, but merely wait for the recorder to cycle through the channel of interest and then record the data.

Discussion

Step 7.1.7 of SP2404AH requires: "Select point #7 on RJR 9129 for display by placing jumpers across points 7 and c and disconnecting the relay select connector." The employee claims that all the technicians who have been involved in the calibration of this monitor do not place the jumper, but merely observe the display for point 7. At least two technicians, including the alleger, have performed the procedure in this manner. The procedure has been in use since February 1986. On January 25, 1989 the procedure was changed to incorporate the method of calibration of not placing the jumper. It appears that this method of calibration is simpler and does not place the recorder in a out-of-service condition.

Conclusion

The allegation relating to the procedure SP2404AH is substantiated. It is not safety significant. The allegation as to whether there is a general attitude and practice of not following procedures is discussed in A.6.4.

B.6.3.2 Instances Where Procedures Are Not Followed - Changes In I&C Procedures Could Not Be Adequately Reviewed. Cannot Tell What Was Removed And Disagreed With The Changes

Allegation

In this case the employee had a problem with the procedure review process. The licensee wanted to shorten procedures to help outage schedule reduction. A co-worker was detailed to revise the Electro Hydraulic Control (EHC) System

Calibration procedure, IC2425B, by removing several steps. The employee was detailed to review the changes and disagreed with the changes. When he presented his concerns to his supervisor, the supervisor could not concur because he was unfamiliar with the system. The employee requested a third party review and the supervisor proposed a meeting. The employee indicated neither occurred. The main concern of the employee is that the procedure was shortened to meet outage scheduler demands.

Discussion

The procedure of concern is for calibrating the EHC system which is part of the main turbine/generator system and thus is not safety related. The Instrumentation and Control Department did in fact want to shorten procedures to support the outage schedule. One other procedure in the I&C department was revised during the latter part of 1987 to support the outage schedule.

The alleger was the original author of procedure IC2425B in July 1986. The alleger and the co-worker who prepared the revised procedure were the only I&C technicians that took the special training in the EHC system. The procedure is a very complex and long procedure. In preparation for revising the procedure, the co-worker discussed the procedure with the vendor who suggested removal of some steps as being unnecessary. Also, other steps were removed from the original procedure where they were duplicated in other areas of the calibration process. The original and revised procedures are nearly alike except for those steps that were removed.

The I&C supervisor indicated that when the employee was detailed to review the EHC procedure, a procedure that he had developed, he became disturbed that it was being changed. The employee indicated that he was under pressure to do the task. However, the alleger and the co-worker, the two I&C technicians that were the only people in the I&C department with familiarity with the EHC system, did meet to resolve the concerns. The alleger concurred in the revised procedure October 30, 1987.

Conclusion

The allegation that procedures were shortened to accommodate the outage schedule is substantiated by at least two instances. The issue is not safety significant.

B.6.3.3 and A.8.3

Allegation

"Waste gas calibration RM 9095 was in progress, which took the recorder out of service. We took it out of service about 1:00 p.m. I believe it was January time frame. At about approximately 1:30, maybe half an hour later, a PEO came up to take a reading off the recorder ... to monitor the discharge. The discharge was in process and the recorder was out of service, there was no reading he could take. The PEO did know it was out of service at the time. I had notified the SCO, the senior controlling operator, that we were taking it out of service.

There was a miscommunication there and the discharge was going on. When we do a calibration on something, we are required by some of the older procedures to take the recorder out of service. What that does is in-op the other 11 points that are on the recorder. In fact, for some period of time while that calibration was ongoing, the monitor, the recorder was not recording the activity of that discharge. The rad monitor was protecting it in that if it got above a certain level, it would have still shut the valve. I think the safety concern you need to look at is the fact that the I&C supervision and the people who were controlling the control room allowed that to take place while a discharge was ongoing. That is what the safety consideration is, that they were not looking at their job enough to recognize that this guy was going to take the recorder out of service at the time that they were having a discharge."

Discussion

On January 17, 1989, I&C technicians performed Surveillance Procedure SP 2404AH, "Waste Gas Process Radiation Monitor, RM 9095, Calibration", Rev. 0. The Senior Control Operator (SCO) signed the "Surveillance Cover Sheet" authorizing the I&C technicians to proceed with the calibration. At approximately 1:00 p.m., recorder RJR 9129 was jumpered, effectively disabling the recording of all data points except the Waste Gas Process Radiation Monitor, RM 9095, as required in step 7.1.7 of the surveillance procedure. RJR 9129 is a 12-point recorder which also includes the Aerated Liquid Radwaste Radiation Monitor, RM 9116. Concurrent with the calibration of RM 9095, plant operations staff discharged the Aerated Waste Sample Tank (AWST) under release permit 2024. The controlling Operations procedure was SP 2617A, "Radioactive Liquid Waste Discharge", Rev. 15, and the corresponding data sheet was OPS Form 2617A-1. The procedure allows for discharges to take place even though the recorder is out of service. Step 6.1.7 of the procedure requires the operator to record the start date, time and discharge permit number on the chart for Radiation Recorder, RJR-9129. In addition, it states that if the recorder is inoperable (as was the case), then the PIOP's must be setup to produce historical reports. The PIOP's is the computerized console that monitors the radiation level and flow rate of the discharge, terminates a release if parameters are outside of predetermined set points and additionally provides input signals for both the control room recorder (RJR 9129) and control room annunciators. The PIOP's can be programmed to record specific data during a release and provide the operator with a historical print out that can be used in lieu of the recorder in the control room. The inspector reviewed the chart paper from recorder RJR 9129, OPS Form 2617A-1 and release permit 2024 and noted the following:

1) The release occurred from 1:27 p.m. to 2:27 p.m. on January 17, 1989;
2) The recorder was inoperable for all data points except the waste gas monitor prior to and during the release of the AWST as evidenced by the lack of the remaining 11 data points on the chart;
3) The radwaste operator noted the start of the release on the chart recorder;
4) Signoffs by the radwaste operator on OPS Form 2617A-1 and the lack of an attached historical report from the PIOPs indicated that the radwaste operator mistakenly considered the recorder operable during the release.

Conclusion

The allegation was substantiated. The recorder RJR 9127 was out of service during release 2024 of the AWST on January 17, 1989, due an ongoing calibration of the waste gas monitor. Even though it was obvious from the lack of multiple data points for a period of approximately one half hour prior to the release that the recorder was not operational, the radwaste operator failed to identify the situation and take the appropriate actions of generating the backup historical reports. Although the operations staff failed to follow procedures, the PIOP's was programmed with the appropriate setpoints to adequately terminate the release if any parameter was not within its expected range. The recorder and/or historical reports provide backup documentation and do not affect the safety aspect of a discharge. The actual release was within established administrative and regulatory requirements. The failure to follow procedures issue is generally discussed in paragraph A.6.4.

B.6.3.4 Misuse of Calibration Standards

Allegation

On March 18, 1988 it was alleged that "Calibration standards are allowed to go out into the plant where they receive treatment and are subjected to an environment which may be detrimental to their accuracy."

Discussion

The staff's review of calibration histories for the instruments identified by the employee in a private interview as being subject to this abuse failed to detect any pattern of hidden, use induced failures. Occasionally, an instrument was damaged by carelessness, but the damage was both severe and obvious (e.g. dropping, severe overranging to the point of bent indicators, and contamination of air gauges with liquids). The instruments that most frequently required post-plant usage re-calibration were the temperature references. However, the alleger himself on one occasion noted in an Instrument Non-Conformance Report that "the error found in the standard is negligible compared to the tolerances on the equipment calibrated with it." However, the licensee has purchased a new temperature standard that will be restricted to shop use in order to reduce the likelihood that a reference device will be damaged by field use.

Conclusion

The statement that calibration standards are permitted to be used in the plant is true. The allegation is of itself a statement of fact. However, the inspector did not find a single instance where such use damaged an instrument and the damage was not detectable before reuse or where the damage was hidden and so severe as to require re-calibration of plant instruments.

As a result of the apparent sensitivity of the temperature references to drift, it is suggested that new tolerances be developed for them, or that a more rugged device be obtained for field calibrations.

B.6.3.5 Allegation

On March 18, 1988 it was alleged that "the same dead weight tester was being used for salt water and fresh water gauges" and that "we have a requirement to keep oil gauges and salt water gauges and fresh water gauges all separate so you don't contaminate a clean water system with them."

Discussion

Water samples were taken from each of the dead weight testers in the calibration facility that are used for water gauges. (A separate oil filled tester is used on the oil gauges.) Chlorides, as determined by titration by two different chemistry technicians, ranging from 9.42 to 21.79 ppm were detected. The sample water was orange in color suggesting the presence of iron oxides.

The licensee did an immediate engineering evaluation on the volume of water in a typical gauge and the consequences of injecting this volume (20 ml) at a concentration of 22 ppm into a steam generator (the most sensitive location at Unit 2). The resultant concentration is below the limits of detectability. However, the licensee has not completed a similar study of the effects of 20 ml at 22 ppm chlorides on the stainless steel instrument tubing.

Conclusion

The allegation is substantiated and the licensee should evaluate the consequences on affected units instrument tubing and take any appropriate corrective action resulting from the evaluation. This item is unresolved pending completion of the licensee's evaluation and NRC review (50-336/89-13-11).

B.7.1 Procedure Step In Procedure SP2404AO Not Correct, Lax Attitude In Following Procedures.

Allegation

The employee cites the case of procedure SP2404AO, a procedure for calibration of spent fuel pool area radiation monitors, that obviously contained an error in one step but was performed without correcting the error. In the alleger's view this is an example where the management and employees are not strict with regard to procedures.

Discussion

Procedure SP2404AO was revised as Revision 3 on January 26, 1989 as part of the general procedure upgrade program at Millstone. Revision 2 of the procedure contained two steps, 4 and 5, PREREQUISITES and INITIAL CONDITIONS respectively, that were combined into one step 4, PREREQUISITES, in Revision 3. This now made step 6, PROCEDURE, of Revision 3 the same as step 7 in Revision 2. The appropriate data form was also changed to be consistent with Revision 3. The data form requires the entering of data taken from the previous surveillance, which would be on the data form of Revision 2 and thus would would not match the numbering system of Revision 3 data form. Revision 3 of the procedure

directed the one performing the procedure to enter the "as left" data from step 6 of the most recently completed data form (the form used for Revision 2) into the "as found" data of step 6 when, in fact there would be no step 6 of the most recently completed data form. For one familiar with the procedure, it would be obvious that in performing Revision 3 for the first time to calibrate a monitor, one could actually find the proper "as left" data in step 7 of the Revision 2 data form. However, Revision 3 had been used once before to calibrate one of the monitors and was performed without the correction of the discrepancy. Thus the procedure was performed not in strict accordance with the procedure.

The employee identifies this as an example of a more serious prevailing attitude, in his view, of performance of work not in strict accordance with approved procedures.

All employees are given General Employee Training (GET) on initial employment and are provided the General Employee Training Student Handbook for Connecticut Yankee and Millstone. Both the training and the handbook emphasize: "The correct performance of work in accordance with approved procedures is the most fundamental aspect of QA, and as such is each employee's responsibility." Further, the training instructs: "Ensure you follow the procedure. If an error is detected in the procedure, stop the task, inform your supervisor and do not proceed until the error has been resolved." Specific instructions for correcting procedures are contained in Procedure NEO 1.04, Preparation, Revision, Issuance, Deletion, and Control of Nuclear Engineering and Operations Procedures.

Conclusion

The specific allegation regarding the failure to strictly follow procedure SP2404AO, Revision 3, is substantiated. This example alone cannot establish a prevailing attitude of management and employees with regard to following procedures. The specific example is not safety significant. The subject of procedure adherence is discussed more fully in Section A.6.4.

B.7.2 Cover Up Of Activities In The Metrology Laboratory

Allegation

On June 7, 1989 it was alleged that "the licensee is covering up activities in the metrology calibration laboratory." The allegation was based on the fact that the licensee refused the employee access to records which were outside his task assignment needs. This resulted when the employee attempted to collect data to substantiate his concerns. These records were reviewed and are discussed by the NRC in paragraph B.2.1.2.

Discussion

The staff reviewed this issue as a part of the charge of misconduct involving falsification of records under B.2.1 "Pressure Gauge Calibration".

As a part of the staff's activity, the inspector examined most of the records that the licensee is alleged to have denied to the employee. Our review of these documents has lead us to the conclusion that the allegations are unsubstantiated and few have any safety significance. In addition, there is no legal authority to compel a licensee to provide these records to a non-regulatory entity.

Conclusion

The allegation that the licensee was concealing deficient conditions in the metrology laboratory is not substantiated.

C.3.9.2 Reactor Coolant Pump (RCP) Oil Pressure Switch

Allegation

The employee issued a memorandum to his assistant supervisor on the night shift of May 8, 1985. The memorandum reports that the pressure switch at the discharge of RCP "C", high pressure oil lift pump at circuit breaker H105 was being bypassed by a jumper because the pressure switch was not working. The employee's concern is that the inoperative pressure switch has not yet been replaced and the bypass jumper has not been removed.

Discussion

The inspector noticed that there is a 3-year difference between the date of issue of the memorandum and the date the incident took place. The memorandum was issued on May 19, 1985. The employee's testimony also said that this is a 1985 issue. However, the incident as described in the memorandum occurred on the night of May 18, 1988. The inspector checked with the employee. He agreed that both the memorandum issue date and the date in the testimony were incorrect; they all should be 1988, not 1985.

The subject pressure switch receives signals from a pressure transmitter which measures the discharge pressure of the high pressure oil lift pump. The pressure switch has a pair of contacts which close when the pressure is above 50 psig. The contacts are used for the interlock of the RCP "C" starting circuit at circuit breaker H105. On May 18, 1988, the pressure switch failed in the open position, thus preventing the start of the RCP "C". The licensee has a procedure that allows them to bypass the interlock with a temporary jumper. The safety impact of this incident was evaluated by the licensee and documented in their Jumper Device Control Index No. 2-88-62, dated May 19, 1988. The defective pressure switch was replaced, the jumper removed, and the condition restored on March 1, 1989.

Conclusion

The statement that a bypass was installed in the "C" RCP high pressure oil lift pump breaker is true. However, the alleger's concern is unsubstantiated. The safety issue had been addressed and documented by the licensee, and the original conditions had been restored.

C.3.15.2 Panel C26/RPS Ground

Allegation

On December 30, 1988 it was alleged that the licensee had "known for many years that our reactor protection system was full of grounds" and that plant management had expressed the opinion that "it is not feasible to correct that particular problem."

Discussion

A report prepared by a member of the plant detailing a recent problem was submitted as supporting documentation for this allegation. In addition to the report, the Nuclear Regulatory Commission (NRC) staff had the benefit of a transcribed interview with the employee and corporate correspondence on the same event as well as a chance to review Station Procedure OP2388, "Ground Isolation Electrical Distribution".

Contrary to the allegation which suggests that the licensee has a disregard for protection against stray grounds, the staff has determined that the licensee has an active program to detect, isolate and eliminate stray grounds. However, the June 1988 event cited by the employee represents a particularly difficult situation because the ground was intermittent and could not be isolated before it disappeared. In 1989, there have only been three grounds in Unit 2 that were isolable and, consequently, repaired. One of these was in the reactor protection system, one was in a pump controller and one was in a containment cooling fan.

Ground detectors are provided for 6.9 kV, 4160 V, 480 V, and 120 V vital buses as well as the 125 Vdc systems. Ground problems are isolated to individual panels by opening and closing distribution breakers for the affected load centers and then opening and closing breakers for the loads on the center that clears the fault until the circuit that has the fault is indicated by the clearing of the ground fault detector. The licensee is investigating the cost and availability of better ground detection equipment in order to improve the ability to detect high resistance (low current) grounds.

In order to reduce the likelihood of grounding problems in the future, the company is also evaluating the cost and availability of new vital inverters and transfer switches. The addition of isolation transformers is also being evaluated as an additional defense against transient grounds.

Conclusion

The fact that grounds develop in the reactor protection system and may currently exist is true. However, in view of the low frequency of ground problems, the existence of ground detectors and a suitable isolation procedure and the transient nature of the example cited, the staff has concluded that the licensee is exercising proper measures to deal with the problem.

C.3.19 Ground Cart (related to A.6.19 and C.3.31)

Allegation

The employee stated that following the October 25, 1988 incident, the grounding procedure was revised substantially to prevent recurrence. However, a similar event almost occurred on May 23, 1989.

- On May 23, 1989, the employee was assigned to help another electrician by his job supervisor, who was the electrician involved in the 10/25/88 incident. The job supervisor had a work order approved by the Assistant Maintenance Supervisor (AMS) at the job site without the proper procedure and documentation. This is clearly in violation of section 5.4.1 of procedure AP-QA-2.02C.

- When the employee arrived at the jobsite, work had already begun and the first two items of procedure MP 2720C5, which specifically requires sign-off by two electricians, had been signed off by the first electrician. No boundary was set up and no material accountability was present.

- The circuit breaker being worked on had been removed from the cubicle without following the two electrician rule. This is in violation of section 4.1 of MP 2720C5.

- There were no instructions from the job supervisor or AMS as to which side of the bus was to be grounded. This is in violation of section 3.4 of procedure MP 2720C.

- There were no instructions regarding tagging and its ramifications as required by section 4.5 of MP-2720C5.

- Later, on disconnecting the motor, the electrical equipment qualification (EEQ) boundary was breached without notifying the shift supervisor. This is in violation of section 5.9.4 of procedure ACP-QA-2.02C.

- Quality control requirements do not allow EEQ work to be performed when the work order inspection plan clearly stated no EEQ was required. Subsequently, another work order was generated to track the EEQ requirements.

- Approximately 1 1/2 hours after the job supervisor signed for the tagging, he called the shift supervisor to verify the system was properly prepared for maintenance. This is a reversal of sections 3.2 and 3.3 of procedure MP 2720C5.

Discussion

The inspector reviewed procedure MP 2720C5, Revision 2, procedure ACP-QA-2.02C, and work order package #M2 89-06634. Section 5.4.1 of ACP-QA-2.02C specifies the responsibility of the Lead Department Head to "review and approve the work order and all documentation, procedures, and checklists required prior to

commencement of the work". The work order record indicates that the AMS approved the work order, deleted 3 non-applicable procedures from the computer printout (2701D-8, 2701F, 2701G), and filled out SF 207A, "Inspection Status Evaluation" on May 23, 1989.

The work package contains MP2720C5 Revision 2, which was used by the electrician for the grounding activities. In addition, the AMS also filled in and signed SF 207A, "Inspection Status Evaluation" on May 23, 1989. He justified that no QC verification was deemed necessary because switchgear grounding is a routine maintenance work activity with no special processes involved. Also, no environmental equipment qualification (EEQ) work was associated with the work order. This evaluation was reviewed and signed by the plant QC service on May 23, 1989. The documents in the work package indicated that the AMS was familiar with the nature of the work order.

The work order record clearly indicated (by a footnote) that when the employee joined the first electrician, the first 2 steps had been completed and signed by the first electrician. These 2 steps are:

5.1.1 Ensure ground and test device is properly signed for the switchgear cubicle.

5.1.2 Remove or verify both ends of cables have been removed from ground and test device.

Section 4.1 of MP 2720C5 states, "observe 2 electrician work rule when working on switchgear". The inspector interviewed personnel from the operations department. He said that removal of the circuit breaker from the cubicle is the responsibility of the operations department, not electrical maintenance, although sometimes they may ask the electrical maintenance personnel for help. The inspector interviewed the electrician who helped to remove the circuit breaker. He stated that he was not alone when the circuit breaker was being removed from the cubicle.

Section 3.4 of MP 2720C5 states "Job supervisors, AMS and SS/SCO have determined which side of the cubicle ("Line" or "Bus") is to be grounded". During the interview, the first electrician insisted that the AMS had told him that the "Line" side was to be grounded. Since the alleger was assigned to assist the first electrician, repeating the instruction is not mandatory.

Section 4.5 of MP 2720C5 states in part ".... a thorough understanding of tagging for each switchgear is required prior to the start of work." According to the first electrician, tagging of the switchgear was done by the operations department. He stated that he was familiar with the tagging practices and the ramification of switchgear grounding which is a routine activity for a qualified electrician. He also stated that regular training is provided for electrician covered tagging. Therefore, as a qualified electrician, tagging for switchgear grounding should be thoroughly understood.

Section 5.9.4 of ACP-QA-2.02C requires a job supervisor to notify the shift supervisor immediately upon breaching an EEQ boundary. Based on the results of a document review and discussions with the licensee, removal of the pump motor after the motor is tagged-out is not considered breaching of EEQ boundary. Putting back the motor is EEQ work, but that was covered by another work order.

Sections 3.2 and 3.3 of procedure 2720C5 states "the shift supervisor has selected and placed proper tags for personnel safety and prepared the system/component for work. The job supervisor has verified that the equipment isolation and tagging at the work site represents safe working conditions." The job supervisor stated he had already checked the condition before the start of the job. To be cautious, he verified again with the shift supervisor and asked for operations personnel to hang the final tag before installation of the permanent ground.

Conclusion

The allegation that the first electrician started the job and completed the first two steps of the procedure before the alleger arrived is substantiated. There is no nuclear safety concern associated with this item. However, it is another example of procedures not being explictly followed and is further discussed in paragraph A.6.4. The other seven items were not substantiated.

C.3.29/3.32 Motor Overhaul Of A, B and C Containment Air Recirculating Fan Was Performed Without Procedures.

Allegation

The alleger stated that overhaul of the "B" and "C" Containment Air Recirculating (CAR) Fan motors was performed during the 1988 refueling outage without an approved PORC procedure. Also, that the "A" CAR Fan motor was overhauled during the 1989 refueling outage without an approved PORC procedure.

Discussion

Overhaul of the "B" and "C" CAR fan motors was performed during the 1988 refueling outage under work orders M2 87 07605 and M2 87 07606, respectively. Neither of these work orders' documentation identify a procedure for overhaul of the motors for the CAR fans. However, the licensee indicates by internal correspondence that "B" and "C" CAR fan motors were overhauled using a PORC approved generic motor overhaul procedure MP 2720D3. The procedure addresses repair of 480 volt AC General Electric and Reliance Motors. The CAR fan motors for Millstone 2 are Westinghouse motors. This was the first time that the CAR fan motors had been overhauled since the beginning of plant operation.

In preparation for the 1989 refueling outage, a specific CAR Fan Motor Overhaul procedure, MP 2720D8, was prepared. The procedure was based on the experience gained from overhauling the "B" and "C" CAR fan motors and incorporated instructions for implementing modifications on the motor termination box and the method for connecting the duct work. MP 2720D8, Revision 0, was approved by the PORC on February 6, 1989. The work order for overhaul of the "A" CAR fan motor was approved on February 10, 1989. The work order documentation contains

an approved copy of MP 2720D8, CAR Fan Motor Overhaul. The procedure, MP 2720D8, references the 480 volt AC motor Repair procedure MP 2720D3 by indicating in step 5.4.4 "In accordance with MP 2720D3 - 480v A.C. Motor Repair (EQ), inspect, clean and repair motor as necessary." Therefore, as in the case of the "B" and "C" CAR fan motor overhauls in 1988, the "A" CAR fan motor overhaul of 1989 performed the specific motor overhaul using procedure MP 2720D3.

Conclusion

Although the 1988 work orders do not specifically identify the procedure used for the "B" and "C" CAR fan motor overhauls, procedure MP 2720D3 was available, and the fact that it is referenced in the current procedure, MP 2720D8, implies that it is the applicable procedure. In addition, the licensee has indicated that it was the procedure used for the "B" and "C" CAR fan motor overhauls in 1988. Therefore, based on circumstantial evidence disclosed during this inspection, it is indeterminate if a procedure was or was not used in 1988. Procedure MP 2720D8 was used on the "A" CAR fan motor overhaul in 1989. Therefore, this portion of the allegation is not substantiated.

C.3.30 Bearing Replacement On A Motor Generator Set For A Control Rod Drive Was Done Without A Procedure

Allegation

The alleger stated that the bearings of Motor Generator Sets are replaced without procedures. He also alleges that in his pursuit of developing a procedure, his supervisor did not provide a response to a three part memorandum in which he indicated that he had some safety concerns in developing the procedure.

Discussion

Work Orders for correcting a problem of flywheels having a history of overheating was authorized for motor generator sets "A" and "B" on December 31, 1987. The work was started on each on June 1, 1988. The documentation for Work Order M2 87 03781 for MG set "B" contained a procedure MP 2720H1, Repair Of Mag-Jack Motor Generator Set. This procedure provided detailed steps for removing the exciter, removing the generator rotor, replacing the bearings, motor repair and cleaning. The documentation for Work Order M2 87 03780, sequentially consecutive, for MG set "A" did not contain procedure MP 2720H1. However, it can logically be assumed that, since the work was being performed by the same technicians during the same time period, the work on both MG sets would have been expected to be performed by the same procedure, MP 2720H1.

The work on MG set "B" included disassembly, cleaning and replacement of bearings on the flywheel, making of a special lifting beam and load testing the beam, making of bearing cap and bearing pulling tools, making of a bearing installation tool and alignment after assembly. The work on MG set "A" included only disassembly and replacement of bearings. Tools for performing the task were apparently available from the work done on MG set "B".

It appears that since special tools were made for removing the motor and assembly, the alleger was assigned the job of revising the procedure MP 2720H1. The alleger had never worked on the MG sets before. However, he had worked on overhauling the Containment Air Recirculation Fans which also used large motors that needed special lifting tools. The alleger appeared to have a concern on performing the bearing removal safely and addressed this in a three part memorandum to his supervisor. He had discussed his concern with a contract engineer in the Maintenance Department; also, he mentions a structural engineer in the Maintenance Department. The particular structural engineer designed the lifting device for MG set "B". The supervisor recalls receiving the three part memorandum; however, it was never answered since he had mislaid it. The alleger appears to have stopped work on revising the procedure. It has been a practice in the Maintenance Department for the technicians to bring their job related problems to the engineers, the supervisors or the PMMS planner. In this case, since he had available the previous work orders of the MG sets and his experience in overhauling large motors, it would appear that, with a little research and inquiry, he could continue working on the procedure improvement without a memorandum to his supervisor.

Conclusion

The allegation regarding the bearing replacement on a MG set being performed without a procedure can not be determined. It is probable that the same procedure was used on both MG sets. The allegation that the alleger did not receive a response to his three part memorandum to his supervisor is substantiated.

The allegations are not safety significant; however, the loss of the three part memorandum supports the previous conclusion that the system is too informal to transmit important safety information.

Procedure upgrade at Millstone 2 is work that is performed when a person does not have a specific work order or as "fill in" work. There are no schedules set. Past practice has established the engineers of the department to assist the technicians in the work. Therefore, it would appear that the employee has the resources available to support him in his procedure upgrade.

C.3.31 Ground Cart (related to C.3.19 and A.6.19)

Allegation

The employee stated that Northeast Utilities had determined the root cause of the ground cart incident that occurred on October 25, 1988 as a failure to follow the procedures.

Discussion

The Licensee Event Report (LER# 88-011) indicated that the root cause of the ground cart incident was human error. The electrician performing the grounding activities selected the wrong ground cart which resulted in grounding of "bus" side instead of the "line" side of the breaker.

Conclusion

This allegation is a statement of fact that had been reported by the licensee before the allegation. The safety impact had been evaluated by the licensee and corrective actions had been completed. The ground cart incident was due to an unclear procedure rather than a failure to follow procedures.

C.3.33 Improper Grounding Of instrument Air Compressor

Allegation

On December 30, 1988 it was alleged that the C instrument air compressor microprocessor unit was not properly grounded and that this represented a hazard to public health and safety because it "is used for the control of air valves necessary for the support of reactor safeguards and safety systems."

The allegation specifically cites the National Electric Code, utility specification SP-EE-076 and a microprocessor unit that is a part of the compressor.

Discussion

First, it should be noted that the National Electric Code is not applicable to those facilities necessary for the generation of electric power by utilities.

Secondly, SP-EE-076 is a specification for Unit 3 not Unit 2. This specification is being modified so that it will be applicable to all three units, but, for the present, the electrical specification that is applicable to Unit 2 is the original construction specification 25203-35002. Section 1.27 of this latter document is essentially the same as the cited section 6.1.25 of SP-EE-076. In this regard, the installation of the compressor and the microprocessor (which is in a separate cabinet) now satisfy this requirement. The licensee admitted that they recently corrected a missing jumper around a flexible conduit for the motor that had resulted in a single motor ground path. However, they denied that the microprocessor cabinet had not been properly grounded.

With regard to the compressor, it is an additional compressor not required by the plant design. Furthermore, the three air compressors have no direct safety function because all of the air that is required during an emergency is supplied from storage bottles. The containment purge air that is used in the event of a failure of the recombiners can be supplied from any engine driven compressor if these compressors are not available.

With regard to the computer, it is an alarm sequencer device which is used to determine the time sequence in which alarms are received. This knowledge is useful but not necessary for determining the cause of a compressor malfunction. Its failure can not cause a malfunction of the compressor.

Conclusion

The staff has concluded that the allegation is partially substantiated but is not safety significant.

C.3.34 Cathodic Protection Procedure

Allegation

"There is a procedure in use, 2720A.3, verifying of the cathodic protection system which has not been reviewed by the Plant Operations Review Committee (PORC) and not approved by the Unit Superintendent. This is a violation of station administrative control procedures."

Discussion

The inspector interviewed the employee, other maintenance electricians, maintenance department managers, PMMS planners, and maintenance engineers. The inspector also reviewed the procedure folder in question which contained the unapproved procedure and witnessed performance of a portion of the cathodic protection procedure as well as one other procedure. The performance of the following preventive maintenance procedures and one surveillance test were witnessed by the inspector.

(1) 2701.J.43, Revision 8, EOF and Emergency Security Diesel (Weekly PM checks 1-8 section).

(2) EP1P 4606, Revision 1, EOF Emergency Diesel Generator Operability Test.

(3) MP 2720A3, Cathodic Protection System Inspection and Testing, Unapproved (no revision).

(4) Preventive Maintenance Form 2701 J-9, Cathodic Protection, Revision 4, (RBCCW section only).

Note: Items (1) and (2) were performed concurrently.

A selected sample of AWO's completed in the last two months was also reviewed. The employee produced a folder maintained in a file drawer in the Unit 2 electrical shop which was used to take readings to verify the adequacy of cathodic protection for various plant systems. This folder contained a copy of procedure MP 2720A3, Revision 0, which had no approvals, contained unapproved and unofficial data sheets, and a copy of 2701 J-9 which was the approved latest revision. Data in this folder went back as far as 1984. The employee stated that as far as he knew, this folder and the unapproved procedure it contained were the only one of its type in the shop. The inspector verified that virtually all maintenance procedures for Unit 2, even those that are not safety related require PORC review and Unit 2 superintendent's approval.

As a result of the above reviews, the inspector noted the following:

Procedure MP 2720A3 is unapproved. The revision in the folder was written in approximately 1980 and has remained there ever since. Numerous entries on data forms and AWO's indicated many electricians recognized that they were using an unapproved procedure. Yet no action was apparently ever taken by anyone to remove this procedure.

The employee was involved in the rewrite of this procedure. This process was started in March of 1988 and continues as of the dates of this inspection. Unit 2 management stated that low priority and a one time loss in the computer delayed issuance of the procedure. Management also stated that while the employee had brought to their attention the need for an approved procedure, they were not made aware that an unapproved procedure was in use.

There is a system in place to assure that maintenance personnel use a procedure and that it is the latest revision and in general, this system appears to work well. In this case the system failed.

The EOF diesel test and PM tests were done correctly using the latest revisions. The mechanic and operator performing the tests appeared to be knowledgeable on the use of the procedures. The electrician performing the cathodic protection procedure also appeared to be knowledgeable in this task. He obtained the proper 2701J form but could not locate MP 2720A3 which was referenced on the AWO. This was because since 2720A3 was not approved it was not a maintained procedure file. Although the electrician recognized that 2720A3 was not available, he made no attempt to questions this.

Non-safety related PM's are accomplished using a one part AWO (as opposed to 2 or 3 parts AWOs for safety related work). The inspector noted that in some cases, out of specification readings were obtained on cathodic protection checks. This data appeared to be unreviewed and there was no assurance that corrective actions would be taken. The PMMS planner stated that 2 and 3 part completed AWOs were reviewed by the planner to assure corrective actions; however, corrective actions for one part AWOs requires the maintenance worker or his foreman to notify the planner. There were indications that some non-safety PMs may not get identified. The PMMS planner stated that they had recognized this as a problem and had changed the system a week earlier to require all completed one part AWOs be reviewed by the PMMS planners.

Conclusion

The basic allegation that an unapproved procedure was in use in the electrical shop is substantiated. There is ample evidence that this procedure was available and in use by electricians for at least 8 years. There was evidence that numerous electricians recognized that they had an unapproved procedure, yet no prompt action was taken to correct the situation. Although an updated procedure was in progress, little action was being taken to get it issued. There appears to be a somewhat casual attitude toward procedures by some shop personnel. This was evidenced by the failure to take action on an unapproved procedure for 8 years and the failure of an electrician to be concerned about a procedure referenced on the AWO that he could not find. There was a casualness in the use of informal data sheets and data review for this procedure.

The licensee pointed out that this procedure was not safety related and had low safety significance. Performance of this procedure which involves only taking voltage readings should be within the skills of a properly trained electrician. The inspector concurs that the procedure is of low safety significance, and

that a properly approved 2701 J form and data sheet probably should suffice. However, once having decided to issue a procedure, the licensee was not responsive. Eighteen months to issue a relatively simple procedure was excessive even for a low priority procedure.

There was a more generic concern implied by the employee in this allegation and others concerning a casual attitude toward procedures by maintenance personnel. The inspector believes there is sufficient evidence to substantiate this allegation. See paragraph A.6.4 for further discussion regarding procedure adherence.

C.3.37 Electrical Metallic Tubing

Allegation

Contrary to the Standard Specification for Electrical Installations, SP-EE-076, Millstone Unit 2 uses electrical metallic tubing (EMT) for applications other than the allowed use for lighting installations.

Discussion

The inspector reviewed SP-EE-076 and found it to in fact state that "in nuclear generating stations, EMT shall only be used for lighting installations." Upon subsequent inspection of the Unit 2 Turbine and Auxiliary Buildings it was determined that EMT had been used for applications other than lighting installations.

When asked to provide the basis for these other uses of EMT, the licensee explained that they were all clearly called out in the Millstone Unit 2 design specification for raceway and conduit installation, Bechtel drawing 25203-34001. The inspector reviewed the specification from Bechtel, the Unit 2 architect and engineering firm, and found that pages 7,8,9,40,41 and 42 allow the use of EMT at Unit 2 and provide the formulae that ensure the EMT meets all requirements for seismic Class I equipment.

In addition, the inspector determined that SP-EE-076, as a specification, does not apply to Unit 2. It is a specification developed by Stone and Webster and used in the construction of Millstone Unit 3, the plant for which Stone and Webster was the architect and engineer. SP-EE-076 has been distributed to the other nuclear generating stations operated by the licensee as a reference and general guidance document. The inspector reviewed licensee internal memoranda that promulgated the use of SP-EE-076 at these plants, and no discrepancies were noted.

Conclusion

The allegation that EMT is used in applications other than lighting installations at Millstone Unit 2 is substantiated. These applications, however, are clearly allowed for and controlled by the applicable specification, Bechtel drawing 25203-34001, and, therefore, pose no safety hazard to the plant.

C.3.38 Spare Station Batteries

Allegation

Electricians have consistently noted problems with the spare station battery such as cracked cells, severe discoloration of cells, and material loosing from cell posts, with no action at all being taken by the licensee. The spare station battery cells are stored in the same room as the "A" station battery, and the employee was concerned with the fire hazard posed by the material condition of the spare battery cells and with the possibility that the performance of the station batteries would be adversely affected if the spare cells were installed.

Discussion

The spare station battery consists of six battery cells maintained on a continuous charge voltage and stored in the A station battery room. The inspector toured this room and specifically inspected the physical condition of the spare battery cells. The spare cells were found to be in good condition: the cells were clean, and all six had proper electrolyte level with no electrolyte discoloration observed. The one discrepancy noted was some corrosion product growth on the positive terminal of one of the cells. This problem had been previously identified by the licensee, and a "Problem Report Submitted" tag hung on the cell.

The licensee performs a monthly surveillance procedure on the spare station battery that inspects each cell's voltage, electrolyte level and specific gravity. The inspector reviewed the data sheets for these surveillances that had been performed over the previous six months. In all cases, the acceptance values for the individual inspections were met, and no abnormal conditions were identified by the licensee personnel who performed the work. During a subsequent inspection of the spare station battery, the inspector observed the performance of this monthly surveillence by licensee personnel. These personnel also performed the work order to clean the corrosion growth from the one affected cell. The battery surveillence was satisfactorily performed, and the "Problem Report Submitted" tag was cleared after the cell had been adequately cleaned. The inspector noted no deficiencies.

During the course of the spare battery inspection, an additional discrepancy was found that had not been identified by the employee. Licensee procedure ACP-QA-4.02B,"Receipt, Control and Identification of QA Material," requires that QA material stored outside of the warehouse (such as the spare battery cells) be red tagged. This red hold tag requires that the cells be inspected and approved before they are installed in either of the station batteries. Upon inspection, however, it was noted that only five of the six spare cells had a red tag attached. This discrepancy was addressed to the licensee Quality Services Department, and in the presence of the inspector, the licensee promptly verified that a tag had been issued for the cell. Subsequently, a new red hold tag was hung on the affected spare cell. In light of the fact that an original tag had been issued for the cell in question, the licensee could only speculate that the tag had fallen off the cell and been inadvertently discarded. The inspector had no further questions.

Conclusion

Based on first-hand inspection and review of licensee records for the time in question, the inspector concluded the spare station battery is, and has been, in satisfactory physical condition. This allegation is unsubstantiated.

C.3.39 Emergency Lighting Battery Acid Is Poured Down Drain In Violation With Company Procedures And Environmental Rules

Allegation

The employee, in this case, observed two instances where battery acid from cracked batteries was poured down the floor drains in the Condensate Polishing Facility. The employee believed this represented a violation of company procedures and environmental rules.

Discussion

Discussions with the Chemistry Supervisor of Station Services indicated that batteries that are cracked are not accepted by Stores Supervisor for disposal unless the acid has been drained from the batteries. The Chemistry Supervisor has the acid drained from the damaged battery into the floor drain that drains into the Condensate Polisher Regeneration Wastewater Neutralization Tank. Here the acid is neutralized.

The licensee holds a NPDES permit from the State of Connecticut Department of Environmental Protection that allows discharge from the Condensate Polisher Regineration Wastewater Neutralization Tank into the plant discharge in the amount of 25,000 gallons at a frequency of twice per day. The permit requires the sampling of the tank for pH weekly and the discharge is subject to 40 CFR Parts 125 and 423 of the effluent guidelines and standards.

Conclusion

The allegation that battery acid was disposed of through floor drains is substantiated. However, the disposal of battery acid from cracked batteries is in accordance with established procedures and environmental regulations.

C.3.40

Many preventive maintenance procedure forms which are known as the 2701J series are either outdated and/or incorrect. In many instances the wrong revisions were in place. Each allegation is discussed below separately as C.3.40.1 and C.3.40.2 since they represent somewhat different issues.

C.3.40.1 2701J Series Forms

Allegation

This allegation stated that there were many inadequacies in several of the 2701J Series Forms, the forms which setforth the requirements of the licensee

EQ Planned Maintenance (PM) system for specific plant components and systems. The inspector addressed these concerns on a form-by-form basis, and the results are individually discussed below.

Discussion

1) FORM 2701J-1: a) Refuel Item 3 of this form requires visual inspection of the trip circuit breaker (TCB) arc quenchers. A deficiency involving the spacing of the arc quenchers in the TCBs had been identified and discussed by the licensee, the NRC and the circuit breaker vendor (reference C.3.41.2). The employee questioned whether the PM item had been accepted as satisfactory in light of the known deficiency. The inspector reviewed the completed work orders that accomplished the most recent refueling inspection of the nine TCBs and found that in all cases the visual inspection of the arc quenchers had been accepted as satisfactory. For the arc quencher inspection to be found satisfactory, the 2701J-1 Form requires that no evidence of arcing be present and that the arc quencher not be broken. The spacing problem involved small fractions of an inch and is not readily identifiable with the breaker in its cabinet (the problem was originally discovered by a factory technical representative with the breaker removed from its cabinet and setting on a workbench for other work). In discussions with licensee engineers and NRC inspectors who have investigated this problem separately, the inspector learned that the potential spacing problem of the arc quenchers has been determined to not be safety significant (for further details on the potential problem see the discussion of allegation C.3.41.2). Due to the lack of safety signifigance and the amount of detail needed for identification of this problem, the inspector determined that the satisfactory evaluation of the TCBs using the visual inspection per Form 2701J-1 was acceptable.

b) Refuel Item 14 of the form requires the use of a 1000 Vdc megohmmeter. The employee stated that Unit 2 does not own a 1000 Vdc megohmmeter and substitutes an uncalibrated 5000 Vdc megohmmeter to accomplish this step on the procedure. The inspector visited the licensee Maintenance Department tool crib and found that the licensee does not possess any 1000 Vdc megohmmeters and that the 5000 Vdc megohmmeter was in the Metrology Lab. Subsequently, the inspector found and inspected the 5000 Vdc megohmmeter and determined it to have a valid calibration sticker attached. The 5000 volt range of the megohmmeter is adjustable, and the megohmmeter could indeed be used as a calibrated 1000 Vdc megohmmeter. The resistance scale of the megohmmeter was not fully calibrated at the high end due to the lack of a test procedure to calibrate the very high end of the scale. The resistance scale was calibrated well past the range required for the preventive maintenance and was fully capable of satisfying the requirements of 2701J-1 and the equipment substitution is well within the skills of the craft and consistent with substitutions permitted by other procedures. Therefore, the allegation that QA equipment was not being properly tested is unsubstantiated.

2) FORM 2701J-2: The items required to be done every 6th refueling call for replacement of certain capacitors. The employee stated that Unit 2 Engineering had changed the type of capacitors to be installed and questioned whether a Plant Design Change Request (PDCR) existed to document this change. The Engineering Department provided copies of PDCR 2-83-86, PDCR 2-13-85 and PDCRE MP2-87-084. These PDCRs evaluated and documented all capacitor changes brought into question by the employee. The allegation concerning the lack of PDCRs for these changes is unsubstantiated.

3) FORM 2701J-3: This is a preventive maintenance inspection of 4160 and 6900 volt motors. The employee stated that this Form does not require a one minute insulation resistance test or a polarization index test for motors in storage, such as the spare Reactor Building Component Cooling Water (RBCCW) and Service Water (SW) pump motors, which is a violation of specification SP-EE-076. The inspector reviewed this Form and determined that it requires these tests only of installed motors. Licensee procedures EN2-1199A, "Inspection and Surveillance Procedure for Millstone Unit 1&2 Appendix "R" Fire Cage," and Maintenance Form 2701J-74,"Spare 4.16 kV Horizontal and Vertical Motor Checks," do provide for inspection and maintenance checks of these spare motors, including the one minute insulation resistance check. Specification SP-EE-076 is a Millstone Unit 3 specification although it is being made applicable to Unit 2. The inspector determined the inspections of the spare RBCCW and SW pump motors per 2701.3 to be adequate, and the allegation that SP-EE-076 has been violated is unsubstantiated.

4) FORM 2701J-6: a) The employee questioned why the acceptance value for the megohmmeter check of the fan motor was "greater than or equal to 1.5 megohm," while the acceptance value for other similar motors was only "greater than or equal to 1 megohm." When questioned , the licensee's Engineering staff replied that the difference between thes values is not significant in a test of this kind; either value is satisfactory, and encountered test results are normally much higher than 1 or 1.5 megohm. The licensee stated that from an administrative point of view, one consistent acceptance value for these tests would be desirable, but the current discrepancy in the values is not safety significant. The inspector concurred with the licensee assessment and had no further questions. As this is a question and not an allegation, this issue is closed.

b) The alleger stated that the one minute insulation resistance inspection and the polarization index inspection of the fan motor need clarification in light of the same inspections described and required by specification SP-EE-076. This Form requires these inspections to be performed per licensee procedure MP2720Q, "Insulation Resistance Testing (EQ)." The inspector reviewed MP2720Q and determined the directions for the one minute insulation resistance test and the polarization index test to be clear and straight forward. As previously stated, SP-EE-076 is not a required specification for Unit 2, and 2701J-6 is not required to meet this specification. Therefore, the allegation that this form needs clarification or somehow violates SP-EE-076 is unsubstantiated.

5) FORM 2701J-7: a) Inspection Item 4 of this form calls for inspection of melamine torque switches and limit switch rotors in motor operated valves for "color." The directions for this inspection describe the color of these switches and rotors in order to aid in their identification. The acceptance value for this item, however, is "No cracks." The alleger was concerned if the color description in the inspection was still valid. When asked, the licensee responded that the color description was still valid. However, the rotors and switches were meant to be inspected for "cracks," and the instruction to inspect for "color" was a typographical error. The licensee corrected the error, and the inspector verified the correction before leaving the site. This allegation concerning the color inspection of motor operated valve torque switches and switch rotors was substantiated but was caused by a minor typographical error which has now been corrected.

b) The employee questioned the acceptance value of "greater than or equal to 1 megohm" for an insulation resistance check. The licensee response and inspector review of the same is discussed above under FORM 2701J-6(a). This issue is closed.

c) Inspection Item 14 of this form requires inspection of the motor operated valve for "any twisted or broken members and for evidence of unusual or extraordinary movement of the assembly." The acceptance value for the inspection reads "All members straight. No evidence of any unusual movement." The employee was concerned that there is no equipment specified to positively check this item, nor are there any specific tolerances set forth in the acceptance value.

Item 14 is a visual inspection intended to check motor operated valves for any gross physical problems, and the training and experience of the electrician performing the inspection are relied upon in determining whether the acceptance values have been met. In addition to this preventive maintenance inspection, the licensee conducts programmatic testing of motor operated valves with MOVATS (Motor Operated Valve Assessment and Testing System), VOTES (Valve Operation Testing and Evaluation System) and stroke time surveillance testing. The inspector reviewed these additional programs and was satisfied with their ability to identify more subtle problems with motor operated valves. The inspection required by, and the acceptance values of, Item 14 adequately fulfill the intended purpose of this preventive maintenance Form; hence the allegation the acceptance values are unclear or are too unspecific is unsubstantiated.

6) FORM 2701J-8: a) The employee's first concern with this Form again centered on the adequacy of an acceptance value of "greater than or equal to 1 megohm" for a megohmmeter check of a motor. For the same reasons discussed under FORM 2701J-6(a) this concern is not germane.

b) While not specifically related to this Form, the employee claimed that surge and hypot testers were now being used by maintenance personnel on all motor preventive maintenance tests. In addition, the employee asserted that the use of these testers was not part of an approved procedure and that the testers were not QA tested. The inspector visited the Maintenance

Department tool crib in order to examine the surge and hypot testers but was informed by the custodian that the Maintenance Department does not possess any of these testers. The inspector could not find any evidence that Unit 2 Maintenance Department personnel were using these testers but did determine that the Production Test Department uses them in the performance of licensee procedures PT 1405,21405 and 31405. It was subsequently determined that the surge and hypot testers are on the licensee QA equipment list. The allegation that these testers are being improperly used is unsubstantiated.

7) FORM 2701J-9: This Form provides for the inspection of the cathodic protection systems used on various systems and components, among which are the Main Condenser Water Boxes and the Turbine Building Component Cooling Water (TBCCW) system. The Main Condenser Water Box protection system had been replaced with a different system two outages ago, but the employee stated that this Form did not reflect the change. Also, during the same outage the TBCCW protection system was removed, yet it is still included on this Form. The inspector investigated the alleger's assertions and found the facts of the assertions to be true. The performance of the preventive maintenance on cathodic protection systems, however, was not adversely affected. Both the Main Condenser Water Box and the TBCCW were deleted from the Production Maintenance Management System (PMMS), which schedules the performance of preventive maintenance. The deletion of these two systems from regularly scheduled preventive maintenance prevented any confusion which might have arisen had this maintenance been attempted with an incorrect form. A new preventive maintenance inspection had been developed and implemented for the Main Condenser Water Box by the licensee Engineering Department. The inspector reviewed the records for these inspections that had been performed over the past two years and found them satisfactory. The preventive maintenance inspection plan for the Main Condenser Water Box cathodic protection system has been finalized and is in the process of being turned back over to the licensee Maintenance Department, with the new revision of 2701J-9 awaiting Plant Operations Review Committee approval. The licensee had opted to keep the old 2701J-9 Form intact until the new revision was ready, only to avoid repetitive revisions of the same Form. Any potential problems were avoided by the deletion of affected systems from PMMS. The new revision has incorporated the new parameters for the Main Condenser Water Box system and has deleted the TBCCW system. The inspector detected no deficiencies in the licensee handling of the cathodic protection system revision. The allegation that 2701J-9 Form needed revision was substantiated, but the licensee compensatory actions adequately prevented any problems from occuring with the affected systems.

8) FORM 2701J-10: Item 5 of this form inspects 480 volt motors/DC motors and states, "Check brush length (DC only)." The acceptance value for the item is "1/2 original length." The alleger's concern was that in many cases it is impossible to determine what one-half of the original brush length is. The inspector discussed this issue with other electricians and supervisory personnel of the Maintenance Department, and the consensus was that making this acceptance value determination was within the skills of the craft. The electricians cited their experience and training, as well as the avail-

ability of reference documents, as resources that enabled them to make an adequate judgement of acceptable brush length. The inspector concurred that this acceptance value determination was within the scope and skills of qualified electricians and that, while more specific acceptance values could be given, no regulatory requirements had been violated. The allegation that it is impossible to determine one-half original brush length is unsubstantiated.

9) FORM 2701J-11: This Form is the preventive maintenance procedure for 480 volt contactors, and Item 2 states, "Inspect contacts." The acceptance value for this item is "Proper contact." The employee again questioned what was meant by this acceptance value and why a specific value was not spelled out.

This is a qualitative rather than a quantitative inspection and relies on the judgement of the electrician doing the inspection. In discussions with the inspector, licensee electricians stated they felt their training and experience allowed them to determine if proper contact existed without further acceptance criteria being specified. This acceptance value is a subjective judgement that falls within the skill of the craft, and licensee management admitted their reliance on the electrician's skill to successfully accomplish this inspection. The inspector concluded more specific acceptance values could be delineated but were not necessary, and the allegation is therefore unsubstantiated.

10) FORM 2701J-12: a-e) The first five concerns with this Form dealt with what the employee thought was the vagueness of certain acceptance values. The employee questioned what was meant by acceptance values such as "satisfactory", "proper air gap", "proper resistance", "normal operation" and "1/2 original length." These allegations are similar, if not identical, to allegations discussed under FORMS 2701J-10 and 2701J-11, and therefore are unsubstantiated based on the reasons given previously.

f) The sixth concern with this Form questioned why the insulation resistance check for the diesel generator has an acceptance value of "greater than or equal to 6 megohm" when other similar equipment requires only greater than or equal to 1 megohm. The alleger also felt a discrepancy existed when the megger check required by this Form is compared to the megger checks required by specification SP-EE-076. These are the same type of concerns discussed above for Form 2701J-6, and for the same reasons, this allegation was determined to be unsubstantiated.

11. FORM 2701J-13: The employee was again concerned with acceptance values such as "normal operation" and "no signs of overheating or excessive grooving." The employee stated he would like to have more explicit criteria spelled out. As explained in previous discussions, these acceptance values require a judgement to be made by the electrician, a judgement that falls within the skill of the craft. Within the industry, this is considered to be within the knowledge base of a journeyman electrician. The current acceptance values violate no regulatory requirement and pose no threat to safety, and this allegation is unsubstantiated.

12. FORM 2701J-27: This Form delineates the preventive maintenance inspections for instrument air compressors. The employee was concerned that this Form does not adequately reflect the installation of the new 'C' air compressor with its more sophisticated control circuitry. The inspector determined that this Form can not be properly used to inspect the 'C' air compressor. However, the inspector additionally determined that the licensee has an entirely separate Form (2701J-69) that was developed specifically for the 'C' instrument air compressor. The inspector reviewed the 2701J-69 Form and concluded it was adequate. The allegation that there is not an adequate 2701J Form for the 'C' instrument air compressor is unsubstantiated.

Conclusions

Some of the allegations described above were substantiated. Those that were substantiated were found to be minor in nature and of low safety significance. ANSI 18.7-1976, Administrative Controls and Quality Assurance for the Operation Phase of Nuclear Power Plants provides the basic regulatory requirements for maintenance at nuclear power plants, and it states in part "... skills normally possessed by qualified maintenance personnel may not require detailed step-by-step delineations in a written procedure...". Many of the procedures listed above provide only overall guidance and depend on the skill of the craft for determining acceptability. For those electricians or mechanics with less than journeyman skills who have difficulty dealing with non-specific acceptance criteria may seek help from their fellow tradesman or foreman. In addition, mechanisms are available for revising 2701J forms to make them clearer and these are available to all shop personnel.

C.3.40.2 Outdated 2701 J Forms

Allegation

This allegation stated that many of 2701J forms are outdated and the wrong revisions are in place.

Discussion

There are 73 active 2701J forms which are used to perform preventive maintenance on both safety related and non-safety related equipment. Controlled copies of 2701J forms are maintained in files in the Unit 2 Maintenance Department office along with other maintenance procedures. Shop personnel are to use copies of procedures maintained in these files when procedures or 2701J forms are referenced by the AWO. This will assure the latest revision of a procedure is available to the mechanics or electricians.

The inspectors discussed the 2701J forms with the alleger, maintenance engineers, other electricians, maintenance department, supervision, and electrical engineering. The maintenance procedure file including 2701J forms was sampled to determine if procedures and 2701J forms were the latest revision and latest change. The inspector also witnessed performance of portions of 2701J-9, "Cathodic Protection", and 2701J-43, "EOF and Emergency Security

Diesel" which is further detailed in discussion of allegation C.3.34. Also reviewed was procedure MP 2701J, "Planned Maintenance (EQ)", Revision 7 which describes the planned maintenance portion of the preventive maintenance program.

The review of the maintenance files indicated that all maintenance procedures and 2701J forms were the latest revision. Using a large sample, the inspector found no out of date procedures. Up to date procedures and 2701J forms were in use for the two preventive maintenance procedures witnessed by the inspector. Mechanics and electricians interviewed by the inspector seemed to be aware of the maintenance procedure file and were using them. Two problems were observed in the use of procedures and these are discussed in Section C.3.34.

Conclusion

2701J forms and other maintenance procedures reviewed by the inspector were up to date. The system in the Maintenance Department for obtaining procedures, if used properly, appears to assure that the latest revisions to procedures will be available to maintenance personnel. Therefore, the allegation that 2701J were outdated and wrong revisions were in place for 2701J forms is unsubstantiated.

C.3.41.1, C.6 and A.11.5 Reactor Trip Circuit Breakers (RTCB) Reset

Allegation

The alleger stated that for 5 years, TCB-7, one of the reactor trip breakers (RTB) never functioned properly in that the remote reset did not work. It required manual closing of its contacts during high risk testing. Both I&C and electrical technicians had brought this issue up, but it was never resolved. This issue affects all 9 RTBs.

The pickup coils of these breakers were calibrated to a specific ambient temperature. Because the switchgear room temperature fluctuates so much between summer and winter, the employee was concerned that the RTBs may not open when needed.

Discussion

The 9 reactor trip breakers TCB-1 through TCB-9 are arranged as shown in Figure C.3.41. TCB-9 is a tie breaker, it does not perform a safety function. The safety function of a RTB is to open its contact on receipt of a reactor trip signal, thus interrupting the power supply to the control element drive mechanism (CEDM). This allows the control elements to drop into the reactor core, causing a reactor trip.

The circuit breakers are arranged in series such that if a breaker fails to trip the reactor when needed, the second can still trip the reactor. In addition, each breaker has two trip coils, an undervoltage (UV) trip coil and a shunt trip coil, to open the breaker contacts. When a reactor trip signal is received, the UV trip coil de-energizes to allow the contacts to open by spring

force stored in the breaker mechanism, in addition the shunt trip coil is energized to pull the contacts to the open position. These two trip coils work independently. Since "to-open" is the safety action, licensees are required to make every effort to assure the RTB will open when required.

In order to be conservative, the UV coil is calibrated at 106 VDC and at an ambient temperature of 68-77°F. An increase in temperature in the circuit breaker compartment will make the UV coil easier to trip, thus allowing the breaker contacts to open. During normal operation, the UV coil is continuously energized. This, plus electrical current through the contacts and cables, makes the circuit breaker compartment warmer than the switchgear room ambient. Even during the winter time, when the plant is operating the temperature of the circuit breaker compartment will not be lower than the setting temperature, i.e., 68-77°F. This assures that the UV coil will trip when required.

The inspector reviewed two high risk test reports, one dated April 20, 1989, and one dated April 28, 1989. In each of the tests, the 8 circuit breakers (TCB-1 through TCB-8) are required to open 6 times because of the matrix test requirement. The test results were tabulated on pages 14 and 15 of the test report, which indicated all 8 RTB's functioned properly.

As for the alleger's concern that the circuit breaker cannot be closed remotely from the control room during the high risk test, the licensee provided the following explanation. As mentioned above, the RTB's are calibrated conservatively to the "open" position. During the high risk test, the UV coil has been continuously energized before the test and the circuit breaker compartment does not have enough time to cool down. When the UV coil is re-energized, it does not have enough force to pull the mechanism to the closed position, and it normally requires an electrician to close it manually. Recently the licensee revised the test procedure to eliminate the "remote reset" step, such that all circuit breaker closures are done manually. The inability to close the RTB circuit breakers is not a safety issue.

Conclusion

The allegation that the reactor trip circuit breaker remote reset feature does not work is substantiated. The allegation that the reactor trip circuit breakers may not open when needed because of the inability to close them remotely is unsubstantiated.

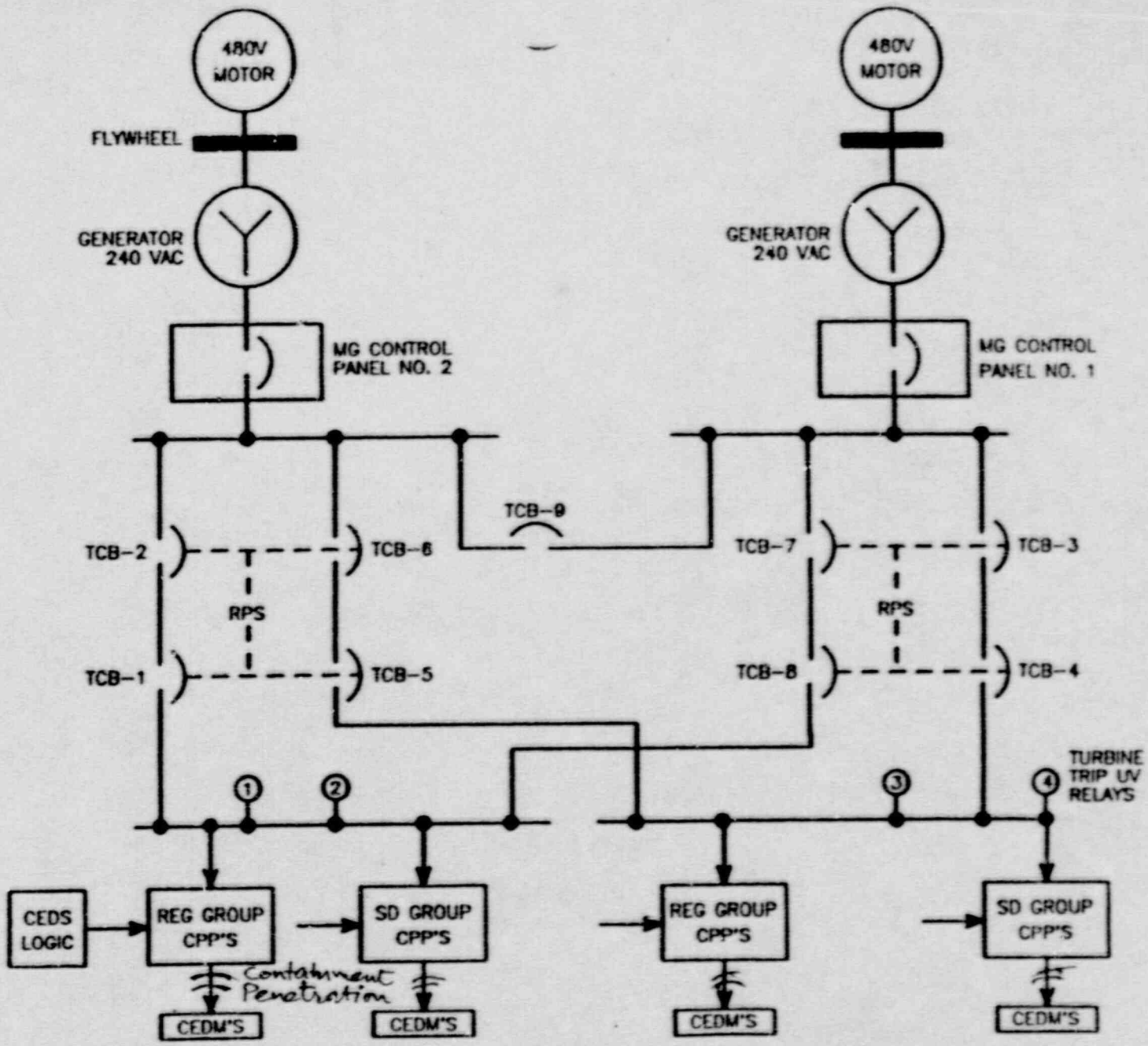

REACTOR TRIP SWITCHGEAR ONE-LINE DIAGRAM

Figure C.3.41

C.3.41.2 Reactor Trip Circuit Breakers (RTCB) Arc Chutes

Allegation

The employee stated that the General Electric (GE) representative told him that every single reactor trip breaker presently installed in Unit 2 has the wrong arc chute installed. If any of the reactor trip switch gear breakers are ever called upon to function at their design limits, they will all fail to trip the reactor.

Discussion

The safety issue of this allegation had been previously evaluated by the team leader of this inspection and the licensee's management immediately following the testimony. Because of the safety implications, this issue was processed immediately rather than awaiting the teams arrival onsite. They contacted the GE representative who identified the arc chute problem, and discussed this with the licensee's electrical engineering personnel. It was established that there was no immediate safety concern. During this inspection, the GE representative was contacted by the NRC inspector on July 19, 1989. He stated that based on his observation, the arc chutes of the reactor trip breaker (RTB) do not fit properly with the contours of the breaker housing. He recommended to the licensee that they consider replacing them.

The inspector reviewed the licensee's actions following being verbally informed by the GE representative of the arc chute problem. The licensee's electrical engineers reviewed their notebooks and generated a memorandum. The notebooks indicated that after they were informed of the problem, they discussed the issue among themselves and with the maintenance engineer to resolve this problem. The electrical engineer and his supervisor carefully examined the arc chute condition and compared this with the drawings and description of the technical manual. They determined the gap between the arc chutes and the housing is about 1/8 inch. They concluded that the gap was a result of manufacturing tolerances rather than of improper arc chutes. One of the memoranda from the licensee indicated that they had implemented a plan to have the circuit breakers in question sent to GE for rework in the near future.

According to the licensee, these circuit breakers were purchased from Combustion Engineering, the NSSS vendor for Millstone 2, who procured them from GE. The licensee performed a safety evaluation regarding the arc chute issue and determined that each of these circuit breakers (GE AK 2-25 RTSS breakers) has a 600 ampere frame with an overcurrent trip device setting of 600 instantaneous amperes. This trip value is selected to assure the current rating of the breaker is not exceeded rather than act as a fault interrupting setpoint for protective coordination. The normal load (current drawn by the control element drive mechanism) to be interrupted is only 140 amperes, at 240 Vac. The arc chute is designed to interrupt a fault current of 42,000 amperes at 240 Vac. Therefore, sufficient design margin exists to interrupt a normal current of 140 amperes even if the arch chute is not operating properly. In addition, the subject RTBs have been in service over the last cycle and have performed their function properly with no indication of arcing or flaming in the area of the arc chutes.

The arrangement of the RTBs is shown in Figure C.3.41. On a fault condition downstream of the circuit breaker but upstream of the regulating and shutdown group control power panels, the MG set control panel breaker will limit the maximum output current to less than 450 amperes. On a fault condition at the containment penetrations, the individual drive mechanism breaker will limit maximum current to each group to 10 amperes, thus eliminating the possibility of burning the containment penetration.

Conclusion

The general allegation that there are problems associated with arc chutes on the GE reactor trip breakers is true. However, the specific allegation that the wrong arc chutes are installed in not correct. Further, this would only affect the breaker's ability to interrupt full design rated fault current which can not be achieved in this application.

C.3.42 Panel Drawing Errors

Allegation

On December 30, 1988 it was alleged that "many inplant electrical panels do not agree with existing prints." It was also alleged that some lighting panels supply vital loads; that errors in the wiring diagrams for the machine shop, office building and maintenance buildings present a danger to the public health and safety because nuclear safety related equipment is involved, and listings of circuits for distribution panels that are kept in the control room are in error.

The employee also suggested that the licensee would claim a blanket exemption to the National Electric Code and that the licensee is violating SP-EE-076.

Discussion

When approached by the staff on these issues, the licensee did not claim an exemption to the National Electric Code for the non-generation facilities cited in the allegation. What the licensee denied is that SP-EE-076 is applicable to Unit 2. (See allegation C.3.33 "Improper Grounding of Instrument Air Compressor" for an evaluation of the applicability of SP-EE-076 to Unit 2.) The licensee also denied that errors in cataloging loads on distribution panels in these facilities has any affect on the health and safety of the public in that no safety loads are supplied from these panels (nuclear safety versus industrial safety) or that such cataloging was a regulatory requirement. Furthermore, the licensee denied any violation of General Design Criterion 19 (which requires all safety actions to be accomplished from the control room).

The staff's investigation of these matters did not identify any nuclear safety loads that were not properly listed or any load required for the protection of the public health and safety that had to be operated from outside of the control room (other than those loads which must be so operated to bring the plant to a safe shutdown in the event that the control room must be abandoned). We also noted that the licensee was engaged in preparing as-built drawings for the recently completed maintenance facility and that an error in the identification of a telephone light circuit was being corrected.

Fire fighting procedures and ground fault isolation procedures (see C.3.15 "Panel C26/RPS Ground" for a discussion of ground fault procedures) require that certain loads be removed. Errors in the listing of these loads in OP2388 (a copy of which is kept in the control room) will make these procedures more difficult and time consuming to execute. However, it must be clearly understood that these procedures do not involve operation of emergency core cooling or reactor trip systems or their supporting systems to initiate protective action. However some of these systems may be initiated due to their "fail safe" design if they lose electric power.

Conclusion

It was substantiated that there were some errors in drawings for electrical panels and the drawings did not always reflect as-built conditions. These errors are in the process of being corrected. However, it was not substantiated that these errors involved nuclear safety related equipment and that there was a danger to public health and safety. It was also not substantiated that the licensee claims blanket exemption to the National Electrical Code. Violation of SP-EE-076 is not substantiated since this standard is not applicable to Unit 2.

C.6 Reactor Trip Circuit Breakers (related to C.3.41)

On April 14, 1989, the employee issued a memorandum to the NRC Resident Inspector, stating that he overheard a conversation between an electrician and his foreman. The electrician stated that 7 out of the 8 RTCB failed the high risk testing. The employee later explained that when he said the breakers failed he meant that the breakers could not be closed remotely.

Discussion

The employee's concern as stated in the April 14, 1989 memorandum had been fully addressed by the Resident Inspector in NRC Report No. 50-336/89-09. Section 6.0 of that report listed and discussed the maintenance history of each RTB from January 1, 1987 through April 19, 1989.

The fact that the RTB's cannot be closed remotely is not a safety issue. The details are discussed in allegation C.3.41.1.

Conclusion

Although the employee's statement is true that the RTBs could not be closed remotely during the high risk test, this is not considered a safety issue.

C.8 Improper Installation of "Blue Tags"

Allegation

Two different blue tags were issued by two different jobs to be placed on two different components in the same system. This is a violation of tagging procedures, a violation of tagging policy, and a potential safety problem.

Discussion

During the inspection, one of the allegers notified the inspector of a new concern not previously identified to the NRC. He stated that he was authorized to place a blue tag to do maintenance on a sewage discharge pump switch when he discovered a blue tag had already been placed on the pump breaker for work which was being done by Station Services Department maintenance. He considered this to be a violation of tagging rules and a potential safety concern to electricians. A blue tag is one which allows only the person who signed for the tag to operate the tagged component. This allows the component to operate while performing certain maintenance without constantly installing and removing tags.

The tagout in question concerned a sewage discharge pump which is outside the scope of NRC regulatory authority. However, the tagging system in question is used station wide for all equipment including safety related equipment. For this reason, the safety issue relative to this allegation was reviewed by the inspector. The inspector discussed this allegation with the alleger, a shift supervisor, and senior management of the Unit 2 Operations Department. The inspector also reviewed ACP-QA-206A, Station Tagging, Revision 14.

Electricians for Unit 2 maintenance were assigned to perform maintenance on sewage pumps per AWO U2-89-7621. They were authorized to hang blue tags on the pump switches. During the process, the electricians found blue tags already installed on the sewage pump breakers in a different location which were for AWO U2-89-6982. This job was being worked by Station Services. However, the electricians stopped the job until the situation could be resolved. Upon review of the circumstances, the inspector determined the following:

(1) ACP-QA-2.06A, Section 6.1.17, states in part, "A tag of no other color may be attached to a switch or device bearing a blue tag, and only one blue tag may be attached to one switch or device at one time, thereby permitting clearance to only one person". Hanging blue tags on separate devices in the same system or circuit is not specifically prohibited but it does not make sense to do so as concurrent jobs could interfere with each other.

(2) Shop personnel performing the work must sign on to the tagout verifying its adequacy. This is a backup to operations hanging the tag. Although the originally installed blue tag was hung at a different location, it was noticed by the electricians who stopped the job. The backup system appears to have worked.

(3) Two different departments, Station Services and Unit 2 maintenance were authorized to work on the same component. This conflict was not identified by the shop PMMS planners nor by operations personnel prior to authorizing the Unit 2 work. This was caused by the fact that (1) although there are meetings among Unit 2 departments to coordinate work, there is apparently little coordination with Station Services which does work at all three units; (2) the PMMS AWO system is not equipped to

readily identify this kind of conflict; and (3) Operations personnel do not review other tagouts before authorizing new tagouts. They depend on persons hanging the tags to notify them of conflicts. In this case the "conflicting" tags were on different components and not picked up by operations personnel.

(4) There does not appear to be a formal policy not to hang blue tags on different components in the same system or circuit. However, Operations personnel stated that this should not be deliberately done (particularly for adjacent components) as it does not make sense.

(5) The alleger felt strongly that this was a potential industrial safety issue since an electrician may receive an electrical shock by mis-operation of another component in the system. The inspector's evaluation was that the probability of shock from an internal power source was low, since blue tags create situations where you can expect power. The most that could happen is that power has been shut off by opening of a circuit breaker further upstream. However, the application of external sources of voltage such as a resistance check would present a problem if work is not coordinated.

The inspector discussed the above issue with Unit 2 Operations Department management. They noted that ACP-QA-2.6A is a station procedure and any changes made to it would require the agreement of all three Units. Unit 2 agreed to evaluate the following issues and bring any proposed resolutions to station management:

(1) Determine if there are any potential safety problems in hanging blue tags on different components in the same system or circuit if they are signed out to different individuals or jobs.

(2) Determine if ACP-QA-2.06A needs to be changed to prohibit more than one blue tag on different components in the same system if these blue tags are assigned to different jobs or different individuals. It appears to be acceptable to have two blue tags on different components if they are signed out to the same individual for the same job if that individual wants that extra degree of control.

(3) Evaluate whether or not there needs to be a mechanism in place to attempt to resolve conflicting tagouts before the tags are hung.

Items (1), (2), and (3) above are collectively considered an unresolved item pending resolution by the licensee and further NRC review (50-336/89-13-12).

Conclusion

This allegation is partially substantiated in that blue tags for different jobs were authorized to hang on different components in the same system and that there is no positive mechanism for identifying this conflict prior to hanging the tags. It was unsubstantiated that this was a violation of company rules as ACP-QA-2.06A does not prohibit the alleged actions. While some licensee

representatives concurred that it did not make sense to hang blue tags on different components in the same system there was no formal policy prohibiting it. It also could not be substantiated there is a significant safety issue. As noted above, there is sufficient questions raised by the alleger that this should be resolved by licensee management.

APPENDIX "A"

EXIT INTERVIEW ATTENDEES
MILLSTONE UNIT 2
JULY 21, 1989

The below listed personnel attended the exit interview held by the NRC on July 21, 1989. Other licensee personnel were contacted during the inspection as the activities interface with their area.

T. Arnett, Unit 2 I&C Engineer
R. Bates, Unit 2 Engineering
J. Becker, Unit 2 Acting I&C Supervisor
S. Brinkman, Unit 2 Operations Engineer
C. Clement, Unit 3 Superintendent
P. Collett, Unit 2 Maintenance
R. Crandall, NUSCO Radiation Assessment
F. Dacimo, Unit 2 Engineering Supervisor
W. Hutchins, Lead Licensing Engineer, Unit 2
T. Itteilag, Unit 2 Chemistry
J. Keenan, Unit 2 Superintendent
J. Laine, Unit 2 Radiation Protection Supervisor
R. Laudenat, Assistant to the Station Superintendent
E. Mroczka, Senior Vice President, Nuclear Engineering and Operatins
J. Riley, Unit 2 Maintenance Supervisor
S. Scace, Millstone Station Superintendent
J. Smith, Unit 2 Operations Supervisor
J. Stetz, Unit 1 Superintendent

ENCLOSURE 1

RESUME OF LEONARD CHEUNG

M.S. in Mechanical Engineering (Kansas State University, majoring in Control System); graduate study in advanced Electrical Engineering courses (Northeastern University 1969-1971) after M.S. degree; B.S. in Mechanical Engineering; registered Professional Engineer in California and Massachusetts; Senior member of Instrument Society of America; Member of American Society of Mechanical Engineer.

17 years experience in nuclear power plant design, construction and operation, including 5 1/2 years with the NRC, 4 years with Consulting Engineers (Quadrex Corporation), 2 1/2 years with NSSS vendor (Combustion Engineering) and 5 years with Architect Engineers (Bechtel Power Corporation and Stone & Webster Engineering Corporation).

RESUME OF RAYMOND FRANCIS SCHOLL JR.

A graduate from Rensselaer Polytechnic Institute (RPI) in 1962 with a Bachelor's in Electrical Engineering specializing in logic design. A Senior Member of the Institute of Electrical and Electronics Engineers (1543404) and a Registered Professional Engineer (MASS 21773). After graduation from RPI, he served as Electrical Officer on the USS Joseph P. Kennedy Jr. and then accepted a position with the Naval Nuclear Power Unit (NNPU). At NNPU he made as-built drawings of the instrumentation and control systems (I&C) of the PM-3A Nuclear Power Plant in Antarctica and spent eight years as the Senior Systems Analyst.

In November 1973, he joined the Electrical, Instrumentation and Controls Branch (EICSB) of the Atomic Energy Commission as a Senior Reactor Engineer. In that position he was responsible for the Construction Permit review of the Clinton, Jamesport, Perkins and Cherokee Stations; the Operating License Reviews of the Zimmer, LaSalle County, Washington Nuclear Unit 2, and Watts Bar Stations; and the safety review of Naval Reactor Prototypes MARF and S8G at the Kesselring Site.

In 1979 he was transferred to the Systematic Evaluation Program where he reviewed the designs of the 11 oldest nuclear power plants against current licensing criteria. In May 1984, he transferred to the Operating Reactors Assessment Staff where he participated in the review of events at operating plants. In October 1988 he was appointed Safety Information Management System Coordinator for the Office of Nuclear Reactor Regulation (NRR).

In addition to his normal assignments, he has served on the Augmented Inspection Team for the LaSalle County Static-O-Ring problem; participated in the restoration of Browns Ferry and recovery of TMI-2; helped write Regulatory Guide 1.118 and 10CFR50 Appendix R, and participated in special inspections for the Davis-Besse switchyard problem.

He is certified for membership on the Incident Investigation Teams and served 9 months as Enforcement Coordinator for NRR.

RESUME OF STEPHEN T. BARR:

Stephen Barr graduated in 1982 from the United States Naval Academy with a B.S. degree in Aerospace/Mechanical Engineering and finished in the top 5% of his class. After being selected for the naval nuclear power program, he attended Naval Nuclear Power School and subequently qualified as an Engineering Watch Officer at the General Electric S8G naval nuclear power plant prototype. Mr. Barr graduated first in his class from the Submarine Officer Basic Course and reported for duty with the new-construction crew of the USS Augusta (SSN 710). Named the ship's Electrical Officer, he supervised the installation, test and operation of the electrical power generating and distribution equipment on board the submarine. Mr. Barr additionally qualified as an Engineering Watch Officer on the ship's S6G nuclear power plant. After leaving the Naval sevice, Mr. Barr was employed for three years as a mechanical design engineer by Boeing Helicopter Company, working primarily on the design and test of the Osprey Tilt-rotor flight control system.

Mr. Barr has been with the NRC for a little over a year, serving as a reactor engineer in the Division of Reactor Projects.

RESUME OF NORMAN J. BLUMBERG

Graduated from the University of Maryland with B.S. in Chemical Engineering in June 1962. Served 4 1/2 years in U.S. Air Force as a nuclear weapons officer. Assigned to the Defense Nuclear Agency for 2 1/2 years. Assignments included weapon technical manual evaluations, instrument calibrations, weapons maintenance, quality control inspector, and worldwide inspector general inspections.

1967-1978 Nuclear Engineer at Norfolk Naval Shipyard. Qualified Shift Test Engineer (STE) on S5W and S3W submarine nuclear propulsion plants. Performed shipboard tests, wrote nuclear test procedures, and set nuclear plant conditions for overhauls. Additional assignments included writing and revising shipyard nuclear instructions, nuclear quality assurance, and the performance of audits.

1978-1987, Reactor Inspector for the USNRC. 1987 to present, Chief of the Operational Programs Section. Performed inspections at operating power reactors located in USNRC Region I. NRC inspector qualification on both BWR and PWR plants. Inspection areas have included nuclear maintenance, surveillance testing, instrument calibrations, refuelings, startup testing, and plant procedures. Currently supervises the Region I maintenance inspection program.

RESUME OF ROBERT M. LOESCH, RADIATION SPECIALIST, NRC REGION I

Mr. Loesch came to the NRC in December, 1986, with over 17 years of experience in health physics and a formal education in physics. During his military service, he managed both a Radioactive Material Disposal Facility in Okinawa, serving the Pacific area and was responsible for organizing and training an accident response team for the transportation of nuclear weapons. Subsequent to his discharge, he spent 7 years consulting for various nuclear utilities. In addition, Mr. Loesch has served as a Radiation Safety Officer in both the academic and industry environments and as Chief, Radiation Health Physics Division, at a government research facility. He is a examination board member for the National Registry of Radiation Protection Technologists, and has served as a technical reviewer for the Radiation Protection Management journal.

While with the NRC, Mr. Loesch was qualified as a Reactor Health Physics Inspector in September, 1987. His responsibilities include power reactors, research reactors, and both low and high enriched fuel fabrication facilities.