CAT. IV CRO

TRAINING PROGRAM

UNIT #1/2

PURPOSE:

Provide guidelines for individual study, and to realize the total training concept. Assignment sheets have start and stop dates to indicate the speed of progression required to complete the training program in nine (9) calendar months.

8001210498

METROPOLITAN EDISON COMPANY Subsidiary of General Public Utilities Corporation

Subject CATEGORY IV CRO TRAINING PROGRAM

Location TMI Nuclear Station
Middletown, Pa.

Date October 8, 1976

To J.G. HERBEIN
J.J. COLITZ
G.P. MILLER
DEPT. HEADS

Enclosures: (1) Category IV CRO Study Assignment Sheet
(2) Practical Evolutions Sheet
(3) 90 Day CRO Probationary Period

POOR ORIGINAL

1. When an Auxiliary Operator is advanced to Category IV CRO, he will immediately be placed into a Control Room Operator training program. This training program will consist of: (1) specific study assignments, (2) oral checkouts in which the individual actually performs or simulates performing certain evolutions, (3) written tests, (4) oral examinations and (5) classroom sessions, as set forth in the following:

2. Upon being advanced to Category IV CRO, the individual will fall immediately into the Shift organization as it exists at the time. Two (2) hours, as a minimum, of each day on shift will be specifically devoted to training. The individual will be provided with a desk or other suitable place to study in the Control Room area. The two (2) hour period will occur at a definite time of each day on shift insofar as practical.

3. At the beginning of each shift cycle, 5 or (6 shift), the individual will be provided with an assignment sheet (see Enclosure 1) which will detail study assignments for the two (2) hour periods for the first 11 (14 working days of his shift cycle. On the 12th (15th) working day, the individual will take a written test covering these assignments. On the 13th (16th) working day, the individual will receive assignments as above to cover the 13th (16th) through 23rd (28th) working days of a shift cycle. On the 24th (29th) working day, the individual will again take a written test. On the 25th (30th) working day of a shift cycle, the individual will take an oral examination covering the assigned areas of study during the shift cycle specifically, and comprehensive of the material covered to that date.

4. The written tests will be corrected and returned. Errors and weak areas will be covered with the individual, and reassigned.
Weak areas on written and oral examinations will be covered with the individual and his bargaining unit representative, if requested. Complete failure of a written exam or oral exam will be discussed with the individual and a bargaining unit representative prior to a retest on the material. Failure of the retest will require a subsequent discussion with the individual and a bargaining unit representative.

5. Additionally the Category IV CRO will be required to complete a Practical Evolutions Sheet (see Enclosure 2). This sheet will be completed either during the individuals' daily training period, or during other times while on shift as

situations dictate. Most of the items on Enclosure 2 involve performing evolutions, simulating performing evolutions, and understanding and being able to explain while simulating or performing. The individuals' Shift Supervisor, Shift Foreman, an SRO Licensed individual, or (in specifically designated cases) the licensed Training Coordinator may sign the practical evolution sheet.

6. Assignments detailed in paragraph 3 above, on which written and oral tests will be given, will come largely from items in Enclosure 2 with some assignments specifically intended to obtain signatures on Enclosure 2.

7. Checkouts for items on Enclosure 2 which must be simulated will be conducted in front of the Control Room Consoles and Panels, with the individual being required to point to specific items and controls. The checkout must be satisfactory prior to a signature for the evolution. The evolutions are assigned a point value to track the progress of an individual through the nine (9) month program. The required rate of progress is approximately 6 points every 4 working days.

8. To aid the individual in the training assignment completion, the Category IV CRO may come off shift to attend lectures on specific topics, listed below, as determined by the Supervisor of the Training Department and the Supervisor of Operations.

a.	Reactor Theory	-	1 day - 1 week
b.	ICS Review	-	1 day - 1 week
c.	Simulator	-	1 week - 2 weeks
d.	Health Physics Review	-	1 day - 1 week
e.	Refueling Review	-	1 day - 1 week

These off shift lectures should aid the individual in obtaining signatures on Enclosure 2.

9. The first 90 days of the Category IV CRO Training Program is designated as a Probationary Period. The individual will be evaluated using Enclosure 3. At the end of this 90 day period, the Shift Supervisor, Supervisor of Operations and the Supervisor of Training will recommend whether or not the individual should continue in the program.

10. Prior to the completion of the 9 months time period for the program, the Category IV CRO will be given a comprehensive written examination approved by the Supervisor of Operations and the Supervisor of Training.

The results will be available for review by the Category IV CRO and a Union designated R.O. Licensed individual. Additionally within the Training Program time period the Category IV CRO will be given a comprehensive oral examination by an SRO licensed individual designated by the Supervisor of Operations. The Category IV CRO will have the option of having a Union designated, R.O. Licensed individual present during the oral examination. Any examination failed, written or oral, will be reviewed with the Category IV CRO and a bargaining unit representative. If the Category IV CRO has successfully completed the above outlined training program, within 9 months, including the comprehensive written and oral examination, the individual may be advanced to Category II CRO. If the Category IV CRO has not successfully completed the training program, within 9 months, and successfully passes the written and oral examinations, the individual may or may not be advanced to Category II CRO. If the Category IV CRO has not successfully completed the program, within 9 months, and fails either the written and/or the oral examination, the individual will be

returned to the position held prior to being advanced to Category IV CRO. If the individual successfully completes the training program, within 9 months, and fails either the written or oral examination, a re-exam will be considered based upon an evaluation by the Supervisor Of Operations and the Supervisor of Training.

Richard W. Zechman

Supervisor of Training

AT:kr
Enclosures

ENCLOSURE 1

CATEGORY IV CRO STUDY ASSIGNMENT SHEET

NAME: _____ START DATE: _____

COMPLETION DATE: _____

ASSIGNMENTS _____ CYCLE HALF _____

TOTAL POINTS TO DATE FROM ENCLOSURE 2 _____

WRITTEN TEST DATE _____ RESULTS _____

ORAL TEST DATE _____ RESULTS _____

ANSWERS MISSED, HANDED IN CORRECTED _____

_____ DATE: _____

SIGNATURE OF LICENSED TRAINING COORD.

ENCLOSURE I

CATEGORY IV ASSIGNMENT SHEET

1. The enclosed study assignment sheets indicate those items which are to be completed during each two week period (½ cycle).

2. On the reverse side of each assignment sheet, there is a list of reference material which may be needed to complete some of these assignments.

3. For information on specific equipment (pumps, valves, motors, etc.) the technical manual (vendor manual) will be needed. The technical manuals are kept in the TMI Technical Library. Contact the TMI Office Supervisor for information on the use of the library.

ENCLOSURE 2

PRACTICAL EVOLUTION SHEET

The evolution sheet is an outline of specific items which are required to become a proficient Control Room Operator. The evolutions as to actions required for satisfactory completion are coded P, S, D or (X).

P - Perform: The evolution has to be carried out by the individual to the satisfaction of the Shift Supervisor, Shift Foreman or the Licensed Training Coordinator as denoted by an asterick.

S - Simulate: The evolution has to be demonstrated, without actually performing it, by the individual to the satisfaction of the Shift Supervisor, Shift Foreman, or Licensed Training Coordinator as denoted by an asterick.

D - Discuss: The individual must show orally that the evolution is understood to the satisfaction of the Shift Supervisor, Shift Foreman, or the Licensed Training Coordinator as denoted by an asterick.

(X) - Performed or Simulates: at Simulator
The evolutions are additionally assigned a point value. The Category IV CRO must receive approximately 6 points every 4 working days to satisfactorily complete the program in the nine month period.

The evolutions are preceded by capital letters A,B,C,D,E,F or G to indicate which category of an NRC exam they fall. Additionally, the capital letter N is used to denote which procedures are sent to the NRC.

Two Plant Startups, to the point of adding heat are required prior to application for a license, as well as two shutdowns, (to Hot shutdown).

ENCLOSURE 2

	EVOLUTIONS	ACTION CODE	SIGNATURE	POINTS
	ADMINISTRATIVE PROCEDURES			
N	Document Control (1001)	D		1 pt
F	Tagging (1002)	P or S & D		2 pts
N	Radiation Protection Manual (1003)	S & D		2 pts
F/N	Radiation Emergency Plan (1004) (2 volumes)	D		2 pts*
F	Station Organization and Chain of Command (1009)	D		1 pt *
F	Technical Specification Surveillance Program (1010)	D		1 pt
F	Shift Relief and Log Entires (1012)	D		1 pt
F	Bypass and Safety Functions and Jumper Control(1013)	D		1 pt
F	Call of Standby Personnel to Plant (1014)	D		1 pt*
F	Operator at the Controls (1028)	D		1 pt
F	Control of Access to Primary System Openings (1030)	D		1 pt
	EMERGENCY AND ABNORMAL PROCEDURES			
F/N	Load Rejection (1203-1)(2203-2.1)	P or S & D		2 pts
F	High Cation Cond. in Condensate (1203-5)	D		1 pt
F	Hand Calc. for Quad. Power Tilt & Core Power Imbalance (1203-7) (2103-1.11)	P or S & D		2 pts
	Industrial Waste Treatment (1104-50A)			

ENCLOSURE 2

	EVOLUTIONS	ACTION CODE	SIGNATURE	POINTS
	Plant Response to Penetration of Protected Area (1202-13)	D		1 pt
F/N	Unanticipated Criticality (1203-10) (2202-1.2)	S & D		2 pts
F/N	Loss of Reactor Coolant Makeup (1203-15) (2203-1.5.)	S & D		2 pts
F/N	R.C. Pump and Motor Emergencies (1203-16) (2203-1.4)	S & D		2 pts
F/N	River Water Failure (1203-19)(1202-38) (2203-1.7)	S & D		2 pts*
F/N	MSCC System Failure (1203-20 (2203-1.6)	S & D		2 pts*
F/N	SSCC System Failure (1203-21) (2203-2.4)	S & D		2 pts*
F/N	Steam Supply System Rupture (1203-24) (2203-2.3)	S & D		2 pts*
F/N	Post Accident H2 (Purge 1203-28)(Control 2203-2.6)	D		1 pt
	Class 1E Electrical (2107-1.2)			
F	Control Room HVAC (1203-34) (2203-2.5)	D		1 pt
F	Vibration and Loose parts (1203-40)(2203-1.8)	D		1 pt
	Substation (500 kv) (2107-1.3)			
F/N	Blackout (1202-2/2A) (2202-2.1/2.5)	S & D		3 pts
F/N	Turbine Trip (1202-3) (2203-2.2)	P or S & D		2 pts
F/N	Reactor Trip (1202-4) (2202-1.1)	P or S & D		2 pts
F/N	OTSG Tube Rupture (1202-5)(2202-2.6)	D		1 pt
F/N	Loss of RC/RC Press. (1202-6) (2202-1.3)	P or S & D		2 pts
F/N	Loss of RC Flow/RCP Trip (1202-14) (2202-1.4)	P or S & D		2 pts

ENCLOSURE 2

	EVOLUTIONS	ACTION CODE	SIGNATURE	POINTS
F/N	CRD Equipment Failures (1202-8) (2203-1.2)	P or S & D	_____	3 pts
F/N	CRD Malfunction Action (2203-1.3)	P or S & D	_____	2 pts
F/N	Loss of Boron (2203-1.1)	P or S & D	_____	2 pts
F/N	Hi Activity in Reactor Coolant (1202-11) (2202-1.6)	S & D	_____	2 pts*
F/N	Excessive Radiation Levels (1202-12) (2202-1.7)	S & D	_____	2 pts*
F/N	Loss of Intermediate Cooling (1202-17) (2202-1.9)	S & D	_____	2 pts*
F/N	Loss of Feed to OTSG (1202-26A/B) (2202-2.2)	S & D	_____	3 pts
F/N	Pressurizer Failure (1202-29) (2202-1.5)	S & D	_____	2 pts
F/N	Loss of Decay Heat Removal (1202-35) (2202-1.8)	S & D	_____	2 pts*
F/N	Loss of Instrument Air (1202-36) (2202-2.3)	S & D	_____	2 pts
F/N	Cooldown Outside Control Room (1202-37) (2202-1.10)	S & D	_____	3 pts*
F/N	Fire (1202-31) (2202-3.1)	S & D	_____	3 pts*
F/N	Flood (1202-32) (2202-3.2)	D	_____	1 pt *
F/N	Earthquake (1202-30) (2202-3.3)	D	_____	1 pt *
F	Alarm Responses	S & D	_____	5 pts
	OPERATING PROCEDURES			
N	Plant Limits and Precautions (1101-1)(2101-1.1)	D	_____	2 pts
N	Plant Setpoints (1101-2) (2101-2.1)	D	_____	2 pts

ENCLOSURE 2

	EVOLUTIONS	ACTION CODE	SIGNATURE	POINTS
C/F/N	Plant Heatup to 525°F (1102-1) (2102-1.1)	P,S (X)	_____	2 pts
C/F/N	Plant Startup (1st) (1102-2) (2102-1.3)	P, (X)	_____	2 pts
C/F/N	Plant Startup (2nd) (1102-2) (2102-1.3)	P, (X)	_____	2 pts
C/F/N	Power Operation (1102-4) (2102-2.1)	P	_____	2 pts
C/F/N	Plant Shutdown (1st) (1102-10) (2102-3.1)	P, (X)	_____	2 pts
C/F/N	Plant Shutdown (2nd) (1102-10) (2102-3.1)	P, (X)	_____	2 pts
C/F/N	Plant Cooldown (1102-11) (2102-3.2)	P,S	_____	2 pts
C/F/N	Pressurizer Operation (1103-5) (2103-1.3)	P	_____	1 pt
C/F/N	Reactor Coolant Pump Operation (1103-6)(2103-1.4)	P,S & D	_____	1 pt
C/F/N	Approach To Criticality (1103-8) (2102-1.2)	P (X)	_____	2 pts
C/N	Heat Balance Calculation (Computer)(1103-16)(2103-1.10)	P	_____	2 pts*
C/N	Heat Balance Calculation (Hand) (1103-16)(2103-1.10)	P	_____	2 pts*
C/N	Reactivity Balance (ECP) (1103-15) (2103-1.9)	P	_____	1 pt *
C/N	Reactivity Balance (Pwr Change)(1103-15)(2103-1.9)	P	_____	1 pt *
C/N	Reactivity Balance (Boron Change)(1103-15)(2103-1.9)	P	_____	1 pt *
C/N	Reactivity Balance (SDM) (1103-15) (2103-1.9)	P	_____	1 pt *
E/N	Core Flood System (1104-1) (2104-1.1)	P or S or D	_____	1 pt *
E/N	Makeup and Purification (1104-2) (2104-1.2)	P & D	_____	2 pts

ENCLOSURE 2

	EVOLUTIONS	ACTION CODE	SIGNATURE	POINTS
E/N	Decay Heat Removal (1104-4) (2104-1.3)	P & D		2 pts
B/F/N	Decay Heat Closed (1104-13) (2104-3.3)	P & D		2 pts*
B/F/N	Decay Heat River (1104-32)	P & D		2 pts*
E/N	Reactor Building Spray (1104-5) (2104-1.4)	P & D		2 pts
B/F/N	Spent Fuel Cooling (1104-6) (2104-1.5)	P & D		2 pts*
B/F/N	Intermediate Cooling (1104-8) (2104-1.6)	P & D		2 pts*
B/F/N	Circulating Water (1104-9) (2104-3.6)	P & D		2 pts
B/F/N	Nuclear Services Closed (1104-11) (2104-3.2)	S & D		2 pts*
B/F/N	Nuclear Services River (1104-30) (2104-3.1)	P & D		2 pts*
B/F/N	Secondary Services Closed (1104-12) (2104-3.5)	P & D		2 pts*
B/F/N	Secondary Services River (1104-31) (2104-3.4)	P & D		2 pts*
B/F/N	Instrument Air (1104-25) (2104-2.3)	P & D		2 pts
B/F/N	Station Service Air (1104-42) (2104-2.10)	P & D		2 pts
B/F/N	Reactor Bldg. Emerg. Cooling River Water (1104-38)	P & D		2 pts*
B	Reactor Bldg Ventilation (1104-14A-F) (2104-5.1)	S & D		2 pts*
B/F/N	Nuclear Plant Sampling (1104-43) (2104-1.11)	D		1 pt
B/F/N	Secondary Plant Sampling (1104-44) (2104-2.8)	D		1 pt
C/N	Bleed and Feed Process (1104-29E)	P or S & D		2 pts

ENCLOSURE 2

	EVOLUTIONS	ACTION CODE	SIGNATURE	POINTS
E/N	Fire Protection (1104-45) (2104-6.1)	S & D		3 pts
B/F/G/N	Radwaste (1104-27,28,29 A/B/C/D/E/I/P/S) (Unit I)	D		6 pts*
B/F/G/N	Radwaste (2104-4.1/2/3/4/5/6) (Unit II)	D		6 pts*
D/N	Nuclear Instrumentation (1105-1) (2105-1.1)	S & D		2 pts*
D/N	Non-Nuclear Instrumentation (1105-6 (2105-1.6)	S & D		2 pts*
D/N	RPS (1105-2) (2105-1.2)	S & D		2 pts
E/N	Safeguards Actuation (1105-3) (2105-1.3)	S & D		2 pts
D/N	Incore Monitoring (1105-5) (2105-1.5)	S & D		2 pts
G/N	Radiation Monitoring (1105-8) (2105-1.8)	S & D		2 pts*
D/N	ICS (1105-4) (2105-1.4)	P & D		3 pts
D/N	Control Rod Drive (1105-9) (2105-1.9)	P & D		3 pts
D/N	Computer (1105-10) (2105-1.10)	D		1 pt
B/F/N	Turbine Generator (1106-1) (2106-3.1)	P & D		3 pts
B/F	Hydrogen Seal Oil (1106-8) (2106-3.3)	D		1 pt*
B/F	Turbine Lube Oil (1106-9) (2106-3.2)	D		1 pt*
B/F	Stator Cooling (1106-7)	D		1 pt*
B/F	EHC (1106-17) (2106-3.4)	D		1 pt
	BOP Electrical (2107-1.1)	D		1 pt

ENCLOSURE 2

	EVOLUTIONS	ACTION CODE	SIGNATURE	POINTS
B/F	Isolated Phase Bus Duct Cooling (1106-11)(2106-3.6)	D		1 pt*
B/F	Condensate (1106-2) (2106-2.1)	P & D		3 pts
B/F	Cond. Polishing (Powdex) (1106-13) (2106-2.2)	D		1 pt
B/F	Condenser Air Removal (1106-15)(2106-2.3)	D		1 pt*
B/F	Feedwater (1106-3) (2106-2.4)	P & D		3 pts
B/F	OTSG Fill, Drain, Layup (1106-16)(2106-2.5)	D		1 pt
B/F	Auxiliary Steam (1106-4) (2106-1.3)	D		1 pt*
B/F	Gland Steam (1106-10) (2106-1.4)	D		1 pt
B/F	Extraction Steam, Heater Vents & Drains (1106-12) (2106-1.2)	D		1 pt
B/F	Main Steam (Reheat) (1106-14) (2106-1.1)	D		1 pt
B/F	Turbine Bypass (1106-5) (2106-1.5)	S & D		2 pts
E	Emergency Feed (1106-6) (2104-6.3)	S & D		2 pts
B	Normal Electrical System (1107-1)	D		1 pt*
B	Component Electrical (Panel) (1107-4/5)	D		1 pt
B	Emergency Electrical (1107-2)	D		1 pt
B/E	Diesel Generator (1107-3) (2104-6.2)	P or S & D		3 pts
B	Vibration Loose Parts (1105-14) (2105-1.13)	D		1 pt
	Soluable Poison Control (1103-4) (2103-1.2)	P & D		3 pts

ENCLOSURE 2

	EVOLUTIONS	ACTION CODE	SIGNATURE	POINTS
	Unit Ventilation (Misc. Procedures)	D		1 pt
	Chlorination (Chem Treatment)			
	River Water (1104-36) (2104-3.9)	D		1 pt
	Circulating Water (1104-35) (2104-3.10)	D		1 pt
	Water Chemistry Control (2103-1.7)	D		1 pt
	Environmental Barrier System (2104-1.8)	D		1 pt
	CO_2 Fire System (1104-56)	D		1 pt
	R.B. Atmosphere Cleanup (1104-55)	D		1 pt
	Control Tower Vent (1104-19) (2104-5.4)	D		1 pt
	Fluid Block (1104-20)	D		1 pt
	Penetration Pressurization (1104-21)	D		1 pt
	Reactor Building Purge (1102-14) (2102-4.1)	P or S & D		2 pts
	H_2 Addition and Degas (1102-12) (2103-1.5)	P or S & D		2 pts
	Decay Heat Removal by OTSG (1102-13) (2102-3.3)	S,D		2 pts
	HEALTH PHYSICS			
G/N	Radiation Dose Survey (1602)	D		1 pt
G/N	Neutron Survey (1603)	D		1 pt
G/N	Alpha Survey (1604)	D		1 pt

ENCLOSURE 2

	EVOLUTIONS	ACTION CODE	SIGNATURE	POINTS
G/N	Surface Contamination (1609)	D		1 pt
G/N	Est. and Posting Areas (1610)	D		1 pt
G/N	Radiation Work Permit (1613)	P & D		2 pts
G/N	Use of Respiratory Protection Devices (1616)	D		1 pt
G/N	Radiation Emergency Procedure (Emergency Plan) (1670.1)(1670.2)(1670.3)	D		1 pt
G/N	Control of Contaminated Spills (1681)	D		1 pt
G/N	Use of Protective Clothing (1686)	D		1 pt
	Industrial Waste Treatment (1104-50A)			
	Release of Radioactive Liquid (1621)(1621.1)			
	Release of Radioactive Gas (1622)(1622.2)			
	OTHER			
B/F	Technical Specification Test	P		10 pts*
A	Reactor Theory Test	P		10 pts*
G	Radiation Control Test	P		10 pts*
F	Refueling Test	P		10 pts*
	Startup Certification	P(X)		10 pts*

90 Day

CRO Probationary Period

Use of 90 Day Probationary Rating Sheet

To be used as a guide for the Cat. IV CRO's, Shift Supervisor and Supervisor of Operations to determine:

1.) Progress of the Individual (Cat. IV CRO) that is documented, and
2.) Identify the weak areas of the individual (Cat. IV CRO), and
3.) Assess the compatibility of the individual (Cat. IV CRO) with the job, and
4.) Supply more specific information to the Supervisor completing the 30, 60, and 90 day evaluations.

All of the areas of evaluation are job related and performance related for a Cat. IV CRO. The month blocks (first, second, third) for the areas of evaluation are completed with an evaluation mark and the initials of the shift supervisor, shiftforeman or training co-ordinator (denoted by*). The marks for evaluation are:

1.) N/A - does not apply
2.) SAT - Satisfactory - this denotes that the Cat. IV CRO is progressing normally, understands the area of evaluation, can discuss the area of evaluation, and can physically perform evaluations under supervision.
3.) UNSAT- Unsatisfactory - this denotes that the Cat. IV CRO is not progressing, does not understand area of evaluation, cannot discuss area of evaluation and has difficulty with physically performing evolutions under supervision.
4.) MARG - Marginal - this denotes that the Cat. IV CRO is progressing but slowly, is weak in understanding of area of evaluation, has some difficulty in discussing area of evaluation and has some difficulty with physically performing evolutions under supervision.

NOTE: All marks of UNSAT. and MARG. will require remarks on additional paper and attached to probationary rating sheet. This is to specifically identify the problems in the area of evaluation.

The block labeled "overall" is to be used by the Supervisor of Operations, Shift Supervisor and the Training Dept. Head of components on areas of evaluation

Cat. IV 90 Day Probat ary Rating Sheet

Name: _____

Area of Evaluation	First Month	Second Month	Third Month	OVERALL
I. Console Operations				COMMENTS:
a. Manual Dexterity				
b. Control Location				
c. Instrument Interpretation				
d. Alarm Response				
e. Basic Operation ICS				
f. Basic Operation Diamond				
g. Basic Operation PI Panel				
II. Leadership				COMMENTS:
a. Directing Aux. Operators				
b. Planning Work				
c. Interface with SF & SS				
d. Decision Making				
III. Health Physics				COMMENTS:
a. Basic HP Concepts				
b. Basic HP Inst. Concepts				
c. Basic RMS Knowledge				

Cat. IV CRO 90 Day Probationary Rating Sheet

Area of Evaluation	First Month	Second Month	Third Month	OVERALL
IV. Operating Awareness				COMMENTS:
a. Standing Orders				
b. Operations Memos				
c. Revision Review Book				
d. Evolutions Book (OJT)				
e. Tech Specs. Sect. III				
f. Tech Specs. Sect. IV				
g. Tech Specs. "Appendix B"				
V. Cat. IV CRO Training				COMMENTS:
*a. 1st cycle 1st half				
*b. 1st cycle 2nd half				
*c. 2nd cycle 1st half				
*d. 2nd cycle 2nd half				
e. Cat. IV CRO Program Encl. 2				
VI. Surveillance				COMMENTS:
a. Tech Spec.				
b. Other				

Cat. IV CRO 90 Day Prot 'onary Rating Sheet

Area of Evaluation	First Month	Second Month	Third Month	OVERALL
VII. Computer Operation				COMMENTS:
a. Displays				
b. Functions				
c. Groups				
d. Calculations Performed				
VIII. Integrated Plant Operation				COMMENTS:
a. Effects on Plant (Primary - Secondary)				
b. Location of Equipment				
IX. Other:				COMMENTS:
a. Flow Prints				
b. Elementary Electrical				

90 Day Probation Recommendation Sheet

I ☐ do ☐ do not recommend individual to continue with Cat IV CRO Training

_____
Shift Supervisor

Comments:

I ☐ do ☐ do not approve recommendation of Shift Supervisor.

_____
Supervisor of Operations

Comments:

Cat. IV 90 Day Probationary Rating Sheet "Area of Evaluation" Requirement Guidelines.

I. Console Operations

a) Manual Dexterity

-Capable of Operation of various system controls:
(1. Pistol grip control for pump breakers, feeder breakers, etc.,
2. Push button controls for valves and tests,
3. Dial controls for voltage and setpoint adjustment,
4. Toggle switch for ICS control)
-Capable of changing paper on recorders.

b) Control Location

-Knows location of valve pump controls in control room (responsible for controls for systems on which he is checked out)
-Has knowledge of controls in the plant (especially those with redundant controls in control room)

c) Instrument Interpretation

-Capable of reading instruments accurately
-Capable of judging trends as normal or abnormal
*(special attention should be paid to CRO's ability to interpret source, intermediate, power range, and RMS Indications).

d) Alarm Response

-For common alarms knows the required actions
(e.g. Neutralizing tank pH Hi/Lo is a common alarm)
-Also knows required actions for such things as turb. trip, RX trip
-For uncommon alarms knows where to find required actions
(e.g. Generator ground is not a common alarm)
(i.e. How to use alarm responses)

e) Basic Operation of ICS
-Knows whether or not plant will increase or decrease output with-manual adjustment of specific Baily Controls.
-Know what tracking is and what it does.

f) Basic Operation of Diamond Panel
-Understands panel operation such that CRO is capable of,
-Imbalance correction, single rod or group movement
-Can perform startup under supervision
-Can talk through lights on diamond panel

g) Basic Operation of PI Panel
-Knows difference between the two indications available
-Knows how to reset RPI
-Knows what red, white, green and amber lights-imply

II. Leadership

a) Directing Aux. Operators:
-Can command needed respect from AO's
-Can get AO's to accomplish necessary jobs
-Uses tact in dealing with AO's

b) Planning work:
Is capable of scheduling work to accomplish it in the alotted time

c) Interface with SF & SS:
-Compatibility with supervisors
-Able to receive and transmit supervisors orders

d) Decision Making:
-Makes decisions that are fair and displays confidence in sticking to the decisions
-Is able to react to adverse conditions with rationality

III. Health Physics

a) Basic HP Concepts:
-Knowledge of radiation
-Radiation areas
-Requirement for RWP's
-Use of protective clothing, effects of radiation (particulate & gas) Beta, Gamma, Alpha, Neutron)

b) Basic HP Instrument Concepts:
-Knows how the different portable detection instruments function and when to use them
-Knows function of TLD, Film Badge, Dosimeter and how they work

c) Basic RMS Knowledge:
-Knows locations of Radiation Monitors and types (liquid, area, gamma)
-Knows how RMS detectors and what respective trends indicate
-Has basic idea of trips that can be received from the RMS and how to bypass the trips.

IV. Operating Awareness

a) Standing Orders:
-Is signed off and up to date
-Understands the standing orders

b) Operations memos:
-Is signed off and up to date
-Understands the meaning of applicable operating memos

c) Revision Review Book:
-Is signed off and up to date
-Is aware of the changes and their effect on the CRO operating the plant

d) Evolution Book (OJT)
-Has evolutions such as reactively manipulations, turbine startup, etc. recorded and signed off

e. e) Tech Specs Sect. III
-Knows what areas these Tech Specs cover and effects on Plant Operation

f) Tech Specs Sect. IV
Knows the areas covered in this section

Note: The same depth of Tech. Spec. knowledge is not required at the end of 3 months as would be required at the end of the training program.

V. Cat. IV CRO Training
a) 1st Cycle 1st Half
-Completes required assigned material and completes test

b) 1st Cycle 2nd Half
-Completes required assigned material and test

c) 2nd Cycle 1st Half
-Completes required assigned material and test

d) 2nd Cycle 2nd Half
Completes required assigned material and tests

e) Cat IV CRO Program Enclosure 2
-Obtains signatures for procedures/systems on which the SF/SS/training co-ordinator feel his knowlege is acceptable.
(The signature is obtained after oral examination on procedure/system with SF/SS/TC. Rate of progress on practical evolutions should approximate that specified on the Cat. IV CRO Training Program).

VI. Surveillance
a) Tech Spec
-Awareness of the surveillance requirements and their effects on the plant
-Participates in surveillance as applicable

VII. Computer Operation
a) Displays
-Can display points and groups

b) Functions
-Knows what the various functions will give him (eg single point log, add point to group, etc.)
-Knows how to add and delete points to scan

c) Groups:
-Knows how to use groups and what they tell CRO

d) Calucations Performed
-Capable of using computer for calculations of leak rate, heat balance, Reactivity Balance, etc.

ENCLOSURE 1

UNIT II CATEGORY IV STUDY ASSIGNMENT SHEET

CYCLE 1-1

NAME_____ START DATE_____

COMPLETION DATE _____

1. Read the following Administrative Procedures:
   a. 1001 Document Control
   b. 1002 Tagging
   c. 1009 Station Organization
   d. 1010 Tech. Spec. Surveillance
   e. 1012 Shift Relief and Log Entries
   f. 1013 Bypass and Jumper Control
   g. 1028 Operator at the Controls

2. Read System Description #15- Circulating Water

3. Read System Description #14- CW and RW Chemical Treatment

4. Trace the CW System

5. Read OP 2104-3.6 - Circulating Water

6. Complete the Circulating Water Questionnaire

7. Read System Description #16- Secondary River Water

8. Trace the SR System

9. Read the following procedures:
   a. OP 2104-3.7 Screen House Equipment
   b. OP 2104-3.4 Secondary River Water
   c. OP 2104-3.8 MDCT Operation

10. Read System Description #27- Nuclear Services River Water

11. Trace the NR System

12. Read the following procedures:
    a. OP 2104-1.7 NR System
    b. EP 2203-1.7 NR Water Failure

13. Complete the River Water Systems Questionnaire

14. Read System Descriptions #58 and #59- Class 1E and BOP Electrical

15. Review B&R Dwg. 3001-3017 - Distribution

16. Locate Unit II Busses, Unit Substations, and Motor Control Centers

CYCLE 1-1 STUDY ASSIGNMENT SHEET (continued)

17. Read the following procedures:
    a. OP 2107-1.1 BOP Electrical
    b. OP 2107-1.2 Class 1E Electrical
    c. EP 2202-2.1 Blackout
    d. EP 2202-2.5 Blackout with a Loss of Both Diesels

18. Complete the Electrical Systems Questionnaire

19. Read Section I Tech Spec. Definitions

20. Read 2104-6.2 and Emergency Diesel Generator Handout

TOTAL POINTS TO DATE FORM ENCLOSURE 2 _____

WRITTEN TEST DATE _____ RESULTS _____

ORAL TEST DATE _____ RESULTS _____

ANSWERS MISSED, HANDED IN CORRECTED _____

_____ DATE _____
SIGNATURE OF LICENSED TRNG. COORD.

CYCLE 1-1

REFERENCE MATERIAL FOR QUESTIONNAIRES

REF.#	TITLE
1	CW System Description #15*
2	CW & RW Chem. Treatment System Description #14
3	FSAR Section 10.4.5 - Circ. Water
4	B & R Dwg. #2023
5	Amertap Handout - Enclosed
6	CW Pump Tech Manual
7	CW Procedure - OP 2104-3.6
8	CW Chem Treatment Procedure - OP 2104-3.10
9	Secondary River Water System Description #16
10	SR Procedure - OP 2104-3.4
11	Screen House Equipment Procedure - OP 2104-3.7
12	Nuclear River Water System Description #27
13	NR Procedure - OP 2104-3.1
14	NR System Failure - EP 2203-1.7
15	B & R Dwg. #2033
16	MDCT Procedure - OP 2104-3.8
17	B & R Dwg. #3001-#3017 (Distribution)
18	System Description #58 - BOP Electrical
19	BOP Procedure - OP 2107-1.1
20	System Description #59 - Class 1E Electrical
21	Class 1E Electrical Procedure - OP 2107-1.2
22	Blackout - EP 2202-2.1
23	Blackout with Loss Of Both Diesels - EP 2202-2.5
24	Electrical Handout - Enclosed

*NOTE: System Descriptions are introductory in nature and DO NOT always reflect recent changes to systems. Therefore, unless the question specifically refers you to a System Description, do not use it as a reference source

THREE MILE ISLAND NUCLEAR STATION
UNIT #2

ADMINISTRATIVE PROCEDURES

1001	Document Control
1003	Radiation Protection Manual
1004	Volume I, Three Mile Island Emergency Plans and Procedures
1004	Volume II, Three Mile Island Emergency Plans and Procedures
1009	Station Organization and Chain of Command
1012	Shift Relief and Log Entries
1013	ByPass of Safety Functions and Jumper Control
1014	Recall of Standby Personnel to Plant

HEALTH PHYSICS PROCEDURES

1609	Surface Contamination Surveys
1610	Establishing and Posting Areas
1613	Radiation Work Permits
1640	Personnel Dosimetry, Issuance, Administration and Record Keeping
1641	Self-Reading Dosimeter Usage and Record Keeping
1681.2	Control of Contaminated Spills

OPERATIONS PROCEDURES

2101-1.1	Nuclear Plant Limits and Precautions
2101-2.1	Nuclear Plant Setpoints
2102-1.1	Unit Heatup
2102-1.2	Approach to Criticality
2102-1.3	Unit Startup
2102-2.1	Power Operations
2102-3.1	Unit Shutdown
2102-3.2	Unit Cooldown
2102-3.3	Decay Heat Removal Via OTSG
2102-4.1	Reactor Building Purge and Purification
2103-1.1	Filling and Venting the Reactor Coolant System
2103-1.2	Soluble Poison Concentration
2103-1.3	Pressurizer Operation
2103-1.4	Reactor Coolant Pump
2103-1.5	Hydrogen Addition and Degassification
2103-1.6	Draining and Nitrogen Blanketing of the Reactor Coolant System
2103-1.9	Reactivity Balance
2103-1.10	Heat Balance Calculations
2103-1.11	Hand Calculation of Quadrant Power Tilt and Axial Power Imbalance
2104-1.1	Core Flooding System
2104-1.2	Makeup and Purification System
2104-1.3	Decay Heat Removal
2104-1.4	Reactor Building Spray
2104-1.5	Spent Fuel Cooling System
2104-1.6	Intermediate Closed Cooling Water System
2104-1.7	Penetration Cooling
2104-1.12	Nuclear Plant Chemical Addition
2104-2.2	Demineralized Service Water
2104-2.3	Instrument Air System
2104-2.6	Main Generator Hydrogen Gas System

OPERATIONS PROCEDURES (cont'd)

2104-2.10 Service Air
2104-3.1 Nuclear Services River Water
2104-3.2 Nuclear Service Closed Cooling Water System
2104-3.3 Decay Heat Closed Cooling Water System
2104-3.4 Secondary Services River Water
2104-3.6 Circulating Water System
2104-4.1 Miscellaneous Liquid Radwaste Disposal System
2104-4.2 RC Liquid Waste Disposal System
2104-4.3 Waste Gas Disposal System
2104-4.4 Solid Waste Disposal System
2104-4.6 Reactor Coolant Leakage Recovery System
2104-5.1 RX Building Normal and Emergency Ventilation and Cooling
2104-6.1 Fire Protection System
2104-6.2 Emergency Diesels and Auxiliaries
2104-6.3 Emergency Feedwater
2104-6.4 Hydrogen Recombiner Operation
2104-6.5 Hydrogen Control System
2105-1.1 Nuclear Instrumentation
2105-1.2 Reactor Protection System
2105-1.3 Safety Features Actuation System
2105-1.4 Integrated Control System
2105-1.5 Incore Monitoring System
2105-1.8 Radiation Monitoring System
2105-1.9 Control Rod Drives
2105-1.12 Radiation Monitoring System Setpoints
2106-1.1 Main and Reheat Steam
2106-1.2 Extraction Steam and Feedwater Heater Vents and Drains
2106-1.4 Gland Steam
2106-1.5 Turbine Bypass
2106-2.1 Condensate System
2106-2.3 Condenser Air Removal System
2106-2.4 Feedwater
2106-2.5 OTSG Secondary Fill, Drain, and Layup
2106-3.1 Turbine Generator
2106-3.2 Turbine Lube Oil System
2106-3.3 Main Generator Hydrogen Seal Oil System
2106-3.4 Electro Hydraulic Control
2106-3.6 Isolated Phase Bus Duct Cooling System
2107-1.1 BOP Auxiliary Electrical
2107-1.2 Class 1E Electrical System

EMERGENCY PROCEDURES

2202-1.1 RX Trip
2202-1.2 Unanticipated Criticality
2202-1.3 Loss of RC/RCS Pressure
2202-1.4 Loss of RC Flow/RCP Trip
2202-1.5 Pressurizer System Failure
2202-1.6 High Activity in Reactor Coolant
2202-1.7 Excess Radiation Levels

EMERGENCY PROCEDURES (cont'd)

2202-1.8 Loss of Decay Heat Removal
2202-1.9 Loss of Intermediate Closed Cooling Water
2202-1.10 Shutdown from Outside the Control Room
2202-2.1 Station Blackout
2202-2.2 Loss of S. G. Feed
2202-2.3 Loss of Instrument Air
2202-2.5 Station Blackout with Loss of Both Diesels
2202-2.6 OTSG Tube Rupture
2202-3.1 Fire
2202-3.2 Flood
2202-3.3 Earthquake

ADNORMAL PROCEDURES

2203-1.1 Loss of Boron (Moderator Dilution)
2203-1.2 CRD Equipment Failure
2203-1.3 CRD Malfunction Actions
2203-1.4 RCP and Motor Emergencies
2203-1.5 Loss of RC Makeup
2203-1.6 Nuclear Service Closed Cooling Water Failure
2203-1.7 Nuclear Service River Water Failure
2203-1.8 Vibration and Loose Parts Monitoring System
2203-2.1 Load Rejection
2203-2.2 Turbine Trip
2202-2.3 Steam Supply System Rupture
2202-2.4 Secondary Services Closed Cooling Water Failure
2203-2.5 Control Room HVAC Failure
2203-2.6 Post Accident Hydrogen Control

FUEL HANDLING PROCEDURES

2501-1.1 Fueling Control Document
2501-3.5 Head Service Line Disconnecting
2501-3.8 Closure Head Stud Detensioning
2501-3.11 Closure Head Removal
2501-3.12 Reactor Internals Removal and Installation
2501-4.01 Core Assembly
2501-4.02 Defueling
2501-5.1 Reactor Upper Plenum Installation
2501-5.2 Closure Head Installation
2501-5.3 Guide Stud Removal and Closure Head Stud Installation
2501-5.4 Closure Head Stud Tensioning
2501-5.7 Head Service Line Connecting
2501-6.1 Receipt, Inspection, Fit-up and Storage of New Fuel & Control Components
2502-1.3 Main Fuel Handling Bridge
2502-1.4 Aux Fuel Handling Bridge
2502-1.5 Spent Fuel Handling Bridge
2502-1.6 New Fuel Elevator
2502-1.7 Fuel Transfer System

UNIT II CIRCULATING WATER QUESTIONNAIRE

CATEGORY IV

1-1

1. List the power supply to each CW Pump. Where can the CW pumps be controlled from? (Ref. #1)

2. Briefly explain how the CW Pump bearings are lubricated. (Ref. #1)

3. In reference to the main condenser, what is meant by the "hot shell" and "cold Shell"? What effect, if any, does this arrangement have on condenser operation? (Ref. #1)

4. Briefly explain how the Natural Draft Cooling Towers (NDCT) cool CW during normal operation. Why are two (2) distribution basins utilized? (Ref. #1)

5. Explain the operation of the interlock between the CW pump and its discharge valve. (Ref. # 1)

6. Assuming six (6) CW Pumps are operating, how will a loss of Bus 2-5 affect the CW System? Explain. (Ref. # 1)

7. After securing one of six operating CW Pumps, the discharge valve fails to close. What should be done? Why? (Ref. # 7)

8. You are about to commence a start-up of the CW system. Outline the instructions you should give to the Aux. Operator you send to the CW Pump House. (Ref. #7)

9. During a CW start-up, explain how and when we direct flow from the NDCT bypass lines to the NDCT fill. What precautions must be observed when performing this evolution? Why? (Ref. #7)

10. Explain how and why NDCT flow is adjusted during sustained cold weather periods. (Ref. #7)

11. As an operator, what parameters should you use to determine when NDCT ice formation is sufficient to warrant removal? How can we remove ice from the NDCT? (Ref. #7)

12. Explain the flow path of the Amertap system during normal operation. (Ref. #5)

13. Describe the Amertap System "normal backwash" and "emergency backwash". Indicate the setpoint that will initiate each cycle. (Ref. #5)

14. What chemicals are added to the CW System? Why? nere do these chemicals enter the CW System? (Ref. #2)

15. What function does Domestic Water perform in the Chlorinator Unit? What must be done if Domestic Water is lost to the Chlorinator? Why? (Ref. #8)

UNIT II RIVER WATER SYSTEMS QUESTIONNAIRE

CATEGORY IV CRO

1-1

1. List all the uses of SR Water. (Ref. #9)

2. Describe all the methods of removing debris from the river water before it enters the SR supply header. (Ref. #9)

3. Since SR ans NR join in a common header to the MDCT, how can we prevent NR from feeding a break in the SR discharge line? (Ref. #9)

4. List the power supplies and control locations for the SR Pumps. (Ref. # 9)

5. Describe the function and operation of the interlock between a SR Pump and its discharge valve. (Ref. #9)

6. Describe the normal flow path through the MDCT. (Ref. #9)

7. Explain how make-up water form the SR to CW system is controlled. (Ref. #9)

8. Outline the temperature and rate of temperature change limits we must observe relative to MDCT outlet and river water inlet temperatures. (Ref. #16)

9. Give a basic description of how we de-ice the MDCT. Include any applicable precautions to observe. (Ref. #16)

10. List the power supply to all NS River Pumps. Where are the operating controls located? (Ref. #12)

11. How many NSRW Pumps are necessary for normal and decay heat removal operation by; (a) design; (b) Tech. Specs.? (Ref. #12)

12. Outline what automatic actions occur when starting a NSRW Pump from the Control Room. (Ref. #13)

13. Outline the immediate manual actions required for a total loss of NSRW. (Ref. #14)

UNIT II ELECTRICAL SYSTEMS QUESTIONNAIRE

CATEGORY IV CRO

1-1

1. Draw a simplified diagram of the BOP Electrical Distribution System. Include the following: (Ref. #17)
   a. Auxiliary Transformers
   b. 6900v busses and breakers
   c. 4160v busses and breakers
   d. indicate breaker designations and normal positions

2. Describe how the BOP Electrical system will automatically respond to a fault in the "2A Aux. Transformer". (Ref. #19)

3. Explain the operation of the key interlock between the 480v USS main breaker and its disconnect switch. (Ref. #18)

4. Explain the three (3) operating positions of a 4160v breaker may be placed in. (Ref. #18)

5. Draw a simplified diagram of the Class 1E Electrical System. Include: (Ref.#17)
   a. All sources of power to the system
   b. Normal breaker positions
   c. All 4160v busses
   d. All 480v USS's
   e. DC Busses
   f. Vital Power Distribution

   DO NOT INCLUDE:
   a. MCC's
   b. DC Power Panels
   c. Individual Loads

6. Are we permitted to cross-connect Bus 2-1E and Bus 2-2E? Explain. (Ref. #21)

7. Explain the function and operations of the Vital Bus Static Transfer Switch. (Ref. #24)

8. Explain the function and operation of the "Inverter Manual Bypass Switch". (Ref. # 21)

9. Describe how the Class 1E system will respond to an undervoltage condition on Bus 2-1E. Assume worst case. (Ref. #21)

AMERTAP SYSTEM

UNIT II

INDEX

SECTION	PAGE
I. OBJECTIVES	1
II. PURPOSES OF THE SYSTEM	1
III. GENERAL SYSTEM DESCRIPTION	1,2,3,4,5,6,7,8,9,10
IV. OPERATIONAL DESCRIPTION	11,12,13,14,15,16,17,1
APPENDIX A - SYSTEM FACT SHEET	19
APPENDIX B - INTERLOCKS	20
APPENDIX C - IMPORTANT PARAMETERS	21
APPENDIX D - TECH SPECS	22
APPENDIX E - FLOW DIAGRAMS	23,24,25,26,27
APPENDIX F - REFERENCES	28

AMERTAP SYSTEM

I. OBJECTIVES

1. To know the purpose of the Amertap Condenser Cleaning System, understand the operation of the system and its importance and effects on normal plant operation.

II. PURPOSE OF THE SYSTEM

1. To provide continuous cleaning of the condenser tube ID's during normal operation of the plant.

III. GENERAL SYSTEM DESCRIPTION

The AMERTAP Condenser Tube Cleaning System operates on a closed cycle and is basically arranged as shown in Fig. 1.

POOR ORIGINAL

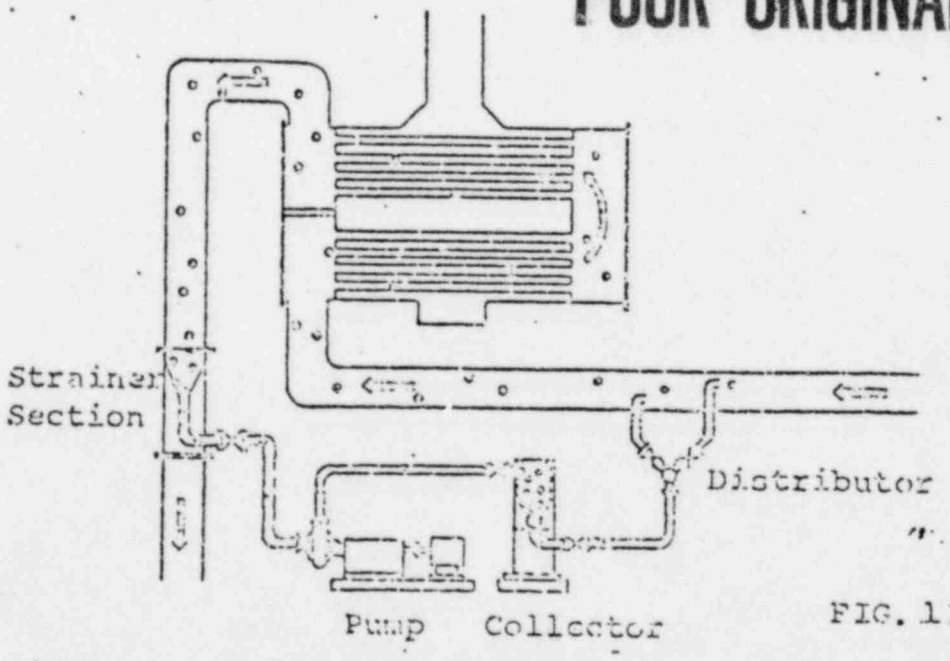

FIG. 1

Elastic sponge rubber balls or abrasive balls with oversize in comparison to the inner tube diameter are injected into the cooling water flow and are forced through the condenser tubes by the natural differential pressure between inlet and discharge of the condenser. A special screening device, the "Strainer Section", installed in the discharge line routes the balls together with a small quantity of cooling water through the recirculating unit to the condenser inlet pipe thus completing the cycle.

The recirculating unit consists of a non-clogging centrifugal pump, required to overcome the pressure loss across the condenser and the interconnecting ball transport piping, and the collector, a device for trapping the balls for purposes of checking the number and oversize of the balls, backwashing the screens or removing the unit from operation.

To achieve good distribution of the balls over the condenser tube sheet, the balls are injected into the cooling water inlet pipe counter flow to the main cooling water flow. With larger diameter inlet pipes, several injection nozzles are required. By means of distributors the balls are directed to the individual injection nozzles.

The sponge rubber balls, having specific gravity nearly equal to that of the cooling water for homogeneous distribution throughout the water, are supplied in soft, medium or hard quality. Quality and oversize are chosen according to the available differential pressure so that longest ball life and optimum cleaning of the tubes are achieved. The ball charge is chosen in a way that each tube receives a ball on an average of every 5 minutes.

POOR ORIGINAL

For cleaning heavily fouled, scaled or pitted condenser tubes, abrasive balls are used which are sponge rubber balls with an adherent surface coating of abrasive material.

Worn balls with no oversize are singled out by means of a ball sizing gage and are discarded weekly.

The pressure drop across the strainer section does not exceed 6" WC at normal flow velocities with clean screens. On increased differential across the screens due to debris build-up, back-washing is possible by turning the screens against the cooling water flow. For purpose of backwash control differential pressure manometers are provided.

The correct operation position of the screens is indicated by means of position indicators which actuate limit switches.

DESCRIPTION OF THE EQUIPMENT

STRAINER SECTION

The strainer section, as shown in Fig. 2, is divided into quadrants, with two upper channels and two lower ones. The upstream portion consists of eight upper screens. These upper screens direct the balls into the lower or downstream portion of the strainer pipe. The downstream portion of the pipe contains eight rectangular screens which funnel the balls to the ball extraction tubes. Balls which are extracted from the lower sector pass through the collectors and are then injected into the inlet pipe.

An airfoil section is installed above and a throttle flap below the lower channel of each sector to improve and control the flow conditions within the strainer section. To obtain optimum ball circulation adjustments to the throttle flaps must be made when the system is first placed in operation. Once established, the proper position for the throttle flaps is fixed by means of the locking handles.

At the inlet of the lower channels, shut-off flaps are installed. Operation of these flaps allows the return of balls trapped on the lower screens by debris and removal of debris without backwashing the screens. Fouling of the screens due to debris build-up can be cleared by closing the flaps. This prevents water from entering the lower channels. As the main cooling water pumps maintain suction, the flow of water through the lower screen is reversed, releasing the debris which is then removed through the ball extraction tubes.

The correct operating position of the screens is indicated by means of position indicators. The position indicators may be used for actuating limit switches for visible indication or automatic control purposes.

POOR ORIGINAL

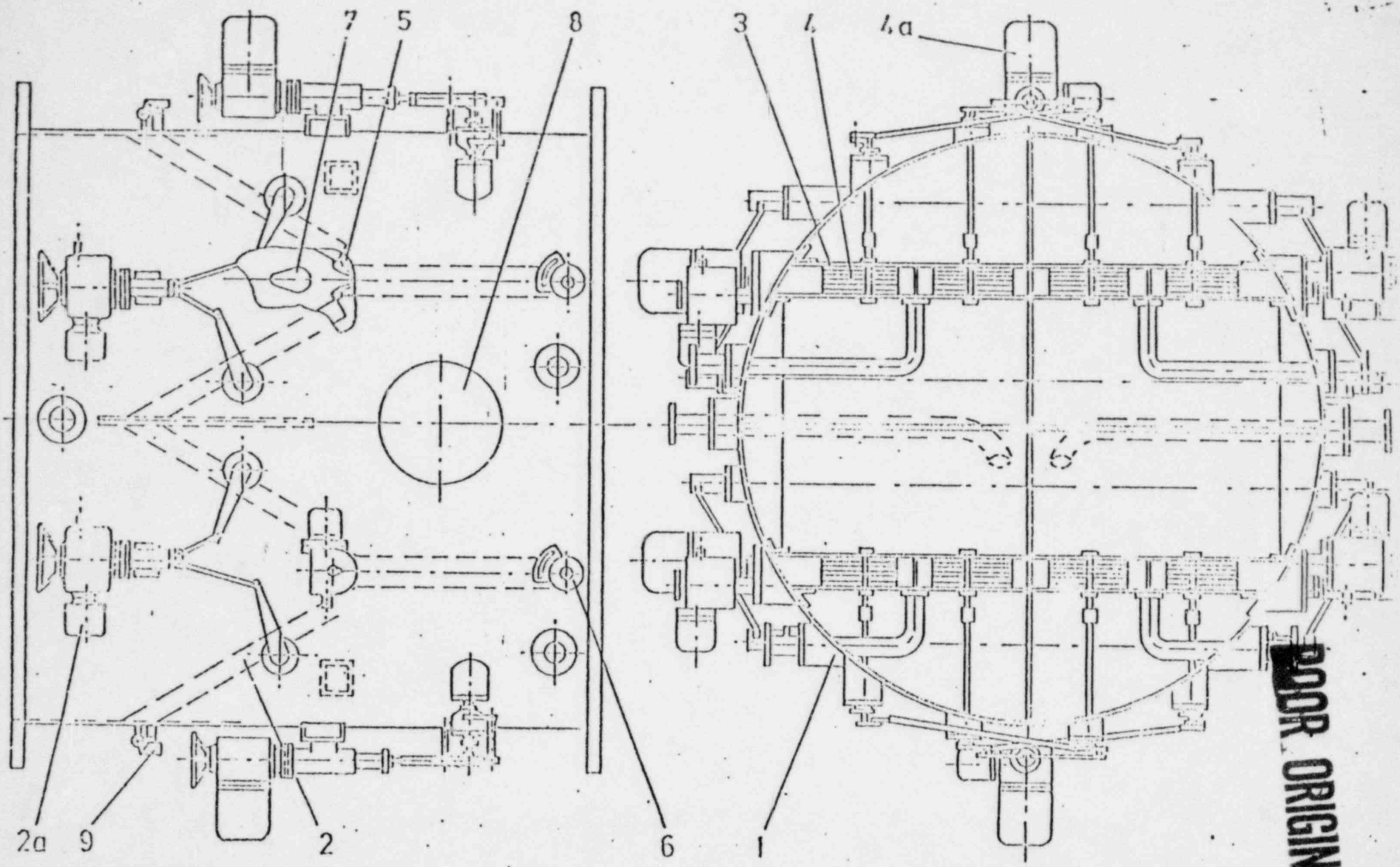

POOR ORIGINAL

FIG. 2

1. Strainer Section
2. Upper Screen
2a. Upper Screen Control
3. Lower Channel
4. Lower Screen
4a. Lower Screen Control
5. Upper Control Flap
6. Lower Control Flap
7. Airfoil Section
8. Manhole
9. Position Indicator and Limit Switch

RECIRCULATING AND REINJECTION PUMP

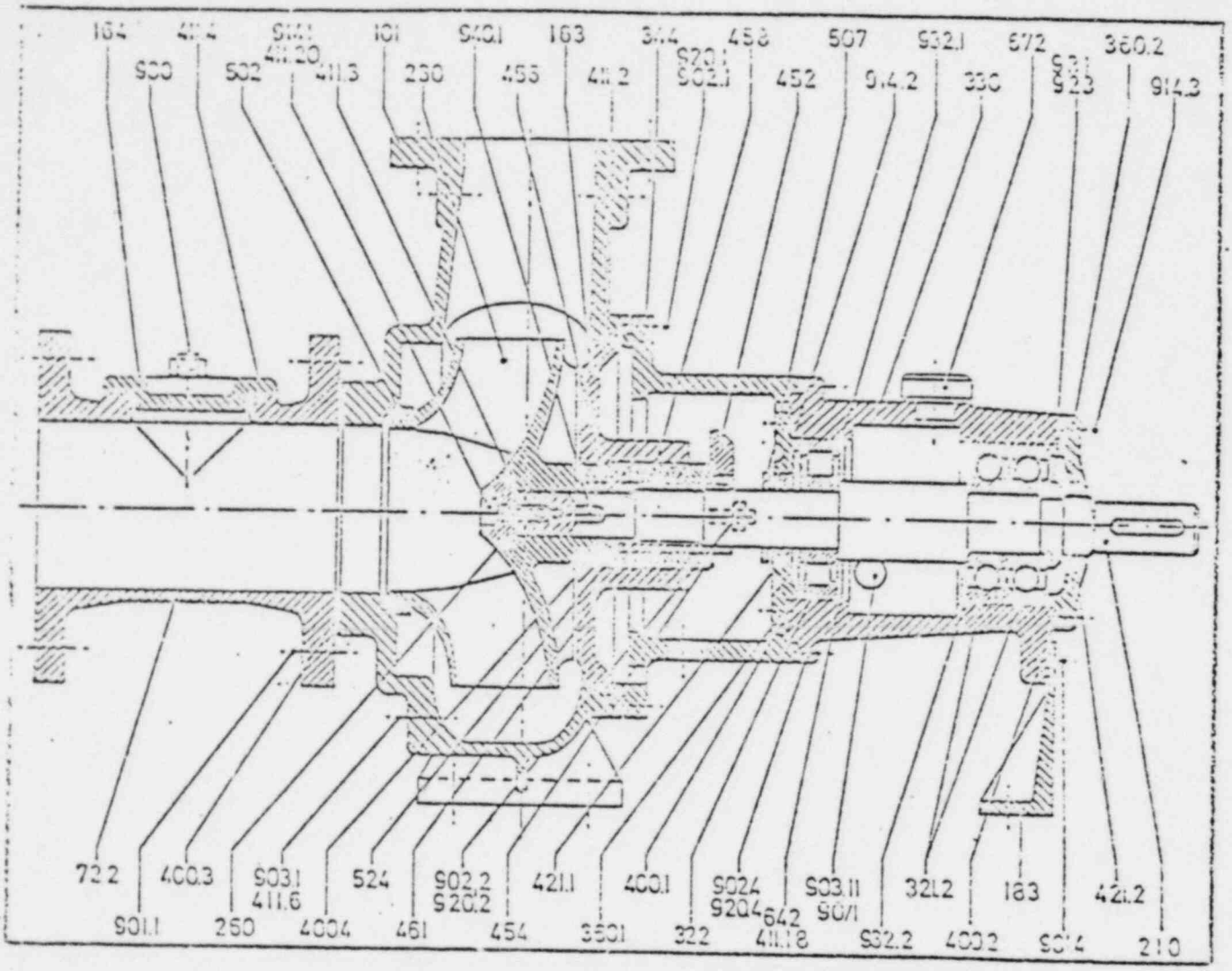

The recirculating pump as shown on Fig. 3 is used for transporting the balls from the ball extraction tube of the strainer section to the condenser inlet line.

The pump is a non-clogging type centrifugal pump with wide clearance between impeller and housing to prevent damage to the balls. The head of the pump is high enough to overcome the pressure loss across the condenser and the interconnecting piping.

The same type of pump is used for extracting the balls from the top portion of the horizontal strainer section for reinjection into the bottom portion ahead of the upper screens. The head of the reinjection pump is lower than the head of the recirculating pump as this pump has only to overcome the pressure loss across the interconnecting piping.

POOR ORIGINAL

COLLECTOR

The collector as shown in Fig. 4 is sealed at the top by a sightglass cover which can be removed for purposes of recharging and checking the balls. The upper part of the collector column contains a perforated basket and the ball catching flap; a three way valve.

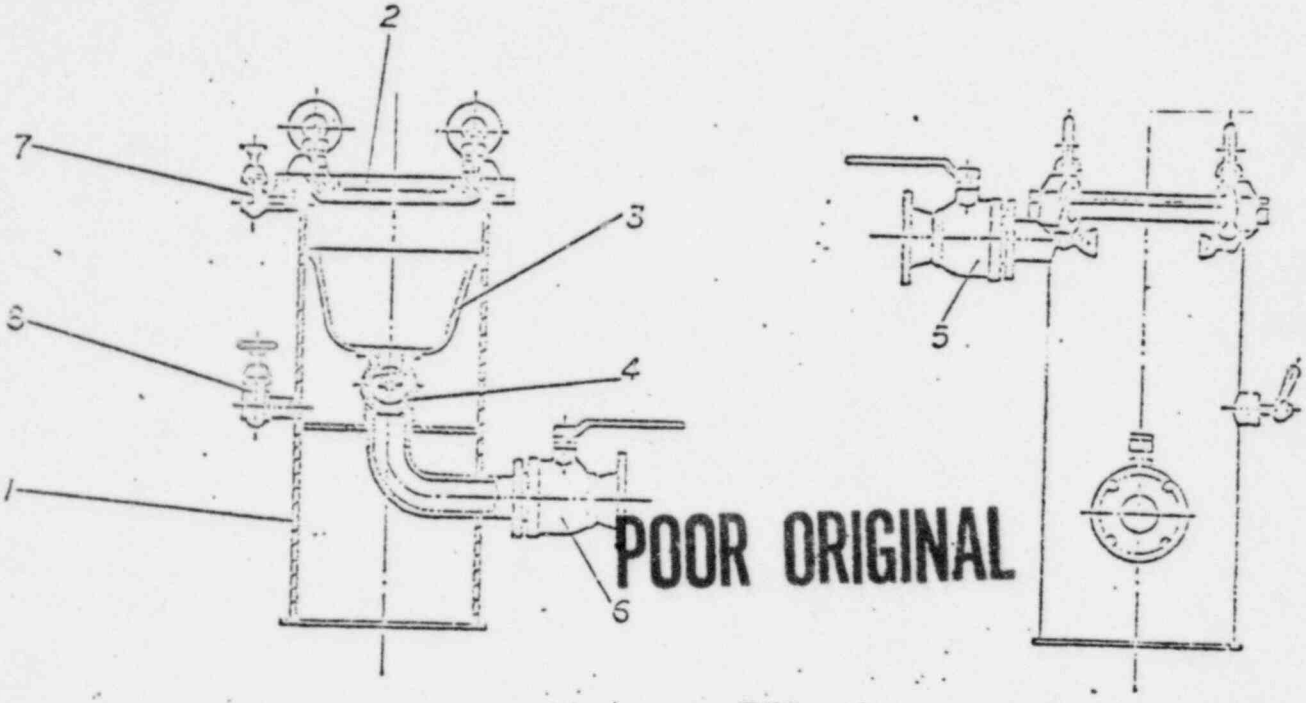

POOR ORIGINAL

FIG. 4

1. Casing
2. Cover with Sightglass
3. Basket
4. Ball Catching Flap
5. Inlet Valve
6. Discharge Valve
7. Vent Valve
8. Drain Valve

By closing the ball catching flap the balls are trapped in the perforated basket while the water flows through the perforations and the side part of the catching flap back into the condenser inlet. The ball valves at the inlet and discharge of the collector are provided for interruption of the water flow through the collector for checking and recharging the balls.

During normal ball circulation, water and balls are pumped straight through the collector with the ball catching flap as well as the inlet and discharge ball valves in the open position.

For venting and draining of the collector, valved connections are provided.

DIFFERENTIAL PRESSURE MANOMETER

The differential pressure manometer shown in Fig. 5 is a corrosion resistant model of leakproof construction. It is a bellows operated manometer with local indication and two alarm contacts. The alarm contacts can be easily set to desired positions externally. There is also a visual indication on the scale of the alarm settings. Bellows motion is carried out through a torque tube, insuring maximum power transmission, and smooth, frictionless response to changes in the differential pressure. A built in compensation corrects for changes in ambient temperature. The manometer is designed with two opposing stainless steel bellows which are enclosed in seperate pressure-tight chambers and connected by a common center shaft. When different pressures are applied to the two chambers, the bellows on the high-pressure side will contract, thus causing the bellows on the low-pressure side to expand. Motion of the bellows assembly is transmitted through the torque tube to the associated indicator.

The arrangement of the manometer in connection with an air-purge system is shown in Fig. 5a. The vacuum in the condenser discharge will suck in atmospheric air which can be controlled by needle valves. Equalizing of the air flow through both impulse lines is accomplished by adjusting the air flow with the needle valves until the manometer reads zero with the screens in the backwash position.

If the screens are in a clean condition the differential pressure should not exceed 6" WC. This will increase with fouling. The screens are to be backwashed after catching the balls if the differential pressure reached 10" WC. When the differential pressure reaches 20" WC the screens are to be backwashed immediately without catching the balls as damage to the screens may otherwise occur. The control contacts which may be used to actuate visible and audible warning devices or for automatic control are set accordingly.

POOR ORIGINAL

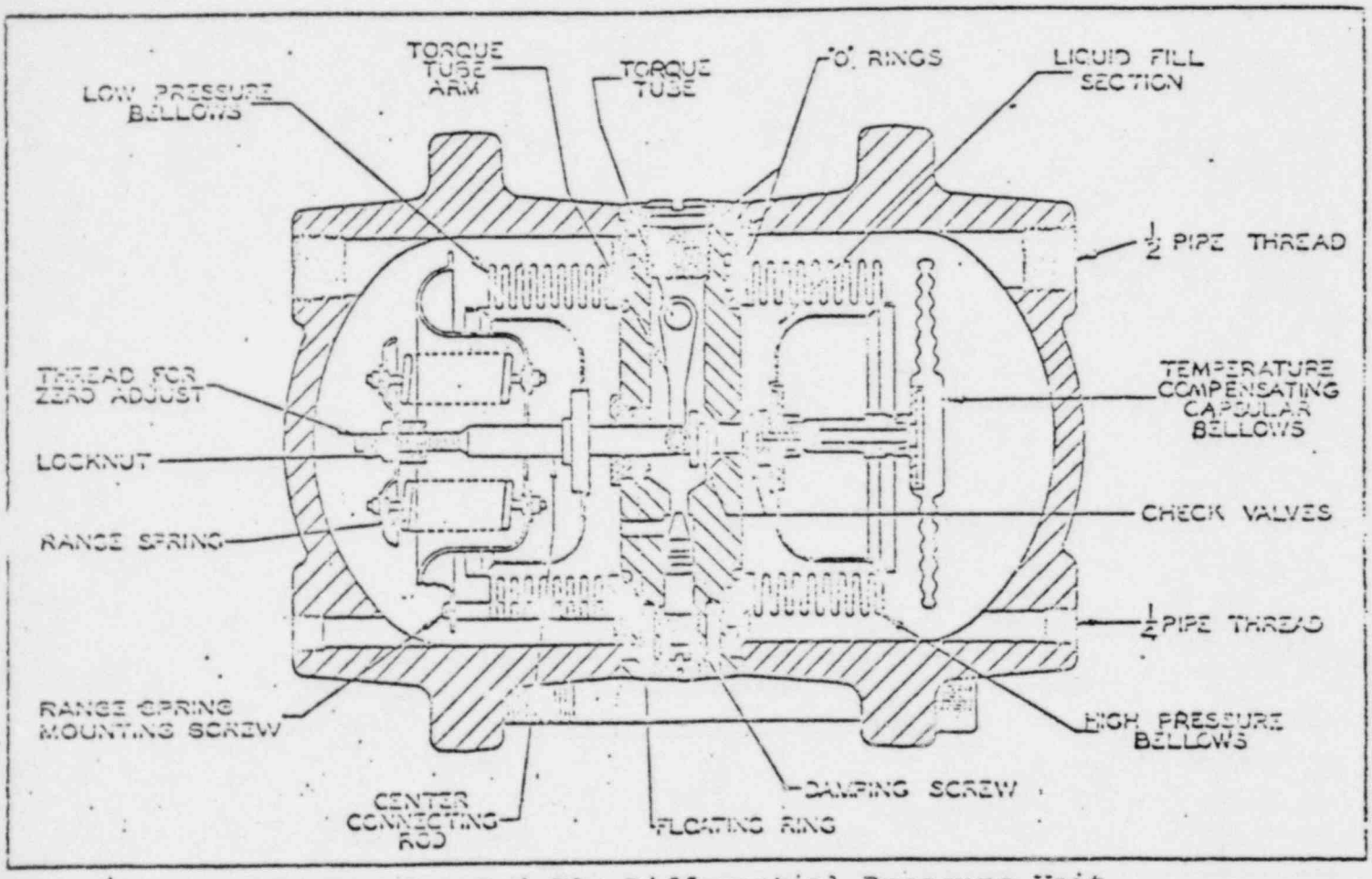

Figure 5. Dri-Flo Differential Pressure Unit.

POOR ORIGINAL

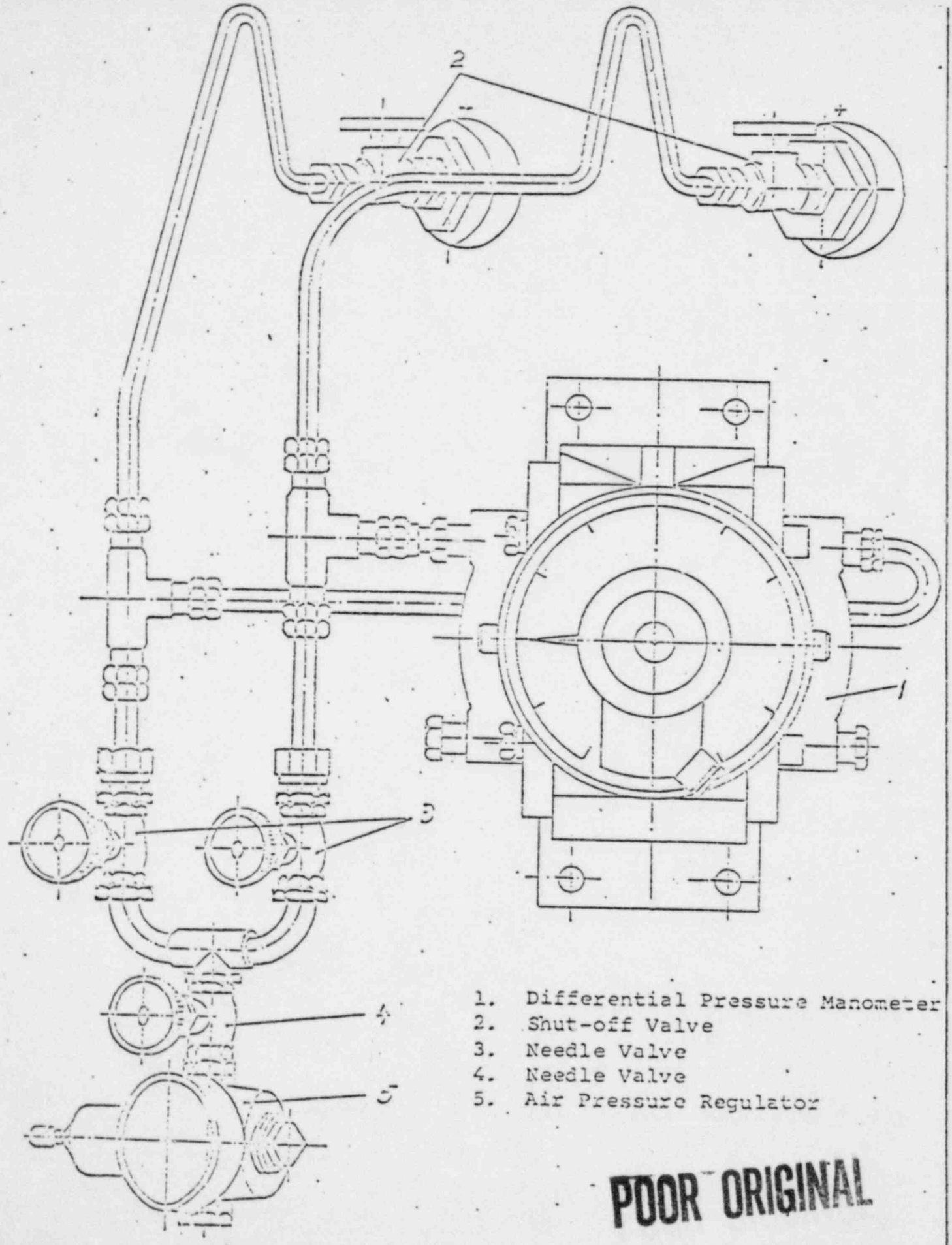

1. Differential Pressure Manometer
2. Shut-off Valve
3. Needle Valve
4. Needle Valve
5. Air Pressure Regulator

POOR ORIGINAL

Figure 5A

DISTRIBUTOR

The distributor as shown in Fig. 6 is used to combine the ball extraction lines from the strainer section into a single line which

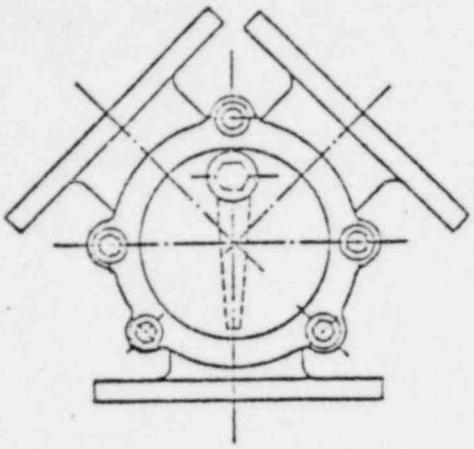

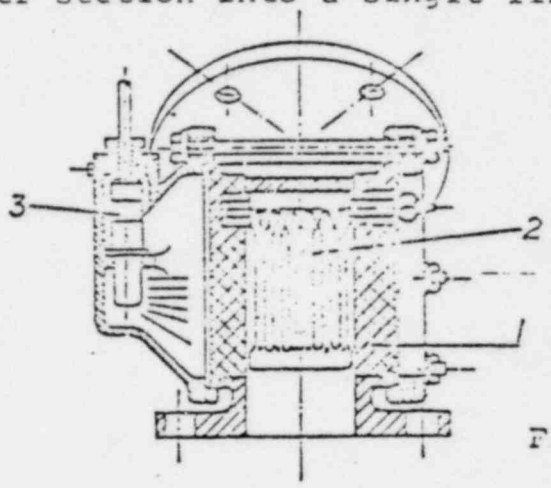

FIG. 6

1. Sightglass
2. Adjustable Vane
3. Illumination

feeds the recirculating pump. The distributor is also used to divide the ball injection line to obtain better ball distribution at the condenser inlet.

An adjustable vane is provided to equalize the ball flow through the individual lines. The ball flow may be observed through the distributor sightglass which is illuminated by a lamp.

BALL GAGE

The ball gage, shown in Fig. 7, is used for checking the balls. Balls which are worn down to the diameter of the condenser tubes

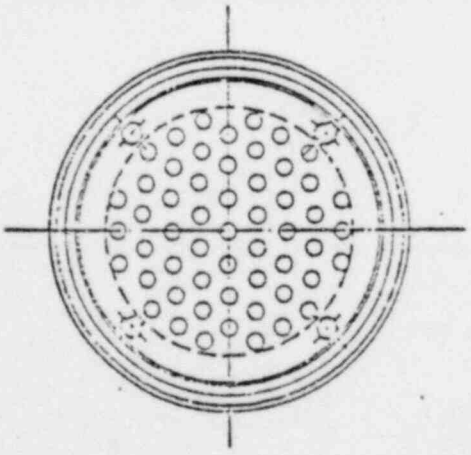

POOR ORIGINAL

FIG. 7

are ineffective and must be removed from circulation. The ball gage has holes equal in diameter to the inside diameter of the condenser tubes.

IV. OPERATIONAL DESCRIPTION

GENERAL DESCRIPTION OF AUTOMATIC CONTROL SYSTEM

The AMERTAP Electric Control System consists of a combined AMERTAP Control and Mimic Panel with push button stations for automatic operation of the AMERTAP Condenser Tube Cleaning System. Integrated automatic control of all electrical system components is provided for by the selector switch located on the mimic panel. Manual control of each component is possible from the AMERTAP Mimic Panel by means of push buttons. The AMERTAP Control and Mimic Panel contains motor starters, fuses, relays, timers, push buttons and indicating lamps.

AUTOMATIC OPERATION OF THE AMERTAP SYSTEM

Refer to Appendix "A" for Graphical Sequences of Operation and Appendix "B" for Suggested Timer Settings.

3.1 System Start-up with Selector Switch

POOR ORIGINAL

Prior to starting the equipment, ascertain that the proper ball charge, approx. 2500, has been placed in each collector and that the interconnecting piping and collectors are full of water with drain and vent valves closed. The green "Out of Service" lamps on the AMERTAP Control Panel should be illuminated as well as the green "Pump," red "Upper Screens", red "Lower Screens", red "Shut - off Flaps," green "Collector Inlet Valve," and green "Ball Collecting Flap" lamps located at the AMERTAP Mimic Panel. Place the Selector Switch in the "Auto" Position. The green "Out of Service" lamps will be extinguished, the red "In Service" lamps will blink on and off, and the pumps will start with green "Pump" lamps being extinguished and red "Pump" lamps being illuminated. The collector inlet valves will open with green lamps being extinguished and red lamps being illuminated, followed immediately by sequential opening of the ball collecting flaps with green lamps being extinguished and red lamps being illuminated. At this point the system is in service. The red "In Service" lamps on AMERTAP Control Panel will cease blinking and remain on.

Should the system fail to proceed through the prescribed sequence within a pre-determined period of time (Timer No. 5) due to malfunction, the "Failure" lamps on the AMERTAP Mimic Panel will be illuminated and the alarm horn will sound. The horn may be silenced by depressing the "Failure Reset" button located on the AMERTAP Mimic Panel. Placing the Selector Switch in the "Manual" position clears the "Failure" indication and allows the malfunction to be traced and corrected with the system under manual control as outlined in 4, below.

NOTE: TIMER NO. 5 MUST BE ADJUSTED TO PROVIDE A TIME DELAY LONGER IN DURATION THAN THE TIME REQUIRED FOR ANY ONE MOTOR OPERATED COMPONENT TO COMPLETE ITS CYCLE.

When the fault has been corrected, the system may be returned to automatic control by means of the Selector Switch.

Shut-Down System with Selector Switch

Shut-down of the system can be accomplished by placing the Selector Switch in the "off" position. The red "In Service" lamp will be extinguished and the green "Out of Service" lamp will blink on and off. The ball collecting flaps will close with indication changing from red to green. Following a timed interval (Timer No. 1) of 3 to 120 minutes, the shut - off flaps close with indication changing from red to green for a timed interval (Timer No. 2), of 1/2 to 3 minutes. Following timeout of Timer No. 2, shut-off flaps open with the indication changing from green to red. Timer No. 3 provides 1/2 to 3 minute interval after which the collector inlet valves close with corresponding indication changing from red to green. This is followed immediately by stopping of recirculators and indication change for recirculators from red to green. The system is now out of service with green "Out of Service" lamps on AMERTAP Mimic Panel remaining on.

Failure of the system to proceed through the prescribed sequence within a pre-determined period of time will cause the "Failure" lamp to be illuminated and the horn to alarm.

Normal Backwash

Provisions are made for automatic backwashing of the strainer section screens, should a debris build-up on the screens result in a pressure differential across the screens of 10" water column. At 10" water column differential across the strainer section with the system in service, the red "Normal Backwash" lamps on the AMERTAP Mimic Panel will start to blink on and off and the red "In Service" lamps will be extinguished. The system completes the shut-down sequence of 3.2 above, through time-out of Timer No. 3. The upper and lower screens located in the strainer section now open with red lamps being extinguished and green lamps being illuminated. The red "Normal Backwash" lamps on the AMERTAP Mimic Control Panel remain on continuously from

POOR ORIGINAL

opening of the screens and throughout the timed backwash interval of 3 to 10 minutes (Timer No. 4). Following time-out of Timer No. 4, upper and lower screens close with corresponding lamps being extinguished. The system now restarts with sequential opening of the ball collecting flaps per 3.1 above. During actual backwashing of screens, the pumps remain on and the collector inlet valves remain open.

Normal backwash protection is also provided when the system is out of service. In this case, a 10" water column differential will cause Timers 1 - 3 to cycle with subsequent opening and closing of upper and lower screens controlled by Timer No. 4.

Emergency Backwash

Should a heavy influx of debris cause a rapid rise in pressure differential across the strainer section screens of 20" water column or more, the emergency backwash sequence is initiated with sounding of the alarm horn located at the AMERTAP Mimic Panel and illumination of the red "Emergency Backwash" lamp on the AMERTAP Mimic Panel. The alarm horn may be silenced by means of the "Horn Reset" button on the AMERTAP Control Panel. The upper and lower strainer section screens open immediately with corresponding screen position lamp change from red to green on the AMERTAP Mimic Panel. Simultaneously, and if the system is in service, the shut-off flaps open; if closed, the ball collecting flaps and collector inlet valves close followed immediately by shut-down of the pumps and the system. The screens remain open for a period of three to ten minutes as determined by Timer No. 4. Following time-out of Timer No. 4, the screens close, the screen position indication changes from green to red, and the "Emergency Backwash" lamps are extinguished. The system remains out of service with the red "Blocked" lamp illuminated on the AMERTAP Mimic Panel. To restart the system, it is first necessary to check the supply of balls in the collectors, and ascertain that the system is ready for start-up per 3.1 above. The "Blocked Reset" button is then depressed allowing the system to start. Emergency backwash protection is also afforded when the system is out of service or under manual control. In both cases, the upper and lower screens open immediately with closing of the screens effected by Timer No. 4. Restart of the system follows the sequence outlined above.

CAUTION AS EMERGENCY BACKWASH IS POSSIBLE WHEN THE SYSTEM IS OFF OR UNDER MANUAL CONTROL, CARE MUST BE EXERCISED BY MAINTENANCE PERSONNEL WHEN WORKING ON OR NEAR MOTOR OPERATED COMPONENTS.

MANUAL CONTROL

For purposes of maintenance or testing, manual control of each system component is possible from the AMERTAP Mimic Panel. Mimic Panel Control is selected and the Selector Switch is placed in "Manual" position. Control of the recirculators, upper screens, lower screens, shut-off flaps, collector inlet valves and ball collecting flaps is now accomplished by means of the individual push buttons on the AMERTAP Mimic Panel.

APPENDIX A

SYSTEM FACT SHEET

1. 2500 Amertap Ball (Non-Abrasive) per loop.
2. Local Controls.
3. Can be shut down for maintenance without affecting plant operation.
4. Recirculation pump puts balls to condenser inlet, Re-injection pump puts balls to the Lower Screen Section for collection to recirc. pp.
5. Reinjection pump head less than that of recirculation pump.

APPENDIX B

INTERLOCKS

1. Timer settings applicable.
2. 10" H20 setpoint for Normal Backwash.
3. 20" H20 setpoint for Emergency Backwash.

APPENDIX C

IMPORTANT PARAMETERS

1. 10" H2O DP initiates Normal Backwash.
2. 20" H2O DP initiates Emergency Backwash.

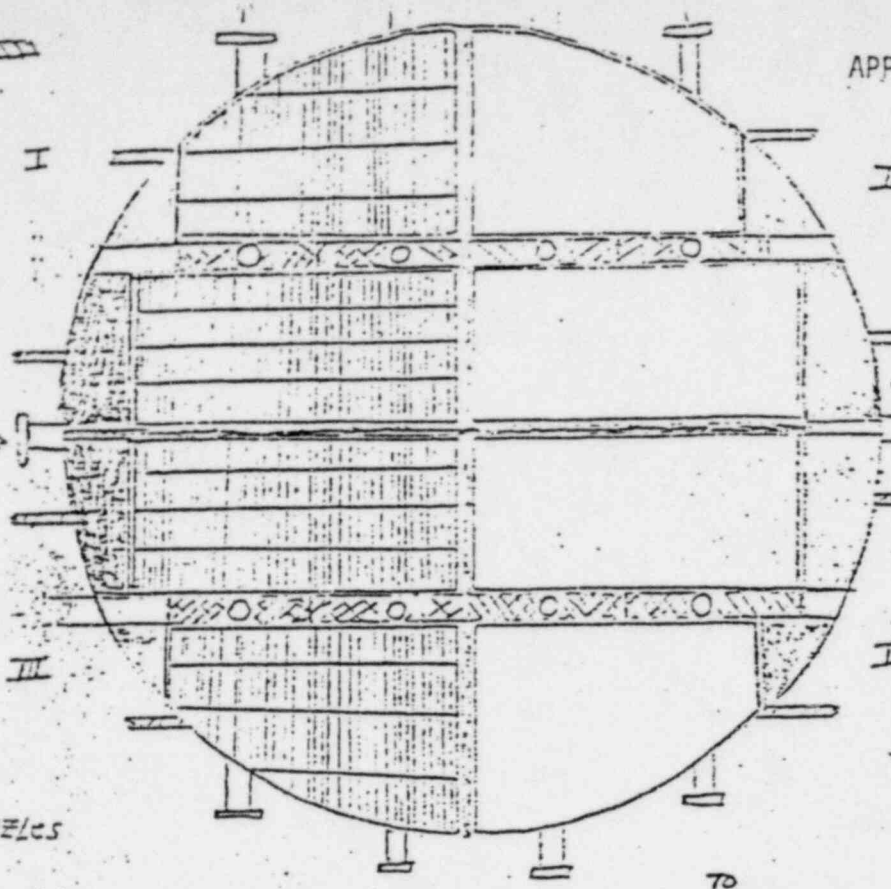

a+b – LOWER MAIN SCREENS
a'+b' – UPPER MAIN SCREENS
c – AIR FOIL
D – REINJECTION NOZZLES
e – SHUTOFF FLAP
f – THROTTLE FLAP
G – SECONDARY SCREENS
h – BALL EXTRACTION TUBE

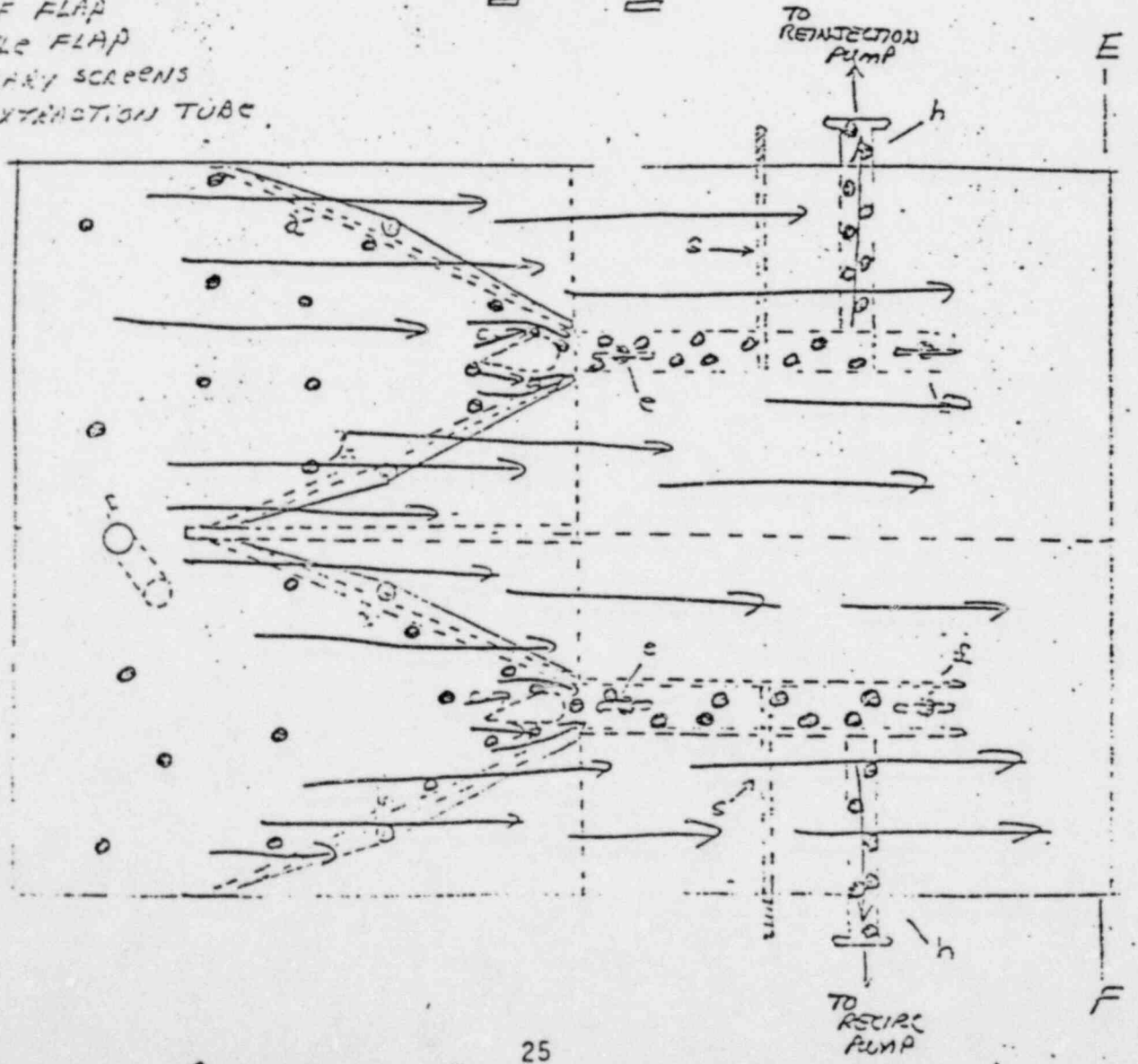

Unit 2 15KVA INVERTER

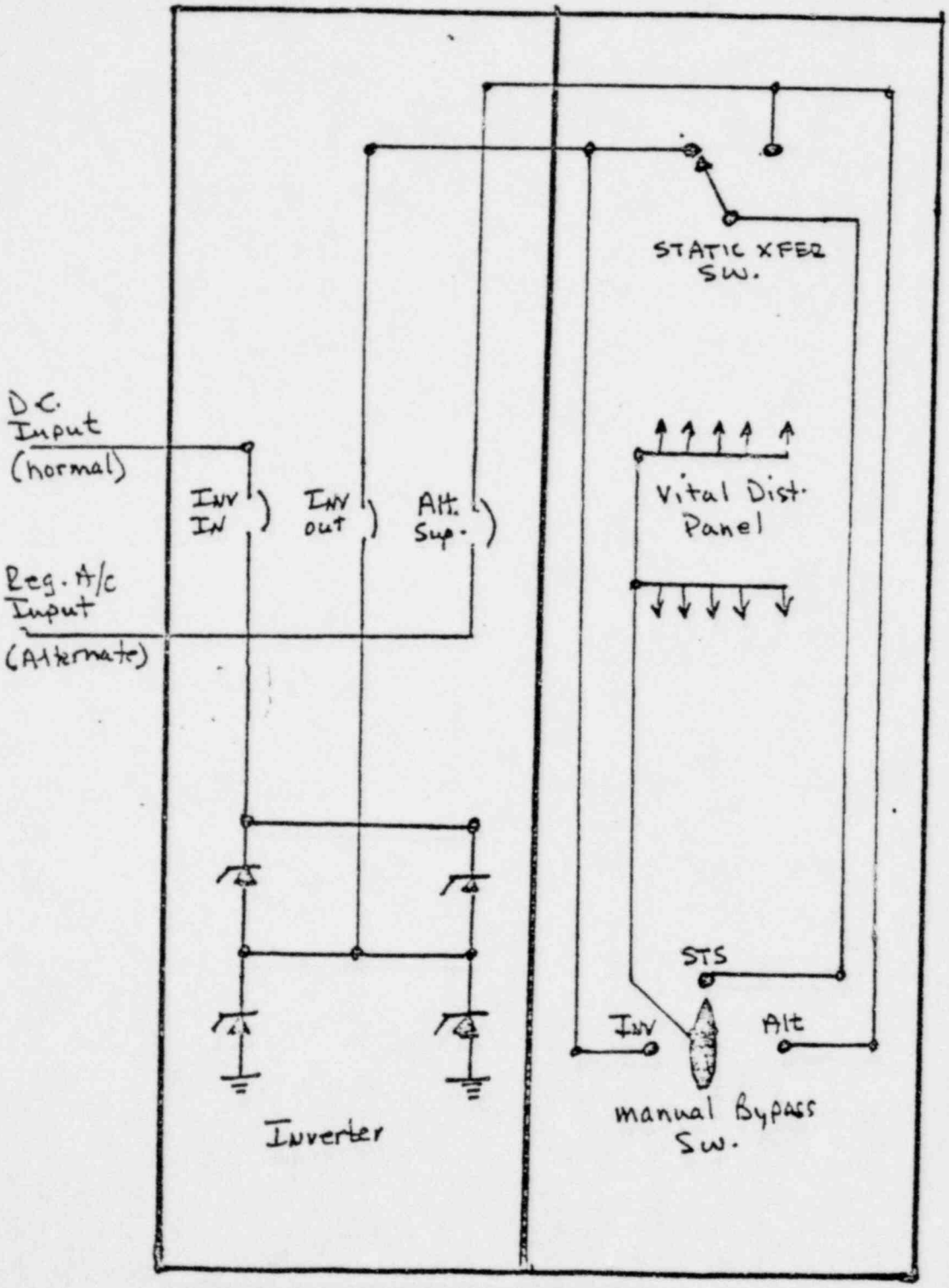

Discussion: As a result of test conducted at the TMI-site by GPU Start-Up personnel on the vital supply equipment, three items of concern were identified, two of which were then judged to be reportable incidents. These items became the subject of field questionnaires 1337 and 1647.

The subject of this meeting was to discuss these items with SCI, the equipment manufacturer, and establish the required line of action to take towards the resolution of these three problems:

Problem 1

During tests conducted at the site, the static switch did not transfer back to the inverter from the alternate supply when the inverter output voltage was restored, after a simulated low voltage condition at the output of the inverter.

At the test conducted at the site, the output voltage of the inverter was purposely reduced so that a transfer from the inverter to the alternate supply would take place.

B&R Spec. 2555-35, page TS-2, requires that:

> "...A 15 kva single pole static switch shall be furnished with each inverter to automatically transfer the vital power bus to a regulated voltage bus in the event of inverter failure or any other malfunction which causes its output voltage to drop below or its output frequency to drop below or exceed the pre-set values within the limits specified in 3.3..."

Paragraph 3.3 states:

> "The inverter steady state output voltage shall be held within a band of plus or minus 3% of the set value. Transient response for a step change in load of 100% shall not exceed -24% + 10% for 8 milliseconds.
>
> The inverter output frequency shall be held within a band of plus or minus 1% of 60 Hz..."

The test conducted at the site indicates that the output voltage of the inverter has to be decreased well beyond the 3% limit (down to 38 volts) before a transfer from the inverter to the alternate source can take place.

Mr. Bratton stated that the equipment, as presently designed, cannot be set to transfer just below the 3% limit because unnecessary transfer to alternate supply will take place every time a relatively large load is connected on the inverter. He explained that the high transient generated, at the time, will cause the output voltage to temporarily fall below the 3% limit, at which time, the static switch will transfer the load to the alternate supply. Since this is undesirable, the transfer voltage setting was set quite low. He also explained that during the normal operation of the system and due to inverter design, it is virtually impossible for the output voltage to decrease down to any value other than zero for an internal malfunction, since the internal resonant circuit can only be either in resonance (full output) or out of resonance (no output). It was agreed, however, that a sensing board would be added to the system to detect the fact that the output voltage had fallen just below the 3% limit and cause a transfer to the alternate supply. The static switch would remain on the alternate supply unless the inverter output is restored back to normal, at which time the transfer back to the inverter would take place. A time delay feature will be incorporated in this new board to override transients that might temporarily drop the voltage output below the 3% value.

In order to avoid the possibility of a transfer to the alternate supply due to very high transients, the setting of the existing V107A board will remain low (50% of the normal voltage).

This modification will bring the equipment in line with the exact requirements of the specifications. Mr. Bratton also indicated that, in his opinion, the equipment as presently designed does meet the requirements of the specifications since it is possible, without any new modifications, to increase the transfer voltage setting to ±3% and cause a transfer as required by the specifications. However, a transfer would also take place during temporary dips in voltage due to transients.

Problem 2

At the test conducted at the site, a transfer from the inverter to the alternate supply was observed only after the inverter output voltage was decreased (with a variac) to 38 volts. After awhile, the voltage was then restored to its normal level, but a transfer back from the alternate supply to the inverter did not take place.

B&R specifications state that:

> "...Upon restoration of the inverter output voltage and frequency to its preset values for an adjustable period of time, the static switch shall automatically retransfer the vital power bus to the inverter."

It further states that:

> "The length of time during which the inverter output voltage and frequency must remain steady at preset values after recovering from a power outage or an abnormal condition before transferring back to the inverter shall be adjustable over a time period of 2 to 10 seconds."

Mr. Bratton explained that the retransfer from the alternate supply back to the inverter did not take place because the built-in timer had long since timed out. As presently designed, whenever a transfer from the inverter to the alternate supply takes place, the timer will automatically start running. One attempt will be made by the static switch to go back to the inverter within the time setting of the timer. If due to persistent abnormal conditions at the inverter output the retransfer to the inverter does not take place within the set time, the static switch will stay on the alternate supply until it is manually reset.

Mr. Bratton further explained that for reasons explained above in Problem 1, i.e.; the resonant circuit will either be in resonance or out of resonance, and for other design conditions, it is not only unlikely that such abnormal conditions would occur at the output of the inverter but that in case a malfunction did occur, this malfunction would be of such a nature (i.e.; blown fuse, burnt components, etc.) that it would not fix itself within the few seconds that the timer is allowed to run.

It would be thus preferable to make only one attempt to retransfer to the inverter and that if the retransfer did not take place within the set time, then the static swtich would remain permanently on the alternate supply. Since this is an acceptable mode of operation, and since it would be extremely difficult and very disruptive at this time to make the necessary modifications to make the equipment to strictly conform with the specification paragraphs quoted above, it was decided that such paragraphs will be revised to more closely describe the existing mode of operation.

Problem 3 (F.Q. 1337)

The vital power supplies have a circuit which causes the inverter and output to stay "in sync" with the alternate power source. The inverter will stay "in sync" even when the frequency drops on the alternate source, such as during diesel generator loading. The inverter will stay in sync with the alternate source until the frequency dips below 59.3 Hz. Below 59.3 Hz, the inverter oscillator is allowed to free run at 60 Hz.

The power supplies also have a circuit which causes the load to be transferred to the alternate source if inverter frequency drops to 59.4Hz. The load will automatically transfer back to the inverter after a time delay, if inverter output is normal.

The feeder breakers for the alternate source have a shunt trip actuated by an SFAS signal.

The above arrangements could cause the vital power to be interrupted during the following sequence of events:

> During a loss of offsite power without an SFAS signal, the diesel would go on the E.S. bus and start taking loads in sequence. Due to frequency dip of the diesel generator power during loading, the vital power could transfer to the alternate source. The vital power loads would stay on the alternate source until after the time delay for retransfer. If an SFAS signal occurred during the time the vital loads were on the alternate source, the vital power would be interrupted until the auto-retransfer time delay was completed.

In order to avoid such a possibility, it was agreed that the frequency transfer function will be deleted but it will be used to provide an "out of synchronism" alarm. This alarm will be wired to other existing alarms to avoid the running of new cables. In the event of a frequency decay at the alternate supply, the inverter output would automatically disassociate itself from the alternate supply and the vital supply output frequency and voltage would be solely determined by the internal circuit of the inverter.

At an alternate supply frequency of 59.4 Hz an alarm will sound and at 59.3 Hz, the inverter will revert to its original free-running frequency (60Hz) and continue to operate there until the reference source (alternate supply) returns to it normal value, at which time synchronization will again take place.

The solutions arrived at, for problems 1 and 3 will require both hardware and drawing changes. The solution for problem 2 requires specification changes.

Mr. Bratton indicated that since this equipment is already out of warranty, additional charges would be necessary to implement the required modifications.

Prepared by For [signature]
Luis Diaz

Approved by [signature]
John P. Cady, Jr.

JPC/LD/fap

cc: R.W. Heward, Jr., GPU (2)
R.C. Arnold, Met Ed
J. Herbein, Met Ed Site (2)
E.C. Nagle, UE&C, (2)
W.T. Gunn, GPU Site (2)
R.L. Wayne, GPU
J.A. Smith, GPU
J. Kunkel, GPU
S. Levin, GPU
G. Steuerwald, GPU
R. Toole, GPU
I. Porter, GPU
R. Struther, GPU
J.E. Wright, GPU QA Site
M. Stromberg, GPU QA Site
D. Bratton, SCI
N. Metzger, SCI

DIESEL GENERATORS AND AUXILIARIES

UNIT II

(from 2A, 2B or Unit #1)

(8) 3 feeder breakers open (2A, 2B or Unit #1)

b. Manual

(1) Must be racked in

(2) No 86 lock out on generator breaker

(3) Energize sync selector

(4) Sync check satisfied

(5) No 86 over current lock out on three feeders

(6) 69 switch in normal

(7) Close breaker

2. Tripping Sequence

a. Auto

(1) One of three 86 lock outs for generator breaker

(a) Neutral over current or loss of excitation

(b) Phase Differential Current

(c) Reverse Power and over current

(2) Exciter Shutdown

(3) 86 over current lock out for normal feeder breaker. (Used when diesel is in parallel with bus.)

b. Manual

(1) Open breaker

(2) 69 switch to trip

B. Diesel Generator Trips

1. Over Speed

2. Two of three low lube oil pressures.

3. Two of three crank case high pressure.

4. Start failure (cranking time of seven seconds and not at a 250 RPM or 6 PSIG oil pressure.)

5. 86 lock out on bus

NOTE: All these trips are in effect even during E.S. Actuation. These trips

DIESEL GENERATORS

I. OBJECTIVES

A. Know the purpose of the Emergency Diesel Generators.

B. Know the location of components.

C. Be able to discuss diesel generator operation, control, interlocks and tech specs.

II. SYSTEM FUNCTION

A. To provide a source of emergency electrical power to safely shut down the plant and cool it down.

III. BASIC DESCRIPTION

A. Super turbocharged 12 cylinder opposed piston engine.

1. Engine driven positive displacement blower.

2. Exhaust gas turbine driven centrifugal blower.

3. No engine valves.

4. Two crank shafts connected by vertical drive unit.

B. Generator: 4160 V 3 phase 60 Hz

1. 3000 KW continuous

2. 3330 KW for 30 minutes

C. Emergency Diesel Governor

1. EG governor consists of three separate parts, a control box, a speed setting potentiometer and a hydraulic actuator.

a. Control box is used to control the hydraulic actuator. The control box is programmed to preset speed and load sharing levels in proportion to engine capacity. It has speed and load sensing sections.

b. Speed setting potentiometer - A DC driven potentiometer is used to

(from 2A, 2B or Unit #1)

(8) 3 feeder breakers open (2A, 2B or Unit #1)

b. Manual

(1) Must be racked in

(2) No 86 lock out on generator breaker

(3) Energize sync selector

(4) Sync check satisfied

(5) No 86 over current lock out on three feeders

(6) 69 switch in normal

(7) Close breaker

2. Tripping Sequence

a. Auto

(1) One of three 86 lock outs for generator breaker

(a) Neutral over current or loss of excitation

(b) Phase Differential Current

(c) Reverse Power and over current

(2) Exciter Shutdown

(3) 86 over current lock out for normal feeder breaker. (Used when diesel is in parallel with bus.)

b. Manual

(1) Open breaker

(2) 69 switch to trip

B. Diesel Generator Trips

1. Over Speed

2. Two of three low lube oil pressures.

3. Two of three crank case high pressure.

4. Start failure (cranking time of seven seconds and not at a 250 RPM or 6 PSIG oil pressure.)

5. 86 lock out on bus

NOTE: All these trips are in effect even during E.S. Actuation. These trips

action is required to shut off pump.

4. There are two fuel oil drain tanks.

   a. Dirty fuel oil tank - Located on opposite governor side of engine, collects drops of contaminated fuel from pump and nozzle leaks.

   b. Clean fuel oil tank - A clean fuel oil holding tank, with pump and level switch, collects clean fuel from injector drain headers. The clean oil is pumped back to the day tank.

C. Air Start System

1. The engine starting mechanism includes:

   a. air start control valve

   b. air start distributor

   c. air header

   d. air start check valves

2. The air start control valve is located on governor end on opposite side from controls. When the control shaft lever is moved to the start position a linkage opens the air start control valve. The compressed air then goes into the header which leads to each cylinder air start check valve. Air also passes into the pilot air supply pipe connected to air start distributor. The valves are arranged radially and in cylinder firing order around the air start distributor camshaft. The air entering the distributor forces each valve plunger down and contacts camshaft. So, the pilot valves open in order and admit air to open air start check valves. This, in turn, allows starting air to rush into the cylinders and forces pistons apart and causes crank shaft rotation.

D. Lube Oil System

1. Lube oil system consists of an engine driven oil pump, a full flow oil filter, a cooler, a 3-way temperature control valve, and a full flow straine Also included is a prelube pump.

2. Lube Oil Filter - A pressure gauge with a 3-way gauge cock is provided on th

centrifugal pump circulates jacket coolant through a 15 KW heater and the engine cylinder liner jackets. A branch circuit supplies heated water to the air cooler system to keep it warm as an aid to quick starting. The pumps run continuously whenever the engine is shut down and heater cycles to maintain 90-110°F. There is a low temperature alarm switch at 90°F.

F. Starting Air System

1. Starting air is supplied by motor driven air compressor and a dual drive compressor consisting of an electric motor or diesel engine drive. A pressure switch starts and stops the lead compressor at 225 PSI and 250 PSI the back up compressor at 200 PSI and 250 PSI, respectively.
2. Air receivers - Two 24" x 84" air receivers - Each reservoir supplied enough air for approximately three starts. (Diesel needs approximately 50 ft.^{3} of air per start). Relief valve on receiver set at 255 PSI. There are two solenoid start air valves to admit starting air to engine. There is an alarm if manual upstream air valve is shut. Two low pressur air switches are provided.

G. Jacket Cooling System

1. The engine is cooled by a closed circulating water system.
2. Flow path
   a. A shaft driven centrifugal pump circulates water into both sides of the engine at the exhaust belts. The flow is up through the exhaust belts and into and up through the engine cylinder liner jacket. Flow from the top of the cylinder liner jacket is directed to a temperature control bypass valve and through heat exchanger and back to pump.
3. Controls and Alarms
   a. A 3-way temperature control valve maintains jacket coolant out at 170-185°F.
   b. System shares an expansion tank with the air cooler coolant system

APPENDIX A

SYSTEM FACT SHEET

1. The diesel generators are equipped with the following auto start features.
   a. Undervoltage on 1E and 2E 4KV bus.
      1. Diesel will start and load within 10 seconds.
   b. E.S. signal
      1. Diesel will start but not load.
   c. E.S. signal with 1E or 2E bus undervoltage.
      1. Diesel starts and loads within 10 seconds
      2. Will continue loading by component timers listed on pages 4 and 5
2. The diesel generators will trip on the following signals
   a. Low lube oil pressure
   b. Overspeed
   c. Hi crankcase pressure
   d. If oil pressure is less than 6 psig or RPM less than 250 in 7 seconds after start.
   e. 86 lock out on bus.

APPENDIX C

TECHNICAL SPECIFICATIONS

1. The reactor shall not be made critical unless all of the following requirements are satisfied:
   a. All engineered safety features buses, engineered safety features switchgear, and engineered safety features load shedding systems are operable.
   b. One 6900 volt bus is energized.
   c. Two 230 kv power sources are in service.
   d. One 230 kv bus is in service.
   e. Emergency diesel generators are operable and at least 38,640 gallons of fuel oil are available in the storage tanks.
   f. Unit batteries are charged and in service. Two battery chargers per battery are in service.
2. The reactor shall not remain critical unless all of the following requirements are satisfied:
   a. Two 230 kv power sources are in service and capable of carrying auxiliary power to Unit 2, except as specified in Specification 3.7.2e below.
   b. Both 230/4.16 kv unit auxiliary transformers shall be in operation except that within a period not to exceed eight hours in duration from and after the time one Unit 2 auxiliary transformer is made or found inoperable, two diesel generators shall be operable, and one of the operable diesel generators will be started and run continuously until both unit auxiliary transformers are in operation. This mode of operation may continue for a period not exceeding 8 hours. In lieu of running a diesel generator, a 4160 volt tie from Unit 1 can be placed in service, thus supplying the second of two feeds to the engineered safety features

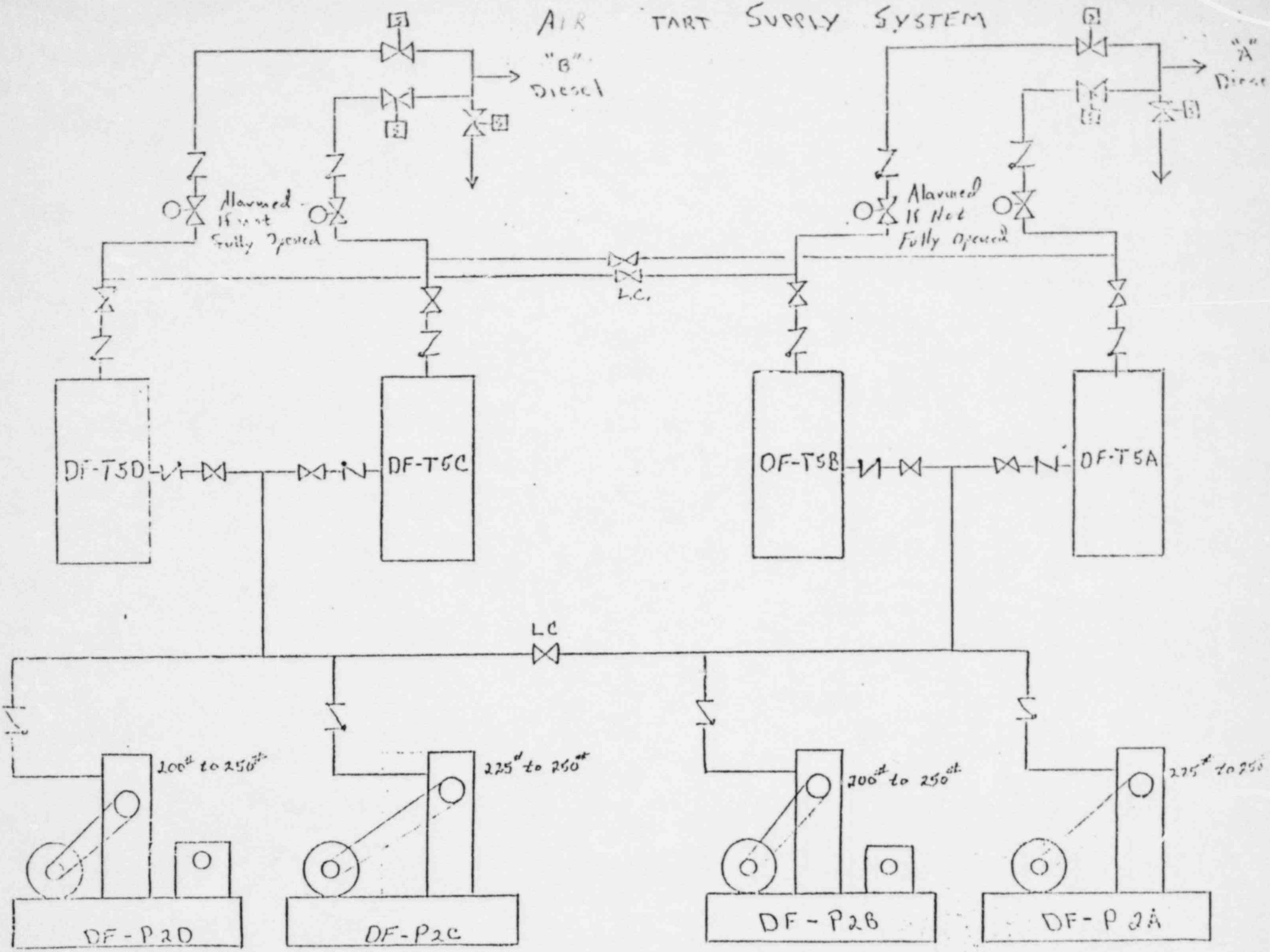
AIR START SUPPLY SYSTEM
"B" Diesel
"A" Diesel
Alarmed If not Fully Opened
Alarmed If Not Fully Opened
L.C.
DF-T5D
DF-T5C
DF-T5B
DF-T5A
LC
200# to 250#
225# to 250#
200# to 250#
275# to 250
DF-P2D
DF-P2C
DF-P2B
DF-P2A

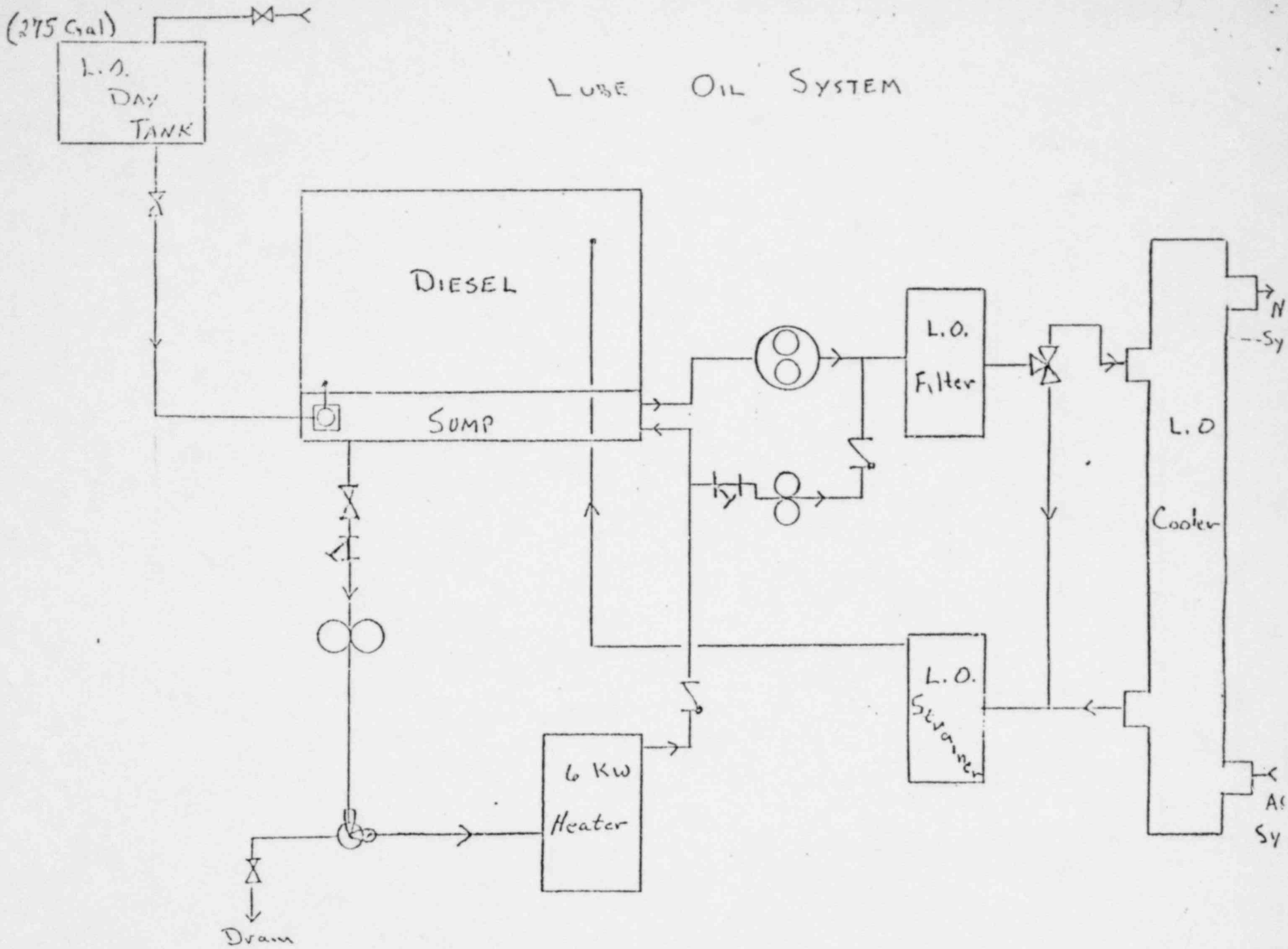
LUBE OIL SYSTEM
(275 Gal)
L.O. DAY TANK
DIESEL
SUMP
L.O. Filter
L.O. Strainer
L.O Cooler
6 KW Heater
Drain
N
Sy
AS
Sy

Jacket Cooling System

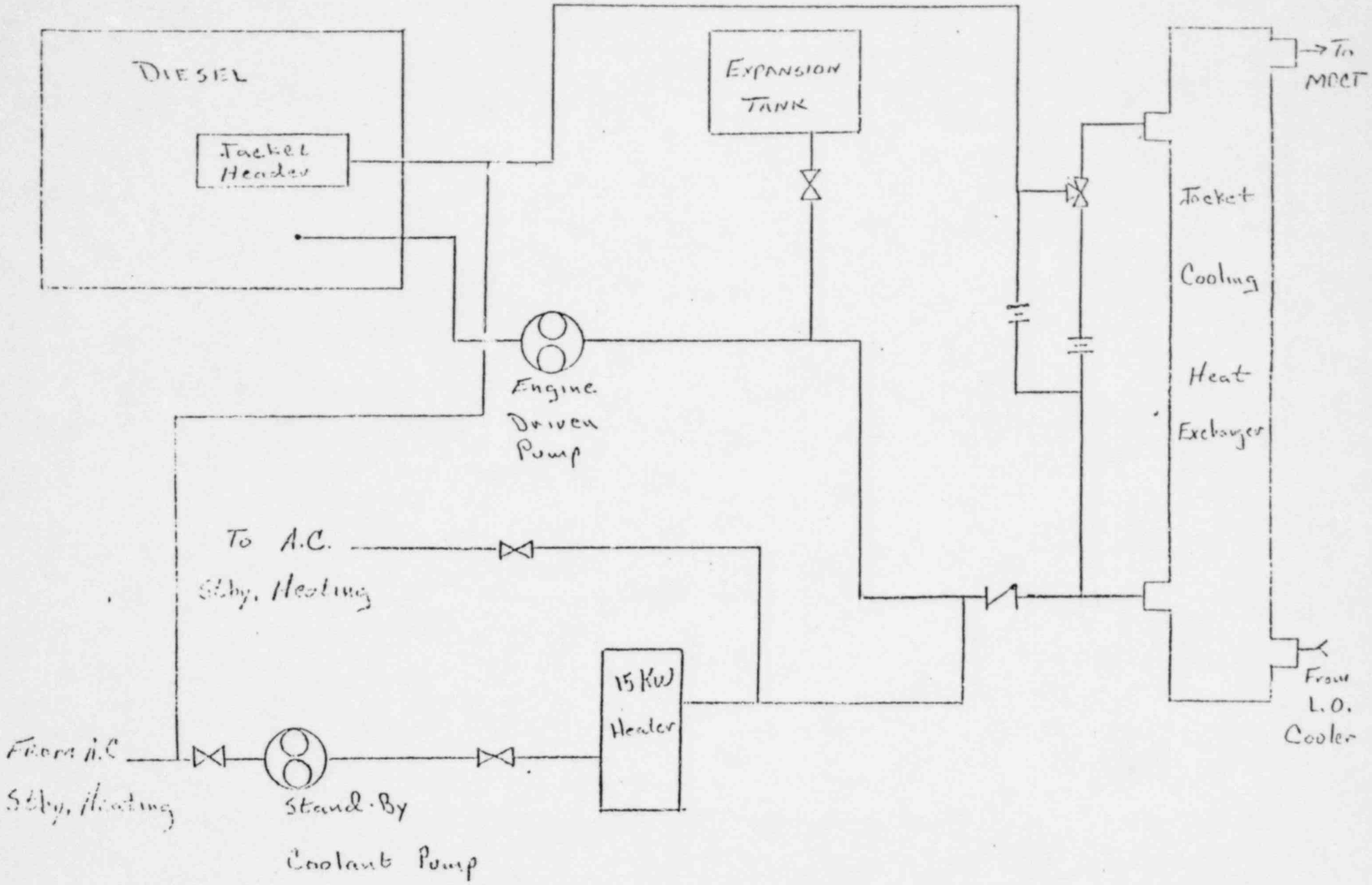

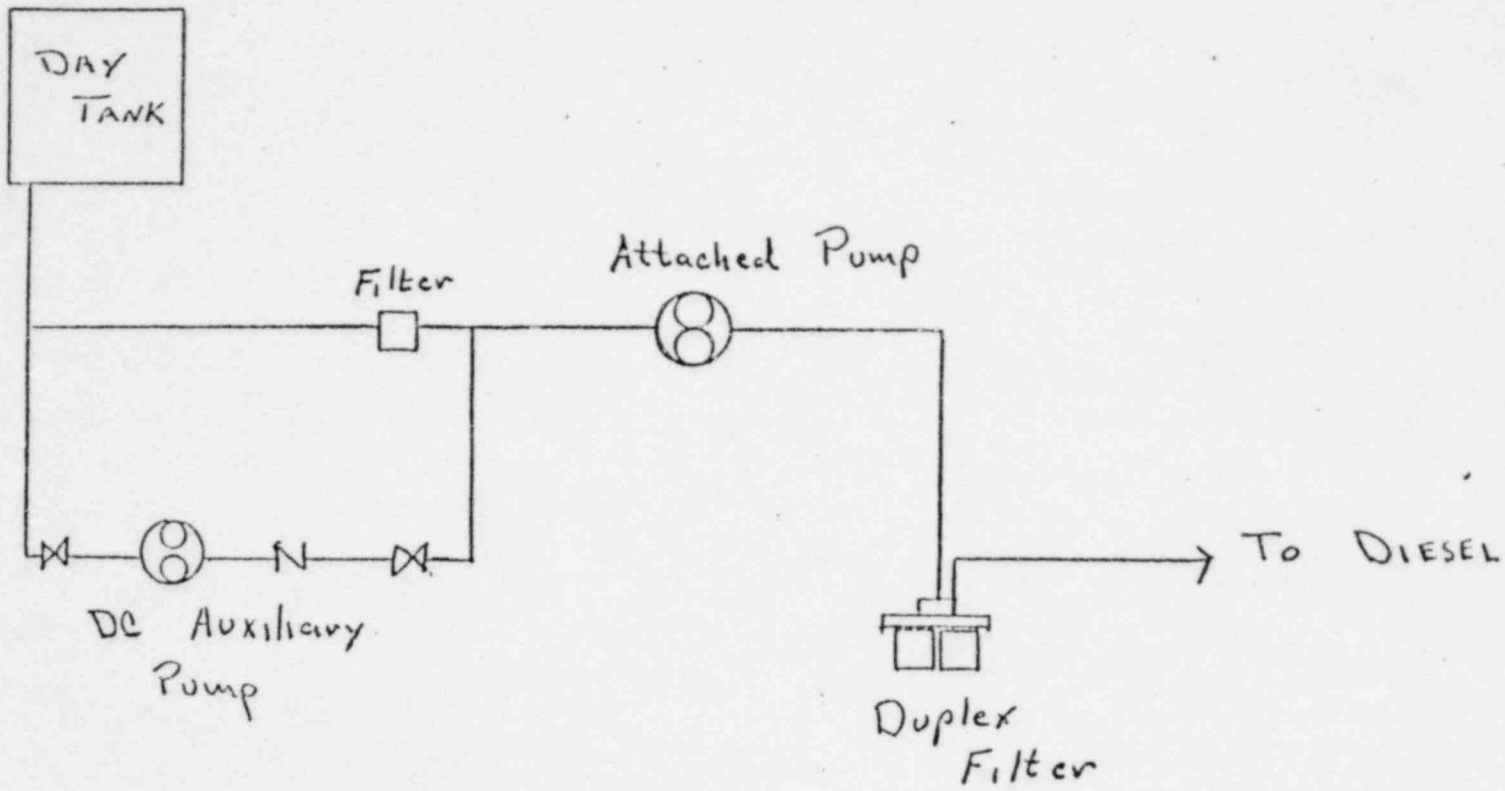

ENGINE FUEL OIL SYSTEM

LOCAL CONTROL PANEL

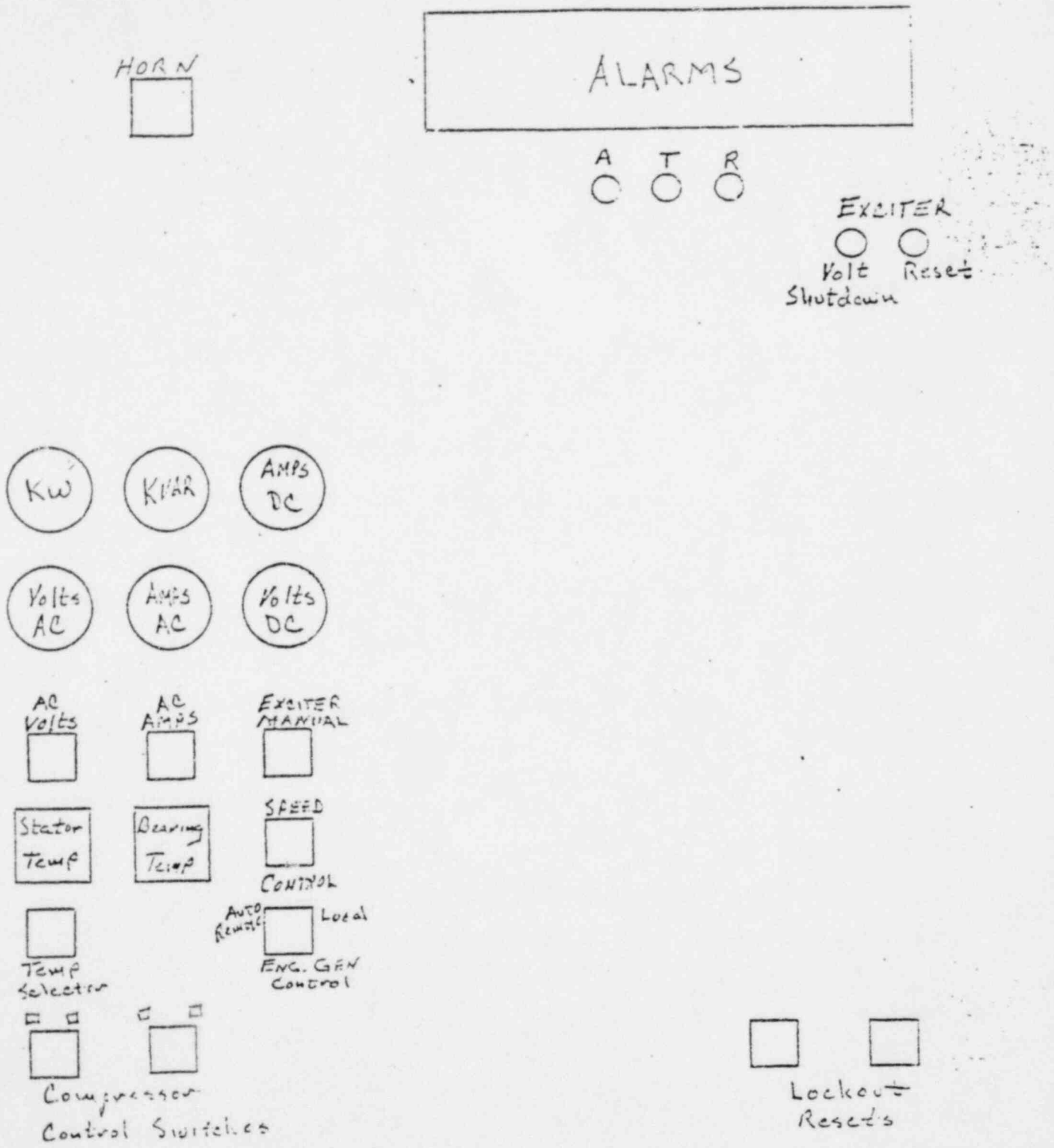

APPENDIX F

Unit I - Unit II Comparison

System: Diesel Generators

UNIT I	UNIT II
1. Diesels are controlled from console in the control room.	1. Each diesel has a separate control panel in the control room.
2. Diesel has mechanical hydraulic governor (Fly ball governor)	2. Diesel has electronic hydraulic governor (senses speed from a point on generator output)
3. D.G. Exciter - must be manually set control reheostat on console CR.	3. D.G. Exciter - will automatically return to proper voltage setpoint when engine is shutdown. Special cams and limit switches with indicating lights are provided for this purpose.
4. Governor setpoint must be manually set a 900 RPM when D.G. is being shutdown.	4. Governor setpoint will automatically return to 900 RPM when the D.G. is shutdown.
5. Uses radiator and large fan for removing heat from air and fluid systems.	5. Uses heat exchangers cooled by NR system to remove heat from air and fluid systems.
6. Use lube oil from 55 gal. drums for make-up to sump.	6. Lube oil day tank for oil storage for make-up to sump.

ENCLOSURE 1

UNIT II CATEGORY IV CRO ASSIGNMENT SHEET

CYCLE 1-2

NAME _____ START DATE _____

COMPLETION DATE _____

1. Read System Description #4A - Condensate and Feedwater System.
2. Read System Description #4B - Condensate Polishing.
3. Read System Description #14 - Condenser Air Removal.
4. Trace the Condensate System.
5. Read the following procedures:
   a. OP 2106-2.1 - Condensate
   b. OP 2106-2.2 - Condensate Polishing
   c. OP 2106-2.3 - Condenser Air Removal
   d. 2204-17 - Applicable Alarm Responses
6. Complete the Condensate Questionnaire.
7. Read the Feedwater Handout.
8. Trace the FW and EFW Systems.
9. Read the following procedures:
   a. OP 2106-2.4 - Feedwater
   b. OP 2104-6.3 - Emergency Feedwater
   c. EP 2202-2.2 - Loss of S.G. Feed
   d. EP 2202-2.3 - Steam Supply System Rupture
   e. 2207-14 - Applicable Alarm Responses
10. Complete the Feedwater Questionnaire.
11. Read System Description #1 - Main and Reheat Steam.
12. Trace the Main and Reheat Steam System.

13. Read the following procedures:

    a. Main and Reheat Steam - OP 2106-1.1

    b. Turbine Bypass - OP 2106-1.5

    c. 2207-14 - Applicable Alarm Responses

14. Complete the Main and Reheat Steam Questionnaire.

15. Read the following System Descriptions:

    a. #2 Bleed Steam

    b. #7 Heater Drains

16. Trace the Bleed Steam and Heater Drain Systems.

17. Read OP 2106-1.2 - Extraction Steam and Heater Drains.

18. Complete the Extraction Steam and HD Questionnaries.

19. Review Main Turbine Tech Manual - Vol. I&II.

20. Read the following procedures:

    a. OP 2106-3.1 - Turbine Generator

    b. OP 2106-3.2 - Turbine Lube Oil

    c. OP 2106-3.3 - H2 Seal Oil

    d. 2106-1.4 - Gland Steam

    e. EP 2203-2.2 - Turbine Trip

21. Trace the following systems:

    a. Main turbine

    b. Turbine lube oil

    c. H2 Seal Oil

    d. Gland Steam

22. Complete the Turbine Generator and Auxiliaries Questionnaire.

TOTAL POINTS TO DATE FROM ENCLOSURE 2 _____

WRITTEN TEST DATE _____ RESULTS _____

ORAL TEST DATE _____ RESULTS _____

ANSWERS MISSED, HANDED IN CORRECTED _____

_____ DATE: _____

SIGNATURE OF LICENSED TRAINING COORDINATOR

CYCLE 1-2

REFERENCE MATERIAL FOR QUESTIONNAIRES

REF. #	TITLE
1	Condensate and Feedwater System Description #4A
2	Condensate Polishing System Description #4B
3	Condenser Air Removal Procedure OP 2106-2.3
4	B&R Drawing #2005
5.	B&R Drawing #2006
6	B&R Drawing #2010
7	Condensate Handout - Provided
8	Feedwater Handout - Provided
9	Feedwater Procedure - OP 2106-2.4
10.	Steam Rupture Procedure - EP 2203-2.3
11	OTSG Handout - Provided
12	Main and Reheat Steam System Description #1
13	Turbine Bypass Procedure OP 2106-1.5
14	Bleed Steam System Description #2
15	Extraction Steam and Heater Drain Procedure OP 2106-1.2
16	Heater Drains System Description #7
17	B&R Drawing #2003
18	B&R Drawing #2009
20	Westinghouse Turbine Tech Manual Vol I&II
21	Turbine and Auxiliaries Handout - Provided
22	Turbine Trip Procedure EP 2203-2.2

UNIT II FEEDWATER QUESTIONNAIRE

1-2

1. What sources of steam are available to drive the main feed pumps? When is each used? (Ref #1)

2. List the automatic trips and setpoints for the feed pumps. (Ref #9)

3. Outline how feedwater flow is controlled from initial startup through 100% power. (Ref #8)

4. Describe how and why a Main Steam Rupture from the A OTSG (upstream of MS-V4 and 7A) will affect the feed system.

5. What cause the Emergency Feed pump to automatically start? What sources of water are available for Emergency feed in order of preference? Explain the function and location of the emergency feed connection to the OTSG. (Ref #1, #11)

UNIT II CONDENSATE SYSTEM QUESTIONNAIRE

1-2

1. Tech Spec 3.7.1.3 requires a minimum of 220,000 gallons of water in the Cond. Storage Tanks. Explain the basic flow path we use to fill the tank. Why is this path used? (Ref #1)

2. Describe the hotwell level control scheme. What complications can result from an excessively high or low level? (Ref #1)

3. What are the power supplies to the condensate and condensate booster pumps? Describe the interlock between CO-P1A and CO-P2A. (Ref #1)

4. Can we operate at 100% load with condensate pump "A" and condensate booster pump "B" out of service? Explain. (Ref #1)

5. Outline the basic steps required to completely regenerate a condensate polishing vessel. (Ref #2)

6. What precautions must be observed when breaking main condenser vacuum? Why is it desirable to break vacuum as rapidly as possible? (Ref #3)

UNIT II MAIN AND REHEAT STEAM QUESTIONNAIRE

1-2

1. When reduce power from 100% to 15%, explain what variations, if any, can be expected in the following parameters: (justify your answers)(Ref#11)

   a. OTSG operating level
   b. OTSG pressure
   c. Tave RCS
   d. Amount of superheat added to steam

2. Why must begin to reduce Tave when using less than 15% steam flow? (Ref #11)

3. Indicate the steam flow capabilities of the collowing flow paths in units of % reactor power: (Ref #12)

   a. combined OTSG Safety valves
   b. Combine turbine bypass valves
   c. Combine atmospheric dump valves

4. Which valves in the Main Steam System are DC motor operated? Why? (Ref #12)

5. What four (4) functions do the turbine bypass valves perform? (Ref #13)

6. What two conditions will cause the atmospheric dump valves to operate instead of the turbine bypass valves? (Ref #13)

UNIT II EXTRACTION STEAM AND HEATER DRAINS QUESTIONNAIRE

1-2

1. List all the stages from which steam is extracted from the main turbine. Indicate all the possible uses for each stage of extraction. (Ref #14)

2. How does the 3rd stage extraction steam isolation valve arrangement differ from the 11th stage? Why? (Ref #14)

3. What can cause an individual extraction steam valve to shut? Explain the reason for each trip. How is the valve re-opened in each case? (Ref #14, #15)

4. OP 2106-1.2 provides for pumping the heater drain tank to tne feed pump suction when we reach 25% power. How is HD-T level maintained $<$25% power? Why do we wait until 25% before d recting HD-T contents to the feed pump suction? (Neglect chemistry precautions) (Ref #16)

5. What is meant by "Cascading Heater Drains"? What is the advantage of this design? (Ref #16)

6. How many HD pumps are normally operating at 100% power? Can we maintain this power with fewer HD pumps? Explain. (Ref #16)

7. What is the maximum power we can maintain with no HD pump operating? What additional changes must be made to the plant to accomodate this power? (Ref #16)

UNIT II MAIN TURBINE GENERATOR AND AUXILIARIES QUESTIONNAIRE

1-2

1. Sketch an overhead view of the Main Turbine Generator Unit. Include: (Ref #21)

   a. Generator
   b. Exciter
   c. Main journal bearing
   d. thrust bearing
   e. HP and LP turbines
   f. Governor and throttle valve location (indicate opening sequence)

2. Describe the flow path of steam as it enters the unit until it exhausts to the condenser (Ref #21)

3. List the valves that should automatically close or open following a Turbine Trip Signal. Indicate why each valve cycles. (Ref #22)

4. List the automatic turbine trip devices located in the "trip block". Indicate the setpoints and reason for each trip in terms of what we are being protected against. (Ref #21)

5. What are the sources of "airside" seal oil in order of preference? (Ref #21)

6. Explain how the H2 Seal Oil System will operated without "H2 Side" seal oil available. Are there any problems with operating in this manner? (Ref #21)

7. What are the sources of steam available to seal the:

   a. HP turbine
   b. LP turbine

   Indicate when each is used or available and how the proper pressure is maintained. (Ref #21)

ONCE-THROUGH STEAM GENERATOR
SERVICE MANUAL

Metropolitan Edison Company
Three Mile Island Nuclear Station
Pennsylvania

BABCOCK & WILCOX
INSTRUCTION BOOK
NO. 620-0005
01-0018 00

55-10-1
55-10-2

TABLE OF CONTENTS

Section 1 General Description

Paragraph		Page
1.1	General Data	1-1
1.2	Introduction	1-3
1.3	Description	1-3
1.4	Design Specifications	1-4
1.5	Cleaning	1-5

Section 2 Principles of Operation

Paragraph		
2.1	Normal Operation - Steady State	2-1
2.2	Normal Operation - Transients	2-4
2.3	Automatic Control Principles	2-4
2.4	Low Load Operation	2-5
2.5	Fouling	2-5
2.6	BTU Availability Control	2-6
2.7	Stability - Adjustable Orifice	2-7
2.8	Auxiliary Feedwater Operation	2-7

Section 3 Instrumentation

Paragraph		
3.1	Instrumentation Connections	3-1
3.2	Feedwater Sampling Connections	3-1
3.3	Drain Connections	3-2
3.4	Vent	3-2

Section 4	Layup	Page
Paragraph		
4.1	Dry Layup	4-1
4.2	Wet Layup	4-1
Section 5	Inspection, Maintenance and Repair	
Paragraph		
5.1	Maintenance Description	5-1
5.2	Repair Description	5-1
5.3	Chemical Cleaning and Tube Leak Repair Description	5-1
5.4	Manway Opening	5-2
5.5	Manway Closing	5-4
5.6	Locating Leaking Tubes	5-5
5.7	Leaking Tube Marking	5-5
5.8	Primary Inspection Cover Removal and Installation	5-6
5.9	Secondary Side Opening & Closing	5-7
5.10	Tube Plugging	5-8
5.11	Chemical Cleaning	5-8
5.12	Orifice Plate Adjustment	5-8
5.13	Tube Locating & Numbering	5-9
Section 6	As Shipped Data	6-1
Section 7	Spare Parts & Special Tools	7-1
Section 8	Engineering Drawings	8-1

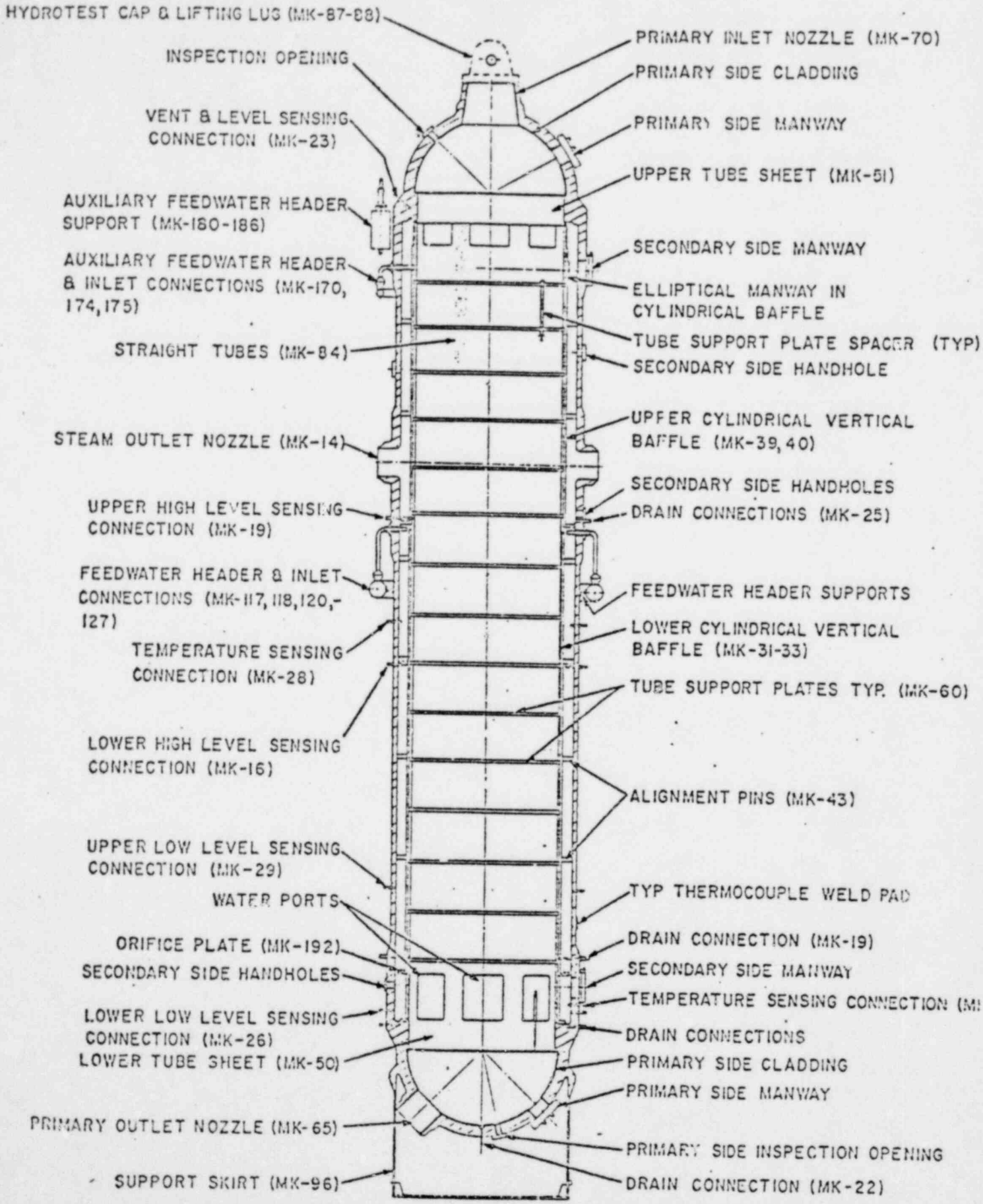

Figure 1 - 1
Once Through Steam Generator

GENERAL DESCRIPTION

1.1 General Data

Dimensions

Height:

Bottom of Support Skirt to Top of Inlet Nozzle	73 ft, 2½ in.

Weights:

Shipping	570 tons
Flooded	740 tons
Operating (15% load)	621 tons
Operating (100% load)	637 tons
Primary Manway Covers (2)	1174 lb each
Secondary Manway Covers (2)	419 lb each

Pressures: (psia)	Design	Full Load Operating	Hydrotest
Primary	2500	2200	3125
Steam Outlet	1050	910	1315
Feedwater	1100		-
Primary Drop		32	

Temperatures (°F)	Max.	Full Load Operating	Hydrotest (min) (Shell Temp.)
Primary	650	602.8 Inlet	
Secondary	600	570	110
Feedwater	455	455	

Operating Limits and Precautions

Min. Pressurization Temperature	100 F
Max. Heatup/Cooldown Rate	100 F/hr
Min. Annulus Water Temp.	10 F below saturation
Pressure (max.)	hydrotest pressures

Note: Prior to operating this unit, consult Babcock and Wilcox Draft Procedures prepared by Field Service and Training Section, Lynchburg, Virginia, for specific limitations accounting for interfaces with other components and systems.

Operating Conditions (Full Load)

Heat Transfer	4.211×10^9 BTU/hr
Primary Fluid Flow	65.66×10^6 lb/hr, 602.8 F
Steam Flow	5.298×10^6 lb/hr

Heat Transfer Tubes

Number	15,531
Material	Inconel *
Size	0.625 O.D., 0.034 wall, 56 ft, 3-½ in. long, with 52 ft. heating length
Total Heating Area	132,407 ft^2

Openings, Nozzles and Penetrations (See Fig. 8 - 1)

Primary Inlet Nozzle (1)
Primary Outlet Nozzles (2)
Steam Outlet Nozzles (2)
Feedwater Inlet Nozzles (32)
Auxiliary Feedwater Nozzles (7)
Shell Drains
4 at lower tubesheet 1½ in.
2 at handholes above feedwater header, 90° apart 1½ in.
High Level Sensing Connections, 1 in. I.D.
Upper: between W-Z Axes, 44 ft 7 in. above bottom of support skirt flan
Lower: directly below, 34 ft 10 in. above bottom of support skirt flang

Low Level Sensing Connections, 1 in. I.D.
Upper: in line with high level sensors, 20 ft, 3 in. above bottom of support skirt flange.
Lower: in line with all other sensors, 12 ft, 3 in. above bottom of support skirt flange.

Temperature Sensing Connection, 1½ in. I.D., 28° toward X axis from W axis, 12 ft. 9 in. above bottom of skirt flange.

Vent and Level Sensing, 1½ in. I.D. in upper tubesheet transition bevel, between X and Y axes.

Primary Manways (2) 16 in. I.D., in top and bottom heads on X axis

Secondary Manways (2) 16 in. I.D. on X axis near the tubesheets

Primary Inspection Openings (2) 5 in. I.D. Z axis of top head; X axis bottom head near center.

Secondary handholes (15) 5 in. I.D. upper 8, 44 ft. 10 in. above skirt flange, lower 7, 13 ft. 11 in. above skirt flange

Primary Drain (1) 1 in. I.D., dead center lower head.

*Inconel is the trade name of a Ni-Cr-Fe alloy manufactured by the International Nickel Co. and used as a generic term throughout the industry to denote similar all instead of a specific manufacturer.

1.2 Introduction

The steam generator transfers heat from the primary coolant (from the reactor) to the secondary fluid. This heat transfer converts feedwat entering at 455 F to dry superheated steam to drive the generating turbines.

Primary water enters through the inlet nozzle in the top head, flows downward transferring heat to the feedwater, collects in the bottom head, and out through two outlet nozzles to return to the reactor.

Feedwater enters through the header and 32 nozzles, flows downward in the annulus between the baffle and shell, enters the tube bundle at the lower tubesheet and upward through the bundle. In its upward flow it is converted into dry superheated steam, exiting through the outlet nozzles to the turbines.

1.3 Description (See Fig. 1-1)

The once-through steam generator (OTSG) is a vertical shell-and-tube heat exchanger. The inner surfaces of the heads and tubes, and outer surfaces of the tubesheets, comprise the primary side.

The secondary side consists of the inner surfaces of the tubesheets and shell and outer surfaces of the tubes.

Tubes are stabilized in support plates with tri-lobed holes which allow upward flow.

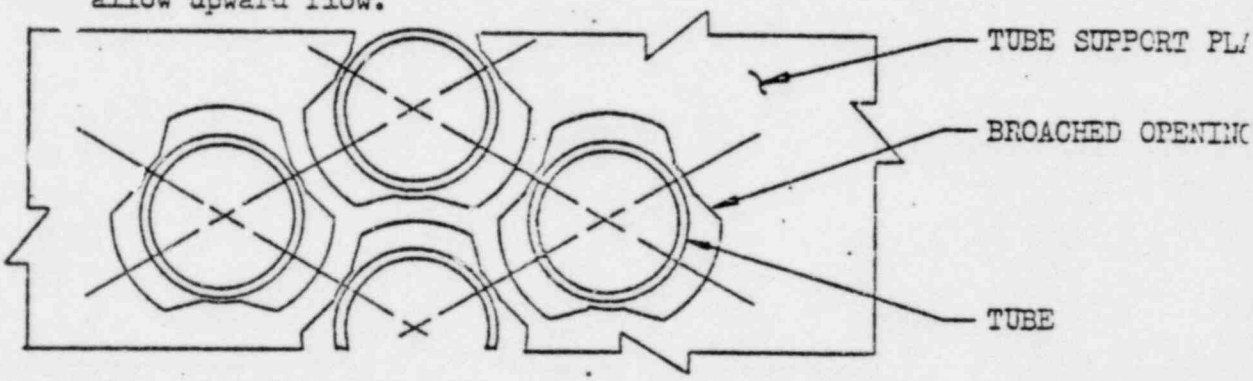

A two-section cylindrical baffle, upper and lower, surrounds the tube bundle. It directs flow of feedwater downward and acts as a containment to enclose the tube bundle and feedwater during the heating and conversion process.

1.4 Design Specifications

1. The American Society of Mechanical Engineers, Boiler and Pressure Vessel Code, Section II, "Materials Specifications", 1965.

2. The American Society of Mechanical Engineers, Boiler and Pressure Vessel Code, Section III, "Rules for Construction of Nuclear Vessels", including Addenda through Summer 1967, and applicable Code Cases as of June 30, 1967, for Class A Vessels.

3. The American Society of Mechanical Engineers, Boiler and Pressure Vessel Code, Section IX, "Welding Qualifications", 1965.

4. The Babcock & Wilcox Company, Functional Specification for Steam Generators Number CS (F)-3-33.

5. The Babcock & Wilcox Company, General Functional Specification for Reactor Coolant System Components Number CS (F)-3-92.

6. The Babcock & Wilcox Company, Power Generation Division, Standard Equipment Specification for Once-Through Steam Generator Number CS-3-33.

7. The Babcock & Wilcox Company, General Specification for Cleanliness of Nuclear Reactor Systems and Components Number CS-5-95.

8. The Babcock & Wilcox Company, Power Generation Division, Standard Equipment Specification for Feedwater Header Number CS-3-150.

9. The Babcock & Wilcox Company Quality Control Department Specification covering Welding, Non-Destructive Testing, Heat Treatment, Fabrication Assembly and Testing.

10. The Babcock & Wilcox Company Water Chemistry Manual, No. BAW-1332.

1.5 Cleaning (Prior to operation or after inspection)

Safe operation and maintenance of the steam generator is directly related to proper cleaning of its surfaces. Improper mechanical or chemical cleaning of surfaces may result in excessive local corrosion. The resultant corrosion products taken into solution in the primary coolant could become highly radioactive, thus complicating the maintenance of any component due to the hazards of high levels of radioactivity. In addition, extreme care shall be observed to prevent dirt, foreign particles, etc., from lodging between seal surfaces of the generator or entering the primary coolant system and causing excessive wear or seizure of valves.

NOTE

The following are pertinent extracts from B&W Specifications for Cleanliness. Consult B&W Specification CS-5-95 for detailed cleaning procedures and requirements.

1. Components shall be cleaned to the extent that no contamination is visible to a person with normal visual acuity, natural or corrected, under a lighting level of at least 50 foot-candles. Areas which cannot be visually inspected due to inaccessibility or geometry shall be evaluated by wiping the surface with a wet or dry, lint free cloth until all traces of foreign materials are removed and the cloth remains clean after use.

2. Iridescent temper films resulting from heat treatment and tightly adherent black oxide films that occur on the back side of welds need not be removed.

3. Rust of any type or amount shall not be allowed. If rusting does occur, the surface shall be cleaned to remove the rust or rust-producing condition and any visible surface contamination.

4. Cleanliness shall be maintained by packaging components or sub-assemblies in polyethylene bags if they are to be stored.

5. In event cleaning the primary side of tubes is required, consult Babcock and Wilcox Field Service Dept., Lynchburg, Va.

   To establish or restore proper cleanliness:

   1. Clean all metal surfaces necessary by swabbing with clean, lint free cloths, saturated with acetone, followed by swabbing with clean, lint free cloths saturated with distilled water. Dry with clean, lint free cloths. The cleaning must leave no foreign matter after cleaning, particularly in the root areas of threads.

   2. Pressure sensitive tape may be used occasionally on components. Any time the pressure sensitive tape is removed from a component use acetone to remove any residue. Then clean the area as described in Step 1.

3. No sandblasting of internal surfaces is permitted.

4. Degreasing solvents containing chlorinated compounds shall not be used.

SECTION 2

PRINCIPLES OF OPERATION

2.1 Normal Operation - Steady State

NOTE

Nuclear steam systems are supplied with two identical steam generators. They are designated Units No. 1 or 2, as shown on the nameplates. This manual refers to a single unit for simplicity and applies to both vessels.

- - -

Pressurized water from the reactor (primary water or reactor coolant) enters the steam generator through the inlet nozzle in the upper head at 602.8 F, 100% load, flows through the tubes into the lower head and out through two outlet nozzles to the reactor.

Secondary feedwater enters through the feedwater header, the 32 spray nozzles, down the annulus between the circular baffle (surrounding the tube bundle) and the shell.

As feedwater is sprayed into the lower annulus, it is heated to saturation temperature by mixing with and condensing steam from the bleed port between the upper and lower baffles. This prevents a thermal shock in the vessel shell, and excessive tube-to-shell temperature differentials.

Water at saturation temperature flows through the adjustable orifice plate, through ports at the lower end of the vertical baffle and into the tube bundle at the lower tubesheet. Boiling begins immediately upon contact with the hot (555 F) generating tubes and increases in quality* as it flows upward through three distinct heating zones shown in Fig. 2-1.

<u>Nucleate Boiling</u> is the conversion from liquid to vapor state, in a zone where the tubes are wetted by secondary water, characterized by very high heat transfer rates.

*Quality: Percent of water by weight converted to steam.

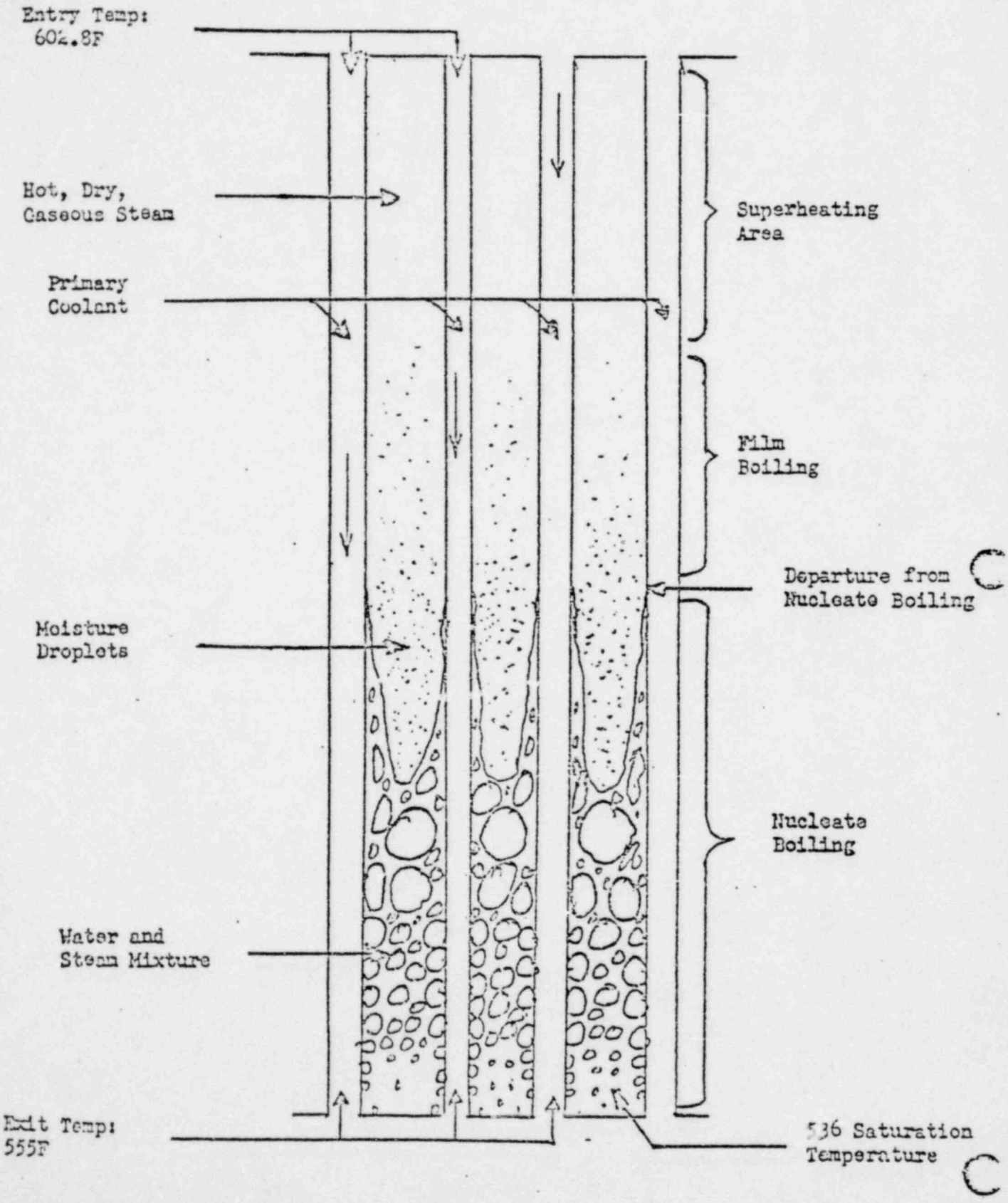

Figure 2-1. Secondary Water Heating Zones

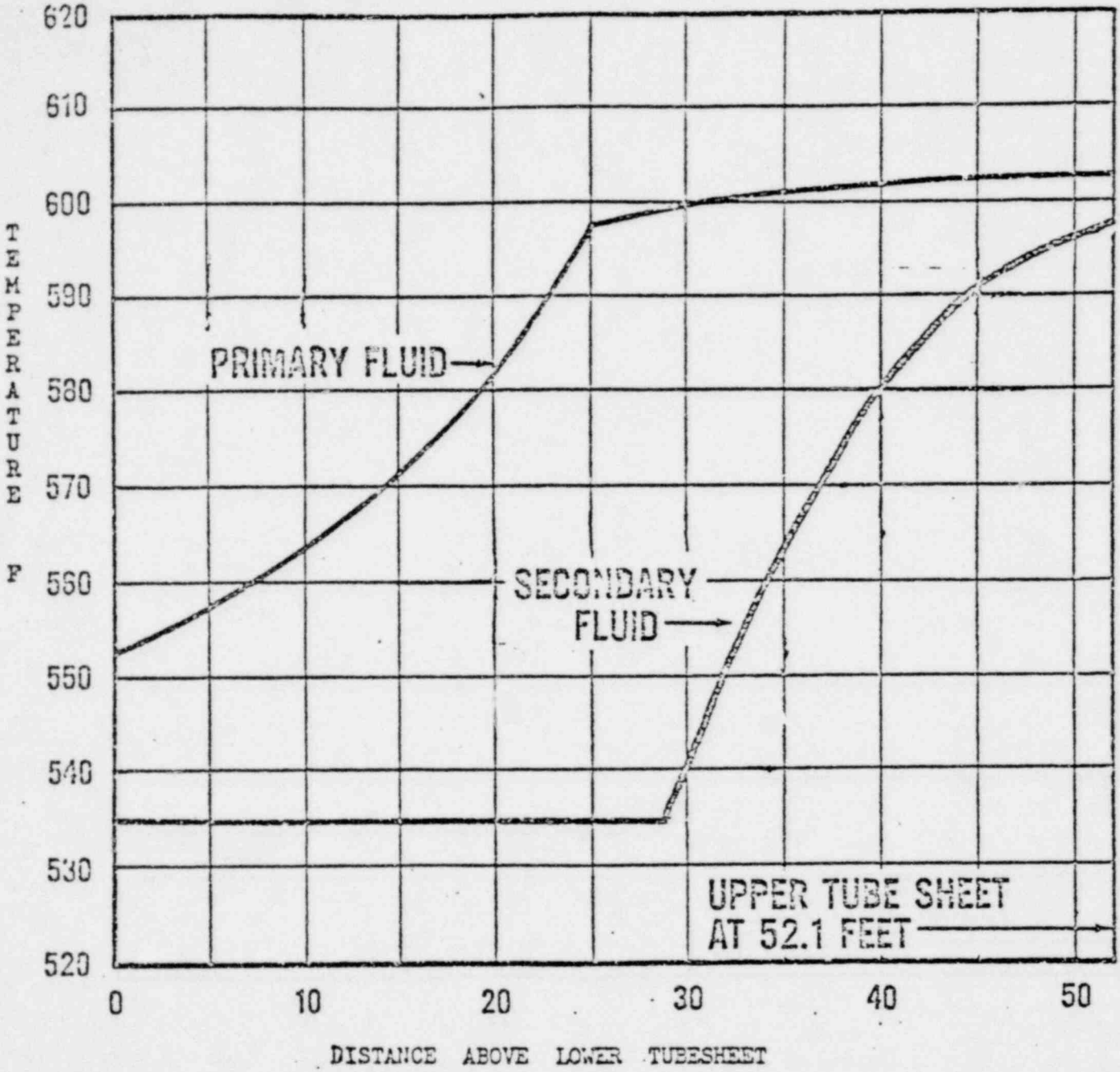

Figure 2-2. Temperature Distribution at 100% Load

Departure from Nucleate Boiling is that point at which the tubes are no longer wetted by the secondary water.

Film Boiling is the conversion of water to steam in that zone where the tube is dry but not all of the water has evaporated. It is characterized by greatly reduced rates of heat transfer.

Superheating is elevation of steam temperature by continuous addition of heat. The end output to the turbines is superheated steam. See Figure 2-2 for fluid temperature curves.

2.2 Normal Operation - Transients

The boiler length required to reach 100% quality is approximately a direct linear function of load (steam generation rate). This is a natural consequence of constant average primary temperature and essentially constant pressure operation. Since boiling length varies with load, secondary side water inventory is also approximately a direct linear function of load. Therefore, during a transient, steam generator water inventory must change and feedwater flow should lead steam flow by approximately 30 seconds. That is, on a load increase, overfeeding is required, and on a load decrease, underfeeding is necessary. The amount of overfeeding and underfeeding is a direct function of the speed of the transient. For instance, a 10%/min. ramp requires overfeeding of about 5% of full load feedwater flow. The Integrated Control System automatically provides the required overfeeding and underfeeding. However, if feedwater is on manual control, steam flow can be expected to lag feedwater flow by about 30 seconds.

2.3 Automatic Control Principles

During normal operation above 15% load, the Integrated Control System (ICS) provides constant average primary temperature. The ICS does this by calculating the average of reactor outlet and steam generator outlet temperature, and using the error between the calculated average and the desired average temperatures as a control signal to make minor adjustments of control rod position until the desired average temperature is obtained.

During normal operation above 15% load (except during transients), the ICS also provides constant turbine throttle pressure (900 psia). It does this by measuring turbine throttle steam pressure and using the error between the measured pressure and 900 psia as a signal to adjust feedwater flow and steam flow until the desired pressure is obtained. Since constant pressure is maintained at the turbine throttle valve, as load is changed, there will be small variations (25 psi) in steam generator pressure due to varying pressure drop in the steam piping.

During normal operation, pressure (in addition to feedwater demand and measured feedwater flow) is the most critical control signal relating to the steam generator. However, during several "abnormal" conditions, other variables which are continuously monitored become active in the control system. These are discussed in the following sections.

2.4 Low Load Operation (below 15% of full load steam flow)

When pressure and average primary temperature are constant, secondary side water inventory is approximately a direct linear function of steam flow. Therefore, at zero steam flow the water inventory would tend to be zero. Since it is essential to have a reserve of water available for emergencies such as temporary loss of feedwater pumps, the ICS prevents the water inventory from dropping below the inventory corresponding to 15% load. The ICS accomplishes this by measuring the pressure drop across the "boiler section" of the steam generator (upper and lower low level connections). When this pressure drop or "water level" decreases to about 25 in. H_2O, control of feedwater flow automatically switches to the low water level control, and controls feedwater flow to maintain the pressure drop ("water level") at not less than 25 inches.

Steam flow from the steam generator can now be reduced only by reduction of reactor power and average primary temperature If reactor power is maintained, and steam flow to the turbine must be reduced, excess steam flow is bypassed directly to the condenser.

2.5 Fouling

CAUTION: When steaming at load, it is essential that the water level in the feedwater heating chamber remain below the elevation of the feedwater nozzles. If the feedwater nozzles become flooded, feedwater heating will be impaired and the result could be excessive tube-to-shell temperature differentials, and excessive tubesheet temperature differentials. Load must be reduced immediately.

The boiler section pressure drop, plus the adjustable orifice pressure drop, will be balanced by the momentum recovered from the feedwater spray plus the water level in the feedwater heating chamber. Therefore, any condition of operation which increases the boiler section pressure drop or adjustable orifice pressure drop will result in an increase in water level.

During normal operation there is sufficient margin to assure that the feedwater nozzles are not flooded. However, two conditions will increase boiler section pressure drop and, consequently, water level in the feedwater heating chamber and could, in the extreme case, cause flooding of feedwater nozzles.

1. A deviation from normal operating conditions (such as reduction of reactor coolant flow or temperature),

2. Fouling of the outer surfaces of the boiler section tubes and tube support plates.

The ICS prevents the water level from becoming high enough to flood the feedwater nozzles. It does this by measuring the water level (pressure drop) in the feedwater heating chamber using pressure taps in the feedwater heating chamber just above the adjustable orifice (upper low level sensing connection) and in the tube bundle just above the bleed steam elevation (upper high level sensing connection).

When and if the water level reaches an elevation about 3 feet below the feedwater nozzles, control of feedwater flow automatically switches to the high level control circuit. This circuit limits steam generator load and prevents water level from increasing high enough to flood the nozzles.

An increase in feedwater heating chamber water level due to fouling will be gradual, and will probably not be noticeable from daily changes. A record should be kept of water level as a function of time. A careful record of rate of increase of water level will permit prediction of the time when load will be limited due to excessive pressure drop and will permit scheduling of chemical cleaning. Since the water level is also a function of load, comparisons of water levels (or pressure drops) must be made at the sa load.

Any adjustment in the position of the adjustable orifice will change the curve of water level as a function of load. This will not change the rate of increase of pressure drop with time, but may affect the the time between chemical cleanings.

The ICS has other control loops for protection of the reactor, steam generator and turbine. However, if operating conditions deviate from normal, the high water level control may take control of the feedwater and reduce load even though the steam generator is not excessively fouled.

An alarm, independent of the ICS, warns when temperature in the feedwater heating chamber is 10 F below saturation temperature. This reduction in temperature indicates that the feedwater nozzles are flooded. Load on the steam generator must be reduced immediately when this alarm is activated.

2.6 BTU Availability Control

The steam generator will produce steam with at least 35 F superheat when all conditions are normal:

Primary Flow = 65.66×10^6 lb/hr (minimum)

Average Primary Temperature = 578.9 F (minimum)

Steam Pressure = 925 psia (maximum)

Feedwater Temperature = 455 F at full load (minimu

However, if these conditions deviate from normal, steam temperature may decrease and, if the deviation is great enough, wet steam will be produced. (An excessive amount of moisture in the steam could damage the turbine). Therefore, it is essential that load be limited as a function of amount of deviation of operating conditions from norm

To assure that wet steam will not be produced, a "BTU Availability" control loop is incorporated in the ICS. This circuit continuously monitors primary flow (reactor coolant flow), primary inlet (reactor outlet) temperature, feedwater temperature and steam pressure at the steam generator.

These signals are used to calculate the maximum load that can be safely carried under the existing combination of conditions. If the feedwater flow demanded from the steam generator exceeds the calculated permissible load, control of feedwater flow automatically switches to the "BTU Availability" circuit and limits the load to assure that wet steam will not be carried to the turbine.

An alarm, independent of the ICS, warns when steam discharge temperature approaches saturation temperature, indicating that carryover of wet steam is likely. Load must be reduced immediately when the alarm is activated.

2.7 Stability - Adjustable Orifice

Under certain combinations of conditions, any steam generator can be unstable. Instability as used in this discussion is defined as periodic variations or oscillations in any of the variables in the nuclear steam system. These oscillations are usually most evident in steam pressure, steam flow, boiler section pressure drop or primary outlet temperature. Primary outlet temperature is the most reliable indication of instability. Oscillations, if present, can be expected to have a period of 4 to 6 seconds.

This steam generator has installed an orifice near the bottom of the feedwater heating chamber which has been adjusted for stable, oscillation-free operation. However, should oscillations develop, it may be necessary to increase the pressure drop across this orifice. The system must be shut down to make adjustments. The Babcock & Wilcox Company Field Service Department must be consulted when conditions indicate an adjustment will be required to correct a malfunction.

Operating experience may show that the pressure drop as installed is higher than required, in which case the Babcock & Wilcox Company must again be consulted.

In general, the orifice adjustment provides the minimum pressure drop required for stable operation. This is because increased pressure drop increases the water level in the feedwater heating chamber and, therefore, increases the possibility of feedwater nozzle flooding and reduces the time between chemical cleanings of the steam generator.

2.8 Auxiliary Feedwater Operation

The auxiliary feedwater assembly consists of a ring header and 7 nozz which penetrate the shell and upper vertical cylindrical baffle near upper end of the baffle. The auxiliary feedwater system includes a p a storage tank, plus associated valves and piping. Its function is t promote natural circulation of primary fluid through the reactor and steam generator on loss of reactor coolant pumps. It does this by admitting water to the upper section of the steam generator thereby cooling the tubes and primary water near the top of the steam generat This promotes natural circulation by providing a longer "cold leg" th is possible when water is injected through the normal feedwater heade

The auxiliary feedwater system is not intended to cool all the tubes. The outer few rows, about 10 rows out of approximately 70 will be cooled. Therefore, there may be some secondary circulation through the center tubes of the tube bundle, but the net effect will be to induce circulation through the entire primary system.

This system also serves as an emergency fill system in the highly unlikely event the steam generator loses normal feedwater and becomes hot and dry.

SECTION 3

INSTRUMENTATION, DRAIN AND VENT CONNECTIONS (See Fig. 8-1)

3.1 Instrumentation Connections

Among the various water level and temperature sensing connections are:

Upper high level sensing Upper low level sensing	Prevent feedwater nozzle flooding and limit load to avoid carryover of wet steam (Sect. 2.4)
Upper high level sensing Lower low level sensing	Maintain a minimum water level for low-load operation
Upper vent and level sensing	Senses full level for hydrotest or chemical cleaning and vents air when filling
Temperature sensing (4) Thermowell connection	Measures downcomer water temperatu Measures saturation temperature at secondary side of lower tubesheet

Note: Additional instrumentation connections are incorporated in Unit #2 for certain test equipment. Refer to Figure 8-2 for identifications and locations.

Thermocouple pads at various locations on the shell permit measuring shell temperatures.

The thermowell connection, measuring saturation temperature, also warns (by alarm) of feedwater nozzle flooding when temperature falls 10 degrea below saturation.

Sensings are converted to signals in the Integrated Control System and compared with known values (or desired settings) to effect an automatic adjustment.

Each pressure or temperature sensing connection attaches to several different circuits, so arranged that if one circuit becomes inoperative, another one will automatically perform its function. Detailed descriptions and functions are given in other publications by the manufacturer of the Integrated Control System.

3.2 Feedwater Sampling Connections

Although feedwater sampling connections are not an integral part of the steam generator, they are included here due to the critical importance of feedwater chemistry maintenance.

Cleanliness and purity of feedwater cannot be overemphasized. Within one year of normal full-load operation, the total amount of solids in feedwater containing impurties of only 50 parts per billion will amount to a full ton.

Although it is expected that a significant portion of solids will carry through the steam generator either in solution in the steam or as a fine dust, some impurties (especially corrosion products) will remain in the unit.

Excessive deposits will eventually result in reduced load capacity.

3.3 Drain Connections (See Figures 8-1 or 8-2)

Six $1\frac{1}{2}$ inch drain connections permit draining the secondary side.

Four are 90° apart at the lower tubesheet.

Two are 180° apart, 44 ft. 7 in. above the skirt flange to drain the "trap" area between the upper and lower baffle sections.

Two one inch drains, 90° apart, 15 ft. 10 in. above the skirt flange drain the orifice section in the feedwater heating annulus area.

Drains are located to drain all water for dry layup, or all chemical cleaning solutions.

3.4 Vent

One upper level sensing and vent connection attaches to a drilled passage in the upper tubesheet to determine complete filling for hydrotest or chemical cleaning, and a vent when filling.

FEEDWATER SYSTEM

UNIT II

INDEX

SECTION	PAGE
I. OBJECTIVES	1
II. SYSTEM FUNCTIONS	1
III. GENERAL SYSTEM DESCRIPTION	1,2
IV. OPERATIONAL DESCRIPTION	2,3,4,5,6,7
APPENDIX A - SYSTEM FACT SHEET	8
APPENDIX B - INTERLOCKS	9
APPENDIX C - IMPORTANT PARAMETERS	10
APPENDIX D - TECHNICAL SPECIFICATIONS	11
APPENDIX E - FLOW DIAGRAMS	12,13
APPENDIX F - REFERENCES	14

FEEDWATER SYSTEM

LECTURE OUTLINE

I. OBJECTIVES

A. To know the purpose of the system.

B. To be able draw a one line diagram of the feedwater system showing all major valves, components, instruments and connecting lines.

C. To know the value of the major operating parameters.

D. To be able to trace the system out in the plant.

II. SYSTEM FUNCTIONS

A. Provide feedwater to the Once Through Steam Generators.

B. Heat the feedwater to increase the plant efficiency.

III. GENERAL SYSTEM DESCRIPTION

The feedwater system, in conjunction with the condensate system is designed to transfer condensate from the condenser hotwell to the steam generators at 110% rated flow and to increase condensate temperatuer to greater than 460°F under full power conditions.

Each main feedwater pump is designed for approximately 60% rated flow. The pumps have a capacity above rated flow to insure an adequate regulating margin to cover any variations in feedwater flow; i.e. to meet steam flow and to restore the water level in the steam generators after a transient. The main feedwater pumps are designed for a rated capacity of 15,500 gpm each.

The emergency feedwater system is designed to provide a limited amount of feedwater to the steam generators in the event of a loss of power or a feedwater pump trip. A turbine driven emergency feedwater pump is designed to provide up to 5% rated flow at operating pressure and will start if both main feedwater pumps trip or if all reactor coolant pumps are de-energized. Two motor driven emergency feed-

water pumps are each designed to provide 2½% rated flow at operating pressure and will automatically start also.

The main and emergency feedwater pumps each have a recirculation line on their discharge piping which are designed to prevent damage to the pumps from overheating by providing minimum flow through the pumps.

IV. OPERATIONAL DESCRIPTION

Startup

When starting up the Condensate and Feedwater System, the system valves are first positioned to permit condensate and feedwater to flow through the system from the condenserhotwell to the outlet of the 3rd stage feedwater heaters FW-J-6A and 6B and recirculate back to the condenser. To assure that manually operated block valves have not been inadvertently closed, these valves incoporate a locked open device. Initially, flow is bypassed around the condensate polishing plant by operating the bypass valve, CO-V12, and closing the condensate polisher inlet and outlet valves. The remaining startup valve line up is summarized below. Low pressure feedwater heater A and B train inlet isolation valves, CO-V38B and 38A and outlet isolation valves, CO-V50B and 50A,are open. Low pressure feedwater heater train bypass valve CO-V55 is shut. Steam generator feedpump discharge valves, FW-V8A and 8B, are open, 3rd stage feedwater heater FW-J-6A, 6B inlet isolation valves, FW-V9B and 9A are open and outlet isolation valves, FW-V13B and 13A are shut. The startup recirculation valves, FW-V12B and 12A, are open.

The main feed pump lube oil systems are started and the turbines are placed on the turning gear. A condensate/condensate booster pump set is started and the condensate and feedwater is pumped through the idle main feedpumps and recirculated back to the condenser via the recirculation valves, FW-V12B and 12A, and the flow control orifices in the recirculation lines. The Circulating Water System is put into operation to establish flow through the condenser and auxiliary steam

is then supplied to the Gland Steam System. The condenser vacuum pumps are started and the air extraction system is put into operation. The air extraction system will function so as to produce a 20" Hg vacuum in the condenser. The condensate polishing plant is now put into operation, refer to the Condensate Polishing System Description Index No. 4B. The conductivity of the influent and effluent of the condensate polishing plant are monitored and samples may be taken.

When the condensate chemistry is within specifications and the water level in the steam generators is equal to the startup level (refer to section 3.4.5 if startup level is not established) feeding the steam generators is commenced. The startup feedwater control valve inlet and outlet block valves,FW-V26A and 26B, and FW-V-19A and 19B, are opened. The main feedwater control valve inlet and outlet isolation valves, FW-V14A and 14B, and FW-V-17A and 17B, are opened. The 3rd stage feedwater heater outlet valves FW-V13A and 13B are also opened. The feedwater latching system is bypassed, the recirculation valves, FW-V12A and 12B, are shut and, the startup level in the steam generator is maintained by feeding through the startup control valves, FW-V25A and 25B. The feedwater line and the steam generator lower downcomer differential temperature must remain below 442°F during the heatup.

The operating set of condensate/condensate booster pumps supply feedwater to the steam generator until steam pressure approaches the discharge pressure of the pumps. A main feedwater pump is started on auxiliary steam to ensure the steam generators can be fed continuously throughout the startup. After the fourth reactor coolant pump is started the main feedwater pump is shifted from auxiliary to main steam and the auxiliary steam supply line is secured. When reheat steam becomes available the main feedwater pumps will automatically shift from main to reheat steam.

During heatup prior to startup of a main feedpump the turbine driven emergency feedpump remains tripped and the motor driven emergency feedpumps control switches are placed in "PULL-TO-LOCK". After the main feedpump is started the turbine driven emergency feedpump turbine is reset and the pump placed in "STANDBY" and the motor driven emergency feedpump control switches are placed in "NORMAL-AFTER-STOP".

Refer to applicable operating procedures for steam generator feedwater temperature requirements and method of plant load increase during startup.

Normal Operation

During normal operation, two sets of condensate/condensate booster pumps are in operation and the third set is in standby. The two condensate pumps take suction from the condenser hotwell and discharge the condensate through the Condensate Polishing System. Hydrazine and ammonium hydroxide are automatically added to the condensate at the outlet of the condensate polishing system to maintain a low feedwater dissolved oxygen level and a pH at 9.4 to 9.5 respectively. A portion of the condensate pump discharge goes directly to the turbine exhaust hood sprays, as required, to control the exhaust hood temperature. From the condensate polishing system, the condensate flows to the suction of the condensate booster pumps with a portion of the condensate passing through the gland steam condenser, GS-C-1. The discharge from the condensate booster pumps passes through two low pressure, parallel flow, feedwater heater trains consisting of the 14th stage external heater drain coolers, FW-C-1A and 1B; 14 th stage feedwater heaters, FW-J-1A and 1B; 13th stage feedwater heaters, FW-J-2A and 2B; 11th stage feedwater heaters, FW-J-3A and 3B; 10th stage feedwater heaters, FW-J-4A and 4B; 8th stage feedwater heaters, FW-J-5A and 5B, then recombines and goes to the suction of two SG feed pumps, FW-P-1A and 1B, which are both in operation. The discharge of the SG feed pumps passes through the 3rd stage feedwater heaters, FW-J-6A and 6B, which are high pressure heaters arranged for parallel flow. The feedwater passes through the main feedwater control valves, FW-V30A and 30B and startup control valves FW-V25A and 25B, which are fully open at 15% plant load and above, and then to steam generators, RC-H-1A and 1B, feedwater headers. Above 15% plant load, the feedwater flow rate is controlled by the ICS controlling the main feed water control valves which changes the pressure drop across the valves. The ICS then increases or decreases the SG feed pump speed between 3700 and 5300 RPM to maintain a constant pressure drop of 35 psi across the main feedwater control

control valve.

To lower the SG feed pump speed below 3700 rpm, manual speed raise-lower switches for each pump on Turbine Control Panel 5 are utilized. However, the SG feed pump speed must be maintained above or below the critical speed of the turbine which is 3480 rpm.

Shutdown

As the plant load is being reduced from 100% to 15% the feedwater flow rate to the steam generators is controlled by automatic speed reduction of the two steam generator feedpumps and partial closing of the main feedwater control valves by the ICS.

At 40% maximum guaranteed plant load or less, one steam generator feed pump and one condensate/condensate booster pump pair can be shut down because one feed pump can supply the required feedwater flow. Shutdown of one SG feed pump is done by first transferring its load to the other SG feed pump before tripping.

The feedwater flow rate is automatically controlled by the main feedwater control valves from 50% to 15% plant load. At 15% plant load, feedwater flow control is automatically changed by the ICS from the main feedwater control valves to the startup feedwater control valves, FW-V25A and FW-V25B, and control is maintained by the ICS from 15% to 0% plant load.

When the reactor has been shutdown, cooldown of the reactor plant begins. One set of condensate/condensate booster pumps and one steam generator feed pump continue to operate. The feedwater latching system is bypassed in order to prevent the feedwater control valves from closing as the main steam pressure decreases. Steam is still being produced in the steam generators and condensed in the condenser. When steam pressure is no longer capable of running a main feedpump the pump is shutdown and the steam generators are fed by the operating condensate/condensate booster pump pair and cooldown is continued through the turbine bypass valve. Before shutting down the second main feedpump the turbine driven emergency feedpump auto start must be defeated. When the reactor coolant temperature has been reduced to 250°F, the Decay Heat Removal System is put in operation to further reduce the reactor coolant temperature, (refer to the Decay Heat Removal System Description, Index No. 20). After the Decay Heat Removal System is in operation the condensate/condensate booster pump pair is stopped.

Special or Infrequent Operation

Loss of Feedwater Heater

The Feedwater and Condensate System may be operated with a low pressure heater train removed from service. During this mode of operation, the plant load must be reduced to 60% of the maximum guaranteed turbine rating.

The feedwater and condensate system may also be operated with a high pressure 3rd stage feedwater heater FW-J-6A or 6B removed from service by opening bypass valve FW-V15 and isolating the

inoperative heater(s).

Condensate/Condensate Booster Pump Set Trip with Standby Set Available

If two condensate/condensate booster pump sets are operating in conjunction with the two main feedwater pumps and a condensate/condensate booster pump set trips, the trip signal initiates the starting of the standby condensate/condensate booster pump set. Time delay relays prevent SG feed pumps FW-P-1A, 1B from tripping immediately on low suction pressure and allows time for the spare condensate/condensate booster pump to develop sufficient SG feed pump suction pressure. If sufficient SG feed pump suction pressure is not developed in time, one feed pump will trip.

APPENDIX A

SYSTEM FACT SHEET

MAIN FEED PUMPS:

Speed	5400 RPM
Capacity	15,500 gpm
Total Dynamic Head	2240 feet
Min. Flow Requirements	1000 gpm

APPENDIX B

INTERLOCKS

1. A loss of both SG feed pumps trips the main turbine and starts the turbine driven emergency feed pump, the ICS controls S.G. level at 30" low level limit to act as a heat sink.
2. A loss of all 4 RCP's starts the turbine driven emergency feed pump and controls S/G level at 50% level to promote natural circulation in the primary system.
3. Feedwater flow lagging feedwater demand results in a reduction of flow demand by the ICS reducing power demand. (cross limits).
4. Low feedwater temperature results in a reduction of flow demand. (FW Temp to demand calculator).
5. High level in S/G establishes a high limit in feedwater flow.
6. Low level in S/G establishes a low limit in feedwater flow.
7. FW takes Tave Control if in automatic and Diamond or Rx Demand stations are in manual.
8. Both FW Demand H/A Stations in manual reverts ICS to tracking mode.
9. FW Latching System Interlock.
10. ICS Δ TC Cotnrol while in Auto.
11. Loss of both SG feed pumps or all 4 RCP's will also cause an auto start of both motor driven EFP's.

APPENDIX C

IMPORTANT PARAMETERS

Plant power is limited to 80% with one HP heater out of service and 70% with both HP heaters out of service. However, if all condensate/condensate booster pumps are used 90% power is possible with both HP heaters OOS.

Feedpump capacity = 60% plant load.

CONDENSATE SYSTEM

System Function

Primary function of condensate system is to supply water to the feedwater system. In addition, the system deaerates, purifies, and raises the temperature of the water. Deaeration and purification is important in order to prevent corrosion and scale formation within feedwater heaters and on S/G tubes. Also heating the feedwater within the system has the overall effect of increasing plant efficiency.

Summary Description

Two of three operating motor driven condensate pumps take suction from the condenser hotwells via two lines to a common suction header. The pumps discharge to a common header and the condensate flows through a 100% condensate polishing unit and gland steam condenser to the suction header of the condensate booster pumps. Since full condensate flow is not required for the gland steam condenser (5200 gpm), a control valve is used to regulate the required flow through this condenser by maintaining a constant differential pressure across the gland steam condenser. A bypass is provided around the polishing unit. The motor driven condensate booster pumps (3) discharge to a common header which splits into two parallel trains of closed low pressure feedwater heaters. Each low pressure heater train (A and B) consists of a 14th stage external heater drain cooler FW-C-1A and 1B, a 14th stage heater FW-J-1A and 1B, a 13th stage heater FW-J-2A and 2B, and 11th stage heater FW-J-3A and 3B, a 10th stage heater FW-J-4A and 4B, and an 8th stage heater FW-J-5A and 5B. Each heater train can be isolated from service by closing a motor operated valve located upstream of the external 14th stage heater drain cooler and downstream of the 8th stage heater. A common bypass to the S/G feed pump suction header is provided in case one heater train is out-of-service. Discharge from each of the low pressure feedwater heater trains combined into a common line which feeds the S/G feed pump suction header.

A line from the discharge of the condensate pumps supplies condensate to the turbine exhaust hood sprays for cooling purposes. Sample points are located at various points in the condensate system to allow analysis of the fluid. Continuous samples can be taken at the following points: condensate pump discharge, condensate pump discharge, condensate polisher effluent, hot and cold condenser hotwells, and condensate booster pump discharge header.

Ammonium hydroxide and hydrazine are added to the condensate system in the effluent of the Cond. Polishing System. Hydrazine is used as an agent to remove the dissolved oxygen and is maintained at a small marginal excess which is detectable by analysis. The ammonium hydroxide maintains the pH of the condensate at 9.4 to 9.5, thus reducing the possibility of corrosion.

Two condensate storage tanks are incorporated into the system to supply makeup water to the condenser, to provide condensate storage capacity during system surges and supply feedwater to the emergency S/G feed pumps. The Demineralized Service Water System and the 1,000,000 gallon, TMI Unit I, tank are the supply sources for the condensate storage tanks. Demineralized water used to supply the condensate storage tanks is dumped into the condenser hotwell then transferred to the tank by the condensate pumps via the Condensate Polishing System.

System Design Requirements

The FW and CO Systems are designed to transfer condensate from the condenser hotwells to the steam generator at 110% rated flow. Each condensate/cond. booster pump pair is designed for approximately 55% of the rated cond. flow, and each main feedwater pump is designed for approximately 60% rated flow. The pumps have a capacity above rated flow to ensure an adequate regulating margin to cover any variations in feedwater flow, i.e., to meet steam flow and to restore the water content of the steam generator after a temporary disturbance.

The Feedwater and Condensate System is designed to operate without either or both feedwater heater trains. If maintenance is required either or both heater trains may be bypassed and isolated. The 3rd stage heaters downstream of the feedwater pumps may also be isolated and bypassed. 70% system flow is available with the heater drains out-of-service. However, if all condensate/condensate booster pumps are used, 90% system flow is possible with all heater drains out-of-service.

Condenser Makeup and Level Control

The Feedwater & Condensate System, as stated previously, is a closed system with the condenser hotwell, condensate storage tanks, and S/G's acting as water storage areas. Water surges will occur between these three areas with changes in load. The difference in water inventory between high and low load in the S/G can affect the condenser hotwell level by five inches.

The high level mark within the condenser should not exceed 30" as measured from the bottom of the hotwell. The level may rise to 33" before adversely affecting the deaeration capability of the condenser. Refer to Figure 1 for the condenser makeup and level control scheme.

Condenser level designations were chosen such that high level (HL) alarm and low level (LL) alarm would not be affected by an instantaneous change in S/G loading.

Condensate/Condensate Booster Pump Control

Electrically, the condensate and condensate booster pumps are wired in pairs or sets for normal operation. Condensate pump CO-P-1A and condensate booster pump CO-P-2A are the 1A-2A set, pumps 1B, 2B are the 1B-2B set, and pumps 1C, 2C are the Lc-2C sets. The six pumps can also be controlled individually by placing a single auto/manual selector switch in the manual position. For normal paired operation, the selector switch is placed in the auto position.

In normal operation, a pair of pumps is started by placing the condensate pump control switch in the start position. This starts the condensate pump. The condensate booster pump auxiliary motor driven oil pump operates continuously until the shaft driven oil pump is supplying sufficient bearing oil pressure. When condensate booster pump suction pressure and oil pressure are sufficient ($\geq$ 20# and $\geq$ 8# respectively), the condensate booster pump will automatically start.

Two pairs of condensate/condensate booster pumps are normally in operation and one pair is in the standby mode. The standby mode is accomplished by turning the condensate pump control switch to the "OFF" position and allowing it to return by internal spring action to the "NORMAL-AFTER-STOP" position.

Since 1C-2C pump set can receive power from Bus 2-3 or Bus 2-4, it has two control switches which have to be placed in the standby mode if the set is selected to be the standby set. An interlock prevents 1C-2C set from being powered by Bus 2-3 and Bus 2-4 at the same time.

To prevent any idle pump set from starting automatically, place the condensate pump control switch in the "PULL-TO-LOCK" position.

The control switches for the condensate booster pumps are only used when the auto/manual selector switch is in the "MANUAL" position. When a condensate booster pump is started individually, its control switch is placed in the "OPEN" position. When proper oil pressure (∿8#) and suction pressure (∿20#) conditions are satisfied, the booster pump will start.

Interlocks associated with the starting and stopping circuits are as follows:

A. Booster pump trip on low discharge pressure (<350#)

B. Booster pump trip on low suction pressure (<20#)

C. Booster pump trip on low bearing oil pressure (<5#)

D. Minimum recirculating valves open on booster pump start and close at ≥ 4000 gpm flow through pump. They reopen at ≤ 2100 gpm.

   1. When a booster pump <u>is not</u> running, its associated recirculating valve can be tested to open or close by using control switch on Panel 5. When pump is running, the control switch has no function, other than valve position indication.

E. Auto starts only work between condensate and condensate booster pumps when they are operated in the auto mode.

   1. A trip of one pump in the set will trip the remaining pump.

   2. The trip of one set will start the standby set.

   3. If the C pump set is selected as standby pump, it will start on the same bus as the one that tripped, unless the pump tripped on a bus under voltage. In that case, the C pump will start on the bus of the remaining operating pump.

   4. If the C pump set is running and it trips on low bus undervoltage, it must be manually started on its alternate power supply.

<u>System Alarms</u>

See Table 1.

<u>Tech Specs</u>

Refer to Section 3.7.1.3

TABLE 1

Panel 17 Annunciators		Identification	Source	Setpoint	
A-8	Hotwell Level Hi	CO-LAH-092	CO-LS-092-1	33"	↑
A-9	Condensate Pump Suction Strainer Diff. Press. Hi	CO-DPAH-1172	CO-DPS-1172-1,2,3	2" H_2O	↑
A-10	Condensate Booster Pump Bearing Oil Press. Lo	CO-PAL-4651	CO-PS-4428,4431 & 4434	7#	↓
A-11	Condensate Booster Pump Shift Driven Oil Pumps Failure	CO-EA-4657	N/A	N/A	
B-8	Hotwell Level Lo	CO-LAL-092	CO-LS-092-2	20.5"	↓
B-9	2A Condensate Pump Discharge Press. Lo	CO-PAL-066	CO-PS-066	100#	↓
E-30	Gland Steam Condenser Level Hi	CO-LAH-1138	CO-LS-1138	8" below center line	↑
C-30	Exhaust Hood Water Sprays On	CO-PAH-3944	CO-PS-3944 CO-PS-3946	30#	↑
E-8	Condensate Pump Trip	CO-EA-4649	30TA & 30TB	N/A	
F-9	Condensate Booster Pump Trip	CO-EA-4652	30T	N/A	
E-10	2B Cond. Booster Pump Oil Filter Diff. Press. Hi	CO-DPAH-4432	CO-DPS-4432	20#	↑
E-11	Gland Steam Condensate Drain Tank Level Hi	CO-LAH-7094	CO-LSH-7094	35"	↑
F-8	Condensate Pump Overload	CO-EA-4650	74	N/A	

TABLE 1 (cont'd)

	Panel 17 Annunciators	Identification	Source	Setpoint	
F-9	Condensate Booster Pump Overload	CO-EA-4654	74	N/A	
F-10	2C Cond. Booster Pump Oil Filter Diff. Press. Hi	CO-DPAH-4435	CO-DPS-4435	20#	↑
F-11	Gland Steam Condensate Drain Tank Level Lo	CO-LAL-7095	CO-LSL-7095	16"	↓
C-8	2A Condensate Storage Tank Level Hi/Lo	CO-LA-105	CO-LS-106 & CO-LS-105	31'-9" 21'-0"	↑ ↓
C-9	2B Condensate Pump Disch. Press. Lo	CO-PAL-065	CO-PS-065	100#	↓
C-11	Condensate Booster Pump & Aux. Oil Pump Not Running	CO-EA-4664	N/A	N/A	
D-8	2B Condensate Storage Tank Level Hi/Lo	CO-LA-107	CO-LS-107 & CO-LS-108	31'-9" 20'-0"	↑ ↓
D-9	2C Condensate Pump Disch. Press. Lo	CO-PAL-064	CO-PS-064	100#	↓
D-10	2A Cond. Booster Pump Oil Filter Diff. Press. Hi	CO-DPAH-4429	CO-DPS-4429	20#	↑
D-11	Condensate Booster Pump Aux. Oil Pump Overload Trip	CO-EA-4656	OLX A, B, C	N/A	

MAIN TURBINE LUBE OIL

AUTO-STOP, AND PROTECTIVE TRIP DEVICES

UNIT 2

Prepared By: T. E. Morck

INDEX

Section	Page
I. Objectives	2
II. Purpose of System	2
III. General System Description	2
IV. Associated Systems	9
Appendix "A" Fact Sheet	10
Appendix "B" Interlocks	11
Appendix "C" Important Parameters	12
Appendix "D" Technical Specifications	13
Appendix "E" References	14
Appendix "F" Drawing	15

MAIN TURBINE LUBE OIL, AUTO STOP, AND

PROTECTIVE TRIP DEVICES LECTURE OUTLINE

I. OBJECTIVES

A. To know the purposes of the Main Turbine Lube Oil and Auto Stop Systems, and the protective trip devices.

B. To be able to draw a sketch of the Lube Oil System.

C. To know the value of major operating parameters.

D. To be able to trace the system out in the plant.

E. To be able to discuss operation, control, trips, interlocks, and Tech. Specs.

II. PURPOSES OF THE SYSTEMS

A. To supply cool lubricating oil to the main turbine bearings.

B. To supply Auto Stop Oil which interfaces between the Lube Oil System protective trip devices, and the EHC high pressure fluid systems.

C. To supply a redundant source of oil to the H_2 Seal Oil System.

D. To trip the turbine if a potentially harmful condition exists.

III. GENERAL SYSTEM DESCRIPTION

A. Main Shaft Driven Oil Pump.

The main oil pump impeller is mounted on the governor end of the HP turbine rotor. The oil discharged by the main pump during normal operation is used for the following purposes:

1. To provide an oil supply to the "AUTO-STOP" oil system.

2. To provide an oil supply for thrust bearing trip devices.

3. To provide a seal back-up system to the H_2 Seal Oil System.

4. To operate the oil ejector which supplies oil for:

   a. Bearing lubrication

   b. Main oil pump suction

   c. L.P. Seal oil backup

B. Lubrication

1. Startup and shutdown periods:

   AC turning gear oil pump TGP and seal oil back-up pump SOP supply all oil requirements. Both pumps are automatically controlled and start when bearing oil pressure drops to 13 psig. DC Motor driven oil pump EOP serves as emergency backup to AC turning gear oil pump and starts when bearing oil pressure drops to 10-11 psig or generator brks open and an overload condition exists on TGP.

   Switches controlling these pumps are located on turbine control panel (pnl. 5) in control room. As turbine reaches normal speed the main oil pump discharge pressure takes over and the AC turning gear oil pump and seal oil backup pump can be turned off and then spring returned to Auto under control of bearing oil pressure switch.

2. Normal Operation

   The shaft driven oil pump normally supplies oil at 320-380 psig to the oil ejector which increases oil flow with a corresponding decrease of pressure. The majority of oil flows through the lube oil coolers to the bearings, while the rest supplies the oil pump suction and the items listed under "A" above.

C. Reservoir and Exhauster

The 10,000 gal. Main Turbine Lube Oil Reservoir is located on the 305

elevation of the Turbine Building. It is supplied with a vapor exhauster (LO-E-1) to eliminate oil fumes in the L.O. reservoir. The discharge of the exhauster is piped through a mist eliminator to separate the oil mist from the discharge air.

D. Oil Coolers

Two oil coolers are provided, connected by a tandem operated three-way valve to switch from one cooler to the other, as desired. This valve controls both the oil inlet and outlet to the coolers. To switch coolers, the valve handwheel must be backed-off, and the lever thrown to point at the inoperative cooler.

Each cooler also has a normally open interchange valve to insure the inoperative cooler is filled with oil. The coolers are provided with a sight flow in the vent line back to the reservoir to indicate when the coolers are full.

The amount of water circulating through the oil coolers should be regulated to maintain the temperature of the oil leaving the hottest bearing below 160°F. In general an oil return temperature of 140° to 160°F is considered good practice. Temperature indication and control station for the cooling water regulating valve are provided on Panel 5.

E. Rotor Zero Speed Indicator

The rotor zero speed indicator's function is to indicate that the rotor has ceased to rotate and that the turning gear can be safely engaged.

A rotating disc is mounted on the turbine rotor shaft in such a position as to allow the equally spaced holes drilled near its periphery to pass between sending nozzles and receivers. Two pressure switches are connected

to the receivers. When the rotor and disc reach zero speed, one sending nozzle lines up through the hole, to build a receiver pressure up to the value necessary to operate the pressure switch. Oil for this function is provided off the Turning Gear Oil pump (TGP).

F. The Auto-Stop oil serves as an interface between the Lube Oil System and the HP EHC control system. The Auto-Stop oil, supplied by the TGP-SOP during shutdown and the Main Oil pump normally, acts on the hydraulic diaphram operated interface emergency trip valve to latch the EHC system, and permit the turbine steam valves to open. When the Auto-Stop oil is drained by operation of one of the protective trip devices, the interface emergency trip valve will open, releasing EHC HP oil to drain, and closing the turbine steam valves.

G. Overspeed Trip Mechanism

The overspeed trip mechanism consists of an eccentric weight mounted in a transverse hole in the turbine rotor extension shaft. The weight is offset from the center so that centrifugal force tends to move it outward. Normally the weight is held in position by the compression of a spring. When the turbine overspeeds to a point at which the mechanism is set to operate (1998 RPM), the spring compression is overcome by the centrifugal force of the rotor speed, and the weight moves out to strike a trigger which trips the overspeed trip valve and releases the auto-stop oil and operating fluid to drain. After the mechanism has tripped, it must be reset manually by moving the manual trip and reset lever to the reset position. This can be accomplished from the front standard, or with the "LATCH" pushbutton on the Westinghouse Control Panel.

However, it is impossible to reset the trip until the rotor speed decreases to the speed where the weight returns to its normal position (2% above normal speed).

The overspeed device can be tripped manually by moving the manual trip and reset lever located on the front of the pedestal, from the normal to the tripped position.

Testing: The overspeed trip mechanism may be tested without actually overspeeding the turbine. The test may be performed by admitting oil under the eccentric weight and measuring the pressure at which the weight moves outward and strikes the trip trigger.

H. Low Bearing Oil Pressure Trip

Bearing oil is supplied to a spring-loaded diagragm located in the protective trip block. Should the bearing oil pressure decrease to a value of less than 5-7 psig, the bearing oil diaphragm will be forced down which raises the protective trip dump relay releasing the auto-stop oil and high pressure operating fluid to drain.

Testing: This trip may be tested by slowly bleeding off Lube Oil pressure under the diaphragm and noting at what pressure the dump relay actuates.

I. Low Vacuum Trip

This device also utilizes a spring-loaded diaphragm located in the protective trip block which is exposed to condenser vacuum. When the exhaust pressure rises to 8-12 in HG abs. the diaphragm will move raising the protective trip dump relay releasing the auto-stop oil and high pressure operating fluid to drain. A latch is provided to permit starting the unit when the

vacuum is low. The latch automatically falls out of engagement when the vacuum reaches a value of 20-24 inches of mercury, and will trip thereafter at a normal value of 18-22 inches of mercury, unless relatched. However, it will function even though the latch is engaged, should a positive exhaust pressure of 1.0 to 2.0 psig develop during the starting cycle.

Testing: This trip may be tested by bleeding air under the diaphram, and noting at what pressure the dump relay actuates.

J. Thrust Bearing Trip

This device warns the operator of excessive rotor movement in the axial direction, and shuts down the unit if the axial movement increases to the point where serious damage to the turbine may occur. This device consists of two small nozzles, which have discharge openings close to the thrust collar faces. Oil is supplied to each nozzle through orifices and the pressure in the line through ball check valves

is piped to a spring loaded diaphragm in the protective block relay. Should excessive thrust bearing wear occur, the thrust bearing collar will move toward one of the nozzles and the pressure in the line will increase. When this pressure rises to 35 psig, a pressure switch will close and sound an alarm. Should wear in the same direction continue, the pressure will continue to increase and when it reaches 75-80 psig the diaphragm will move, raising the protective trip dump relay, releasing auto-stop oil and high pressure operating fluid to drain, shutting down the turbine.

Testing: This trip may be tested by admitting high pressure oil under the diaphram and noting at what pressure the dump relay actuates.

K. Testing the Protective Trip Devices

A lever is provided on the left side of the front standard for testing the trip devices during normal operation. This lever prevents the auto-stop oil from draining and releasing the EHC fluid to drain. This lever must be held continuously throughout the test until the trip devices returns to its normal non-trip position.

L. Solenoid Trip

A solenoid trip is provided, which when energized, raises the protective trip dump relay releasing the auto-stop oil and high pressure operating fluid to drain. This feature permits tripping the unit from some remote point, (control room) or by means of protective relays in the generator circuit. A solenoid trip switch is used to indicate to the operator that the solenoid is energized. For redundancy, two solenoids are used and are energized under any of the following conditions: (see 3079 sh. 2).

1. Generator and main transformer overall differential (3071 Sheet 3 and 12) 86O
2. Generator Differential OC and neutral ground (3071 Sheet 4) 86G
3. Generator Neutral Grd. Overvoltage (Low Freq.) (3071 Sheet 4) 86I
4. Generator Neutron Grd. Overcurrent (3071 Sheet 4) 51N
5. Generator Negative Phase Sequence (3071 Sheet 4) 46NS
6. Main Transformer 2A or 2B OC Differential (3071 Sheet 5 and 5B) 86/2A and 86/2B
7. Main Transformer 2A or 2B Neutral Overcurrent (3071 Sheet 5 and 5B) 86/2A-2 and 86/2B-2
8. Main Transformer 2A and 2B Sudden Pressure (3071 Sheet 5 and 5B) 86/2A-1 and 86/2B-1

9. 500 KV line fault (GAI dwg. C-229-068 and C-229-103) 86TT13 and 86CT13.

10. Loss of DC power supply output on EHC control

11. Reactor trip

12. 94 relay actuation from fault between generator and breaker

13. Trip of both main feed pumps

14. IEOPS overspeed

15. Turbine overspeed @ 1998 rpm

16. Manual pushbutton actuation on control panel

IV. ASSOCIATED SYSTEMS

1. Secondary Services Closed Cooling Water cools the lube oil coolers.

2. Lube Oil Purification and Transfer System fills the Main Turbine LO reservoir from Unit 1 and constantly withdraws and purifies oil from the reservoir.

3. Hydrogen Seal Oil is backed up by the main oil pump and the AC Seal Oil Back-Up Pump (SOP).

4. Main Turbine EHC System is latched by the Auto-Stop Oil allowing the turbine steam valves to open.

5. Condenser Vacuum pressure provides the input to the low vacuum protective trip device.

APPENDIX A

FACT SHEET

1. 100% shaft mounted main lube oil pump
2. Two AC pumps start on low LO pressure or from single control switch on Panel 5
3. A DC pump starts on low-low LO pressure or from control switch on Panel 5
4. Two 100% capacity oil coolers cooled by SC Cooling water control station is on Panel 5
5. Tandem oil cooler inlet/outlet valve lever points to inoperative cooler
6. Oil reservoir supplied with vapor exhauster to eliminate oil fumes in Turbine Building
7. Oil gravity flows from the bearing pedestals through a fine mesh screen into the reservoir.
8. Auto-Stop oil latches the HP EHC fluid, allowing the turbine steam valve to open
9. The "LATCH" pushbutton on Panel 5 latches the Auto-Stop oil and the vacuum trip
10. While testing the protective trip devices, the test lever must be held continuously or a turbine trip <u>will</u> result
11. The following indication is provided at the front standard:
    a. Main pump suction pressure
    b. Main pump discharge pressure
    c. Bearing header pressure
    d. Test gages measuring the pressures at the following:
        1. Vacuum Trip Pressure
        2. Thrust Bearing Trip Pressure
        3. Bearing Oil Trip Pressure
        4. Overspeed Oil Test Pressure

APPENDIX B

INTERLOCKS

There are no interlocks associated with this system

APPENDIX C

IMPORTANT PARAMETERS

1. Normal main oil pump discharge pressure is 320-380 psig
2. Normal main oil pump suction pressure is 10-45 psig
3. Normal AC Turning Gear Oil Pump discharge pressure is 25 psig
4. Do not operate the lube oil pumps if the oil temperature is below 50°F
5. Do not put the unit on turning gear if the LO temperature is less than 70°F
6. Bearing metal temperatures should not exceed 225°F. This corresponds roughly to a 140-160°F bearing oil outlet temperature
7. The normal oil temperature out of the coolers is 110-120°F
8. The TGP and SOP should start when the LO header pressure decreases to 13 psig
9. The DC EOP should start when the LO header pressure decreases to 10 psig
10. The unit should trip when the LO header pressure decreases to 5-7 psig
11. The unit should trip when condenser vacuum decreases to 8-12" Hg absolute
12. The unit should trip when the thrust bearing oil pressure increases to 75-80 psig
13. The unit should trip at 1998 rpm
14. The main turbine LO reservoir volume is 10,000 gals.

APPENDIX D

TECHNICAL SPECIFICATIONS

No Tech. Specs. are associated with this system.

APPENDIX E

REFERENCES

1. Westinghouse Instruction Manual, Vol. 1, Spec. 1.00
2. Westinghouse Dwg. 721-J-843, B&R File 1-00-0210
3. B&R Elementary Dwg. 2079 Sheet 2.
4. GPU Start-Up Lecture Outline

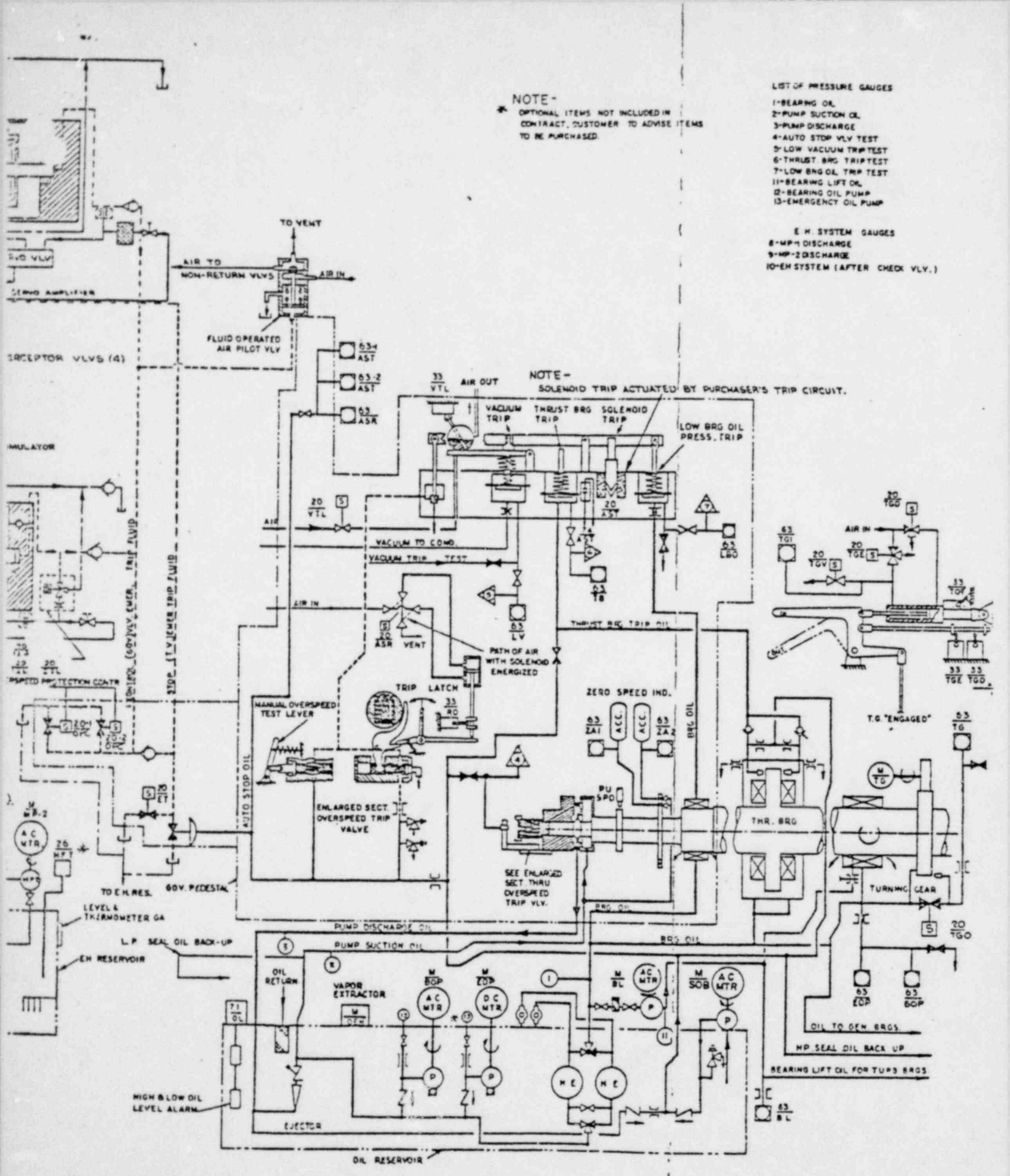

Excerpt from Westinghouse Drwg. 721-J-843.

GENERATOR HYDROGEN SEAL OIL SYSTEM

UNIT 2

Prepared by: N. A. Williams

Generator Hydrogen Seal Oil System

Lecture Outline

I. OBJECTIVES

A. To know the purposes of the Generator Hydrogen Seal Oil System

B. To be able to draw a sketch of the Seal Oil System

C. To know the value of the major operating parameters

D. To be able to trace the system out in the plant

E. To be able to discuss operation, control, trips, interlocks and applicable Technical Specifications

II. PURPOSE OF THE SYSTEM

A. To provide a sealing system to contain hydrogen within the confines of the main generator for all modes of operation from turning gear to full power

B. Lubricate the seals

III. GENERAL SYSTEM DESCRIPTION

A. Generator Gland Seals

Seals are provided at each end of the generator shaft to maintain a gas tight enclosure. There is a double seal arrangement at each end of the generator fed with seal oil from two essentially independent oil systems (hydrogen side and air side). See Appendix F.

Oil is supplied to two annular grooves in the gland seal ring. Oil flows from these grooves along the shaft in the clearance between the shaft and the inner diameter of the seal rings. Seal oil pressure is

1. Provide a means of draining excess oil or adding oil to the hydrogen side seal oil system by means of a pair of level operated valves.

2. Provide a suction source for the hydrogen side seal oil pump

E. Seal Oil Pumps

The air side seal oil pump (SO-P3) receives its oil supply from the bearing and air side seal oil drain. It pumps part of this through a seal oil cooler to the air side gland seal ring. The remaining part is pumped back through a regulator to the suction side of the pump thus maintaining a seal oil pressure 12 psi above machine gas pressure.

The hydrogen side seal oil pump (SO-P1) receives its oil supply from the hydrogen side drain regulator and receiver tank. It pumps part of this oil through a seal oil cooler and a regulating valve (at each seal) to the hydrogen side gland seal ring. The regulating valve maintains hydrogen side seal oil pressure equal to air side seal oil pressure (within $\pm$ 2 inches H_2O). A manually throttled bypass line return excess pump discharge oil to the suction side of the pump.

F. Seal Oil Backup Pumps

1. Air Side Seal Oil pump has four sources of backup, three of which will maintain 75 psig generator gas pressure. In order of operation they are as follows:

   a. Main Oil Pump on turbine shaft

   b. Seal Oil Backup Pump (SOB) mounted on main oil reservoir

out of service. When operating in this mode, hydrogen purity in the generator should be reduced to reduce hydrogen consumption as hydrogen out leakage and air in leakage will be greater.

G. Generator Bearing Drain Loop Seal

A loop seal is provided in the combined generator bearing oil drain line before it enters the turbine bearing oil drain system. The purpose of this loop seal is to prevent the hydrogen in the generator from escaping into the main oil reservoir in the event of failure of the generator hydrogen shaft seals, which might result in a sudden surge of hydrogen thru the drain line. The loop seal thus provides protection against the remote possibility of shaft seal failure from any cause whatsoever, and as such represents an additional safety feature. A vent to the atmosphere is provided on the upstream or inlet side of this loop so that any hydrogen flowing thru the bearing drain line will be carried out of the system before sufficient pressure can be built up to blow the oil out of the loop seal and allow the hydrogen to reach the main oil reservoir.

Since this loop seal presents an obstruction to the uninterrupted flow in the bearing drain system, the vapor extractor on the main oil reservoir is not able to ventilate that part of the generator bearing oil drain system on the upstream side of the loop seal. Therefore, an additional vapor extractor assembly consisting of extractor, control bypass, and check valve is provided as a part of the loop seal assembly to provide the negative pressure in the generator drain system on the upstream side of the loop seal required for normal operation.

APPENDIX A

FACT SHEET

1. Double seal arrangement at each end of the generator shaft supplied by two independent oil sealing systems.

2. Three backup systems exist for air side seal oil system each of which will maintain nominal generator gas pressure and allow continuation of 100% power operations. These backup systems are:
   a. Shaft mounted Main LO Pump
   b. Seal Oil Backup Pump mounted on main oil reservoir
   c. Air Side Seal Oil Backup Pump at seal oil unit

3. Last backup system for air side seal oil is the turning gear oil pump. This will maintain a minimal (2 psig) machine gas pressure requiring shutdown.

4. There is no backup for the hydrogen side seal oil system. Operation at full power may continue without the hydrogen side seal oil system provided machine gas purity is reduced to conserve hydrogen.

APPENDIX C

IMPORTANT SYSTEM PARAMETERS

1. Machine gas pressure (hydrogen) is 75 psig

2. Air side seal oil pressure is 87 psig (12 psig above machine gas pressure)

3. Hydrogen side seal oil pressure is 87 psig (maintained at $\pm$ 2 inches H_2O from air side seal oil pressure

4. Seal oil temperature at oil discharge of coolers should be maintained at 100°F. Allowable range is 80 to 120°F.

5. The main turbine shaft mounted oil pump is the **primary** source of air side seal oil backup whenever the main 'turbine' is greater than 2/3 full speed.

6. When air side seal oil pressure decreases to 8 psig greater than machine gas pressure, the main turbine shaft mounted oil pump or the reservoir mounted seal oil backup pump will provide seal oil.

7. When air side seal oil pressure decreases to 5 psig greater than machine gas pressure, the air side seal oil pump, (SO-P2) mounted on the seal oil Unit will provide seal oil.

APPENDIX E

REFERENCES

1. Westinghouse Instruction Manual 20792- Seal Oil System

2. Westinghouse Drawing 614F177-5 (B&R File No. 1-00-0504)

3. Operating Procedure 2106-3.3

4. Westinghouse Drawing 721J843 (B&R File No. 1-00-0210)

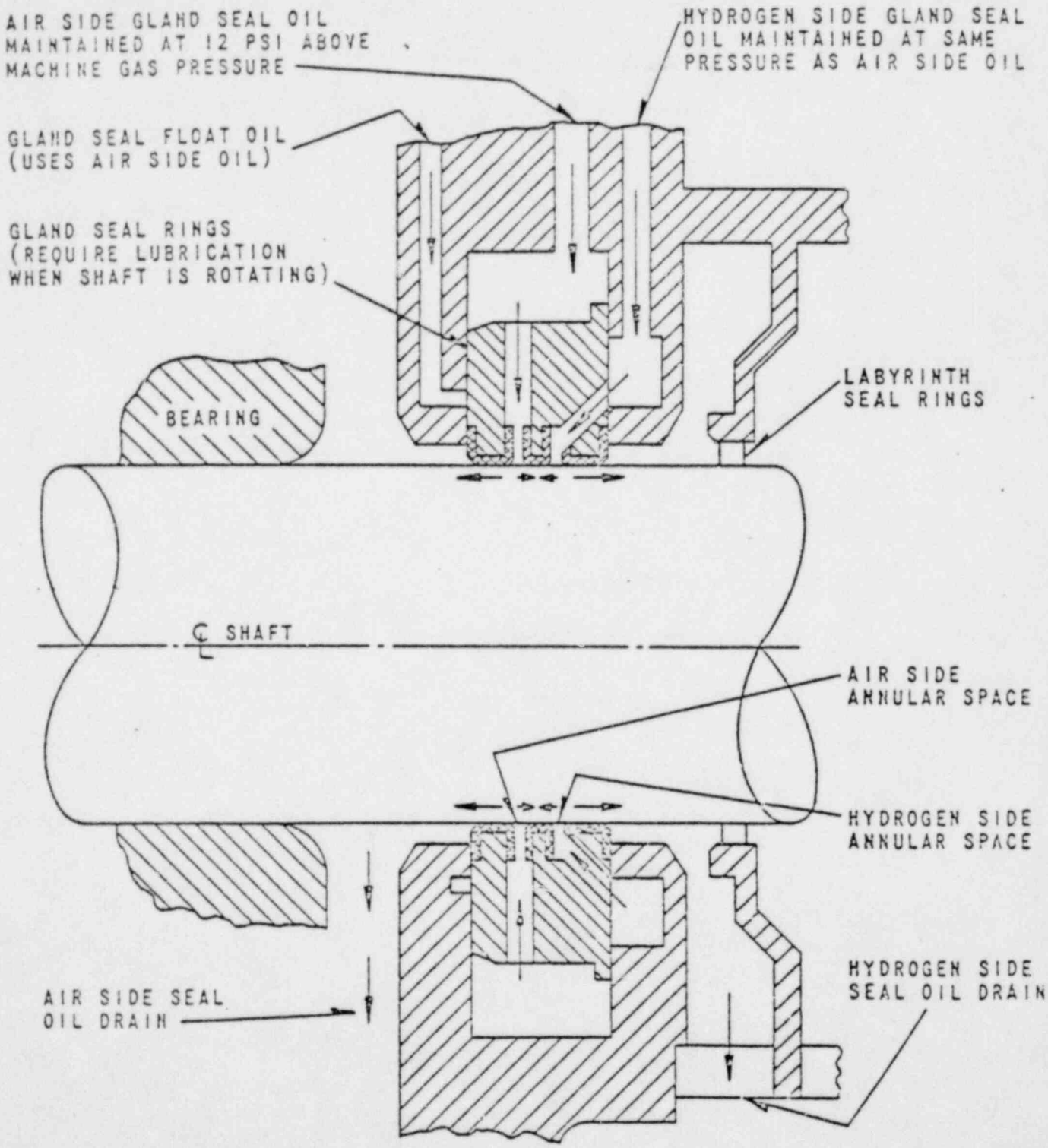

DIAGRAM OF GLAND SEAL

Dwg. 521A468 Diagram of Gland Seal FIG 4

GLAND STEAM SEAL SYSTEM

UNIT 2

repared by
homas E. Morck

GLAND STEAM SEAL SYSTEM
LECTURE OUTLINE

I. Objectives:

A. To know the purpose of the Gland Steam Seal System.

B. To be able to draw a sketch of the Gland Steam Seal System.

C. To know the values of major operating parameters.

D. To be able to trace the system out in the plant.

E. To be able to discuss operation and control of the Gland Steam System.

II. Purpose of the System:

A. Prevents air leakage into or steam from the main and feed pump turbine cylinders along the rotor.

III. General System Description:

A. Two Supplies

1. Gland Steam can be supplied by the Auxiliary Steam System during startup or by Main Steam after approximately 40% power.

B. Inlet Regulating Valve

The inlet regulating valve (air operated MS-V267), takes steam from ahead of the MSIV's or the Aux. Steam header and maintains a constant 125 psig in the gland steam header. It is provided with motor operated isolation valve and bypass valve in the event of a malfunction.

C. Gland Pressure Regulating Stations

There is one regulating station for the HP Turbine seals, four stations for the LP turbines - one at each journal bearing, and one at each feed pump turbine. These pressure regulating stations decrease Gland Steam header pressure down to 1.5 psig for the main turbine seals, and to 3-5 psig for the feed pump seals. The air operated regulating valves are provided with manual isolation and bypass valve in the event of a malfunction.

D. Valve Leak-Offs

1. Main Turbine

a. The throttle valve high pressure stem leak-offs are connected

IV. Other Systems Associated with the Gland Steam System.

1. Condensate System which desuperheats the steam and removes heat from the Gland Steam condenser.

2. Auxiliary Steam System supplies steam during startup.

3. Main Steam System is the normal steam supply.

Appendix B

INTERLOCKS

There are no interlocks associated with the system.

Appendix E

REFERENCES

1. Westinghouse Instruction Book, Volume 1 and 2, Burns and Roe Spec. 1.00.
2. DeLaval Instruction Book, Burns and Roe Spec. 10.00
3. Burns and Roe Flow Diagram 2002, Main and Reheat Steam.
4. Burns and Roe Flow Diagram 2005, Feedwater and Condensate.
5. Burns and Roe Flow Diagram 2010, Condenser Air Extraction.
6. Burns and Roe Flow Diagram 2634, Gland Steam Seal System.

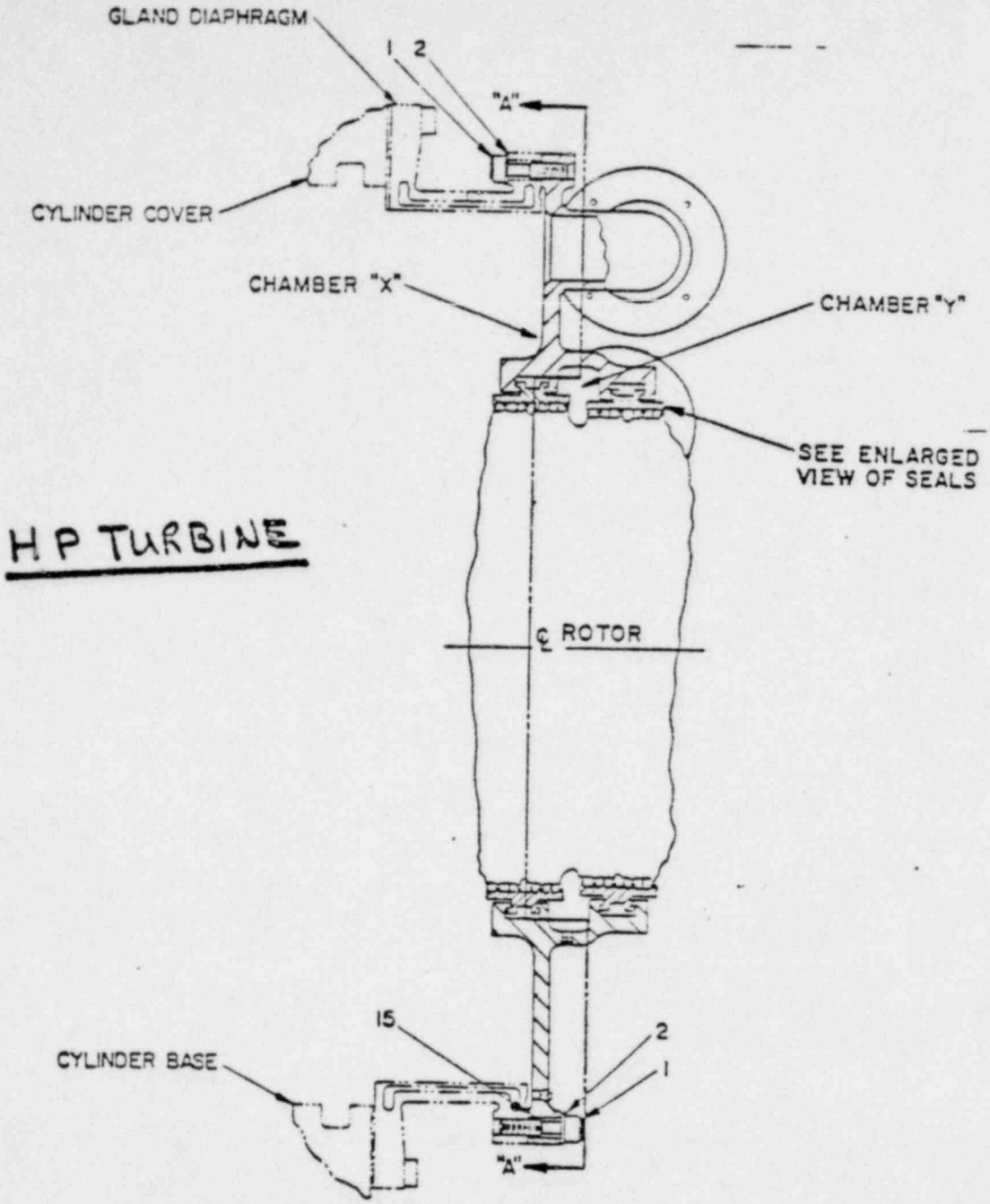

SECTION "B"-"B"

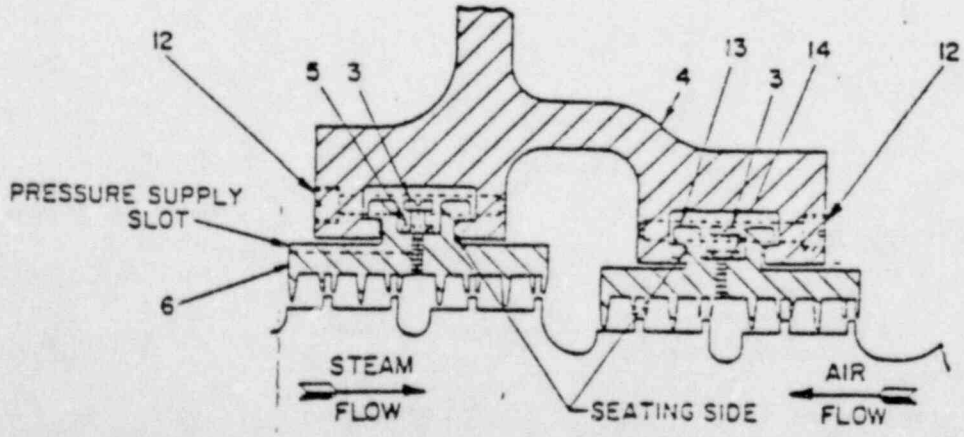

(ENLARGED)

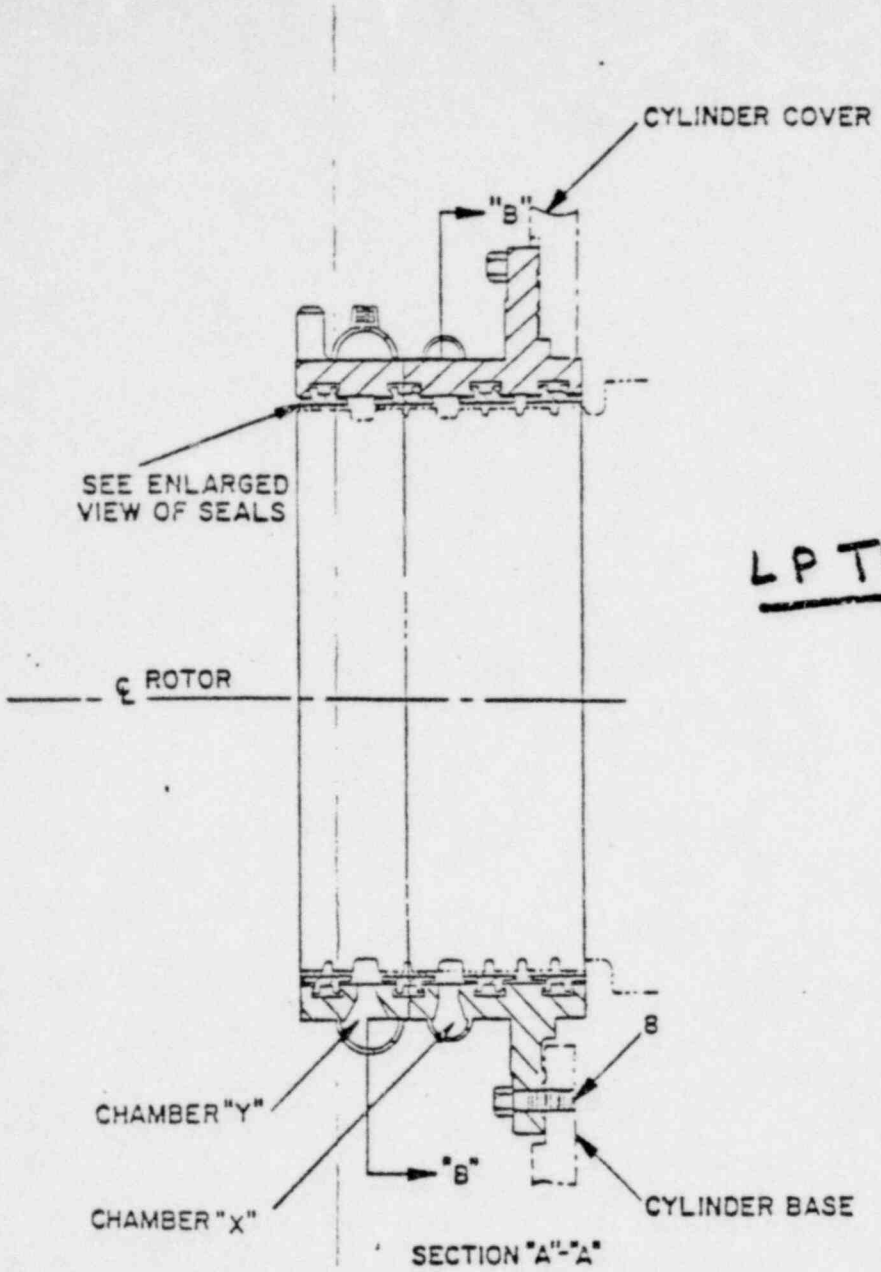

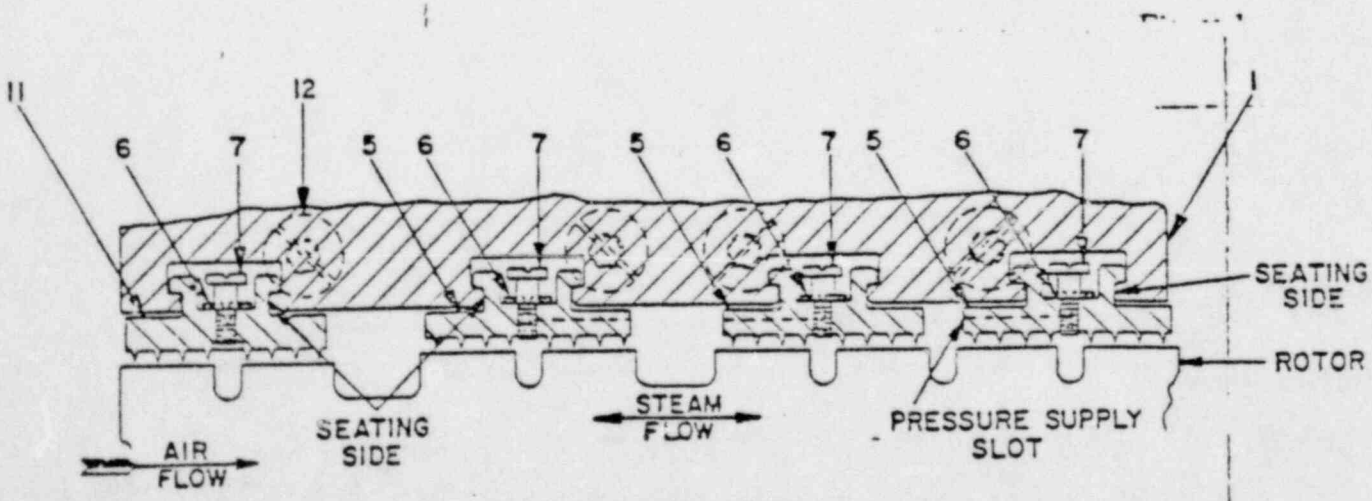

ENLARGED VIEW OF SEALS

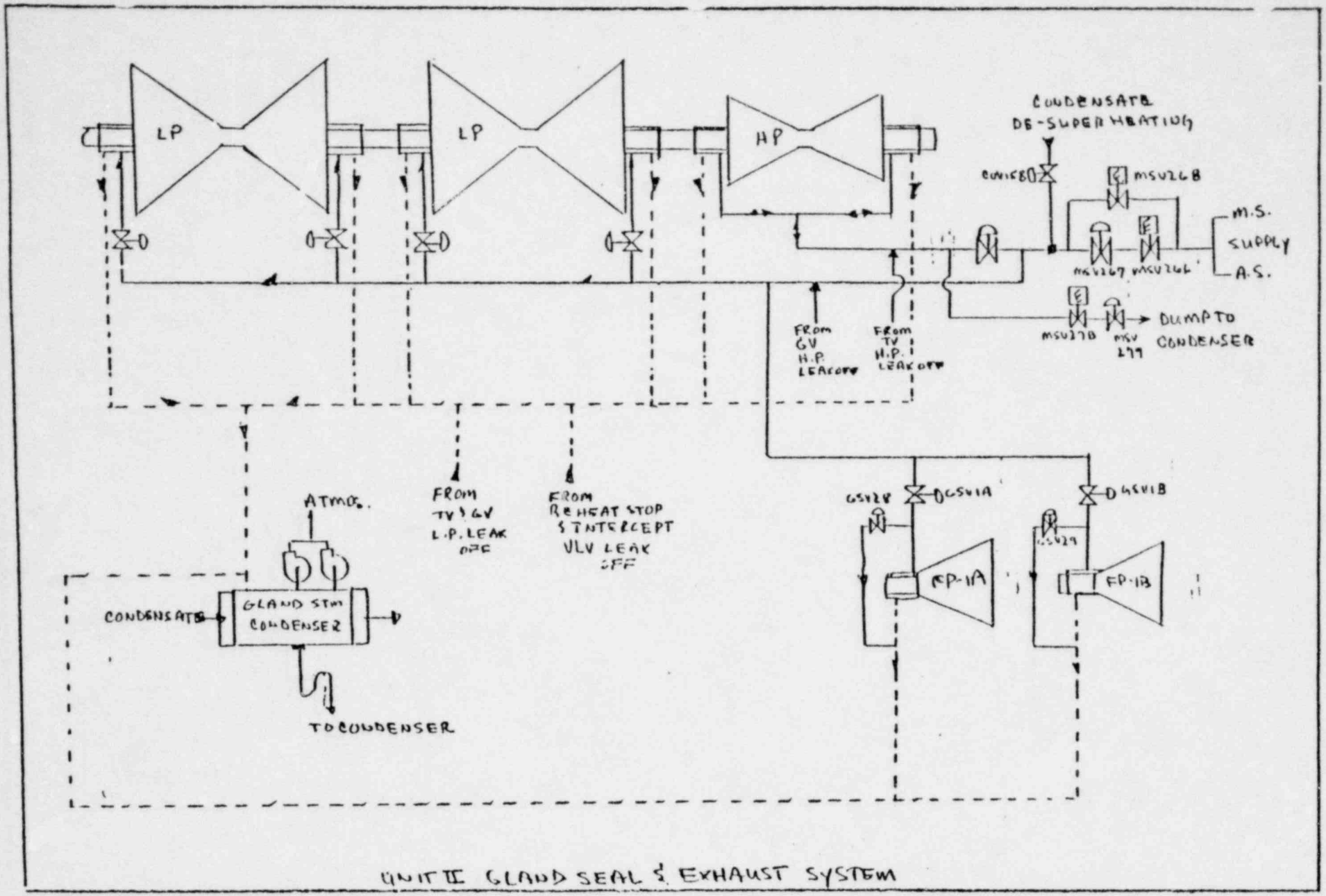

UNIT II GLAND SEAL & EXHAUST SYSTEM

MAIN TURBINE LESSON PLAN

Prepared By: T. E. Morck

Date : November 1976

INDEX

SECTION	PAGE
I. OBJECTIVES	2
II. PURPOSES OF SYSTEM	2
III. GENERAL DESCRIPTION	2
A. Basic Information	2
B. Steam Chest	3
C. High Pressure Turbine	3
D. Moisture Separator Reheater	4
E. Low Pressure Turbine	6
F. Bearings	7
G. Turning Gear	7
H. Exhaust Hood Spray	8
I. Turbine Supervisory Instruments	8
J. Load Changes	12
IV. OTHER SYSTEMS ASSOCIATED WITH MAIN TURBINE	13

APPENDIX A	System Fact Sheet
APPENDIX B	Interlocks
APPENDIX C	Important System Parameters
APPENDIX D	References
APPENDIX E	Figures

MAIN TURBINE LECTURE OUTLINE

I. OBJECTIVES

A. To know the flow path of the steam, the basic parts of the turbine, the function of the Supervisory Instruments, and the basic operational parameters.

B. To be able to draw a sketch of the steam flow path.

C. To be able to trace and identify supporting systems and components out in the plant.

D. To be able to discuss operation, control, trips, and interlocks associated with the main turbine.

II. PURPOSES OF THE SYSTEMS

A. The turbine changes the high temperature and pressure steam energy from the NSSS system, into rotational energy which the generator then converts into electrical energy.

B. The Moisture Separator Reheaters (MSR's) remove the moisture in the HP turbine exhaust steam and superheat it to approximately 505°F before the steam enters the LP turbines.

C. The Turning Gear rotates the turbine rotor during shutdown periods to minimize rotor bow.

D. The Exhaust Hood Sprays limit the turbine exhaust hood temperature below 160°F.

E. The Turbine Supervisory Instruments monitor turbine rotor and casing parameters, and indicate and alarm on panel 16.

III. GENERAL DESCRIPTION

A. Basic Information

The turbine is a 926 MW, three casing, tandem compound, four flow, condensi

Westinghouse NSSS turbine. It operates at 1800 rpm with inlet conditions of 885 psig and 570°F, and exhausts to 2.5" Hg Abs.

B. Steam Chest

The only way the turbine can supply more or less energy is to increase or decrease the steam flow to the turbine. This steam regulation is the function of the two steam chests (See Fig. #1), one located on each side of the HP turbine.

Each steam chest is made up of two throttle valves, two control valves, and crossties to the other steam chest. During startup, the control valves are fully open, and steam flow is controlled by the throttle valves. At approximately 1700 rpm, the steam control function is transferred to the control valves, and the governor valves fully open. Figure 2 shows the W numbering of the valves, and the opening sequence of the governor valves. Figure 3 shows a cut away of the throttle valves, and Figure 4 shows a cut away of the control valves.

C. High Pressure Turbine

The steam chest outlets are connected to the high pressure casing through four inlet pipes, each of which connects to a nozzle chamber enclosed within the high pressure casing. Two of these inlet connections are in the base and two are in the cover. The steam flows axially in both directions from the nozzle chambers, through the blading to the four exhaust openings (two at each end) in the casing base, See Figure 5, 6, 7, & 8.

The first row of HP blading is made of"Rateau blades," (impulse). The energy imparted to these blades comes from the momentum of the

steam. All the other blades are "Reaction Blades", and get their energy from the expansion and turning of the steam.

There are 8 stages in the HP turbine. Extraction steam for FW heating is taken off at the 3rd stage, and from the HP turbine exhaust, which is 8th stage.

D. Moisture Separator Reheaters (MSR)

The high pressure turbine exhausts through four "Cross-Under" pipes to four Moisture Separator Reheaters (MSR), See Figure 9, where it flows through chevron type moisture separators, two stages of reheat and then through Reheat Stop Valves, Interceptor Valves, and into the LP turbines. Reheat steam to the feedpump turbines also comes off two of the MSR's before the Rehat Stop Valves.

Figure 10 shows the major flow paths associated with the MSR's. Third Stage extraction steam supplies the first stage reheater, and main steam supplies the second stage reheater. The MSR drains to the heater drain tank, with a high level dump to the condenser. Both of the tube bundles drain to a drain pot, and then cascade to the 3rd stage reheater, with a high level dump to the condenser.

Moisture Separator Reheater Temperature-Control

The first stage reheat valves (supply, vent, and drain) are opened before steam is admitted to the turbine generator and remain open as long as the turbine is in operation. No other control is exercised over the first stage reheater.

The reheater control system for the second-stage reheater system meets the following requirements:

1. Due to thermal stresses and possible distortion of the LP turbine stationary parts, maximum instantaneous temperature change of steam to the LP turbine inlet (reheater outlet temperature) should be limited to 100°F. Except for such an instantaneous change, the rate of change of this temperature should not exceed 250°F per hour.
2. The possibility of overheating the last two rows of blades of the LP turbine(s) requires that crossover temperature be limited to a maximum of 400°F for continuous operation below 10% load.

Modes of Operation on MSR Temp. Control

The 2nd stage reheater controller is located on panel 16, See Fig. 11. Prior to starting the turbine the controller "Power On" button is pushed. This resets the unit.

Roll and load the turbine per startup and loading curve.

At 10% load open purge valves and purge noncondensables from reheater tube bundle

At 35% load open main steam shutoff valve and push "Ramp" button. This will activate the circuit that controls the opening of the reheater control valve over a period of one hour to provide a uniform rate of increase in the steam temperature to the LP turbines. For continued operation at or below 10% load, the reheat control valves must be adjusted to obtain an LP maximum inlet temperature

of 400°F within approximately 15 minutes after reaching 10% load. If this mode of operation is desired, push the "400°F" button. If load is increased from continuous load at 10% or below, push the "Ramp" button at 35% load.

Hot Start-When the LP turbine inlet metal temperature is 300°F and above, push the "Hot Start" button. When the unit load output reaches 35%, push the "Ramp" button which will ramp the reheat control valves to full open from the 400°F position.

Reset Button-If the startup following a shutdown requires starting in the cold start mode, push the "Reset" button to close the reheater control valves.

"Manual Button" - The manual mode is to be used in the case of a failure in the electronic system. In this case the operator would push the "Manual" button and then position the valves with the "Valve Positioner" knob.

E. Low Pressure Turbines

The reheated steam from the MSR's flows through Reheat Stop Valves, and Interceptor Valves in "Cross Over" pipes and into the two LP turbines.

The purpose of the Reheat Stop Valves, and Interceptor Valves is to limit the flow of steam from the MSR's to the low pressure turbines after a load rejection.

The steam enters the LP turbine from the top and flows into 2 semi-circular blocks. From there, it expands in both directions through 8 rows

of Reaction Blading and exists downward to the condenser, See Fig. 12. Extraction steam is taken out at the 10th, 11th, 13th, and 14th stage.

The LP turbine exhaust hoods are protected from overpressurization by a low vacuum turbine trip, and by rupture diaphrams which will rupture at 5 psig.

F. Bearings

The 9 turbine-generator journal bearings are numbered from the governor to the generator end. Lubricating oil is introduced to the bearings at 2 o'clock and is carried around by the wiping action of the shaft. See Fig. 13 and 14.

Two bearings, #3 and #4, are supplied with bearing lift oil. This high pressure oil is supplied at the bottom of the bearings, and lifts the shaft making it easier to rotate on turning gear. See Fig. 15.

The thrust bearing, located between journal bearings 4 and 5, serves to anchor the axial position of the rotor. From this point, the shaft is free to expand in either direction. The thrust bearing also absorbs any axial thrust due to unbalanced loading of the turbine.

The thrust bearing, See Fig. 16, consists of self leveling shoes located on either side of a collar machined on the shaft.

G. Turning Gear

The turning gear minimizes rotor bow after shutdown or before startup, by rotating the shaft at about 2.5 rpm. It should be used after shutdown at least until the rotor temperature decreases to between 300 and 400°F.

With the control switch for turning gear in Auto,as the rotor speed

decreases to 600 rpm, the oil solenoid valve, 20/TGO, will open to supply lubrication to the gears. At zero speed, the engage air solenoids will energize, stroking the air cylinder to engage the gears. If sufficient bearing lift oil (850 psi) and lube oil (5 psi) pressure exists, the motor will then start. If the gear teeth were not fully engaged, they will slip and then engage.

During startup, as the rotor speed, increases above turning gear the gears will move apart, and the disengaged air solenoid will energize to back off the gears. The motor must manually be turned off.

The motor is also supplied with a square drive on the top of the shaft for manual operation if power is lost. See Figures 17 and 18.

H. Exhaust Hood Sprays

The exhaust hood sprays are designed to cool the LP turbine exhaust hoods at low flow or low vacuum conditions.

They are controlled by a local pushbutton, or automatically by an exhaust hood temperature controller set at 160°F.

Condensate is supplied from the condensate pump discharge header, and flows through a ring of spray nozzles around each LP turbine exhaust.

I. Turbine Supervisory Instruments

1. Startup Temperature Recorder, Panel 16

This records turbine metal and steam temperature. From this recorder comes the first stage metal temperature which is the limiting condition for startup times.

2. Turbo-Graf Casing Expansion & Rotor Position Recorder

As a unit is taken from its cold condition to its hot and loaded state, the thermal changes in the casings will cause it to expand. Because one end of the unit (near the center-line of the low pressure turbine(s))is secured to the foundation, the casings will expand axially away from this anchored point. The opposite end of the unit (the governor pedestal) is designed to move freely along lubricated longitudinal keys. If the free end of the unit is hampered from sliding smoothly along the guide keys as the casings expand, serious damager to the unit may result.

The casing expansion meter measures the movement of the governor pedestal relative to a fixed point (the foundation). It indicates expansion and contraction of the casings during starting and stopping periods, and for changes in load, steam temperatures, etc. Should it fail to so indicate during these transient conditions, the situation should be investigated. The relative position of the governor pedestal, as indicated by this instrument, should be essentially the same for similar conditions of load, steam conditions, vacuum,etc.

The rotor position instrument measures the relative axial position of the turbine rotor thrust collar with respect to the thrust bearing support. The thrust collar exerts a pressure against the thrust shoes, which are located on both sides of the thrust collar. A small axial displacement of the rotor occurs as the electrical load on the

unit changes. Wear on the thrust shoes results in an axial movement of the rotor, which is indicated on this instrument. The instrument is equipped with an alarm which will sound if the rotor moves beyond a predetermined distance.

3. Turbo-Graf Differential Expansion Recorder

When steam is admitted to a turbine, both the rotating parts and the casings will expand. Because of its smaller mass, the rotor will heat faster and therefore expand faster than the casings.

Axial clearances between the rotating and the stationary parts are provided to allow for differential expansion in the turbine, but contact between the rotating and stationary parts may occur if the allowable differential expansion limits are exceeded.

The purpose of the differential expansion meter is to chart the relative motion of the rotating and stationary parts. It gives a continuous indication of the axial clearance while the turbine is in operation. The instrument is equipped with an alarm which will sound if the limits of axial clearances are approached. As the rotating and stationary parts become equally heated after a transient condition, the differential expansion will decrease, resulting in larger axial clearances. The steam flow and the temperature to the turbine can then again be changed.

This instrument measures differential expansion at two points: one at the governor pedestal, and one by the turning gear generator end). It has alarms for rotor long and rotor short measured at either location.

4. Turbo-Graf Rotor Eccentricity Recorder with Phase Angle Indication

Rotor eccentricity is monitored continuously from turning gear speed to approximately 600 rpm. When the unit attains a speed of approximately 600 rpm the recorder is automatically switched from eccentricity to vibration. Bowing of the rotor will appear as vibration above that speed. The recorder is equipped with an alarm which will sound when the eccentricity limit is reached.

An eccentricity phase angle indicator is provided which displays the angular relationship between the eccentricity "High Spot" and a reference point namely the No. 1 balance-hole. The eccentricity pickup is located in the governor pedestal.

5. Turbo Graf Vibration Recorder with Phase Angle Indication

The vibration instrument is used to measure and record vibration of a turbine rotor at speeds above 600 rpm: below this speed rotor runouts are recorded as eccentricity (see paragraph 4 above). The vibrations are measured on the rotor near the main bearings. Excessive vibrations serve as a warning of abnormal and possible hazardous conditions in the turbine. The vibration recorder is equipped with an alarm, which will sound when excessive vibrations are measured at any one of the bearings.

A phase angle indicator is provided which displays the angular relationship between the "High Spot" on a particular bearing

and the turbine rotor reference, namely the No. 1 balance-hole. A 9-position selector switch located on the front face of the vibration power drawer controls the selection of the phase angle of a particular bearing.

6. Turbo-Graf Speed and Valve Position Recorder

During a startup or following an instantaneous loss of load, it is desirable to have a record of rotor speed. However, when the generator is on the line, the speed is constant and need not be recorded. At synchronous speed a record of governor valve position is useful, since the valve opening varies with the load on the unit.

The selection of either valve position or speed input to the recorder is controlled by the position of the main generator breaker. A speed record is maintained with the breaker open, and a valve position record with the breaker closed.

J. Load Changes

A change in blade-path steam temperature will produce thermal stresses in the rotor which persist as long as there is a difference between the surface and interior temperatures of the rotor body. Such a difference exists during and immediately following a rapid change in the surface temperature because of the time required for heat to flow from the surface into the interior. The stress is proportional to the temperature difference and is greatest at the rotor surface. It is called a transient stress because it ceases to exist when the surface and interior temperatures have equalized.

Charts have been drawn up which provide guidelines to minimize rotor stress due to load changes. See Fig. 21 and 22. From Fig. 21, we can estimate the first stage temperture change between two power levels. Then we can use that ΔT, and the 10,000 cycle fatigue capacity line, to get a time period. This time period we can then use to set our load rate of change (%/min).

An internal temperature change of 80 F or less can be made instantaneously without exceeding the stress corresponding to the selected 10,000 cycles of fatigue capacity.

The following tabulation lists load changes which can be made instantaneously without exceeding the selected 10,000 cycles of fatigue capacity:

0-10 percent

10-30

20-53

30-78

40-85

50-100

Figure 23 is used to determine startup times corresponding to different first stage metal temperature.

IV. OTHER SYSTEMS ASSOCIATED WITH MAIN TURBINE

1. Main Steam

Supplies steam to the steam chests, and to the second stage reheaters.

2. Turbine Lube Oil

Lubricate the bearings.

3. Turbine Electro Hydraulic Control (EHC) System

   Controls the turbine steam valves.

4. Gland Steam

   Seals the turbine shaft from steam leakage out; or air leakage in.

5. Condenser Air Extraction

   Increases turbine efficiency.

APPENDIX A SYSTEM FACT SHEET

1. Two steam chests on either side of the HP turbine, each with two Throttle Valves (TV) (Stop Valves), and two Governor Valves (GV) (Control Valves).

2. Transfer from Throttle Valve Control to Governor Valve Control at 1700 rpm

3. Steam flows from the center of the HP turbine, in both directions, and out 2 outlet pipes at each end.

4. Four Moisture Separator Reheaters (MSR's) separate moisture from HP turbine exhaust, and have two stages of reheat, 3rd stage extraction, and main steam.

5. Each of the four steam lines from the MSR's has a Reheat Stop Valve, and Intercept valve to isolate the LP turbines if the turbine trip. They have no control function.

6. The HP turbine has 8 stages. Extraction steam is taken out after the 3rd stage, and from the HP turbine exhaust which is the 8th stage.

7. The LP turbines have stages numbered 9 through 14. Extraction steam is taken out after the 10th, 11th, 13th and 14th (exhaust) stages.

8. The nine turbine generator journal bearings are numbered from the governor end to the generator end. There are two for the HP turbine rotor,

2 for each of the LP turbine rotors, 2 for the generator rotor, and one for the exciter.

9. Bearing lift oil is supplied to bearings 3 and 4.

10. The thrust bearing anchors the axial position of the rotor. It is located between bearings 4 and 5.

11. The turning gear rotates the rotor at 2.5 rpm to minimize rotor bow during shutdown.

12. The exhaust hood sprays are located at each end of the LP turbines. They are on between 600 rpm and 10% power, or if the exhaust temperature is $> 160^{o}F$.

13. Panel 16 start up Temperature Recorder monitors turbine metal and steam temperatures.

14. Casing expansion is measured at the front standard.

15. The rotor position instrument indicates wear or sever loading of the thrust bearing. The pickup is located at the thrust bearing.

16. The Differential Expansion Recorder measures the position of the rotor relative to the casing. It indicates if the heat up or cooldown rate is too rapid.

17. Eccentricity is measured at the front standard and recorded up to 600 rpm.

18. Above 600 rpm, the recorder shifts to vibration. Vibration is measured at each of the 9 bearings.

19. Both vibration and eccentricity read out a phase angle.

20 Speed and valve position recorder measures the turbine speed until the generator breakers close, and then switches to control valve position.

APPENDIX B INTERLOCKS

For turning gear operation, one zero speed pressure switch must actuate, you must have >180 psig bearing lift, oil pressure, >5 psig bearing lube oil pressure, and the gear teeth must be engaged.

(See List of Turbine Trips).

APPENDIX C IMPORTANT SYSTEM PARAMETERS

1. Any of the following conditions should automatically trip the turbine:

1.1 Generator main transformer overall differential protection relay

1.2 Generator differential & neutral overvoltage

1.3 Generator neutral ground overvoltage (low frequency)

1.4 Generator neutral ground overcurrent

1.5 Generator negative phase sequence

1.6 Main trans. 2A overcurrent differential

1.7 Main trans. 2B overcurrent differential

1.8 Main trans. 2A neutral overcurrent

1.9 Main trans. 2B neutral overcurrent

1.10 Main trans. 2A sudden pressure rise

1.11 Main trans. 2B sudden pressure rise

1.12 Phase comparison (Transmission line fault)

1.13 Inoperable generator breaker

1.14 EHC DC Bus trip

1.15 Reactor trip

1.16 Both feed pumps tripped

1.17 Overspeed 1EOPS (1998 rpm)

1.18 Overspeed EHC (1998 rpm)

1.19 Auto stop solenoid limit switch tripped

1.20 Manual push button

1.21 Vacuum low (8-12" Hg abs)

1.22 Thrust bearing gross wear or failure

1.23 Low bearing oil pressure (5-7 psig)

1.24 Loss of 2 of the 3 speed imput signals to the 1EOPS.

2. If any of the following conditions exist the turbine should manually be tripped:

2.1 Exhaust hood temperature above 230F as recorded on Controlled Start Temperature Recorder, pts. 13, 15-17.

2.2 Differential of 50F between exhaust hoods as recorded on Controlled Start Temperature Recorder, pts. 13, 15-17.

2.3 Differential of 2.5" Hg between condensers as recorded on MS-UR-19

2.4 Journal or thrust bearing metal temperature of 225F as recorded on YM-TR-1925 pts 1-11.

2.5 Vibration of 14.0 mils as recorded on Rotor Eccentricity & Vibration Recorder, pts. 1-9. Normal 4 mils

2.6 A reading of 275 or 1435 mils for pt. 20 (Generator End) Differential Expansion Recorder. Normal is 1,000.

2.7 A reading of 193 or 645 mils for pt. 19 (Governor end) Differential Expansion Recorder. Normal is 500.

2.8 A reading of 20 or 100 mils on Turbine Rotor Position Recorder; normal is 60 mils.

3. Vacuum should be maintained on turbine trip or normal shutdown, unless trip was because of: loss of lube oil, thrust bearing trip, water in turbine, or loss of cooling water to LO coolers.

4. A minimum of 70°F oil discharge temp. from the bearings is necessary before turning gear operation.

5. Critical Speeds:

High Pressure Rotor	1955 rpm
Low Pressure Rotors	1652 rpm
Generator Rotor	970 rpm

APPENDIX D REFERENCES

1. Westinghouse Instruction Manual, Vol. 1 and 2, Spec. 1.00

APPENDIX E FIGURES

Figure 1	Steam Chest
Figure 2	Steam Chest - Nozzle/Block Valve Arrangement
Figure 3	Throttle Valve
Figure 4	Control Valve
Figure 5	HP Turbine
Figure 6	Steam Inlet to HP Turbine
Figure 7	HP Turbine Nozzle Block
Figure 8	HP Turbine Nozzle Block
Figure 9	Moisture Separator Reheater
Figure 10	MSR System
Figure 11	MSR Controller
Figure 12	LP Turbine
Figure 13	Journal Bearing
Figure 14	Journal Bearing Cross Section
Figure 15	Bearing Lift Bearing
Figure 16	Thrust Bearing
Figure 17	Turning Gear
Figure 18	Turning Gear
Figure 19	Control Panel
Figure 20	Control Panel
Figure 21	Load Changing Diagrams
Figure 22	Load Changing Diagrams

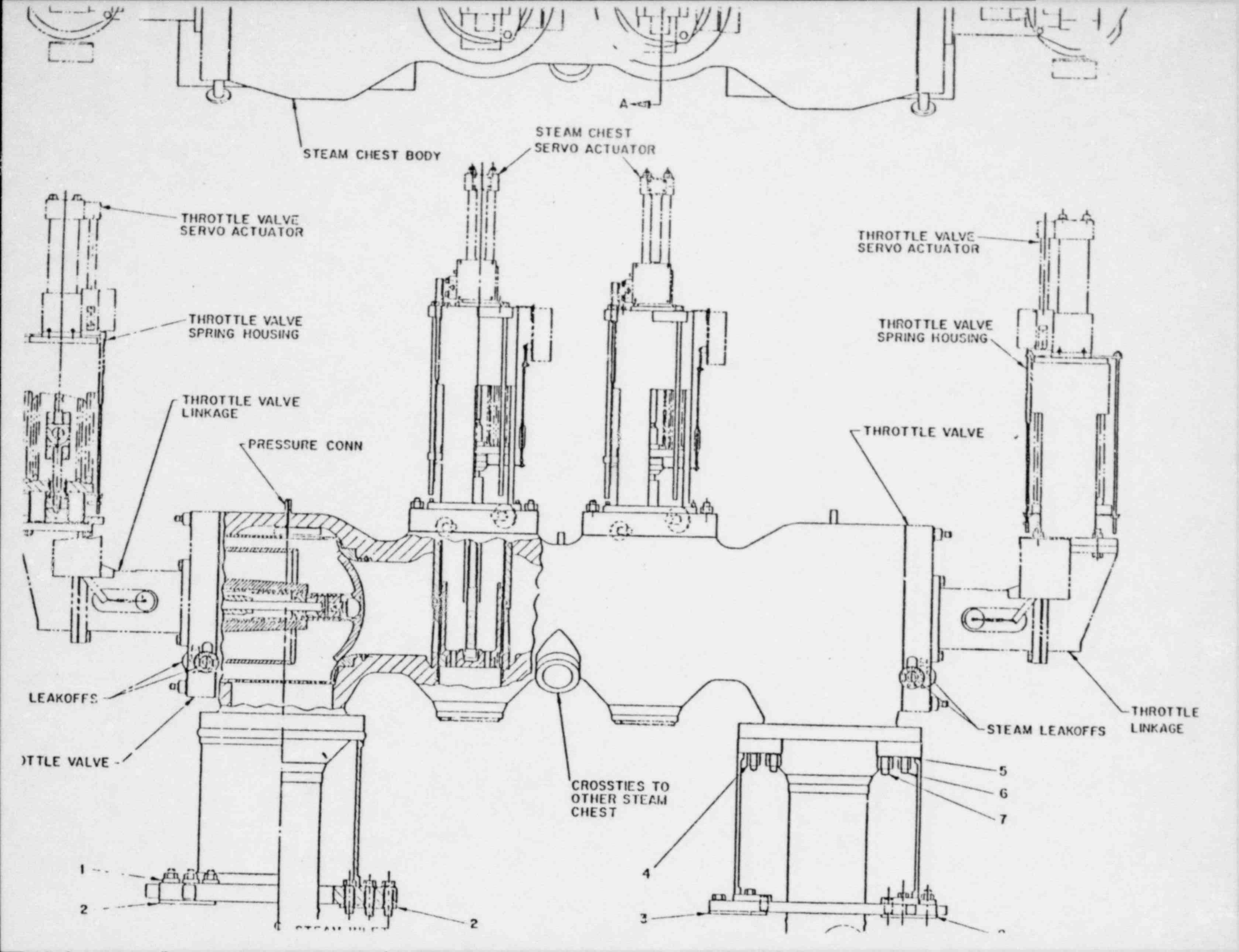
A
STEAM CHEST BODY
STEAM CHEST
SERVO ACTUATOR
THROTTLE VALVE
SERVO ACTUATOR
THROTTLE VALVE
SPRING HOUSING
THROTTLE VALVE
LINKAGE
PRESSURE CONN
LEAKOFFS
THROTTLE VALVE
THROTTLE VALVE
SERVO ACTUATOR
THROTTLE VALVE
SPRING HOUSING
THROTTLE VALVE
STEAM LEAKOFFS
THROTTLE
LINKAGE
CROSSTIES TO
OTHER STEAM
CHEST
1
2
2
3
4
5
6
7

Westinghouse Electric Corporation

STEAM DIVISIONS, LESTER, PA., U.S.A.

PAGE 1D

TITLE
INSTRUCTION TURBINE CONTROL SETTINGS

DWG. 822A598

DISTR.CODE 803 296 000

SUB NO. +2

STEAM CHEST - NOZZLE BLOCK - VALVE ARRANGEMENT
(VIEW TOWARD GENERATOR FROM GOVERNOR END)

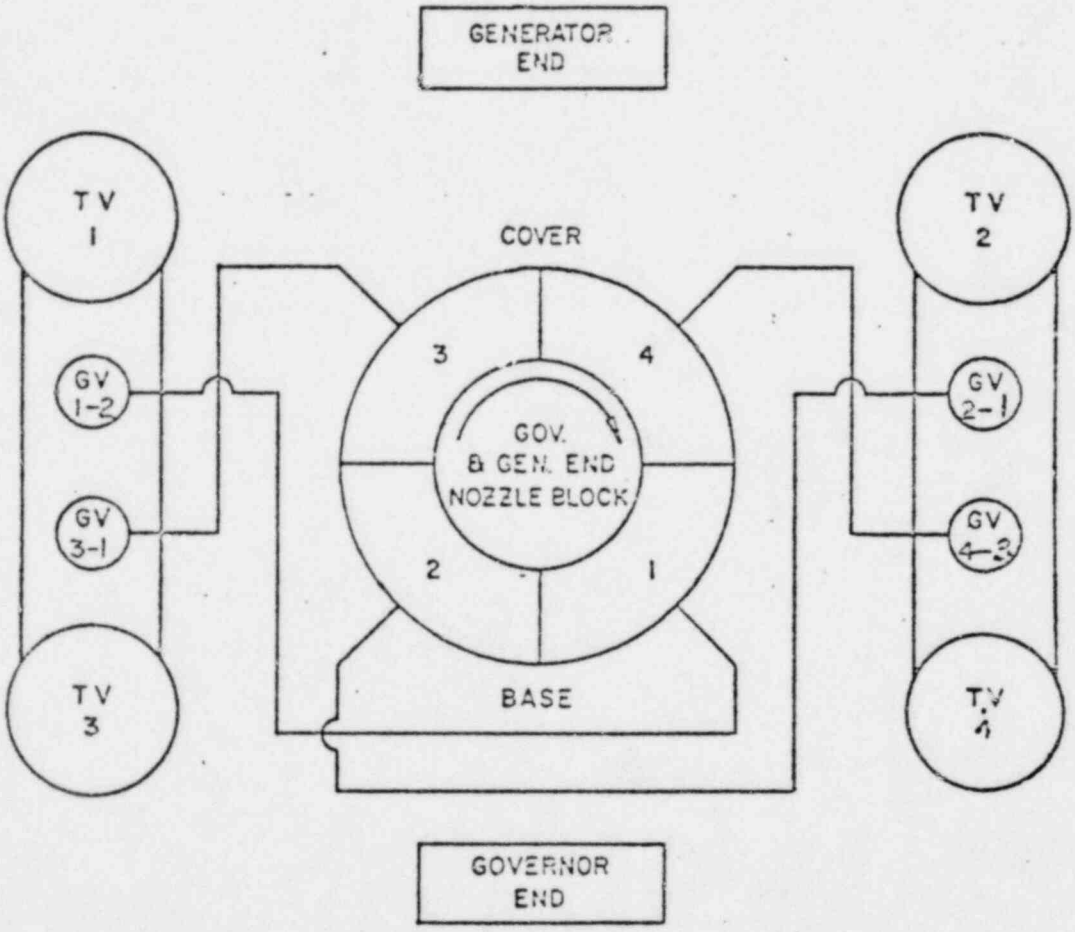

ODD VALVES ON LEFT
EVEN NUMBERS ON RIGHT.
NUMBERED FROM GENERATOR END to GOVENOR END.

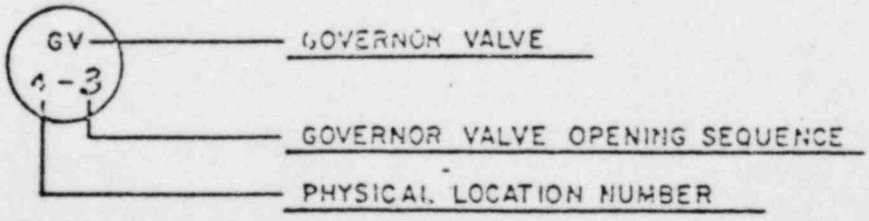

FIG. 7

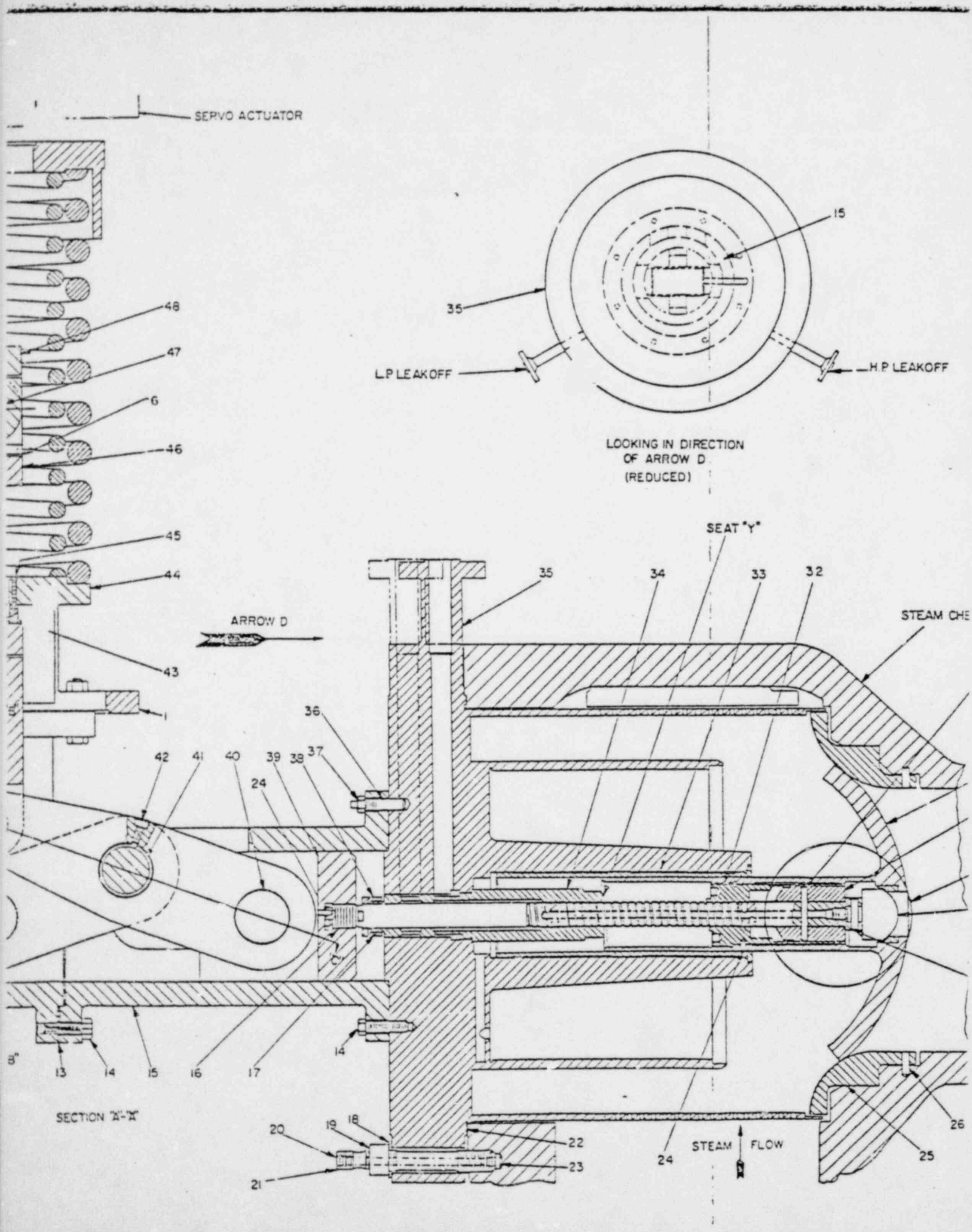
SERVO ACTUATOR
15
35
L.P LEAKOFF
H.P LEAKOFF
LOOKING IN DIRECTION
OF ARROW D
(REDUCED)
48
47
6
46
45
44
43
1
SEAT "Y"
35
34
33
32
STEAM CHE
ARROW D
36
42
41
40
39
38
37
24
14
13
14
15
16
17
SECTION "A"-"A"
20
19
18
22
23
21
24
STEAM
FLOW
25
26

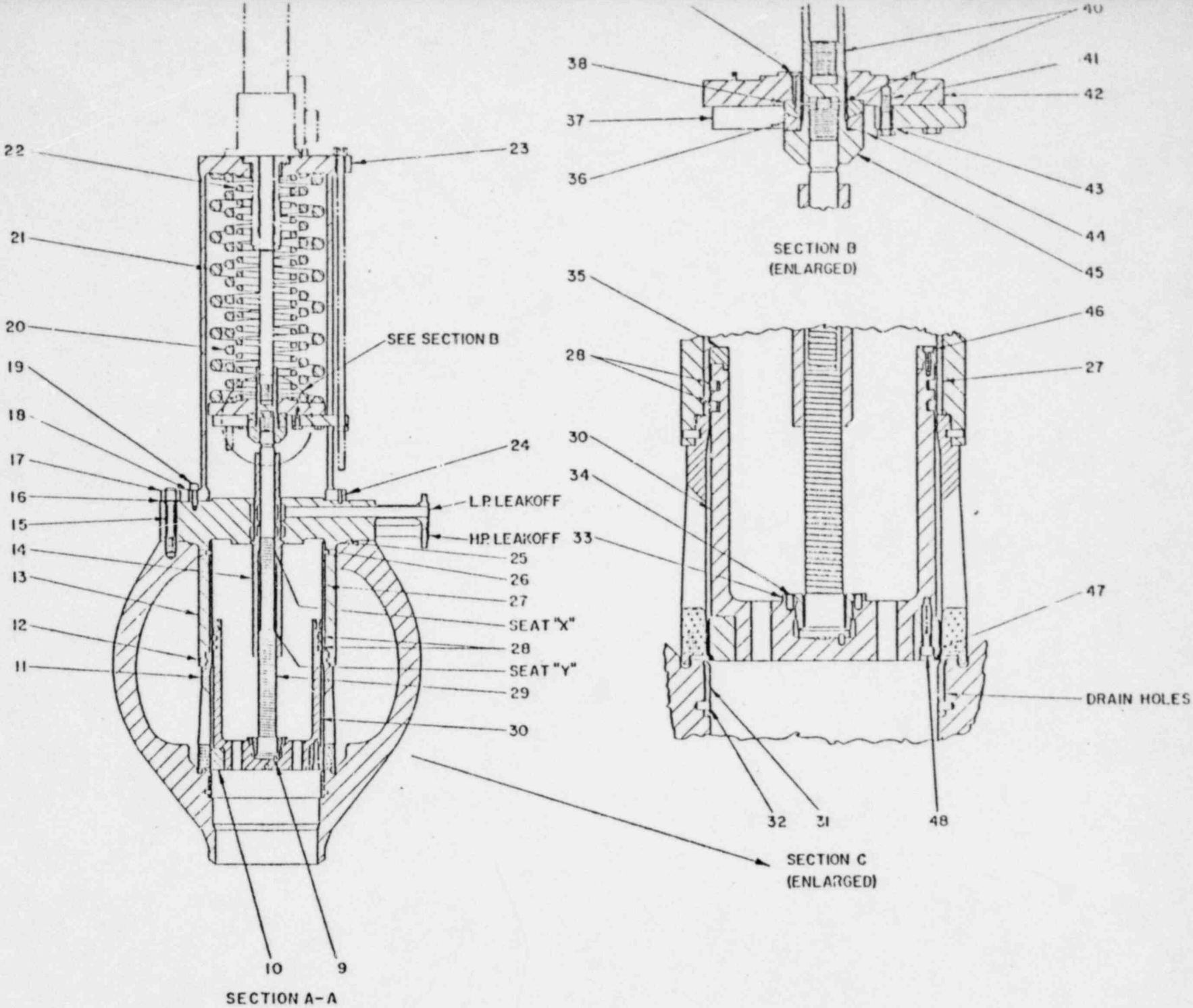

TTLE VALVE
GE

Figure-1

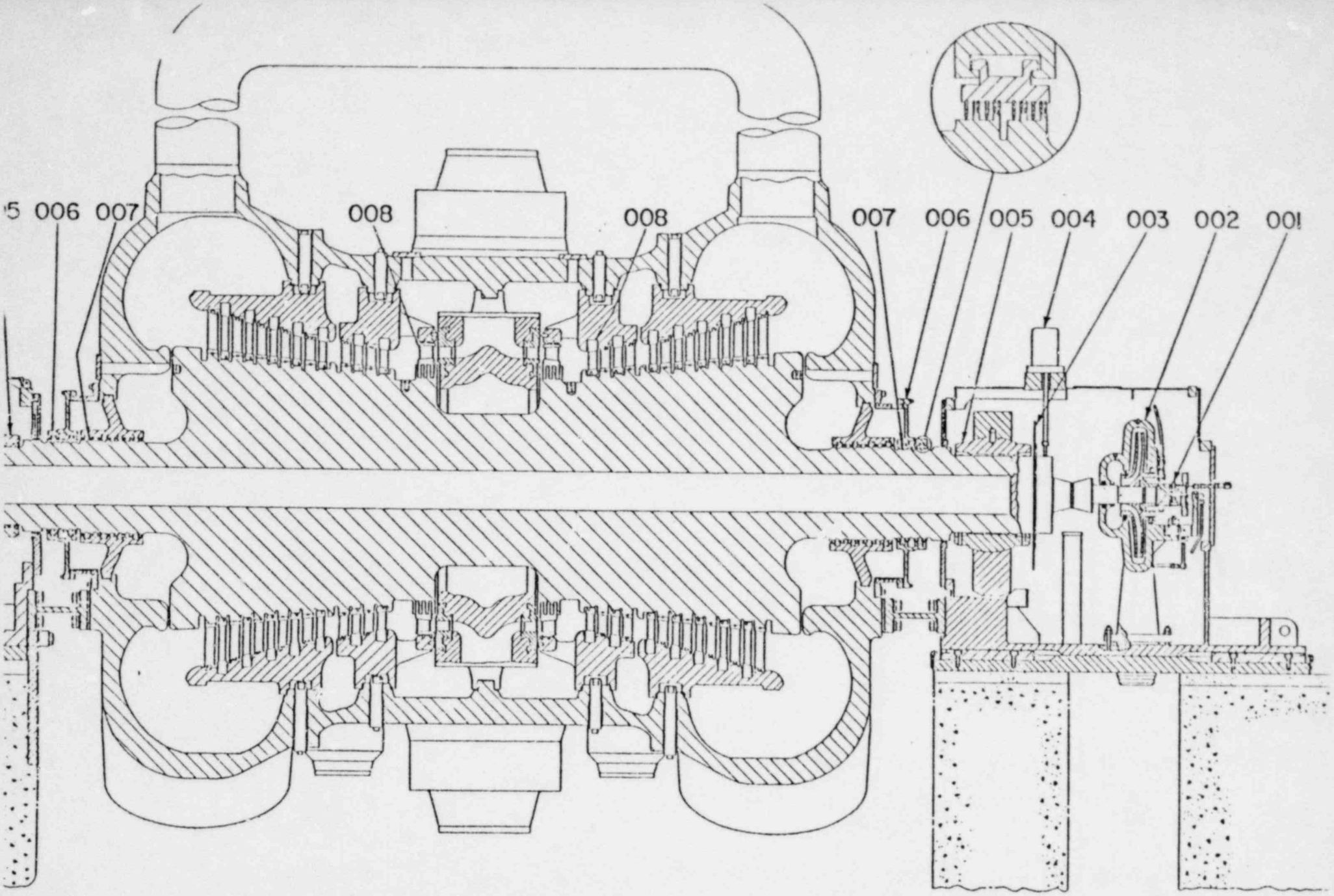
5
006
007
008
008
007
006
005
004
003
002
001

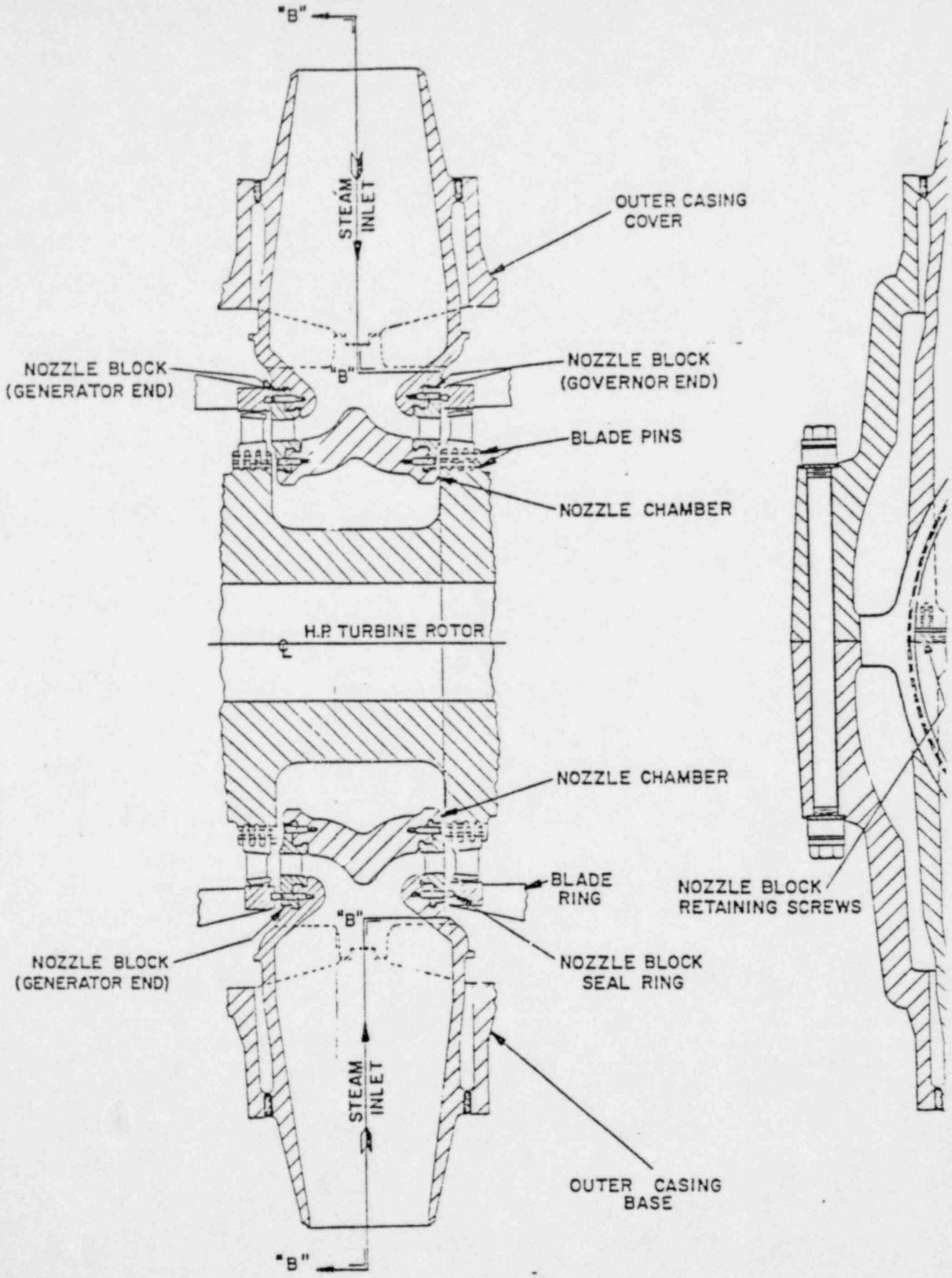

SECTION "A"-"A" "A"-"A"

FIG. 6
STEAM INLET TO

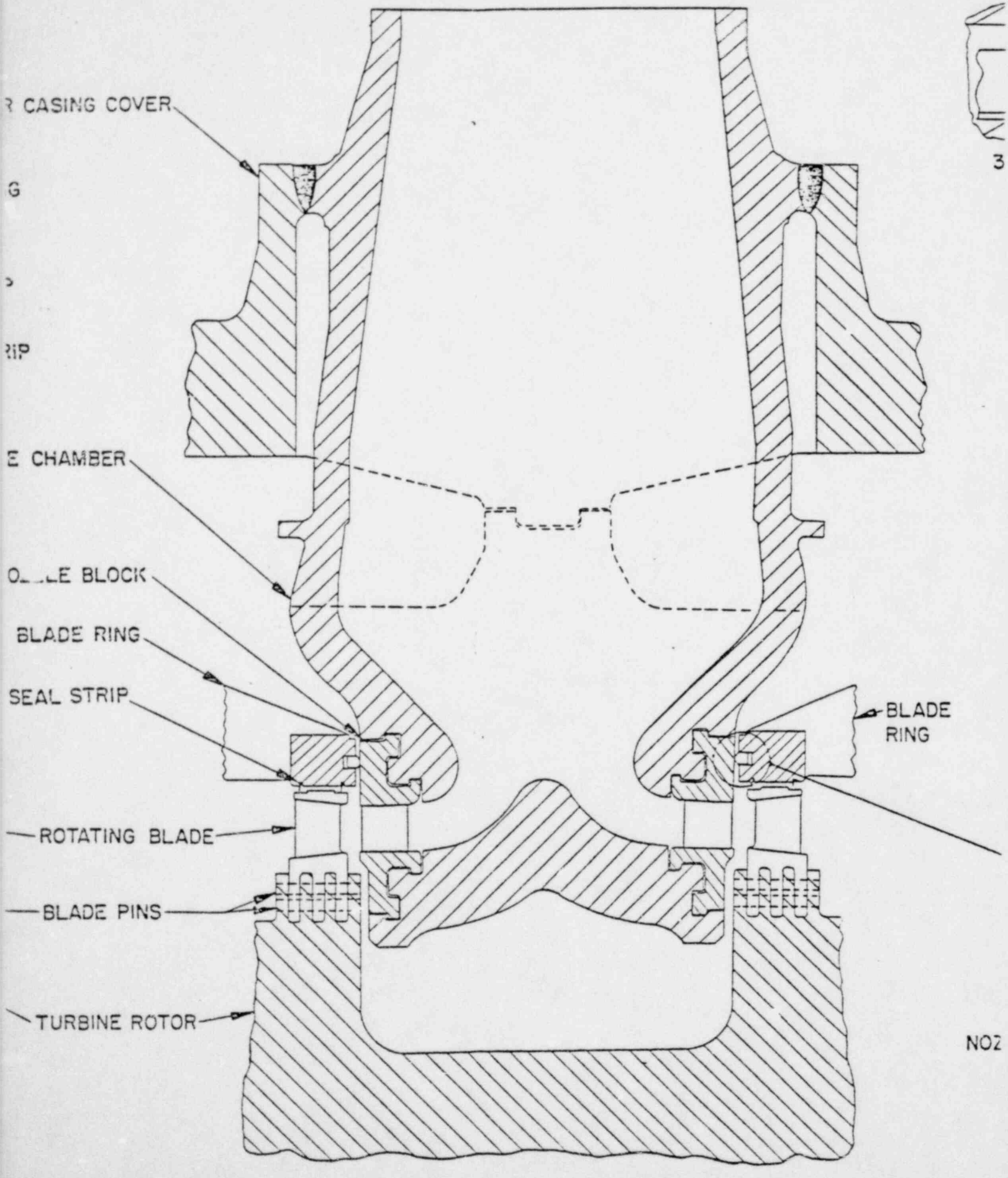
R CASING COVER
G
RIP
E CHAMBER
O LE BLOCK
BLADE RING
SEAL STRIP
BLADE RING
ROTATING BLADE
BLADE PINS
TURBINE ROTOR
3
NOZ

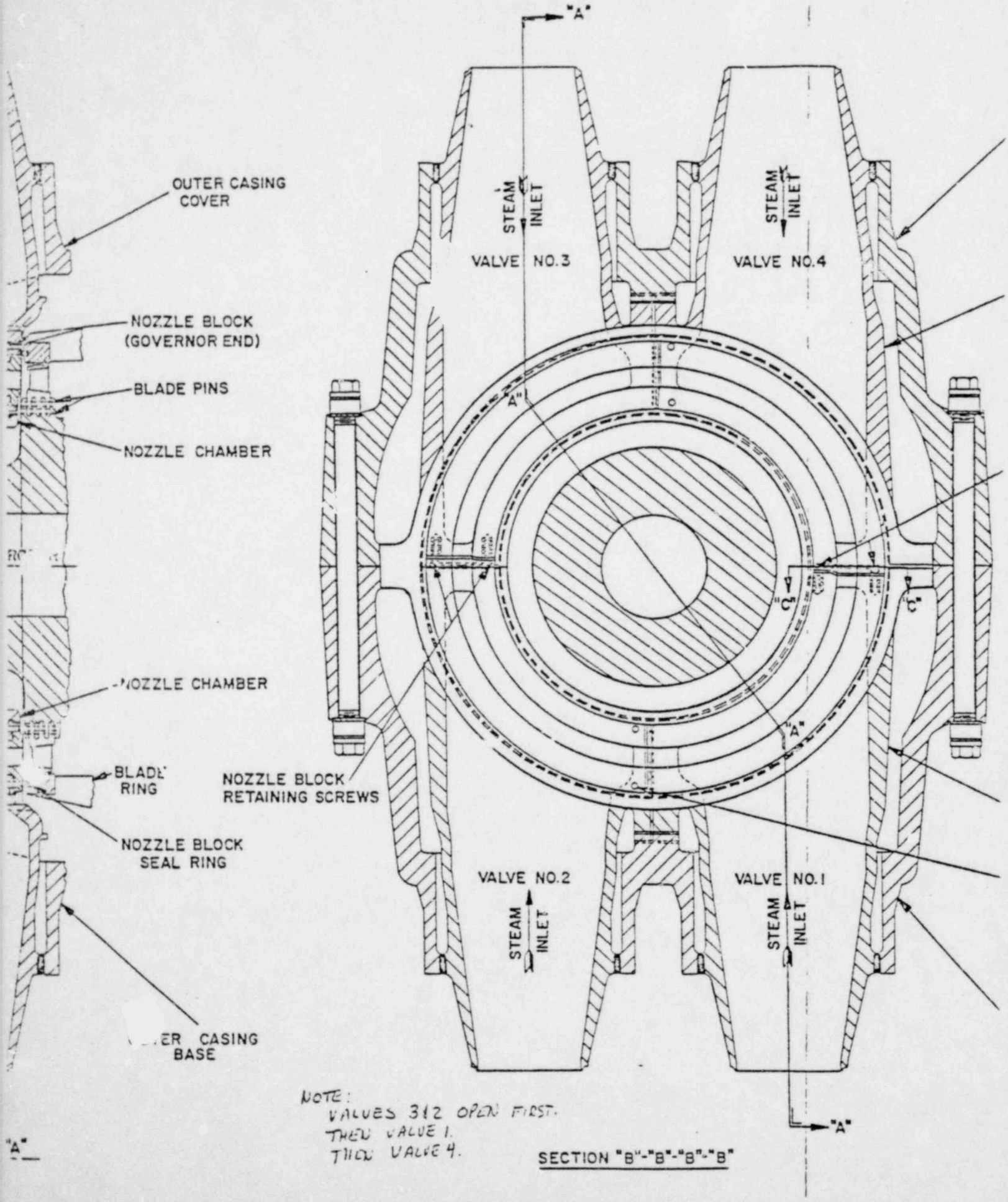

NOTE:
VALVES 3 & 2 OPEN FIRST.
THEN VALVE 1.
THEN VALVE 4.

SECTION "B"-"B"-"B"-"B"

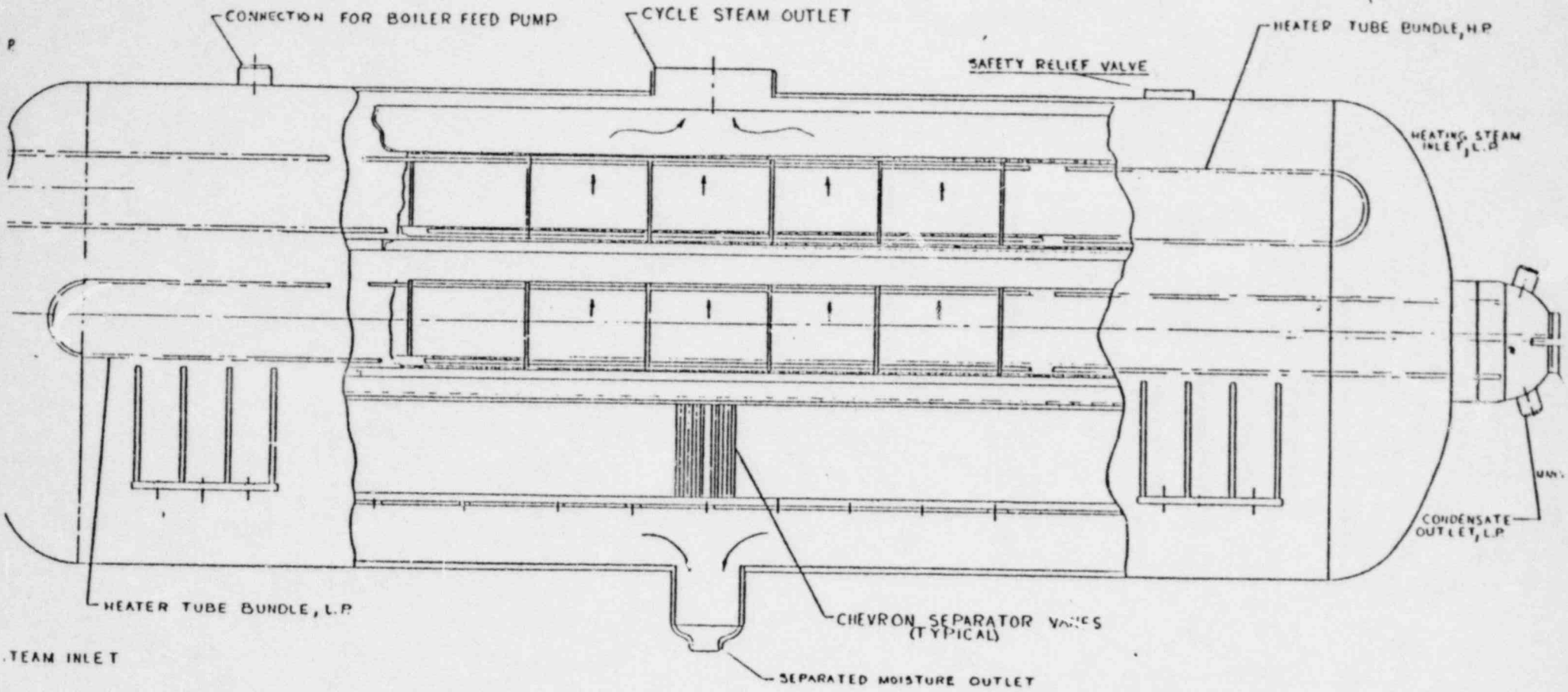

FIG. 9
MOISTURE SEPARATOR DET

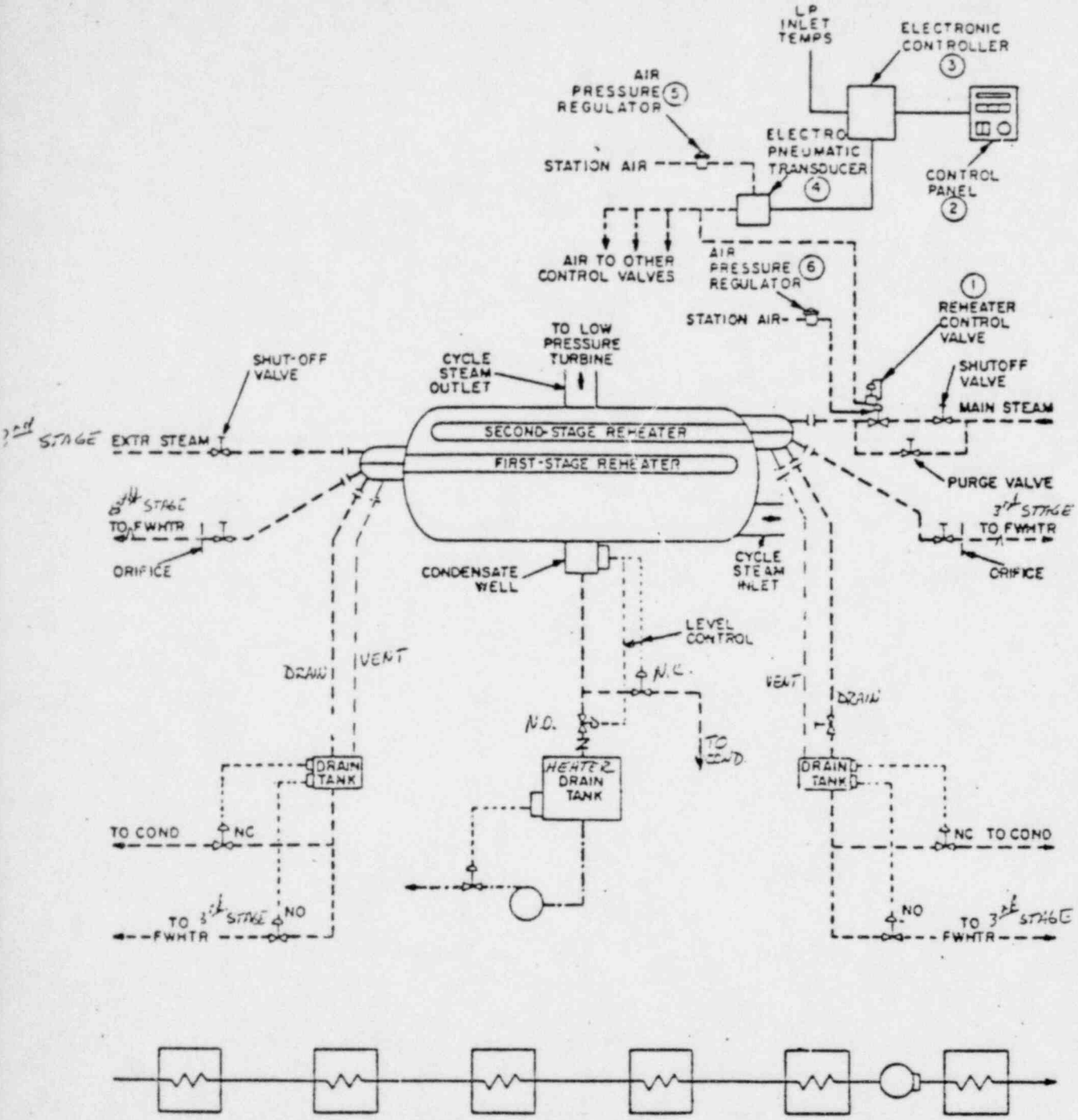

NOTES: (1) ALL PIPING, DRAIN TANKS, CONTROLS, VALVES, ETC. TO BE FURNISHED BY PURCHASER EXCEPT AS SPECIFIED BY CONTRACT.

(2) A TWO-STAGE REHEATER ARRANGEMENT IS SHOWN FOR SINGLE-STAGE REHEATER ARRANGEMENT, THE REHEATER SHOWN AS "FIRST-STAGE REHEATER" (AND IT'S ASSOCIATE PIPING ETC SYSTEMS) IS ELIMINATED AND THE "SECOND-STAGE REHEATER" BECOMES THE ONLY REHEATER.

LEGEND: —·—·— ALTERNATE SCHEME FOR DRAINING MOISTURE SEPARATOR-REHEATER CONDENSATE IF "CONDENSATE WELL LEVEL CONTROL" IS NOT EMPLOYED.

CONTROL VALVE } NO UNLESS INDICATED AS NC
MANUAL VALVE }

NO NORMALLY OPEN

NC NORMALLY CLOSED

MOISTURE SEPARATOR-REHEATER SYSTEM DIAGRAM

Figure 4

FIG 10
MSR SYSTEM

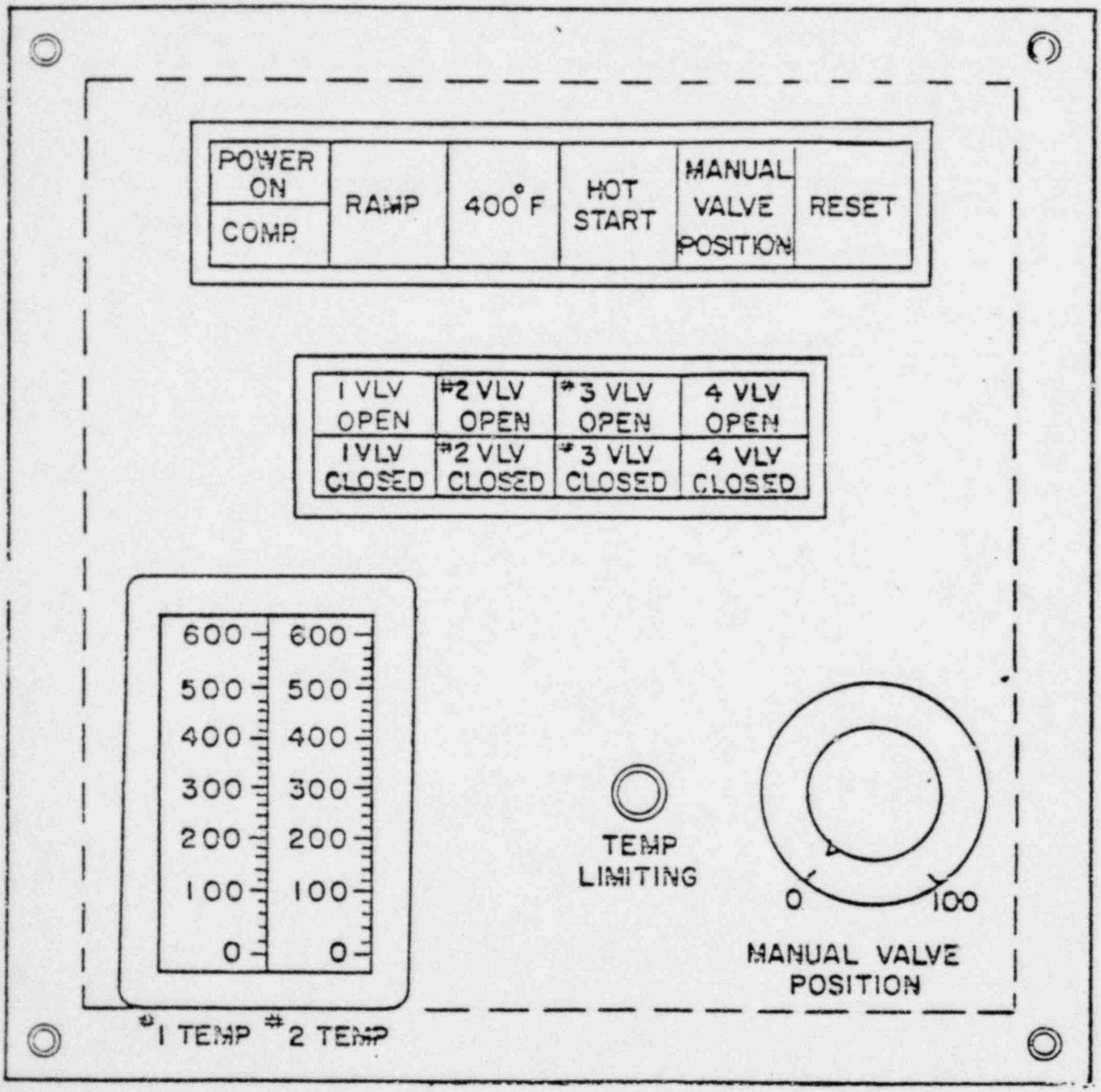

Figure 6

FIGURE 11
MSR CONTROLLER

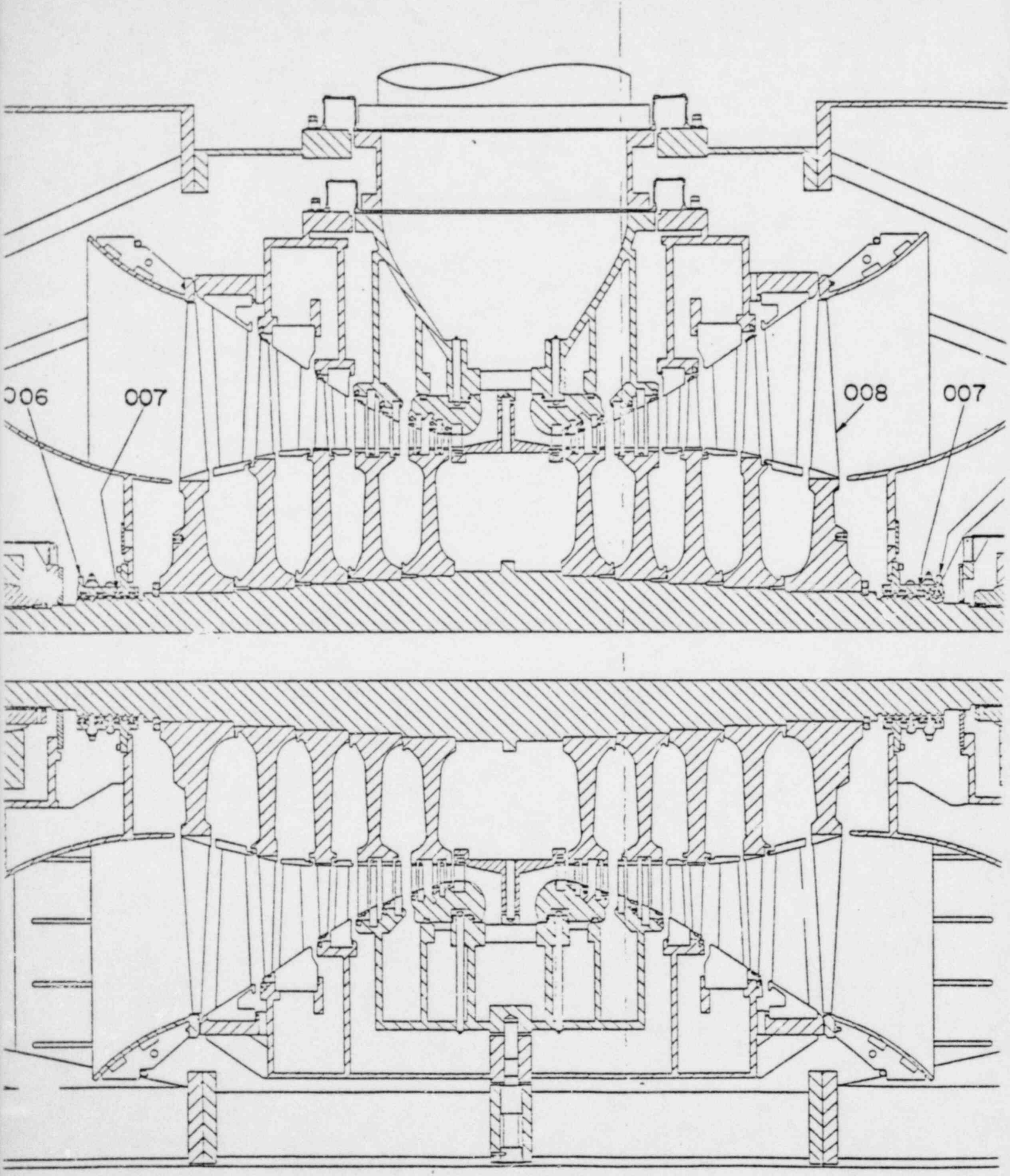

FIG. 12
L.P TURBINE

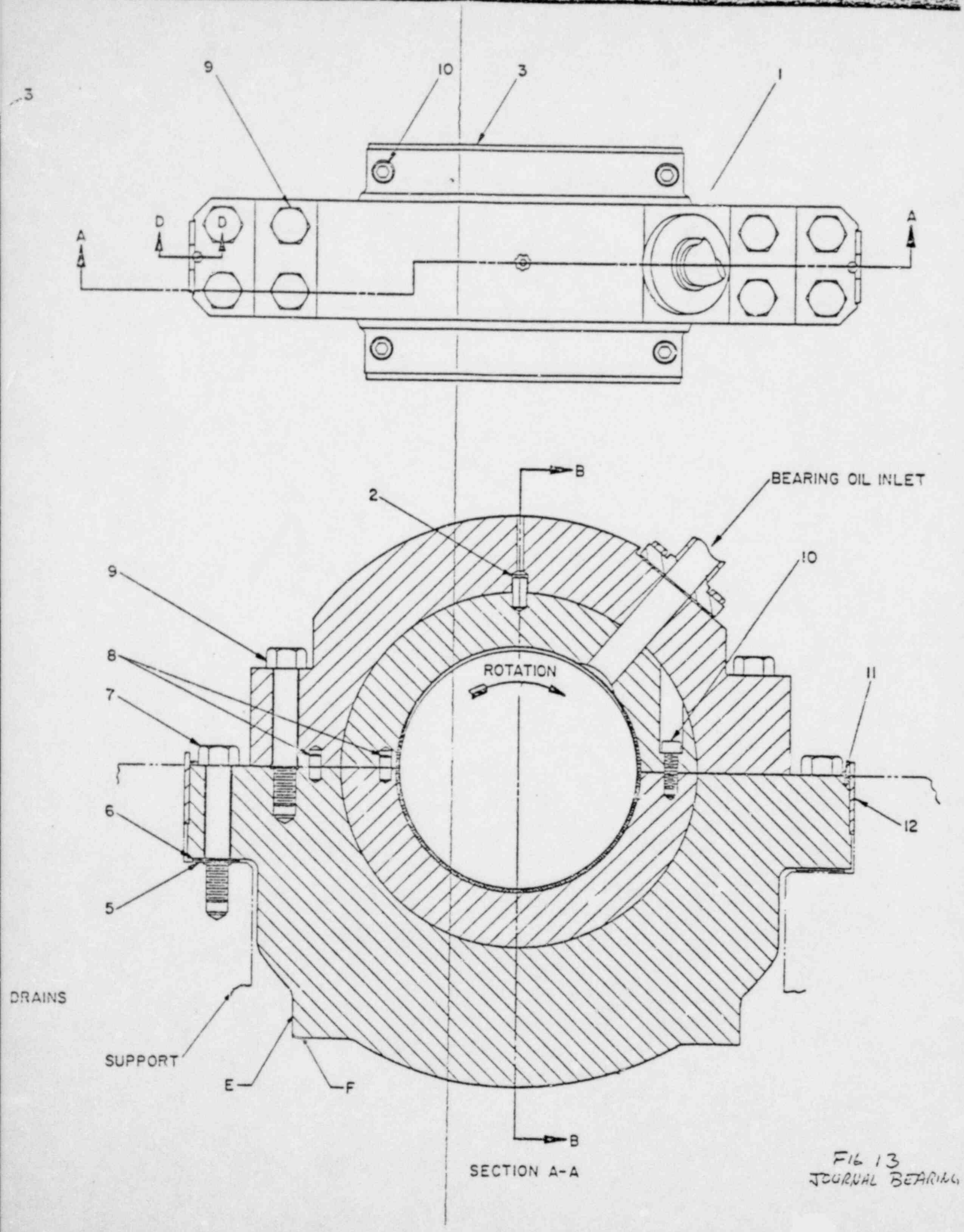

FIG 13
JOURNAL BEARING

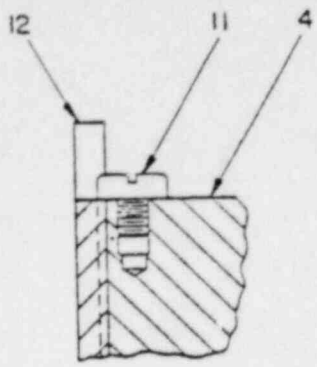

SECTION D-D
(ENLARGED)

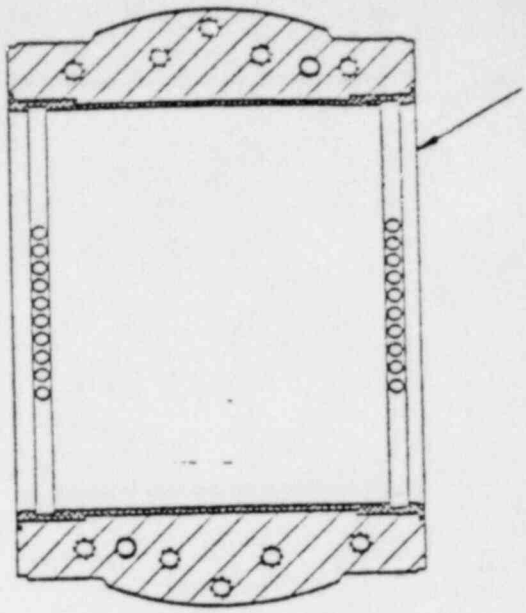

SECTION C-C

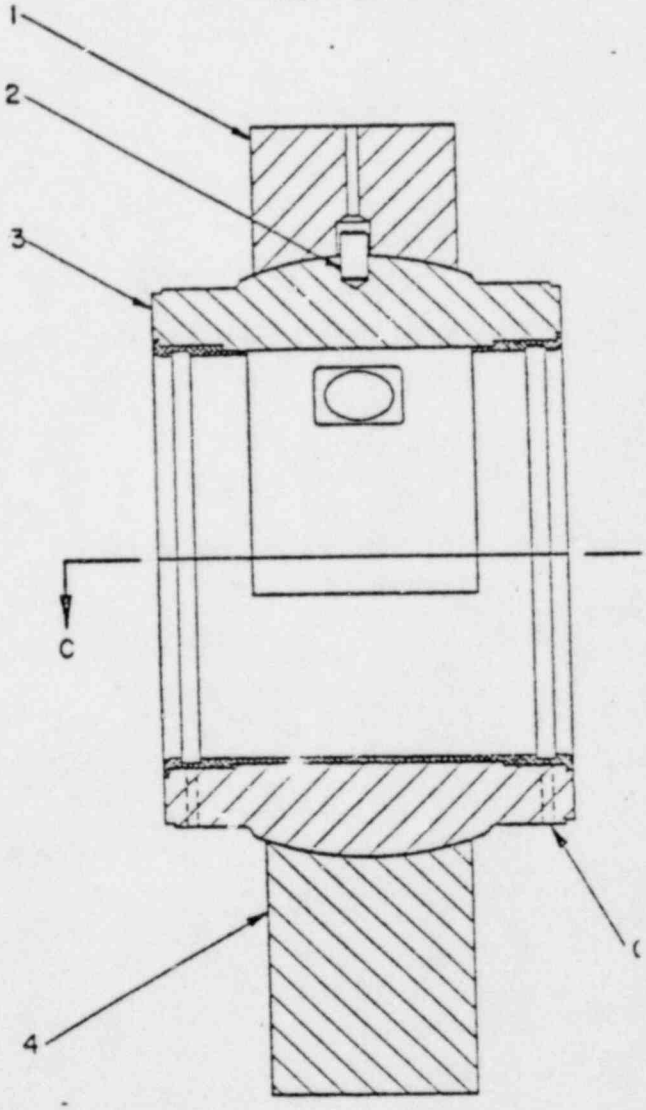

SECTION B-B

FIG 14
JOURNAL BEARING

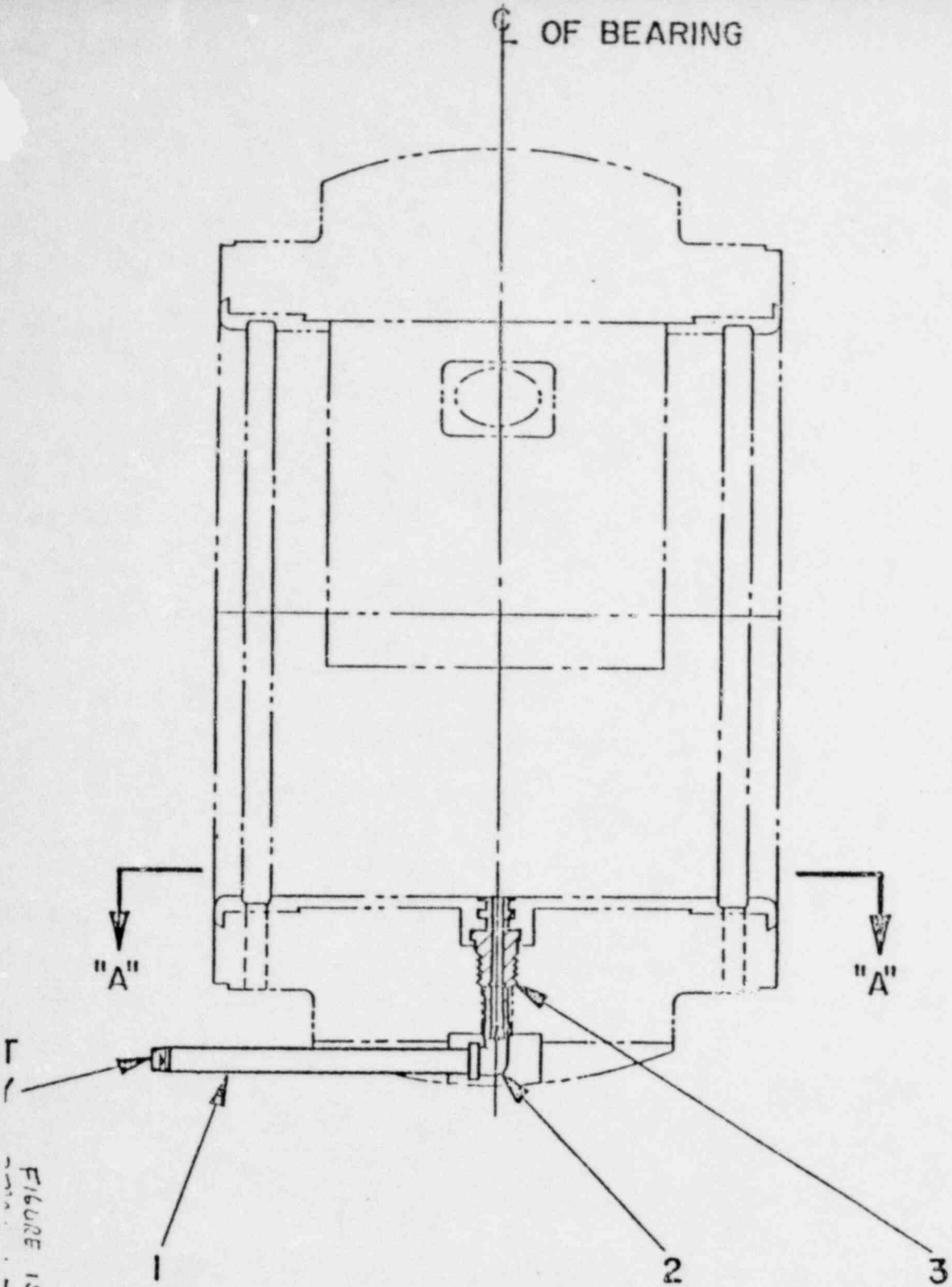

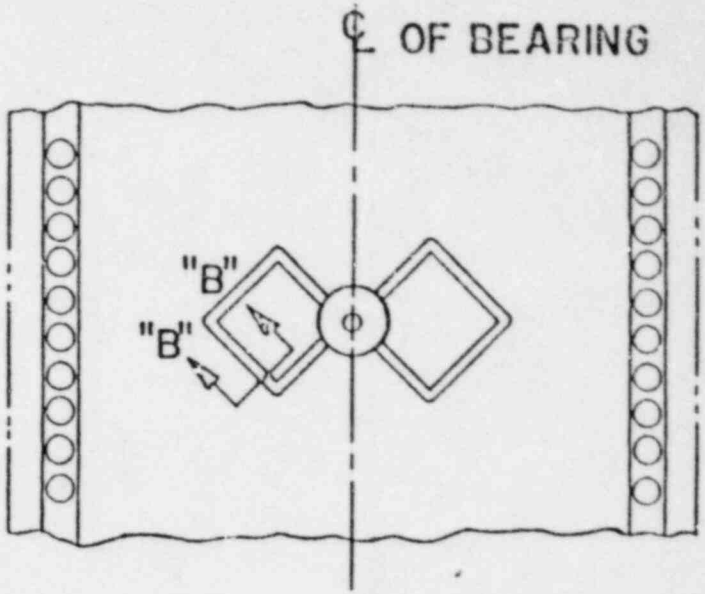

PARTIAL SECTION "A"–"A"

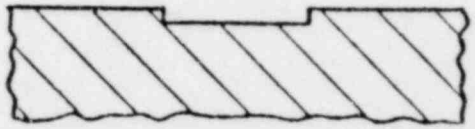

SECTION "B"–"B"
(ENLARGED)

FIGURE 15

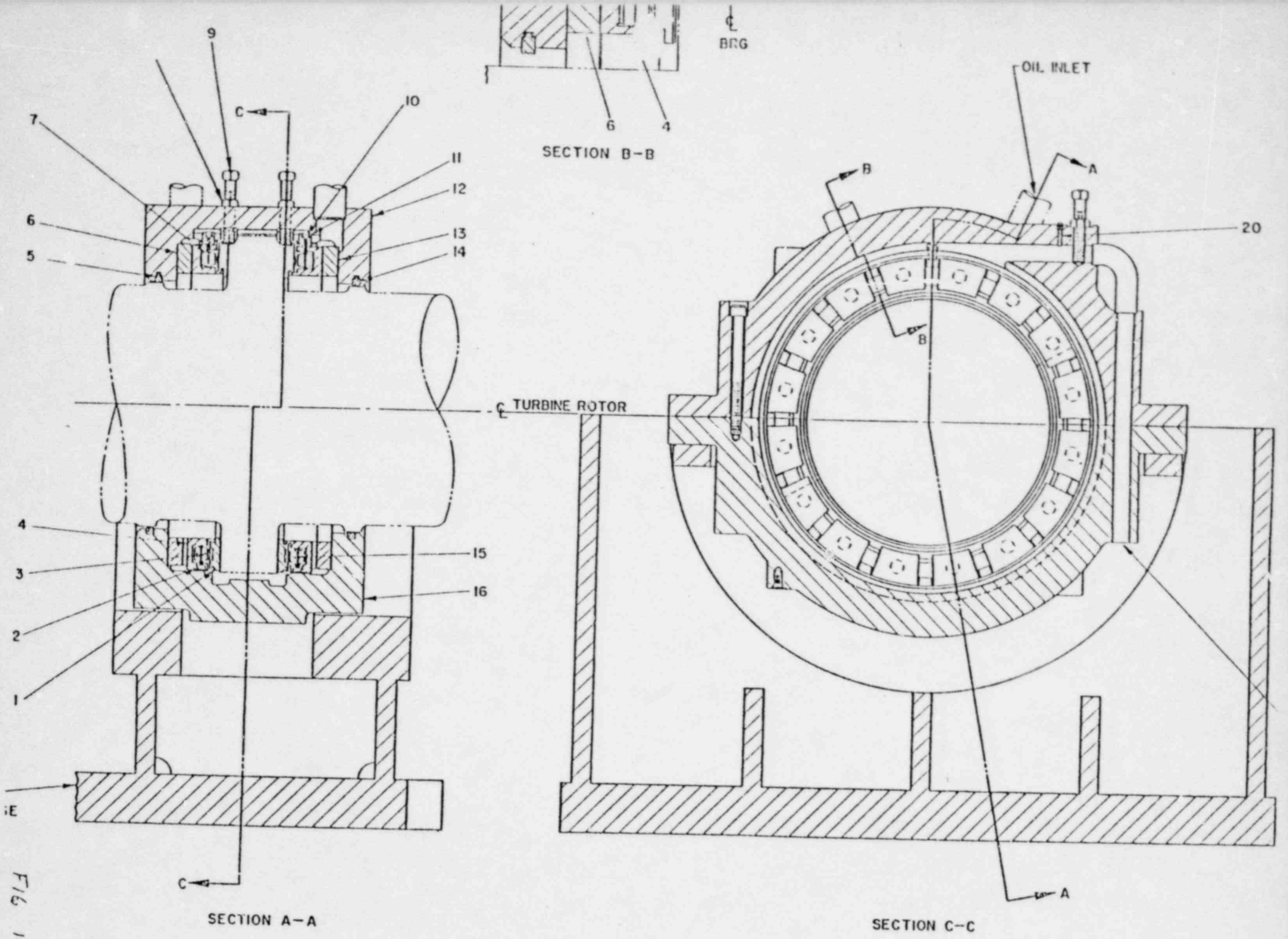
BRG
6
4
SECTION B-B
OIL INLET
A
B
20
B
TURBINE ROTOR
A
SECTION C-C
9
C
10
7
11
12
6
13
5
14
4
15
3
16
2
1
C
SECTION A-A

FIG 16

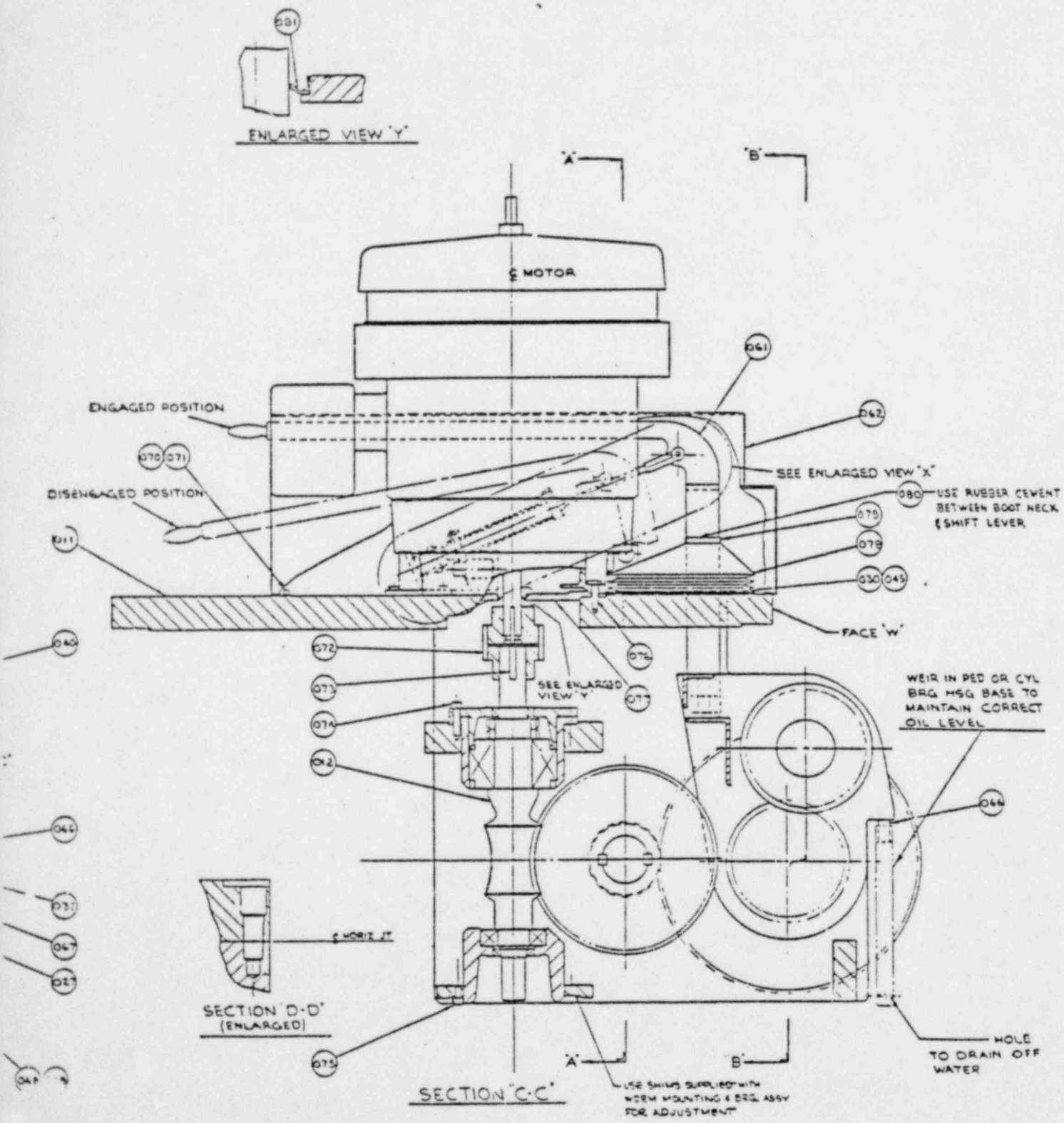
ENLARGED VIEW 'Y'
'A'
'B'
℄ MOTOR
061
062
ENGAGED POSITION
070 071
DISENGAGED POSITION
SEE ENLARGED VIEW 'X'
080
USE RUBBER CEMENT BETWEEN BOOT NECK & SHIFT LEVER
075
078
030 045
011
FACE 'W'
040
072
073
074
076
077
SEE ENLARGED VIEW 'Y'
WEIR IN PED OR CYL BRG HSG BASE TO MAINTAIN CORRECT OIL LEVEL
042
066
046
℄ HORIZ JT
SECTION 'D-D' (ENLARGED)
075
HOLE TO DRAIN OFF WATER
SECTION 'C-C'
USE SHIMS SUPPLIED WITH WORM MOUNTING & BRG ASSY FOR ADJUSTMENT

FIG 17

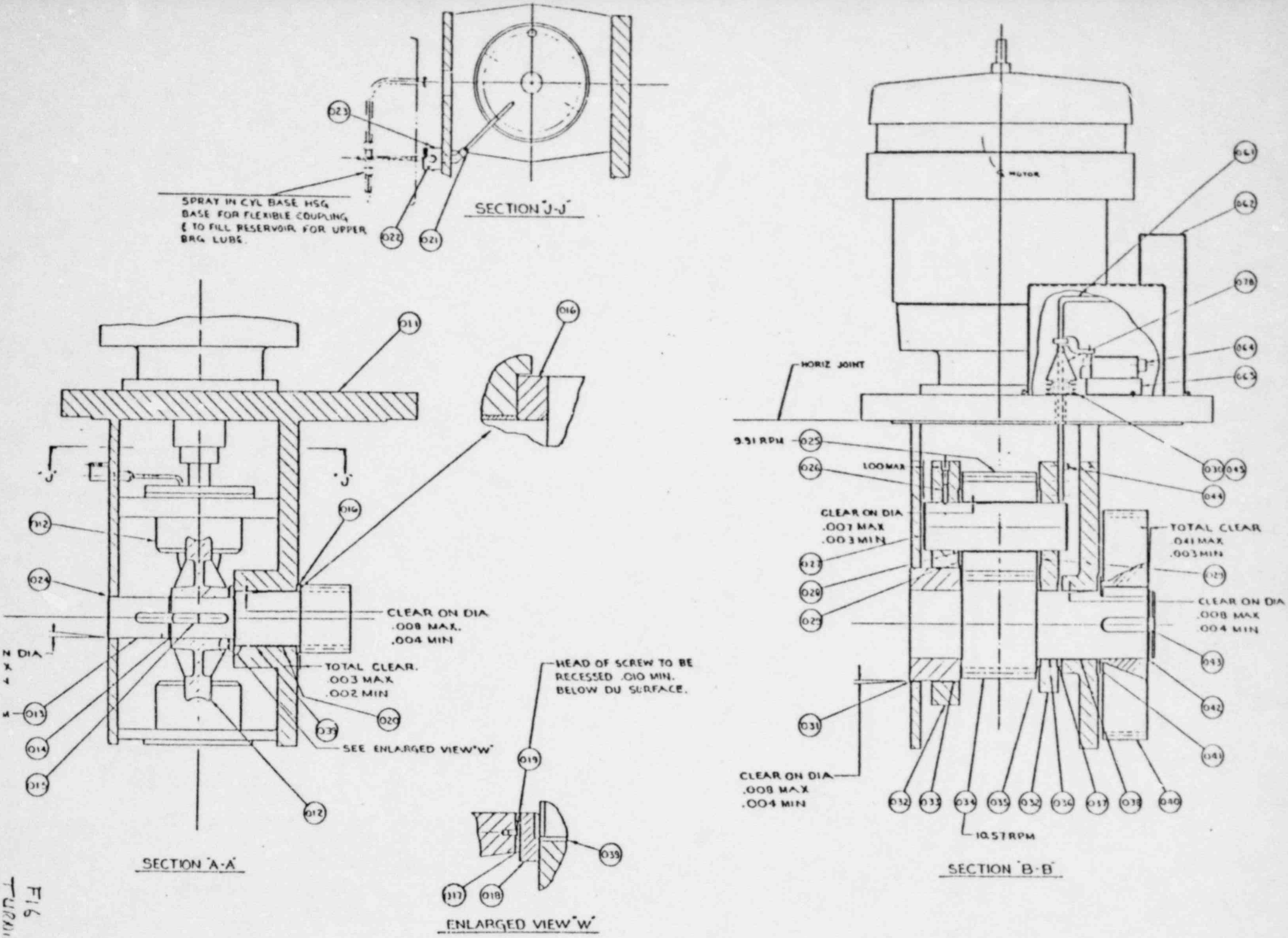

FIG 18
TURBINE 65

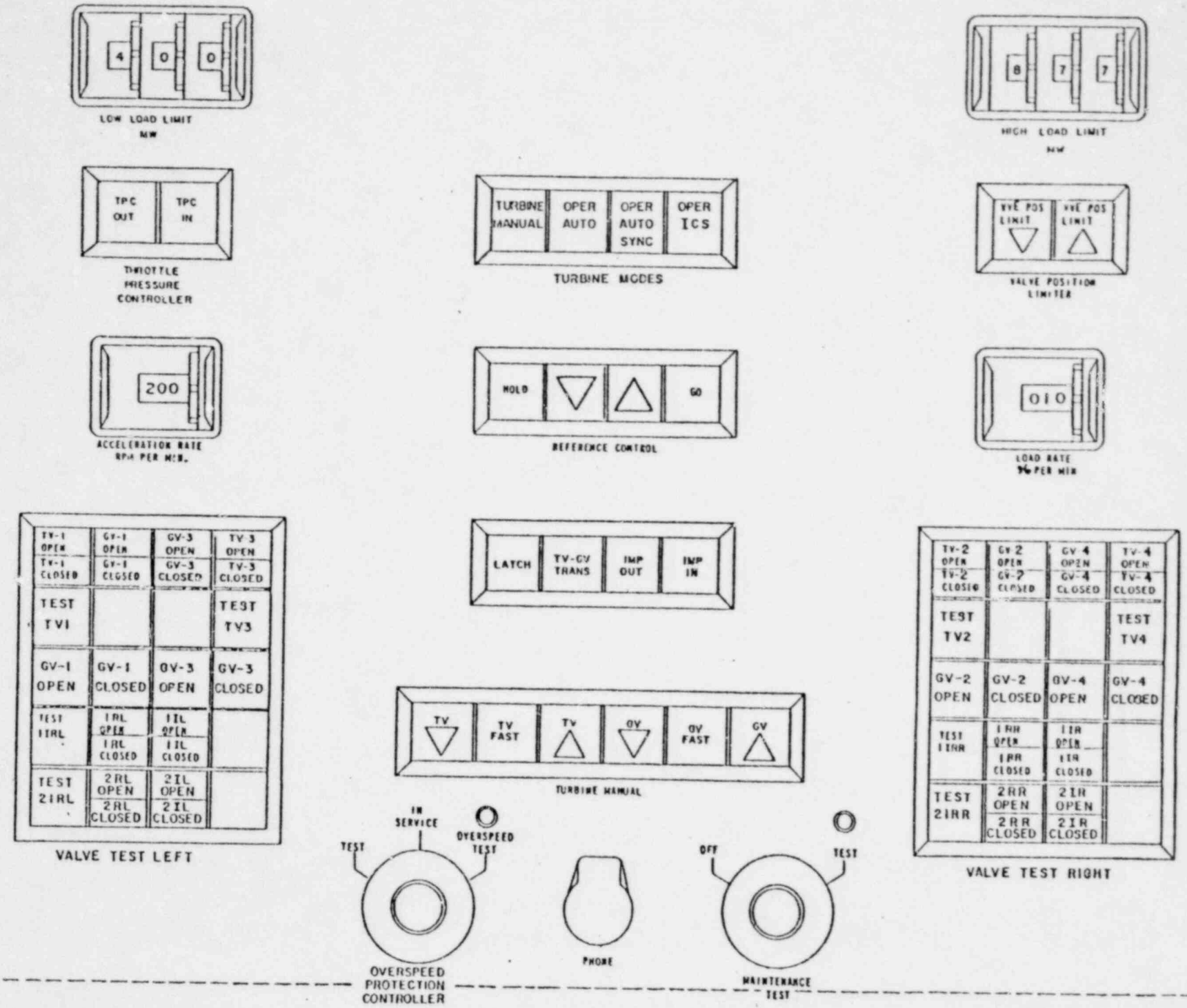
4 0 0
LOW LOAD LIMIT
MW
8 7 7
HIGH LOAD LIMIT
MW
TPC OUT
TPC IN
THROTTLE PRESSURE CONTROLLER
TURBINE MANUAL
OPER AUTO
OPER AUTO SYNC
OPER ICS
TURBINE MODES
VVE POS LIMIT
VVE POS LIMIT
VALVE POSITION LIMITER
200
ACCELERATION RATE
RPM PER MIN.
HOLD
GO
REFERENCE CONTROL
010
LOAD RATE
% PER MIN
LATCH
TV-GV TRANS
IMP OUT
IMP IN
TV-1 OPEN
GV-1 OPEN
GV-3 OPEN
TV-3 OPEN
TV-1 CLOSED
GV-1 CLOSED
GV-3 CLOSED
TV-3 CLOSED
TEST TV1
TEST TV3
GV-1 OPEN
GV-1 CLOSED
GV-3 OPEN
GV-3 CLOSED
TEST 1RL
1RL OPEN
1RL CLOSED
1IL OPEN
1IL CLOSED
TEST 2IRL
2RL OPEN
2RL CLOSED
2IL OPEN
2IL CLOSED
VALVE TEST LEFT
TV
TV FAST
TV
GV
GV FAST
GV
TURBINE MANUAL
TV-2 OPEN
GV-2 OPEN
GV-4 OPEN
TV-4 OPEN
TV-2 CLOSED
GV-2 CLOSED
GV-4 CLOSED
TV-4 CLOSED
TEST TV2
TEST TV4
GV-2 OPEN
GV-2 CLOSED
GV-4 OPEN
GV-4 CLOSED
TEST 1IRR
1RR OPEN
1RR CLOSED
1IR OPEN
1IR CLOSED
TEST 2IRR
2RR OPEN
2RR CLOSED
2IR OPEN
2IR CLOSED
VALVE TEST RIGHT
IN SERVICE
TEST
OVERSPEED TEST
OVERSPEED PROTECTION CONTROLLER
PHONE
OFF
TEST
MAINTENANCE TEST

Fig 20

LOAD-CHANGING RECOMMENDATIONS
NUCLEAR STEAM SYSTEM UNITS

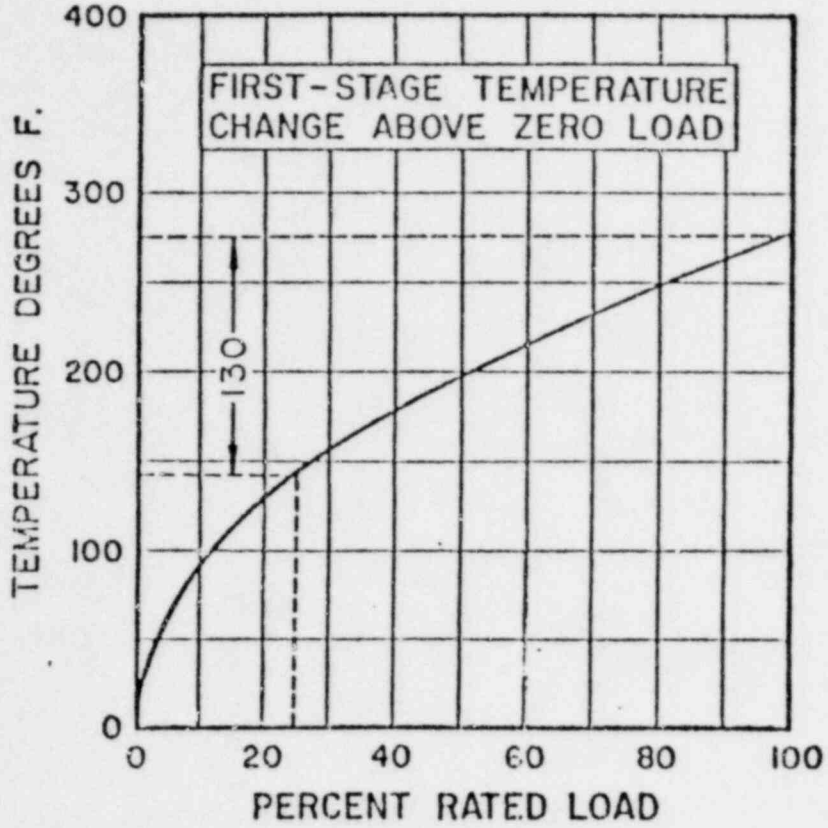

FIGURE 1

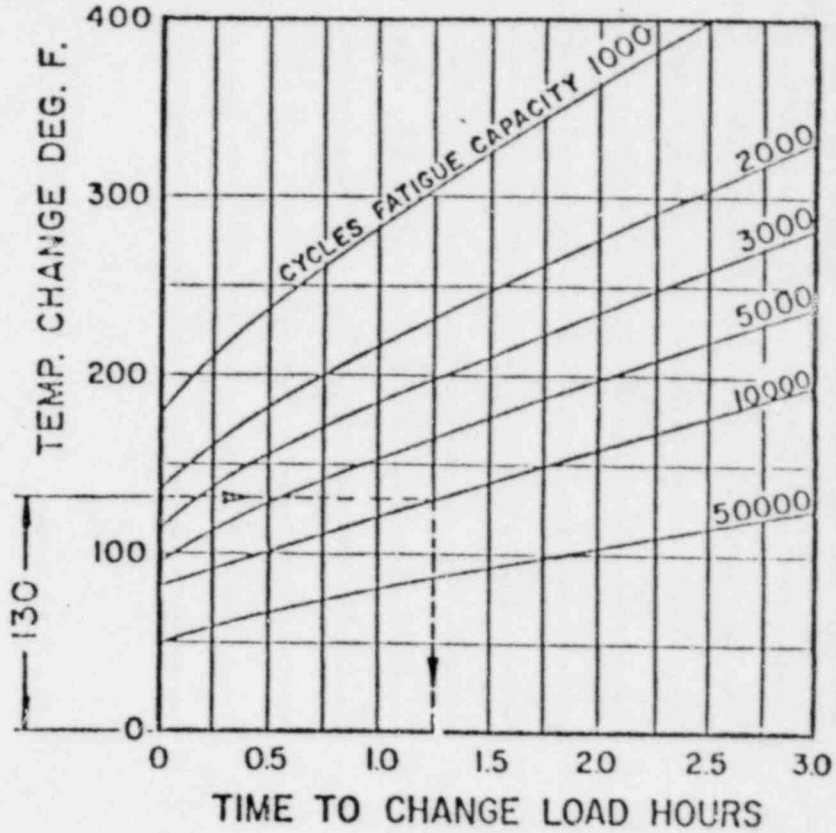

FIGURE 2

Figures 1 & 2

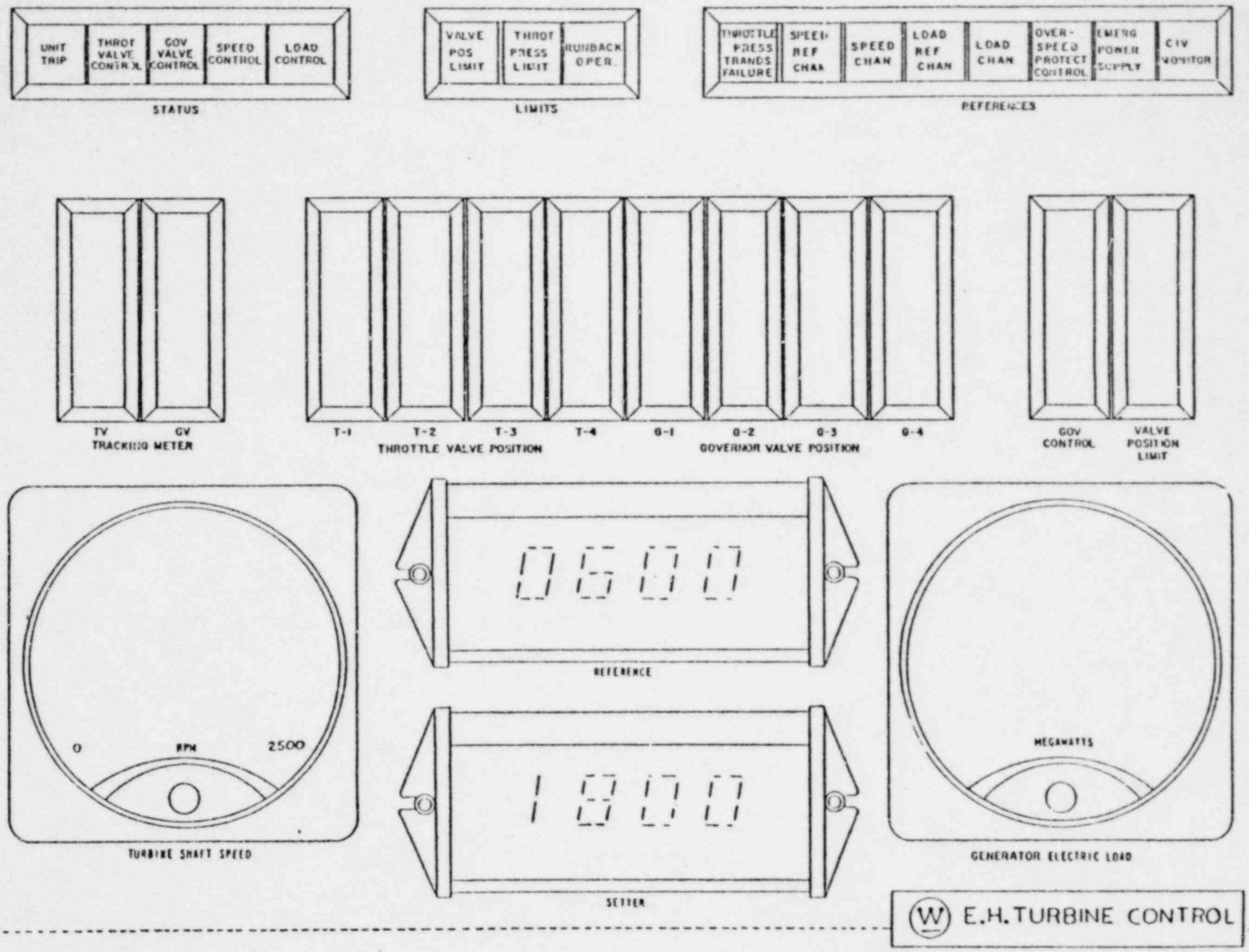

FIG 19
CONTROL PANEL

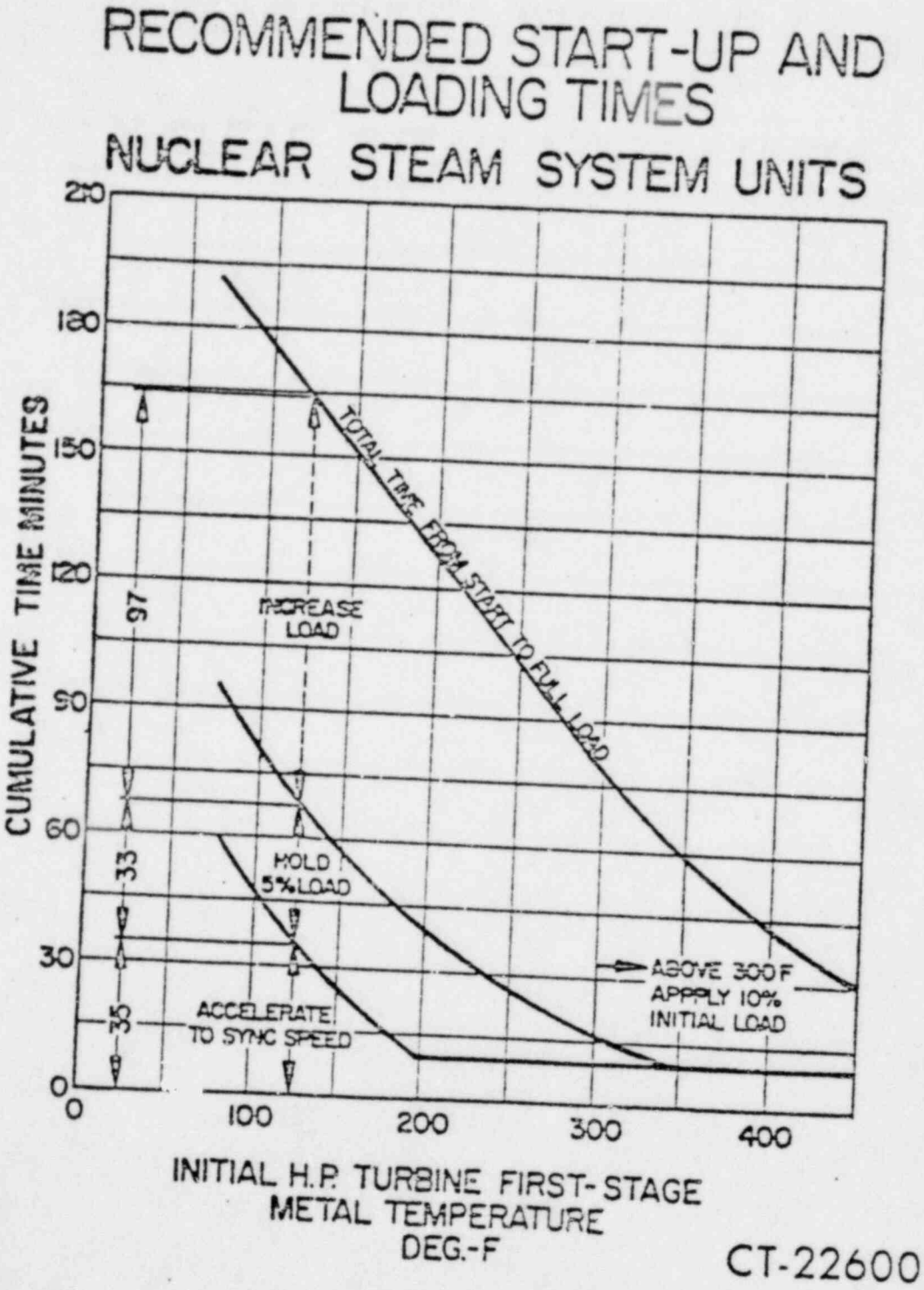

FIG 22
LOAD CHANGING

ENCLOSURE I

UNIT II CATEGORY IV CRO STUDY ASSIGNMENT SHEET

CYCLE 2-1

NAME _____ START DATE _____

COMPLETION DATE _____

1. Read System Description #17 - Makeup and Purification.
2. Trace the Makeup and Purification System.
3. Read OP 2104-1.2 - Makeup System.
4. Complete the Makeup and Purification Questionnaire.
5. Read System Description #20 - Decay Heat Removal.
6. Trace the Decay Heat System.
7. Read the following procedures:

   a. OP 2104-1.3 Decay Heat Removal.
   b. EP 2202-1.8 Loss of Decay Heat Removal.

8. Complete the Decay Heat Removal Questionnaire.
9. Read System Description #18 - Chemical Addition.
10. Read the following procedures:

    a. OP 2104-1.12 - Nuclear Plant Chemical Addition.
    b. OP 2103-1.2 - Soluable Poison Concentration Control.

11. Complete the Chemistry Questionnaire.
12. Read the following:

    a. OP 2103-1.7 - Water Chemistry
    b. EP 2202-1.1 - Reactor Trip
    c. EP 2202-3.1 - Fire
    d. OP 2104-6.1 - Fire Protection System
    e. EP 2203-1.5 - Loss of Makeup
    f. EP 2203-1.1 - Loss of Boron
    g. Tech Specs - Section 2

TOTAL POINTS TO DATE FROM ENCLOSURE 2 _____

WRITTEN TEST DATE _____ RESULTS _____

ORAL TEST DATE _____ RESULTS _____

ANSWERS MISSED, HANDED IN CORRECTED _____

SIGNSTURE OF LICENSED TRAINING COORD. _____ DATE _____

CYCLE 2-1

REFERENCE MATERIAL FOR QUESTIONNAIRES

REFERENCE #	TITLE
1	Makeup and Purification System Description #17.
2	Makeup OP 2104-1.2.
3	B&R Drawing #2024.
4	Decay Heat Removal System Description #20.
5	Decay Heat Removal OP 2104-1.3.
6	B&R Drawing #2026.
7	Unit II Standard Tech Specs.
8	Chemical Addition System Description #18.
9	OP 2104-1.12 - Nuclear Plant Chemical Addition.
10	OP 2103-1.2 - Soluble Poison Concentration Control.

DECAY HEAT REMOVAL QUESTIONNAIRE

2-1

1. During a cooldown, at what pressure and temperature is the DH System placed in operation? Explain. (Ref #4)

2. How many DHR circuits are necessary to remove design decay heat? Describe the flow path used for DH removal. (Ref #4)

3. What factors determine the amount of decay heat to be removed following a Reactor S/D? (Ref #4)

4. Concerning the BWST during Mode 1:

   a. What is the minimum allowable volume of water? (Ref #7)
   b. What is the minimum allowable Boron concentration? (Ref #7)
   c. How often must we verify (a) & (b)? (Ref #7)
   d. How can we assume a sample of the BWST is representative of the entire tank? (Ref #4)

5. Explain the function and operation of the interlocks associated with the following values:

   a. DH-V1
   b. DH-V171
   c. DH-V2
   d. DH-V100 A,B
   e. DH-V3
   f. DH-V102 A,B

6. During LP injection, describe what automatic and manual actions should occur when the BWST LO-LO Level alarm annunciates? Why must the above actions happen? (Ref #5)

7. Assuming the RCS is drained for head removal/refueling, what variable can we control to avoid a vortex and subsequent loss of DHR suction? How do we control these variables?

8. What must be donw to the MU and CF systems prior to placing the DH System in operation? Why? (Ref #5)

9. When purifying the RCS with the DH System, what precaution should be observed? Why?

MAKEUP AND PURIFICATION SYSTEM QUESTIONNAIRE

2-1

1. What gases are used to pressurize the Makeup Tank? When is each used? What function does each perform? (Ref #1)

2. Concerning RCS Letdown, how do we control: (Ref #1)

   a. Flow Rate
   b. Temperature
   c. Pressure

3. Describe the <u>functions</u> and <u>operation</u> of the interlock associated with MU-V376. (Ref #2)

4. When is RCP seal injection required? (Ref #2)

5. What is the minimum RCS makeup flow rate when RCS > 2500°F? Why? (Ref #2)

6. How many MU-P's must be operable for Mode #1 operation? What power sources are available for each MU-P? (Ref #2)

7. Where may letdown flow be directed other than the MU-T? When must flow be directed to the MU-T? Why? (Ref #2)

8. Explain the operation of the MU-P lubrication system during a pump startup. (Ref #2)

9. Which MU-P is normally running? Which MU-P is the normal standby pump? How is this pump placed in Standby? Which normal operating pump trips will start the standby pump? (Ref #2)

10. Assuming normal operating line-up, explain the consequences of moving the Backup pump selector switch to the "B-C" position. (Ref #2)

11. Describe how the MU System will respond to an SFAS actuation. What additional actions will occur when RB pressure reaches 4 psig? (Ref #2)

12. What precautions must be observed when placing a new MU resin bed in service? Why? (Ref #2)

13. What conditions will cause a "Feed and Bleed Enabled Borate-Deborate Alarm"? When is a Feed and Bleed operation terminated? (Ref #2)

14. Draw a simplified diagram of the MU System. Include all major valves, equipment and system interconnections. (Ref #3)

UNIT II CHEMISTRY QUESTIONNAIRE

2-1

1. Indicate the various end-point uses of the following chemicals: (Ref #8)

   a. Boric Acid
   b. Sulfuric Acid
   c. Sodium Hydroxide
   d. Lithium Hydroxide
   e. Hydrazine

2. Indicate the Steady State and Transient Limits for the following RCS chemistry: (Ref #9)

   a. Dissolved O2
   b. Chlorides
   c. Flouride

3. What overall plant conditions must be met in order to reduce RCS boron concentration? (Ref #10)

4. What is the minimum S/D margin we are allowed when doing a cold fill of the RCS with demin water? How can we determine we will meet the limit without adding more boron? (Ref #10)

TMI - 2

MU-P-1A/1C STARTING SEQUENCE

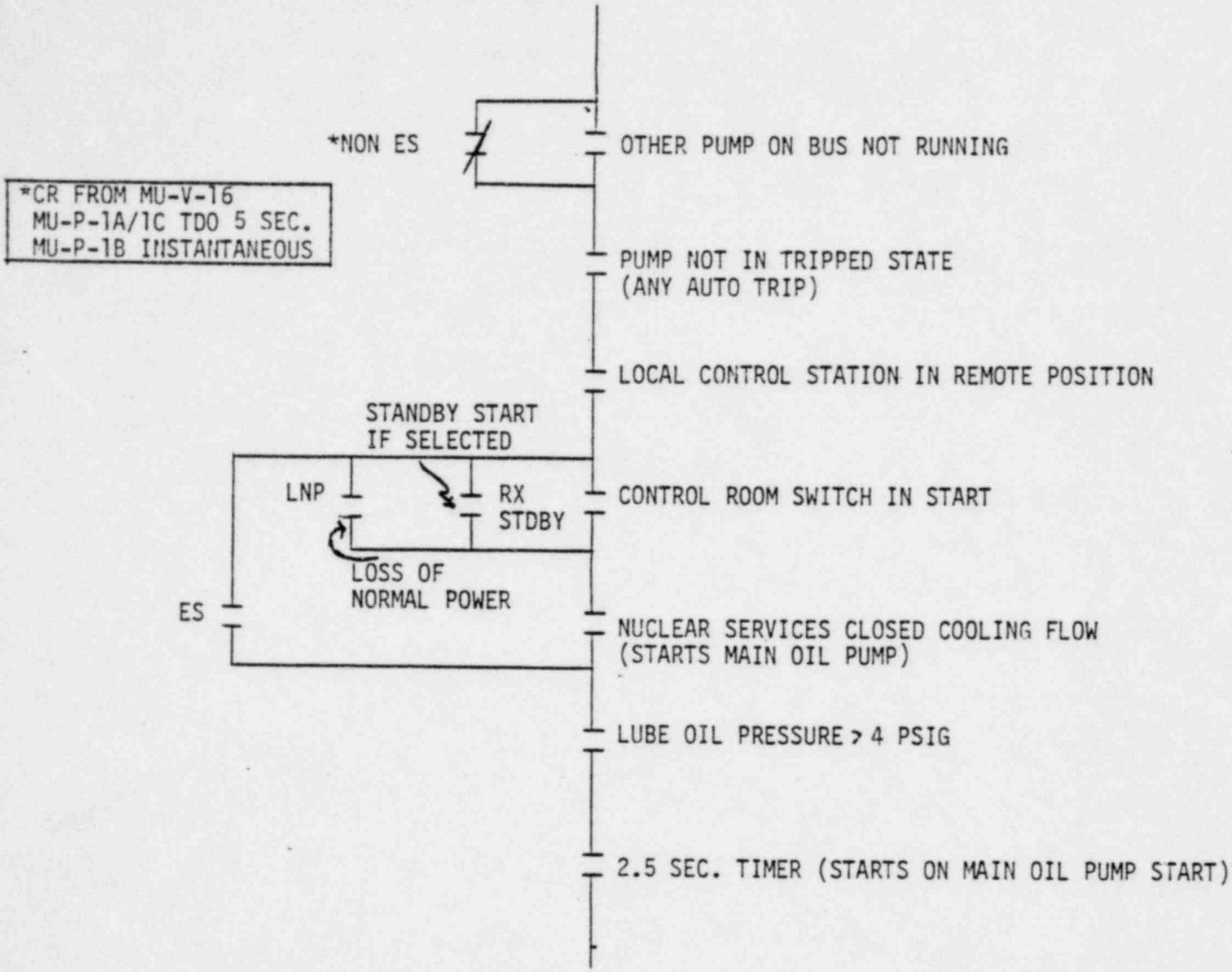

MU-P-1B START SEQUENCE

SAME AS 1A/1C EXCEPT TIMER SETTING IS 3.0 SECONDS

NOTE: LUBE OIL PUMP (AUX) RUNS 2 MINUTES AFTER SHUTDOWN

TMI - 2

MU-P-1A/1C BACKUP START

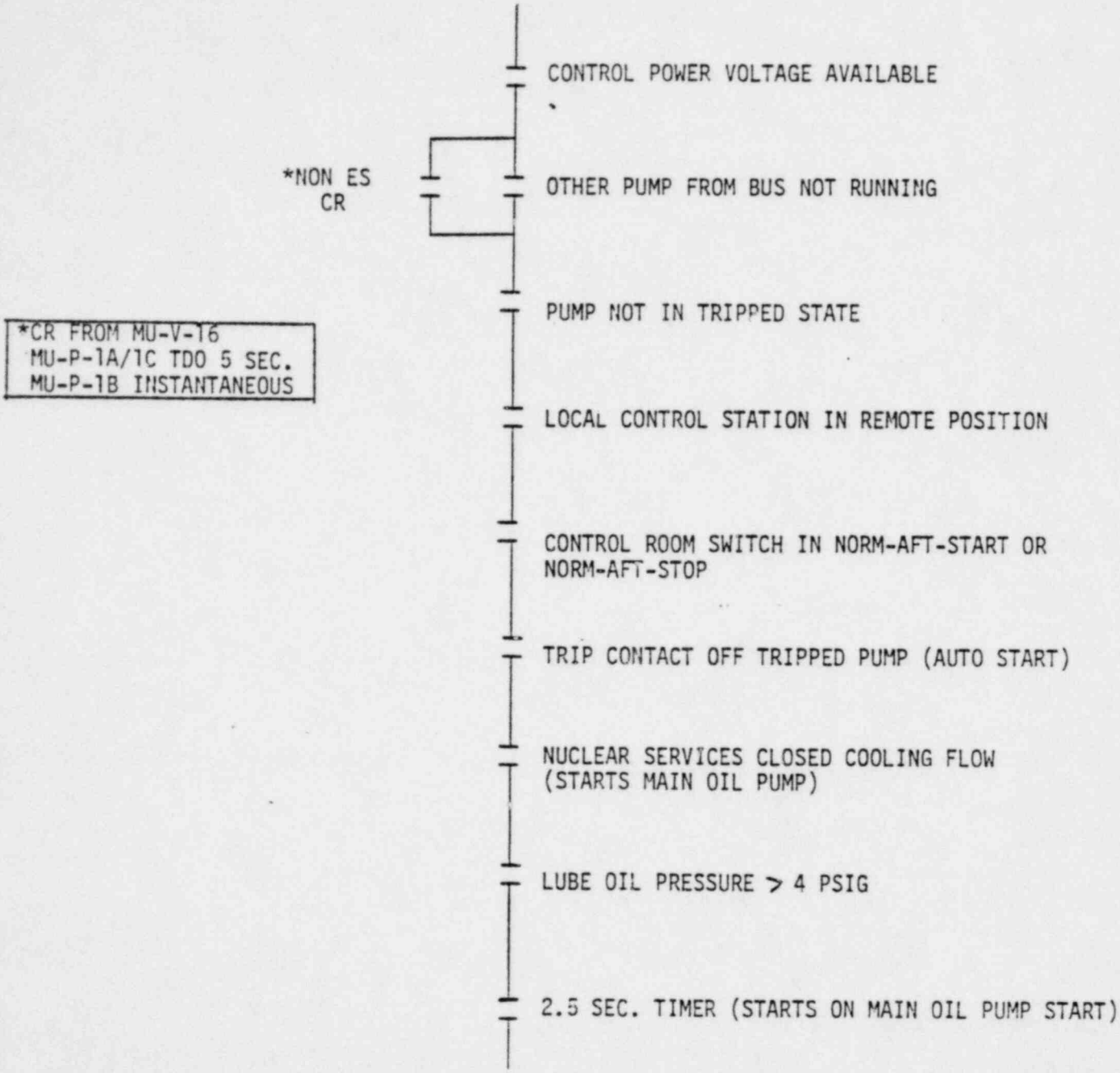

MU-P-1B BACKUP START

CHANGE 2.5 SEC. TIMER TO 3.0 SECONDS

ENCLOSURE 1

UNIT II CATEGORY IV ASSIGNMENT SHEET

CYCLE 2-2

NAME _____ START DATE _____

COMPLETION DATE _____

1. Read the following System Descriptions:

   A. #50 - SFAS
   B. #28B - Core Flood System
   C. #28A - R.B. Spray System
   D. #45B - R.B. Emergency Cooling

2. Read the following Procedures:

   A. OP 2105-1.3 - SFAS
   B. OP 2104-1.4 - RB Spray System
   C. OP 2104-1.1 - Core Flood
   D. OP 2104-5.1 - RB Normal and Emergency Cooling
   E. EP 2202-1.3 - Loss of RC/RC Pressure

3. Review the SFAS Hand Out

4. Complete the SFAS, Core Flood, Building Spray Questionnaire

5. Read the following Procedures:

   A. Plant Heatup - OP 2102-1.1
   B. Plant Startup - OP 2102-1.3
   C. Power Ops - OP 2102-2.1
   D. Plant Shutdown - OP 2102-3.1
   E. Plant Cooldown - OP 2102-3.2
   F. Appraoch to Criticality - OP 2102-1.2
   G. Hydrogen Purge - EP 2203-2.6
   H. Unanticipated Criticality - EP 2202-1.2
   I. Load Rejection - 2203-2.1

6. Read Section 3 of Standard Tech Specs

TOTAL POINTS TO DATE FROM ENCLOSURE 2 _____

WRITTEN TEST DATE _____ RESULTS _____

ORAL TEST DATE _____ RESULTS _____

ANSWERS MISSED, HANDED IN CORRECTED _____

_____ DATE: _____
SIGNATURE OF LICENSED TRAINING COORD.

REFERENCE MATERIAL FOR QUESTIONNAIRES

2-2

REFERENCE #	TITLE
1	System Description #28B - Core Flood
2.	Standard Tech Specs
3	OP 2104-1.1 - Core Flood System
4	SFAS Handout - provided

SFAS, CORE FLOOD AND BUILDING SPRAY QUESTIONNAIRE

2-2

1. Under normal operating conditions; what provides isolation between the CFT and the RCS? Is this same method suitable when the RCS is open for refueling? Explain. (Ref #1)

2. When operating at power, what indications do we have of leakage through CF-V4A, 5A? (Ref #1)

3. During Mode 1 operation, what are the core flood system limiting conditions? How often must each of these conditions be verified? (Ref #2)

4. At what point during a Startup and Shutdown do we cycle the CF-T isolation valves? (Ref #3)

5. How many SFAS actuation sections do we have? Why? What three (3) major subsections are included in each actuation? (Ref #4)

6. What parameters are monitored and used to actuate each of the following actuations. Include how many instruments are available, actuation setpoints, and the number of instruments that are required to cause the actuation. (Ref #4)

   a. Safety Injection
   b. RB Isolation and Cooling
   c. RB Spray

7. How many groups of components comprise each actuation section? Why are the components separated into groups? (Ref #4)

8. List the sources of water available to each of the indicated pumps during SFAS. Include order of preference and how each source is selected (auto or manual): (Ref #4)

   a. Make Up Pumps
   b. DH Pumps
   c. BS Pumps

9. What will cause the emergency diesel generators to start? Outline the starting logic assuming a station blackout has occurred. (Ref #4)

10. Following the conditions in question #9, will all previously running loads immediately restart? Explain

11. Describe the conditions which must be met in order to have the following indications: (Ref #4)
    a. "Protective Function Fully Enables"
    b. "Channel Tripped"
    c. "Bypass Reset Permit"
    d. "Bypass"
    e. "Defeat Permit"

12. When performing a test of Safety Injection manual actuation "A", why must the "Holding Coil" Push Button be depressed? (Ref #4)

13. What is the purpose of the channnel select switch in the auto actuation testing scheme? (Ref #4)

14. What are "critical service" valves and how are they treated differently during SFAS testing? (Ref #4)

15. How can the operation regain control of components actuated during a: (Ref #4)

    a. Manual SFAS actuation
    b. Auto SFAS actuation

16. Draw and label a simplified diagram of the ECCS. Include all major tanks, pumps, valves, etc.

SAFETY FEATURES

ACTUATION SYSTEM

THREE MILE ISLAND UNIT 2

####

INDEX

SECTION		PAGE
I.	OBJECTIVES	1
II.	FUNCTIONS	1
III.	GENERAL DESCRIPTION	2
IV.	DETAILED SYSTEM DESCRIPTION	3,4,5,6,7,8,9,10,11
V.	SYSTEM FACT SHEET	11,12,13
VI.	INTERLOCKS	13
VII.	MAJOR PARAMETERS	13
VIII.	TECHNICAL SPECIFICATIONS	13-29
IX.	DRAWINGS AND TABLES	30-72
1.	R.B. Pressure - Post LOCA	30
2.	R.B. Temperature - Post LOCA	31
3.	SFAS Cabinets (Signal Flowpath)	32
4.	ECCS Composite	33
5.	Control Room Panel 3 Status Indication and Manual Actuation	34
6.	Environmental Barrier Configurations	35,36,37,38
7.	Environmental Barrier Table	39
8.	R.B. Emergency Cooling	40
9.	R.B. Spray	41
10.	Core Flood	42
11.	Decay Heat Closed Cooling Water	43
12.	Nuclear Services Closed Cooling Water	44
13.	Safety Injection Block Diagram	45
14.	R.B. Cooling and Isolation Block Diagram	46
15.	R.B. Spray Block Diagram	47

SECTION		PAGE
16.	Safety Injection - Channel RC1A	48
17.	Safety Injection - Actuation	49
18.	Safety Injection - Test and Manual Actuation	50
19.	R.B. Isolation and Cooling - Channel RB1A	51
20.	R.B. Isolation and Cooling Test	52
21.	R.B. Isolation and Cooling Manual Actuation and Test	53
22.	R.B. Spray Actuation and Test	54
23.	"A" Diesel Generator Load Sequence	55,56,57,58,59,60,61
24.	"B" Diesel Generator Load Sequence	62,63,64,65,66,67,68
25.	ES Actuated Components	69,70,71,72
X.	REFERENCES	73
XI.	UNIT I/UNIT II COMPARISON	74

SAFETY FEATURES ACTUATION SYSTEM

(SFAS)

THREE MILE ISLAND UNIT 2

I. OBJECTIVES

A. To know the functions of the SFAS.

B. To know what signals will actuate the SFAS (including setpoints).

C. To be able to discuss normal and emergency operation of the SFAS and its associated systems.

D. To be able to discuss the interlocks and Technical Specifications associated with the SFAS.

II. FUNCTIONS

A. To detect a Loss of Coolant Accident (LOCA).

B. To initiate the required Engineered Safety Features (ESF) necessary to mitigate the consequences of a LOCA, such as:

1. Emergency Core Cooling (Safety Injection).
2. Reactor Building Isolation and Cooling.
3. Removal of fission products from the R. B. Atmosphere.
4. Availability of emergency on site electric power supplies.
5. Control Room Emergency Ventilation

C. The Engineered Safety Features (ESF) will:

1. Prevent core melt down.
2. Maintain the integrity of containment.
3. Ensure that the exposure of the public to radiation will be below the limits of 10 CFR 100.

III. GENERAL DESCRIPTION

A. The SFAS consists of 3 sections:

1. Reactor Building Spray Actuation
2. Reactor Coolant Safety Injection Actuation (Emergency Core Cooling)
3. Reactor Building Cooling and Isolation Actuation

B. Each section consists of two redundant independent actuations.

1. Actuation A--color coded Red
2. Actuation B--color coded Green

C. Each section is actuated by a 2 out of 3 logic matrix consisting of:

1. For R. B. Spray Actuation, 6 R. B. Pressure sensing channels (3 for Actuation A and 3 for Actuation B).
2. For Safety Injection Actuation, 3 RCS pressure sensing channels.
3. For R. B. Cooling and Isolation Actuation, 6 R. B. Pressure sensing channels (3 for Actuation A and 3 for Actuation B).

D. The 2 out of 3 logic on each system actuates

1. Safety Injection using the M U system for high pressure injection (HPI) and the D H system for low pressure injection (LPI).
2. R. B. Isolation--Containment Isolation Valves and the Environmental Barrier System.
3. R. B. Cooling using the B S System and R R System.
4. Removal of fission products in Reactor Building atmosphere by B. S. System.
5. Auto start of diesel generator to ensure availability of electrical power supplies.

IV. DETAILED SYSTEM DESCRIPTION

A. Signal Development

1. Reactor Coolant Pressure Sensing -

a. RC-3A-PT3, RC-3B-PT3 and RC-3A-PT4

b. Bistable Cabinets #124, #125, #126

1. Each Bistable Cabinet contains a trip and a bypass bistable.

2. Cabinets 124 and 126 contain a 320 psig bistable for DH-V1, 171 and 2 interlock.

2. Containment Pressure--High High (Building Spray)

a. BS-PS-3253, 4, 5, 6, 7 and 8.

b. Wired direct to Relay Cabinets (no bistables).

3. Containment Pressure--High (Reactor Building Isolation and Cooling).

a. BS-PS-3259, 3260, 3261, 3987, 3988 and 3989

b. Wired direct to Relay Cabinets (no bistables).

B. Actuation Logic

1. Four cabinets for each actuation logic

a. Three cabinets receive output from Bistable Cabinets for Safety Injection and from Containment Pressure-High pressure switches for Reactor Building Cooling and Isolation.

b. 4th Cabinet contains manual actuation relays

2. Each of the 3 auto actuation cabinets contains identical relays for component actuation.

a. Identical relays in 2 of the 3 cabinets must be tripped to satisfy contact matrices and actuate a particular component.

b. All relays are deenergize to actuate.

C. Automatic Initiation

1. Signal sequence for a major LOCA.

   a. 1600 psig RCS pressure

   b. 4 psig RB pressure

   c. 30 psig RB pressure

2. 1600 psig RCS pressure

   a. Signal development

      1. RC-3A-PT 3/4 and RC-3B-PT3

      2. Bistable Cabinets

      3. Actuation cabinets

      4. ESF components for HPI and LPI and associated support systems such as NR, NS, DC AND DG's

   b. H P Injection

      1. Flow Path

         a. BWST

         b. DH-V5's

         c. DH-V147's

         d. MU-P's

         e. MU-V16's

         f. RCS cold legs

         g. Reactor Vessel

      2. Flow Rate (MU-P's)

         a. 500 gpm each at 1080 psig discharge head

   c. L P Injection

      1. Flow Path

         a. BWST

b. DH-V5's

c. DH-P's

d. DH-V4's

e. Core Flood Nozzles

f. Reactor Vessel

2. Alternate Flow Paths

a. Piggy Back operation--DH-P discharge may be sent to MU-P suction via DH-V7's.

b. DH-P suction automatically shifted to Reactor Building sump when BWST at lo-lo level (6 ft.).

3. Flow Rate (DH-P's)

a. 3000 gpm each at 150 psig discharge head.

d. Decay Heat Closed Cooling Water (DC)

1. Cools DH-P's motor and pump

2. DH Removal Coolers

e. Nuclear Services River Water System (NR)

1. Flow Path

a. River Water Pumps House Intake

b. Following components through parallel paths

1. RWPH HVAC

2. DC Closed Coolers

3. Suction Reactor Building Emergency Cooler Booster Pumps

4. Control Building Booster Pumps

5. NS Closed Coolers

6. Diesel Generator Coolers

7. Return to river through MDC7 and Rad. Monitor Pit.

f. Nuclear Services Closed Cooling Water System (NS)

1. Provides Cooling Water To

a. MU Pumps

b. RR Pumps

c. BS Pumps

d. Spent Fuel Coolers

e. IA Compressors

3. 4 psig Reactor Building Pressure

(Containment Pressure--High)

a. Signal Development

1. BS-PS-3259, 3260, 3261 (3987, 3988, 3989)

2. Actuation Cabinets

3. ESF Components for Reactor Building Isolation and Cooling, HPI and LPI

a. HPI--same as above

b. LPI--same as above

b. Environmental Barrier System

1. Pressurizes CIV bodies to prevent out leakage from Reactor Building (provides third barrier to environmental leakage of containment atmosphere).

2. System utilizes 4 methods

a. CIV provided with metal diaphram or bellows

1. Functions to completely isolate valve's stem when valve is closed.

2. Used for the following CIV's

CA-V8, CF-V144, CA-V9, WDL-V1125, CF-V145, CA-V10, MU-V376, MU-V377, WDG-V199, WDL-V1126

b. Injecting water into bonnets of CIV's

1. Creates water seal between valve stem and bonnet

2. Must be manually actuated after the following conditions are satisfied:

a. R.B. isolation signal has been received

b. Indication that all valves served by a given local seal water tank are closed

3. Used for the following CIV's:

NS-V72, NS-V81, IC-V5, IC-V4, IC-V3

c. Additional check valve in the process line

1. Check valve has all joints seal welded

a. Reduces direct environmental leakage to zero

2. Used in the following process lines:

N_2 and fill to core flooding tanks

d. Additional globe valve in the process line

1. Valve arrangement reduces direct environmental leakage to near zero

2. Used in the N_2 and fill lines to Core Flooding Tanks

c. Penetration Pressurization (PP)

1. Maintains all electrical and mechanical penetration sleeve cavities at a pressure between 10.0-53.0 psig

2. System is completely passive

3. MS and FW are not pressured

4. Personnel access air locks, equipment access door, the flanges of the 2 fuel transfer tubes and the incore instrument replacement cable penetrations are not pressurized

d. R.B. Emergency Cooling (RR)

1. 2 RR-P's start

2. RB-V25's close, all RR-V5's and 6's open

3. RB-P's trip and RB-V2's close

4. Flow path

a. RR-P's take suction from NSRW

b. RR-V5's and RR-V6's

c. Cooling Coils

d. RR-V11's

e. MDCT

5. RR-V11's maintain back pressure to prevent out leakage from R.B.

6. AH-E-11's start in fast

e. R.B. Spray

1. BS-V1's open to establish flow path

NOTE: BS-V3's are locked open.

f. Control Room Emergency Ventilation

1. System switches to recirc mode of operation

a. AH-E-4A/B start and air passes through filters.

b. Dampers D 4092A,B,D, and ED4098 are positioned for recirculation

c. Starts C.B. RW Booster Pump, chilled water pump and liquid chiller unit.

4. 30 psig R.B. Pressure (Containment Pressure High-High)

a. Actuation logic (2/3) established in BS-P start circuit

1. BS-P-1A from BS-PS-3253,4,5

2. BS-P-1B from BS-PS-3256,7,8

b. BS-P's start

c. Flowrate: 1500 gpm each loop @ 150 psig.

D. ESF Electrical

1. Diesel Generators

a. ES (1600 psig or 4 psig) - Diesel Generator will start but not load

b. ES with UV - DG will start and sequence load per attached table

E. Manual Initiation

1. All manual initiation relays are energized to actuate

2. Controls located on Panel 3

a. 2 pushbuttons for each ESF actuation

1. PB1/RCA and PB1/RCB initiates safety injection

2. PB1/RBA and PB1/RBB initiates RB Isolation and Cooling and Safety Injection

b. Only PB1/RBA and PB1/RBB need to be depressed for complete ESF actuation

F. SFAS Testing

1. Manual Actuation System

a. Controls to allow testing are located on Panel 3

1. PB 8

a. Must be kept depressed during testing

b. Energizes holding coils for manual reset pushbuttons PB-2,3, and 4

2. PB-2, 3, and 4/RC (Manual actuation reset pushbuttons)

a. Allow separation of components required for safety injection

b. Each component group may be tested individually, thereby ensuring operability of all components without actually

initiating core injection

c. When PB1/RC (Safety Injection manual actuation pushbutton) is depressed, only the groups of components associated with the manual actuation reset pushbutton not depressed and held in by the holding coil of PB 8 will actuate

3. PB-2,3, and 4/RB (Manual reset pushbuttons)

a. Allow separation of components required for RB Isolation and Cooling

b. Each component group may be tested individually, thereby ensuring operability of all components without actually initiating RB isolation and cooling

c. When PB1 IRB (RB isolation and cooling manual actuation pushbutton) is depressed, only the groups of components associated with the manual actuation reset PB's not depressed and held in by the holding coils of PB 8 will actuate

d. PB1/RB will initiate safety injection unless PB-2, 3, and 4/RC are depressed also.

2. Automatic Actuation System

a. Controls to allow testing located on ESF Status Panel (Panel 13)

b. Safety Injection Testing

1. 4 position test switch (TS4/RCA(B))

a. Establishes the 2 channels which will be tested of the 3 channels existing for that actuation system

1. Position 1 OFF

2. Position 2 Channels 1 and 2

3. Position 3 Channels 2 and 3

4. Position 4 Channels 1 and 3

2. Group Test Pushbuttons (TS1, TS2 and TS3)

a. Separates componetns into groups such that safety injection will out occur during testing

c. R.B. Isolation and Cooling

1. 4 position test switch (TS4/RBA(B))

a. Establishes test channel logic as in 2.b.1.a above

2. Group Test Pushbuttons (TS1, TS2 and TS3)

a. Separates components into groups such that R.B. Isolation and Cooling will not occur during testing

G. Safety Injection Bypass

1. When RCS pressure is reduced to 1820 psig for each safety injection channel will trip and illuminate the white BYPASS PERMIT LIGHT on panel 3

2. Between 1820 and 1600 psig the Bypass (PB1/RC) pushbutton (Amber Light) for each channel must be depressed to prevent actuation

3. Safety injection channels automatically reset at 1820 psig increasing RCS pressure

V. SYSTEM FACT SHEET

A. Electrical Power Supplies

1. 120 VAC Vital Power Supply 2-1V

a. Bistable Cabinet Channel 1 (Cabinet 124)

b. Actuation 1 Relay Cabinets

1. Actuation B Cabinet 201

2. Actuation A Cabinet 133

c. Actuation A Indicating Lights Power Supply Panel 13

EDG START LOGIC

1. ES Actuation - EDG receives start signal immed ately
2. UV on 2-1E/2-2E
   a. Load shedding and UV alarm immediately.
   b. 3 seconds after UV, normal feeder trips and alternate feeder shuts.
   c. EDG receives start signal if bus voltage not restored 2 seconds after alternate feeder shuts.
   d. If the alternate feeder bkr. fails to restore bus voltage within 3 seconds from the time it received a signal to close, it will trip.
   e. EDG will then reenergize the bus when up to rated voltage and frequency if other conditions also satisfied for EDG Bkr. auto-closure.

EDG SEQUENCE LOAD TEST

1. Accomplished in conjunction with manual actuation PB's.
2. For test monitoring, use 3 lights over SEQUENCE LOAD TEST PB on Pnl. 13.
   a. RIGHT LIGHT - lights when EDG SEQUENCE LOAD (START) TEST PB is depressed.
   b. CENTER LIGHT - lights when SI or RB manual actuation TEST PB is depressed if:
      1.) No auto ES actuation signal (less than 2 channels tripped)
      2.) Normal feeds to 2-1E/2-2E closed
      3.) EDG SEQ. LOAD (START) TEST PB depressed
   c. LEFT LIGHT - lights 120 seconds into test. Tells operator test will auto-terminate in 120 seconds.
3. Test will stop:
   a. Automatically 4 minutes after depressing PB1/RC- or PB1/RB- (manual actuation PB's)
   b. When EDG SEQ. LOAD (STOP) TEST PB is depressed
   c. 2 out of 3 channels tripped on auto actuation system (ES actuation)

G. LOADING SEQUENCE

1. Blackout with ES (UV and ES)

   a. No time delay

      1. D.G. Room, H&V
      2. R.B. cooling valves, R.B. Isol. valves, MU & DH valves, NS-P1 A/B & valves, MU-P lube oil pumps, DH-P1 A/B, Rectifiers (Battery chargers)
      3. DG auxiliaries
      4. Control Building lighting
      5. Radiation Monitoring

   b. Following T.D.

      1. 2.5 sec. - MU-P1 A/C
      2. 3 sec. - MU-P1 B if its selected STBY pump has <u>not</u> yet started.
      3. 5 sec. - NS-P1 c if A/B <u>not</u> started
      4. 6 sec. - EF-P2A/B
         DC-P1A/B Control Room
         AH-E4A/B
         AH-C16A/B
      5. 10sec. - NR-P1A/B/C/D (One per loop)
      6. 14 sec. - BS-P1A/B
         AH-C17A/B (Cable Room)
         AH-C19A/B (Mech. Equip. Room)
         AH-C20A/B (Screen House)
      7. 16 sec. -AH-E11A/B/C/D/E (R.B. Vent)
      8. 89 sec. - RR-P1A/B/C/D (One per loop)
         NR-P2A/B (C.B. Booster Pumps)

2. Blackout without ES (UV <u>ONLY</u>)

   a. No time delay

      1. H&V - EDG Bldg.
      2. EDG auxiliaries
      3. Battery Rectifiers
      4. Rad. Monitoring
      5. Control Bldg. lighting
      6. MU-P oil pumps

   b. After time delay

      1. 2.5 sec. MU-P (soon to be eliminated as per R.W. Bensel)
      2. 6 sec. - NS-P1A/B
      3. 11 sec. - NS-P1C (if A/B not started)
      4. 12 sec. - H&V Control Room (AH-C16A/B)
         EF-P2A/B
      5. 16 sec. - NR-P1A/B/C/D (one per loop)
      6. 20 sec. - H&V Cable Room
         H&V Mech. Equip. Room
         H&V Screen House

2. 120 VAC Vital Power Supply 2-2V

   a. Bistable Cabinet Channel 2 (Cabinet 125)

   b. Actuation / Relay Cabinets

      1. Actuation A Cabinet 198

      2. Actuation B Cabinet 202

   c. Actuation B Indicating Lights Power Supply Panel 13

3. 120 VAC Vital Power Supply 2-3V

   a. Bistable Cabinet Channel 3 (Cabinet 126)

   b. Actuation/Relay Cabinets

      1. Actuation A Cabinet 199

      2. Actuation B Cabinet 203

4. 125 VDC Panel DCC-1A

   a. Actuation A Cabinet 200

5. 125 VDC Panel DCC-2A

   a. Actuation B Cabinet 204

B. All ESF bistables are automatic reset

C. Bistables for interlocking operation of DH-V1, 171 and 2 are auto reset

D. Bypass bistables are automatic reset

E. Tripping of a bypass bistable will not automatically bypass an ESF channel. Operator action is required.

F. The status of all ESF componetns is indicated on Panel 13 in the Control Room

   1. Red or Green light - normal condition or position

   2. White light - ESF position or condition

   3. Amber light - Normal condition

   4. Blue light - ESF condition

H. NaOH is added to the BS and DH systems to raise the pH of borated water added during safety injection and containment atmosphere spraying

VI. INTERLOCKS

A. 320 psig bistable, cabinet 124 interlocks DH-V1 and 171 to close when RCS pressure is > 320 psig

B. 320 psig bistable, cabinet 126 interlocks DH-V2 to close when RCS pressure is >320 psig

C. Electrical interlocks prevent components with dual power supplies from starting on both actuations

D. ES signals prevent ties between safety features buses from being closed during ESF conditions

E. Lo-Lo level in the BWST is interlocked to automatically switch suction from the BWST to the RB sump

VII. MAJOR PARAMETERS

A. Safety Injection Bistables (BT-1,2,&3) will trip at 1600 psig RCS pressure (decreasing), reset at 1600 psig (increasing)

B. Safety Injection Bypass Bistables (BT-4,5&6) will trip at 1820 psig RCS pressure (decreasing) reset at 1820 psig (increasing)

C. RB Isolation and Cooling Pressure switches trip at 4 psig (increasing)

D. HPI flow rate = 500 gpm each pump at 600 psig discharge pressure

E. LPI flow rate = 3000 gpm each pump at 100 psig discharge pressure

F. RB spray flow = 1500 gpm each loop at 55 psig RB pressure

VIII. TECHNICAL SPECIFICATIONS

TABLE 1
SAFETY FEATURES ACTUATION SYSTEM INSTRUMENTATION

FUNCTIONAL UNIT	TOTAL NO. OF CHANNELS	CHANNELS TO TRIP	MINIMUM CHANNELS OPERABLE	APPLICABLE MODES
1. Safety Injection (HPI & LPI)				
a. Manual Actuation	2(1)	2	2	1,2,3,4
b. RCS Pressure-Low	3	2	2	1,2,3
c. Actuation Logic	2(1)	2	2	1,2,3
d. Containment Isolation and Cooling Actuation Relay	3(1)	2	2	1,2,3
2. Containment Spray				
a. Manual Initiation	2(2)	2	2	1,2,3,4
b. Containment Isolation and Cooling Manual Initiation	2(3)	2	2	1,2,3,4
c. Containment Pressure - High-High	3 per Actuation	2 per Actuation	2 per Actuation	1,2,3
d. Actuation Logic	3(2)	2	2	1,2,3
e. Containment Isolation and Cooling Actuation Logic	2(2)	2	2	1,2,3
3. Containment Isoaltion and cooling				
a. Manual Initiation	2	2	2	1,2,3,4
b. Containment Pressure-High	3 per Actuation	2 per Actuation	2 per Actuation	1,2,3
c. Actuation Logic	2	2	2	1,2,3
4. Main Steam Isolation				
a. Manual Initiation	2	2	2	1,2,3
5. Containment Emergency Sump Suction		Later		
6. Feedwater Isolation				
a. Steam Generator Pressure-Low	2 per OTSG	1 per OTSG	2 per OTSG	1,2,3

TABLE 1 NOTATION

1. Each channel actuates one HPI and one LPI system.
2. Each channel actuates one Spray Pump.
3. Each channel actuates flow path values for one spray pump.

DRAFT

TABLE 2

ENGINEERED SAFETY FEATURE ACTUATION SYSTEMS INSTRUMENTATION TRIP SETPOINTS

FUNCTIONAL UNIT	TRIP SETPOINT	ALLOWABLE VALUES
1. SAFETY INJECTION (High Pressure and Low Pressure Injection)		
a. Manual Initiation	Not Applicable	Not Applicable
b. RCS Pressure-Low	≥ (1600) psig	≥ ( ) psig
c. Actuation Logic	Not Applicable	Not Applicable
d. Containment Isolation and Cooling Actuation Relay	Not Applicable	Not Applicable
2. CONTAINMENT SPRAY		
a. Manual Initiation	Not Applicable	Not Applicable
b. Containment Isolation and Cooling Manual Initiation	Not Applicable	Not Applicable
c. Containment Pressure--High-High	≤ 30 psig	≤ ( ) psig
d. Actuation Logic	Not Applicable	Not Applicable
e. Containment Isolation and Cooling Actuation Logic	Not Applicable	Not Applicable

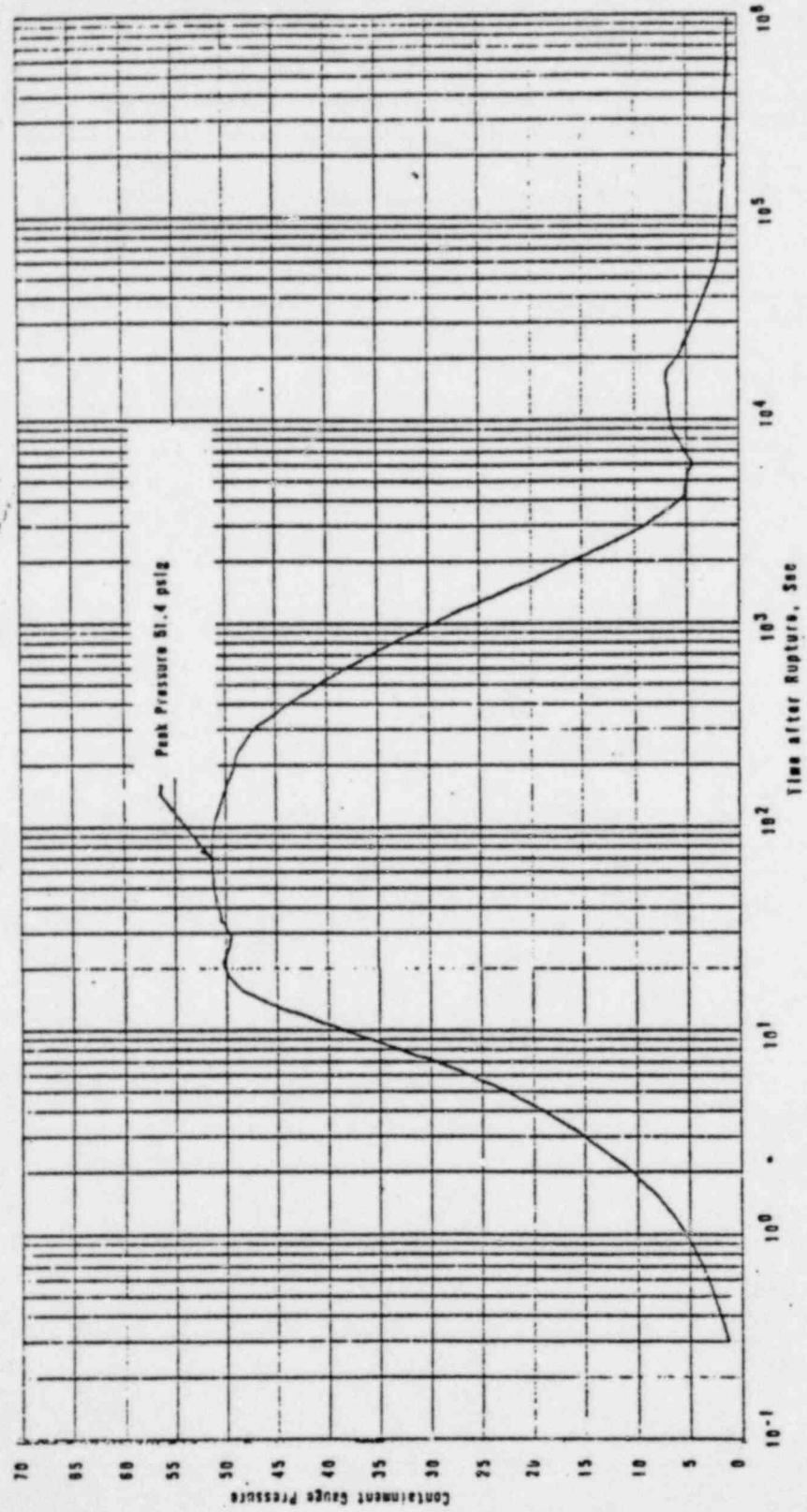

CONTAINMENT TOTAL PRESSURE AS A FUNCTION OF TIME FOR DBA (5.0 FT^2 HLB)

THREE MILE ISLAND NUCLEAR STATION UNIT 2

FIGURE 6.2–4

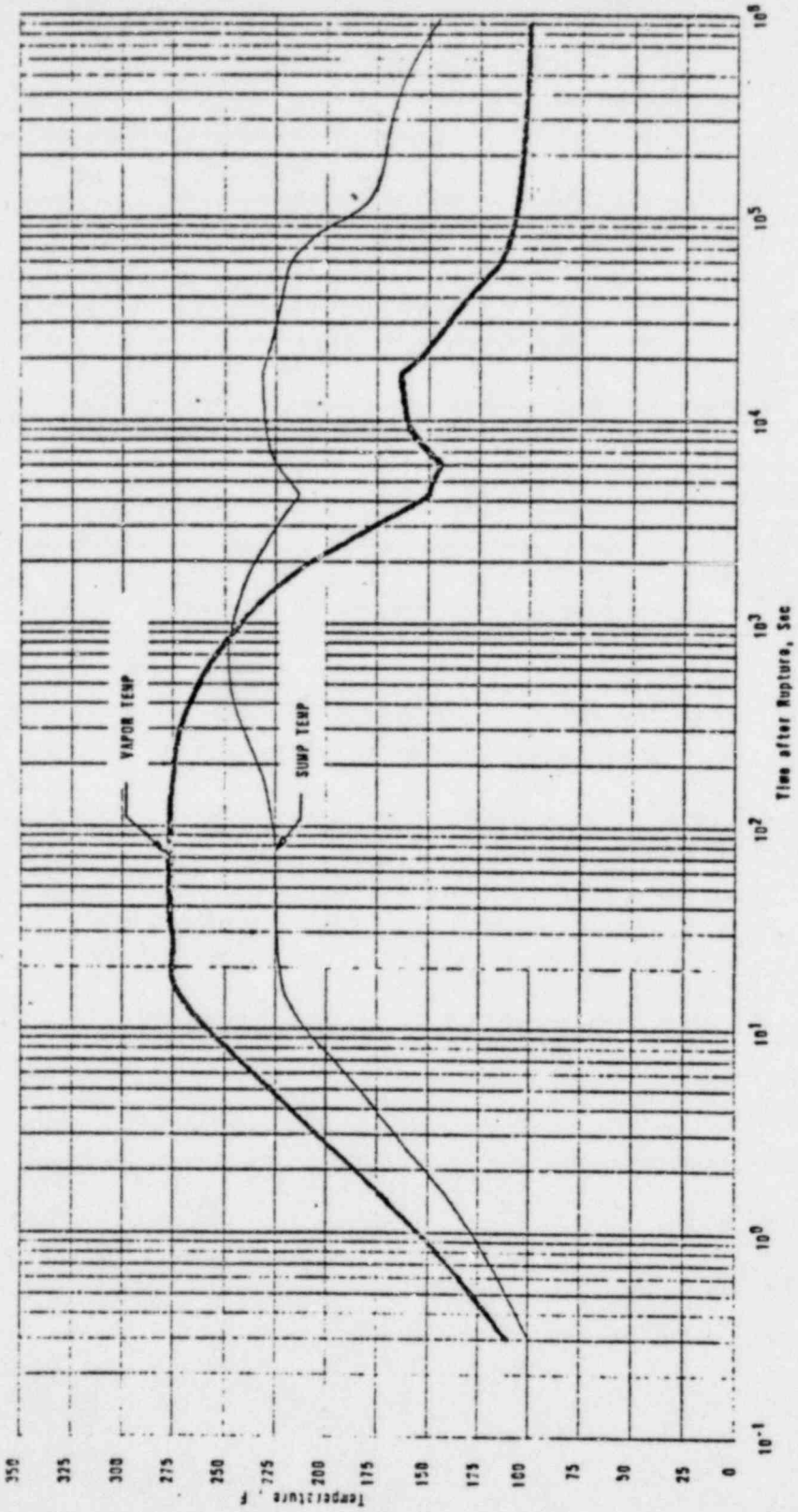

CONTAINMENT TEMPERATURES AS A FUNCTION OF TIME FOR DBA (5.0 FT^2 HLB)
THREE MILE ISLAND NUCLEAR STATION UNIT 2

FIGURE 6.2-

SFAS CABINETS (Signal Flowpath)

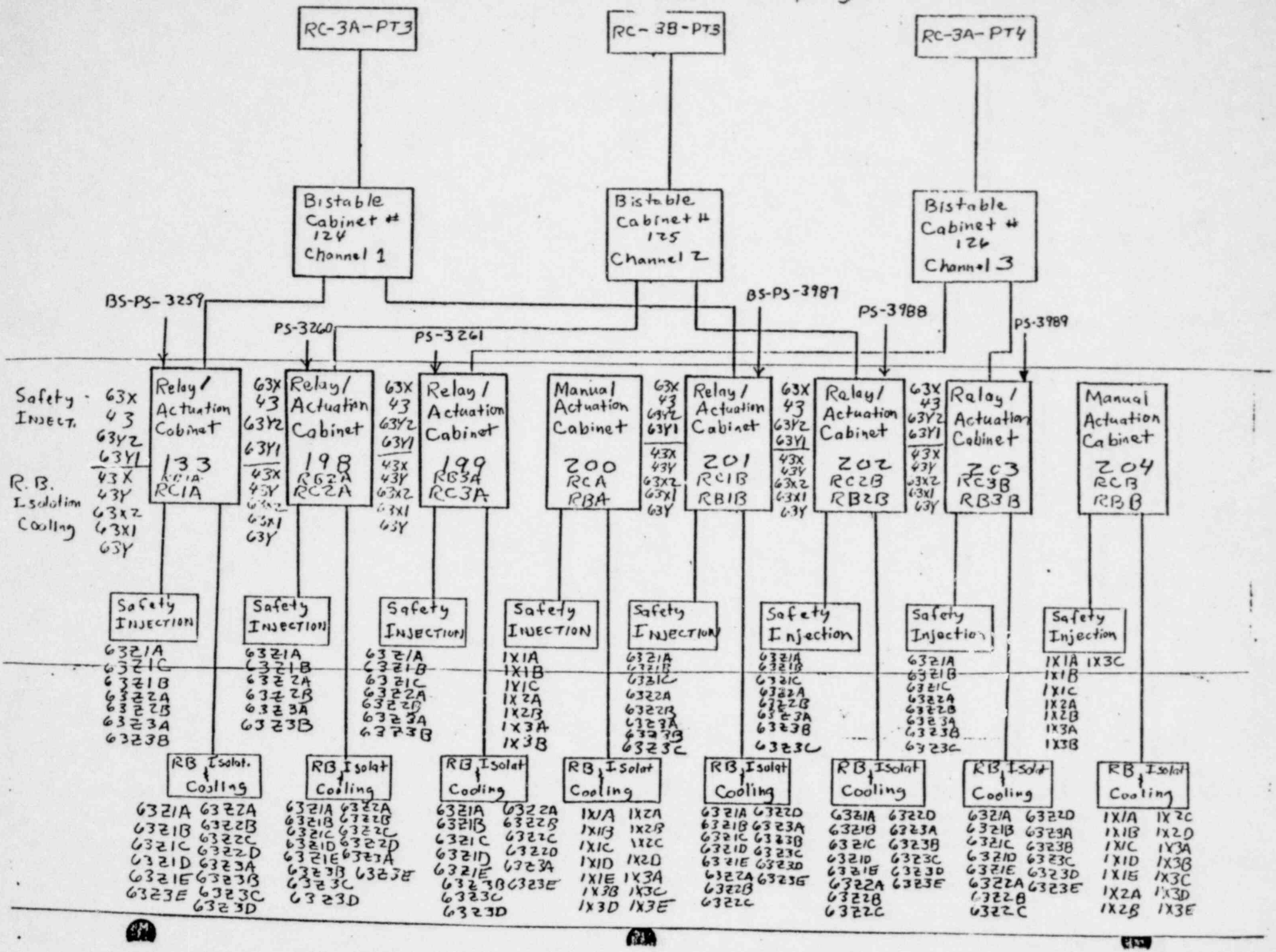

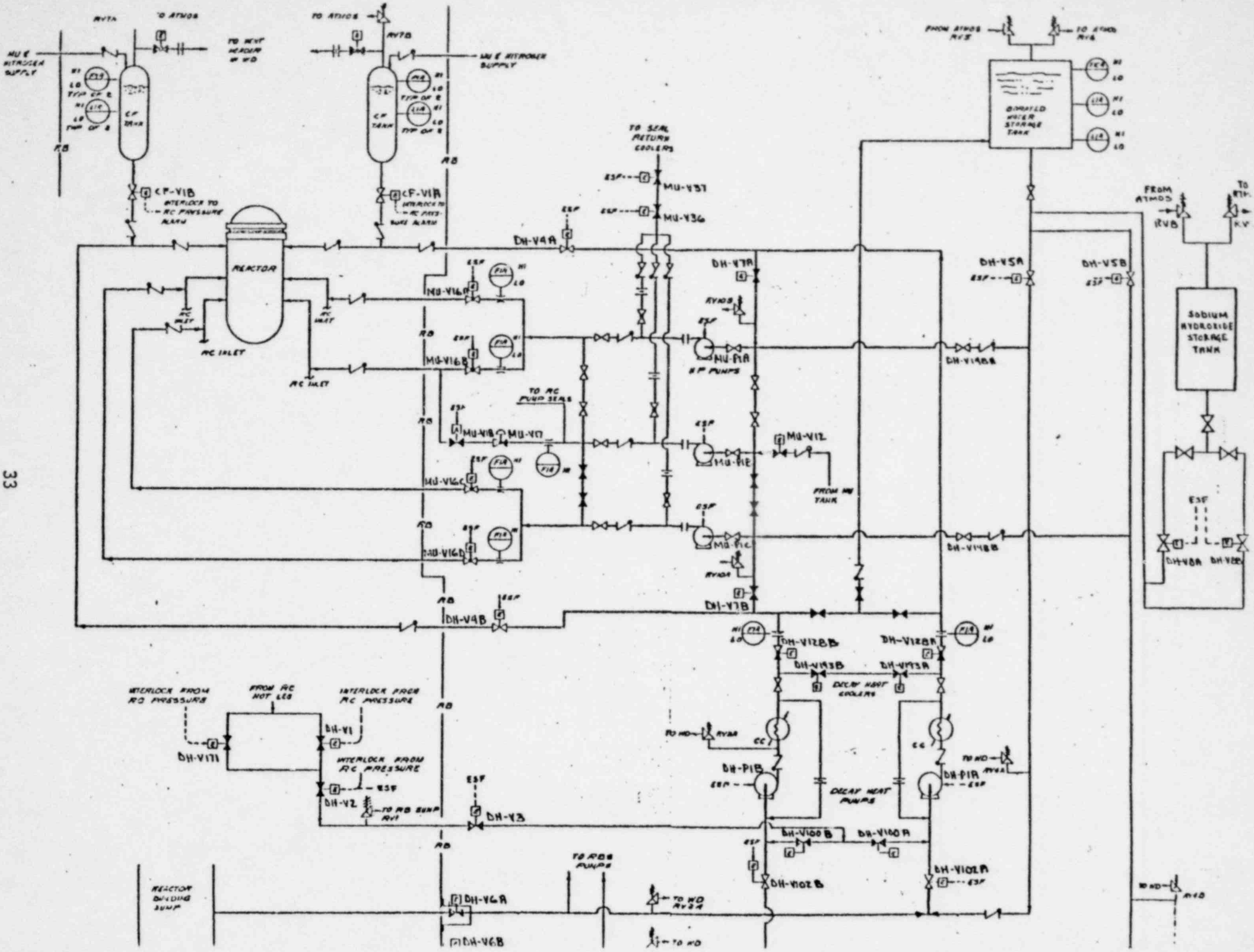
REACTOR
RC INLET
CF-V1B
CF-V1A
INTERLOCK TO RC PRESSURE ALARM
TO ATMOS
TO NEXT HEADER IN RB
N2 E NITROGEN SUPPLY
CF TANK
TYP OF 2
TO SEAL RETURN COOLERS
MU-V37
MU-V36
DH-V4A
DH-V4B
DH-V7A
DH-V7B
MU-V16A
MU-V16B
MU-V16C
MU-V16D
MU-V18
MU-V17
TO RC PUMP SEALS
MU-P1A
MU-P1B
MU-P1C
MU-V12
FROM MU TANK
DH-V19BA
DH-V19BB
DH-V5A
DH-V5B
BORATED WATER STORAGE TANK
SODIUM HYDROXIDE STORAGE TANK
DH-V8A
DH-V8B
DH-V12BB
DH-V12BA
DH-V13B
DH-V13A
DECAY HEAT COOLERS
DECAY HEAT PUMPS
DH-P1B
DH-P1A
DH-V100B
DH-V100A
DH-V102B
DH-V102A
DH-V1
DH-V2
DH-V3
DH-V6A
DH-V6B
DH-V11
INTERLOCK FROM RC PRESSURE
FROM RC HOT LEG
TO RB SUMP
TO RBS PUMPS
REACTOR BUILDING SUMP
TO HD
FROM ATMOS
RB

PANEL 3

ACTUATION A

EMERG. CORE INJECT RB Cool & ISO

MANUAL ACTUATION & TEST

PB 8 AMBER LIGHT — HOLDING COIL

PB1 RCA — MANUAL TRIP

PB1 RBA — MANUAL TRIP

PB2 WHITE LIGHT — PB3 — PB4 — PB2 — PB3 — PB4

RESET PUSHBUTTON — RESET PUSHBUTTON

EMER CORE INJECTION

CHAN. 1	CHAN 2	CHAN 3
PROTECT FUN FULL ENABLE	Push Button & GREEN LIGHT	CHAN RESET
CHANNEL TRIPPED	BLUE LIGHT	< 1600psig
BYPASS PERMIT	WHITE LIGHT	< 1820psig
BYPASS	Push Button & AMBER LIGHT	PB 1/RC
BYPASS RESET PERMIT	WHITE LIGHT	> 1600psig NOT RESET
BYPASS RESET	Push Button & GREEN LIGHT	PB 2/

RB COOLING & ISOLATION

PROTECT FUN. FULLY ENABLED	Push Button & GREEN Lt.	CHAN RESET PBx
CHANNEL TRIPPED	BLUE LIGHT	>4psig
DEFEAT PERMIT	WHITE LIGHT	THIS CHANNEL AND ONE OTHER TRIPPED
DEFEAT	Push Button AMBER Lt.	PB1
DEFEAT RESET	Push Button GREEN Lt.	PB2
BLANK	BLANK	BLANK

ACTUATION B

EMERG CORE INJECT RB COOL & ISOL.

MANUAL ACTUATION & TEST

PB8 AMBER LIGHT — HOLDING COIL

PB1 RCB — MANUAL TRIP

PB1 RBB — MANUAL TRIP

PB2 WHITE LIGHT — PB3 — PB4 — PB2 — PB3 — PB4

RESET PUSHBUTTON — RESET PUSHBUTTON

EMERG. CORE INJECTION

CHAN 1	CHAN 2	CHAN 3
PROTECT FUN FULL ENABLE	PUSH BUTTON & GREEN LIGHT	CHAN RESET
CHANNEL TRIPPED	BLUE LIGHT	< 1600psig
BYPASS PERMIT	WHITE LIGHT	< 1820psig
BYPASS	PUSH BUTTON & AMBER LIGHT	PB1/RC
BYPASS RESET PERMIT	WHITE LIGHT	> 1600psig NOT RESET
BYPASS RESET	PUSH BUTTON & GREEN LIGHT	PB2/

RB COOLING & ISOLATION

PROTECT FUN FULL ENABLE	PUSH BUTTON GREEN LIGHT	CHAN RESET PBx
CHANNEL TRIPPED	BLUE LIGHT	>4psig
DEFEAT PERMIT	WHITE LIGHT	THIS CHANNEL & ONE OTHER TRIPPED
DEFEAT	PUSH BUTTON AMBER Lt.	PB1
DEFEAT RESET	PUSH BUTTON GREEN	PB2
BLANK	BLANK	BLANK

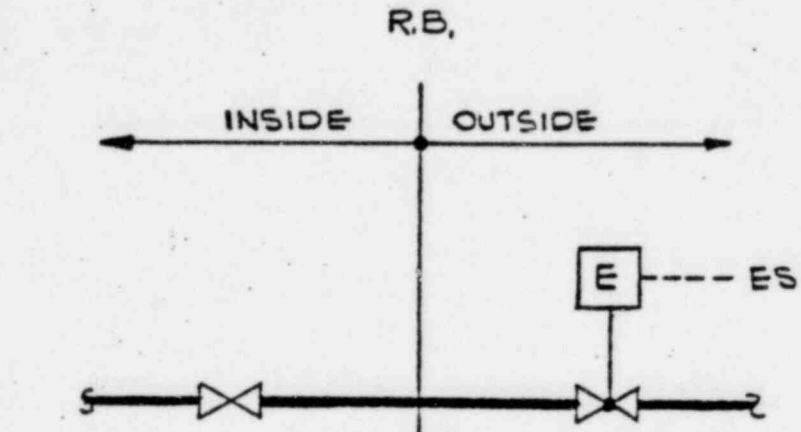

1ST LEAKAGE BARRIER PROVIDED BY ISOLATION VALVE

2ND & 3RD LEAKAGE BARRIERS PROVIDED BY GLOBE VALVE WHICH INCORPORATES A STEM SEAL SUCH AS A METAL DIAPH. OR A METAL BELLOWS.

THIS APPLICATION IS FOR USE ON LINE SIZES OF 4" & UNDER.

FIG. 6.2-39A

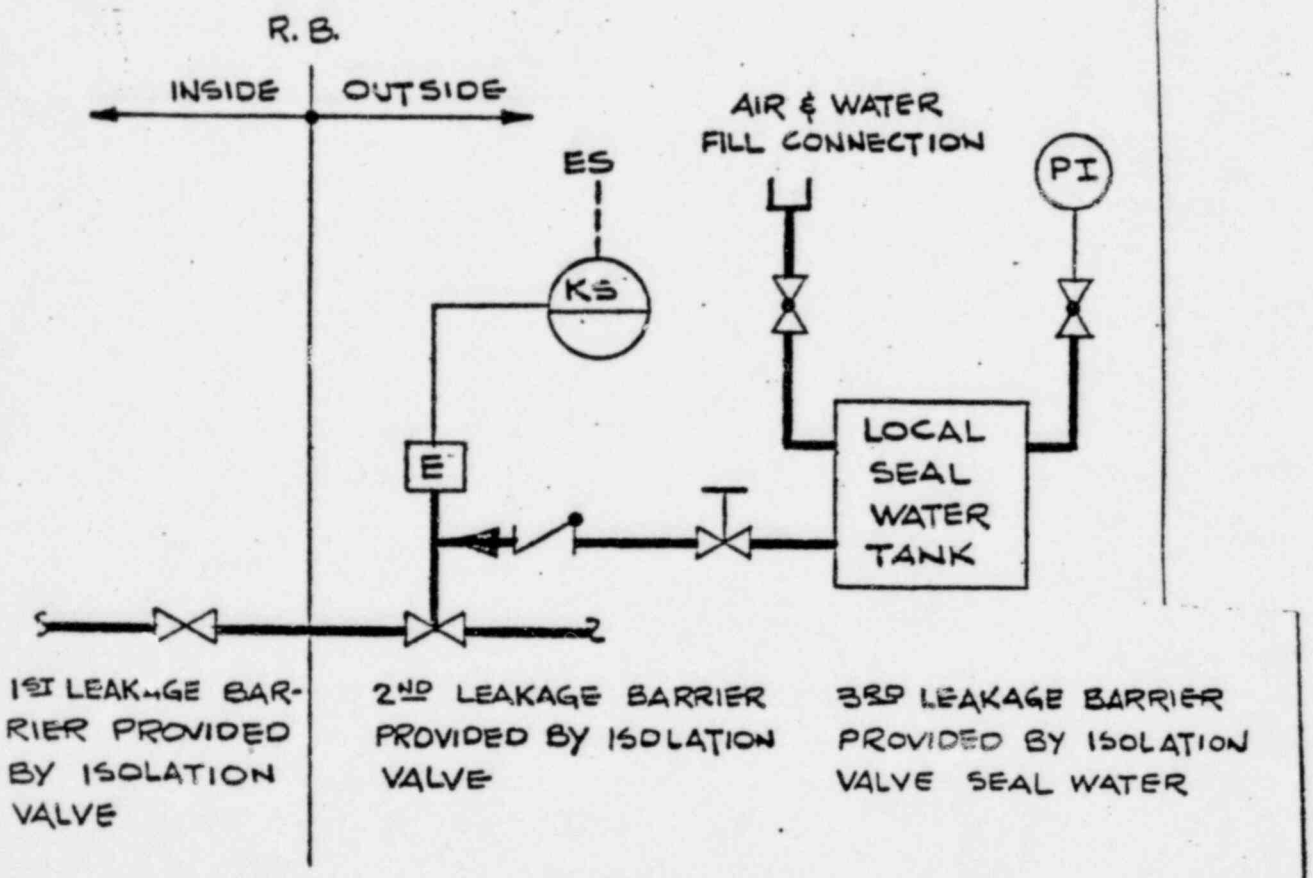
R. B.
INSIDE
OUTSIDE
AIR & WATER
FILL CONNECTION
ES
PI
KS
E
LOCAL
SEAL
WATER
TANK
1ST LEAKAGE BARRIER PROVIDED BY ISOLATION VALVE
2ND LEAKAGE BARRIER PROVIDED BY ISOLATION VALVE
3RD LEAKAGE BARRIER PROVIDED BY ISOLATION VALVE SEAL WATER

FIG. 6.2 - 39B

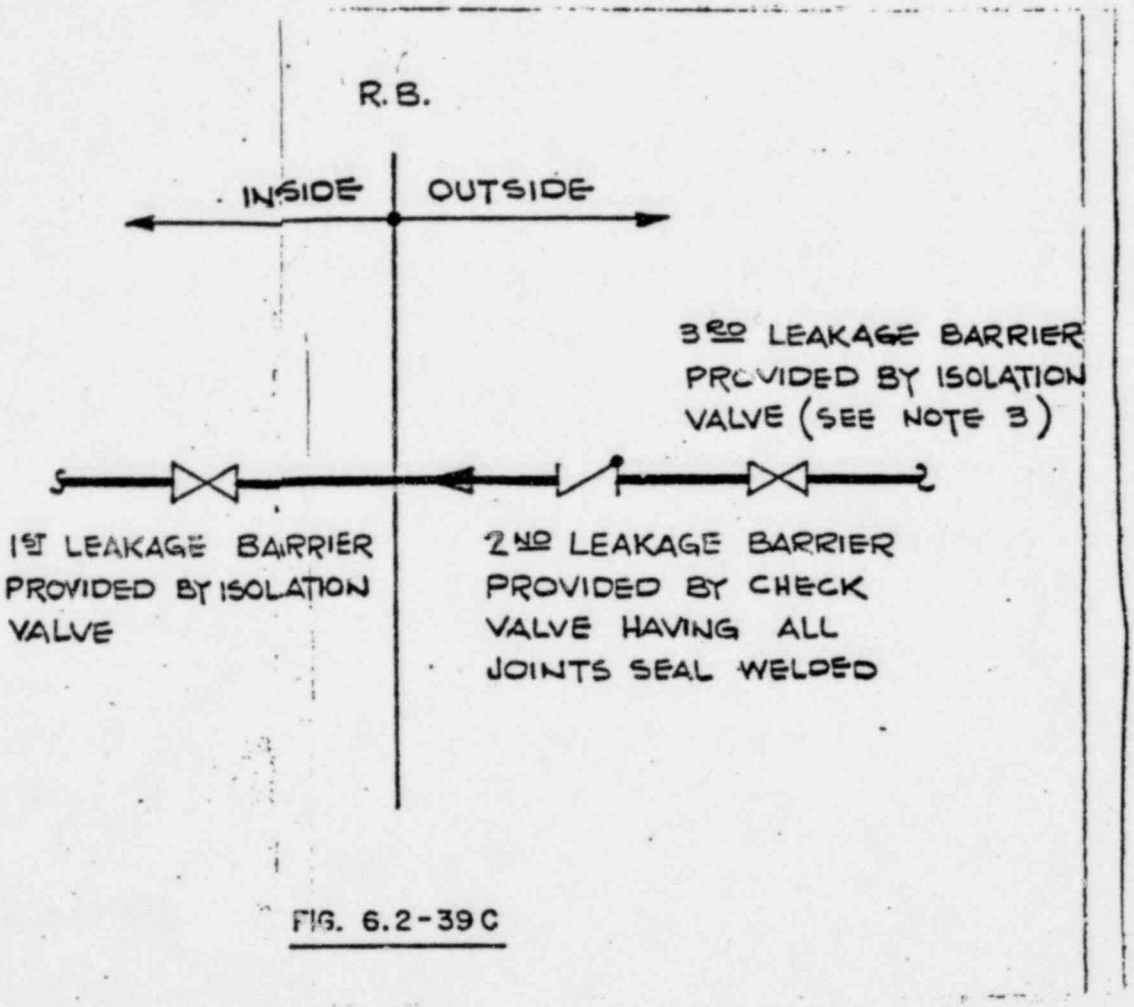
R.B.
INSIDE
OUTSIDE
3RD LEAKAGE BARRIER PROVIDED BY ISOLATION VALVE (SEE NOTE 3)
1ST LEAKAGE BARRIER PROVIDED BY ISOLATION VALVE
2ND LEAKAGE BARRIER PROVIDED BY CHECK VALVE HAVING ALL JOINTS SEAL WELDED

FIG. 6.2-39C

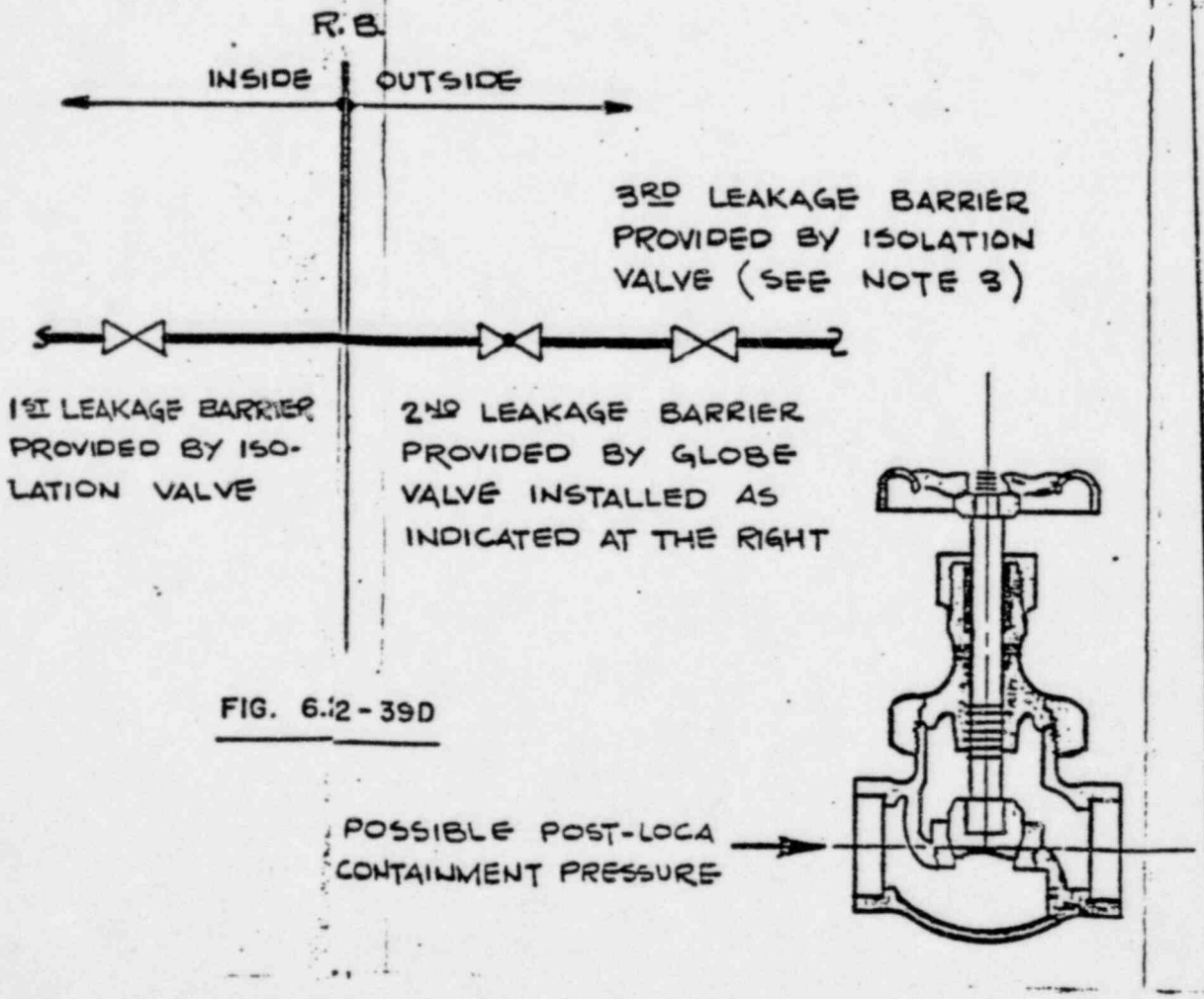
R.B.
INSIDE
OUTSIDE
3RD LEAKAGE BARRIER PROVIDED BY ISOLATION VALVE (SEE NOTE 3)
1ST LEAKAGE BARRIER PROVIDED BY ISOLATION VALVE
2ND LEAKAGE BARRIER PROVIDED BY GLOBE VALVE INSTALLED AS INDICATED AT THE RIGHT
POSSIBLE POST-LOCA CONTAINMENT PRESSURE

FIG. 6.2-39D

TABLE E

TABLE 6.2-23

CONTAINMENT PIPING PENETRATIONS INCORPORATING ENVIRONMENTAL BARRIERS

Penetration Number	Process System	FSAR Fig. Number	Line Size (Inches)	Isolation Valve No.	Isolation Va. Arrg't. (See Fig. 6.2-31)	Isolation Va. Type	Environ. Barrier Fig. No.	Environ. Barrier Initiation Method
R-526	Steam Generator Sample Line	9.3-5	1/2	**	3	Globe	6.2-39A	AUTO
R-527	Core Flooding Tank Bleed and Sample	6.2-27	1	**	4	Globe	6.2-39A	AUTO
R-528	Steam Generator Sample Line	9.3-5	1/2	**	3	Globe	6.2-39A	AUTO
R-529	Reactor Coolant Drain Pump Discharge	11.2-1	4	**	3	Globe	6.2-39A	AUTO
R-537	N_2 and Fill to Core Flooding Tank	6.2-27	1	CF-V114B&CF-V137B	7	Globe	6.2-39C&D	AUTO & N.C. Manual*
R-538	Pressurizer Steam and Water Space Sample Line	9.3-2	1/2	**	8	Globe	6.2-39A	AUTO
R-541	Letdown Line to Purification Demin.	9.3-6	2-1/2	**	9	Globe	6.2-39A	AUTO
R-544	N_2 and Fill to Core Flooding Tank	6.2-27	1	CF-V114A&CF-V137A	7	Globe	6.2-39C&D	AUTO & N.C. Manual*
R-545D	R.C. Pump Seal Water Return	9.3-6	2	**	12	Globe	6.2-39A	AUTO
R-546	Pressurizer, Steam Generator and Core Flooding Tank Vents	11.3-1	4	**	3	Globe	6.2-39A	AUTO
R-547	Reactor Bldg. Sump Pump Discharge	11.2-2	4	**	3	Globe	6.2-39A	AUTO
+ R-557	N.S. Closed Cooling Water to R.C. Pump Oil & Motor Coolers	9.2-5	8 & 1/2	NS-V72&NS-V210	18	Gate & Globe	6.2-39B&D	Manual & N.C. Manual*
+ R-558	N.S. Closed Cooling Water From R.C. Pump Oil & Motor Coolers	9.2-5	8	NS-V81	3	Gate	6.2-39B	Manual
+ R-559	I.C. Cooling Water to Roller Nut Drive Cooling Coils	9.2-7	3	IC-V5	18	Gate	6.2-39B	Manual
+ R-563	I.C. Closed Cooling System	9.2-7	6 & 1/2	IC-C4&IC-V207	18	Gate & Globe	6.2-39B&D	Manual & N.C. Manual*
+ R-567	I.C. Closed Cooling System	9.2-7	6	IC-V3	3	Gate	6.2-39B	Manual
R-573 thru R-576	R.C. Pump Seal Water Supply	9.3-6	2,½,1½,3/4	**&MU-V330 & MU-V364	21	Globe	6.2-39A&D	AUTO & N.C. Manual*

* The N.C. Manual Barriers are employed on Isolation Valve Test Connections and Drain Lines

\+ The Isolation Valves for these penetrations will be served by a common, local seal water storage tank.

** The Isolation Valve Tag. No. will be supplied after the valves, which contain the environmental barrier, are purchased.

6.2-89

Am.28 (5-30-75)

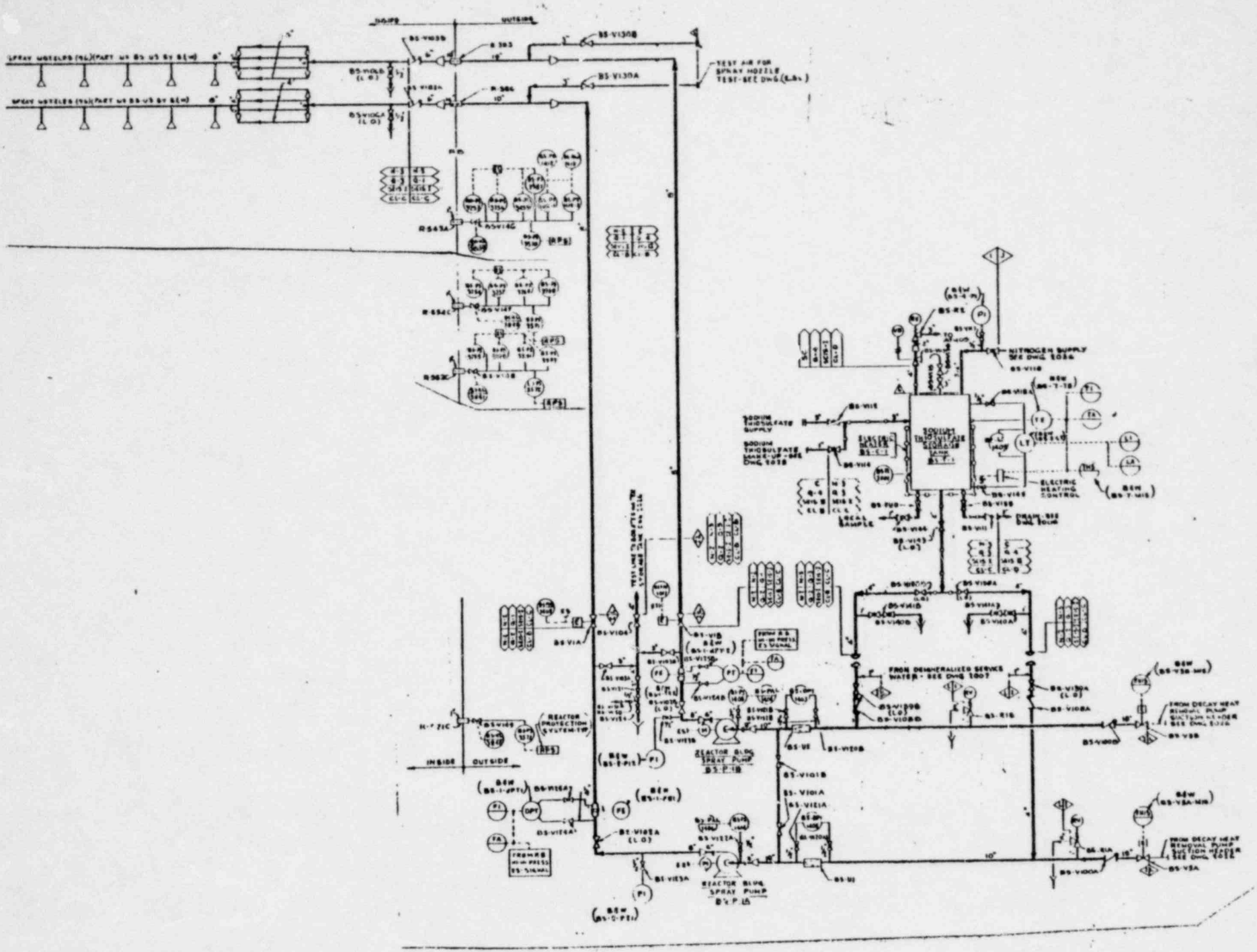
INSIDE
OUTSIDE
TEST AIR FOR SPRAY NOZZLE TEST - SEE DWG (B.&W.)
NITROGEN SUPPLY
SODIUM THIOSULFATE SUPPLY
ELECTRIC HEATING CONTROL
FROM DEMINERALIZED SERVICE WATER - SEE DWG 1007
FROM DECAY HEAT REMOVAL PUMP SUCTION HEADER
REACTOR BLDG SPRAY PUMP
REACTOR PROTECTION SYSTEM-TYP

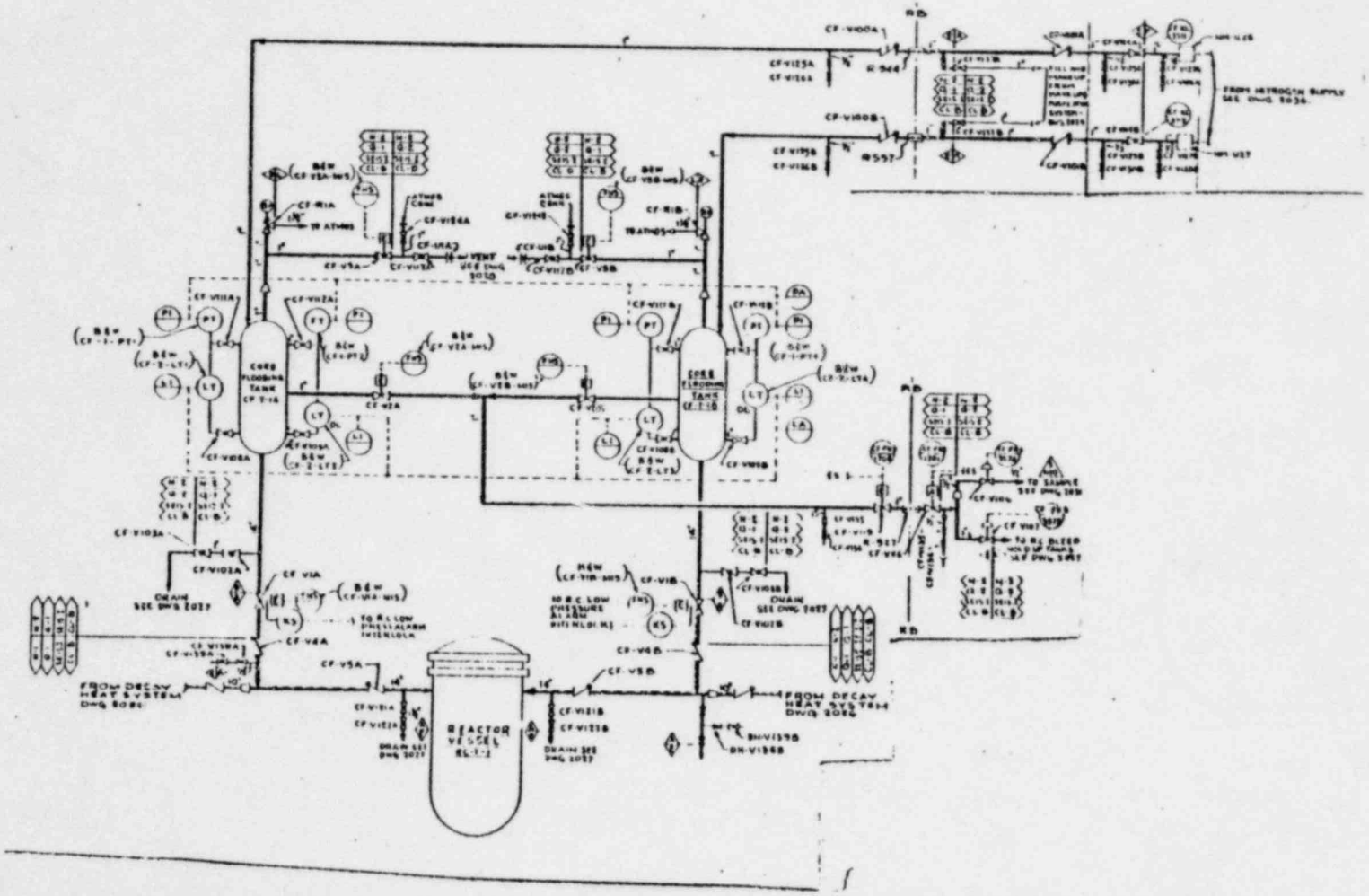
CORE FLOODING TANK
CORE FLOODING TANK
REACTOR VESSEL
FROM DECAY HEAT SYSTEM
FROM DECAY HEAT SYSTEM
FROM NITROGEN SUPPLY
TO SAMPLE
TO R.C. BLEED
TO R.C. LOW PRESSURE ALARM INTERLOCK
DRAIN
DRAIN
DRAIN
DRAIN
TO ATMOS
TO ATMOS
VENT

REACTOR COOLANT SAFETY INJECTION BLOCK DIAGRAM

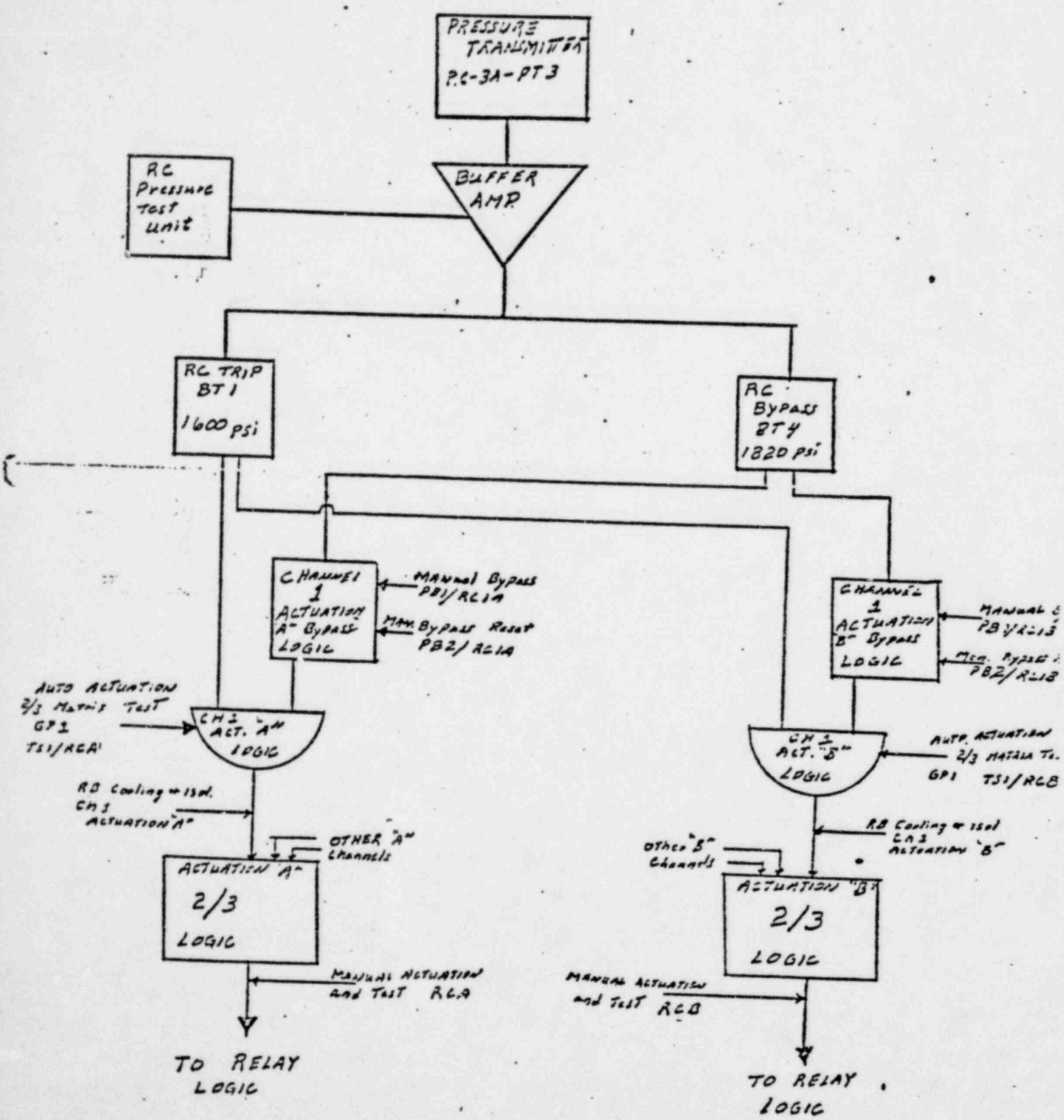

REACTOR BUILDING COOLING & ISOLATION

BLOCK DIAGRAM

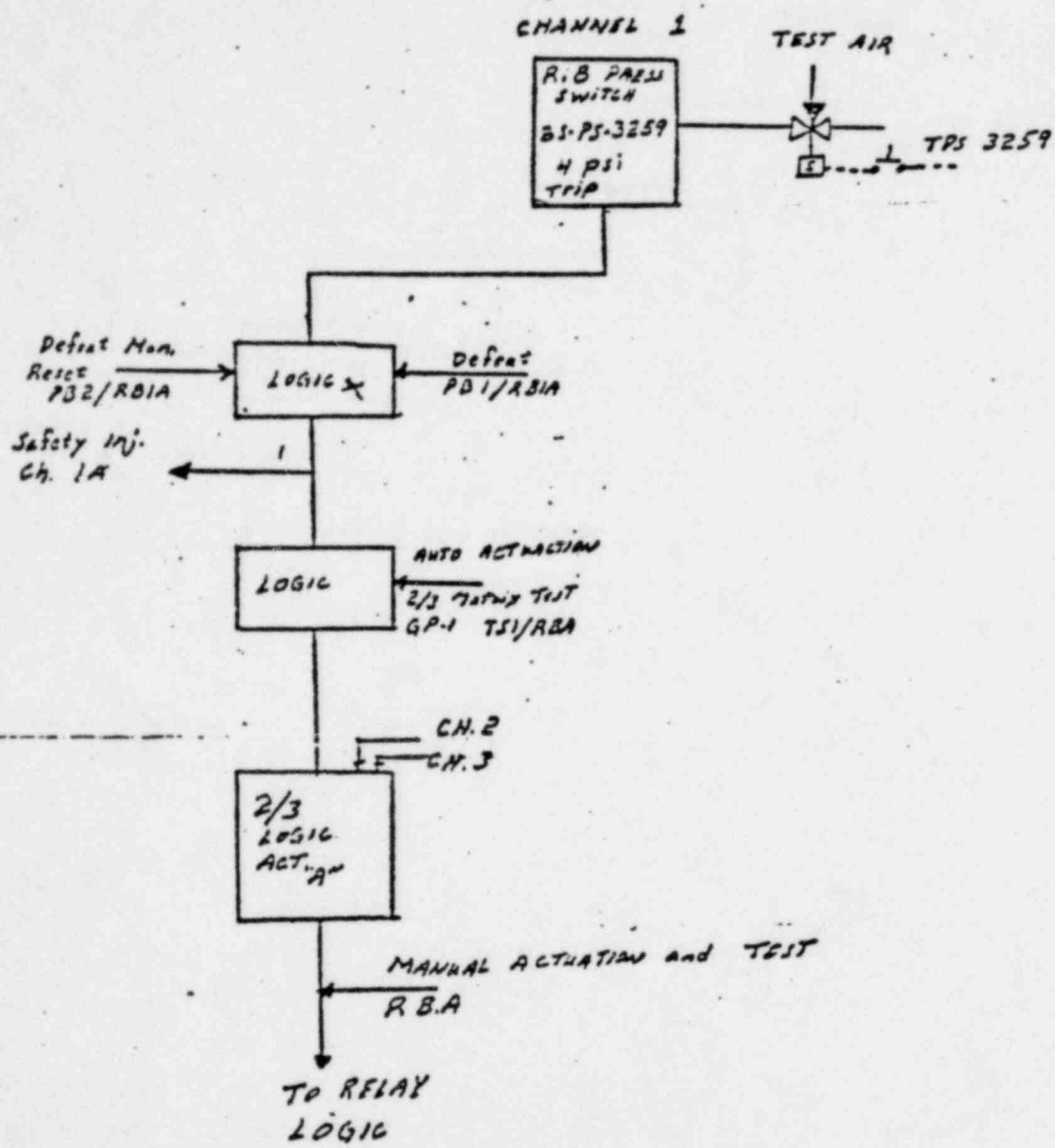

REACTOR BUILDING SPRAY ACTUATION "A" BLOCK DIAGRAM.

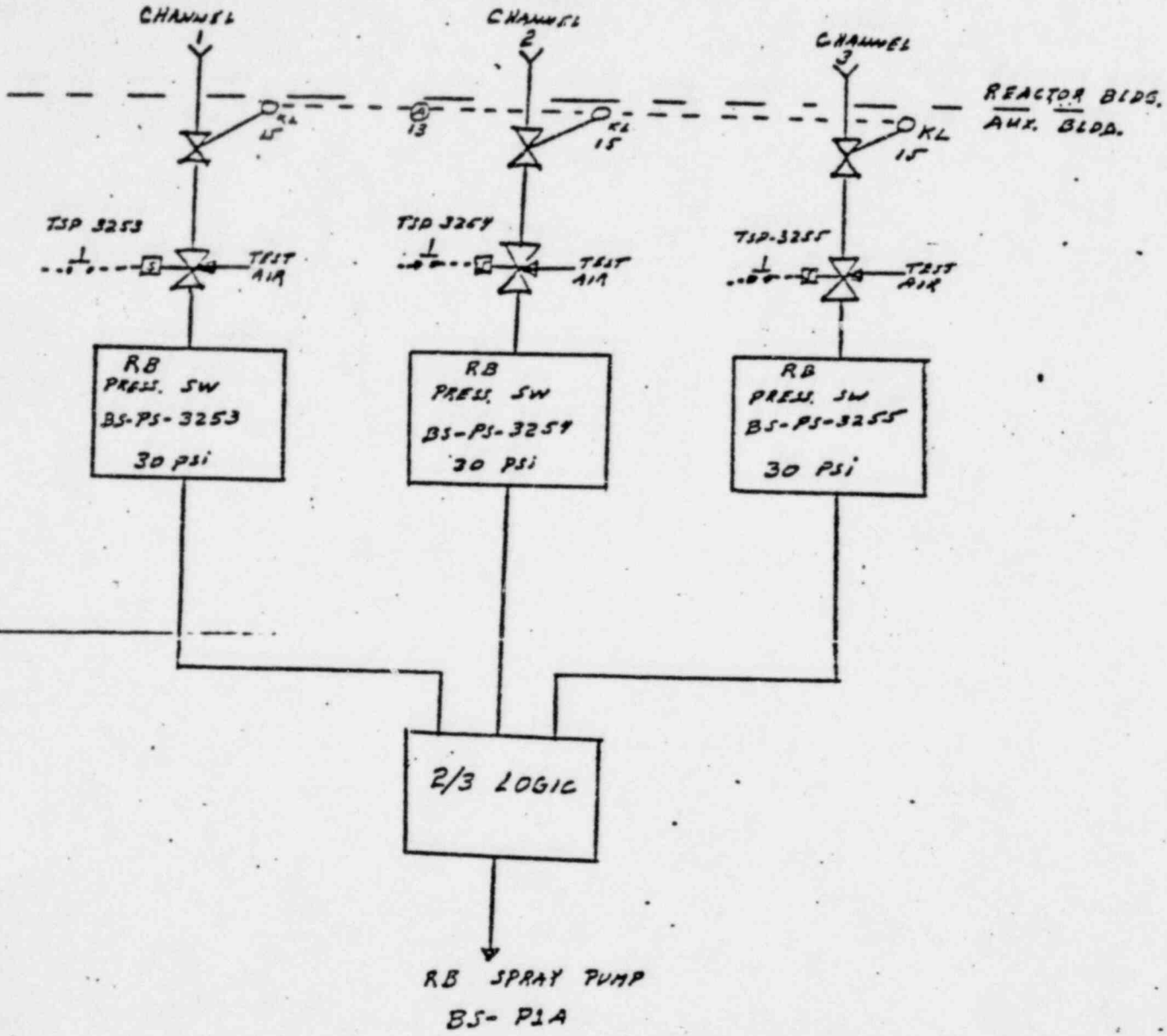

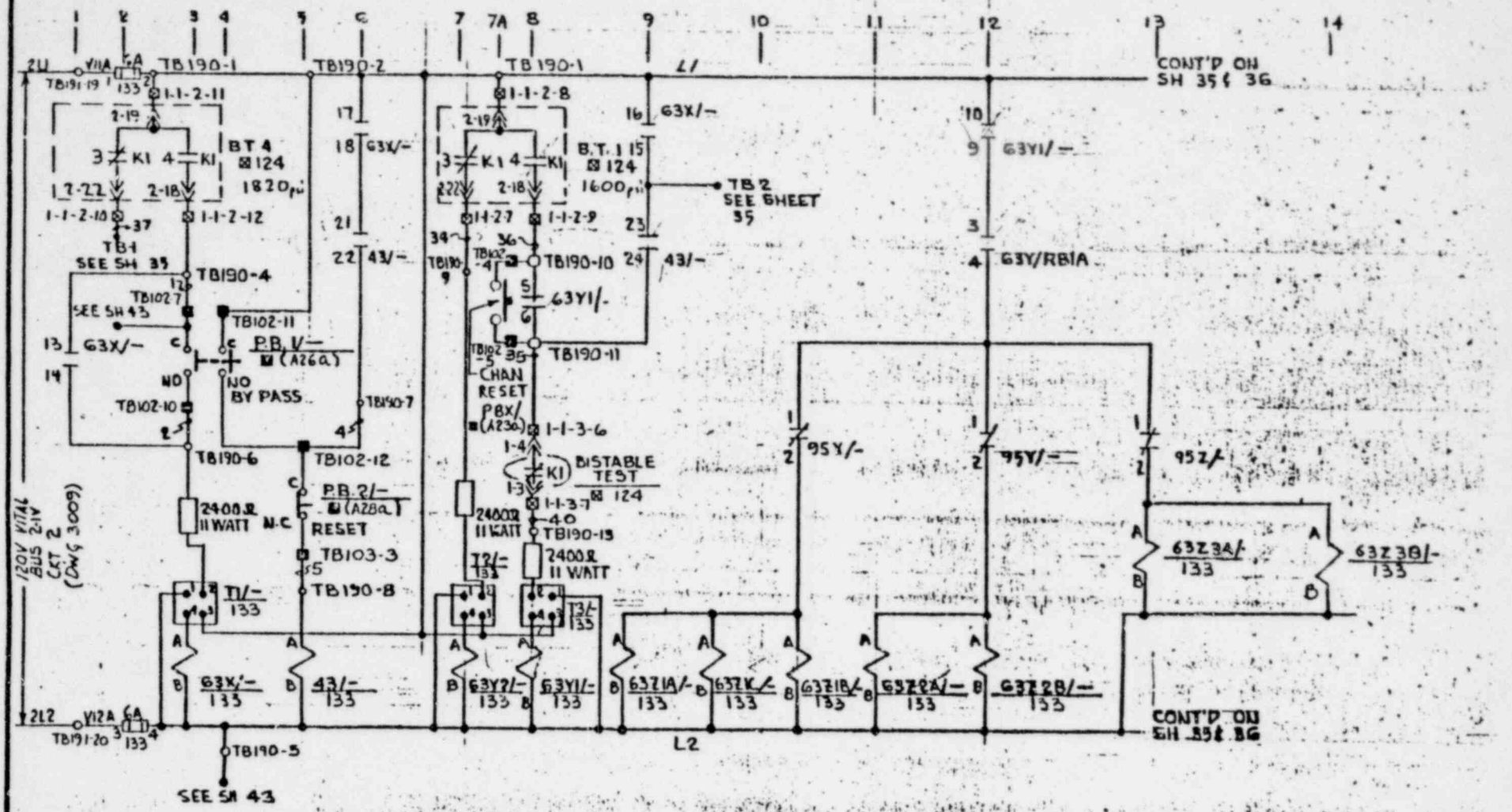

SAFETY FEATURE ACTUATION SYSTEM 'A'

SAFETY INJECTION - CHANNEL RCIA

APPROVED BY CLIENT

NOT REQ'D

ENG. DES.	ELEC. ENG.	MECH. ENG.	CIVIL ENG.		REV. NO.	REVISIONS	APP. BY CLIENT	BY	CHKD.	APP.	DATE
CLEARED BY					4	ADDED TERM NO., CONTACT NO., RELAY 63Z1C & RESISTORS CHANGED NOTE		JSC	RSG	NT	1-1-7

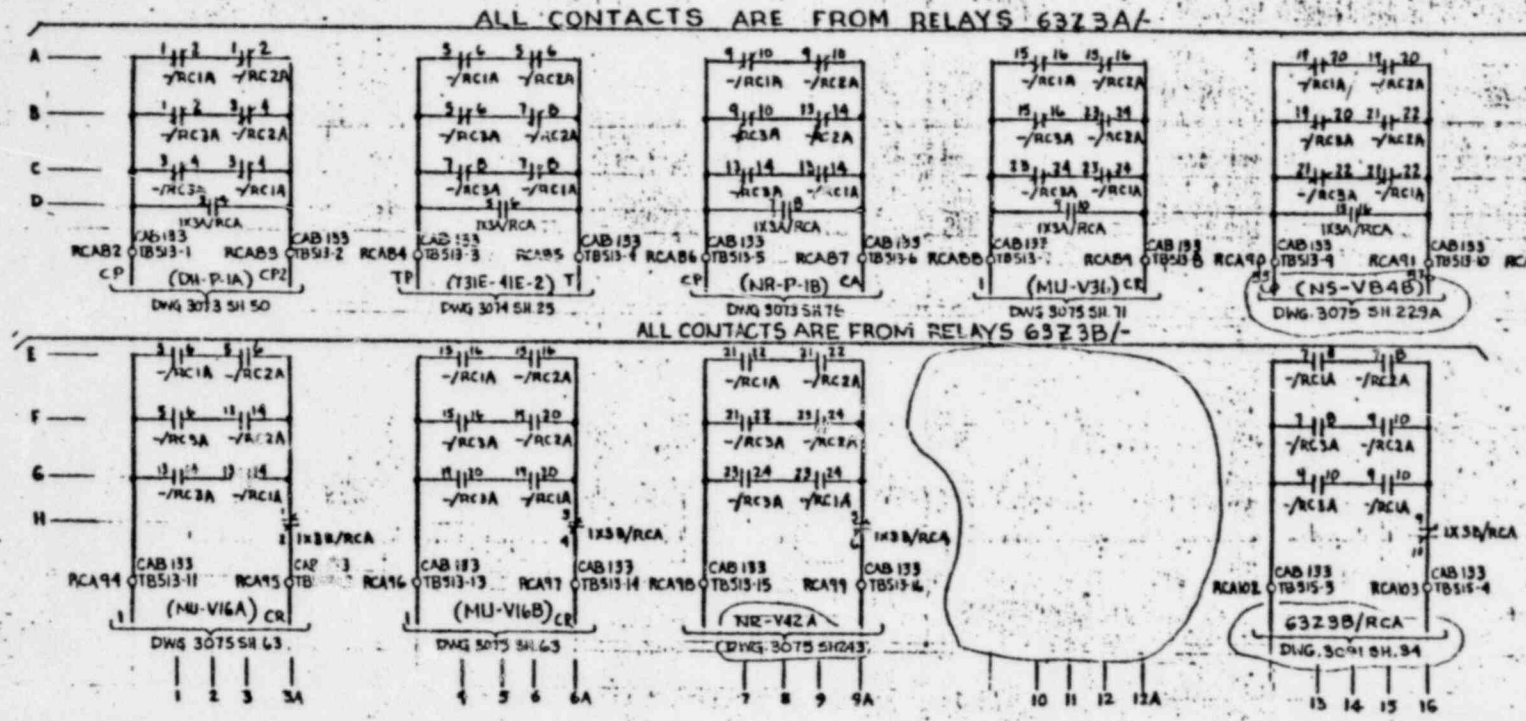

ENGINEERED SAFETY FEATURES
NUCLEAR SAFETY RELATED

SAFETY FEATURE - ACTUATION SYSTEM 'A'
SAFETY INJECTION - ACTUATION - GROUP 3

	ELEC. ENG.	MECH. ENG.	CIVIL ENG.		REV. NO.	REVISIONS	APP. BY CLIENT	BY	CHKD.	APP.	DATE
DRAWN BY	K. Sitzl				G	DELETED SPARE INPUT FROM RELAYS 63Z3A & 63Z3B AND CONTACT DH-P-1A. ADDED "ES" INPUT TO NS-V04B, NS-V42A, 63Z3B/RCA PER RCN 2011		A.T.L.	SSC		4/4/75
DATE	8-22-73										
CHK. BY	a a Villani for			P-22-72							

FOR PREVIOUS REVISIONS SEE MAC CARDS

APPROVED BY CLIENT
NOT REQD

BURNS AND ROE, INC.
ORADELL, N.J. HEMPSTEAD, N.Y. LOS ANGELES, CALIF.

SAFETY FEATURE ACTUATION SYSTEM 'A'
SAFETY INJECTION ACTUATION

JERSEY CENTRAL POWER & LIGHT CO.
THREE MILE ISLAND STATION — UNIT 2

DRAWN	GROUP LEADER	DATE	SCALE
SS	VS	8-22-72	—

APPROVED FOR CONSTRUCTION 2/24/72
ELECTRICAL ENGINEER

W. O. 2555

Dwg 3091 (SH 40) REV. G

FIG. 7B-24

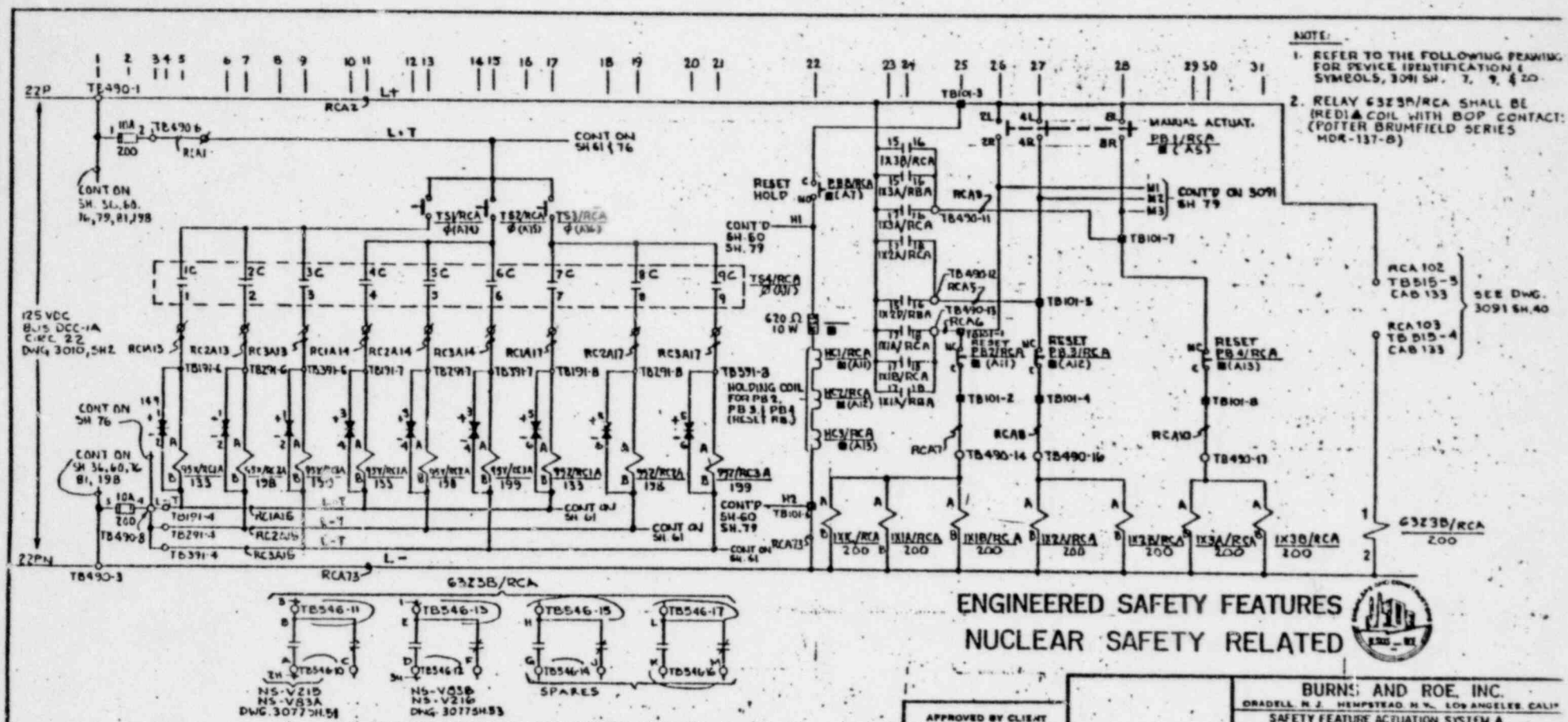
NOTE:
1. REFER TO THE FOLLOWING DRAWING FOR DEVICE IDENTIFICATION & SYMBOLS, 3091 SH. 7, 9, & 20.
2. RELAY 63Z3B/RCA SHALL BE (RED) COIL WITH BOP CONTACTS (POTTER BRUMFIELD SERIES MDR-137-8)
125 VDC BUS DCC-1A CIRC. 22 DWG. 3010, SH.2
22P
22PN
CONT ON SH. 36, 60, 76, 79, 81, 198
CONT ON SH 76
CONT ON SH 36, 60, 76, 81, 198
CONT'D ON SH 61 & 76
CONT'D ON SH 60 SH. 79
CONT'D ON 3091 SH 79
MANUAL ACTUAT. PB1/RCA (AS)
RESET HOLD
HOLDING COIL FOR PB2, PB3 & PB4 (RESET PB)
620 Ω 10 W
RESET PB2/RCA (A11)
RESET PB3/RCA (A12)
RESET PB4/RCA (A13)
RCA 102 TB515-5 CAB 133
RCA 103 TB515-4 CAB 133
SEE DWG. 3091 SH.40
63Z3B/RCA 200
63Z3B/RCA
NS-V21B NS-V83A DWG. 3077 SH.51
NS-V83B NS-V21A DWG. 3077 SH.53
SPARES
ENGINEERED SAFETY FEATURES
NUCLEAR SAFETY RELATED
SAFETY FEATURE-ACTUATION SYSTEM-A
SAFETY INJECTION TEST & MANUAL ACTUATION
APPROVED BY CLIENT
NOT REQ'D
BURNS AND ROE, INC.
SAFETY FEATURE ACTUATION SYSTEM A
SAFETY INJECTION TEST AND MAN ACTUATION
JERSEY CENTRAL POWER & LIGHT CO.
THREE MILE ISLAND STATION — UNIT 2
W. O. 2555
DWG 3091 SH 34
REVISIONS
ADDED TB. & TERM NO'S FOR 63Z3B/RCA CONTACTS PER PCN 2208 REV 1
FOR PREVIOUS REVISIONS SEE 'MAC' CARDS

FIG. 7B-18

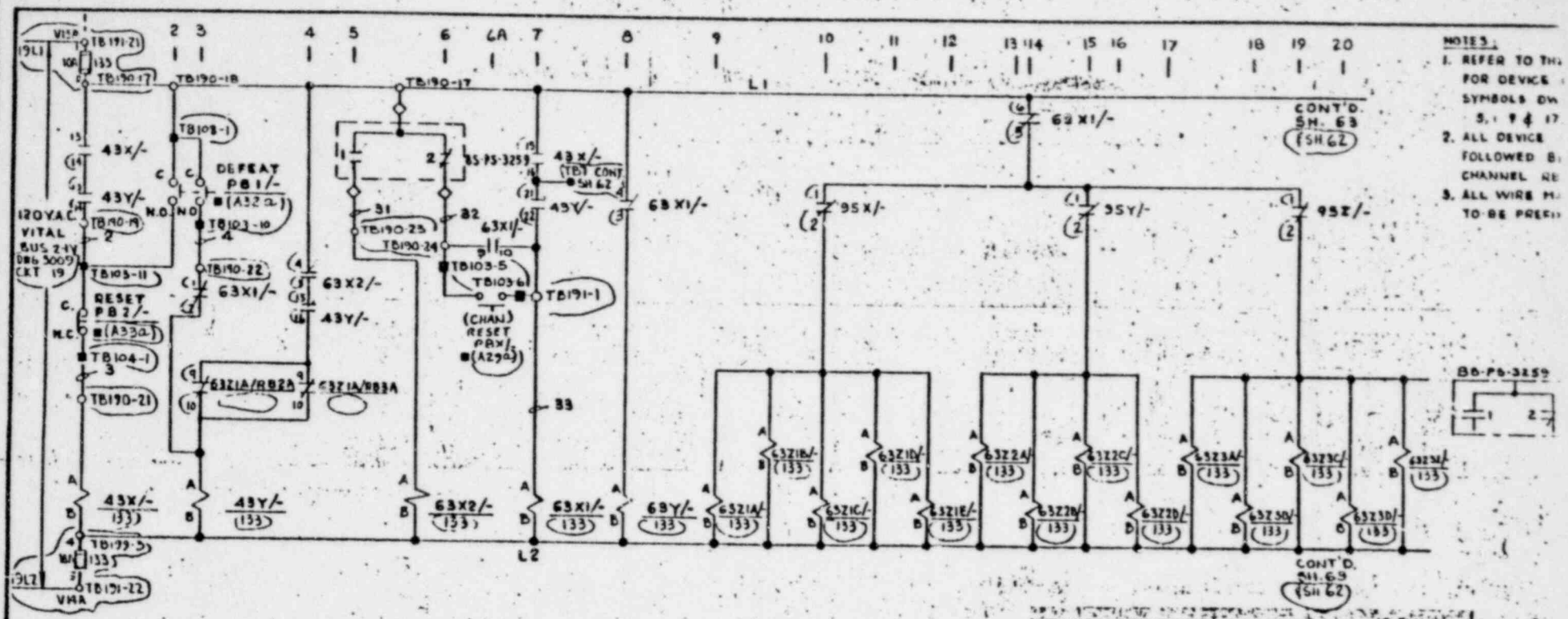

SAFETY FEATURE ACTUATION SYSTEM 'A'

R.B. ISOLATION & COOLING - CHANNEL RBIA

ENG. CHG.	ELEC. ENG.	MECH. ENG.	CIVIL ENG.		REV. NO.	REVISIONS	APP. BY	BY	CHKD.	APP.	DATE
CLEARED BY	KSF				1	ADDED CLIENTS DISPOSITION. ISSUED FOR CONSTRUCTION		SS	AO	KHS	8-22-72
DATE	8-22-72				2	ADDED TPS-3259 INFO, ADDED CKTS.		KF	NE		3-1-74
REV. BY ENG. UNITS				8-22-72	3	REV. LINES 5, 6, 6A, 7, ESF & NSA REVISION		LNM	RG		1-8-74
					4	ADD TERMINAL BLOCK CONNECTIONS & CHANGE ADD MISC OTHER CHANGES			RGS		

APPROVED BY CLIENT: NOT REQD

BURNS AND ROE
CRADELL, N.J. HEMPSTEAD, N.Y.
SAFETY FEATURE ACTUATION
RB ISOLATION & COOLING
JERSEY CENTRAL POWER
THREE MILE ISLAND STATION

DRAWN F.L. | TRACED | CHECKED KHS | SQUAD LEADER VS

APPROVED FOR CONSTRUCTION

CHIEF ELECTRICAL ENGINEER

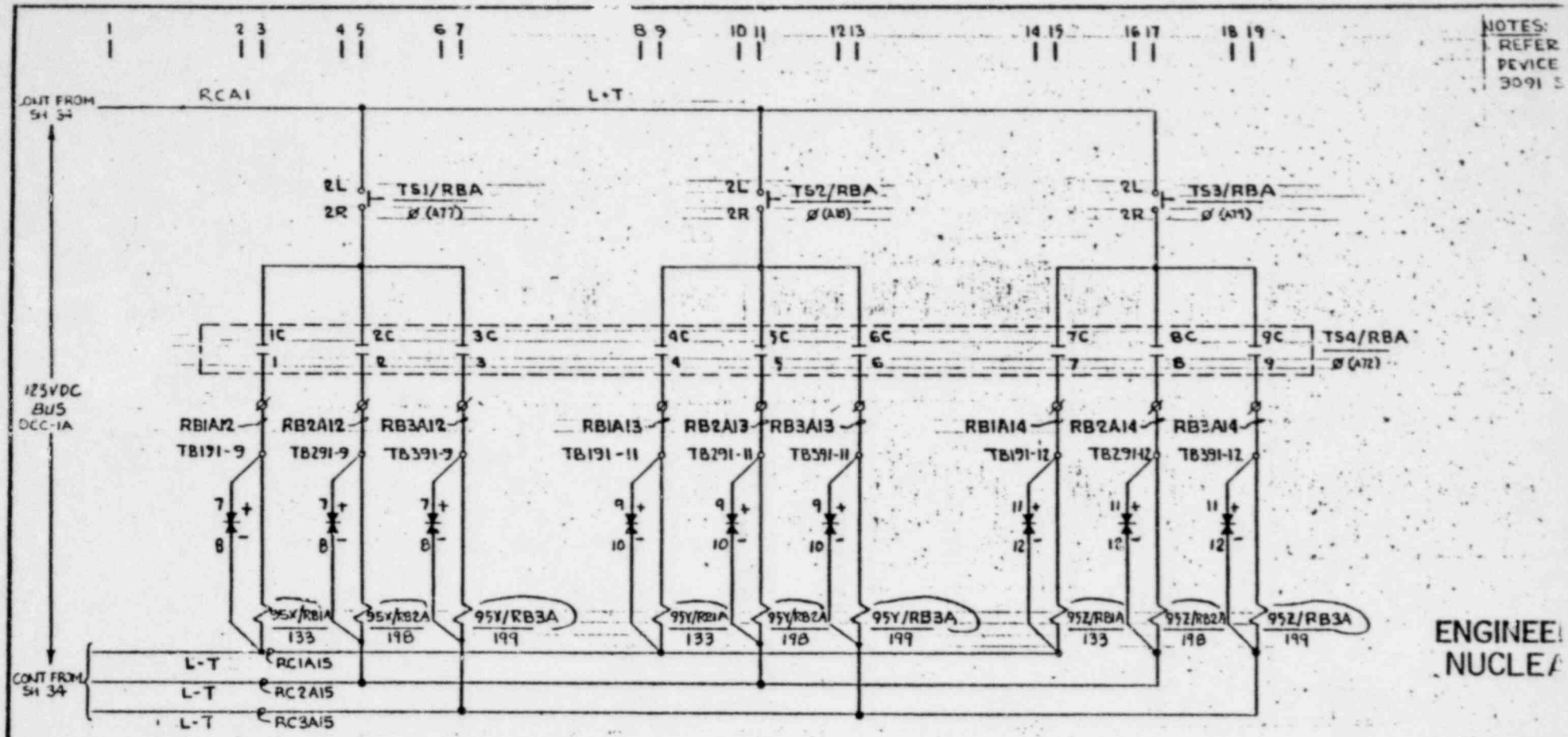

NOTES:
1. REFER
DEVICE
3091 S

ENGINEE
NUCLEA

SAFETY FEATURE ACTUATION SYSTEM 'A'
R.B. ISOLATION & COOLING TEST

APPROVED BY CLIENT
NOT REQ'D

ENG. DES.	ELEC. ENG.	MECH. ENG.	CIVIL ENG.		REV. NO.	REVISIONS	APP. BY CLIENT	BY	CHKD.	APP.	DATE
CLEARED BY	K Stull				4	REV. COIL TAG NO'S. AND WIRE NO. PER PCN #2116 SUPP #1	—	BT	SSC		12-1-75
DATE	8-22-72										
REV. BY CH. DRAFTS				8-22-72							

GRADE: SA
DRAWN
TRACED
CHECKED
CHIEF

FOR PREVIOUS REVISIONS SEE MAC CARDS

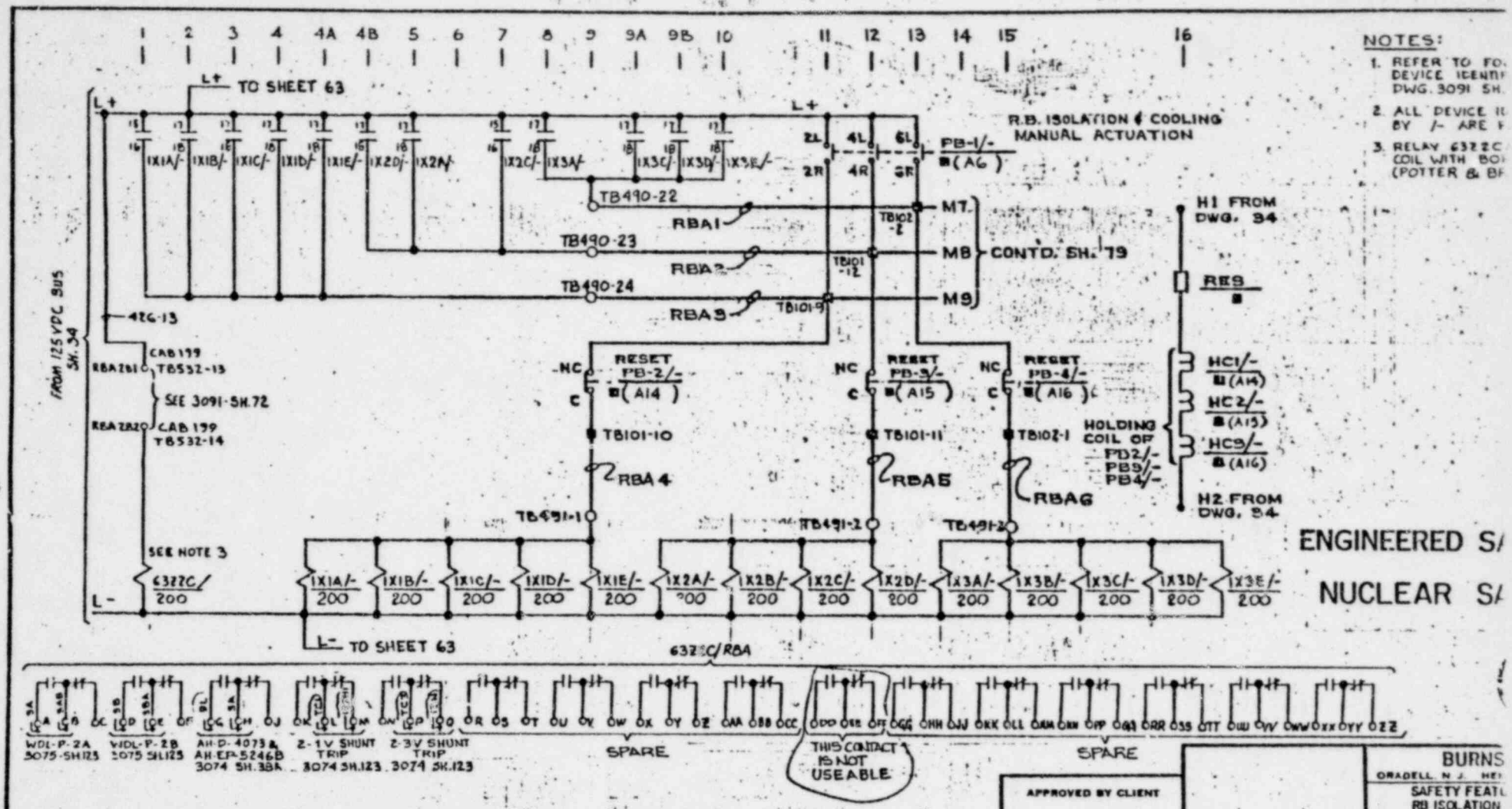
NOTES:
1. REFER TO FO DEVICE IDENTI DWG. 3091 SH.
2. ALL DEVICE II BY /- ARE F
3. RELAY 6322C COIL WITH BO (POTTER & BI
TO SHEET 63
R.B. ISOLATION & COOLING MANUAL ACTUATION
PB-1/- (A6)
TB490-22
TB490-23
TB490-24
RBA1
RBA2
RBA3
MT
MB
M9
CONTD. SH. 79
H1 FROM DWG. 34
RES
FROM 125 VDC BUS SH. 34
426-13
CAB 199 TB532-13
SEE 3091-SH.72
CAB 199 TB532-14
RESET PB-2/- (A14)
RESET PB-3/- (A15)
RESET PB-4/- (A16)
TB101-10
TB101-11
TB102-1
RBA 4
RBA5
RBA6
HC1/- (A14)
HC2/- (A15)
HC3/- (A16)
HOLDING COIL OF PD2/- PB3/- PB4/-
H2 FROM DWG. 34
TB491-1
TB491-2
TB491-3
SEE NOTE 3
6322C/200
L-
TO SHEET 63
6322C/RBA
WDL-P-2A 3075-SH.123
WDL-P-2B 3075 SH.123
AH-P-4073A AH-EP-5246B 3074 SH.38A
2-1V SHUNT TRIP 3074 SH.123
2-3V SHUNT TRIP 3074 SH.123
SPARE
THIS CONTACT IS NOT USEABLE
SPARE
APPROVED BY CLIENT
NOT REQ'D
SAFETY FEATURE ACTUATION SYSTEM 'A'
R.B. ISOLATION & COOLING MANUAL ACTUATION & TEST
ENGINEERED S
NUCLEAR S
BURNS
SAFETY FEAT
RB ISOLATION
JERSEY CE
THREE MILE
DRAWN A.P.
TRACED
CHECKED KHS
APPROVED FOR CO
ENG. DEP.
ELEC. ENG.
MECH. ENG.
CIVIL ENG.
CLEARED BY
DATE
REV. BY
REV. NO.
REVISIONS
APP. BY CLIENT
BY
CHKD.
APP.
DATE
8
ADDED WIRE NOS TO 6322C/RBA RELAY CONTACTS
ATL
SSC
9
REVISED CONTACTS PER PCN 2116 REV 2
S.I
SSC
FOR PREVIOUS REVISIONS SEE MAC CARD

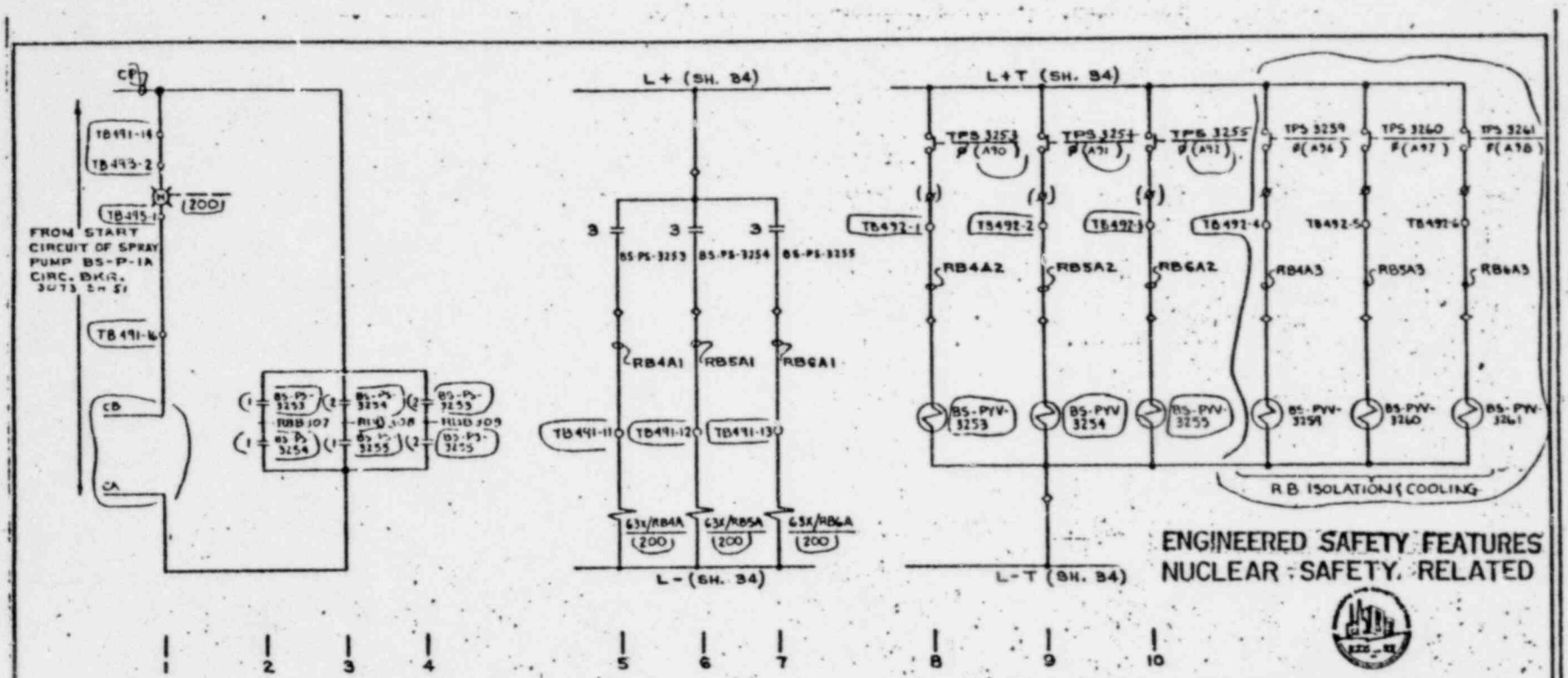

SAFETY FEATURE ACTUATION SYSTEM 'A'

R.B. SPRAY ACTUATION & TEST

(R.B. ISOLATION & COOLING AS NOTED)

APPROVED BY CLIENT: NOT REQ'D

BURNS AND ROE, INC.
ORADELL, N.J. HEMPSTEAD N.Y. LOS ANGELES CALIF.

SAFETY FEATURE ACTUATION SYSTEM 'A'
REAC BLDG SPRAY ACTUATION & TEST
JERSEY CENTRAL POWER & LIGHT CO.
THREE MILE ISLAND STATION — UNIT 2

DRAWN A.P. | DESIGN ENGINEER | DATE 8-22-71 | SCALE

APPROVED FOR CONSTRUCTION

CHIEF ELECTRICAL ENGINEER

W. O. 2553

Dwg 3091 SH 78 | 5

REV NO	REVISIONS	BY	CHKD	APP	DATE
5	ADDED TERM, SWITCH, SOLENOID AND CAB NO. ADDED ISOLATION & COOLING CIRCUIT, MISC OTHER CHANGES) PER PCN 1859 & 1905		RSG		9/1/71

FOR PREVIOUS REVISIONS SEE PRC. CARDS

FIG. 7B-47

L.O.P.

4.16KV SWGR ESF BUS 2-1E
EMERGENCY POWER LOAD SEQUENCE

OPERATING CONDITI

SYSTEM/ COMPONENT (1)	COLOR	ESACTUATION (2)	TIMING RELAY RELAY NO.	TIMING RELAY SETTING (SEC.)	NORMAL (3)	LOP (3)(4)	KW	POWER SUPPLY	ELECT. ELEM.
HVAC CONTROL RM									
AH-C-16A	R	23	1TK4A	6	RUN(1/2)	RUN(1/2)	12.40	2-12E	3074-38
AH-D4096A	R	23	—	—	OPEN	OPEN	0.03	2-12E	3074-38
AH-V 32A	R	23	—	—	OPEN	OPEN	0.03	2-12E	3074-38
AH-E35	R	23	—	—	RUN	RUN	6.20	2-12E	3074-40
AH-D4092G	R	23	—	—	SHUT	SHUT	0.03	2-12E	3074-40
AH-V125A	R	23	—	—	ENERG	ENERG	0.03	2-12E	3074-37
HVAC CABLE RM									
(6) AH-C-17A	R	31	1TK2	14	RUN(1/2)	RUN(1/2)	24.80	2-12E	3074-38A
AH-D4074A	R	31	—	—	OPEN	OPEN	0.03	2-12E	3074-38A
AH-V28A	R	31	—	—	OPEN	OPEN	0.03	2-12E	3074-38A
AH-E-20	R	31	—	—	RUN	RUN	12.40	2-12E	3074-40
AH-D4076	R	31	—	—	SHUT	SHUT	0.03	2-12E	3074-40
HVAC MECH EQUIP RM									—
(6) AH-C-19A	R	31	1TK3	14	RUN(1/2)	RUN(1/2)	16.60	2-12E	3074-80
AH-D4088A	R	11	—	—	OPEN	OPEN	0.03	2-12E	3074-80
NR-V85A	R	11	—	—	OPEN	OPEN	0.03	2-12E	3074-80
HEV DSL GEN BLDG									
AH-E-24A	R	11	—	—	AUTO	AUTO	4.20	2-11EC	3075-115
AH-D5027A	R	11	—	—	MODUL	MODUL	0.03	2-11EC	3075-115
AH-D5027B	R	11	—	—	MODUL	MODUL	0.03	2-11EC	3075-115
EMERGENCY DSL GEN									
DF-P-1A	R	11	—	—	AUTO	AUTO(1/2)	0.42	2-11EC	3075-37
DF-V-7A	R	11	—	—	AUTO	AUTO	0.03	2-11EC	3075-37
DF-P-1B	R	11	—	—	AUTO	AUTO(1/2)	0.42	2-11EC	3075-37
DF-V-7B	R	11	—	—	AUTO	AUTO	0.03	2-11EC	3075-37
EMERG. DSL GEN AUX	R	11	—	—	AUTO	AUTO	13.70		
SD-P-10A/B	R	11	—	—	AUTO	AUTO	8.40	2-11EC	3075-126
DF-P-2A/B	R	11	—	—	AUTO	AUTO	8.40	2-11EC	3075-47
EDWTR & CONDENSATE									
EF-P-2A	R	23	1TK1	6	STOP	RUN	373.00	2-1E	
(1) NUC. SERV. RIVER WATER									
NR-P-1A	R	27	—	—	RUN(1/2)	RUN(1/2)	332.00	2-3E	3073-75
NR-P-4A	R		—	—	RUN	(RUN)	2.50	2-31E	3074-106
NR-V164A	R		—	—	OPEN	(OPEN)	0.03	MP2-31E	3079-26
NR-V166A	R		—	—	SHUT	(SHUT)	0.03	MP2-31E	3079-26
NR-V2A	R		—	—	OPEN	(OPEN)	0.55	2-31E	3074-61
NR-P-1B	R	27	—	—	RUN (1/4)	RUN (1/2)	332.00	2-3E	3073-75
NR-P-4B	R		—	—	RUN	(RUN)	2.50	2-31E	3074-106
NR-V164B	R		—	—	OPEN	(OPEN)	0.03	MP2-31E	3079-26
NR-V166B	R		—	—	SHUT	(SHUT)	0.03	MP2-31E	3079-26
NR-V2B	R		—	—	OPEN	(OPEN)	0.55	2-31E	3074-61
NR-S-1A	R	11	—	—	AUTO	AUTO	0.63	2-31E	(—)
NR-V153A	R	11	—	—	OPEN	OPEN	0.03		(—)
NB-V137A	R	11	—	—	AUTO	AUTO	0.03	2-12E	3074-36
HVAC RIVER WTR P-HSE									
AH-C-20A	R	31	1TK4	14	RUN (1/2)	RUN(1/2)	12.70	2-31E	

ENG. DES.	ELEC. ENG.	MECH. ENG.	CIVIL ENG.		REV. NO.	REVISIONS
CLEARED BY	RWR				4	DELETED INSTRUMENT AIR-IA-P-1A & IA-Q-1. GE REVISION PER PCN # 2116-SUPPL. 2.
DATE	3-31-75					
REV. BY / CH. DRAFTS	RA Vi[illegible] / [illegible]		7-16-75			

FOR PREVIOUS REVISIONS SEE MAC CARDS.

L.O.P.

4.16KV SWGR ESF BUS 2-1E
EMERGENCY POWER LOAD SEQUENCE

ON AND KW LOAD

SYSTEM/ COMPONENT (1)	COLOR	ES ACTUATION		(2) TIMING RELAY RELAY NO.	(2) TIMING RELAY SETTING (SEC.)	NORMAL (3)	LOP (3)(4)	KW	POWER SUPPLY	ELECT. ELEM.
BATTERY SUPPLY										
RECT. 2-1A - 2-1D	R		11	—	—	ON	ON	140.00	2-12E	3010
NDCT LTG A	R		11	—	—	ON	ON		2-12E	3005
NDCT LTG B	R		11	—	—	ON	ON		2-12E	3005
MISC PWR PNL MP2-31E	R		11	—	—	ON	ON		2-31E	3017
SPACE HTR PNL	R		11	—	—	ON	ON		2-31E	
RAD MONITORING										
PWR PNL RMP-EA	R		11	—	—	ON	ON	12.50	2-11EA	3017-3
MISC PWR PNL MP2-11EB	R		11	—	—	ON	ON	11.30	2-11EB	3017-3
EMERG DSL GEN LTG PNL LP2-11EC	R		11	—	—	ON	ON	11.15	2-11EC	3017-3
MISC PWR PNL MP2-11EC	R		11	—	—	ON	ON	3.00	2-11EC	3017-3
RADWASTE DISPOSAL LIQ WDL-P-2A	R		11	—	—	AUTO(1/2)	AUTO(1/2)	6.20	2-32A	3075-123
CONT BLDG LTG										
PDP-1E	R		11	—	—	ON	ON	37.00	2-12E	3074-17A
LPC-1AE	R		11	—	—	ON	ON		2-12E	3074-17A
LPC-3AE	R		11	—	—	ON	ON		2-12E	3074-17A
LPC-5AE	R		11	—	—	ON	ON		2-12E	3074-17A
NUC. SVCE. CL. COOL. WTR.										
NS-P-1A	R		17		—	RUN(1/3)	RUN (2/3)	83.00	2-11EB	3075-66
NS-P-1C	R/G		22		—	RUN(1/3)	RUN (2/3)		2-11EB/2-21EB	3075-89
MAKE-UP & PURIFICATION										
MU-P-1A	R	15	15.5	—	2.5	RUN(1/3)	RUN(1/3)	270	2-1E	3073-48
AUX GEAR LUBE OIL PP	R	15	11	—	—	RUN	RUN	0.83	2-11EA	3075-195
MAIN BRG LUBE OIL PP	R	15	11	—	—	RUN	RUN	0.42	2-11EA	3075-196
AUX BRG LUBE OIL PP	R	15	11	—	—	RUN	RUN	0.42	2-11EA	3073-197
MU-P-1B	R/G	17	14	—	3	RUN (1/3)	RUN (1/3)	270	2-1E	3073-49
AUX GEAR LUBE OIL PP	R/G	17	11	—	—	RUN/RUN	RUN/RUN	0.83	2-11EA/21EA	3075-192
MAIN BRG LUBE OIL PP	R/G	17	11	—	—	RUN/RUN	RUN/RUN	0.42	2-11EA/21EA	3075-193
AUX BRG LUBE OIL PP	R/G	17	11	—	—	RUN/RUN	RUN/RUN	0.42	2-11EA/21EA	3075-194

NUCLEAR SAFETY RELATED
ENGINEERED SAFETY FEATURES

CONTINUED ON SH. 6OB
FOR NOTES SEE SH. 6OC

	APP. BY CLIENT	BY	CHKD.	APP.	DATE
NERAL	—	67	SSC	[illegible]	2 10 76

APPROVED BY CLIENT: not required

BURNS AND ROE, INC.
ORADELL, N.J. HEMPSTEAD, N.Y. LOS ANGELES, CALIF.

4.16 KV SWGR ESF BUS 2-1E EMERG. POWER LOAD SEQUENCE

JERSEY CENTRAL POWER & LIGHT CO.
THREE MILE ISLAND STATION — UNIT 2

DRAWN	SQUAD LEADER	DATE	SCALE
TRACED			
CHECKED ACE		2-14-75	

APPROVED FOR CONSTRUCTION
R.K.V. Rebbapragada
VP/CHIEF ELECTRICAL ENGINEER

W. O. 2555

Dwg. 3073 SH 6OA REV. 4

ES & LOP

4.16KV SWGR ESF BUS 2-1E
EMERGENCY POWER LOAD SEQUENCE

SYSTEM / COMPONENT (1)	COLOR	ES ACTUATION TIMING (2)	RELAY NO.	SETTING (SEC)	OPERATING COND (3) NORMAL	(3) LOCA	KW	POWER SUPPLY	ELECT. ELEM.
HVAC CONTROL RM									
AH-E-4A	R	17	ITK6	6	STOP	RUN(1/2)	33.20	2-12E	3074-37
AH-D4091A	R				SHUT	OPEN	0.03	2-12E	3074-37
AH-V124A	R				ENERG	DE-ENER	0.03	2-12E	3074-37
AH-C-16A	R	17	ITK10	6	RUN	RUN	12.40	2-12E	3074-36
AH-D4093A	R				OPEN	OPEN	0.03	2-12E	3074-36
AH-V132A	R				OPEN	OPEN	0.03	2-12E	3074-36
AH-E35	R				RUN	RUN	6.20	2-12E	3074-40
AH-D4092G	R				SHUT	SHUT	0.03	2-12E	3074-40
HVAC CABLE RM									
(6) AH-C-17A	R	25	ITK20	14	RUN (1/2)	RUN (1/2)	24.80	2-12E	3074-38A
AH-D4074A	R				OPEN	OPEN	0.03	2-12E	3074-38A
AH-V26A	R				OPEN	OPEN	0.03	2-12E	3074-38A
AH-E-20	R	25			RUN	RUN	12.40	2-12E	3074-40
AH-D4076	R				SHUT	SHUT	0.03	2-12E	3074-40
HVAC MECH EQUIP RM									
(6) AH-C-19A	R	25	ITK7	14	RUN(1/2)	RUN (1/2)	16.60	2-12E	3074-60
AH-D4058A	R	11			OPEN	OPEN	0.03	2-12E	3074-60
NR-V65A	R	11			OPEN	OPEN	0.03	2-12E	3074-60
HEV DSL GEN BLDG									
AH-E-24A	R	11	—		AUTO	AUTO	4.20	2-11EC	3075-115
AH-D5027A	R				MODUL	MODUL	0.03	2-11EC	3075-115
AH-D5027B	R				MODUL	MODUL	0.03	2-11EC	3075-115
REAC BLDG SPRAY									
BS-V1A	R	11	—		CLOSE	OPEN	2.16	2-11EA	3075-64
BS-V4A	R	11	—		CLOSE	OPEN	0.26	2-11EA	3075-72
NUCLEAR SAMPLING									
CA-V4A	R	11	—		OPEN	CLOSE	0.11	2-11EA	3075-67
CORE FLOODING									
CF-V1A	R	11	—		OPEN	OPEN	8.70	2-11EB	3075-50
EMERG DSL GEN									
DF-P-1A	R	11	—		AUTO	AUTO(1/2)	0.42	2-11EC	3075-37
DF-V7A	R	11			AUTO	AUTO	0.03	2-11EC	3075-37
DF-P-1B	R	11	—		AUTO	AUTO(1/2)	0.42	2-11EC	3075-37
DF-V7B	R	11			AUTO	AUTO	0.03	2-11EC	3075-37
EMERG DSL GEN AUX	R	11	—		ON	ON	13.70	2-21EC	( )
SO-P-10A/B	R	11	—		AUTO	AUTO	8.40	2-11EC	3075-126
DF-P-2A/B	R	11	—		AUTO	AUTO	8.40	2-11EC	3075-47
DECAY HEAT REMOVAL									
DH-V4A	R	11	—		SHUT	OPEN	10.60	2-11EA	3075-65
DH-V5A	R	11	—		SHUT	OPEN	4.40	2-11EA	3075-69
DH-V8A	R	11	—		SHUT	OPEN	0.27	2-11EA	3075-139
DH-V100A	R	11	—		SHUT	SHUT	1.33	2-11EA	3075-142
DH-V102A	R	11	—		OPEN	OPEN	2.16	2-11EA	3075-139
HVAC RIVER WTR P-HSE									
AH-C-20A	R	25	ITK8	14	RUN	RUN	12.70	2-31E	

ENG. DES.	ELEC. ENG	MECH ENG	CIVIL ENG		REV. NO.	REVISIONS
CLEARED BY	RWR				1	ADDED CLIENT'S DISPOSITION, ISSUED FOR CONSTRUCTION
DATE	8-31-75				2	DELETED INSTRUMENT AIR-IA-P-1A & IA-Q-1. MINOR REP. PCN # 2116-SUPPL. 2.
REV. BY / CH. DRAFTS	A.A. Vi Hau / [illegible]			9-16-75		

4.16KV SWGR ESF BUS 2-1E
EMERGENCY POWER LOAD SEQUENCE

ITION & KW LOADS

SYSTEM / COMPONENT (1)	COLOR	ES ACTUATION (2)	TIMING RELAY%	NORMAL (3)	LOCA (3)	KW	POWER SUPPLY	ELECT ELEM.
INTMD CL COOL WTR								
IC-V2	R	11	—	OPEN	SHUT	0.50	2-11EA	3075-103
MAKE-UP & PURIF								
(5) MU-V16A (16B)	R	11	—	SHUT	OPEN	2.64	(2-11EA)	3075-68
MU-V8G	R	11		MANUAL	SHUT	0.28	2-11EA	3075-71
MU-V2A & 2B	R	11		OPEN	SHUT	2.20	2-11EA	3075-
(1) NUC SVCE RIVER WTR								
NR-P-1A	R	21	—	RUN (1/2)	RUN (1/2)	332.00	2-3E	3073-75
NR-P-4B	R			RUN	RUN	2.50	2-31E	3074-106
NR-V184A	R			OPEN	OPEN	0.03	MP2-31E	3079-26
NR-V186A	R			SHUT	SHUT	0.03	MP2-31E	3079-26
NR-V2A	R			OPEN	OPEN	0.85	2-31E	3074-61
NR-P1B	R	21	—	RUN (1/4)	RUN (1/2)	332.00	2-3E	3073-75
NR-P4B	R			RUN	RUN	2.50	2-31E	3074-106
NR-V184B	R			OPEN	OPEN	0.03	MP2-31E	3079-26
NR-V186B	R			SHUT	SHUT	0.03	MP2-31E	3079-26
NR-V2B	R			OPEN	OPEN	0.85	2-31E	3074-61
NR-V40A	R	11	—	SHUT	OPEN	0.65	2-11EA	3075-94
NR-V51A	R	11	—	OPEN	SHUT	0.11	2-11EA	3075-26
NR-S-1A	R	11	—	AUTO	AUTO	0.63	2-31E	( )
NR-V153A	R	11	—	OPEN	OPEN		( )	( )
CONTROL BLDG LTG								
PDP-1E	R	11	—	ON	ON	37.00	2-12E	3074-17A
LPC-1AE	R	11	—	ON	ON		2-12E	3074-17A
LPC-3AE	R	11	—	ON	ON		2-12E	3074-17A
LPC-5AE	R	11	—	ON	ON		2-12E	3074-17A
BATTERY SUPPLY								
RECT 2-1A - 2-1D	R	11	—	ON	ON	140.00	2-12E	3010
NAT DRAFT COOL TWR LTG A	R	11	—	ON	ON		2-12E	3005
NAT DRAFT COOL TWR LTG B	R	11	—	ON	ON		2-12E	3005
MISC PWR PNL MP2-31E	R	11	—	ON	ON		2-31E	3017
SPACE HTR PNL	R	11	—	ON	ON		2-31E	

NUCLEAR SAFETY RELATED
ENGINEERED SAFETY FEATURES

FOR CONTINUATION AND NOTES SEE SH 60C

APPROVED BY CLIENT

not required

	APP. BY CLIENT	BY	CHKD.	APP.	DATE
PCN #1905			ADB		1/31/77
REVISION —	—	87	SSC		2-10-76

BURNS AND ROE, INC.
ORADELL, N.J. HEMPSTEAD, N.Y. LOS ANGELES, CALIF.

4.16KV SWGR ESF BUS 2-1E
EMERGENCY POWER LOAD SEQUENCE

JERSEY CENTRAL POWER & LIGHT CO.
THREE MILE ISLAND STATION — UNIT 2

DRAWN	SQUAD LEADER	DATE	SCALE
TRACED			
CHECKED ADB		2-14-75	

APPROVED FOR CONSTRUCTION
R.K. Robiadragada
for CHIEF ELECTRICAL ENGINEER

W. O. 2555
Dwg. 3073 SH60B REV 2

ES & LOP

4.16KV SWGR ESF BUS 2-1E
EMERGENCY POWER LOAD SEQUENCE

OPERATING CON

SYSTEM / COMPONENT (1)	ES ACTUATION COLOR (2)		TIMING RELAY NO.	SETTING (SEC.)	NORMAL (3)	LOCA (3)	KW	POWER SUPPLY	ELECT. ELEM.
RAD MONITORING									
PWR PNL RMP-2A	R	11	—	—	ON	ON	12.5	2-11EA	3017.3
MISC PWR PNL MP2-11EB	R	11	—	—	ON	ON	11.50	2-11EB	3017.3
EMERG DSL GEN LTG PNL LP2-11EC	R	11	—	—	ON	ON	11.75	2-11EC	3017.3
MISC PWR PNL MP2-11EC	R	11	—	—	ON	ON	3.00	2-11EC	3017.3
REAC BLDG EMERG COOL									
RR-V5A	R	11	—	—	MANUAL	OPEN	0.83	2-11EA	3075-54
RR-V5B	R	11	—	—	MANUAL	OPEN	0.83	2-11EA	3075-54
RR-V5C	R	11	—	—	MANUAL	OPEN	0.83	2-11EA	3075-54
RR-V2A	R	11	—	—	SHUT	OPEN	0.55	2-11EA	3075-97
RR-V2B	R	11	—	—	SHUT	OPEN	0.55	2-11EA	3075-97
NUC SVCE CL COOL WTR									
NS-P-1A	R	11	—	—	RUN (2/3)	RUN (2/3)	85.00	2-11EB	3075-66
NS-P-1C	R	16	—	—	RUN (2/3)	RUN (2/3)		2-11EB	3075-69
MAKE-UP & PURIF									
MU-P-1A	R	13.5	—	2.5	RUN (1/3)	RUN (2/3)	270.00	2-1E	3073-48
AUX GEAR LUBE OIL PP	R	11	—	—	RUN	RUN	0.83	MCC2-11EA	3075-195
MAIN BRG LUBE OIL PP	R	11	—	—	RUN	RUN	0.42	MCC2-11EA	3075-196
AUX BRG LUBE OIL PP	R	11	—	—	RUN	RUN	0.42	MCC2-11EA	3075-197
MU-P-1B	R/G	14	—	3	RUN (1/3)	RUN (2/3)	270.00	2-1E/2-2E	3073-70A
AUX GEAR LUBE OIL PP	R	11	—	—	RUN/RUN	RUN/RUN	0.83	MCC2-11EA/21EA	3075-192
MAIN BRG LUBE OIL PP	R	11	—	—	RUN/RUN	RUN/RUN	0.42	MCC2-11EA/21EA	3075-193
AUX BRG LUBE OIL PP	R	11	—	—	RUN/RUN	RUN/RUN	0.42	MCC2-11EA/21EA	3075-194
DECAY HT CL COOL WTR									
DC-P-1A	R	17	ITK9	6	STOP (2/2)	RUN	62.00	2-11EB	3075-87
DECAY HT REMOVAL									
DH-P-1A	R	11	—	—	OFF	RUN	290.00	2-1E	3073-50
REAC BLDG SPRAY									
BS-P-1A	R	25	ITK11	14	STOP	RUN	207.00	2-1E	3073-51
REAC BLDG VENT & PURGE									
AH-E-11C	R/G	27	ITK12	16	RUN (3/5)	RUN		2-11E/2-21E	3074-45B
AH-E-11A	R	25	ITK13	14	RUN (3/5)	RUN	62.90	2-11E	3074-45
AH-E-11B	R	27	ITK14	16	RUN (3/5)	RUN	62.90	2-11E	3074-45A
HVAC CONTROL RM									
AH-P-1A	R	100	ITK15	89	MANUAL	RUN	6.50	2-12E	3074-53
AR-V144A	R					OPEN	0.03	2-12E	3074-53
AH-C-6A	R	100	ITK16	89	MANUAL	RUN	110.00	2-12E	3071-4
NUC SVCE RIVER WTR									
NR-P-2A	R	100	ITK17	89	RUN (1/2)	RUN (2/2)	55.20	2-12E	3074-81
REAC BLDG EMERG COOL									
RS-P-1A	R	100	ITK18	89	STOP	RUN (2/4)	198.00	2-11E	3074-72
RS-P-1B	R	100	ITK19	89	STOP	RUN (2/4)	166.00	2-11E	3074-72
FDWTR & CONDENSATE									
EF-P-2A	R	17	ITK5	6	STOP	RUN	373.00	2-1E	

ENG. DEPT.	ELEC. ENG	MECH. ENG	CIVIL ENG.		REV NO	REVISIONS
CLEARED BY	[illegible]				4	[illegible]
DATE	5 31 73					
[illegible]	[illegible]					

FOR PREVIOUS REVISIONS SEE MAC CARDS

4.16KV SWGR ESF BUS 2-1E
EMERGENCY POWER LOAD SEQUENCE

DITION & KW LOADS

NUCLEAR SAFETY RELATED ENGINEERED SAFETY FEATURES

NOTES:

1. SYSTEM SUBCOMPONENTS LISTED UNDER MAIN SYSTEM COMPONENTS ARE INTERLOCKED TO OPERATE WITH THE MAIN SYSTEM COMPONENT E.G. NR-P-4B STARTS WHEN EITHER NR-P-1A OR 1B RECEIVES A START SIGNAL

2. ES ACTUATION:
   1. HIGH PRESSURE INJECTION - 1500 ES REAC COOL PRESS
   2. REAC BLDG ISOLATION & COOL - 4 DB REAC BLDG PRESS
   3. REACTOR BUILDING SPRAY - 30 DB REAC BLDG PRESS

   NUMBERS UNDER ONE OR MORE OF THESE COLUMNS INDICATED TIME IN SECONDS AFTER A LOCA AT WHICH THE ASSOCIATED COMPONENT RECEIVES AN ES ACTUATION SIGNAL

3. THE FRACTION FOLLOWING THE OPERATING STATUS INDICATES HOW MANY COMPONENTS OUT OF THE TOTAL NUMBER OF COMPONENTS IN THE SYSTEM ARE REQUIRED TO OPERATE E.G. NR-P-1A - RUN 1-4 MEANS ONLY ONE PUMP IS REQUIRED FOR NORMAL OPERATION

4. THE NUMBER PRECEDING THE OPERATING STATUS IS THE TIME IN SECONDS AFTER A LOP AT WHICH THE ASSOCIATED COMPONENTS RECEIVE AN ACTUATION FROM THE LOP LOADING SEQUENCE

5. LOADING OF THESE COMPONENTS DURING LOCA IS NOT CRITICAL AND THEY MAY BE ACTUATED LATER IN THE LOADING SEQUENCE OR MANUALLY ACTIVATED AS MAY BE DETERMINED BY FURTHER STUDY

CONTINUED FROM 6H.GOB

APPROVED BY CLIENT

not required

	APP BY CLIENT	BY	CHKD	APP.	DATE

BURNS AND ROE, INC.
ORADELL, N.J. HEMPSTEAD, N.Y. LOS ANGELES, CALIF.

4.16 KV SWGR ESF BUS 2-1E
EMERG POWER LOAD SEQUENCE

JERSEY CENTRAL POWER & LIGHT CO.
THREE MILE ISLAND STATION — UNIT 2

DRAWN & NOTED / TRACED / CHECKED	SQUAD LEADER	DATE	SCALE
		2-18-75	~

APPROVED FOR CONSTRUCTION
R K V Robbins
CHIEF ELECTRICAL ENGINEER

W. O. 2555

DWG 3073 SH.6OC REV 1

L.O.P.

4.16 KV SWGR ESF BUS 2-2E
EMERG POWER LOAD SEQUENCE

OPERATING CO

SYSTEM / COMPONENT (1)	COLOR	ES ACTUATION (2)	KW	NORMAL (3)	LOP (3)	TIMING RELAY NO.	TIMING RELAY SETTING (SEC)	POWER SUPPLY	ELECT. ELEM.
HVAC CONTROL RM									
AH-C-16B	G	23	12.40	RUN (1/2)	RUN (1/2)	ZTK4A	6	2-22E	3074-36
AH-D4096B	G		0.03	OPEN	OPEN			2-22E	3074-36
AH-V32B	G		0.03	OPEN	OPEN			2-22E	3074-36
HVAC CABLE RM									
AH-C-17B	G	31	24.80	RUN (1/2)	RUN (1/2)	ZTK2	14	2-22E	3074-36A
AH-D4074B	G		0.03	OPEN	OPEN			2-22E	3074-36A
AH-V25B	G		0.03	OPEN	OPEN			2-22E	3074-36A
HVAC MECH EQUIP RM									
AH-C-19B	G	31	16.60	RUN (1/2)	RUN (1/2)	ZTK3	14	2-22E	3074-60
AH-D4055B	G		0.03	OPEN	OPEN			2-22E	3074-60
NR-V65B	G		0.03	OPEN	OPEN			2-22E	3074-60
H&V DSL GEN BLDG									
AH-E-24B	G	11	4.20	AUTO	AUTO	—	—	2-21EC	3075-115
AH-D5031A	G		0.03	MODUL	MODUL			2-21EC	3075-115
AH-D5031B	G		0.03	MODUL	MODUL			2-21EC	3075-115
EMERG DSL GEN									
DF-P-1C	G	11	4.20	AUTO	AUTO (1/2)	—	—	2-21EC	3075-37A
DF-V7C	G	11	0.03	AUTO	AUTO			2-21EC	3075-37A
DF-P-1D	G	11	4.20	AUTO	AUTO (1/2)			2-21EC	3075-37A
DF-V7D	G	11	0.03	AUTO	AUTO			2-21EC	3075-37A
EMERG DSL GEN AUX	G	11	13.70	ON	ON			2-21EC	( )
SD-P-10C/D	G	11	8.40	AUTO	AUTO	—	—	2-21EC	3075-126
DF-P-2C/2D	G	11	5.00	AUTO	AUTO			2-21EC	3075-47
FDWTR & CONDENSATE									
EF-P-2B	G	23	373.00	STOP	RUN	ZTK1	6	2-2E	
(1) NUC SVCE RIVER WTR									
NR-P-1C	G	27	332.00	RUN (1/4)	RUN (1/4)	—	—	2-4E	3073-77
NR-V184C	G		0.03	OPEN	(OPEN)			MP2-41E	3079-26
NR-V150C	G		0.03	SHUT	(SHUT)			MP2-41E	3079-26
NR-V2C	G		0.55	OPEN	(OPEN)			2-41E	3074-61
NR-P-1D	G	27	332.00	RUN (1/4)	RUN (1/4)	—	—	2-4E	3073-77
NR-P-4A	G	17	2.50	RUN	(RUN)			2-41E	3074-108
NR-V184D	G	17	0.03	OPEN	(OPEN)			MP2-41E	3079-26
NR-V150D	G	17	0.03	SHUT	(SHUT)			MP2-41E	3079-26
NR-V2D	G	17	0.55	OPEN	(OPEN)			2-41E	3074-61
NR-S-1B	G	11	0.83	AUTO	AUTO	—	—	2-41E	( )
NR-V153B	G	11	0.03	OPEN	OPEN	—	—	(2-41E)	( )
HVAC RIVER WTR. P-HSE									
AH-C-20B	G	31	12.70	RUN	RUN	ZTK4	14	2-41E	

ENG. DES.	ELEC. ENG.	MECH. ENG.	CIVIL ENG.		REV. NO.	REVISIONS
CLEARED BY	DPH				4	DELETED INST AIR IA-P-1B, IA-Q-1B REVISED ES ACT. & TIME LETTINGS PER PCN
DATE	3-21-75					
REV. BY CH. DRAFTING	AA Wu 12/87		2-18-75			

L.O.P.

4.1G KV SWGR ESF BUS 2-2E
EMERG POWER LOAD SEQUENCE

NDITION & KW LOADS

SYSTEM / COMPONENT (1)	COLOR	ES ACTUATION (2)	KW	NORMAL (3)	LOP (3)	TIMING RELAY NO.	SETTING (SEC)	POWER SUPPLY	ELECT. ELEM.
BATTERY SUPPLY									
RECT 2-2A - 2-2D	G	11		ON	ON	—	—	2-22E	3010
MISC PWR PNL MP2-41E	G	11	140.00	ON	ON	—	—	2-41E	3017
MISC PWR PNL (E&W PNLS)	G	11		ON	ON	—	—	2-22E	3005
RAD MONITORING									
PWR PNL RMP-EB	G	11	12.5	ON	ON	—	—	2-21EA	3017-3
MISC PWR PNL MP2-21EB	G	11	11.30	ON	ON	—	—	2-21EB	3017-3
EMERG DSL GEN LTG PNL LP2-21EC	G	11	11.13	ON	ON	—	—	2-21EC	3017-3
MISC PWR PNL MP-21EC	G	11	12.55	ON	ON	—	—	2-21EC	3017-3
CONTROL BLDG LTG									
PDP-2E	G	11		ON	ON	—	—	2-22E	3074-20A
LPC-2BE	G	11	37.00	ON	ON	—	—	2-22E	3074-20A
LPC-4BE	G	11		ON	ON	—	—	2-22E	3074-20A
LPC-6BE	G	11		ON	ON	—	—	2-22E	3074-20A
NUC SVCE CL COOL WTR									
NS-P-1B	G	17	83.00	RUN (2/3)	RUN (2/3)	—	—	2-21EB	3075-90
NS-P-1C	R/G	22	83.00	RUN (2/3)	RUN (2/3)	—	—	2-11EB/2-21EB	3075-89
MAKE-UP & PURIF									
MU-P-1B	R/G	14	270.00	RUN (1/3)	RUN (1/3)	—	3	2-1E/2-2E	3073-10A
AUX GEAR LUBE OIL PP	R/G	11	0.83	RUN/RUN	RUN/RUN	—	—	MCC 2-11EA/21EA	3075-192
MAIN BRG LUBE OIL PP	R/G	11	0.42	RUN/RUN	RUN/RUN	—	—	MCC 2-11EA/21EA	3075-193
AUX BRG LUBE OIL PP	R/G	11	0.42	RUN/RUN	RUN/RUN	—	—	MCC 2-11EA/22EA	3075-194
MU-P-1C	G	13.5	270.00	RUN (1/3)	RUN (1/3)	—	2.5	2-2E	3073-66
AUX GEAR LUBE OIL PP	G	11	0.83	RUN	RUN	—	—	MCC 2-21EA	3075-195
MAIN BRG LUBE OIL PP	G	11	0.42	RUN	RUN	—	—	MCC 2-21EA	3075-196
AUX BRG LUBE OIL PP	G	11	0.42	RUN	RUN	—	—	MCC 2-21EA	3075-197

NUCLEAR SAFETY RELATED
ENGINEERED SAFETY FEATURES

NOTES:

1. CONTD. ON SH 71B
2. NOTES ON SH 71C

APPROVED BY CLIENT

not required

	APP. BY CLIENT	BY	CHKD.	APP.	DATE
.1G SUP. 2	—	J.I.	S.C.	RJ	12-10-76

BURNS AND ROE, INC.
ORADELL, N.J. HEMPSTEAD, N.Y. LOS ANGELES, CALIF.

4.1G KV SWGR ESF BUS 2-2E
EMERG POWER LOAD SEQUENCE

JERSEY CENTRAL POWER & LIGHT CO.
THREE MILE ISLAND STATION — UNIT 2

DRAWN	SQUAD LEADER	DATE	SCALE
TRACED			
CHECKED		2-14-75	

APPROVED FOR CONSTRUCTION
R.K.V. Rebbapragada
CHIEF ELECTRICAL ENGINEER

W. O. 2555

DWG. 3073 SH 71A REV. 4

ES & LOP

4.16 KV SWGR ESF BUS 2-2E
EMERG POWER LOAD SEQUENCE

OPERATING COND

SYSTEM/ COMPONENT (1)	COLOR	ES ACTUATION (2)	KW	NORMAL (3)	LOCA (3)	TIMING RELAY*	SETTING (SEC)	POWER SUPPLY	ELECT. ELEM.
HVAC CONTROL RM									
AH-E-4B	G	20	33.20	STOP	RUN (1/2)	2TK6	6	2-22E	3074-37
AH-D4091B	G		0.03	SHUT	OPEN			2-22E	3074-37
AH-V124B	G		0.03	ENERG	DE-ENERG			120V. NORMAL	3074-37
AH-C-1GB	G	17	12.40	RUN (1/2)	RUN (1/2)	2TK10	6	2-22E	3074-38
AH-D4096B	G		0.03	OPEN	OPEN			2-22E	3074-38
AH-V132B	G		0.03	OPEN	OPEN			2-22E	3074-38
HVAC CABLE RM									
(6) AH-C-17B	G	25	24.80	RUN (1/2)	RUN (1/2)	2TK20	14	2-22E	3074-38A
AH-D4074B	G		0.03	OPEN	OPEN			2-22E	3074-38A
AH-V28B	G		0.03	OPEN	OPEN			2-22E	3074-38A
(6) AH-C-19B	G	25	16.60	RUN (1/2)	RUN (1/2)	2TK7	14	2-22E	3074-80
AH-D4058B	G		0.03	OPEN	OPEN			2-22E	3074-80
AH-V85B	G		0.03	OPEN	OPEN			2-22E	3074-80
HEV DSL GEN BLDG									
AH-E-24B	G	11	4.20	AUTO	AUTO	—		2-21EC	3075-115
AH-D5031A	G		0.03	MODUL	MODUL			2-21EC	3075-115
AH-D5031B	G		0.03	MODUL	MODUL			2-21EC	3075-115
REAC BLDG VENT & PURGE									
AH-V80	G	11	0.10	CLOSE	CLOSE	—		2-21EA	3075-170
REAC BLDG SPRAY									
BS-V1B	G	11	2.16	CLOSE	OPEN (MANUAL			2-21EA	3075-64
BS-V4B	G	11	0.28	CLOSE	OPEN THROTTLE)			2-21EA	3075-72
NUCLEAR SAMPLING									
CA-V1	G	11	0.10	CLOSE	CLOSE	—		2-21EA	3075-68
CA-V3	G	11	0.10	CLOSE	CLOSE			2-21EA	3075-68
CA-V6	G	11	0.10	CLOSE	CLOSE			2-21EA	3075-68
CA-V4B	G	11	0.10	CLOSE	CLOSE			2-21EA	3075-67
CORE FLOODING									
CF-V13	G	11	8.70	OPEN	OPEN	—		2 21EB	3075-50
CF-V115	G	11	0.10	CLOSE	CLOSE			2 21EA	3075-158
EMERG DSL GEN									
DF-P-1C	G	11	0.42	AUTO	AUTO (1/2)	—		2-21EC	3075-37A
DF-V7C	G		0.03	AUTO	AUTO			2-21EC	
DECAY HEAT REMOVAL									
DH-V4B	G	11	10.6	SHUT	OPEN	—		2-21EA	3075-65
DH-V5B	G	11	4.40	SHUT	OPEN			2-21EA	3075-69
DH-V8B	G	11	0.33	SHUT	OPEN			2-21EA	3075-139
DH-V100B	G	11	1.33	SHUT	SHUT			2-21EA	3075-142
DH-V102B	G	11	2.16	OPEN	OPEN			2-21EA	3075-139
NITROGEN FOR NUCLEAR & RADWASTE									
NN-V104 (203) PCN 1747	G	11	0.10	OPEN	SHUT	—		2-21EB	3075-85
RIVER WTR P-HSE HVAC									
AH-C-20B	G	25	12.70	RUN	RUN	2TK8	14	2-41E	

ENG DES	ELEC. ENG	MECH ENG	CIVIL ENG.		REV NO	REVISIONS
CLEARED BY	DWR				1	ADDED CLIENT'S DISPOSITION, ISSUED FOR CONSTRUCTIO
DATE	3 31 75					
REV BY CH. DRAFTS	AA U. Hanni / PHET		2-18-75			

4.16 KV SWGR ESF BUS 2-2E
EMERG POWER LOAD SEQUENCE

DITION AND KW LOAD

SYSTEM/ COMPONENT (1)	COLOR	ES ACTUATION (2)	KW	NORMAL (3)	LOCA (6)	TIMING RELAY #	POWER SUPPLY	ELECT ELEM
RADWASTE DISPOSAL GAS								
WDG-V2	G	11	0.28	OPEN	SHUT	—	2-21EA	3075-186
MAKE-UP & PURIF								
(5) MU-V(16C) & 16D	G	11	2.70	SHUT	OPEN	—	(2-21EA)	3075-63
MU-V18	G	11	0.03	MANUAL	SHUT		125V DC CAB 164	3079-6
MU-V37	G	11	0.274	OPEN	SHUT		2-21EA	3075-71
MU-V25	G	11	1.0	OPEN	SHUT		2-21EA	3075-105
(1) NUC SVCE RIVER WTR								
NR-P-1C	G	21	332.00	RUN (1/4)	RUN (1/4)	—	2-4E	3073-77
NR-P-4A	G		2.50	RUN	RUN		2-41E	3074-108
NR-V184C	G		0.03	OPEN	OPEN		MP2-41E	3079-26
NR-V186C	G		0.03	SHUT	SHUT		MP2-41E	3079-26
NR-V2C	G		0.55	OPEN	OPEN		2-41E	3074-61
NR-P-1D	G	21	332.00	RUN (1/4)	RUN (1/4)	—	2-4E	3073-77
NR-P-4A	G	11	2.50	RUN	RUN		2-41E	3074-108
NR-V184D	G	11	0.03	OPEN	OPEN		MP2-41E	3079-26
NR-V186D	G	11	0.03	SHUT	SHUT		MP2-41E	3079-26
NR-V2D	G	11	0.55	OPEN	OPEN		2-41E	3074-61
NR-V40B	G	11	0.55	OPEN	OPEN	—	2-21EA	3075-94
NR-V51B	G	11	0.11	OPEN	SHUT	—	2-21EA	3075-26
NR-S-1B	G	11	0.89	AUTO	AUTO	—	2-41E	(——)
NR-V153B	G	11	0.103	OPEN	OPEN	—	2-41E	(——)
NS-V100	G	11	0.70	OPEN	SHUT	—	2-21EA	3075-181
CONTROL BLDG LTG								
PDP-2E	G	11	37.00	ON	ON	—	2-22E	3074-20A
LPC-2BE	G	11		ON	ON		2-22E	3074-20A
LPC-4BE	G	11		ON	ON		2-22E	3074-20A
LPC-6BE	G	11		ON	ON		2-22E	3074-20A

NOTES:
1. CONT'D ON SH. 71C
2. NOTES ON SH. 71C

ENGINEERED SAFETY FEATURES
NUCLEAR SAFETY RELATED

	APP. BY CLIENT	BY	CHKD	APP.	DATE
DN. PCN #1905			ACB		3/24/71

APPROVED BY CLIENT: not required

BURNS AND ROE, INC.
ORADELL, N.J. HEMPSTEAD, N.Y. LOS ANGELES, CALIF.

4.16 KV SWGR ESF BUS 2-2E
EMERG POWER LOAD SEQUENCE

JERSEY CENTRAL POWER & LIGHT CO.
THREE MILE ISLAND STATION — UNIT 2

DRAWN AVEVER | TRACED | CHECKED ACB | SQUAD LEADER | DATE 2-12-75 | SCALE

APPROVED FOR CONSTRUCTION
R K V Rebbapragada
for CHIEF ELECTRICAL ENGINEER

W. O. 2555
Dwg 3073 SH 71B REV 1

4.16 KV SWGR ESF BUS 2-2E
EMERG POWER LOAD SEQUENCE

OPERATING COND

SYSTEM/ COMPONENT (1)	ES ACTUATION (2) COLOR		KW	NORMAL (3)	LOCA (3)	TIMING RELAY RELAY NO.	TIMING RELAY SETTING (SEC.)	POWER SUPPLY	ELECT. ELEM.
BATTERY SUPPLY									
RECT. 2-2A - 2-2D	G	11		ON	ON	—	—	2-22E	3010
MISC PWR PNL MP2-41E	G	11	140	ON	ON	—	—	2-41E	3017
MISC PWR PNL (BEW PNLs)	G	11		ON	ON	—	—	2-22E	3005
RAD MONITORING									
PWR PNL RMP-EB	G	11		ON	ON	—	—	2-21EA	3017-3
MISC PWR PNL MP2-21EB	G	11	11.30	ON	ON	—	—	2-21EB	3017-3
EMERG DSL GEN LTG PNL LP2-21EC	G	11	11.75	ON	ON	—	—	2-21EC	3017-3
MISC PWR PNL MP2-21EC	G	11	12.55	ON	ON	—	—	2-21EC	3017-3
REAC BLDG EMERG COOL									
RR-V2C	G	11	0.55	SHUT	OPEN	—	—	2-21EA	3075-97
RR-V2D	G	11	0.55	SHUT	OPEN	—	—	2-21EA	3075-97
RR-V6C	G	11	0.83	MANUAL	OPEN	—	—	2-21EA	3075-189
RR-V6D	G	11	0.83	MANUAL	OPEN	—	—	2-21EA	3075-189
RR-V6E	G	11	0.83	MANUAL	OPEN	—	—	2-21EA	3075-189
RADWASTE DISPOSAL LIQ									
WDL V-271	G	11	4.2	OPEN	SHUT	—	—	2-21EA	3075-135
NUC SVCE CL COOL WTR									
NS-P-1B	G	11	83.00	RUN (2/3)	RUN (2/3)	—	—	2-21EB	3075-90
NS-P-1C	R/G	16	83.00	RUN (2/3)	RUN (2/3)	—	—	2-11EB/-21EB	3075-69
MAKE-UP & PURIF									
MU-P-1B	R/G	14	270.00	RUN (1/3)	RUN (2/3)	—	3	2-1E/2-2E	3073-10A
AUX GEAR LUBE OIL PMP	R/G	11	0.83	RUN/RUN	RUN/RUN	—	—	MCC2-11EA/2-21EA	3075-192
MAIN BRG LUBE OIL PMP	R/G	11	0.42	RUN/RUN	RUN/RUN			MCC2-11EA/2-21EA	3075-193
AUX BRG LUBE OIL PMP	R/G	11	0.42	RUN/RUN	RUN/RUN	—	—	MCC2-11EA/2-22EA	3075-19[illegible]
MU-P-1C	G	13.5	270.00	RUN (2/3)	RUN (2/3)	—	2.5	2-2E	3073-68
AUX GEAR LUBE OIL PMP	G	11	0.83	RUN	RUN	—	—	MCC2-21EA	3075-195
MAIN BRG LUBE OIL PMP	G	11	0.42	RUN	RUN	—	—	MCC2-21EA	3075-196
AUX BRG LUBE OIL PMP	G	11	0.42	RUN	RUN	—	—	MCC2-21EA	3075-197
DECAY HT CL COOL WTR									
DC-P-1B	G	17	62.00	STOP	RUN (1/2)	ZTK9	6	2-21EB	3075-87
DECAY HT REMOVAL									
DH-P-1B	G	11	290.00	OFF	RUN (1/2)	—	—	2-2E	3073-50
REAC BLDG SPRAY									
BS-P-1B	G	25	207.00	STOP	RUN	ZTK11	14	2-2E	3073-51
FDWTR. & CONDENSATE									
EF-P-2B	G	17	373.00	STOP	RUN	ZTK5	6	2-2E	

ENG. DES.	ELEC. ENG.	MECH. ENG.	CIVIL ENG.		REV. NO.	REVISIONS
CLEANED BY	D. Hyde				4	TABLE REVISED UNDER ESACTUATION-1 & TIMING RELAY SETTING (3) NUC SVCE CL COOL WTR PMPS NS-P-1B & NS-P-1C. REV TIMING RELAY SE FOR MAIN BRG LUBE OIL PMP MU-P-1B PER PCN 2116 SUPPL 2.
DATE	1-31-75					
REV. BY	H.A. Williams		2-10-75			

4.16 KV SWGR ESF BUS 2-2E
EMERG POWER LOAD SEQUENCE

TIONS & KW LOADS

SYSTEM / COMPONENT (1)	COLOR	ES ACTUATION (2)	KW	NORMAL (3)	LOCA (3)	TIMING RELAY NO.	RELAY SETTING (SEC.)	POWER SUPPLY	ELECT ELEM
REAC BLDG VENT & PURGE									
AH-E-11C	R/G	27	82.90	RUN (3/5)	RUN (2/5)	2TK12	16	2-11E/2-21E	3074-46C
AH-E-11D	G	25	82.90	RUN (3/5)	RUN (2/5)	2TK13	14	2-21E	3074-46A
AH-E-11E	G	27	82.90	RUN (3/5)	RUN (2/5)	2TK14	16	2-21E	3074-46B
HVAC CONTROL RM									
AH-P-1B	G	100	8.30	MANUAL	RUN (1/2)	2TK15	89	2-22E	3074-53
NR-V144B	G		0.09		OPEN	—	—	2-22E	3074-53
AH-C-8B	G	102	110.00	MANUAL	RUN (1/2)	2TK16	89	2-22E	3077-4
NUC SVCE RIVER WTR									
NR-P-2B	G	100	23.20	RUN (1/2)	RUN (1/2)	2TK17	89	2-22E	3074-81
REAC BLDG EMERG COOL									
RR-P-1C	G	100	166.00	STOP	RUN (1/4)	2TK18	89	2 21E	3074-73
RR-P-1D	G	100	166.00	STOP	RUN (1/4)	2TK19	89	2 21E	3074-73

NOTES:

1) SYSTEM SUBCOMPONENTS LISTED UNDER MAIN SYSTEM COMPONENTS ARE INTERLOCKED TO OPERATE WITH THE MAIN SYSTEM COMPONENT e.g. NR-P-4B STARTS WHEN EITHER NR-P-1A OR 1B RECEIVES A START SIGNAL

2) ES ACTUATION: 1. HIGH PRESSURE INJECTION — — — — 1600psi REAC COOL PRESSURE
2. REAC BLDG ISOLATION & COOLING — — 4psig REAC BLDG PRESSURE
3. REAC BLDG SPRAY — — — — — — — 30psig REAC BLDG PRESSURE
NUMBERS UNDER ONE OR MORE OF THESE COLUMNS INDICATE TIME IN SECONDS AFTER A LOCA AT WHICH THE ASSOCIATED COMPONENT RECEIVES AN ES ACTUATION SIGNAL.

3) THE FRACTION FOLLOWING THE OPERATING STATUS INDICATES HOW MANY COMPONENTS IN THE SYSTEM ARE REQUIRED TO OPERATE e.g. NR-P-1A - RUN 1/4 MEANS ONLY ONE PUMP IS REQUIRED FOR NORMAL OPERATION.

4) THE NUMBER PRECEDING THE OPERATING STATUS IS THE TIME IN SECONDS AFTER A LOP AT WHICH THE ASSOCIATED COMPONENTS RECEIVES AN ACTUATION FROM THE LOP LOADING SEQUENCE.

5) LOADING OF THESE COMPONENTS DURING LOCA IS NOT CRITICAL AND THEY MAY BE ACTUATED LATER IN THE LOADING SEQUENCE OR MANUALLY ACTUATED AS MAY BE DETERMINED BY FURTHER STUDY.

ENGINEERED SAFETY FEATURES
NUCLEAR SAFETY RELATED

APPROVED BY CLIENT
NOT REQ'D

	APP. BY CLIENT	BY	CHKD	APP	DATE
(2) FOR TTING (SEC)	~	[illegible]	CSC	[illegible]	2.10.75

BURNS AND ROE, INC.
ORADELL, N.J. HEMPSTEAD, N.Y. LOS ANGELES, CALIF.

4.16 KV SWGR ESF BUS 2-2E
EMERG POWER LOAD SEQUENCE

JERSEY CENTRAL POWER & LIGHT CO.
THREE MILE ISLAND STATION — UNIT 2

DRAWN BY [illegible] | SQUAD LEADER [illegible] | DATE 2-14-75 | SCALE
TRACED
CHECKED

APPROVED FOR CONSTRUCTION
RKN Rebbapragada
CHIEF ELECTRICAL ENGINEER

W. O. 2555
DWG. 3073 SHT 1C | REV. 4

SAFETY INJECTION "A"

GP3	GP2	GP1
DH-P-1A	Main Bearing Lube Oil	NS-P-1A
T31E-41E-2	NR-V9A	MU-P-1A (Main Brg Oil PU)
NR-P-1B	T12E-22E-2	TIE-2E-2
MU-V36	NR-V40A	Annun. C33 P8
NS-V84B	NS-P-1C	Auto Leading
MU-V16A	P8, Annun. C33	DC-V96A
MU-V16B	DH-V102A	T3E-4E2
NR-V42A	DH-V4A	DC-P-1A
NS-V215 } 6323B/RCA	DH-V5A	NR-P-1A
NS-83A } 6323B/RCA	DH-V8A	Auto Loading
NS-V83B } 6323B/RCA		T11E-21E-2
NS-V216 } 6323B/RCA		DF-X-1A
		DF-X-1A
		G2-12
		DF-X-1A
		DF-X-1A
		DF-X-1A

R.B. ISO & CLG "A"

GP1	GP2	GP3
FB-FYV-3740-1	BS-V1A	AH-C-8A
FB-FYV-3741-1		MU-V2A
NR-V51A	CA-V4A	AH-E-11C
DH-V3	RR-P-1B	IC-P-1A
NM-V52	CA-V9	MU-V377
CF-V144	CA-V10	IC-V2
RR-V2B	WDG-V1126	AH-E-11B
RR-V2A	WDL-V22	IC-V5(AC)
SV-V55	AH-E-11A	IC-V5(DC)
RR-V5A	EDG-V199	NS-V81(DC)
RR-V5B	AH-V125A	NS-V81(AC)
RR-V5C	AH-E-4A	NR-P-2A
AH-V101,2,5,7	AH-E-4A	NS-V72(DC)
AH-V81	WDL-P-2A	NS-V72(AC)
WDL-V1095	WDL-P-2B	RR-V25A
DC-V114	AH-D-4073,AH-EP-5246B	RR-V25B
AH-V60,62,5,22,1A,1B,4A, 4B,AH-E-12A&B,19A&B	2-1V Shunt Trip	RR-P-1A
AH-P-1A	2-3V Shunt Trip	
MU-V2B	RR-V25C-51	

SAFETY INJECTION "B"

GP3	GP2	GP1
DH-P-1B	MU-P-1C	NS-P-1B
T41E-31E-2	T22E-12E-2	DC-V96B
NR-P-1D	NR-V9B	MU-P-1B (Mn Brg Oil PU)
MU-V37	NR-V40B	P8 Annun D33
MU-V16C	NS-P-1C	Auto Loading
MU-V16D	P8 Annun C33	T21E-11E-2
NS-V32(DC)	DH-V102B	T4E-3E-2
NS-V32(AC)	DH-V4B	DC-P-1B
NS-V67(AC)	DH-V8B	NR-P-1C
NS-V67(DC)		Auto Loading
NS-V215 } 6323C/RCB		T2E-1E-2
NS-V83A } 6323C/RCB		DF-X-1B
NS-V83B } 6323C/RCB		DF-X-1B
NS-V216		G22-12
NR-V42		DF-X-1B
		DF-X-1B
		DF-X-1B

R.B. ISO & GLC "B"

GP1	GP2	GP3
FB-FYV-3742-1	BS-V1B	MU-V25
NR-V51B		NR-P-2B
CF-V115	CA-V4B	IC-P-1B
DH-V2	RR-P-1D	MU-V376
NM-V104	CA-V8	AH-P-1B
RR-V2C	CA-V1	NS-V100
RR-V2D	CA-V3	RR-P-1C
AH-V80	CA-V6	IC-V3(AC)
SV-V54	WDL-V271	IC-V3(DC)
RR-V6C	AH-E-11C	IC-V4(AC)
RR-V6D	WDL-V1125	IC-V4(DC)
RR-V6E	WDG-V2	RR-V25D
AH-V103,4,6,8	WDL-P-2A	RR-V25E
WDL-V1092	WDL-P-2B	AH-C-8B
DC-V103	AH-D-4073,AH-EP-5246B	
AH-E-11D	2-2V Shut Trip	
DC-V115	2-4V Shut Trip	
AH-V6,71,71,73,3A,3B,2A,2B	AH-E-4B	
AH-E-12A,12B,19A,19B	RR-V2SC-52	
AH-E-11E	AH-V125B	
MU-V18		

X. REFERENCES

A. System Descriptin Index #50 - Safety Features Actuation System

B. Unit 2 FSAR

Chapter 6 - Engineered Safety Features

Chapter 7.3 - Engineered Safety Features and Supporting System Instrumentation and Controls

Chapter 8 - Electrical Power

Chapter 9 - Auxiliary Systems

C. Unit 2 Technical Specifications

Sections 3.3.2, 3.5, 3.6, 3.7.3, 3.7.4, 3.7.7

D. B&R Drawings:

3091 Series SFAS Elementarig

2024 MU and RC

2026 DH

2030 NS

2033 NR and RR

2034 BS and CF

2035 DC

2044 Control Building HVAC

2636 EB

E. Procedure 2202-1.3

F. Procedure 2105-1.3

ENCLOSURE 1

UNIT II CATEGORY IV STUDY ASSIGNMENT SHEET

CYCLE 3-1

NAME_____ START DATE_____

COMPLETION DATE_____

1. Read the Unit II Turbine Generator Controls Handout.

2. Read the following sections of the Turbine Tech. Manual:
   a. Vol. I Tab #5, #8a, #8p, #8r, #10, #11, #12, #19, #23, #29, #37, #40, #41, #42.
   b. Vol. II Tab #8 under "Heat Transfer Apparatus"
   c. Vol. III, Book 1, Sections 2 & 3

3. Read the following procedures:
   a. 2106-3.1 Turbine Generator
   b. 2106-3.2 Turbine Lube Oil System
   c. 2106-3.4 EHC
   d. 2106-1.2 Extraction Steam
   e. 2203-2.1 Load Rejection
   f. 2203-2.2 Turbine Trip

4. Complete the Turbine Generator Controls Questionnaire.

5. Read Section 4 Tech Specs (Surveillance)

TOTAL POINTS TO DATE FROM ENCLOSURE 2_____

WRITTEN TEST DATE_____ RESULTS _____

ORAL TEST DATE _____ RESULTS _____

ANSWERS MISSED, HANDED IN CORRECTED _____

_____ DATE: _____
SIGNATURE OF LICENSED TRAINING COORD.

CYCLE 3-1

REFERENCE MATERIAL FOR QUESTIONNAIRE

REF.#	TITLE
1	Handout (provided)
2	Westinghouse Turbine Tech Manual (Spec #1)
3	OP 2106-3.1 Turbine Generator
4	OP 2106-3.2 Turbine Lube Oil
5	OP 2106-3.4 EHC
6	OP 2106-1.2 Extraction Steam
7	EP 2203-2.1 Load Rejection
8	EP 2203-2.2 Turbine Trip
9	System Description #2 - BLEED STEAM
10	System Description #7 - HEATER DRAINS

TURBINE GENERATOR CONTROL QUESTIONNAIRE

3-1

1. How is EHC fluid temperature controlled? What are the (a)minimum, (b) normal, (c) maximum fluid temperatures? (Ref. #1)

2. How many EHC Pumps are available? Required? What is the source of power for each? (Ref. #1)

3. Describe how EHC H.P. Supply header pressure is maintained. Include setpoints, alarms, and automatic interlocks. (Ref. #1)

4. Describe the function and operation of the LVDT's associated with the TV and GV actuators. (Ref. #1)

5. Which valves will trip closed following actuation of the OPC Soleniods? Physically, what prevents all valves from closing? (Ref. #1)

6. Concerning the AEH Controller, what is meant by "Speed Control" and "Load Control"? What determines which mode the controller is functioning in? (Ref. #1)

7. The AEH Controller is in "OPER AUTO", "SPEED CONTROL", and "TV CONTROL":
   a. What signal controls the GV's? Why?
   b. Describe two (2) methods of changing GV position in this condition. (Ref.#1)

8. How, by design, does the AEH Controller prevent valve movement when changing from "OPER AUTO" to "TURBINE MANUAL" control? (Ref.#1)

9. What effect, if any, does the speed error signal have on the AEH Controller when operating in "LOAD CONTROL"? (Ref. #1)

10. Explain how the AEH Controller (a) operation and (b) indications change when selected to "IMP IN" versus "IMP OUT" during a loading transient. (Ref. #1)

11. Explain the function and operation of the Throttle Pressure Controller. (Ref. #1)

12. At what speed do we normally transfer control to the GV's? Describe how the system perfroms this manipulation. (Ref.#1,3)

13. Briefly describe the function and operation of the IOPS. Include setpoints and a discussion of the various soleniod valves actuated by the system. (Ref. #1)

14. Describe the various flowpaths to, within, and from the MSR's. Include:
    a. sources of steam
    b. drain paths
    (Ref. #1)

15. Concerning the MSR Controller, explain the difference between the "400°F." and "HOT START" modes. When is each used? (Ref. #1,2,3)

16. Describe the function and operation of the extraction steam stop-check valves in the following situations: (Ref. #1)
    a. turbine reset for operation
    b. turbine trip
    c. FW Heater high-high level

17. Following a prolonged shut-down, how and why (by design) do we insure the turbine casings are free of water? (Ref. #3)

18. Draw a block diagram of the generator excitation system. (Ref. #1)

19. Briefly explain how the output of the Trinistat Power Amplifier is varied. (Ref #1)

20. What is the major difference between operating with the "Base Adjust" versus the "Volts Adjust" controls? What precautions must be observed when using the "Base Adjust" while the generator is on the line? (Ref. #1)

21. Outline the response of the WTA Regulator to a decreasing terminal voltage. (Ref. #1)

22. Briefly explain how the generator is synchronized in the "manual" and "auto" modes. (Ref. #1)

UNIT II TURBINE GENERATOR CONTROLS

TURBINE CONTROL

I. General

A. Turbine control is achieved by varying the turbine valves' openings. Hydraulic cylinder move the valves to the required opening, with electrically-operated servo valves controlling the cylinder's position. Electrical positioning signals originate in the controller. The operator may also position the valves through manual valve controllers.

II. E-H High Pressure Fluid System (fig 1.)

A. Function

1. The E-H fluid system provides motive force to position turbine steam valves in response to electrical commands from the electronic controller, acting through the servo-actuators.

B. System Fluid

1. Because of the unusual demands for reliability, a synthetic fluid is used. (tri-aryl phosphate ester)

2. The fluid should be at least 70° F before pumping. Normal operating temperature is 110°-130° F as maintained of SC-V-161. Maximum temperature should not exceed 140° F.

C. Reservoir

1. A 200 gallon stainless steel tank provided with a drain valve and filling assembly.

2. Normal operating level is 9/16-3/4 as indicated locally.

D. Pumps

1. We have two of identical capacity. Each is capable of full system load.

2. Each pump is a high pressure, positive-displacement vane pump.

3. Power supplies are:

   Pump 2A - MCC2-41A

   2B - MCC2-31A

4. Controls for the pumps are located on Panel #5. Each pump has a 3-position switch - "Pull-to-Lock", "Auto", and "Run".

5. The pump selected to "Auto" will start when EH pressure drops to 1350 psig

6. Both pump share a common suction strainer within the reservoir.

E. Discharge Filters

1. Two replaceable cartridges for each pump.

2. A DP switch is installed across each assembly to alert the operator when DP reaches 100 psid

F. Unloading Valves

1. One valve installed in the discharge of each pump to provide pressure control at 1800-2100 psig. With a pump operating, excess fluid is directed to the reservoir to maintain pressure. A ball check valve in line with the unloader prevents a loss of pressure from both pumps in the event of a single unloader failure.

2. A relief valve down stream of both unloaders acts as a backup in the event of an unloader failure in the high pressure condition.

G. Level Switches

1. 2 level probes provide the following:

   a. Hi level alarm at 22"

   b. Low level alarm at 17 5/8"

   c. Lo - Lo level alarm at 11 5/8"

   d. Low level trip at 7 5/8"

H. Coolers

1. Two parallel coolers are provided on the fluid return line to the reservoir. A three-way valve selects the cooler to be used.

2. Secondary closed cooling water provides the cooling by varying SC flow through the coolers (SC-V161).

3. A relief valve is provided upstream of the return coolers and filters to allow direct return to the reservoir in the event of a flow restriction.

I. Polishing Filters

1. This assembly consists of a single Fullers Earth filter in tandem with a replaceable cotton-cellulose filter.

2. Flow to the filters comes from the H.P. supply line via a 1 gpm orifice. The polished ail is returned to the reservoir.

J. Accumulators

1. High Pressure Side

a. We have four (4) H.P. accumulators to increase our ready reserve of H.P. fluid. The accumulators are cylinders containing 1250 psig N2 above a free floating piston. The arrangement is such that any accumlator may be removed from service without affecting the remainder.

2. Low Pressure (Pressurized Return Header)

b. Two L.P. accumulators are installed on the L.P. return line to the reservoir. Each consists of a steel cylinder and separating bladder. The 30 psig N2 charge above the bladder acts as a shock absorber (surge chamber) during fluid dump conditions.

K. Normal Operation (Refer to figure 1)

1. Under normal operating conditions, 1 EHC pump is running continuously. Fluid is pumped from the reservoir via the suction strainer into the H.P. header via the pump discharge filter. As header pressure increases to 2100 psig, the H.P. accumulators will store sufficient fluid to handle system demands. At 2100 psig, the pump's individual unloader will open to direct fluid to the reservoir until pump discharge pressure drops to 1900 psig where it is maintained. When accumlators discharge to less than 1900 psig, the unloader will direct pump fluid to the header to recharge them to 2100 psig.

2. The EHC system provides static holding pressure for the Reheat stop, interceptor, thottle, and governor valves. Additionally, the fluid pro-

vides position control via servo valves for the TV's & GV's. Because of the servo valves, there will be some flow through the return line (pressurized) at all times.

L. Throttle valve actuator (Refer to fig. 2)

1. This actuator provides position control as well as emergency tripping for the valve.

2. When the turbine is reset, the emergency trip fluid line is blocked and pressurized via an orificed line from the H.P. fluid supply. This static pressure holds the dump valve in the shut position.

3. When emergency trip fluid is vented back to the reservoir, spring tension and fluid pressure under the dump valve seat will open the dump valve. When the dump valve opens, fluid under the TV operating piston will flow to the EHC reservoir and spring tension will shut the TV.

4. Servo Valve (fig. 3)

   a. The servo valve provides for position control of the TV by converting an electrical signal (from the controller) to a hydraulic signal.

   b. A signal to the servo motor will cause rotation of the armature and attached flapper. The movement of the flapper will vary the flow through the nozzles causing a differential pressure between the two supply ports. This DP acts on the spool to cause movement to the left or righ t. The movement of the spool will either supply more fluid (left) or vent fluid (right) from the TV operating cyclinder. Assuming the desired result is to open the TV farther, the spools will move to the left to open the piston supply port (fig. 3A). H.P. fluid will then move the operating piston up, opening the TV. As the valve opens, the linear variable differential transformer (LVDT) will send an electrical signal opposing the controller signal. When the valve has opened enough to cause the LVDT output to equal the controller output. The servo motor loses its signal and the feed back spring

(fig 3A) will center the spool. With the spool centered, a hydraulic lock will hold the TV in place. For TV movement in the shut direction, a reduced controller signal is generated. This results in an excessive LVDT output being sent to the servo motor causing rotation in the opposite direction. As the spool moves to the right, fluid will be drained from the TV operating cylinder allowing spring tension to close the TV. While the TV is closing, the LVDT output is dropping to a point where it equals the controller output. At this time, the servo will again lose its signal and the spool will center. A hydraulic lock now holds the TV in the new position.

5. TV Emergency Trip Fluid

   a. As stated previously, this fluid is available anytime EHC fluid is. It's function is to hold the actuator pump valve closed so that HP fluid from the servo valve can control the TV. To keep the dump valve closed, we must keep the Emergency trip fluid blocked by two valves (fig. 4), the interface valve and emergency trip stop valve. If either of these valves open, the fluid holding the actuator dump valve will drain to the reservoir causing the TV to trip shut. Additionally the GV's, Interceptors, and reheat stops valves will trip. A discussion of these valves be included in subsequent sections.

M. Governor valve Actuator

1. The governor valves operate identically to the throttle valves with <u>one exception:</u> They have an <u>additional trip function</u> actuated by the <u>overspeed</u> protection controller. This trip is accomplished by additional emergency trip fluid stop valves. These stop valves (fig. 4) dump fluid from only the <u>governor valves</u> and <u>interceptor valves</u>. They are opened by two signals:

   a. 103% overspeed sensed by the aux speed pickup.

   b. Full load drop

O. Reheat Stop and Interceptor Valve Actuator (fig. 5)

1. These valves are either open or closed - we have no provisions or need for any other position.

2. The actuator is similar to TV's & GV's except no servo valve is used. As a result, so long as the actuator is reset (emergency trip fluid blocked). The valves will be fully open. Three methods of closing the valves are available:

   a. Dumping fluid via the interface and/or emergency tripsolenoid valve (closes all valves).

   b. Dumping fluid via the OPCsolenoid Trip valves (class only interceptor & governor valves as previously mentioned).

   c. Dumping fluid via the testsolenoid . This method allows individual valve cycling for testing.

P. Summary

1. The EHC fluid systems provides a reliable source of of hydraulic fluid for positioning and controlling the main turbine TV's, GV's, Interceptors, and Reheat stop valves. Throttle and governor valves are positioned by servo control valves. Reheat Stop & Interceptor valves are fully open or fully closed. Trip valves are as follows:

   a. Interface valve - opens when auto-stop oil pressure from the turbine L.O. system drops to 50 psig due to actuation of a turbine protective device. This will cause a trip of all TV's, GV's, Interceptor , and reheat valves.

   b. Emergency Trip solenoid - opens when a pressure switch monitoring auto-stop oil pressure closes at 45 psig decreasing. This valve is in parallel with the interface valve and simply acts as a redundant method of dumping all emergency trip fluid.

   c. Overspeed protection controll trip valves (OPC) - These valves receive a signal from the aux. speed channel to open at 103% overspeed or of full load drop. They dump emergency trip fluid from the governor and interceptor valves only. When the overspeed condition clears, the OPC solenoid valves shut and reset the tripped valves.

2. All valves may be operated individually for testing purposes from the AEHcontrol panel.

III. A-H Controller

A. Function

1. The E-H controller provides turbine control during all phases of operation including:

   a. speed control from turning gear to rated speed

   b. load control when generator breakers are closed

   c. automatic synchronizing

2. The E-H controller also provides for manual operation as a backup, protective interlocks, and bumpless transfer from mode to mode.

B. For the purposes of discussion, we will build the controller a step at a time. Each addition will be accompanied by an explanation of its use. Refer to figures 6A-6D for this section.

C. Figure 6A - This diagram depicts the basis for our controll scheme. By comparing our "desired speed or load" with the "actual speed or load", we can generate a signal proportional to the error or mis-match. This error signal is then used to control the TV or GV in such a way that the error is eliminated.

D. Figure 6 B - We have now added some necessary additions to our basic system. The LVDT signal to the TV and GV is used as a "feed back" to the servo actuator. This "feed back" cancels TV or GV matron when the desired position is reached. You will notice TV & GV manual controls have been added. These controls operate independent of the auto signal. When operating in this mode, the operator has total control of the TV's & GV's. Our last addition is the TV-GV Transfer controller. This device is used to select GV's as our controlling valves after the turbine has been rolled to 1700 RPM.

E. Figure 6 C - You will notice a "Latching Bias' circuit has been added to the "TV-GV Transfer" controls. This bias signal is used to maintain GV's at 100% open when controlling speed with the TV's. It will also hold the TV's wide open after we have transferred to GV control in preparation of turbine loading. Once in GV control, the TV's will not move unless testing, manual operation or a turbine trip occurs.

We now have push buttons for controlling valve position in the manual mode. These buttons are lighted when in "manual" and dark when in any auto mode. To minimized valve movement when changing from auto to manual (or vice versa), a "tracking circuit" has been installed. This device will maintain the auto and manual control outputs equal at all times. To verify the tracking circuit is functioning a meter has been installed that indicates (+) or (-) tracking error.

Lastly, a "GV position limiting" circuit has been added. With this device, the operator can set the maximum (as indicated) allowable opening for the GV's. If the auto are manual control signal causes the GV's to open until the GV limiter stops travel, a "valve pos. limit" light will come on. This device is used to limit GV opening when placing the generator on the line.

F. Figure 6 D - We have now added the remaining sections of major equipment to our controller. A discussion of each section follows:

1. Digital Reference - This device is used to communicate our desires to the auto control system. The reference can receive commands from the operator, ICS, auto sync controller, throttle pressure limiter (TPC), and runback circuits. To understand how the circuit operator, we will outline a normal start up to full load. Once at full load, we will discuss the various protective and supervisory features. Refer to figures 6D and 7A & 7B:

Initial Conditions: Unit is tripped

1st State temp. = 100° F

LP Turbine inlet temp $< 300^{o}$ F.

Initial Indications: The following lights are lit (fig. 7A)

"Turbine Manual"

"Unit Trip"

"Throt Valve Control"

"Throttle & Governor Valve position" indicator

(T1-T4 and G 1-G4 read 0%

"Throttle, Governor, Reheat Stop & Interceptor" valve position lights indicate closed.

STEP #1 - Select "Oper Auto". This button will light and Turbine Manual" and associated valve positioning buttons will go dark. In addition the "Hold, Δ , ∇ , GO" buttons will light indicating they are in the circuit.

As can be seen from fig. 6D, these buttons are used to select a desired value in the setter before relaying the command to the reference by depressing "GO". The "HOLD" button interrupts the command until "Go" is depressed again.

STEP # 2 - Lower governor "valve position limit" until it indicates 0%. Notice on figure 6D that this control will override any auto or manual signal sent to the GV's. We do this to prevent the GV's from opening immediately after latching the unit due to the bias applied to the GV's when in "TV control".

STEP # 3 - Depress "Latch" until the button lights up and "Unit Trip" darkens. What we have done is to reset the auto stop oil system, causing the interface valve to close. When the interface valve is shut, the dump valves for all turbine valve actuators will shut, allowing EHC fluid to position the valves. We should now see all interceptor and reheat

valve lights indicate open. The reference and setter" displays will indicate "0000" and the "speed control" lamp will energize. The "speed control" indicator means that all commands relative to turbine control will be based on turbine speed. This will continue until the generator breakers are closed. When the generator is on the line, speed will be a function of line frequency and we will then refer to load (MW) in all commands ("load control").

STEP #4 - To insure freedom of movement for the GV's Reheat Stop & Interceptor valves, we will trip the unit and observe valve movement. Before this is done, we must raise the GV "valve position limit" to 100%. This should allow the bias signal to fully open the GV's. Now trip the turbine and observe GV's, Reheats, Interceptors go shut.

STEP #5 - Before relatching the unit, lower the "valve position limit" to 0%. Latch the unit, observe the Reheat & Interceptor valves open etc. Raise the "valve position limit" to 100%. Select "operator auto", we are now ready to roll with steam.

STEP #6 - To roll the turbine with steam, we must (1) select the speed we want and (2) select the acceleration rate. This is done by raising the setter to 670 RPM, adjusting the acceleration rate to 200 RPM/min. By depressing the "GO" button, this command is relayed to the reference. The reference will now generate a signal proportional to our command and send it to the TV auto controller. The TV auto controller will position the TV servo actuator to allow the TV to begin opening. As the TV opens, turbine speed increases. The main speed pickup will now begin to generate a signal to be compared with the reference output. When the

two are equal, the TV auto controller will maintain a constant output to the TV servo. As the LVDT output equals the TV auto controller output, the TV's stop opening. We have now accelerated to 670 RPM at 200 RPM/min.

STEP #7 - We can now accelerate to 1700 RPM in a similar manner. At 1700 RPM, we can transfer to governor valve control in preparation for loading. This transition is performed by depressing the "TV-GV TRANS" button. When this is done, the "THROT VALVE CONTROL" light will go out and the "TV-GV TRANS" button will blink indicating a transfer in progress. During the transfer, we should notice the GV's closing and TV's opening. Once the transfer is complete, the "GOV VALVE CONTROL" light will be on. All subsequent commands will be directed to the "GV Auto Control" unless a trip occurs.

STEP #8 - Assuming all supervisory instruments are satisfactory, we ca[illegible] the turbine to synchronous speed (1800 RPM). Once at 1800 RPM, we lower the "VALVE POSITION LIMIT" to just above present GV valve position. This tactic minimizes load upon closing the generator breakers.

STEP #9 - We'll skip the generator loading sequence for now, and assume the breakers have just closed. The reference will automatically be pulesed to assume about 5% load and will indicate a number representing the GV signal. Mega watts will be indicated on the MW meter. The system is now in the "LOAD CONTROL" mode and will respond to commands for load changes only; unless speed becomes excessive.

Before we can assume more load, we must remove the GV "VALVE POSITION LIMIT" we inserted in STEP #8. After insuring that the reference is at the limiter set point, we can raise the limiter to 100% without assuming more load.

STEP #10 - Before we go on, we should discuss some relationships. Westinghouse has proven the Impulse Pressure (1st stage turbine shell) is proportional to MW and steam flow. With this in mind, they felt that this parameter would be ideal for controlling the turbine. In other words, if we make a demand to change MW (load), we can simply change impulse pressure in a linear fashion - resulting in a linear and proportional change in MW load. If we did not use this parameter to control load, we would have to rely on valve movement alone. Characteristically, this method would yield a non-linear escalation to full load as the various G V's opened in sequence. This phenomena is depcited in figure 8. Therefore, as long as the impulse pressure transducer is operable, we should select "IMP IN" before loading the turbine above initial load. When selected to "IMP IN", the reference and setter displays will indicate a val at is approximately equal to MW and is always directly proportional to MW. In other words, if we lose some vacuum on a hot day, our impulse pressure (and therefore our reference and setter display) may indicate a slightly higher valve than actual MW. But, a given change in demand (let's say 10) <u>will</u> result in a change of 10 MW electrical.

Now to raise load, we simply select the desired end-point in the setter, chose a load rate, and push "GO"

2. Throttle Pressure Controller (TPC)

   a. This device has been installed to prevent water induction into the turbine. The controller senses steam pressure at the throttles. If the pressure drops to 90% of design, the controller will run the turbine back at 200%/min until:

      1.) pressure recovers

      2.) 20% load

      3.) "TPC Out" is depressed

3. Operator Auto Sync

   a. This mode is used to automatically synchronize the generator with the line. Once the breakers close, the controller will revert to Operator Auto.

4. Operator ICS

   a. This mode allows reference signals to be controlled by the ICS

IV. Independent Overspeed Protection System (IOPS)

A. General - In addition to all the turbine protective devices we have seen thus far, we have installed an IOPS. This system is totally independent of the rest of system. Its function is to sense an overspeed condition and trip turbine by conventional means.

B. Components. (fig. 9)

1. Three (3) speed sensors are installed on the turbine shaft near the turning gear. These sensors actuate at 1998 RPM (same as other OS trips)

2. Actuation Channels A & B receive the output of the speed sensors. They are designed to cause an actuation when 2 out of 3 sensors indicate 1998 RPM. Each channel is capable of a full trip.

3.

b. Turbine Trip block solenoid (20-1) - this is a conventional device that will trip the turbine via the auto-stop oil system. It is energized by:

(1) IOPS (1998) (Channel A)

(2) EH controller (1998)

(3) Manual Button

(4) Various supervisory trips

c. Auto-Stop Oil Solenoid Dump Valve (20-2) - this is an addition to the conventional turbine trip circuit. It does the same thing that (b) did in the auto-stop oil system. It is energized by:

(1) IOPS (1998) (Channel B)

(2) EH controller (1998)

(3) Manual Button

(4) Various supervisory trips

Figure 1

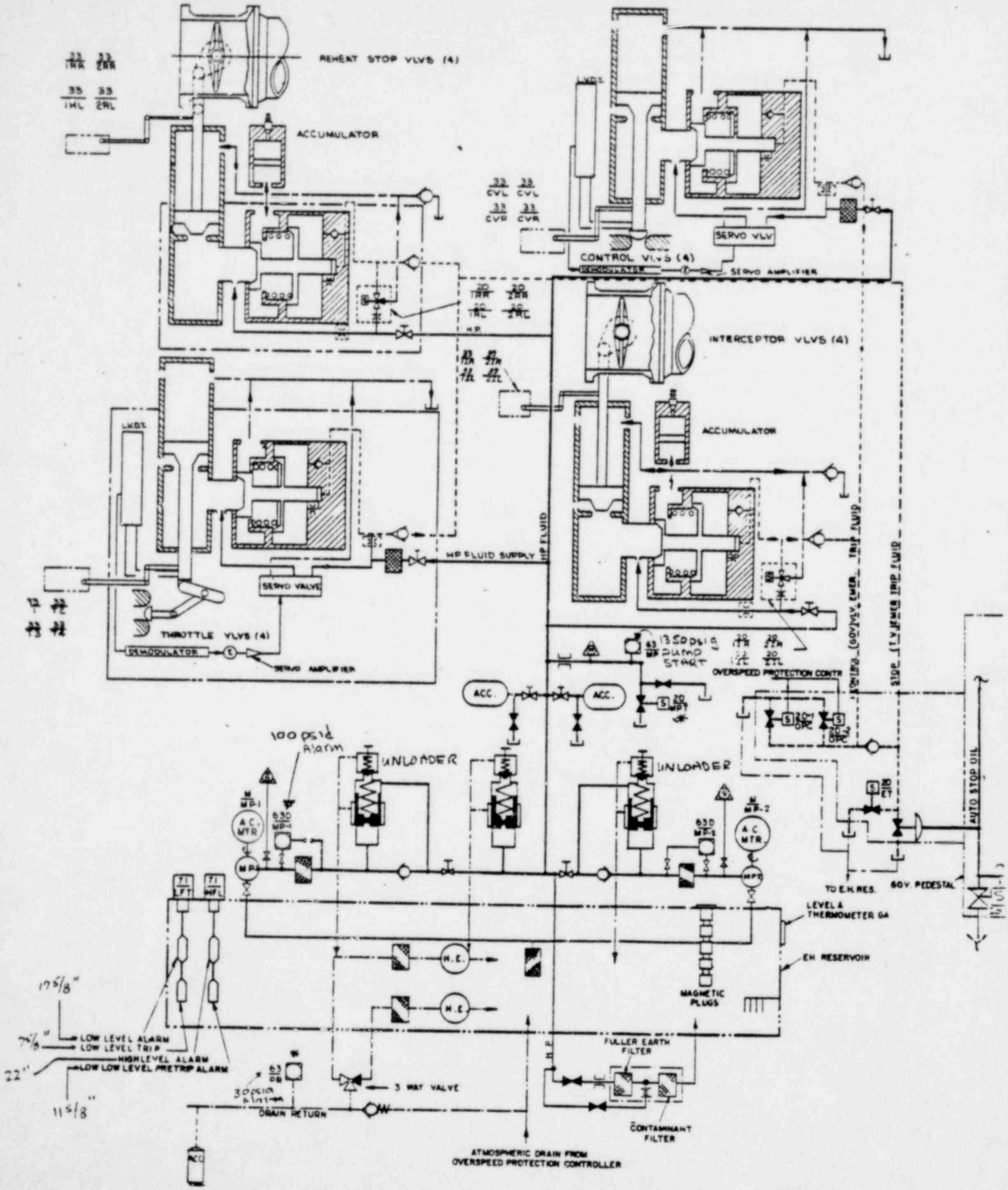
REHEAT STOP VLVS (4)
ACCUMULATOR
CONTROL VLVS (4)
SERVO VLV
SERVO AMPLIFIER
INTERCEPTOR VLVS (4)
ACCUMULATOR
H.P. FLUID SUPPLY
H.P. FLUID
SERVO VALVE
THROTTLE VLVS (4)
DEMODULATOR
SERVO AMPLIFIER
1350 psig PUMP START
OVERSPEED PROTECTION CONTR
ACC.
ACC.
100 psig Alarm
UNLOADER
UNLOADER
A.C. MTR
A.C. MTR
TO E.H. RES.
GOV. PEDESTAL
AUTO STOP OIL
LEVEL & THERMOMETER GA
EH RESERVOIR
MAGNETIC PLUGS
H.E.
H.E.
17 5/8"
7 1/8"
22"
11 5/8"
LOW LEVEL ALARM
LOW LEVEL TRIP
HIGH LEVEL ALARM
LOW LOW LEVEL PRETRIP ALARM
30 psig
3 WAY VALVE
DRAIN RETURN
FULLER EARTH FILTER
CONTAMINANT FILTER
ATMOSPHERIC DRAIN FROM OVERSPEED PROTECTION CONTROLLER

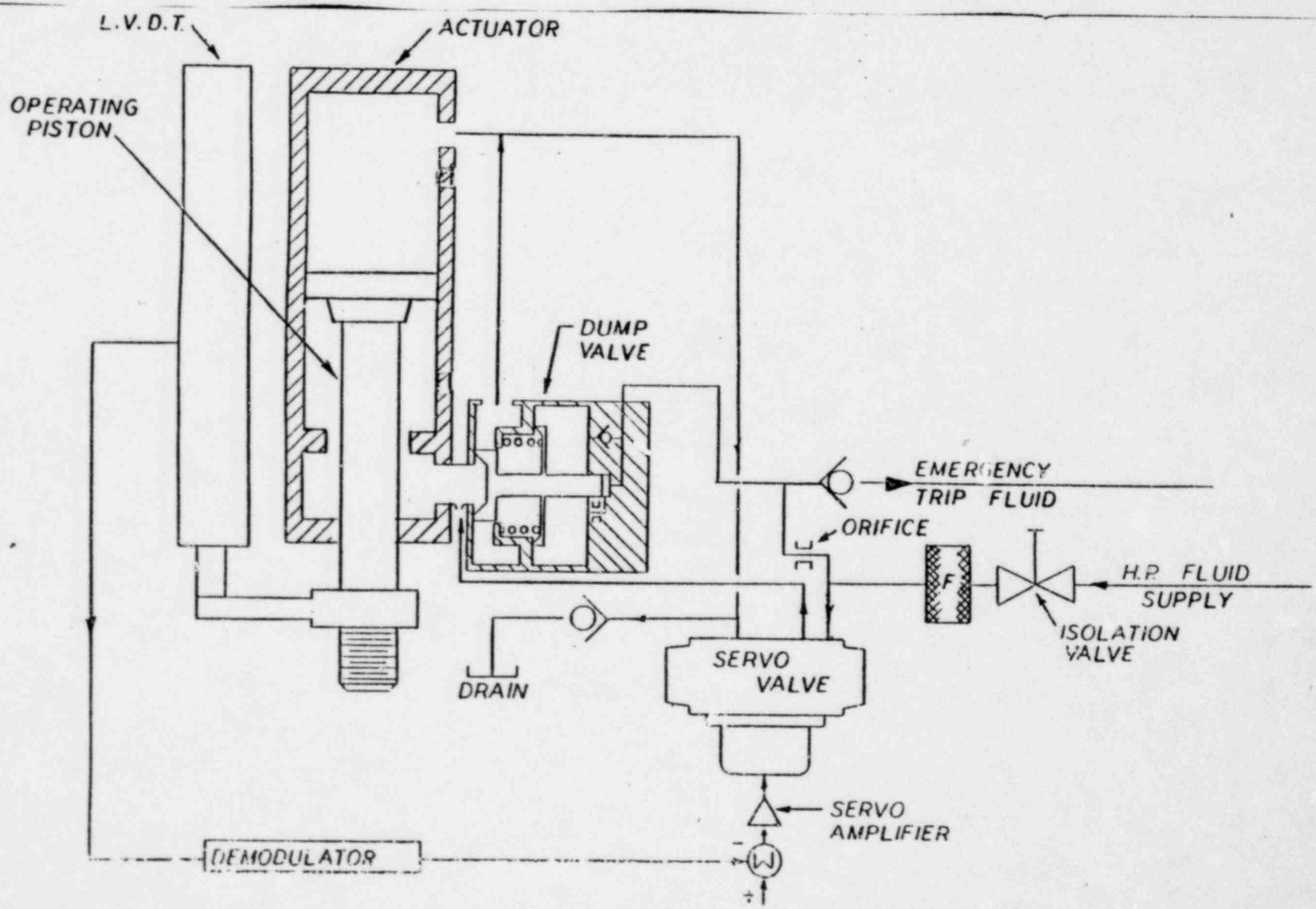
L.V.D.T.
ACTUATOR
OPERATING PISTON
DUMP VALVE
EMERGENCY TRIP FLUID
ORIFICE
F
H.P. FLUID SUPPLY
ISOLATION VALVE
SERVO VALVE
DRAIN
SERVO AMPLIFIER
DEMODULATOR

FIGURE 2

SERVO CONTROL VALVE

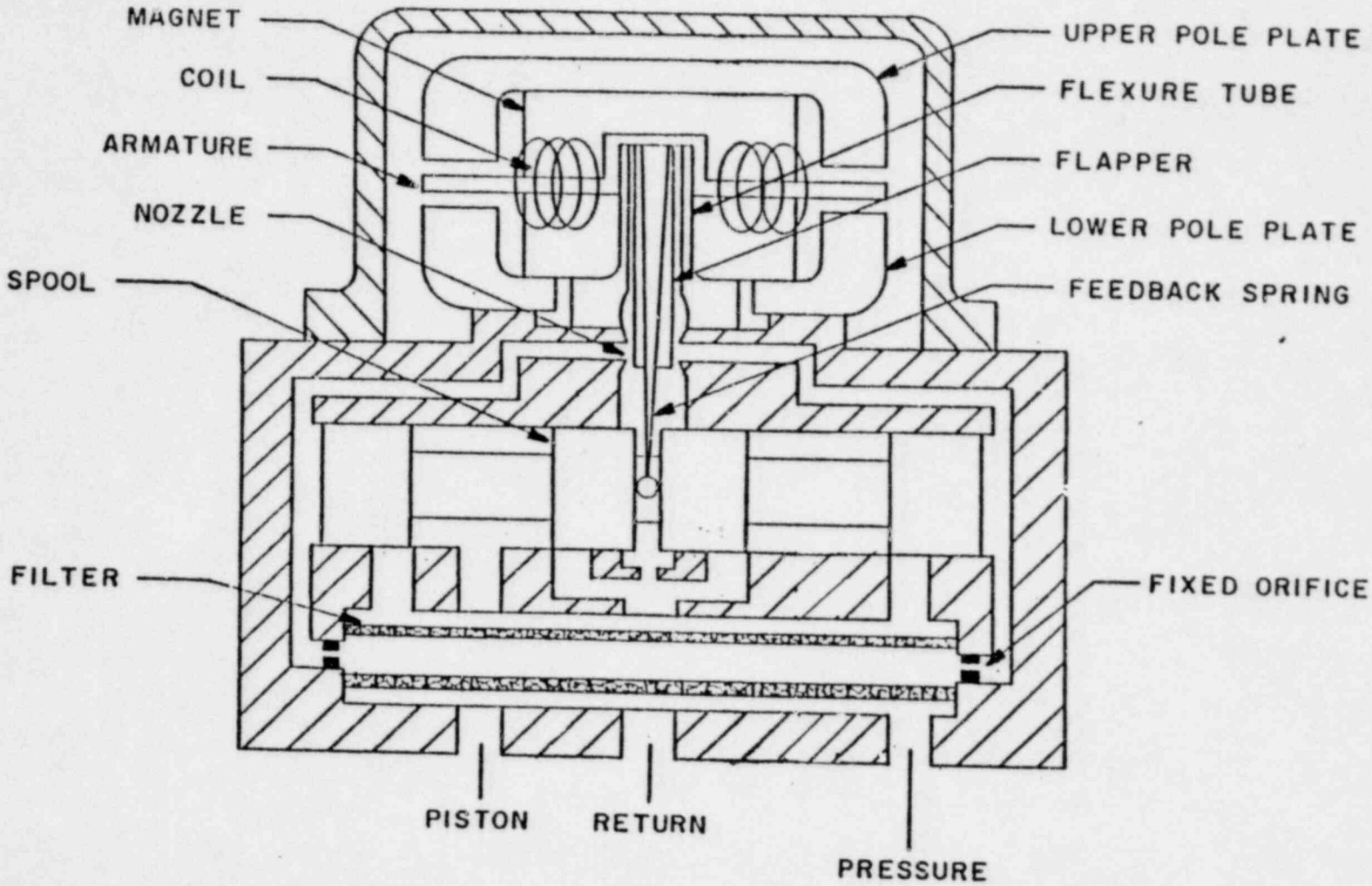

FIGURE 3

SERVO CONTROL VALVE

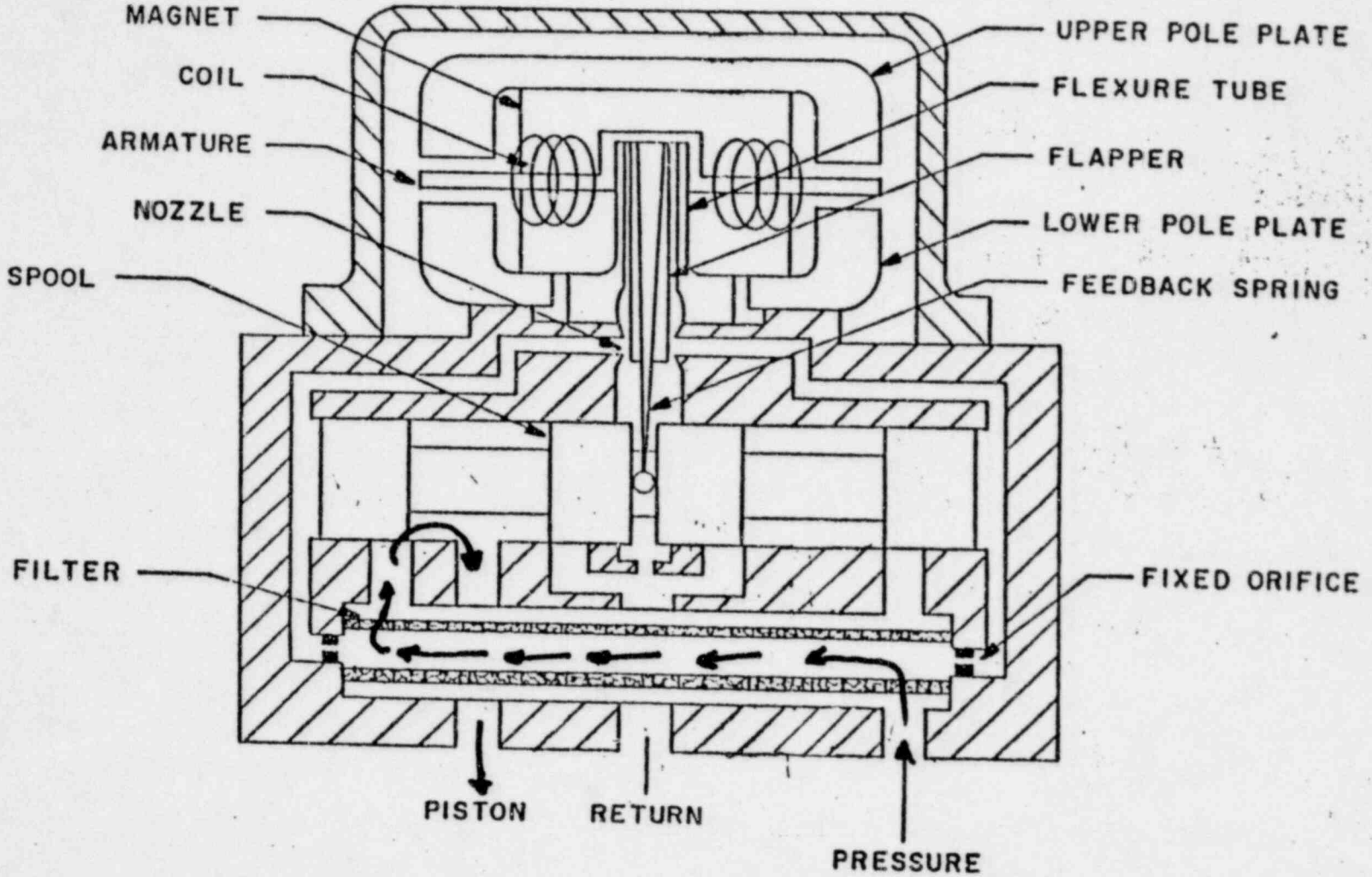

Figure 3A

SERVO CONTROL VALVE

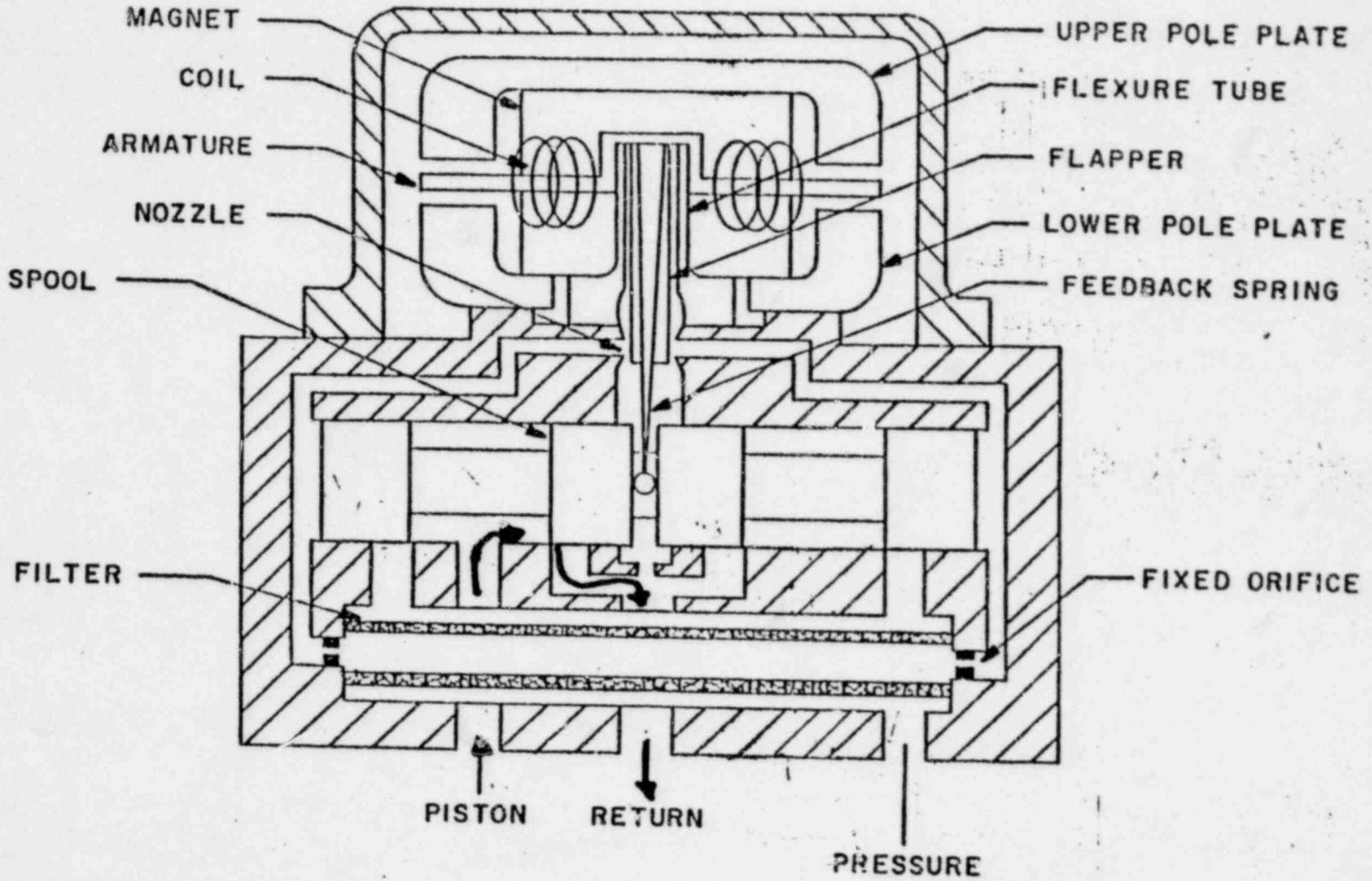

Figure 3B

EMERGENCY TRIP AND AUXILIARY GOVERNOR SYSTEM

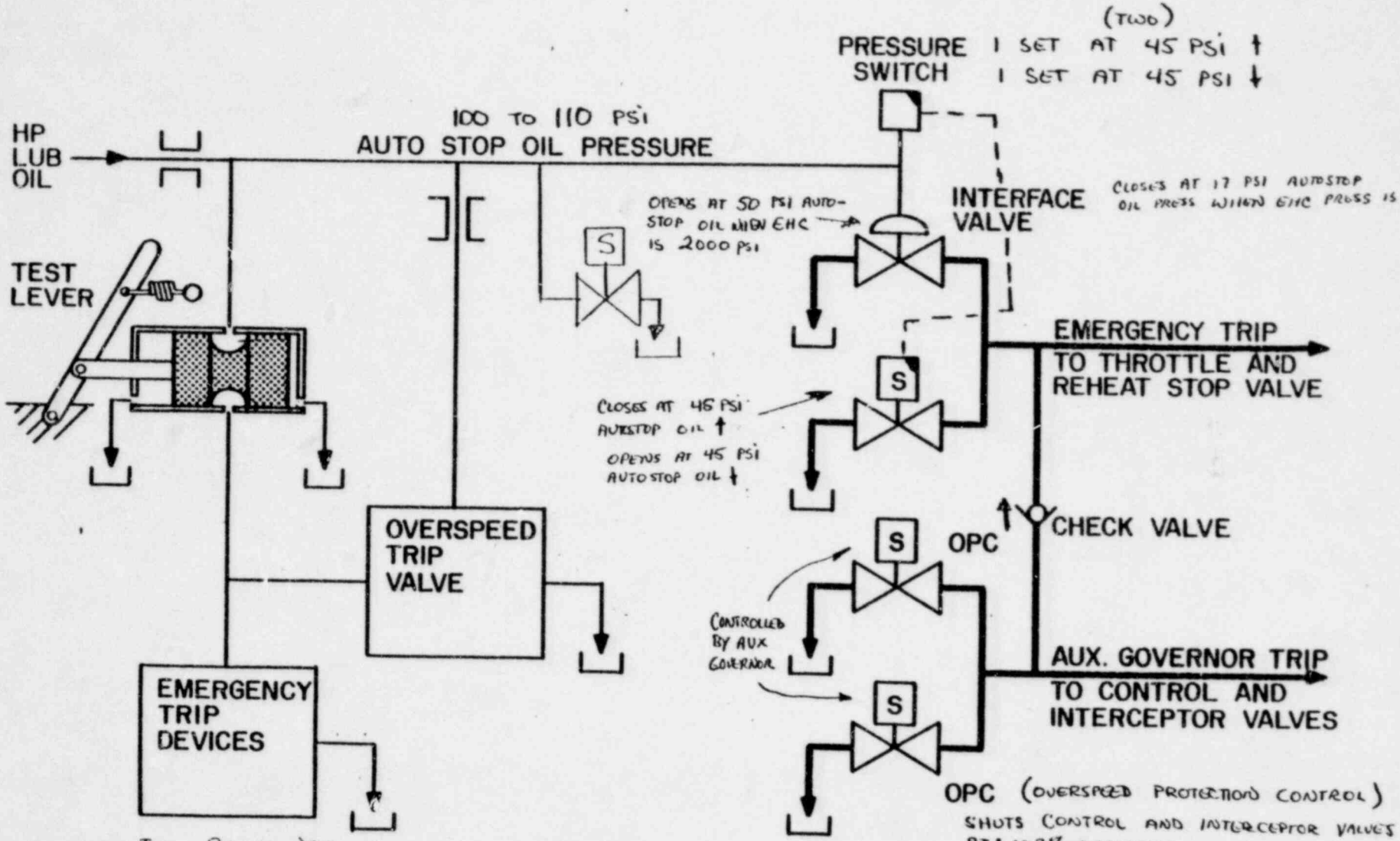

Figure 4

FIGURE 5

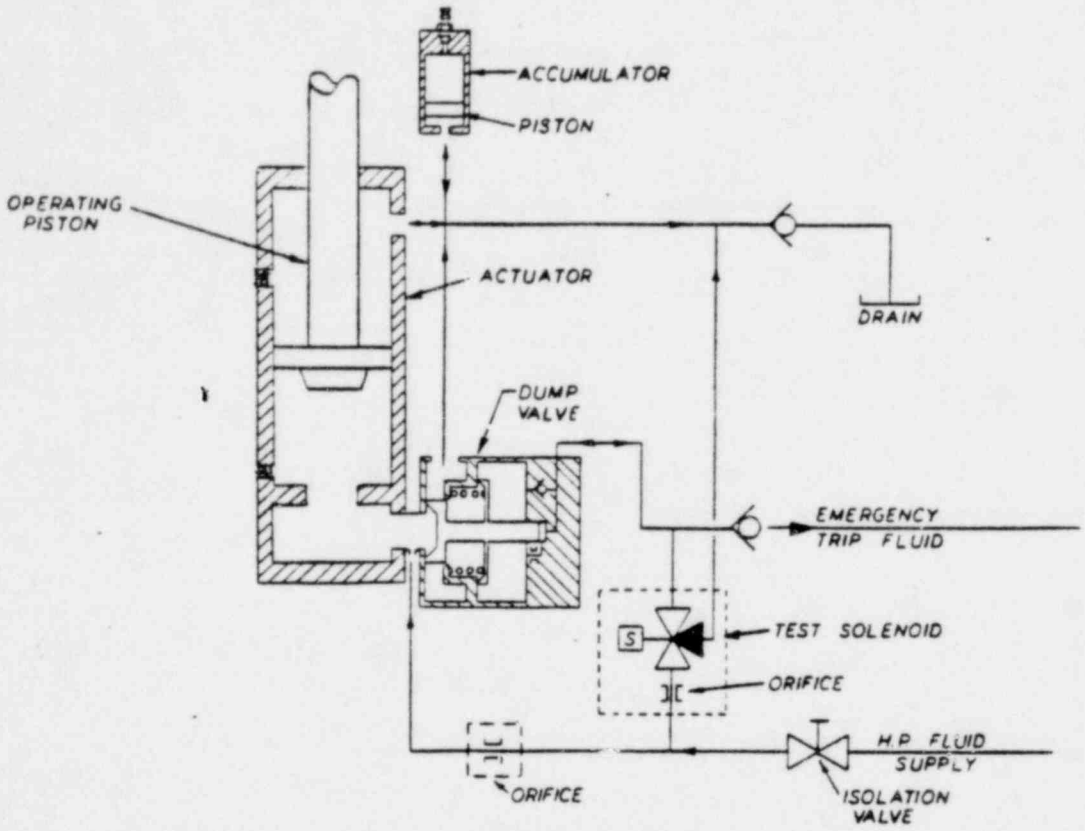

PUSH TYPE ACTUATOR FOR REHEAT STOP & INTERCEPTOR NUCLEAR VALVES

Figure 6A

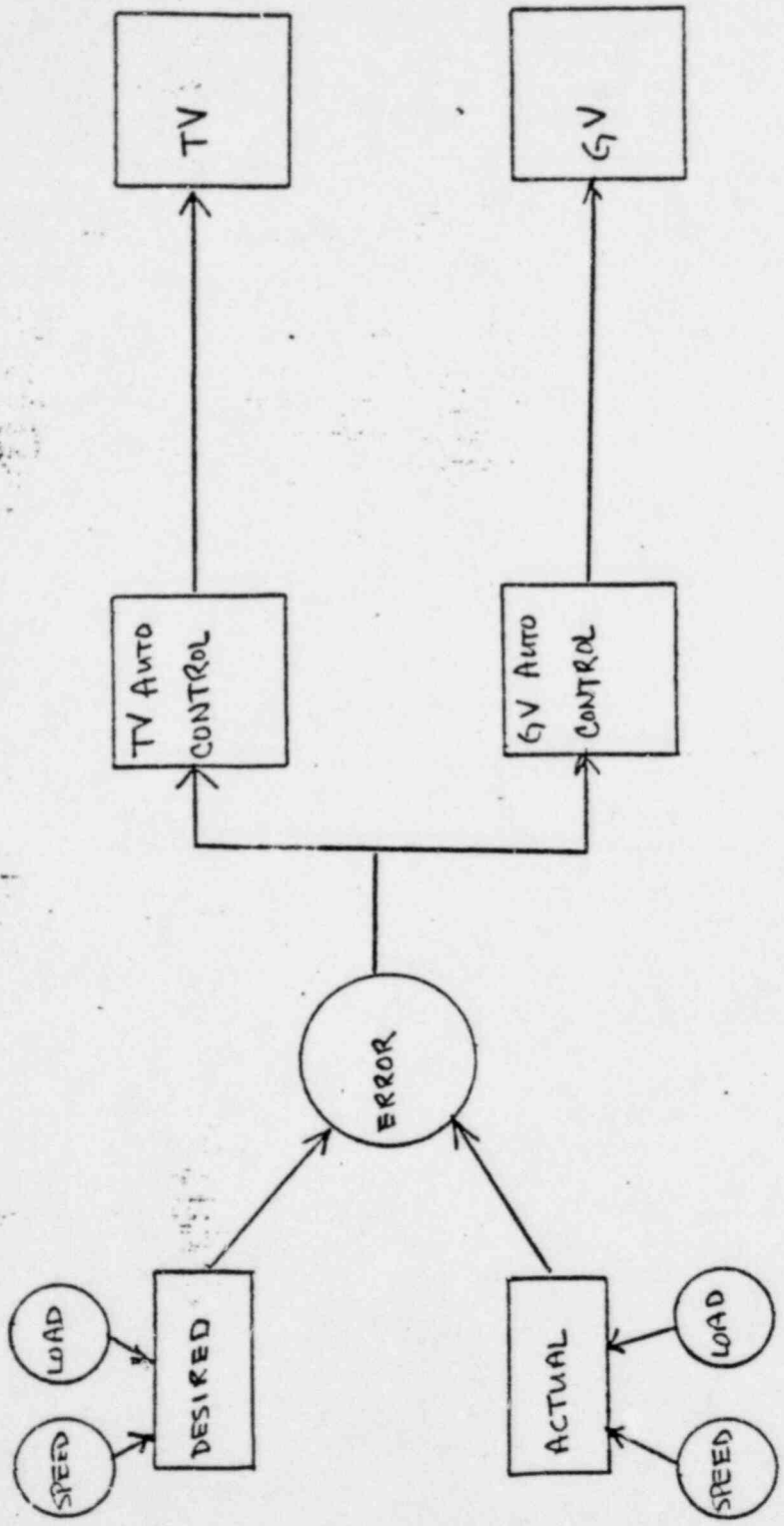
SPEED
LOAD
DESIRED
ACTUAL
SPEED
LOAD
ERROR
TV AUTO CONTROL
GV AUTO CONTROL
TV
GV

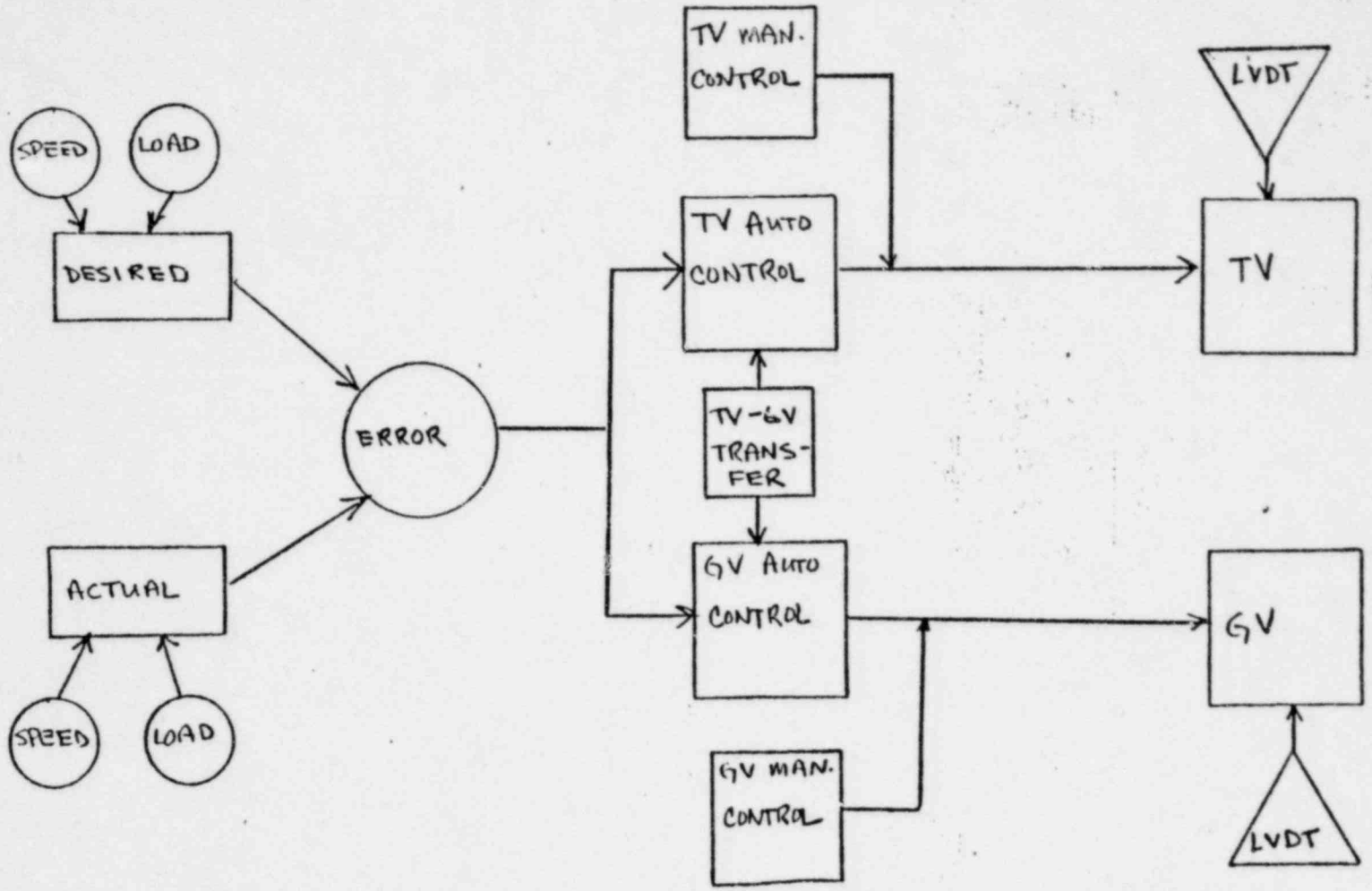
SPEED
LOAD
DESIRED
ACTUAL
SPEED
LOAD
ERROR
TV MAN. CONTROL
TV AUTO CONTROL
TV-GV TRANS-FER
GV AUTO CONTROL
GV MAN. CONTROL
LVDT
TV
GV
LVDT

FIGURE 6B

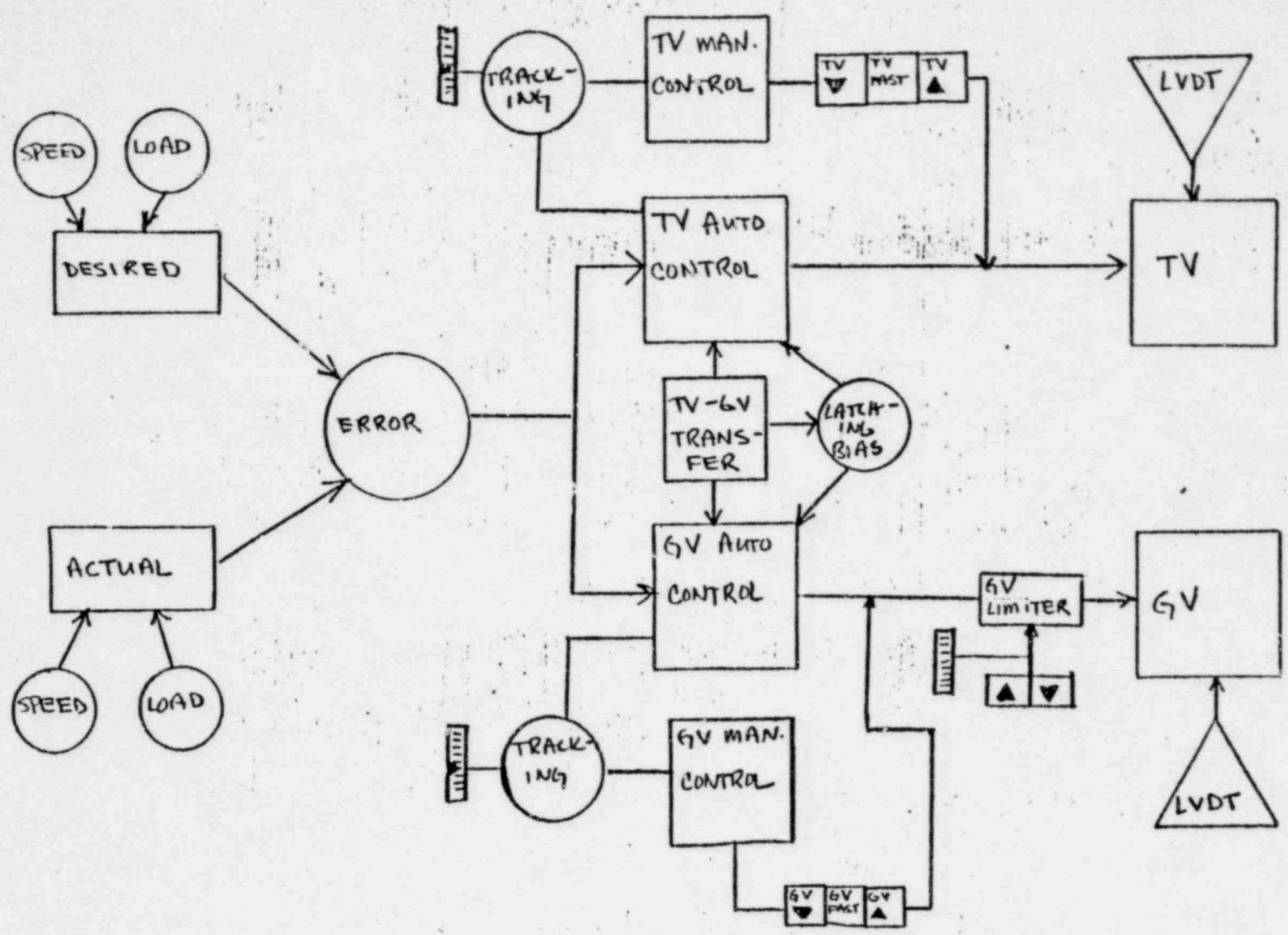
SPEED
LOAD
DESIRED
ACTUAL
SPEED
LOAD
ERROR
TRACK-ING
TV MAN. CONTROL
TV
TV FAST
TV
LVDT
TV AUTO CONTROL
TV
TV-GV TRANS-FER
LATCH-ING BIAS
GV AUTO CONTROL
GV LIMITER
GV
TRACK-ING
GV MAN. CONTROL
GV
GV FAST
GV
LVDT

FIGURE 6a

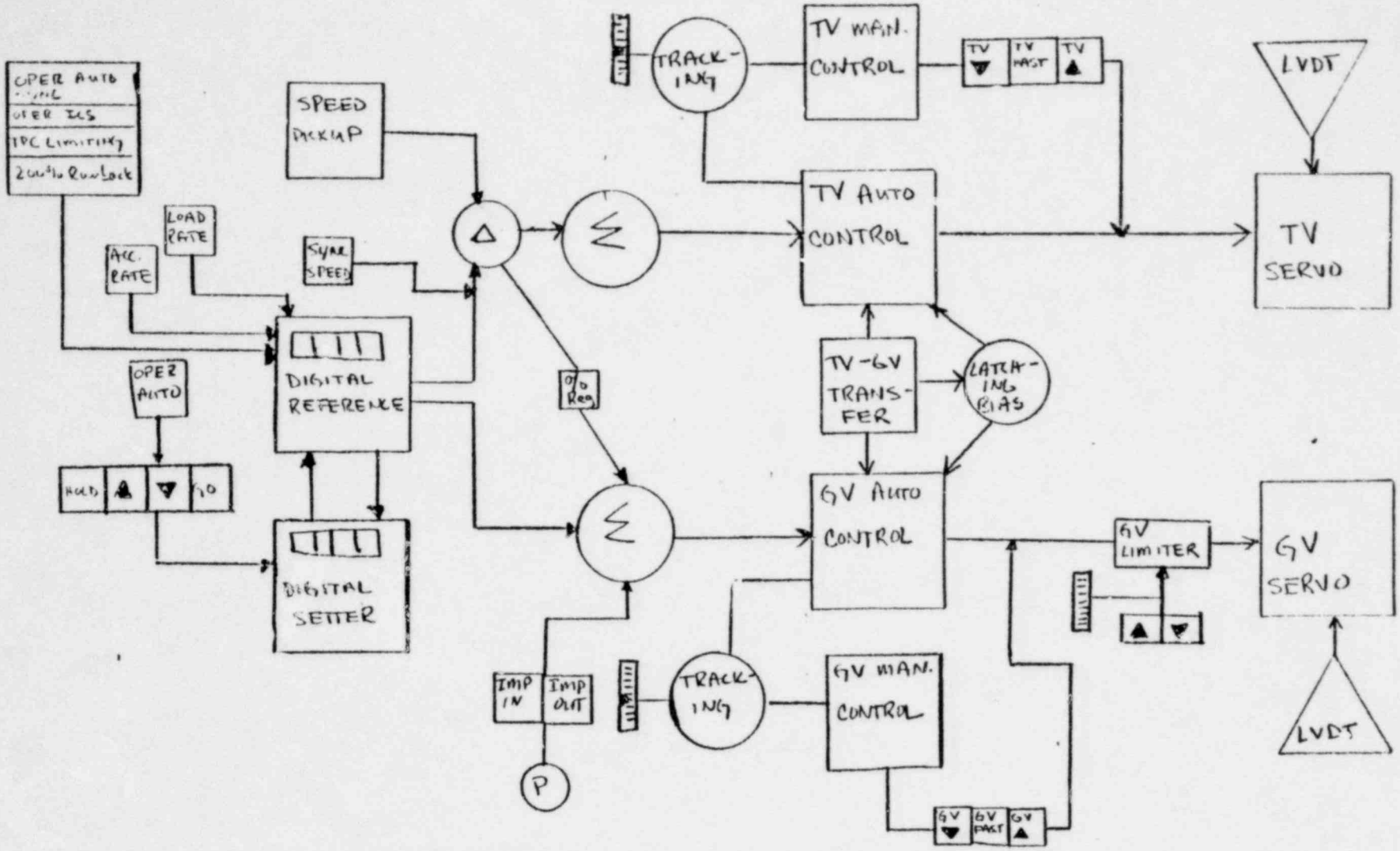
OPER AUTO
OPER ICS
IPC LIMITING
2 out of 3 Runback
SPEED PICKUP
LOAD RATE
ACC. RATE
SYNC SPEED
DIGITAL REFERENCE
OPER AUTO
HOLD
DIGITAL SETTER
% Rev
IMP IN
IMP OUT
P
TRACK-ING
TV MAN. CONTROL
TV
TV FAST
TV
TV AUTO CONTROL
TV-GV TRANS-FER
LATCH-ING BIAS
GV AUTO CONTROL
GV LIMITER
TRACK-ING
GV MAN. CONTROL
GV
GV FAST
GV
LVDT
TV SERVO
GV SERVO
LVDT

FIGURE 6a

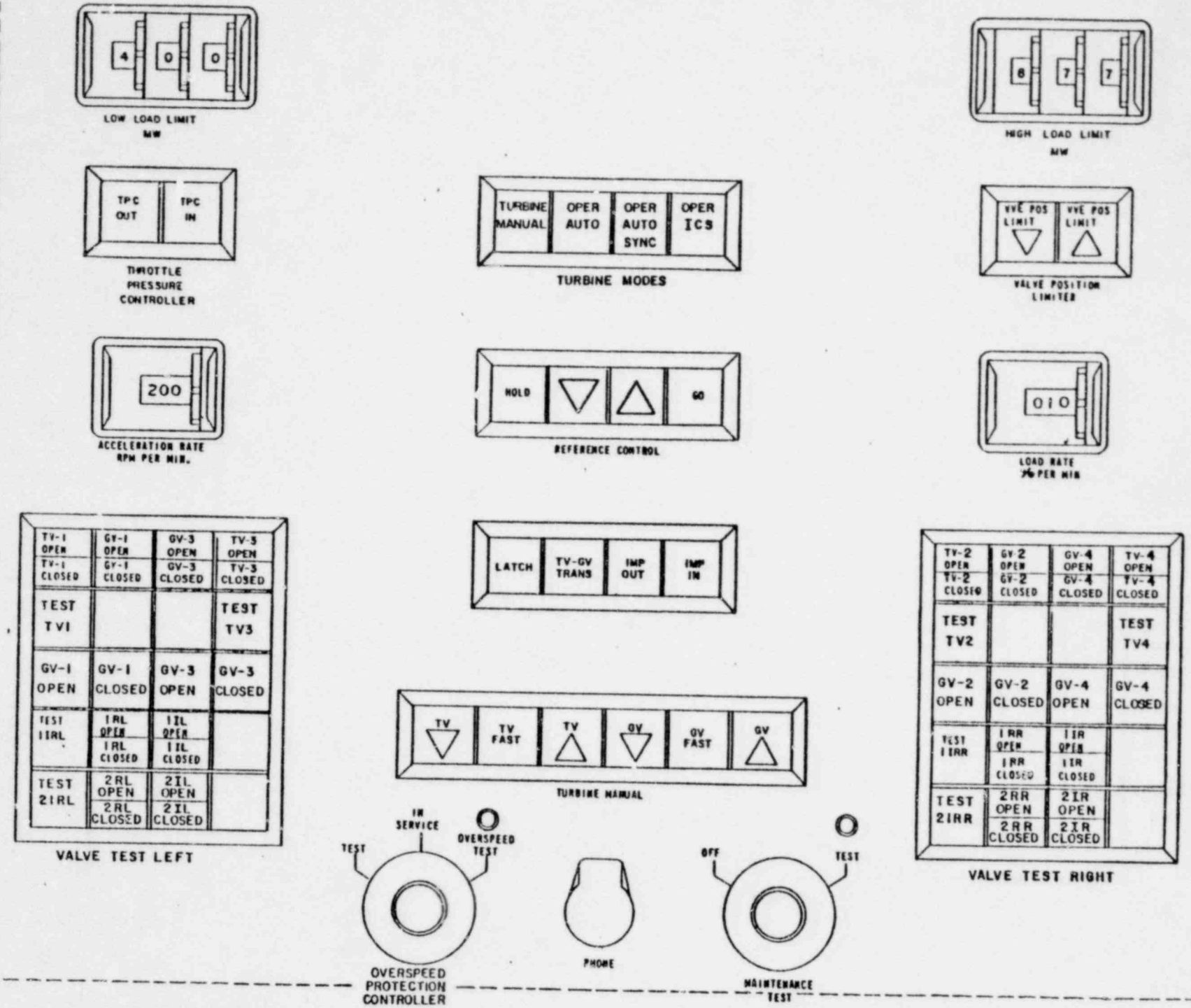
4 0 0
LOW LOAD LIMIT
MW
8 7 7
HIGH LOAD LIMIT
MW
TPC OUT
TPC IN
THROTTLE PRESSURE CONTROLLER
TURBINE MANUAL
OPER AUTO
OPER AUTO SYNC
OPER ICS
TURBINE MODES
VVE POS LIMIT
VVE POS LIMIT
VALVE POSITION LIMITER
200
ACCELERATION RATE
RPM PER MIN.
HOLD
GO
REFERENCE CONTROL
0 0
LOAD RATE
% PER MIN
LATCH
TV-GV TRANS
IMP OUT
IMP IN
TV-1 OPEN
TV-1 CLOSED
GV-1 OPEN
GV-1 CLOSED
GV-3 OPEN
GV-3 CLOSED
TV-3 OPEN
TV-3 CLOSED
TEST TV1
TEST TV3
GV-1 OPEN
GV-1 CLOSED
GV-3 OPEN
GV-3 CLOSED
TEST 1RL
1RL OPEN
1RL CLOSED
1IL OPEN
1IL CLOSED
TEST 21RL
2RL OPEN
2RL CLOSED
2IL OPEN
2IL CLOSED
VALVE TEST LEFT
TV
TV FAST
TV
GV
GV FAST
GV
TURBINE MANUAL
TV-2 OPEN
TV-2 CLOSED
GV-2 OPEN
GV-2 CLOSED
GV-4 OPEN
GV-4 CLOSED
TV-4 OPEN
TV-4 CLOSED
TEST TV2
TEST TV4
GV-2 OPEN
GV-2 CLOSED
GV-4 OPEN
GV-4 CLOSED
TEST 1RR
1RR OPEN
1RR CLOSED
1IR OPEN
1IR CLOSED
TEST 21RR
2RR OPEN
2RR CLOSED
2IR OPEN
2IR CLOSED
VALVE TEST RIGHT
TEST
IN SERVICE
OVERSPEED TEST
OVERSPEED PROTECTION CONTROLLER
PHONE
OFF
TEST
MAINTENANCE TEST

FIGURE 7A

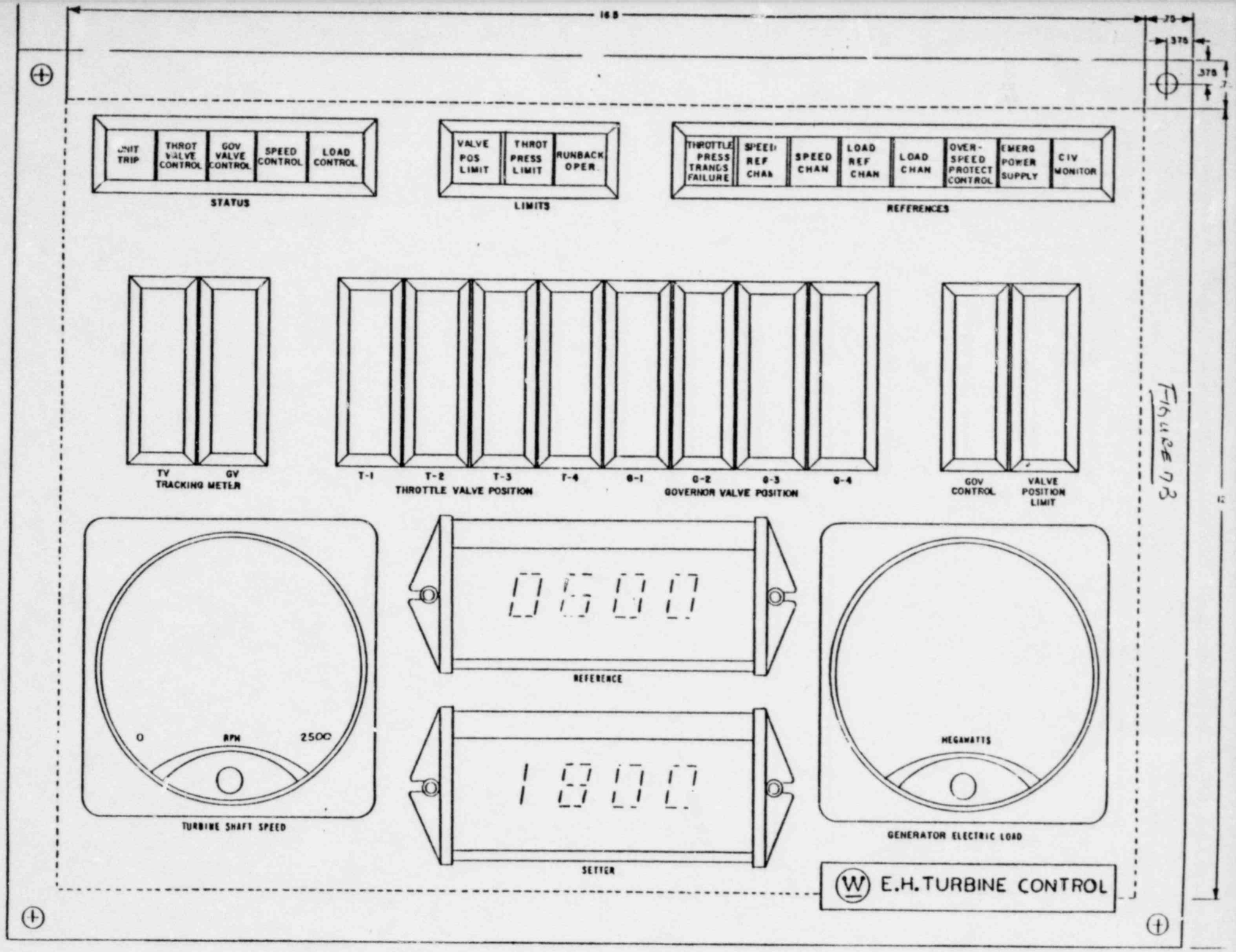
16.5
.75
.375
.375
UNIT TRIP
THROT VALVE CONTROL
GOV VALVE CONTROL
SPEED CONTROL
LOAD CONTROL
STATUS
VALVE POS LIMIT
THROT PRESS LIMIT
RUNBACK OPER.
LIMITS
THROTTLE PRESS TRANDS FAILURE
SPEED REF CHAN
SPEED CHAN
LOAD REF CHAN
LOAD CHAN
OVER-SPEED PROTECT CONTROL
EMERG POWER SUPPLY
CIV MONITOR
REFERENCES
TV
GV
TRACKING METER
T-1
T-2
T-3
T-4
THROTTLE VALVE POSITION
G-1
G-2
G-3
G-4
GOVERNOR VALVE POSITION
GOV CONTROL
VALVE POSITION LIMIT
0
RPM
2500
TURBINE SHAFT SPEED
0600
REFERENCE
1800
SETTER
MEGAWATTS
GENERATOR ELECTRIC LOAD
E.H. TURBINE CONTROL

FIGURE 7.3

AUTOMATIC MODE LOAD CONTROL - GOV. VALVE CONTROL

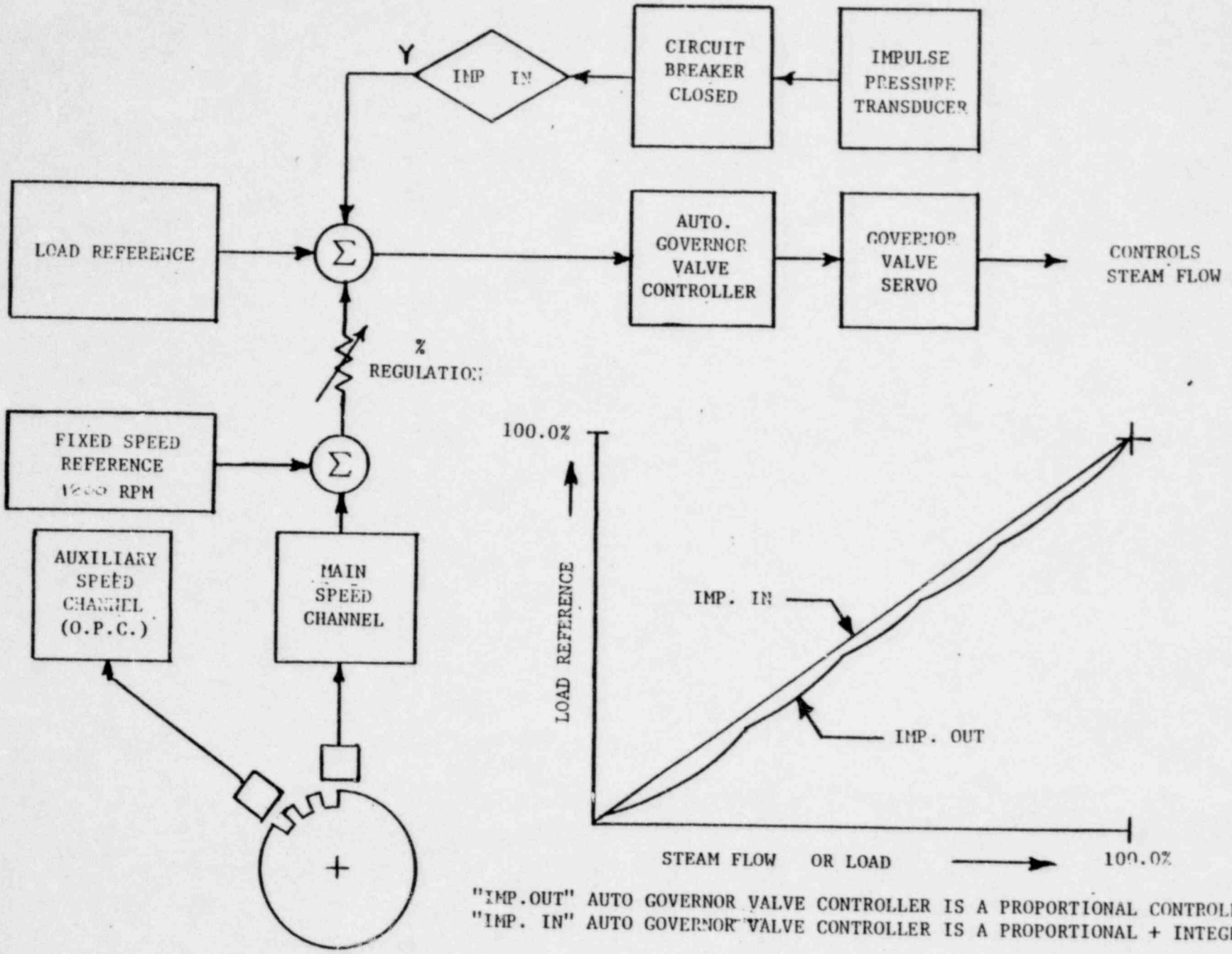

"IMP.OUT" AUTO GOVERNOR VALVE CONTROLLER IS A PROPORTIONAL CONTROLLER.
"IMP. IN" AUTO GOVERNOR VALVE CONTROLLER IS A PROPORTIONAL + INTEGRAL CONTROLLER.

FIGURE 8

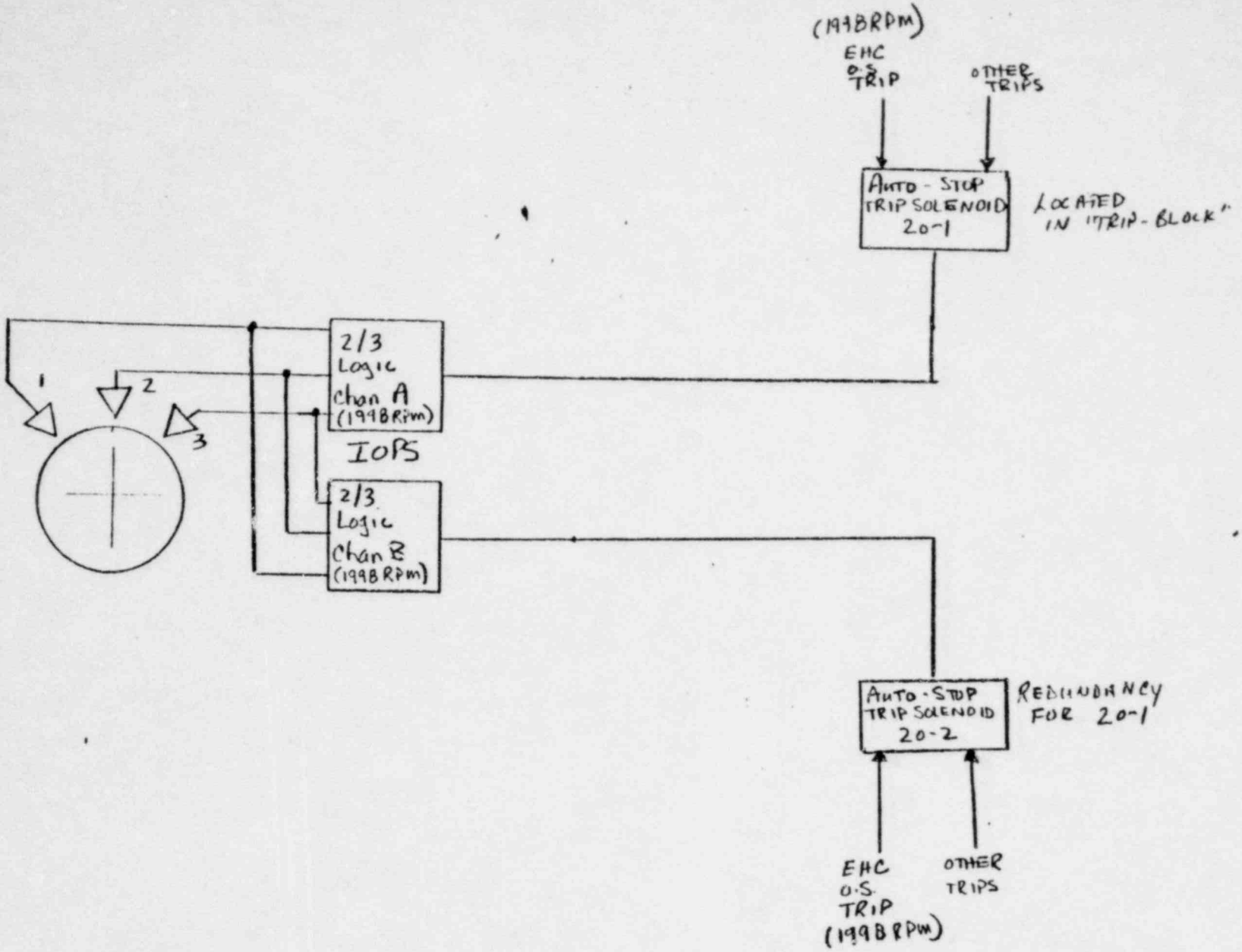

I.O.P.S.

FIGURE 9

GENERATOR EXCITATION AND CONTROL

I. Introduction

The Westinghouse "Brushless Excitation" system begins with a Permanent Magnet Generator (PMG) mounted on the end of the main generator shaft. The PMG output is sent to the voltage regulator. The regulator allows manual (Base Adjust) or automatic (Voltage Adjust) control. It includes the Trinistat Power Amplifier and it's associated protective, logic and firing circuits. The Trinistat Power Amplifier rectifies and regulates the output of the PMG. The amplifier's output is in turn sent to the field of the Exciter Generator, which is also mounted on the main shaft. Exciter generator output is supplied to the Main Generator field through a rotating rectifier without leaving the main shaft.

II. Detailed Description

A. The PMG consists of a permanent magnet field which rotates within the stationary armature. The armature is wound for high frequency output. The PMG is rated at 36 KW at 1800 RPM,120V, 3Ø , 420 HZ AC. PMG output is fed to the Trinistat Power Amplifier and Trinistat Firing Circuits through breaker 41 (refer figure 1).

B. The Trinistat Power Amplifier is a 3Ø full wave bridge rectifier utilizing SCR's instead of conventional diodes. The SCR's will pass current only after they have received a gate or firing pulse. Thus, the amplifier output is regulated by varying the point during the AC sine wave at which the firing pulse is applied. If the pulse is applied early in the input sine wave, almost the entire wave will be passed through. If the delay angle is increased so the pulse is applied later, only a small portion of the wave will be passed and the amplifier output will be decreased The point at which the firing pulse is applied is determined in the Trinistat Firing Circuits by signals from either the Base Adjust (manual) control or the Voltage Adjust (automatic) control.

C. The Base Adjust control allows the operator to set the delay angle of the firing pulses manually. However, this system receives no feedback or comparison signal from actual Main Generator voltage output, and should therefore not be used when the unit is operating under load.

D. The automatic voltage regulator (Volts Adjust Control) also allows the operator to set in a desired delay angle. However, this signal is modified automatically according to Main Generator output voltage to maintain a stable output and minimize voltage transients. Generator output voltage and current are continuously monitored and fed back into the automatic regulation logic circuits. These signals are compared to desired values and an error signal is developed. This error signal then modifies the firing pulse delay angle to keep the Main Generator output conditions at desired values.

E. To avoid transients, care must also be taken to match automatic regulator output to manual (Base Adjust) output when shifting from auto to manual control or vice versa. To accomplish this, either the Volts Adjust or Base Adjust control on the console (whichever is not in service) should be used to zero the Reg. Or Balance Meter (Reg. Output Meter on figure 1). This will assure that both the automatic and manual control systems are operating with the same pulse delay angle.

F. Because of the multi-phase, high frequency input to the Trinistat Power Amplifier (PMG output =3Ø,420HZ), the regulated, rectified output of the amplifier is relatively smooth and does not require additional filtering. Instead, the Amplifier output is sent directly to the Exciter Generator field.

The Exciter Generator is a stationary field-rotating armature AC generator mounted on the main shaft. It is rated at 1800 RPM, 4000 KW, 535 Volts, 7477 Amps, 3Ø, 420 HZ. Its actual output will be determined by the strength of the applied field, which is determined in the Trinistat Power Amplifier by the delay angle of the SCR firing pulses. The Exciter Generator output is sent to the Rotating Diode Wheel.

G. The Rotating Diode Wheel is also mounted on the main shaft. It is a full wave rectifier consisting of 2 sections [one (+), one (-)] with a total of 96 diodes (16 diodes per phase per polarity). This wheel supplies the dc field current to the Main Generator through bus bars embedded in the shaft. The wheel's dc output is smooth enough to eliminate the need for additional filtering because of the high frequency input.

III. Operation During Transients

A. The WTA Regulator is capable of automatically compensating for transients in terminal voltage and returning generator output to normal.

1. If generator terminal voltage should increase, this condition will be sensed and forwarded to the regulator logic circuits. This causes an error signal which tends to buck (oppose) the normal logic circuit output to the Trinistat Firing Circuits (refer figure 2, pt. A').

The decreased input to the firing circuit (B') will cause an [illegible]ase in the output (firing) pulse delay angle. With the delay angle increased the SCR's will fire later, allowing a smaller portion of the PMG ac output to pass and resulting in a decreased output from the Trinistat Power Amplifier.

Since the amplifier output is used to supply the Exciter Generator field, as amplifier output drops exciter output also decreases.

Exciter Generator output is rectified and supplied to the Main Generator field. As the Main Generator field weakens, terminal voltage will also decrease until it reaches the desired value.

2. The regulator's response to an initial <u>decrease</u> in generator voltage may be analyzed similarly. This time, however, the error would boost (increase) the regulator's output to the firing circuits, resulting in a smaller delay angle for the SCR firing pulses.

IV. Protective Circuits

A. A number of protective features have been designed into the WTA regulator logic circuits. These include (refer fig. 3):

1. Excitation System Damping - to stabilize the excitation control system.
2. Reactive Current Compensator - A reactive droop system which will reduce excitation when reactive load increases.
3. Volts/Hertz Limiter - to regulate the ratio of generator volts to frequency, preventing overheating in the generator & main transformer.
4. Minimum Excitation Limiter - to prevent under excitation by maintaining the generator above minimum KVA characteristics.

A Signal Mixer receives inputs from the Minimum Excitation Limiter and the Error Voltage Detector set by the Voltage Adjuster). The most positive of these two signals will then be used to control the SCR firing pulses. A negative signal from the Volts/HZ Limiter will override this, however and cause a decrease in excitation.

B. Over-excitation is also guarded against by regulator protective circuits. If a preset excitation limit is exceeded, the WTA voltage regulator will automatically be tripped (open "90" contacts - figure 1) and voltage control will revert to manual (Base Adjust). Again, there should be no further large transient due to the Base Adjuster control being prepositioned to the desired setting (zero Reg. Balance Meter).

If, however, the over excitation condition continues after the regulator has switched to manual the entire excitation system (by breaker 41 - figure 1) and generator will trip.

V. Generator Operation

A. Startup

1. Before rolling the turbine with steam:

a. Check generator field for ground by placing ground detection switch in TEST.

b. Check Base Adjuster at NO-LOAD preposition (amber light above switch).

c. Close generator breaker no-load disconnects

(1.) Depress CLOSE SELECT (red PB) for appropriate set of disconnects.

(2.) Verify CLOSE SELECT & POINT SELECT lights are lit for that set of disconnects.

(3.) Place appropriate disconnect control switch to CLOSE and release.

d. Repeat c. for the other set of disconnects.

2. When the turbine is at or near synchronous speed:

a. Close the field breaker (brkr 41)

(1.) The generator is now under manual (Base Adjust) control.

b. Verify the absence of alarms and the operation of the Trinistat Firing Modules and Power Amplifier.

c. Slowly raise the Base Adjust control until the generator terminal voltage is 22KV.

d. Place the automatic regulator in service

(1.) Place the Voltage Regulator/Cutoff Switch in TEST.

(2.) Zero the Exciter Balance Meter using the Voltage Adjuster control switch.

(a.) This minimizes any transient when shifting from manual to auto mode or vise versa.

(3.) Place the Regulator/Cutoff Switch to ON

(a.) The regulator is now under automatic (Voltage Adjuster) control.

B. Synchronizing

1. Paralleling the main generator with the 500 KV distribution system may be done either manually or automatically. While both methods are outlined here, the manual procedure will most often be used.

2. Manual

   a. Place the appropriate SYNCH. Switch in MANUAL.

   b. Depress the CLOSE SELECT push button for that generator breaker.

   c. Verify the red CLOSE SELECT and yellow POINT SELECT indicators are lit.

      (1.) The select/check back relaying scheme for manual paralleling consists of 4 sets of push button/indicators on Panel 6 - one set for each generator breaker and one set for each pair of generator breaker disconnects. There are 4 PB's in each set - CLOSE SELECT, OPEN SELECT, POINT SELECT and CANCEL. The operator first depresses the PB corresponding to the desired operation (OPEN or CLOSE SELECT - a particular components set of PB's).

      When that PB's backlight is energized, it indicates the proper relay scheme has been established to allow that operation. The POINT SELECT PB should also light, indicating that the operator does in fact have control of that component. A 10 second timer will cancel the whole operation if the breaker is not closed in the time span. To allow the operator to trim the generator with the bus, the CANCEL pushbutton is now depressed. This will cancel the relaying scheme, but leave the SYNC SCOPE and VOLTMETERS energized.

d. Verify the VALID DATA light is energized

(1.) This indicates the synchroscope, synch lights and "Running" and "Incoming" bus volt meters are displaying valid information for the selected operation.

e. Trim unit speed so the synchroscope in rotating slowly in the FAST direction.

f. Match "Running" and "Incoming" bus voltages using the Voltage Adjuster control.

g. When the SYNC SCOPE is 3-5 min. before noon, press CLOSE SELECT and within 10 secs., close the breaker.

(1.) The breaker control switch must be placed in the CLOSE position <u>and</u> released before the close command will be transmitted.

h. Place the SYNCH switch for the second generator breaker in MANUAL.

i. Depress & release CLOSE SELECT PB for this breaker.

j. Verify synchronization.

k. Close the second generator breaker.

3. Automatic

a. Select OP AUTO SYNCH mode on the turbine control panel.

b. Place the SYNCH switch for the first breaker in AUTO.

c. Place that breaker's control switch to CLOSE and release.

(1.) The generator will be synchronized automatically and the selected breaker will close.

(2.) Upon closure of the first breaker, turbine control reverts to OPERATOR AUTO.

d. Close the second breaker using the procedure described under Manual (2.h - 2.k.).

C. Normal Operation

1. MW load will be determined by varying turbine speed.
2. MVAR loading will be controlled by varying the Voltage Adjuster control setting.
3. The Regulator Balance Meter should be periodically zeroed using the Base Adjuster control.
4. The diode fuses on the exciter "rotating diode wheel" should be checked daily.
   a. A blown fuse will be marked by a leaf type indicator pivoting outward from the wheel. The associated phase can be determined from the fuse fastening bolts, which are color coded (A-red, B-white, C-blue). The opposite polarity sections of the diode wheel are located at opposite ends of the wheel.
   b. If 2 fuses per phase of one section (polarity) are blown, plans should be made to take the generation off-line & replace the affected diodes.
   c. If 3 fuses per phase of one polarity are blown, the generator must be taken off-line and the diodes replaced.
5. If it becomes necessary to vary the Voltage Adjuster setting, do so in small increments. "Bump" the control switch and allow MW and MVAR's to stabilize before bumping again.
6. If over excitation should occur, the Base Adjuster will automatically be set to the full load preposition and the automatic regulator tripped. The generator and exciter will trip if over excitation continues.
   a. It MUST be remembered that the Base Adjuster WILL NOT automatically compensate for fluctuations in load or system voltage. The generator must be continuously monitored to maintain the proper output voltage and the proper MW/MVAR relationship for a 0.9 power factor (MVAR $\approx$ 0.5xMW) when operating in this mode.

D. Shutdown

1. When unit load is 5% trip the generator breakers.
   a. Depress OPEN SELECT PB for the first breaker.
   b. Verify OPEN SELECT & POINT SELECT lights.
   c. Place the breaker control switch to TRIP & release.
   d. Repeat a-c for the second breaker.
2. Trip the generator field breaker (bkr. 41).
   a. The unit automatically reverts to Base Adjust (manual) control when restarted.

VI Summary

The Westinghouse brushless excitation system uses a shaft-mounted PMG to supply the exciter generator field. The PMG output is sent through a power amplifier where it is rectified and controlled by regulating the firing of SCR's. By controlling the field applied, the exciter generator's output is also controlle This output is sent directly through a shaft mounted rectifier to the main generator field. Varying this field strength varies the generation terminal voltage.

The regulator may be operated in either the manual or the automatic mode. However, the manual mode provides no automatic compensation for changes in load or system voltage. To prevent improper excitation, the manual mode is not recommended when the unit is operating under load.

Improper excitation is prevented in the automatic mode by a number of protective circuits. Under excitation is guarded against by imposing a minimum excitation limit. Over excitation, should it occur, will return the regulator to manual. If the over excited condition continues with the regulator in manual, the generator and excitation system will trip.

The control settings of the manual and automatic regulators should be matched periodically to avoid transients when shifting from one mode to the other. Paralleling of the main generator with the 500 kV distribution system may also be done either manually or automatically.

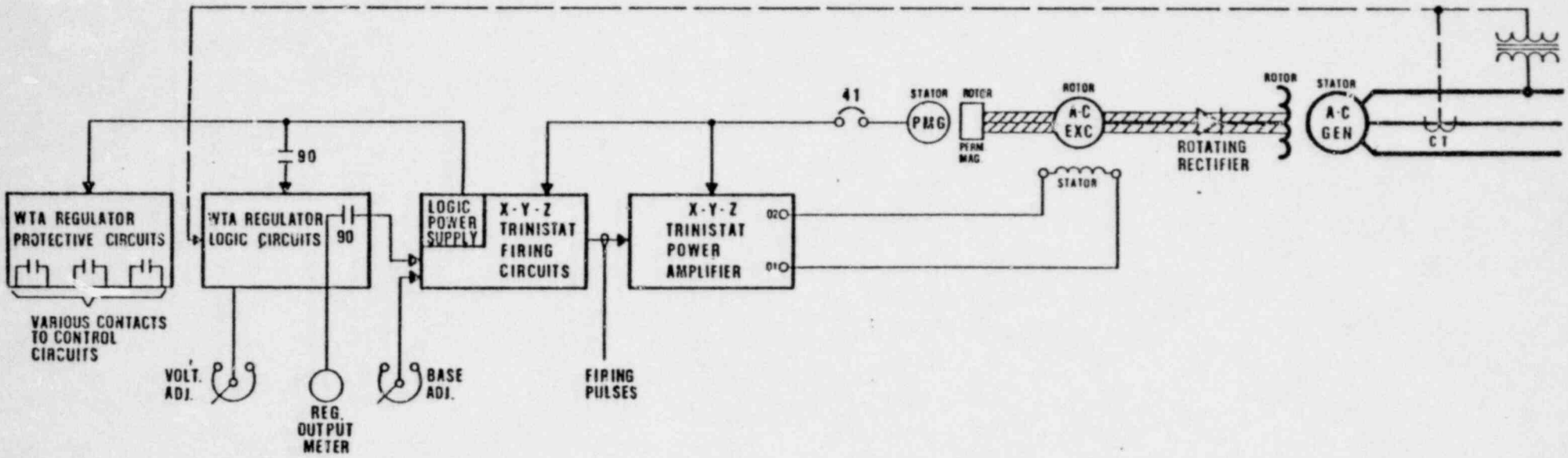
WTA REGULATOR PROTECTIVE CIRCUITS
VARIOUS CONTACTS TO CONTROL CIRCUITS
WTA REGULATOR LOGIC CIRCUITS
90
90
VOLT. ADJ.
REG. OUTPUT METER
BASE ADJ.
LOGIC POWER SUPPLY
X-Y-Z TRINISTAT FIRING CIRCUITS
FIRING PULSES
X-Y-Z TRINISTAT POWER AMPLIFIER
02
01
STATOR
41
STATOR
PMG
ROTOR
PERM MAG
ROTOR
A-C EXC
ROTATING RECTIFIER
ROTOR
STATOR
A-C GEN
CT

FIGURE 1

FIGURE 2

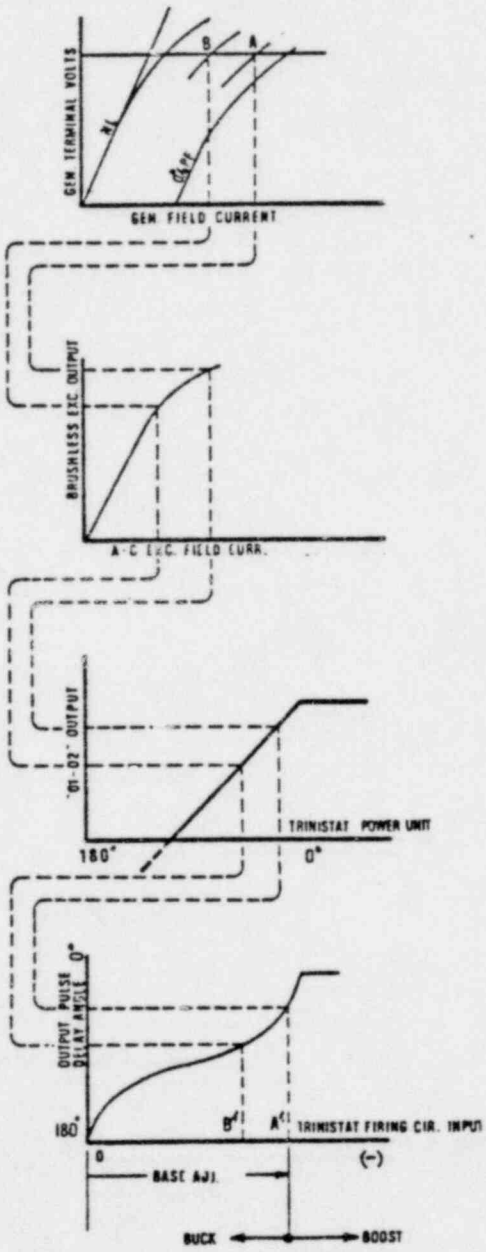

REGULATOR

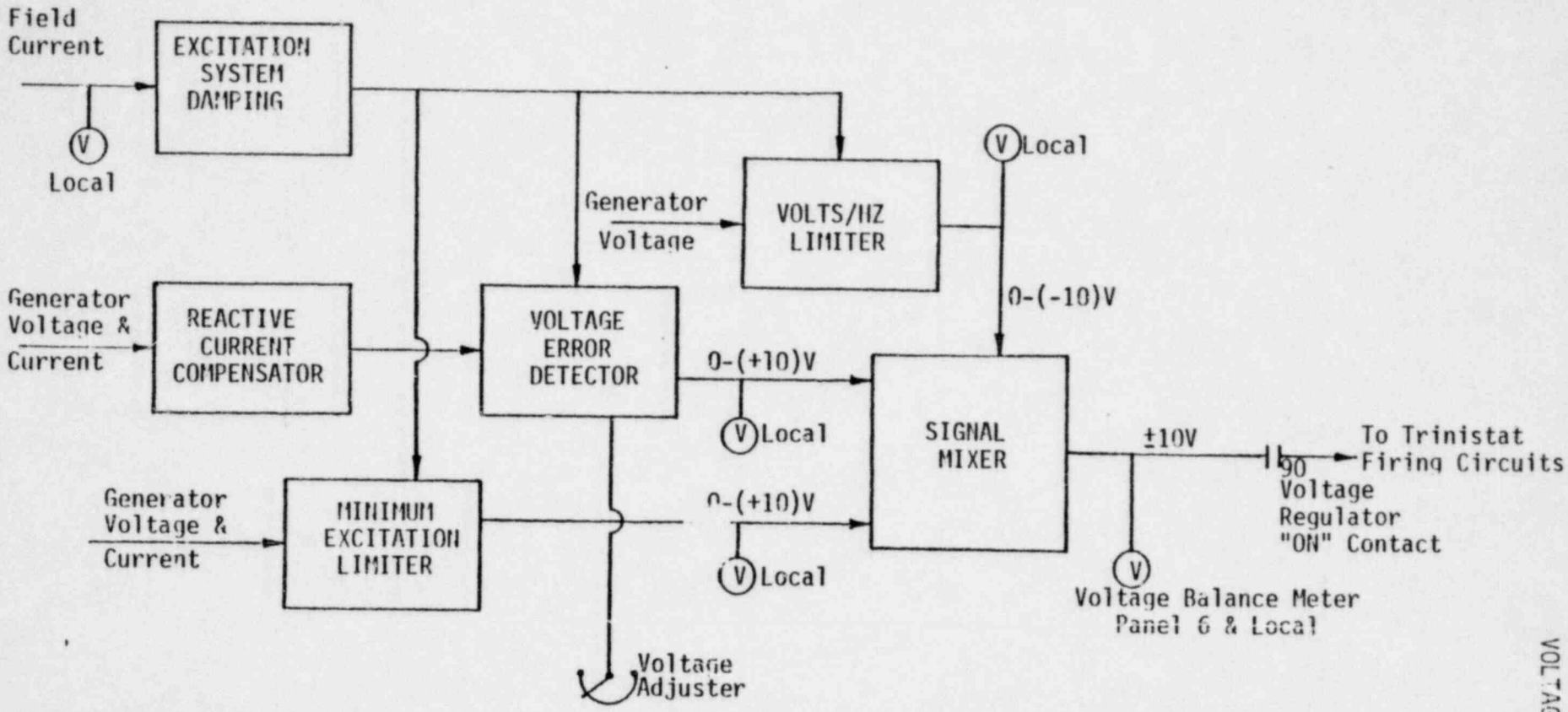

1. REACTIVE CURRENT COMPENSATOR: Add current to voltage - makes voltage look less than it actually is to the Voltage Error Detector - thereby reducing excitation if reactive load increases.
2. VOLTAGE ERROR DETECTOR: Compares voltage to setting of Voltage Adjuster and sends error signal to Signal Mixer. Output is normally zero.
3. MINIMUM EXCITATION LIMITER: Senses voltage and current and provides a proportional signal to the Signal Mixer. Output is normally positive.
4. VOLTS/HERTZ LIMITER: Maintains generator voltage and frequency within certain limits to prevent iron saturation (overheating) of generator and main transformer. Output is normally zero.
5. SIGNAL MIXER: Selects the most positive signal from 2 or 3 and provides a (-) signal to the firing circuits. A (-) signal from 4 will override signals from 2 and 3 to provide a (+) signal to the firing circuits.

VOLTAGE REGULATOR BLOCK DIAGRAM
FIGURE 3

AUXILIARY EQUIPMENT CONTROL

I. Moisture Separator Reheaters (MSR's)

A. Function - MSR's are provided to dry and reheat H.P. Turbine exhaust steam on its way to the L.P. Turbines. The advantages of this process include:

1. Reduced moisture content. Droplets of water in steam increase energy losses, chemical carry over, and blade erosion.
2. Reduced turbine size - by reheating (superheating) L.P. turbine supply steam, we can reduce turbine size and still develop the MW we want. (eg. 2 L.P.'s instead of 3).

B. Operation (figure 1)

1. H.P. Turbine Exhaust steam enters the lower portion of the MSR. It is then distributed evenly through the chevron separators, over the 1st and 2nd stage heating bundles, and out the top.
2. Moisture separated from the steam collect in a well at the bottom of the unit. From here, it gravity drains via a level control valve to the Heater Drain Tank (HD-T-1). In the event of a malfunction in the normal drain path, the resultant high water level will actuate an alternate drain path to the main condenser. This alternate path is very fast due to the high DP between MSR and condenser.
3. MSR 1st stage reheating steam is supplied from the H.P. Turbine 3rd stage extraction steam line. As a result, the amount, pressure, and temperature of this steam is a function of turbine load. As the steam enters the tube bundle, it immediately loses heat to the H.P. turbine exhaust. At some point in the U-tube, the 1st stage reheating steam will condense and collect in a drain tank beneath the MSR. Since this condensate is considerably hotter than the MSR drains, it is directed to the 3rd stage F.W. heater for additional cooling before entering the heater drain tank. A high level dump to the condenser is provided.

4. MSR 2nd stage reheating steam is supplied from the main steam system. A flow control valve is adjusted manually or automatically to yield the desired amount of reheating. The flow path for this steam is similar to the 1st stage reheating.

C. Control

1. As stated previously, all drainage from the unit is controlled by level central valves and condenser dump valves.
2. 1st stage reheating is purely a function of turbine load. (3rd stage extraction steam).
3. 2nd stage reheating is controlled by the MSR controller. (fig. 2)

D. MSR Control System

1. The MSR control system has the following control/indications in the control room. (Refer to fig. 2).

"Power ON/Comp" - energizes controller and resets reheater steam valves (MSV31A,B, MSV-37A,B) to closed.

"Ramp" - signals reheater steam valves to fully open over one hour.

"400° F" - signals reheater steam valves to raise or lower L.P. inlet steam temp to 400° F in 10 minutes time.

"HOT START" - same as 400° F except it will do it in 30 secs.

"Manual Valve Position" - gives control of all four valves to operator via manual valve position knob.

"RESET" - clears all auto signals to valves and closes them until a new mode is selected.

"#1 TEMP. #2 TEMP - steam inlet temperature for the L.P. Turbine.

"TEMP LIMIT" - red light that indicates we've reached the maximum allowable reheat temperature (525 -575 ^{o} F)

II. Extraction Steam Valves

A. Steam is extracted from the turbine after the 3rd, 8th, 10th, 11th, 13th, and 14th stages. The steam is used primarily for feed water heating. The amount of steam extracted is strictly a function of turbine load (ie, availability).

B. Valves

1. All extraction lines are fitted with stop check valves (except 3rd stage which was separate stop and check valves due to high pressures). These valves provide steam isalation for FW heaters as well as preventing water from backing up to the turbine from the heaters.

   Additionally, interlocked drain valves are provided upstream of each stop check valve to prevent water build-up in an isalated extraction line.

2. The extraction steam valves open automatically when the turbine is reset (by one master soleniod) and shut when the turbine trips. (*)

   Each upstream drain valve is interlocked with its associated extraction valve to close when the other is open, etc.

(*) This feature prevents turbine overspeed via the extraction lines in the event of a load drop.

Additionally, each extraction steam stop-check valve will shut when an excessive water level is sensed in its heater. This feature prevents water induction to the turbine via the extraction lines.

III. Turbine Drains

A. Functions - To remove moisture from HP & LP Turbine supply piping during a start up to 20% power.

- To continuously drain cross-under piping during operation above 20% power.

B. Description

1. This system is composed of several low-point drain connections on the various turbine steam supply lines.

2. A series of valves provide control of drains to the condenser. These valves are shut with one switch at 20% power.
3. Above 20% power, cross under piping drains are directed to a tank. The tank contents are piped to the condenser via a level control valve. (MS-V233).

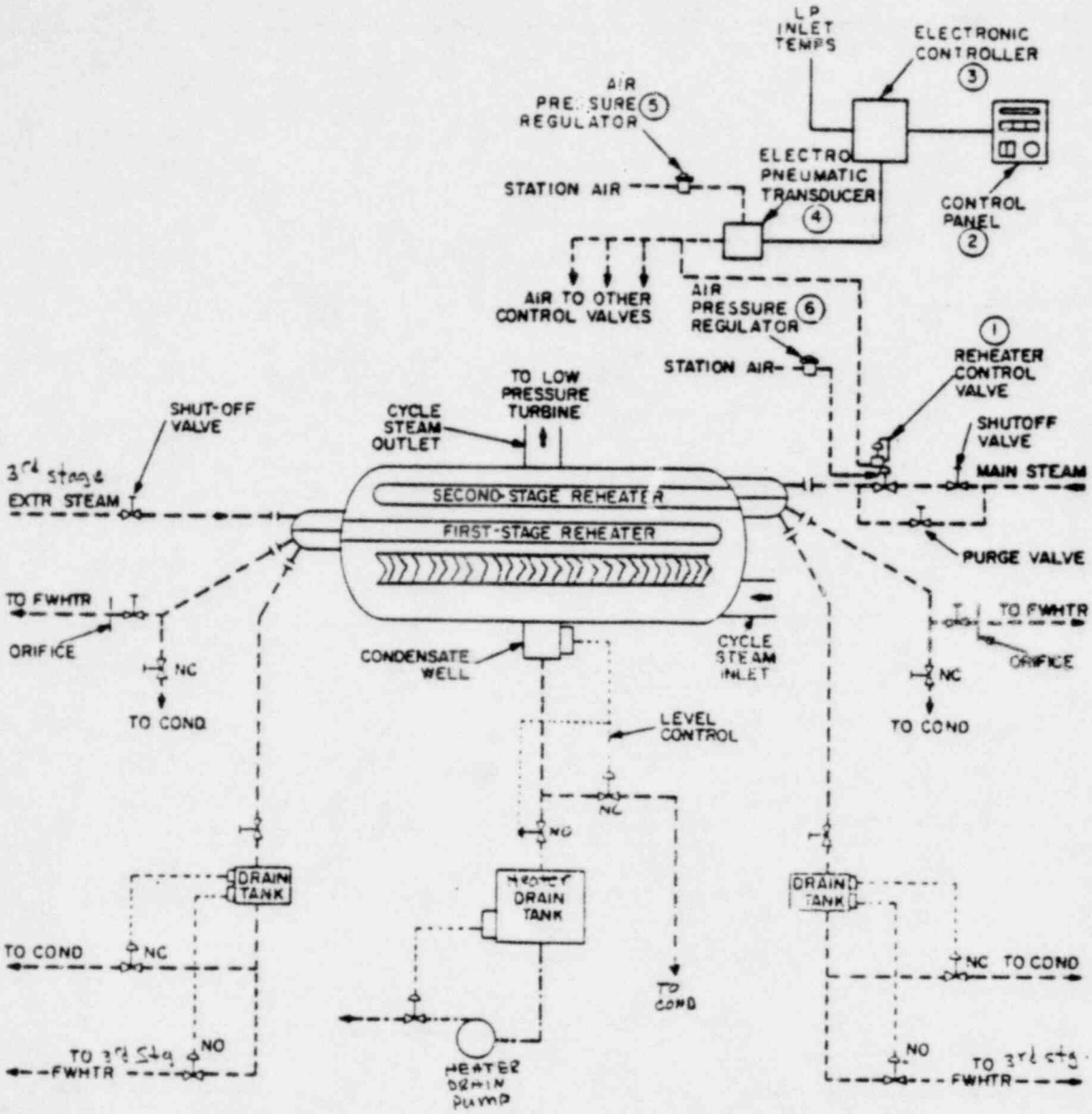
LP INLET TEMPS
ELECTRONIC CONTROLLER
3
AIR PRESSURE REGULATOR 5
STATION AIR
ELECTRO PNEUMATIC TRANSDUCER
4
CONTROL PANEL
2
AIR TO OTHER CONTROL VALVES
AIR PRESSURE REGULATOR 6
STATION AIR
1
REHEATER CONTROL VALVE
TO LOW PRESSURE TURBINE
SHUT-OFF VALVE
CYCLE STEAM OUTLET
SHUTOFF VALVE
3rd stage EXTR STEAM
MAIN STEAM
SECOND-STAGE REHEATER
FIRST-STAGE REHEATER
PURGE VALVE
TO FWHTR
TO FWHTR
ORIFICE
NC
TO COND
CONDENSATE WELL
CYCLE STEAM INLET
ORIFICE
NC
TO COND
LEVEL CONTROL
NC
NO
DRAIN TANK
HEATER DRAIN TANK
DRAIN TANK
TO COND
NC
NC TO COND
TO COND
TO 3rd Stg FWHTR
NO
HEATER DRAIN PUMP
NO
TO 3rd Stg FWHTR

Figure 1

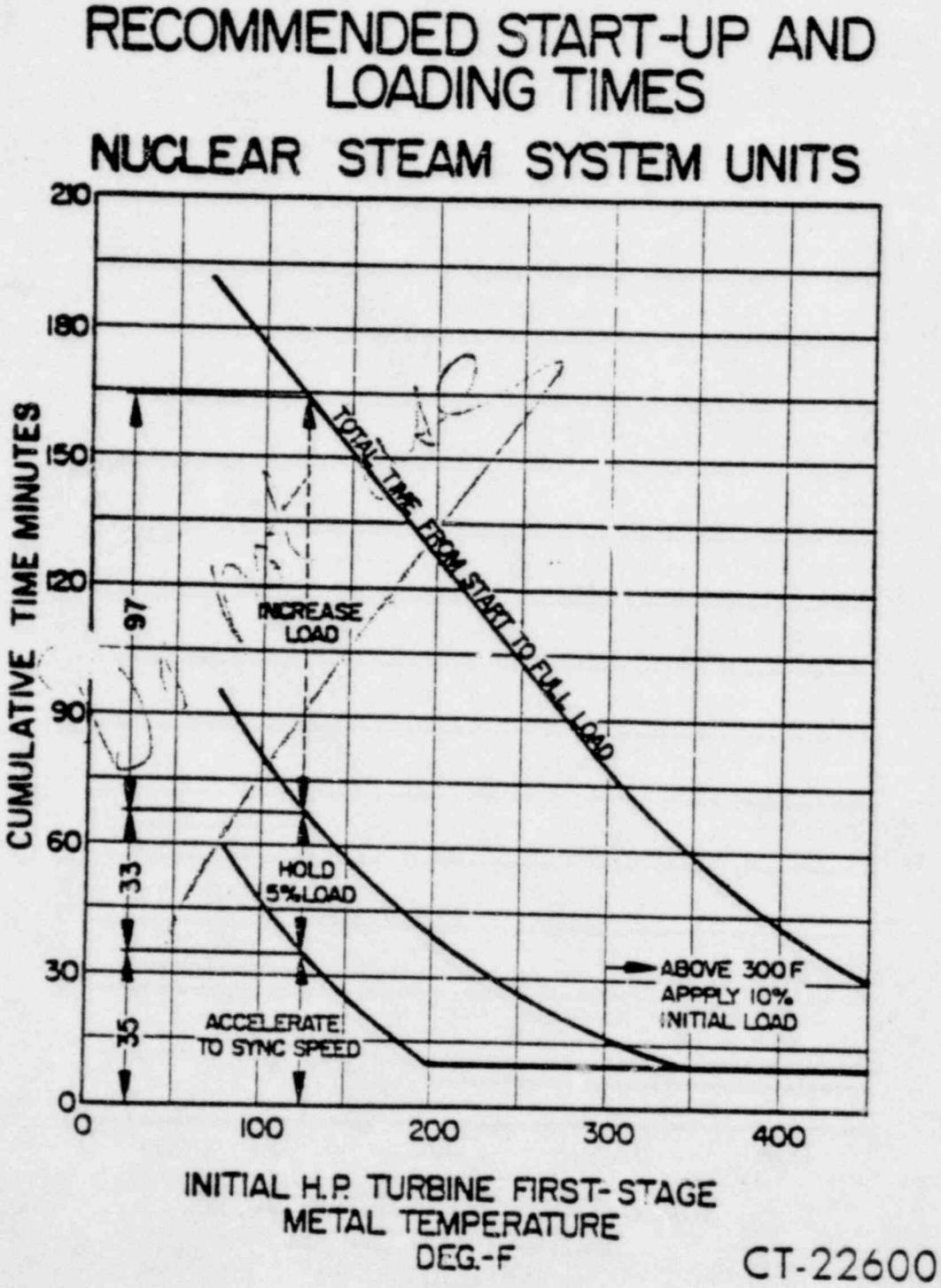
RECOMMENDED START-UP AND LOADING TIMES
NUCLEAR STEAM SYSTEM UNITS
CUMULATIVE TIME MINUTES
210
180
150
120
90
60
30
0
97
33
35
TOTAL TIME FROM START TO FULL LOAD
INCREASE LOAD
HOLD 5% LOAD
ACCELERATE TO SYNC SPEED
ABOVE 300 F APPPLY 10% INITIAL LOAD
0
100
200
300
400
INITIAL H.P. TURBINE FIRST-STAGE METAL TEMPERATURE DEG.-F
CT-22600

Figure 3

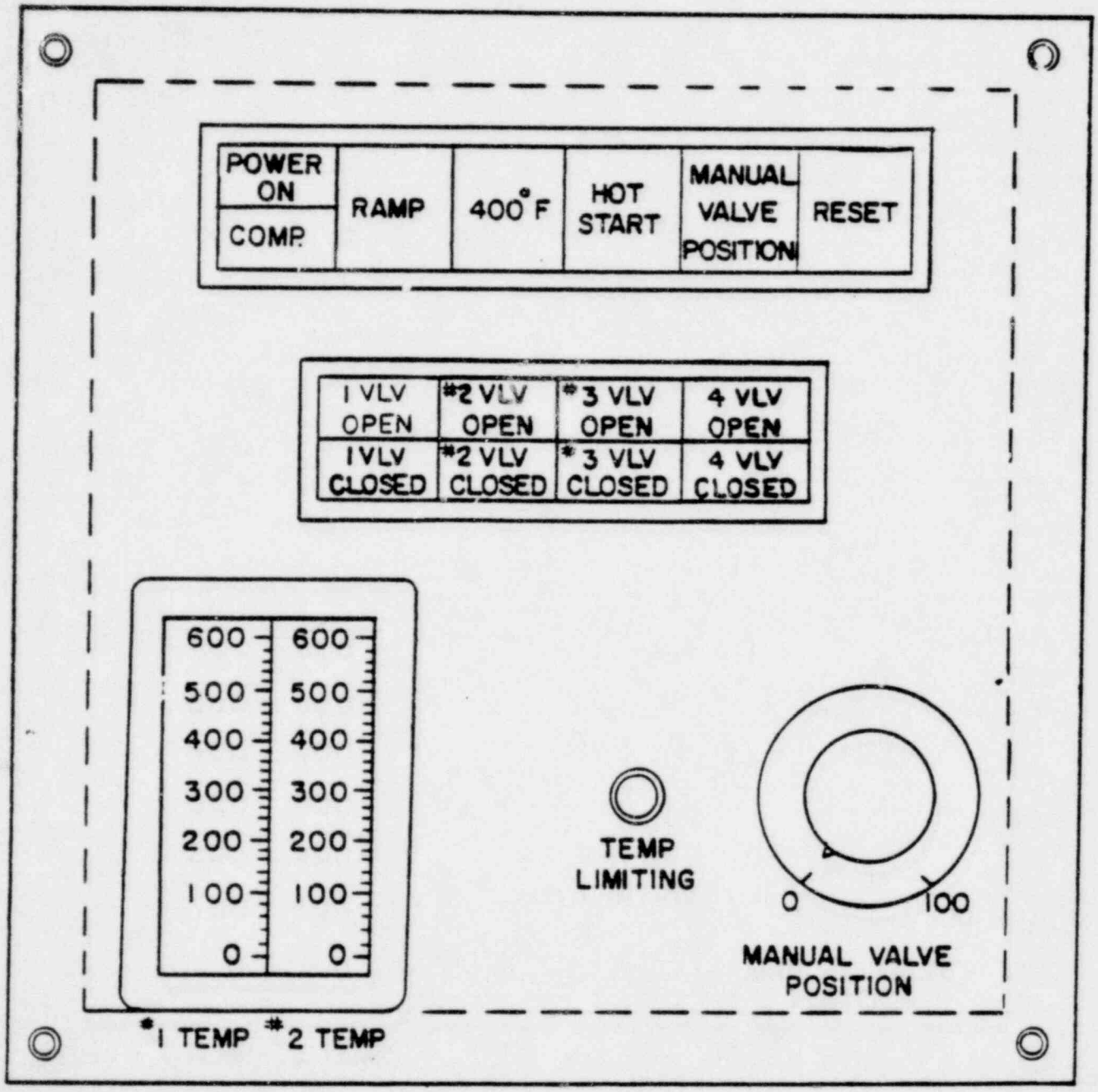
POWER ON
COMP.
RAMP
400°F
HOT START
MANUAL VALVE POSITION
RESET
1 VLV OPEN
#2 VLV OPEN
#3 VLV OPEN
4 VLV OPEN
1 VLV CLOSED
#2 VLV CLOSED
#3 VLV CLOSED
4 VLV CLOSED
600
500
400
300
200
100
0
TEMP LIMITING
0
100
MANUAL VALVE POSITION
#1 TEMP
#2 TEMP

Figure 2

This "Thermocouple List" is unavailable at present, but will be forwarded later.

Figure 5

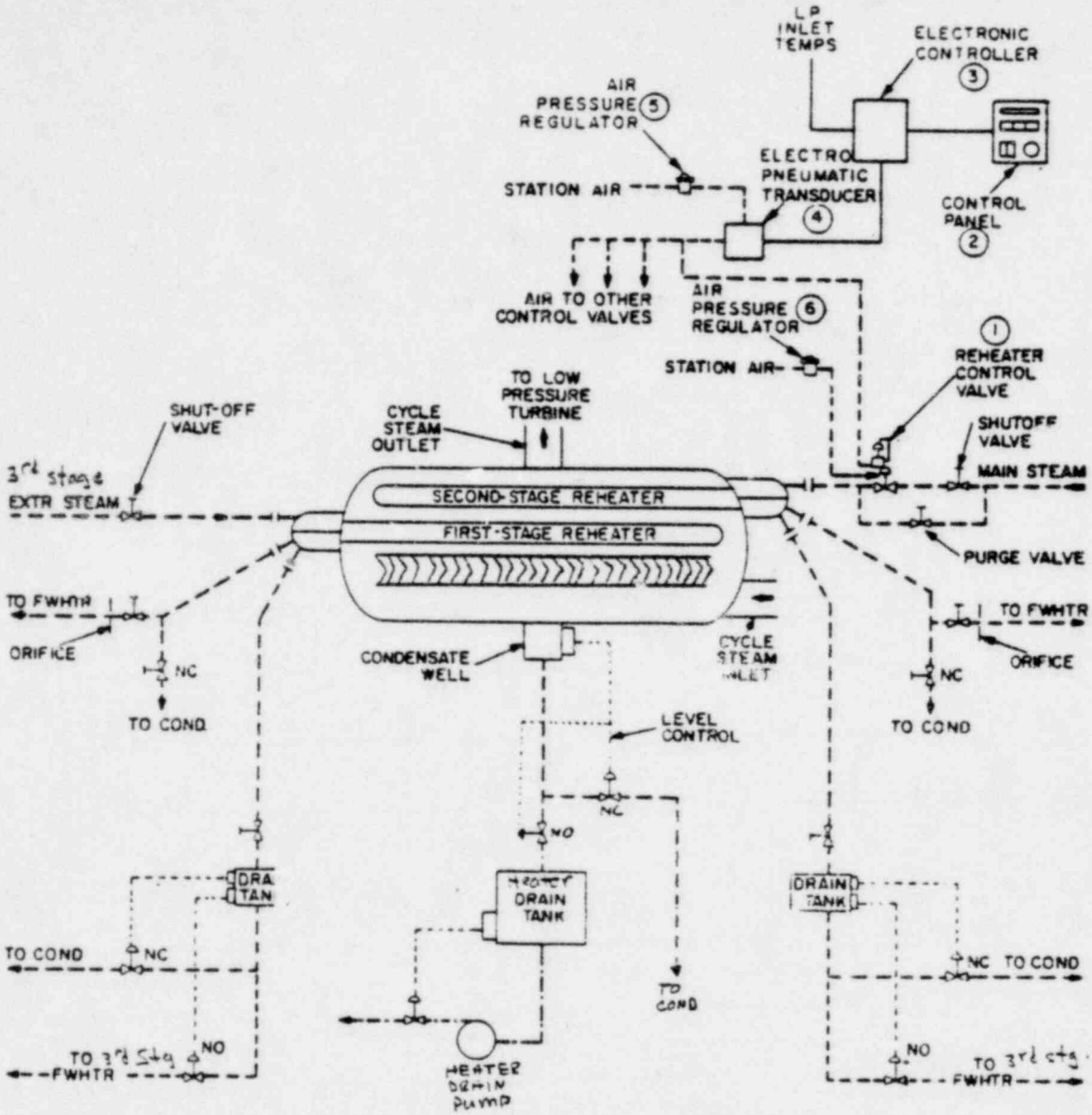
LP INLET TEMPS
ELECTRONIC CONTROLLER
3
AIR PRESSURE REGULATOR
5
STATION AIR
ELECTRO PNEUMATIC TRANSDUCER
4
CONTROL PANEL
2
AIR TO OTHER CONTROL VALVES
AIR PRESSURE REGULATOR
6
STATION AIR
1
REHEATER CONTROL VALVE
SHUTOFF VALVE
MAIN STEAM
TO LOW PRESSURE TURBINE
CYCLE STEAM OUTLET
SHUT-OFF VALVE
3rd stage EXTR STEAM
SECOND-STAGE REHEATER
FIRST-STAGE REHEATER
PURGE VALVE
TO FWHTR
ORIFICE
NC
TO COND
CONDENSATE WELL
CYCLE STEAM INLET
TO FWHTR
ORIFICE
NC
TO COND
LEVEL CONTROL
NC
NO
DRAIN TANK
HEATER DRAIN TANK
DRAIN TANK
TO COND
NC
NC TO COND
TO COND
TO 3rd Stg FWHTR
NO
HEATER DRAIN PUMP
NO
TO 3rd stg FWHTR

Figure 1

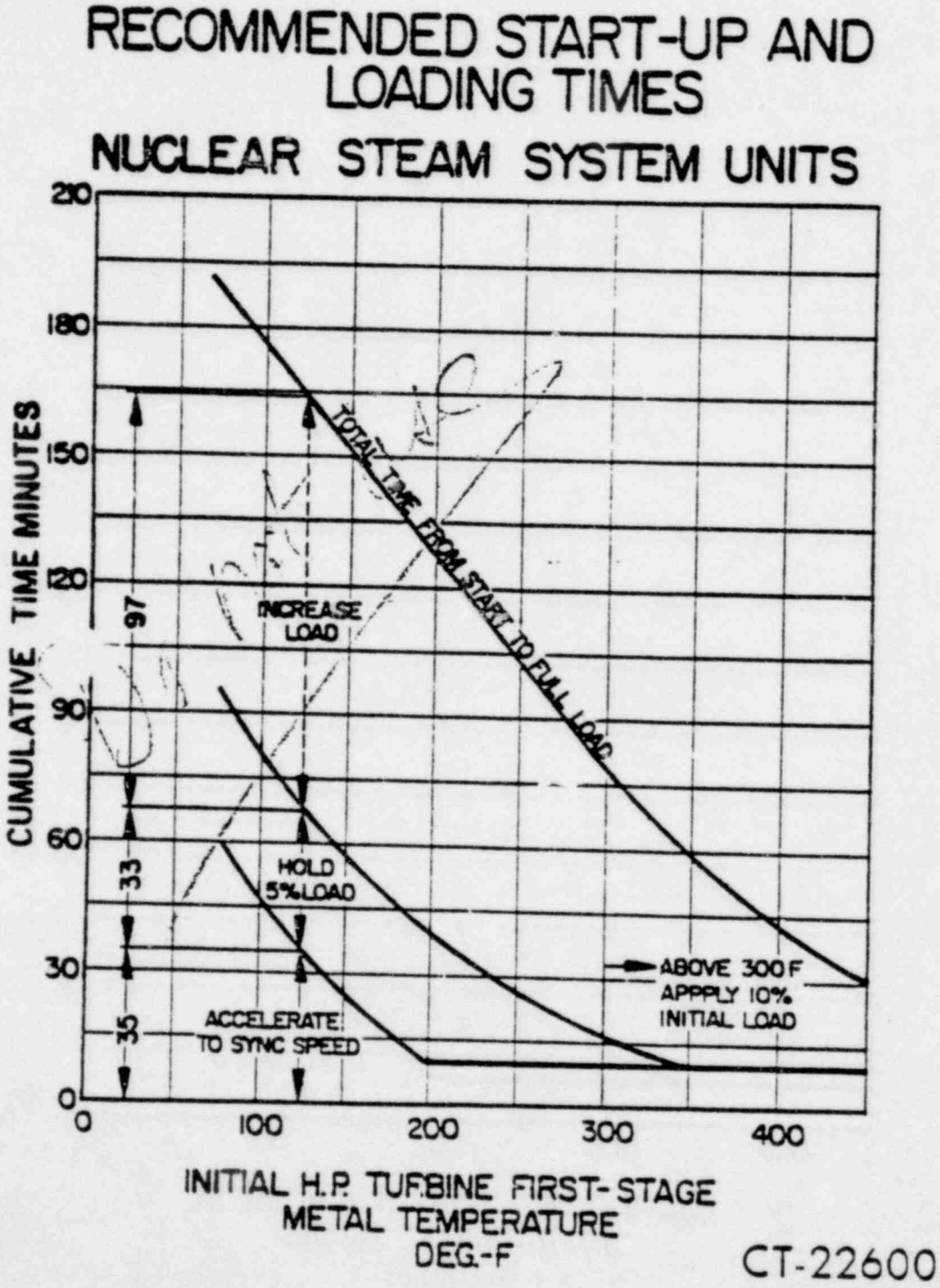
RECOMMENDED START-UP AND LOADING TIMES
NUCLEAR STEAM SYSTEM UNITS
CUMULATIVE TIME MINUTES
210
180
150
120
90
60
30
0
97
33
35
TOTAL TIME FROM START TO FULL LOAD
INCREASE LOAD
HOLD 5% LOAD
ACCELERATE TO SYNC SPEED
ABOVE 300 F APPPLY 10% INITIAL LOAD
0
100
200
300
400
INITIAL H.P. TURBINE FIRST-STAGE METAL TEMPERATURE DEG.-F
CT-22600

Figure 3

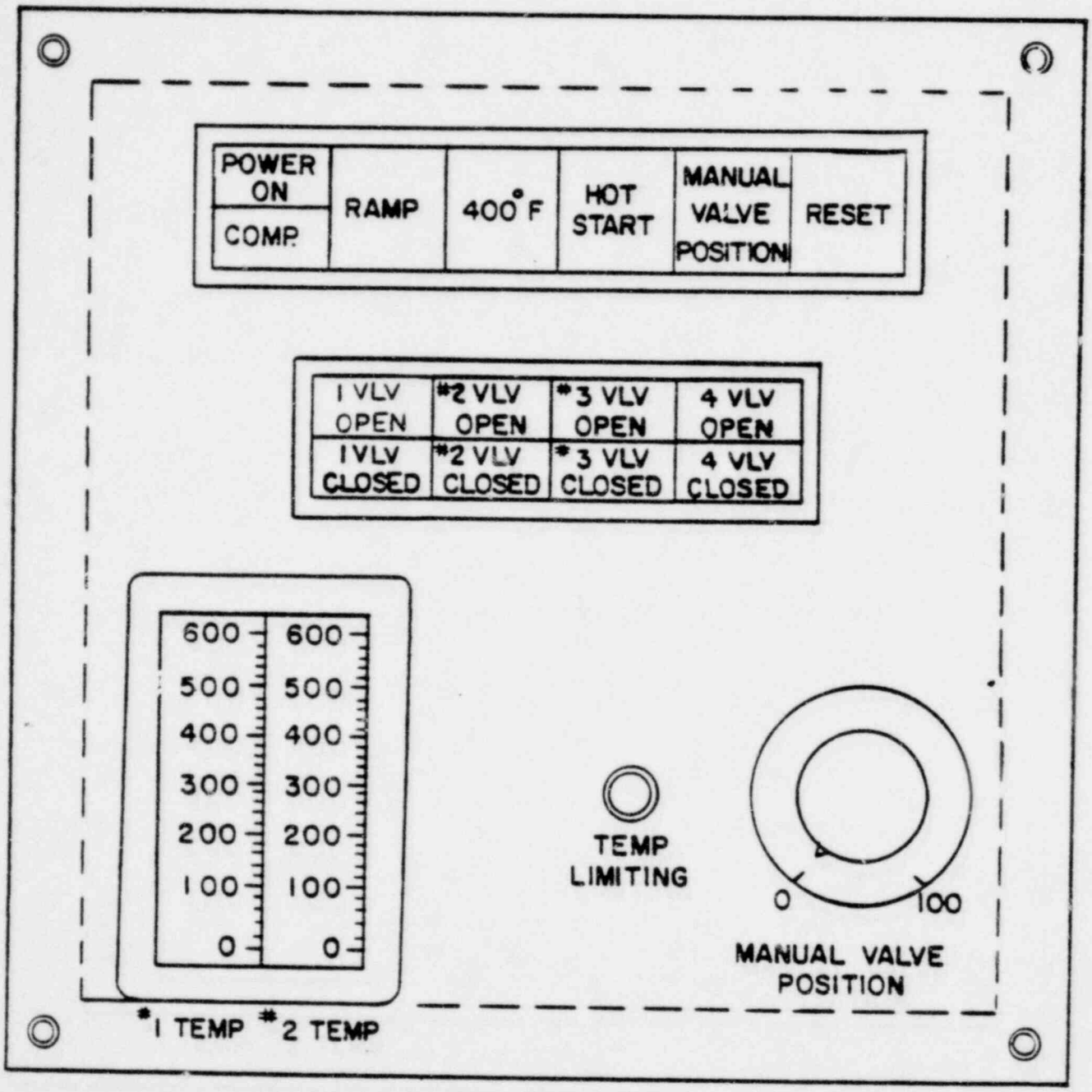
POWER ON
COMP.
RAMP
400°F
HOT START
MANUAL VALVE POSITION
RESET
1 VLV OPEN
#2 VLV OPEN
#3 VLV OPEN
4 VLV OPEN
1 VLV CLOSED
#2 VLV CLOSED
#3 VLV CLOSED
4 VLV CLOSED
600
500
400
300
200
100
0
TEMP LIMITING
0
100
MANUAL VALVE POSITION
#1 TEMP
#2 TEMP

Figure 2

This "Thermocouple List" is unavailable at present, but will be forwarded later.

Figure 5

ENCLOSURE 1

UNIT II CATEGORY IV STUDY ASSIGNMENT SHEET

CYCLE 3-2

NAME_____ START DATE_____

COMPLETION DATE_____

1. Read the RPS/NI Handout

2. Read the following procedures:

   a. 2105-1.1 - Nuclear Instrumentation
   b. 2105-1.2 - RPS
   c. 2105-1.5 - Incore Monitoring

3. Complete the RPS Questionnaire

4. Complete the NI Questionnaire

5. Read OP 2105-1.6 - NNI

6. Review the Unit II P&ID's and the NNI Tech. Manual

7. Complete the NNI Questionnaire

8. Read the following procedures:

   a. 2202-1.10 - Cooldown Outside the Control Room
   b. 2202-2.1/2.5 - Blackout
   c. 2203-1.11 - Hand Calculation for Tilt and Imbalance

9. Read section 5 of STS (Design)

TOTAL POINTS TO DATE FROM ENCLOSURE 2_____

WRITTEN TEST DATE_____ RESULTS_____

ORAL TEST DATE_____ RESULTS_____

ANSWERS MISSED, HANDED IN CORRECTED_____

_____ DATE_____
SIGNATURE OF LICENSED TRAINING COORD.

REFERENCES FOR QUESTIONNAIRES

3 2

REF. #	TITLE
1	RPS/NI Handout Provided
2	STS
3	Unit II P&ID's
4	NNI Tech Manual
5	2105-1.1 - NI
6	2105-1.2 - RPS
7	2105-1.6 - NNI

RPS QUESTIONNAIRE

3-2

1. List all automatic reactor trips and setpoints. What is each trip providing protection against? (Ref.#2)

2. What is the prupose of the "Shutdown Bypass" ? What limits apply to its use? (Ref.#2)

3. Is it possible to initiate "Shutdown Bypass" without tripping the reactor? Explain. (Ref.#2)

4. Define "degree of redundancy". (Ref.1)

5. What is the purpose of the "channel bypass"? How many channels can we bypass at one time? Explain. (Ref. #1)

6. List the observable parameters the operator uses to monitor DNBR. (Ref.#1)

7. Compute the variable low pressure trip setpoint for 100% power. (Ref.#1)

8. What is the purpose of the reactor protective subsystem toggle switches on the reactor trip module? (Ref. #1)

9. Draw the reactor trip logic down to the trip relay. Show shutdown bypass, channel bypass, and how a 2 out of 4 signal trips the reactor. (Ref. #1)

NON-NUCLEAR INSTRUMENTATION

3-2

RCS FLOW

1. Describe the type of detector used to measure RCS flow and its theory of operation. (Ref.#4)

2. Sketch the signal flow path form the detectors to the console indication for Loop A, Loop B, and Total flow. (Ref. #3,4)

3. Are the RCS flow indications temperature compensated? Expalin. (Ref. #4)

4. What must be done in order to switch the ICS Reactor Coolant System flow signal input? (Ref #7)

5. List the RCS flow instrument alarm and control functions. (Ref. #3,4)

6. What RCS Flwo indication goes to the computer? (Ref. #3,4)

RCS TEMPERATURE

1. List the power supplies for the NNI System. (Ref.#7)

2. List the uses of wide range Tc. Include applicable setpoints for interlocks. (ref. #3,4)

3. List the inputs to the Controlling Tave Selector Switch (RC12TAS). Describe the automatic interlock associated with RC12TAS. Include setpoint. (Ref.#3,4)

4. Sketch the RCS and all associated non-nuclear instrumentation. (Ref. #3,4)

5. Sketch the switch/signal development of the following ICS signal inputs. Also include computer input sources. Indicate normal signal selection and flowpath. (Ref. #3,4)

   a. Th
   b. ΔTc
   c. Tave

RCS PRESSURE

1. Describe the type and ranges of the detectors used to monitor RCS pressure. (Ref. #3,4)

2. Where are the detectors located? (Ref. #3,4)

3. Sketch the signal flowpath from the detector to the console recorder for wide range pressure and narrow range pressure. (Ref. #3,4)

4. List the required operator action to change ICS reactor coolant system pressure signals. (Ref#7)

5. List the alarms and control functions associated with the RCS pressure instrument. (Ref. #3,4)

PRESSURIZER LEVEL

1. What type of detectors are used? (Ref. #3,4)

2. What are the alarms and interlocks associated with pressuizer level? (Ref. #3,4)

3. Can we pull out the pressurizer level recorder while operating at power? Explain. (Ref.#7)

OTSG LEVEL INDICATION

1. What is the range of each OTSG Level channel? (Ref. #3,4)

2. Draw a simple sketch of an OTSG with its level and temperature detectors. Include penetration locations for each sensor. (Ref. #3,4)

3. Describe the operation of the OTSG level detectors. (Ref #3,4)

4. Which OTSG level indications are temperature compensated? Why? What is the signal source for the temperature? (Ref.#3,4)

5. Which OTSG level indications are used by the ICS? How and why are they used? (Ref.#3,4)

6. List the alarms associated with OTSG Level. Include setpoints. (Ref.#3,4)

FEED FLOW

1. Explain the theory of operation of the feed flow detectors. (Ref.#3,4)

2. Where are the detectors located? (Ref.#3,4)

3. Explain how and why feed flow is temperature compensated. (Ref.#3,4)

4. Explain the use of feed flow signals within the ICS. (Ref.#3,4)

5. Explain the operation of the FW Latching system.

6. Explain the operation the FW Rupture detection system.

NI QUESTIONNAIRE

3-2

1. Draw a block diagram of the power range channel showing all modules. List the setpoints where applicable and ranges of indication. (Ref. #1)

2. Draw an UCIC, as used in the power range, and explain its theory of operation. (Ref. #1)

3. Draw a block diagram of the intermediate reange channel showing all modules. List setpoints where applicable and ranges of indication. (Ref. #1)

4. When is the SUR inhibit bypassed? (Ref.#1)

5. Draw a CIC as used in the intermediate range and explain its theory of operation. (Ref. #1)

6. Graph an intermediate range response to a reactor trip from 100% power with correct compensating voltage. Superimpose a trace you would expect to see for a grossly under compensated and grossly over compensated detector. Breifly explain the reasons for the difference. (Ref #1)

   a. How would gross over compensation affect indication overlap between source and intermediate range channels?

   b. How would gross under compensation affect this overlap?

7. How much overlap are we required to have by Tech. Specs.? How much overlap do we normally have with proper compensation? (Ref. #1,2)

8. Sketch the ranges of source, intermediate, and power ranges showing overlap and units of measurement. (Ref. #1)

9. Draw a block diagram of the source range channel showing all modules. List setpoints where applicable and ranges of indication. (Ref.#1)

10. Draw a proportional counter as used in the source range and explain its theory of operation. (Ref. #1)

11. At what power level is source range high voltage de-energized? Draw the logic for this interlock. (Ref. #1)

12. Why is gamma compensation not reguired in the power range detectors? (Ref. #1)

13. Draw a top view of the core showing the out-of-core detector placement. (Ref. #1)

14. Give the signal sources for the out-of-core detector recorders on the main console. (Ref. #1)

22. REACTOR PROTECTION SYSTEM

REACTOR PROTECTION SYSTEM

1. Introduction

The purpose of the reactor protection system is to protect the reactor core from fuel cladding damage and to prevent overpressurization of the reactor coolant piping and the reactor building. This protection is required in order to ensure that the general public is protected against the potential radiation hazard of a gross fission product release from a damaged reactor core to the atmosphere.

Functionally, the system consists of four independent channels that monitor the reactor's power, flow, temperature and pressure along with the reactor building pressure. Each of the monitored parameters is utilized in a derived ratio combination, when two or more of the reactor protective system channels recognize that a hazardous condition exists, to trip the reactor.

2. Functional Description

The reactor protective system channels are identical to each other and whenever two of the four channels indicate any of the following conditions, the reactor will be automatically tripped:

1. When the reactor power, as measured by the neutron flux, exceeds a preset maximum limit.
2. When the reactor power, as measured by the neutron flux exceeds a variable maximum limit determined by a function of reactor coolant flow measurement and neutron flux imbalance.
3. When the reactor power, as measured by the neutron flux, exceeds a variable maximum limit determined by the number of reactor coolant pumps operating.
4. When the reactor coolant temperature exceeds a preset maximum limit.
5. When the reactor coolant pressure exceeds a preset maximum limit.

6. When the reactor coolant pressure falls below a preset minimum limit.

7. When the reactor coolant pressure falls below a variable minimum limit, determined by reactor coolant temperature.

8. When the reactor building pressure exceeds a preset maximum limit.

3. System Modules (See Figure RPS-1)

The basic reactor protection system is constructed from functional blocks. These blocks are then connected together to cause the whole chain to behave in the desired manner. Each significant block is explained below with a corresponding figure.

Sensors are used to obtain the physical measurements that are required by the system. These sensors make the measurement and provide an electrical signal proportional to the measured quantity.

Amplifiers are electrical devices that enlarge electrical signals and prevent them from going in the wrong direction. An amplifier that is used to prevent a signal from going in the wrong direction or effecting other circuits, is called a Buffer Amplifier. An amplifier that is used to add two or more signals to get the sum signal is called a summing amplifier.

Function Generators are devices that convert the form of an electrical signal. A typical function generator output might be the square root of the input signal, which would be needed to convert difference in pressure to a fluid flow signal. Other types of function generators are also possible.

Bistables are electrical devices that have two stable conditions, similar to the on and off modes of a light switch. Bistables are set to change from one condition to another when the input increases or decreases about a preset valve. Examples are: (1) the high pressure bistable trips when pressure exceeds the set point; (2) the low pressure bistable trips only when pressure drops below its set point. Bistables reset automatically when the signal returns to "normal."

4. System Operation

A simplified RPS channel is shown in Figure RPS-2. There are four identical channels, and we will consider a parameter only when it exceeds

its trip point. Then it causes a RPS channel trip condition that will cause all control rods to be inserted except for GR8 rods.

4.1. Overpower Trip

The nuclear instrumentation provides a linear neutron flux signal, in the power range, as an indication of reactor power. This signal is sent to a reactor protection system bistable module. When the neutron flux signal exceeds the trip point of the bistable, the bistable trips and de-energizes the associated reactor protection channel trip relay.

4.2. Reactor Outlet Temperature Trip (See Figure RPS-4)

The reactor outlet temperature is measured by resistance temperature detection (RTD) elements. The resultant reactor outlet temperature signal is monitored by a bistable which trips when the setpoint is exceeded, de-energizing the reactor protection channel trip relay.

4.3. Reactor Pressure Trip (See Figure RPS-4)

The reactor coolant pressure signal originating from the pressure transmitter is sent to a buffer module which acts as a signal conditioner and signal isolation unit. Pressure signals are then sent to high- and low-pressure bistable modules. When the pressure exceeds the trip point, of the high-pressure bistable, the bistable trips and de-energizes the channel trip relay. The low-pressure bistable trips, when the pressure falls below the trip point, de-energizing the channel trip relay.

4.4. Reactor Building Pressure Trip

The reactor building pressure is also monitored by the reactor protection system. When the reactor building pressure exceeds the set point, the bistable trips and de-energizes the protection channel's trip relay.

4.5. Pressure — Temperature Trip

Figure RPS-3 shows the Normal Operating Envelope in relation to the allowable maximum pressure line A-B, maximum temperature line

B-C, variable temperature pressure line C-D, and minimum pressure D-E. When the reactor temperature and pressure goes outside of the ABCDE curve, the system will trip. The circuits which do this are shown in Figure RPS-4.

The high pressure trip keeps the system below the maximum pressure line, A-B, and the low pressure trip prevents the system from operating below the minimum pressure line, D-E, with the high temperature trip ensuring that the temperature remains less than B-C. To stay to the left of line C-D requires a combination of pressure and temperature. This is solved by the circuit which ends with the press-temp trip. The signal converter converts the temperature signal to the form (aT-b), where a and b are preset constants already set into the equipment. The value (aT-b) is then compared signal, as a variable set point within the bistable. When the variable set point value is greater than the pressure signal, a trip occurs.

4.6. Power/Imbalance/Flow-Trip

To ensure the safety of the reactor core, the minimum power imbalance between the top and bottom of the core is required in order to operate. Also, it is necessary to restrict the maximum power based upon the total coolant flow in the loops. Referring to Figure RPS-3, it is required that operating be in the middle about the 0 line. The protection channel (Figure RPS-4) computes the envelope requirement and causes a trip when the envelope boundaries are violated. The electronic circuitry measures the flow in each loop and sums them to obtain the total flow. This signal is then modified by the power imbalance (i.e., moves it away from the 0 line). The resultant modified signal is then compared with the power signal in order to determine if a trip is to occur.

4.7. Power-Pumps Trip (See Figures RPS-5A and 5B)

The reactor coolant pump motors are monitored by the pump monitor logic which counts the number of operating reactor coolant pumps and identifies the coolant loop in which the pumps are operating. The pump monitor logic output controls the trip point of a power-pumps

comparator and initiates a channel trip when the number of operating pumps, in each loop, correct for the appropriate reactor power level.

5. Reactor Trip Circuit

The reactor is tripped by the removal of electrical power to the control rod drives mechanisms. When electrical power is removed from a control rod drive mechanism, its control rod is released, and it falls to the fully inserted position with the exception of group 8, which comprises the axial power shaping group (this group does not trip on power removal). The removal of electrical power from the control rod drives is accomplished by opening the circuit breakers that supply power to the controd rod drive system (CRDS). Each of these breakers have an undervoltage coil which, when the input voltage is above a minimum value, allows the breaker to be closed thereby completing the circuit. If the voltage is removed from the undervoltage coil, the undervoltage mechanism trips the breaker thereby opening the circuit.

Each of the four reactor protection system channels has an output relay connected in series with the undervoltage coil of the circuit breaker as shown in Figure RPS-6. When a channel trips, the output relay opens one of the four circuit breakers and, if one other channel trips, all power will be removed from the CRDS.

Each channel of the protection system functions to de-energize its breaker when two out of four channels are tripped. Figure RPS-7 shows a simplified electrical diagram of the electrical circuit to the undervoltage (UV) coil of a breaker. If either end of the circuit is broken, the UV coil will be de-energized. The protective system channels are labeled A, B, C, and D and the contacts KA, KB, KC, and KD are the K relay contacts, in each channel previously described, and open when the K relay de-energizes. For example, when A and B channel trip, the KA and KB relays in the upper set open circuit the system. Likewise when the A and C channels trip, the lower circuit is opened.

6. Reactor Protection Channel

A complete simplified channel is shown in Figure RPS-8. Each individual channel has a bypass circuit that can be energized. This bypass circuit would be used if there was a circuit failure in the channel and

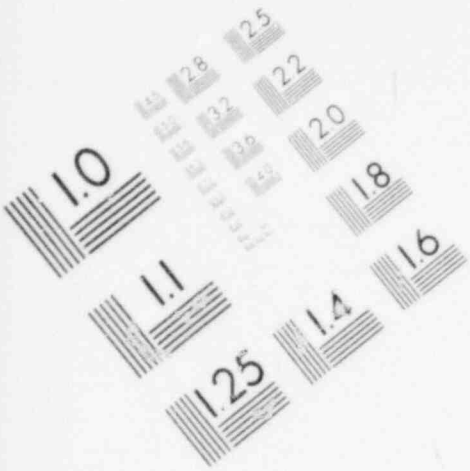

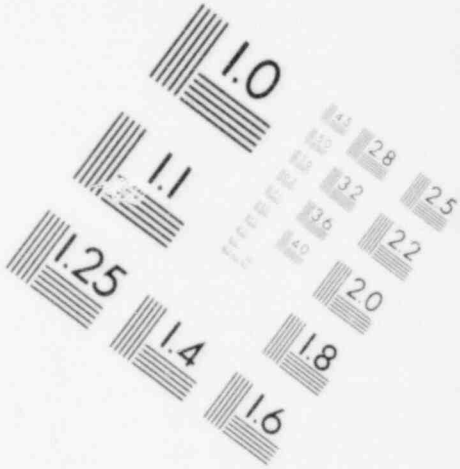

IMAGE EVALUATION
TEST TARGET (MT-3)

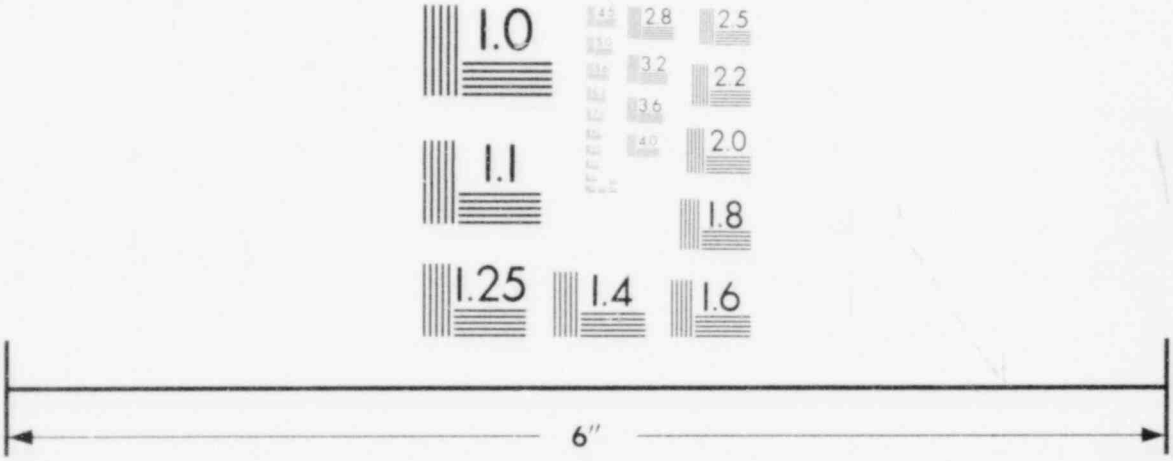

MICROCOPY RESOLUTION TEST CHART

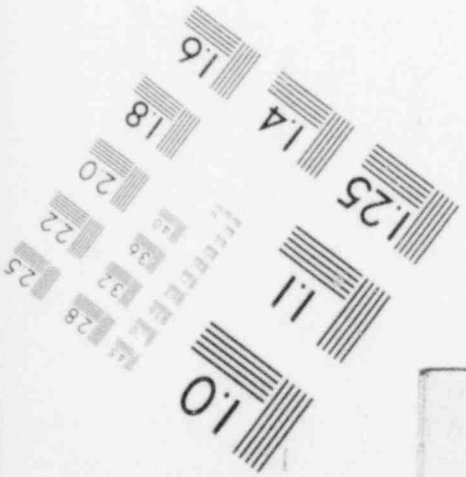

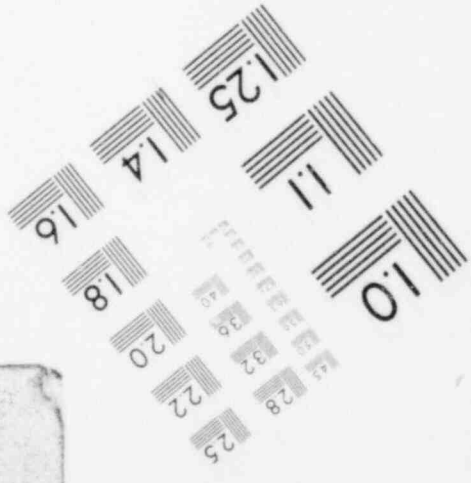

it was not working properly or periodic maintenance was being performed on it. The bypass switch, when shut, energizes the B/P relay and this supplies current to the KA relay through contacts B/P, thereby allowing relay "KA" to remain energized independent of its associated series channel trip contacts. In the B/P relay circuit there are contacts from the other three reactor protection system channels. These other B/P relays must be de-energized (the respective channel not in bypass) in order to put the desired reactor protection system channel into bypass. When a reactor protection system channel is in bypass, it takes two of the remaining three reactor protection system channels to cause a reactor trip.

The channel trip relay performs its function by supplying power through contacts in the KA1, KA2, KA3 and KA4 relays which are located in channel A, B, C, and D respectfully. The de-energizing of relays KA1, KA2, KA3, and KA4, when combined with another channel trip relay, function to trip the power supply breakers.

In order to get a trip on channel A, two of the four relays KA1, KB1, KC1 or KD1 must be de-energized at the same time.

7. Reactor Protection System

The entire reactor protection system, in simplified form, is shown in Figure RPS-9. In the preceding sections, each component element of the reactor protection system has been discussed. The last remaining objective is to acquire an understanding of the Module Interlocks and Test Trip Relay, identified on the far right channel. Each channel and each trip module are capable of being individually tested. When a module is placed into the test mode it causes the Test Trip Relay to open the "TT" contact and thereby indicate a reactor protection system channel trip. Under normal conditions the channel to be tested is placed in bypass prior to testing a module.

7.1. System Design Features

The reactor protection system performs the most important of all protective functions in the plant; that of protecting the nuclear reactor from damage. Therefore, the design criteria applied are the most extensive and restrictive of any that are applied to a plant system

designed to guarantee reliable operation. The entire system is designed to meet, or exceed, the requirements of the IEEE Criteria for Nuclear Power Plant Protection Systems dated August, 1968, more commonly known as IEEE 279.

Single Failure — No single failure will prevent a protective system from fulfilling its protective functions, when action is required. In addition, although not required by IEEE 279, the system must meet the plant reliability criteria that no single failure will initiate unnecessary protective system action wherever implementation does not conflict with the single-failure criteria of IEEE 279.

Redundancy — The reactor protective system functions are implemented with redundant sensors, instrument strings, logic and action devices.

Independence — Redundant reactor protective system channels and their associated inputs and outputs are both electrically and physically independent so that electrical or mechanical faults in one channel will not affect the redundant channels in any way.

Separation — Separation of protection and control is provided for by having only one string of redundant instrumentation connected at any one time to the control system. Electrical independence is ensured by using isolation amplifiers.

Manual Trip — Manual trip switches, independent of the automatic trip instrumentation, are provided.

Testability — Manual test facilities are built into the reactor protective system in order to allow for operational testing necessary to assure that the system will fulfill its protective functions as designed. Also, it allows on-line testing, for proof of operability and reliability, without interfering with normal reactor or plant operation or trip functions.

Loss of Power — Loss of power to any part of the reactor protection system will cause the affected reactor protection system channel to trip.

Equipment Removal — The removal of a reactor protection system module from its system cabinet will initiate a trip in the affected channel.

Seismic Requirements — The reactor protection system is designed to fulfill its required protective functions during and after a maximum hypothetical earthquake.

7.2. System Monitoring

The modules, logic and analog equipment, associated with a single reactor protection system channel are contained wholly within two reactor protection system cabinets. These cabinets contain a meter for every analog signal used by the protection channel and visual indication of the state of every logic element. At the top of one cabinet, easily visible at all times, is a channel status panel. Lamps on this panel provide a quick visual indication of the trip status of the particular channel and of the reactor trip module associated with it. In addition, lamps are provided to indicate the following: (1) channel is in test; (2) fan failure has occurred; (3) channel bypass has been initiated; (4) shutdown bypass has been initiated; (5) CRD breaker has tripped.

Also, each visual indication, readouts within the individual channel cabinets, each trip function, power supply, analog signal, and interlock is monitored by the plant computer. Trip actions are sequence-monitored in the plant computer, permitting the operator to readily identify the channel trip actions.

Figure RPS-2. Reactor Protection Trip

RC PRESSURE LOW
FLUX/DELTA FLUX/FLOW
POWER/PUMPS
PRESSURE/TEMPERATURE
SHUTDOWN

HIGH POWER
RC PRESSURE HIGH
RC TEMPERATURE HIGH
REACTOR BUILDING HIGH

TRIP TEST

TRIP RESET

TRIP RELAY

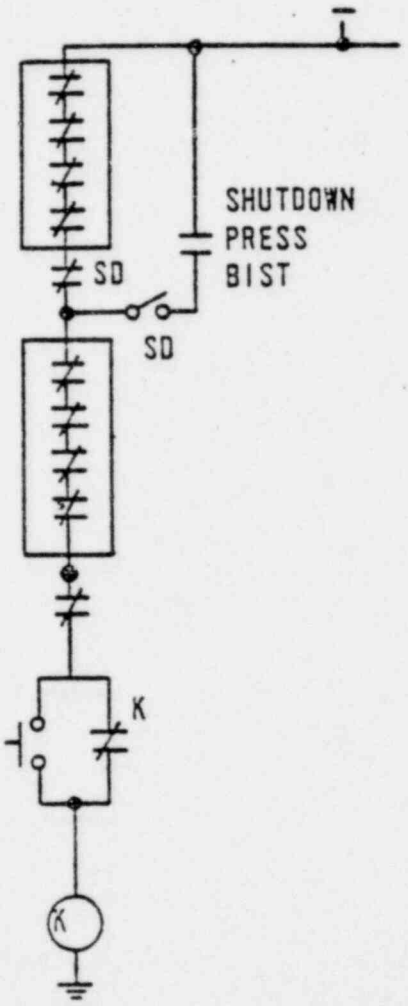

Figures RPS-6 and RPS-7

Figure RPS-8. Reactor Protection Channel

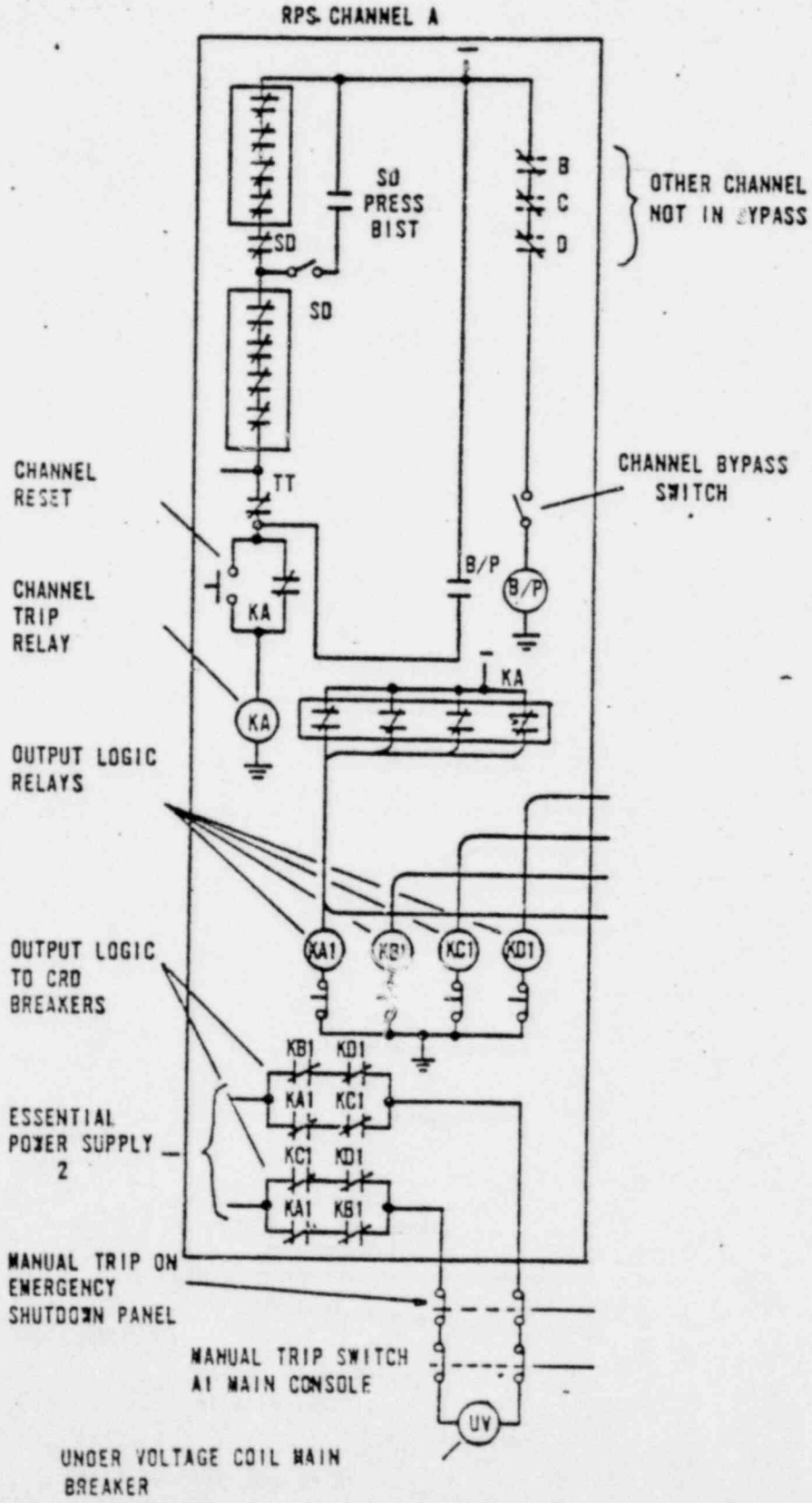

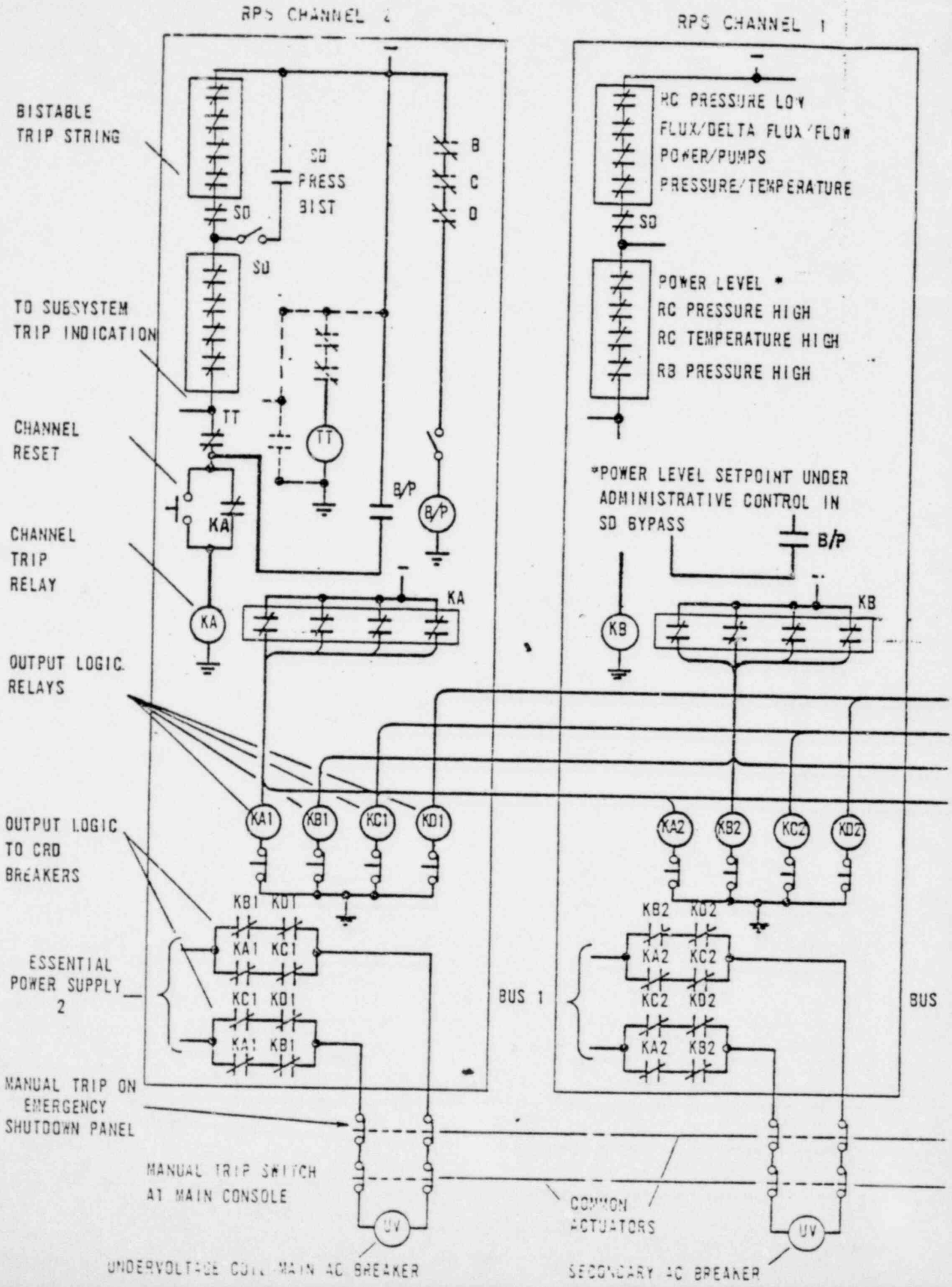
RPS CHANNEL 2
RPS CHANNEL 1
BISTABLE TRIP STRING
SD PRESS BIST
B
C
D
SD
SD
TO SUBSYSTEM TRIP INDICATION
TT
TT
CHANNEL RESET
KA
B/P
B/P
CHANNEL TRIP RELAY
KA
KA
HC PRESSURE LOW
FLUX/DELTA FLUX/FLOW
POWER/PUMPS
PRESSURE/TEMPERATURE
SD
POWER LEVEL *
RC PRESSURE HIGH
RC TEMPERATURE HIGH
RB PRESSURE HIGH
*POWER LEVEL SETPOINT UNDER ADMINISTRATIVE CONTROL IN SD BYPASS
B/P
KB
KB
OUTPUT LOGIC RELAYS
KA1
KB1
KC1
KD1
KA2
KB2
KC2
KD2
OUTPUT LOGIC TO CRD BREAKERS
KB1 KD1
KA1 KC1
KC1 KD1
KA1 KB1
KB2 KD2
KA2 KC2
KC2 KD2
KA2 KB2
ESSENTIAL POWER SUPPLY 2
BUS 1
BUS
MANUAL TRIP ON EMERGENCY SHUTDOWN PANEL
MANUAL TRIP SWITCH AT MAIN CONSOLE
COMMON ACTUATORS
UV
UV
UNDERVOLTAGE COIL MAIN AC BREAKER
SECONDARY AC BREAKER

Figure RPS-9. Reactor Protection System

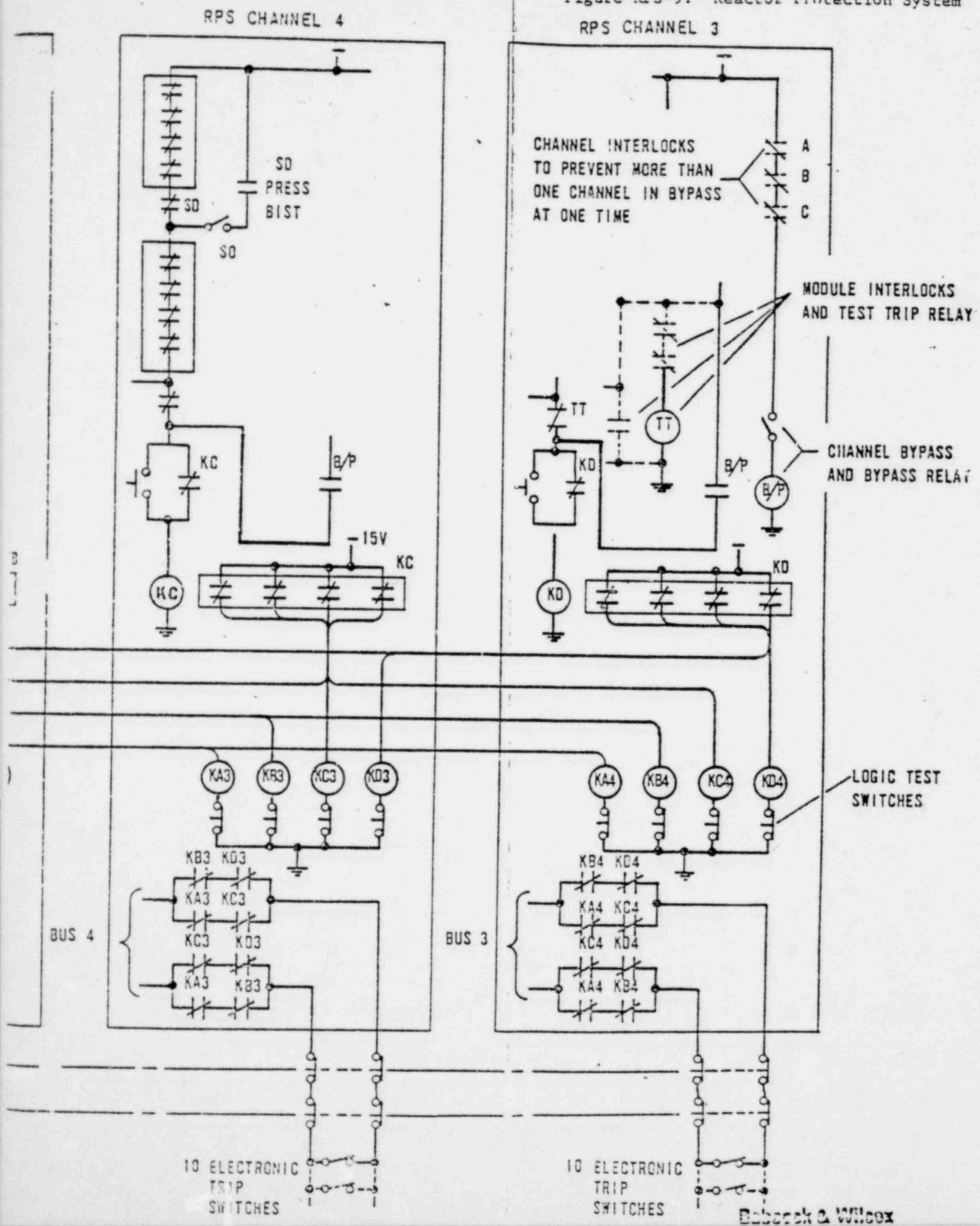

Babcock & Wilcox

1. INTRODUCTION

The subject of this description is the Bailey Meter Company 880 Nuclear Instrumentation and Protection System. It is a part of the plant Reactor Protective System.

Figure 1 is a basic block diagram of the Reactor Protection System. The 880 Nuclear Instrumentation and Protection System monitors selected variable associated with the nuclear reactor plant and automatically initiates corrective action should any of the monitored variables approach unsafe pre-established values. It is used to provide protection for and to prevent accidents to the reactor core and the reactor coolant systems.

The protection function performed by the Reactor Protection System is a reactor trip function. A rod withdrawal inhibit function is also generated.

The instrumentation used to implement the reactor protective functions is divided into two types: non nuclear and nuclear instrumentation.

The nuclear instrumentation is used to monitor the following reactor parameters:

1. Reactor out of core leakage flux, which is a measure of reactor power.

2. Reactor startup rate, derived from the above measurement.

The non nuclear sensors are used to monitor the following reactor parameters:

1. Reactor outlet temperature.

2. Reactor coolant pressure.

3. Reactor coolant flow.

4. Reactor Building Pressure.

The following description of the Bailey 880 System will begin with an overall look at the system organization, its major interrelated parts and their functions. Followed by this description of the whole system will be a more detailed discussion of each major part.

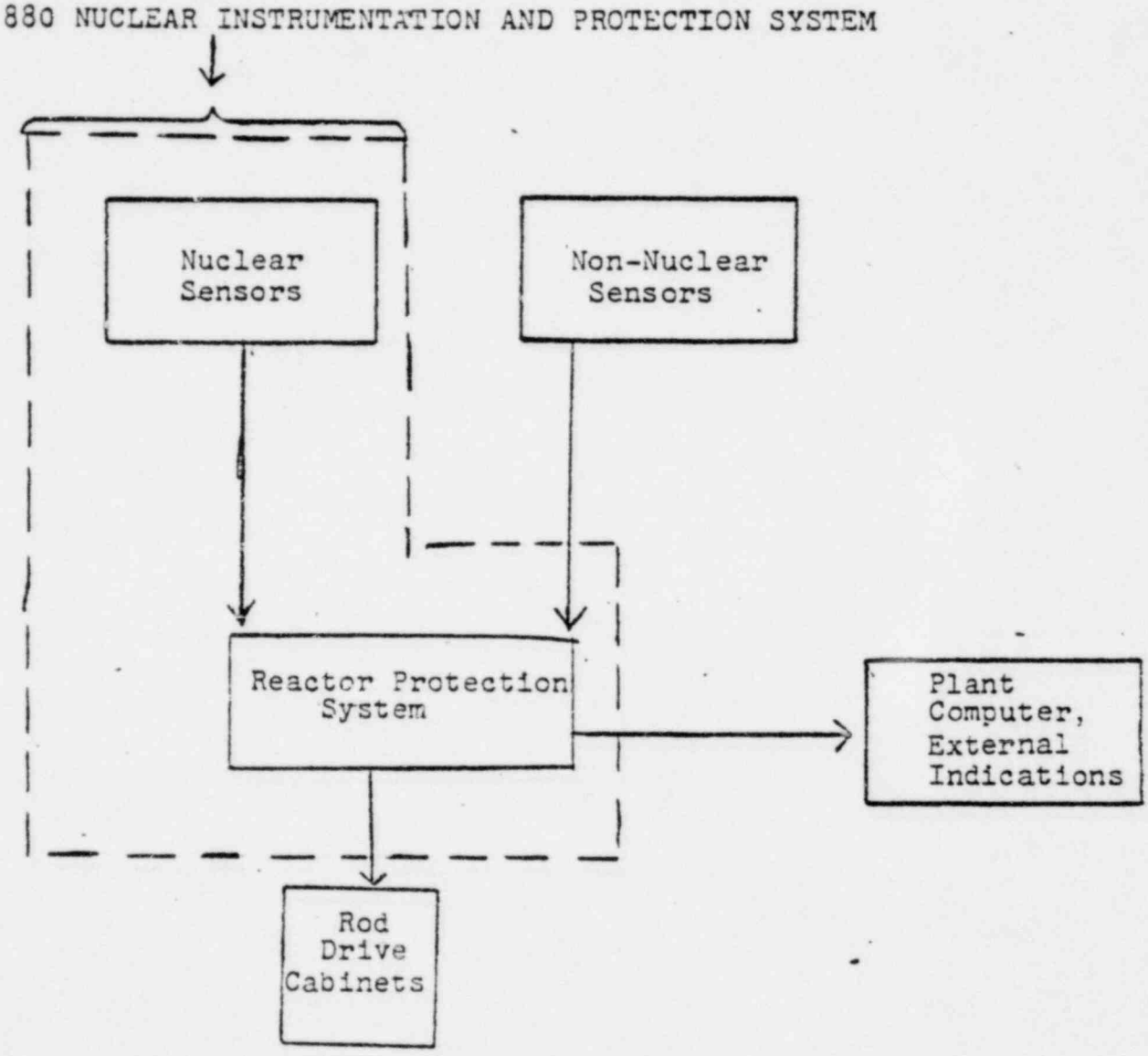

REACTOR PROTECTION SYSTEM

FIGURE I

2. SYSTEM ORGANIZATION AND FUNCTION

(Reference Drawings: D8047801, D8047802 and Figure 2.1)

The Bailey Meter Company 880 system is divided into four major redundant parts or subassemblies which are shown on drawings D8047801 and D8047802. The nuclear and non-nuclear instrumentation which monitors the reactor flux is shown on Drawing D8047801.

The two functions performed by the 880 system are: Rod Withdrawal Inhibit functions and Reactor Trip functions. Drawing D8047801 shows the Rod Withdrawal Inhibit function. Drawing D8047802 shows the circuitry for the Reactor Trip functions.

2.1 Nuclear Instrumentation

The nuclear instrumentation includes all instruments associated with the measurement of the reactor's out of core leakage flux, and the processing and display of leakage flux measurements as a measure of reactor power.

The neutron flux level of a power reactor must be monitored at all times and at all power levels. This requirement calls for approximately 12 decades of instrumentation for complete monitoring of the entire operating range from source strength to full power output.

To cover the above requirement, overall coverage is obtained by using multiple detectors with overlapping ranges. Figure 2.1 is a diagram showing typical measuring ranges of the detectors in terms of reactor power output.

There are three types of detectors and three measuring ranges used:

1. Source Range Instrumentation.
2. Intermediate Range Instrumentation.
3. Power Range Instrumentation.

As shown in Drawing D8047801, there are two (2) Source Range Channels, two (2) Intermediate Range Channels, and four (4) Power Range Channels.

The primary purposes of the Source and Intermediate Range Channels are to provide neutron flux level information to the operator and to monitor the relative rate of change of neutron flux for reactor startup control.

The reactor startup control is generated by the Rod Withdrawal Inhibit logic explained below.

The primary purpose of the Power Range Channels is monitor the flux level while operating in the power range and to generate a Reactor Trip if predetermined safe operating limits are exceeded. See a description of the Reactor Trip function below.

2.2 Non Nuclear Sensors

The non-nuclear sensors are required to protect the plant against various excursions detectable from non nuclear parameters. The essential parameters monitored are:

(1) Reactor Coolant System Pressure

(2) Reactor Coolant System Temperature

(3) Reactor Coolant System Flow

(4) Reactor Building Pressure

(5) Reactor Coolant Pump Power Monitors

As shown in drawing D8047801, there are a total of 20 non-nuclear instrumentation channels. Each subassembly contains 5 non-nuclear instrumentation channels and are redundant in each of the four subassemblies. See the Reactor Trip function discussion below for a description of the logic associated with these channels.

2.3 Rod Withdrawal Inhibit Logic

Dwg. D8047801 shows the relay logic used in the Rod Withdrawal Inhibit Function. The two Source Range Channels (NI-1 and NI-2) and the two Intermediate Range Channels (NI-3 and NI-4) monitor the startup rate of the reactor. If anyone of the above four channels exceeds a predetermined Startup Rate a Rod Withdrawal Inhibit (Rod Hold) Signal is sent to the Control Rod Drive system. This signal prevents the operator from removing the control rods any further.

The Startup Rate Rod Withdrawal Inhibit function of the two Source Range Channels NI-1 and NI-2 is inhibited by the Source Range High Voltage Cutoff and Startup Rate Inhibit logic described below. This is accomplished when the Source Range Detector Power Supply is cutoff. Shutting off the power supply inhibits the normal operating of the Source Range Startup Rate bistable and places it in an untripped state regardless of the input condition.

The complete Rod Withdrawal Inhibit logic (Rod Hold) is bypassed by the Power Range channels. Once the reactor power safely reaches the sensitivity level of the Power Range channels (NI-5, NI-6, NI-7 & NI-8), relay logic is provided to bypass this Rod Inhibit function. From Dwg. D8047801, the following circuit can be obtained. The "Rod Hold" signal is an open Contact state.

Rod Withdrawal Inhibit **(Inhibited by Source Range High Voltage Cutoff & Startup Rate Inhibit Logic)**

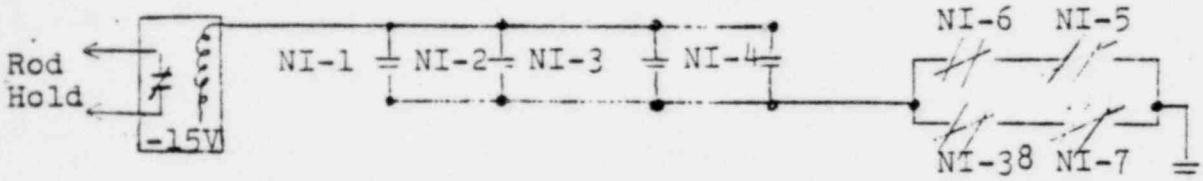

Aux. Relay

As long as the startup rate in the source and intermediate ranges remains within specified limits, the four n.o. contacts shown above remain open. Once the power range is active, the n.c. contacts of the four power range channels will open. Note that it takes at least two contacts (either NI-5 or NI-6 and NI-7 or NI-8) to keep the circuit open in order to successfully bypass the Rod Hold Inhibit Function. This two-out-of-four logic provides a safety factor to insure that the power range level has been safely reached and that the instrumentation is functioning in that range.

2.4 Source Range High Voltage Cutoff & Start Up Rate Inhibit Logic

Another feature of the Nuclear Instrumentation, which Dwg. D8047801 points out is the Source Range High Voltage Cutoff function. Since the Source Range Channel only monitors the lower portion of the total flux spectrum, it must be protected when the reactor power exceeds the Source Range's monitoring capability. Operation of the Proportional Counter Assembly in a high gamma flux shortens the life of the detector and for that reason the high voltage must be shutoff. To provide this protection, the high voltage from the Detector Power Supply to the preamp is cut off. The Detector Power Supply also sends an inhibit signal to the Start Up Rate bistable circuit to prevent a false contact closure or Rod Hold signal as the transition is made from the Source Range to the Intermediate Range monitoring activity.

Since there are two independent source range channels, each is independently provided with its own high voltage cutoff circuit. The relay logic for this function is shown

on Dwg. D8047801 and is redrawn for clarity below. The circuit is identical for each of the Source Range channels.

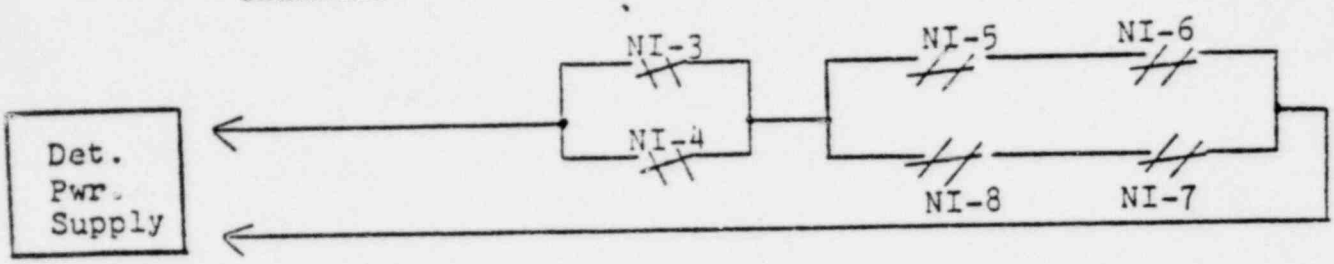

Note that both Intermediate Range Channels (NI-3 and NI-4) must be active before the N.C. Contacts can open to shut off the high voltage. The power range channels (NI-5, NI-6, NI-7 and NI-8) are also included in the high voltage cutoff function. In the power range, it takes a specific set of two power range channels to provide the cut-off capability. From the circuit above, it would require that NI-5 or NI-6 and NI-7 or NI-8 be active in order to shut off the high voltage. With the conditions just described, the Source Range Channel is protected from damage when its input exceeds the monitoring range of the channel. Thus, the criteria of overrange protection or "foldover" is clearly represented in terms of the source range high voltage cutoff circuits.

2.5 Reactor Trip Function

Dwg. D8047802 shows the instrumentation required to control the reactor activity. The power to the control rod drive systems is controlled by the reactor trip modules shown on this drawing. The contact logic shown at the bottom of the drawing is used to control the circuit breakers in the power circuits of the rod drive systems. Note that the contact arrangement requires that at least two of the four independent reactor trip modules be in their "trip" condition before the circuit breakers for the rod control drive are disabled. Thus, a single channel failure cannot cause an interruption in the power circuit of the control rod drive system. This single failure criteria is important in the performance of the reactor protection system.

From Dwg. D8047802 which shows the vital parts of the reactor trip module, it can be seen that a power failure in one of the four trip modules will drop out the main trip relay. Upon restoration of the power, this trip relay

cannot be reenergized unless the reset switch is depressed. The relay is in its "trip" condition until the reset action is taken by the operator. Thus, a power failure will indicate a "trip" condition and requires operator attention to respond and restore the system to normal operation. This criteria of "trip" indication upon power failure, can be clearly seen on Dwg. D8047802.

The reactor trip module is designed to respond to several conditions aside from power failure which warrants a "tripped" state. The circuitry within the trip module is triggered by the following conditions in the instrumentation:

A) Critical value of a field input.

B) Withdrawal of a vital module.

C) Placing a test module into the test mode.

In order to initiate a "trip" due to a critical value of a field input, the relay contact string of bistable contacts must be broken by an open contact. Dwg. D8047801 shows the various parameters which can cause the bistable trip string to lose continuity. Any of the following field conditions can cause a reactor trip:

1) Flux too high.
2) Building pressure too high.
3) Coolant temperature too high.
4) Coolant pressure too high.
5) Abnormal power/imbalance/flow condition.
6) Abnormal pressure/temperature condition.
7) Abnormal flux/pumps operating condition.
8) Coolant pressure too low.

If the reactor is in its shutdown mode, conditions 5 thru 8 above can be bypassed by a single condition of coolant pressure dropping below the "bypass" set point within the "bypass" bistable module. This module is shown in the "bypassed" portion of the trip string. The shutdown bypass is initiated in a key switch module which closes its switch contacts to energize an auxiliary relay shown just above the key switch module.

Another condition which will result in a reactor trip is the removal of any critical module in the instrumentation except for certain test modules which do not play an active role during normal monitoring of field conditions. The modules which are vital to the operation of the system are coded on the Dwg. D8047801

(see the legend at the bottom of the drawing). If any of these modules are removed from the system, the continuity of the module-interlock circuit is broken. Each module has an internal jumper which is in series with the internal jumper of the next module in the module-interlock string. When all vital modules are plugged in, the circuit will be completed from a -15 volt bus to the reactor trip module. Dwg. D8047802 shows all of the modules' jumpers which make up the complete interlock string. The test/interlock trip relay within each reactor trip module will only be energized is all vital modules are plugged in.

The text/interlock relay will be de-energized if any of the five test modules are placed into their test mode of operation. These five modules are the power range test, temperature test, flow test, pressure test, and the high building pressure contact buffer. The test switch of each of these test modules is wired in parallel with the test/interlock trip relay coil. In the test mode, the switch contact in the test module will short-out the test/interlock trip relay coil and its N.O. contact will open to de-energize the main trip relay. All of the voltage will now be across the resistor which is in series with the test/interlock trip relay coil.

A keyswitch is provided on each reactor trip module to manually bypass the trip strings, module interlocks and test trip circuitry. An indicator light shown adjacent to the manual bypass relay will be lit once the relay is energized. Note that a manual bypass can only be initiated in one out of four reactor trip modules. The keyswitch of each module is wired in series with the other three modules. Thus the key switch can only be used to energize its associated bypass relay if all other three N.C. contacts remain closed. Once the manual bypass relay in energized, two N.O. contacts close to light an indicator as well as keep the main trip relay energized. The three remaining N.C. contacts of the manual bypass relay open to prevent the other three reactor trip modules from being placed into the bypass mode.

The main trip relay of each reactor trip module has four N.O. contacts used to energize the four output relays. As long as the main trip relay remains energized, its four N.O. contacts remain closed to keep the output relays energized. However, test switches are provided to de-energize any or all of the four output relays. By switching off certain combinations of output relays, the contact logic of the output relays may be checked. This completes the discussion of the system organization. The next section will cover each of the nuclear instrumentation channels individually.

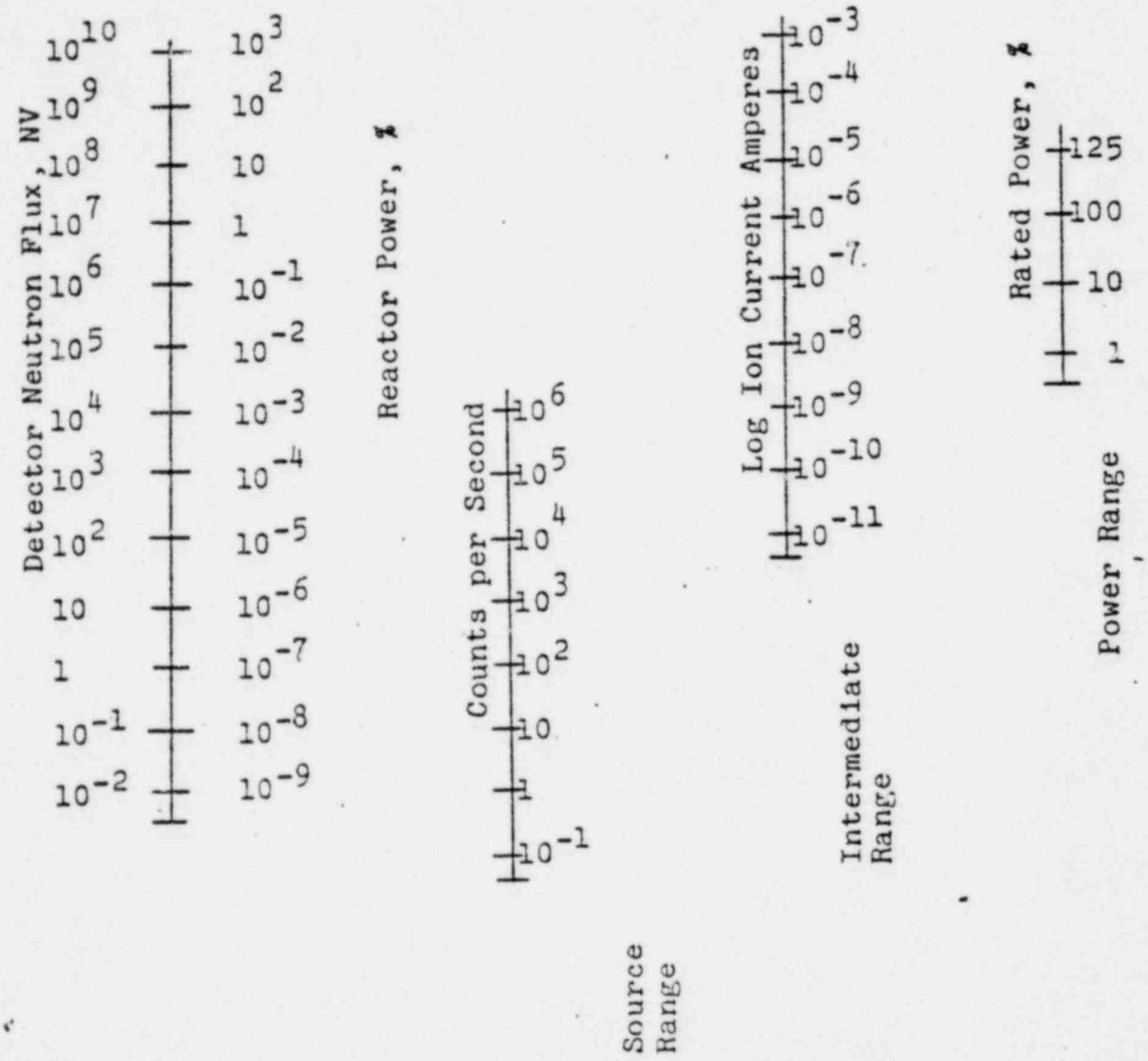

Figure 2.1 Nuclear
Instrumentation Flux Ranges

3. NUCLEAR INSTRUMENTATION SYSTEM

3.1. Introduction

The nuclear instrumentation system monitors the reactor neutron power from source level to 125% of full power and supplies signals to the operator, the reactor control portion of the ICS and the protection system. All system neutron detectors are outside the reactor vessel. The measuring span from source level to 125% of full power exceeds ten decades of neutron flux information so that three ranges of nuclear instrumentation are required:

The Source Range provides two independent logarithmic signals of neutron power over the span from below source level to six decades above source level, using two proportional counters. The overlap with the intermediate range is over two decades.

The Intermediate Range provide two independent logarithmic signals of neutron power over the span from seven decades below full power to above full power using two compensated ion chambers. The overlap with the power range exceeds two decades.

The Power Range provides four independent linear signals of neutron power over the span from 1% to 125% of full power using four uncompensated ion chambers.

3.2. System Design Criteria

Because of the essential nature of the neutron flux information derived from the nuclear instrumentation, two major design criteria have been applied to guarantee the reliability and operability of the system.

Redundancy: All nuclear instrumentation system channels are redundant with a minimum of four identical independent channels where inputs to the reactor protection system are provided and two identical independent channels where no reactor protection system inputs are provided.

Independence: Redundant channels shall be both electrically and physically independent, so that electrical or mechanical faults in one channel cannot affect the redundant channels in any way.

Three important criteria apply to guarantee that the safety of the plant is never compromised by absence of correct neutron flux information:

Availability: At least one range of nuclear instrumentation shall be on scale at all times as long as an operating core is loaded in the reactor.

Overlap: An absolute minimum of one decade of overlap shall exist between successive ranges of nuclear instrumentation.

Foldover: Each range of nuclear instrumentation shall be designed to withstand overload without foldover.

One additional criteria to guarantee plant availability is:

Serviceability: The nuclear instrumentation is designed so that routine servicing and preventive maintenance can be performed without interferring with normal Reactor or Plant operation.

3.3. Functional Description

Emphasis in the nuclear instrumentation design is placed on availability, Accuracy, Stability and Reliability. Instruments are redundant in every range and include on-line calibration capability.

The nuclear instrumentation system includes all instruments associated with the measurement of reactor leakage neutron flux with out-of-core neutron detectors, and the processing and display of leakage flux measurements as a direct measure of reactor power. Where necessary the system incorporated provisions to compensate for the presence of Gamma Radiation which is not directly related to reactor power.

The Reactor Neutron Flux must be measured at all times and at all power levels. The normal span from Source Level to Overpower Trip is approximately ten decades so that the nuclear instrumentation must provide a minimum of 12 decades, and preferably 13 decades, of neutron flux level information to allow for margins at both ends of the operating scale and for variations in Source strength.

The nuclear instrumentation has eight channels of neutron information divided into three ranges of sensitivity: source, intermediate, and power ranges. The three ranges combine to give a continuous measurement of reactor power from below source level to over 125% of full power, a full thirteen decades of information. A minimum of 2 decades of

overlapping information is provided between successively higher ranges of instrumentation. The relationship between instrument ranges is shown in Figure 2.1.

The Source Range instrumentation has two redundant count rate channels which provide neutron flux information over a counting range of seven decades from 0.1 to 10^6 counts per second. The signals originate in two high-sensitivity proportional counters on opposite side of the core. Preamplifiers in the Reactor Building are used to shape and amplify the low level pulses from the detectors, and to provide impedance matching.

Linear amplifiers amplify the voltage pulses to a useable level for the Discriminators, where background and noise pulses are discarded. The Log Count Rate Amplifier converts the neutron pulses to a signal suitable for displaying the Log Count Rate Level to the operator. Rate computers calculate the rate of change of the Log Count Rate for display to the operator. The channels measure the rate from -1 to +10 decades per minute and display the information to the operator on meters scaled from -0.5 to +5.0 decades per minute. No protective functions are associated with the Source range. However, one interlock is provided; a control rod withdrawal inhibit function.

The Intermediate Range Instrumentation has two logarithmic channels which provide eight decades of flux information in terms of log ion Chamber Current and Startup Rate. The signals originate in two identical, electrically gamma - compensated ion chambers on opposite sides of the core. The ion chamber signal output range is from 10^{-11} to 10^{-3} amperes.

Logarithmic amplifiers convert the detector output currents to signals suitable for displaying Log N level to the operator. Rate Computers calculate the rate of change of the Log N signal for display to the operators and for use in the Rod Withdrawal Inhibit Interlock. A high startup rate in either channel will initiate a Control Rod Withdrawal Inhibit Interlock. The startup rate range is from -1 to +10 decades per minute but the Operating Console meters are scaled from -0.5 to +5.0 decades per minute. Rate interlock action in both the source range and intermediate range is locked out at approximately 10% full power.

The Power Range instrumentation has four linear level channels originating in four 12-foot-long uncompensated ion chambers opposite each quadrant of the reactor core. The channel outputs are directly proportional to reactor power and cover the range from 0 to 125% of full power. Linear Amplifiers convert the detector output currents to signals suitable for displaying the reactor power level to the operator and for use in the reactor control and protection systems. Each channel includes provisions for calibrating the signals against the plant heat balance calculations.

3.4. System Description

3.4.1 Equipment Locations

Neutron Detectors - The Neutron Detectors for all channels are outside the Reactor Vessel but inside the Primary Sheilding. The Power Range Detectors are in four primary positions, 90 degrees apart around the Reactor Core and directly opposite the quadrants. Each detector extends the full height of the core in an unshielded Detector thimble.

The two Source Range Detectors, Proportional Counters, are placed on opposite sides of the core. Each detector is surrounded by lead which provides shielding against Fission - product Gamma Radiation.

The two Intermediate Range Detectors are also installed on opposite sides of the core, but they are rotated 90 degrees from the source range detectors.

Preamplifiers - The Source Range Preamplifiers are inside the Reactor Building as close as possible to the Source Range Detectors, perferably within 50 feet of them. They are placed outside the Primary Shield area to keep them out of the high neutron and gamma flux and to make them reasonably accessible for replacement or maintenance.

System Cabinets - The nuclear instrumentation system amplifiers, test and calibration equipment are housed in eight cabinets defined as Nuclear Instrumentation and Reactor Protection System cabinets. These are located in the control room. Each redundant nuclear instrumentation channel occupies a different system cabinet or two-cabinet subassembly to provide maximum electrical and physical separation, and each subassembly is powered from a different vital bus.

Operator Readouts - The reactor power level and rate meters and recorders, which provide signals to the operator from the nuclear instrumentation channels are mounted on the console.

System Cabinets and Modules - The nuclear instrumentation (along with the reactor protection system) is housed in eight standard, free-standing system cabinets made of 1/8 inch-thick steel; the cabinets measure 2x2x7 feet. They are bolted together to form assemblies with the required number of cabinets.

The equipment is mounted in individual mounting boxes arranged in a vertical row in the cabinet. Up to ten of these mounting boxes or terminal panels, each measuring 7 inches high by 17.5 inches wide by 11.5 inches deep, can be mounted in a single cabinet.

All external wiring to the equipment is terminated at terminal panels mounted in the bottom or top of the cabinet. Individual wires are terminated on barrier-strip terminal blocks. Preformed cables are terminated in Blue Ribbon connectors with latches. Low-level signals carried into the cabinet via shielded coaxial or triaxial cables are connected directly into the equipment modules instead of into terminal panels. High-voltage wiring to the detectors is also connected directly to the equipment modules with triaxial or coaxial cables to minimize the potential for shock hazard.

Forced-air cooling is provided in each cabinet. A fan mounted on top of the cabinet forces filtered air horizontally through each of the equipment mounting boxes. Power-dissipating components in the equipment modules are in the direct stream of air flow allowing efficient cooling. A Fan-Failure Detector provides a means to annunciate the loss of cooling.

Two system power supply packages are provided for each of the four pairs of system cabinets. These supplies are operated from an 118 volt AC line and provide regulated DC outputs of plus and minus 15 volts. Each power supply is mounted at the mounting box. The power is distributed from these supplies to the modules that comprise that protection system.

Standard plug-in modules house the remainder of the instrumentation equipment. The module mounting boxes are divided into 15-unit widths. Two sizes of modules are used in the system: 2 units wide and 3 units wide. The equipment inside a module is mounted on a number of plug-in cards mounted vertically. All switches, adjustments

and indicating devices intended for routine maintenance and calibration are mounted on, or are accessible from the front panel of the modules. The modules connect to the wiring on the back of the mounting boxes via 32 pin connectors. A two unit-unit wide module has space for two connectors, and a three-unit wide module has space for three.

3.4.2 Source Range Channels

The two source range channels (NI-1 and NI-2) are identical. They are shown functionally in Figure 3.2. Each channel consists of the following components:

1. A proportional Counter Assembly
2. Preamplifier
3. Log Count Rate Amplifier
   a. Linear Amplifier
   b. Discriminator
4. Rate of Change Amplifier
5. Output Metering
6. Rate Interlocks (Bistable)
7. Source Range Test Module
8. Detector Power Supply

Proportional Counters - The Proportional Counters are designed to detect neutrons at thermal energies in the range from 1.7×10^{-2} to 1.7×10^{5} neutrons/cm^2 / second. These detectors are multi-element counter assemblies.

The detectors consist of Proportional Counter Units, in a hermetically sealed aluminum outer core permitting operation in high-humidity environments. The materials used in those detectors have been selected for low activation properties. The terminal neutron sensitivity is approximately 50 counts/neutron / cm^2. Each detector is mounted in a housing assembly which serves to electrically insulate the detector case from ground and to provide convenient and rugged means of handling the detector during installation and removal from the Detector thimble.

Preamplifier - The source range preamplifier is the only nuclear instrumentation module mounted outside the system cabinet. The preamplifier is packaged in a double-box arrangement to minimize difficulties from continued operations in a high-humidity environment. The inner box contains the electronics and is insulted from the outer box. The power supply and signal connectors are mounted on the outer box. Because of the low signal levels triaxial cable is used for the signal lines.

The preamplifier is of the type known as "charge Sensitive"; that is, its output voltage is proportional to the amount of charge appearing at its input. This approach provides compatibility with the output of the proportional counters, which transmit an impulse of charge for each radiation event. Refer to Product Instruction Manual E92-311 for the specific operating characteristics of the preamplifier.

Detector Power Supply - The Source Range Proportional Counters operate at a high voltage and consequently require a source of well-regulated high DC voltage. This comes from the Detector Power Supply Modules provided in each source range channel and mounted in the source range channel cabinets. Each Detector Power Supply Module is connected to its preamplifier by shield cables. The supplies have stability and regulation within ±1% and less than 200 millivolt output ripple.

In addition to its basic function, each Detector Power Supply has local and remote high-voltage turnoff, overvoltage cutoff, current limiting and outputs for remote indication of voltage and annunciation of voltage ON-OFF.

The Detector Power Supply is a regulated DC to DC converter operating from the cabinet plus and minus 15 volt channel power supply. An oscillator and power amplifier provide a sinusoidal input to a voltage step-up transformer. The high voltage AC output of the transformer is rectified and further stepped up in a voltage multiplier. A fraction of the DC output is compared with a reference Voltage in a Comparator Amplifier which controls the oscillator output amplitude to maintain the operating voltage.

The Detector Power Supply is packaged in a 3-unit wide module. The module front plate contains a meter to indicate the output voltage, a voltage adjustment potentiometer, and ON-OFF switch, a limit reset switch, and a test jack for measuring the output voltage divided by 1,000. Refer to Product Instruction Manual E92-332 for the operating characteristics of the detector power supply.

- Count Rate Amplifier Module - The count rate amplifier provides a d-c output in the range of 0 to 10 volts, proportional to the logarithm of the input pulse rate in the range of 0.1 to 10^6 pulses per second.

The count rate amplifier consists of four basic sections: a pulse amplifier, pulse height discriminator, log count rate circuit, and output isolation buffer amplifiers. The input

pulses, with typical amplitudes of a fraction of a volt, are applied to the pulse amplifier, which has an input impedance to match the input triaxial cable. The gain of the pulse amplifier is continuously adjustable from 4 to 10. Sufficient resolving time (100 nanoseconds) has been designed into the pulse amplifier circuitry to ensure that no significant count loss occurs in the amplification stage. The output of the Pulse Amplifier is applied to the Discriminator, which is a high-gain amplifier with an adjustable threshold. The threshold can be set to reject noise pulses of smaller magnitude than the signal pulses, thus discriminating between a signal and noise. Standardized magnitude signal output pulses from the Discriminator drive a Binary Flip-flop. The Flip-flop output provides complementary inputs to the Log Count Rate circuit via power amplifiers. The Log Count Rate circuit consists of five classic diode pump circuits (commonly called a Cooke-Yarborough circuit) whose outputs are summed in an operational amplifier. This combination produces a DC voltage output proportional to the logarithm of the average input pulse repetition rate. Standard Buffer Amplifiers at the output furnish isolation between the various output signal paths.

The count Rate Amplifier is packaged in a standard 3-unit-wide module with plug-in cards for component mounting. A meter calibrated in counts per second is mounted on the module front, along with adjustments for pulse amplifier gain, discriminator threshold level, and output zero and range. Test jacks are provided for signals used during on-line testing. Refer to Product Instruction Manual E92-312 for the operating characteristics of the Count Rate Amplifier Module.

Rate-Of-Change-Amplifier Module - During reactor start-up, the rate of increase of Neutron Flux is an important parameter for operator monitoring. The Rate-of-Change Amplifier receives a 0 to +10 volt input from the count rate amplifier which is proportional to the logarithm of the Neutron Flux level. Since changes in neutron flux during startup tend to be exponential, the input to the Rate-of-Change amplifier tends to be a linear ramp when neutron flux is changing. The Rate-of-Change amplifier output is 0 to +10 volts, corresponding to a rate of change of minus 1 to plus 10 decades per minute. Since purely theoretical derivative amplifiers tend to be extremely sensitive to high frequencies, a low-pass filter is incorporated in the circuitry.

The Rate-of-Change amplifier is packaged in a standard 3-unit-wide module. On the front plate are a meter calibrated in decades per minute, zero and range adjustment potentiometers, and an output test jack used for on-line testing

and calibration. Refer to Product Instruction Manual E92-313 for the important operating characteristics of the rate-of-change amplifier.

Bistable Module - Bistables are used to convert Analog input signals to Digital output signals in the form of relay contacts when a set point value is reached. The Bistable module compares two Analog inputs in the range of 0 to +10 volts DC, one from an external signal source and the other from either an external source or an internal variable trip point power supply. The Bistable can be connected to trip on either an increasing or decreasing signal.

An adjustable deadband, or hysteresis, is included to ensure positive switching action at the trip set point even with noise or small variations present in the input signal. An "inhibit" input, normally supplied by a relay contact, allows the trip action of the module to be negated. A memory circuit, which must be reset manually, is included to indicate whether the module has been tripped or not.

The Bistable is packaged in a standard 2-unit-wide module. On the front plate are lights to indicate the trip state of the Bistable and the state of the Bistable Memory. There are two momentary toggle switches for resetting the state and also the memory. There are two potentiometers with turncounting dials which are used for adjusting the set point of the Bistable and the Deadband. Test Jacks are provided for measuring the input, Set Point voltage and the Deadband voltages. Refer to product Instruction Manual E92-341 for the operating characteristics of the bistable module.

Source Range Test Module - This module generates simulated input signals for on-line testing of the Count Rate Amplifier, Rate-of-Change Amplifier, and the Bistables, which comprise the source range channel of neutron flux monitoring equipment. The Source Range test module can be used for on-line testing during normal reactor power operation or during reactor shutdown, but not during reactor startup when the channel is active. The test signals applied successively to the count rate amplifier are variable amplitude pulses with repetition rates of 100 K Hz, 4 K Hz, and 1 Hz. The use of signals at three points of the range also checks the logarithmic conformity. The next test condition is the injection of a variable DC voltage near the Count Rate amplifier output to check the set points and the correct functioning of the bistables connected to the Count Rate amplifier output.

The test signals applied to the Rate-of-Change amplifier are a zero input for checking amplifier zero and a 0.025 Hz sawtooth wave with a slope of 10 decades per minute for checking amplifier range. In addition, a variable DC voltage is fed via the Rate-of-Change Amplifier to Bistables connected to its output for checking Bistable Set Points and functional operation.

The Source Range test module is packaged in a standard 3-unit-wide module. On the front plate are an "on test" indicator light, a multi-position rotary test switch, a calibration output potentiometers for the variable DC voltage, a Pulse Amplitude Potentiometer for the pulse rate signals, a reset switch for control of the sawtooth generator, and test jacks for the ramp (sawtooth) output and its sync pulse and for the plus 10 volt reference and the pulse amplitude output. Refer to Product Instruction Manual E92-321 for the details of the Source Range Test module operation.

3.4.3. Intermediate Range Channels

Functionally, the Intermediate Range is more simple than the Source Range channels because of the analog- rather than the digital-nature of the intermediate range Neutron Detectors. As shown in Figure 3.3, the two intermediate range channels (NI-3 and NI-4) are identical, and each consists of the following components:

1. Compensated Ion Chamber
2. Logarithmic Amplifier
3. Rate of Change Amplifier
4. Output Metering
5. Rate Interlock (Bistable)
6. Intermediate Range Test Module
7. Detector & Auxiliary Power Supplies

Compensated Ion Chambers - The compensated ionization chamber is designed to detect thermal neutrons in the range from approximately $2x10^{-11}$ to $2x10^{-2}$ neutrons cm^2/second in the presence of large gamma fields.

The detector incorporated both guard-ring construction (to minimize insulator leakage) and continuously variable electrical compensation. The neutron sensitivity of the chamber is approximately 10^{-14} amperes/neutron/cm^2/sec. Gamma sensitivity is less than $2.3x10^{-11}$ amperes/R/hr when operated uncompensated, but it is reduced to $2.3x10^{-13}$ amperes/R/Hr in compensated operation, thus extending the usual operating range by two decades. The detector is constructed of high purity materials to reduce the effect of induced radioactivity.

Each compensated ion chamber is mounted in a housing assembly which serves to electrically insulate the detector case from ground and to provide a convenient and rugged means for handling the detectors during installation and removal from its thimble.

Detector Power Supply - The compensated ion chambers in the intermediate range will be operated at a voltage, which depends upon the exact full power neutrons flux and the amount of overpower measurement capability desired. As a result the Compensated Ion Chamber Detector Power Supply Modules will be functionally identical to those in the source range channel described in section 3.4.2.

Auxiliary Power Supply - The Auxiliary Power Supply provides the necessary negative voltage to the compensating electrode in the compensated ion chamber. A range of regulated voltage from -5 to -300 volts DC is available. The normal compensating voltage required is -20 to -65 volts DC. Typical voltage and current requirements for compensation are -50 volts and 10 nanoamperes.

The basic regulator and auxiliary circuits of the Auxiliary Power Supply Module are identical to those of the Detector Power Supply Module described in section 3.4.2. The Auxiliary Power Supply Module is packaged in a 3-unit-wide module. The module front plate has a meter to indicate voltage, a voltage adjustment potentiometer, an ON-OFF switch, a limit reset switch, and a test jack for measuring the output voltage divided by 100. Refer to product instruction manual E92-333 for the operating characteristics of the Auxiliary Power Supply Module.

Logarithmic Amplifier Module - This module provides an output signal range of 0 to +10 volts dc, proportional to the logarithm of the input signal current range of 10^{-11} to 10^{-3} amperes DC. The resulting output slope is 1.25 volts per decade of input current. The logarithmic amplifier comprises three sections: a Logarithmic Circuit, a Temperature Compensation Circuit, and Output Isolation Buffer Amplifiers. The Logarithmic Circuit uses an Operational Amplifier with a transistor feedback element. The feedback transistor used follows very closely the theoretical expoential relationship of collector current to base-emitter voltage over the required eight decades. The result of using the transistor as a feedback element in the Operational Amplifier is a logarithmic conversion of input current to output voltage. A second Operational Amplifier with transistor feedback and a reference current input is used for temperature compensation. Standard

Buffer Amplifiers on the output furnish isolation between the various output signal paths.

The logarithmic Amplifier is packaged in a standard 3-unit-wide module. The module front plate contains a meter calibrated in terms of the input current, along with adjustments for amplifier balance and calibration. Test jacks are provided for signals used during on-line testing. Refer to product instruction manual E92-314 for the operating characteristics of the Logarithmic Amplifier Module.

Rate-of-Change Amplifier Module - This module in each of the intermediate range channels if identical to the Rate-of-Change Amplifier in each of the source range channels described in section 3.4.2. In the intermediate range, however, each Rate-of-Change Amplifier receives a 0 to +10 volt input signal from the Logarithmic Amplifier, which is proportional to the logarithm of the neutron flux level. The Rate-of-Change Amplifier output is 0 to +10 volts, corresponding to a rate of change of -1 to +10 decades per minute.

Bistable Module - The Bistable Modules in the intermediate range channels are identical to those described for the source range channels in section 3.4.2. In the intermediate range channels, they will function to initiate a rod withdrawal inhibit. Also there is a Bistable at the output of each Logarithmic Amplifier to initiate Source Range Detector Power Supply Cutoff automatically to prevent exceeding the maximum operating flux limits on the proportional counter detectors.

Intermediate Range Test Module - The Intermediate Range Test Module generates simulated input signals for on-line testing of the Logarithmic Amplifier, Rate-of-Change Amplifier, and bistables which make up the intermediate range of neutron flux monitoring equipment. The intermediate Range Test Module can be used for on-line testing during normal reactor power operation or during reactor shutdown, but not during reactor startup when the channel is active. A stable voltage source and precision resistors are used to generate simulated current input signals to the Logarithmic Amplifier at 10^{-5} amperes, 10^{-8} amperes, and 10^{-11} amperes. The use of signals at three points of the range also checks the logarithmic conformity. An amplifier balance test position is also provided. The module also has facilities to inject a variable DC voltage near the Logarithmic Amplifier output to check the set points and the correct functioning of bistables connected to the Logarithmic Amplifier output.

The test signals available to the Rate-of-Change Amplifiers are a ZERO rate input for checking amplifier zero and a 0.025 Hz sawtooth wave with a slope of 10 decades per minute to check amplifier range. In addition, a variable DC voltage can be inserted at the Rate-of-Change Amplifier output to check bistable set points and functional operation.

The Intermediate Range Test circuit is packaged in a standard 3-unit-wide module. On the front plate are an "on-test" indicator light, a multiposition rotary test switch, a calibration output potentiometer for the variable DC voltage, a reset switch for control of the sawtooth generator, and test jacks for the ramp (sawtooth) output and its sync pulse and for +10 volt reference. Refer to Product Instruction Manual E92-322 for details of operation.

3.4.4. Power Range Channels

The Power Range Channels are functionally less complex than either of the other instrument ranges. The two detectors that make up the long Ion Chamber in each channel shown in Figure 1.4 are summed by the Summing Amplifier so that the signal measured is the sum of the two detector outputs.

The bottom and top detector outputs drive Linear Amplifiers, whose function is to raise the signal to a useful level. Basically, each power range channel consists of the following components:

1. Uncompensated Ion Chambers
2. Linear Amplifiers
3. A Summing Amplifier
4. A Difference Amplifier
5. A Function Generator
6. Output Metering
7. Power Supply
8. Detector Power Range Test Module
9. Bistables

Uncompensated Ion Chambers - The Uncompensated Ionization Chambers are designed to detect thermal neutrons at flux levels from 1×10^{6} to 2.5×10^{10} neutrons/cm^2-second. Each detector assembly consists of two 70 inch long neutron-sensitive sections. The bottom section will cover the bottom section of the core and the top section will cover the top half of the core.

The thermal Neutron Sensitivity of each section of the detector is approximately 1.3×10^{-3} amperes/neutron/cm^2/second. The uncompensated gamma sensitivity of each section is approximately 1×10^{-10} amperes/R/HR.

Detector Power Supply Module - The uncompensated ion chambers in the power range will be operated at a voltage which, depends on the exact full power Neutron Flux. As a result the uncompensated Ion Chamber Detector Power Supply Modules will be identical to those in the source and intermediate ranges described in sections 3.4.2 and 3.4.3. One power range Detector Power Supply Module in each system cabinet is directly connected by triaxial cable to the high-voltage connections on the detector.

Linear Amplifier Modules - The Linear Amplifier provides a 0 to 11.5 volt d-c output signal proportional to reactor power from 0 to 7.5%, as determined by current signals from the power range uncompensated ion chambers. There are two Linear Amplifiers on each channel, one for the top ion chamber and one for the bottom ion chamber. The amplifiers accept currents with a full-scale range of 10^{-6} amperes to 10^{-3} amperes. The Linear Amplifier consists of two basic sections: a precision linear current-to-voltage converter and output isolation buffer amplifier. Prime consideration in its design are high accuracy, typically 0.05% and rapid response, both required for reactor protection. Standard buffer amplifiers at the output guarantee isolation between the various outputs going to protection, control, indication and recording devices.

The Linear Amplifier is packaged in a standard 3-unit-wide module. On the front plate are: a meter calibrated from 0-72.5% of full power, an indicator to show the setting of the internal link which sets the Coarse Range Gain, a 10-position switch for fine gain adjustment, and a potentiometer with a 10-turn counting dial for extra fine gain adjustment, plus a zero adjustment potentiometer and an output test jack. See Product Instruction Manual E92-315 for a detail discussion of the module.

Sum/Difference Amplifier - There are two Sum/Difference Amplifiers in each Power Range Channel. One amplifier is used to take the sum of the two linear amplifier outputs, which is an indication of the total Reactor Flux. The second amplifier is used to take the difference between the two Linear Amplifiers, which is an indication of the difference between the Reactor Flux in the top of the core versus the Reactor Flux in the bottom of the reactor core. See Product Instruction Manual E92-317 for the details of the amplifier operation.

Function Generator - The Function Generator has two inputs and one output. One input to the Function Generator is the output of the Difference Amplifier ($\Delta\emptyset$). The second input is from the flow channel.

Refer to figure 4.4. The signal f(Δ Ø) denoted in figure 4.4 is a piece-wise linear function of the input (Δ Ø).

The breakpoints denoted as B1, B2, B3 and B4 on the curve, are adjustable at the module frontplate. The two slopes (m_1 and m_2) are also adjustable from the frontplate of the module.

The output of the Function Generator is used as the set point signal for the power imbalance/flow bistable.

See Product Instruction Manual E92-358 for a detailed description of the Function Generator Module.

Power Range Test Module - The function of the Power Range Test Module is to provide complete testing of the Power Range Channel by means of internally generated test signals. When in the Operate mode, the Power Range Test Module accepts current signals from two sections of the out-of-core detectors and applies each to the input of a Linear Amplifier.

Other functions include the following:

1. A test operate switch position to allow on-line troubleshooting of the channel.
2. Zero and range switch positions to allow complete Linear Amplifier calibration.
3. Manually variable test signals for testing and/or calibration of the Sum/Difference Amplifiers Function Generator and Bistable modules in the Power Range Channel.

Refer to Product Instruction Manual E92-323 for a detailed description of the module operation:

Averaging-Auctioneering Modules

Refer to fig. 3.5 and functional description 4.8

The average module is on application of the sum/difference amplifier module as described in Product Instruction Manual E92-317. Power channels NI-5 and NI-6 are averaged independent of channels NI-7 and NI-8 by seperate average modules. Each average module includes a built-in analog average meter.

The function of the auctioneer module is to output a signal which equals the greater of its two inputs. The output of the auctioneer module is an average power signal to the ICS which equals the greater of its two inputs; either the average of power channels NI-5 and NI-6 or the average of power channels NI-7 and NI-8.

See Product Instruction Manual E92-359 for a detailed description of the auctioneer module.

Figure 3.2 Block Diagram of a Source Range Channel

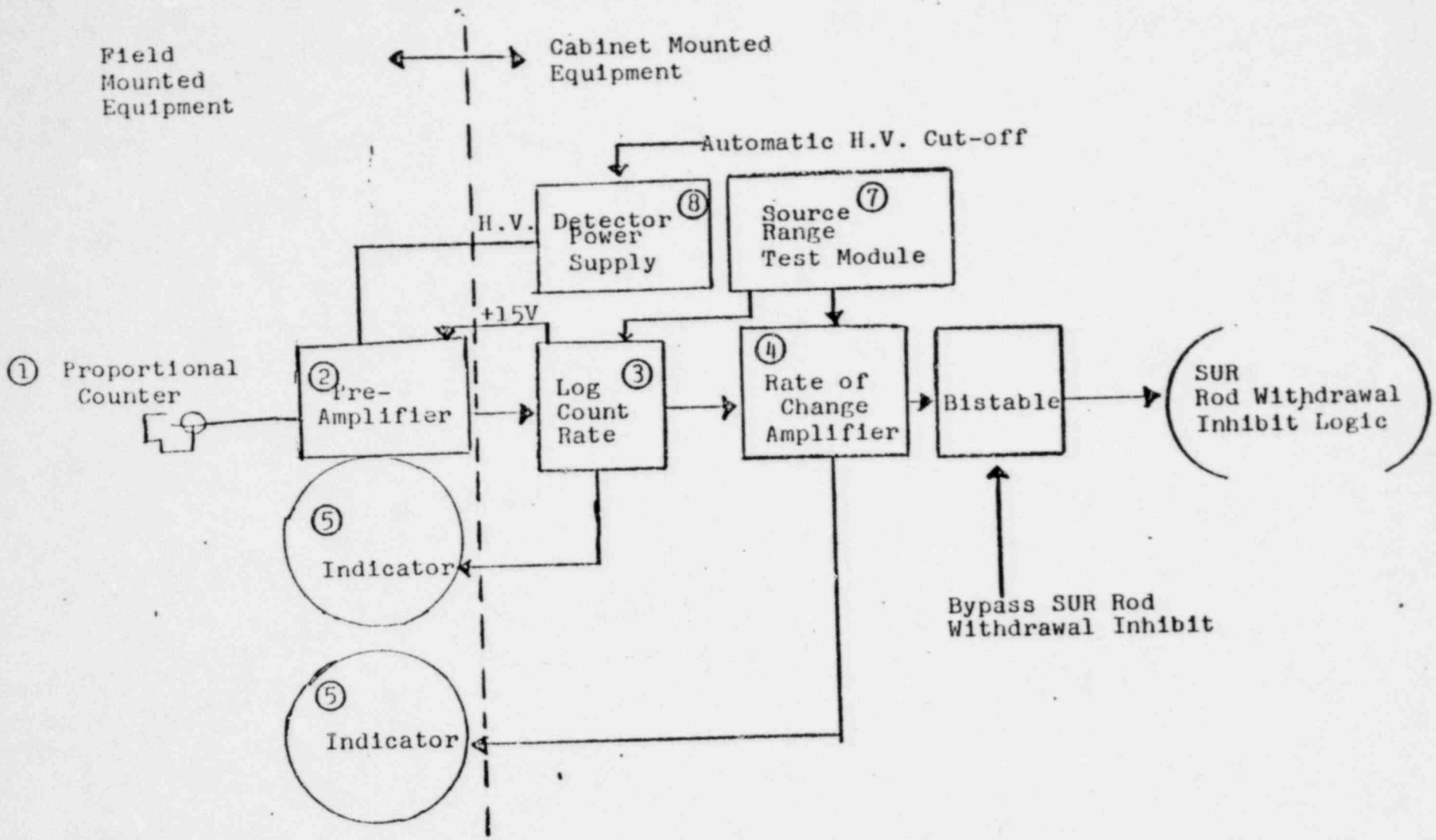

Figure 3.3 Block Diagram of an Intermediate Range Channel

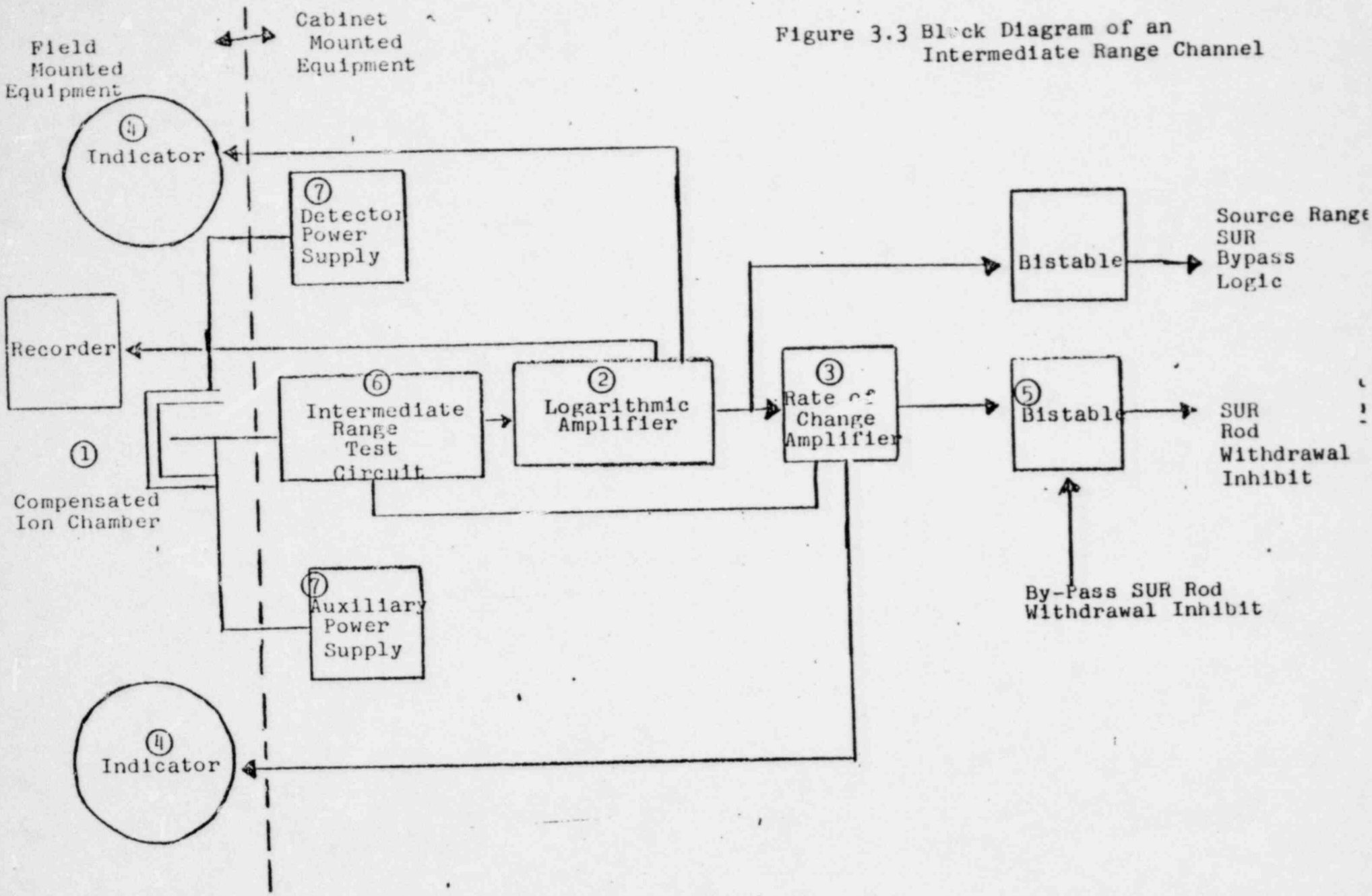

FIGU 3.4

Block Diagram of a Power Range Channel
from Contact Monitor Channel

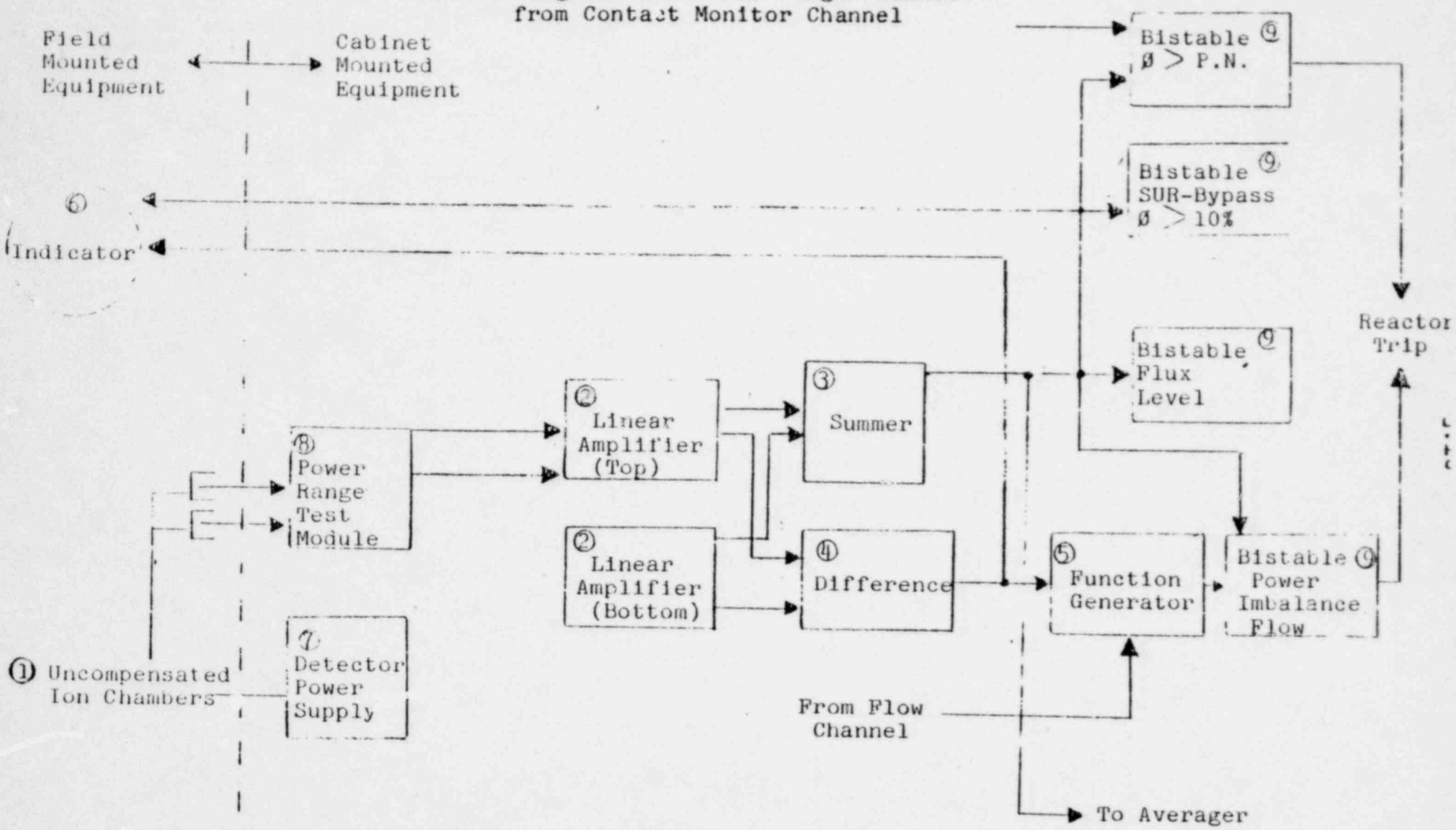

FIGURE 3.5

Block Diagram of Auctioneered Power

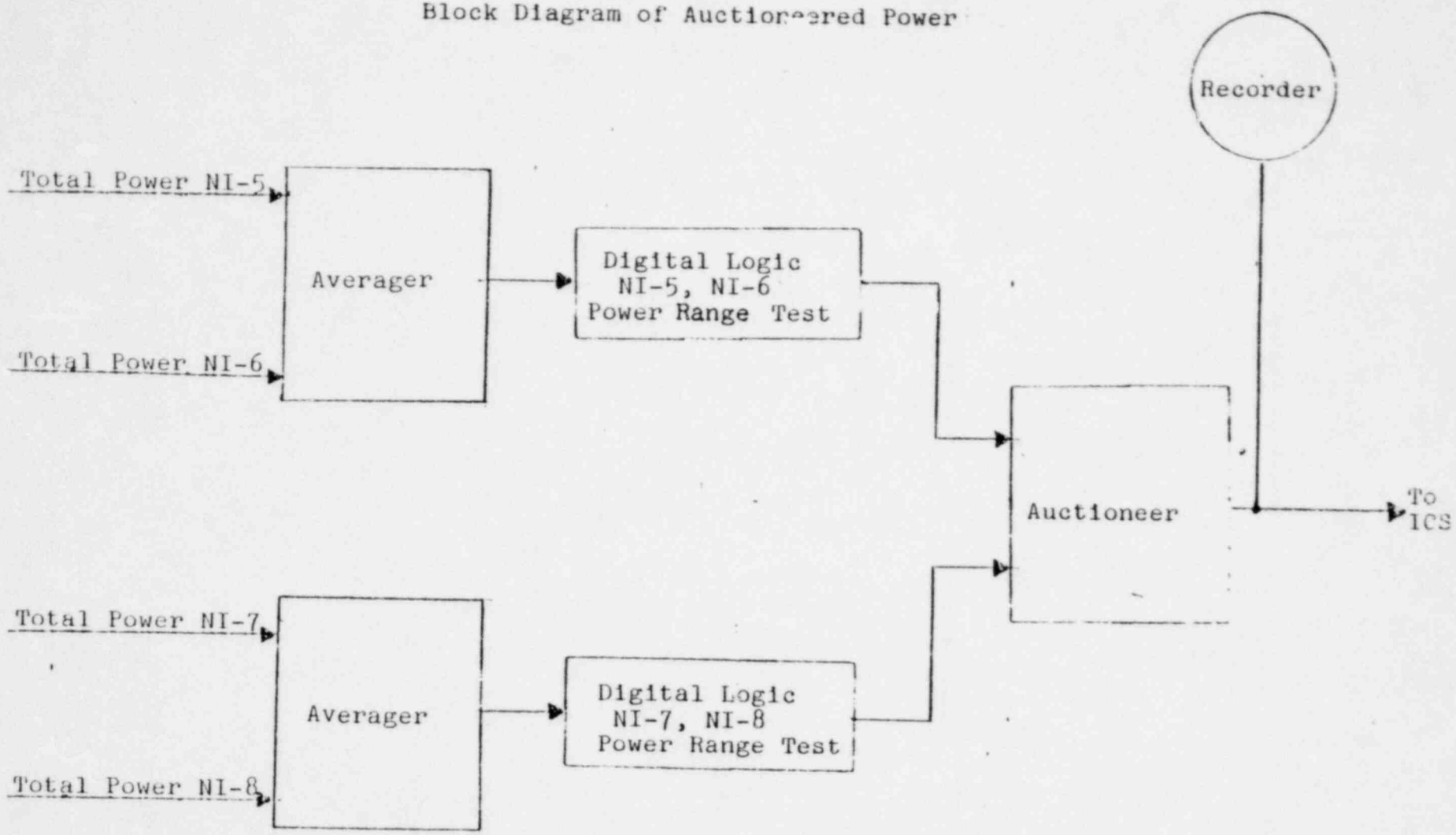

4. REACTOR PROTECTION SYSTEM

4.1 Introduction

The Reactor Protection System is a four-channel system which receives redundant inputs from both Nuclear and Non-Nuclear instrumentation and initiates a reactor trip when any two of the four channels agree that a safety limit has been exceeded. The system is designed to protect the Reactor Coolant System against high-pressure damage.

4.2 System Design Criteria

The Reactor Protection System performs the most important of all protection functions in the plant - that of protecting the Nuclear Reactor from damage. The design criteria applied, therefore, are the most extensive and restrictive of any applied to a plant system to guarantee reliable operation. The entire system is designed to meet, and in many instances to exceed, the requirements of the proposed IEEE "Criteria for Nuclear Power Plant Protection Systems" dated August, 1968, more commonly known as IEEE 279.

Single Failure - The Reactor Protection System must meet the single-failure criterion of IEEE 279, which states that no single failure shall prevent a protection system from fulfilling its protective functions when action is required. In addition, although not required by IEEE 279, the system must meet the plant reliability criterion that no single failure shall initiate unnecessary protection system action where implementation does not conflict with the single-failure criterion of the IEEE.

Redundancy - IEEE 279 requires that the reactor protection system channels and their associated inputs and outputs shall be both electrically and physically independent, so that electrical or mechanical faults in one channel cannot affect the redundant channels in any way.

Separation - IEEE 279 requires separation of protection and control. Where inputs to the reactor protection system also provide inputs to control system functions, only one string of redundant instrumentation shall be connected at any one time to the control system, and electrical independance shall be assured through the use of isolation amplifiers.

Manual Trip - IEEE 279 requires that manual trip switches, independent of the automatic trip instrumentation, shall be provided.

Availability - Manual testing facilities shall be built into the reactor protection system and its inputs and outputs to provide for preoperational testing to give assurance that the system can fulfill its required protective functions and on-line testing to prove operability and to demonstrate reliability without interferring with normal Reactor or plant operation or trip functions.

Loss of Power - Loss of power to any part of the reactor protection system shall cause the affected channel to trip.

Equipment Removal - The removal of a Reactor Protection System Module from its system cabinet shall initiate a trip in the affected channel.

4.3. Functional Description

The four Reactor Protection System Channels are identical and are required to trip the reactor when any two of the four system channels indicate any of the following conditions:

1. The reactor power, as measured by the neutron flux, exceeds a preset maximum limit.
2. The Reactor Power, as measured by the neutron flux, exceeds a variable maximum limit set by a function of the Reactor Coolant Flow Measurement and the difference between the flux level in the top and bottom of the reactor core.
3. The reactor power, as measured by the neutron flux, exceeds a variable maximum limit set by the number of reactor coolant pumps operating.
4. The Reactor Coolant Temperature exceeds a preset maximum limit.
5. The Reactor Coolant Pressure exceeds a preset maximum limit.
6. The Reactor Coolant Pressure falls below a preset minimum limit.
7. The Reactor Coolant Pressure falls below a variable minimum limit set by reactor coolant temperature.
8. The reactor building pressure exceeds a preset maximum limit.

4.4. System Descr' . ion

4.4.1. Sy.tem Logic

The 'stem, as shown in the analog logic block diagram, E30402' comprises four identical protection channels, identified as channels A, B, C, and D, each of which terminates in a channel trip relay within a Reactor Trip Module. The entire system functions as a "de-energize to trip" system. All input bistable contacts are connected in series, so that, in the normal untripped state, each channel functions as an AND gate, passing current to the terminating channel trip relay and holding it energized as long as all channel inputs are in the normal, energized (untripped) state. Should any one or more inputs to a channel become de-energized (tripped), the terminating channel trip relay in that channel de-energizes (trips). Thus, for trip signals, each channel becomes an OR gate.

A normally energized, closed interlocking contact in series with the Channel Trip Relay, opens when a module is removed from the channel or placed in the Test Mode. Each of the four channels terminates in a channel trip relay within a reactor trip module. There are four such modules. Each channel trip relay has four contacts, each of which controls a Logic Relay in one reactor trip module. Therefore, each Reactor Trip Module has four logi lays controlled by the four protection channels.

The Reactor Trip Modules are given the same designation as the protection channel whose Trip Relay they contain and in whose cabinet they are physically located. Thus, the channel A reactor trip module is in protection channel A cabinet, etc. The coincidence logic in each Reactor Trip Module controls one or more breakers in the Control Rod Drive Power System.

The coincidence logic in the Reactor Protection System channel A reactor trip module controls breaker A in the control rod drive system; channel B reactor trip module controls breaker B; channel C reactor trip module controls breakers C and E; and channel D reactor trip module controls breakers D and F.

4.4.2. System Monitoring

The modules, Logic, and Analog equipment associated with a single protection channel are contained wholly within two reactor protection system cabinets. Within these cabinets, there is a meter for every Analog signal employed

by the protection channel and a visual indication of the state of every logic element. At the top of one cabinet, and easily visible at all times, is a channel indicating panel. Lamps on this panel give a quick visual indication of the trip status of the particular channel.

In addition to the visual indications and readouts within the channel cabinets, each trip function, power supply, analog signal, and interlock is monitored by external indicating devices.

4.4.3. Reactor Trip Summary

The abnormal conditions that initiate a reactor trip are summarized in Table 4.1.

TABLE 4.1 REACTOR TRIP SUMMARY

Trip Variable	No. of Sensors	Condition for Trip
Neutron Flux	4 Flux Sensors	High flux.
Neutron Flux/ Reactor Coolant Pump Comparison	4 Flux Sensors 32 Pump Monitor contacts (2 per pump)	Flux/number reactor coolant pumps operating comparison
Reactor Outlet Temperature	4 Temperature Sensors	High temperature
Pressure	4 Pressure Sensors	High pressure Low pressure
Pressure/Temp.	4 Pressure Sensors 4 Temperature Sensors	$(KT-b-P) > 0$
Neutron/Flux Reactor Coolant Flow Comparison	4 Flux Sensors 8 Flow Tubes	The neutron flux exceeds an envelope function dependent on delta flux and reactor coolant flow.
Reactor Building Pressure	4 Pressure Sensors	Reactor Building Pressure

4.4.4. Description of Channel Trip

The protective functions of the Reactor Protection System described below apply to each of the four channels.

1. Overpower - The nuclear instrumentation provides a Linear Neutron Flux signal in the power range as an indication of reactor power to a protection

system Bistable Module. When the Neutron Flux signal exceeds the trip point of the bistable, the bistable trips, de-energizing the associated Channel Trip Relay.

2. Power/Reactor Coolant Pumps Trip - The reactor coolant pump power is monitored to determine that the pumps are running. The detection of a disabled pump initiates four independent signals, one to each protective channel. This information is received by a pump monitor logic which counts the number of reactor coolant pumps in operation and identifies the coolant loop in which the pumps are operating. The pump monitor logic output controls the trip point of a power/pump comparator, and initiates a channel trip.

3. Reactor Outlet Temperature Trip - The reactor outlet temperature is measured by resistance elements. The bridge for each resistance element is considered a part of, and is within, its associated protection system channel. The reactor outlet temperature signal goes directly from the temperature bridge to a Bistable Module. When the temperature exceeds the trip of the bistable, the bistable trips, de-energizing the channel trip relay.

4. Reactor Pressure Trip - The Reactor Coo[illegible] Pressure signal from the pressure transmitter is received by an isolation module in the associated protection channel. This buffer amplifier acts as a signal conditioner and isolation unit. Pressure signals go to a High-Pressure Bistable Module and a Low-Pressure Bistable Module. When the pressure exceeds the Trip point of the High-Pressure Bistable, the bistable trips, de-energizing the Channel Trip Relay. The Low-Pressure Bistable trips when the pressure falls below the trip point, tripping the channel trip relay.

5. Pressure-Temperature Trip - Figure 4.2 shows the operating reactor pressure-temperature boundaries formed by the combined reactor high temperature, high pressure, low pressure, and the pressure-temperature comparator trip settings. The Pressure-Temperature Comparator trips when the relation $KT - b \geq P$ is reached by a combination of rising temperature or falling pressure. (T is reactor outlet temperature in degrees F, and P is reactor coolant pressure in psig.) The comparator forms the sloping boundary line in Figure 4.2.

6. Power Imbalance/Flow Trip - A power imbalance/flow (Ø/Δ Ø/F) comparator is included in each protection channel. Each comparator receives Ø and Δ Ø inputs from a different power range channel. The comparator, bistable, trips de-energizing the channel trip relay, when $Ø > f(F) + f(\Delta Ø)$. f(F) and f(Δ Ø) are illustrated in figures 4.3 and 4.4. f(F) = KF where K is the power/flow trip ratio and F is the total reactor coolant flow in per cent full flow. The constant K is an adjustment and has a minimum range adjustment of 1.00 to 1.20.

7. Reactor Building Pressure - Each protection channel continuously monitors the state of an independent, normally closed, reactor building pressure switch. Momentary change of a pressure switch to the open state initiates a trip of the associated protection channel. The reactor building high pressure trip locks in, requiring manual reset. Contacts are provided and wired out to terminal boards to indicate a reactor building high pressure trip condition to the plant computer. The contacts open to indicate a trip condition.

4.4.5. Conformance With Design Criteria

Single Failure - In evaluating system performance, it is arbitrarily assumed that "failure" can either prevent a Channel Trip from occurring or can initiate Channel Trip action. Each Reactor Protection System input operates in a true 2-out-of-4 logic mode, so that the failure of an input leaves the system in either a 2-out-of-2 or a 1-out-of-2 logic mode, with either state providing sufficient redundancy for reliable performance.

The system can tolerate several input function failures without a reduction in performance capability, provided the failures occur in unlike variables in different channels, or are of a different mode in different channels, or all occur within one channel. When a single protection channel fails, the system is left in either 2-out-of-3 logic mode, or a 1-out-of-3 logic mode, as explained below.

The Channel Trip Relay of each channel is in a Reactor Trip Module associated with each channel. Within each Reactor Trip Module is a Logic Relay for each protection channel. These combine in each module to form the 2-out-of-4 logic. A failure mode and effects analysis of the Reactor Trip Module has demonstrated that single failures within the module or in its interconnections can produce only the following effects.

1. Trip the breaker associated with the module.

2. Place the system in a 2-out-of-3 mode, as if the associated channel had suffered a "cannot-trip failure.

3. Place the system in a 1-out-of-3 mode, as if the associated channel had tripped.

The combination of Reactor Trip Modules and Control Rod Drive Breakers forms a 1-out-of-2 X 2 logic. At this level the system will tolerate a "cannot-trip" type of failure of one Reactor Trip Module, or of the breakers associated with one Reactor Trip Module without degrading the system's ability to trip all Control Rods. The failure analysis demonstrates that no single failure involving a Reactor Trip Module will prevent its associated breakers from opening.

Redundancy - Four entirely separate and independent identical reactor protection system channels are provided. Every input variable is measured four times. Removing all the components associated with a single reactor protection system channel would leave all the remaining components and channels operational in a 1-out-of-3 system.

Electrical Independence and Separation - All signals leaving the reactor protection system are isolated from the system either by isolation amplifiers (for Analog signals) or by relay contact (in the case of Digital signals). The effect of this isolation is to prevent faults occurring to signal lines outside of the Reactor Protection System cabinets from being reflected into more than one protection channel. The isolation thus provided also assures that two or more protection channels cannot interact through the cross-coupling of faulting of related signal lines.

Faults such as short, open, or grounded circuits and cross-coupling of external signals from two or more channels have no effect on the protection channels or their functions. The Isolation Amplifier circuits have been tested to assess their effectiveness to isolate the input signal from output circuit faults. They are capable of blocking a direct connection, i.e., a hot short, across their output of 410 V dc (300 V rms) without affecting the input source. The redundancy and coincidence logic of the system permits the system to tolerate failures and this reduces the chance of an inadvertent reactor trip. Each reactor protection system channel is powered from a different vital bus, so that power supply faults can effect only one channel at a time.

Physical Independence and Separation - The need for physical isolation has been met in the physical arrangement of each channel within separate cabinets and wiring within the cabinets separating power and signal wiring so as to reduce the possibility of some physical event impairing system functions. The system sensors are separated from each other. Outside the reactor protective system cabinets, vital signals and wiring are separated and physically protected to preserve channel independence and maintain system redundancy against physical hazards.

Manual Trip - Manual trip can be accomplished from the control console by a trip switch. This trip is independent of the Automatic Trip System and thus not subject to the same failures. Power for the Control Rod Drive Power Breakers' undervoltage Coils comes from the Reactor Trip Modules. The Manual Trip Switches are between the Reactor Trip Module output and the Breaker Undervoltage Coils. Opening the switches opens the lines to the breakers tripping them. There is a separate switch in series with the output of each Reactor Trip Module. All switches are actuated through a mechanical linkage from a single pushbutton.

Testability - The reactor protection system can be tested at all levels both preoperationally and during normal operation without interferring with normal plant operation or trip functions, as discussed in section 4.4.5. The test circuits take advantage of the system redundancy, independence, and coincidence, which make it possible to manually initiate test signals in one protection channel without affecting the other channels.

Loss of Power - The primary source of 120-volt AC power for the Reactor Protection System is the four vital busses. Each channel is powered from a different vital bus. Within the system cabinets, each protection system channel is powered by a separate plus and minus 15-volt d-c channel power supply. All bistables operate in a normally energized state and go to a de-energized state to initiate trip action. Loss of power thus automatically forces the Bistables into the Tripped state. Failure of a vital bus or a Channel Power Supply causes the affected channel to trip.

Equipment Removal - The removal of any module from the vital sections of the reactor protection system initiates the trip normally associated with that portion of the system. For example, removal of a Bistable Module trips the associated Channel Trip Relay, while removal of a Reactor Trip Module trips the associated Control Rod Drive Breaker. In the first case, removing a bistable not only breaks the contact chain leading to the Channel trip Module, but it also breaks

the contact chain leading to the Module Test Interlock Relay, both of which result in a trip of the Channel Trip Relay. In the second case, removing a Reactor Trip Module separates the vital bus from the Control Rod Drive Breaker Trip Coil causing the breaker to Trip. At the same time, a 1-out-of-3 trip input appears in the other three reactor trip modules.

4.5. System Testing

The use of 2-out-of-4 logic between channels permits a channel to be tested on-line without initiating a reactor trip. Maintenance to the extent of removing and replacing any module within a channel may also be accomplished in the on-line state without a Reactor Trip.

To prevent either the on-line testing or maintenance features from creating a means for unintentionally negating protective action, a system of interlocks initiates a Channel Trip when a module is placed in the Test mode or is removed from the system.

A test scheme for the Reactor Protection System is based on the use of comparative measurements between like variables in the four channels, and the substitution of externally introduced Digital and Analog signals as required, together with measurements of actual protective function trip points. A Digital voltmeter is provided for making accurate measurements of trip point and Analog Signal Voltages. The Test circuits allow the operator to test the system channels from the input of any Bistable up to the final actuating device at any time during reactor operation. The Bistable Test consists of inserting an Analog input from one of the channel test modules and varying the input until the Bistable Trip Point is reached. The value of the inserted test signal as monitored by both the system Analog indicator and the test Digital voltmeter represents the true value of the Bistable Trip Point. Thus, the test verifies not only that the Bistable functions but that the trip point is correctly set.

During the test, satisfactory operation of the Bistable can be observed by watching the "trip-status" light in the Reactor Trip Module.

The Reactor Trip Module 2-out-of-4 logic and the associated control rod drive breaker are tested by pressing various combinations of two logic test switches in the Reactor Trip Module to simulate the six combinations of

trips inherent in a 2-out-of-4 coincidence logic. During the test, satisfactory performance of the Trip Logic Relays can be observed by watching the "Trip-logic-relay" lights and the "breaker-trip" lights on the Reactor Trip Module. This test verifies not only all the combinations of 2-out-of-4 logic, but also that the trip logic relays and the Control Rod Drive Breakers will trip.

On line testing may be performed at different intervals and levels within the system consistent with satisfactory system reliability characteristics. The reliability of the system for random failures has been assured by careful selection of components failure-testing of logic elements, environmental testing of the system modules, and long term prototype proof-testing.

The reliability of the system logic, primarily the relays and coincidence networks in the reactor trip modules, has been made very high to eliminate the need for frequent tests of the logic. The logic relays are of two classes: one class designed for high-speed light electrical loads, and more than 10^6 operations under load; the other class for switching electric loads of up to 10 amperes and more than 10^5 operations.

The system test scheme includes frequent visual checks and comparisons within the system on a regular schedule in which all channels are checked at one time, together with less-frequent electrical tests conducted on a rotational plan in which the tests are conducted on different channels at different times.

4.6. Bypassing

4.6.1 Shutdown Bypass - A switch is provided in each protective channel to bypass the following trips: low pressure, pressure/temperature, power/imbalance/flow, and flux/pumps. Operation of the switch above a predetermined low reactor coolant pressure set point trips the channel. If Bypass has been established increasing the pressure above a predetermined high pressure setpoint trips the channel.

The low and high pressure setpoints are the Reset and Trip points of a bistable. Initiation of the bypass requires the following:

1) Pressure must be below set point of the bistable.

2) Bistable must be manually reset.

3) Shutdown bypass switch must be placed in bypass position.

4.6.2 Selectable 2/3 Coincidence - A key switch is provided in each protection channel for changing the system logic from 2/4 to 2/3 coincidence. Operation of the key switch:

1) blocks the trip action of the associated protection channel.

2) renders the remaining key switches ineffective in blocking trip action of their respective protection channel.

Thus, one and only one protection channel may be bypassed at a time.

4.7. Rod Withdrawal Inhibit Function

The two Source Range Channels (NI-1 and NI-2) and the two Intermediate Range Channels (NI-3 and NI-4) monitor the startup rate (SUR) of the reactor. These signals are used to generate a Rod Withdrawal Inhibit signal, is necessary.

When the reactor power level is in the Source and Intermediate ranges the Rod Withdrawal Inhibit logic is in effect. Once the level enters the Power Range this function is bypassed.

The system will generate a Rod Withdrawal Inhibit signal if either of the Source Range Channels shows a high startup rate. Also, when the reactor power level is in the Intermediate Range, a Rod Withdrawal Inhibit signal will be generatre if either of the Intermediate Range channels shows a high startup rate.

When the reactor power level enters the Intermediate range the startup rate Rod Withdrawal Inhibit functions of the Source Ranges are bypassed when both Intermediate Ranges reach a predetermined power level. This may also be bypassed by a modified 2-out-of-4 logic when the power level enters the Power Range.

Each of the Source Range startup rate Rod Withdrawal Inhibit functions are bypassed by two identical (functionally) but are independent logic strings. At the time the function is bypassed the Source Range Detector Power Supplies are also de-energized to prohibit damage to the Proportional Counter Assemblies.

The entire Rod Withdrawal Inhibit function is bypassed by a modified 2-out-of-4 logic determined by the Power Range Channels.

As indicated in the section 2-3 sketch, the entire logic for rod withdrawal is "inverted" through an auxiliary relay such that the final "rod hold" signal is an open contact state. Removal of this auxiliary relay module would simulate a rod hold state.

4.8 Auctioneered Power Function

Refer to figure 3.5. The function of the auctioneered power scheme is to provide an average power signal output to the ICS and allow testing of a power range channel without essentially affecting the output signal to the ICS.

The output of the auctioneer module is an average power signal which equals the greater of its two inputs; either the average of power channels NI-5 and NI-6 or the average of power channels NI-7 and NI-8. The digital logic between the output of the two averager modules and the input to the auctioneer module allows testing of a power range channel and maintaining the integrity of the average power signal to the ICS. The digital logic contacts are from the power range test modules. When a power range test module is placed in any test mode (not in the "Operate" mode), the averager output remains a function of the test mode power level; but the actual input to the auctioneer is placed at ground potential. Consequently the output of the auctioneer is equal to averager input which does not have any one of its power range channels in the test mode.

FIGURE 4.2

PRESSURE TEMPERATURE
TRIP SETPOINT FUNCTIONS

$KT - b \geq P$

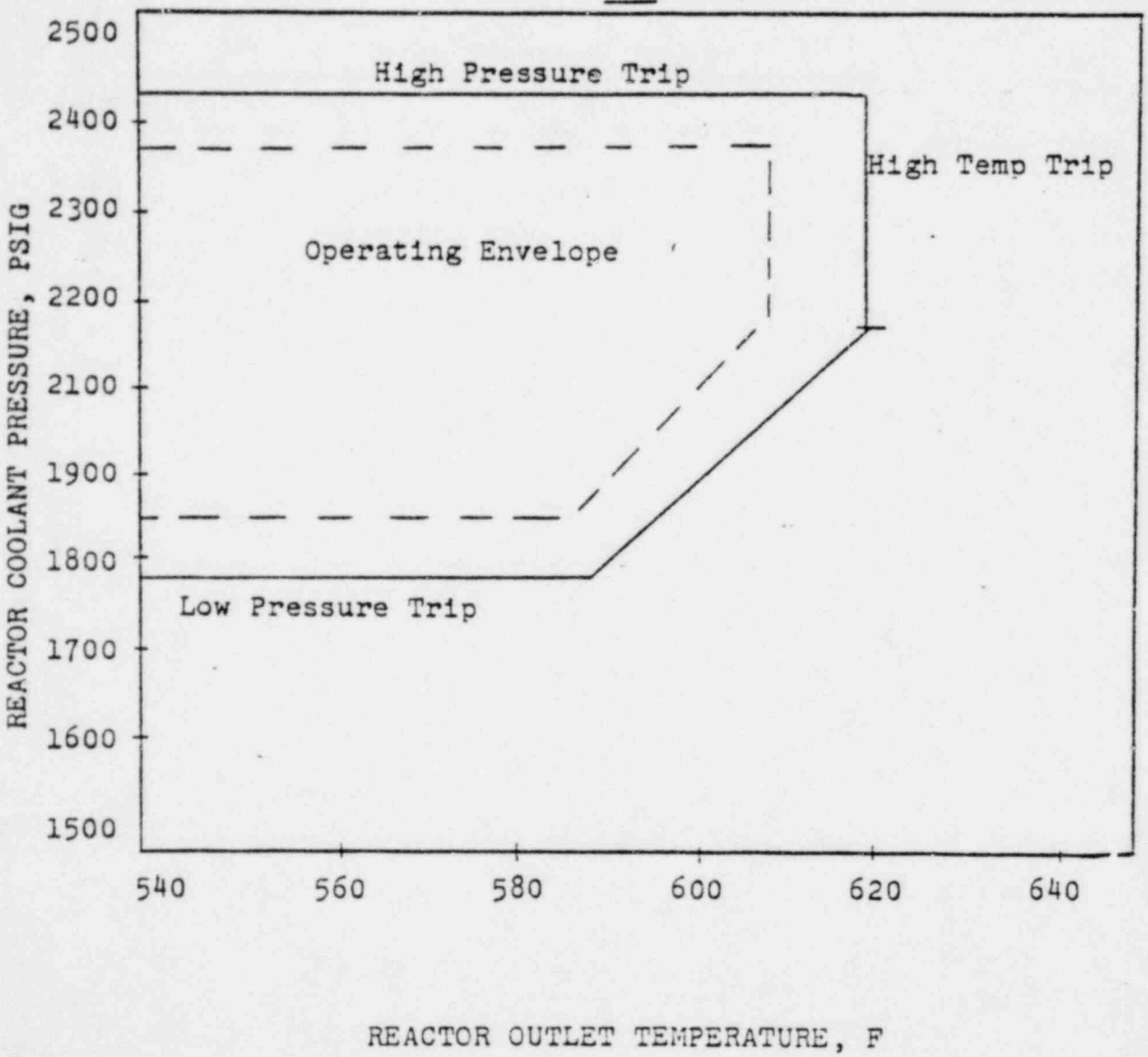

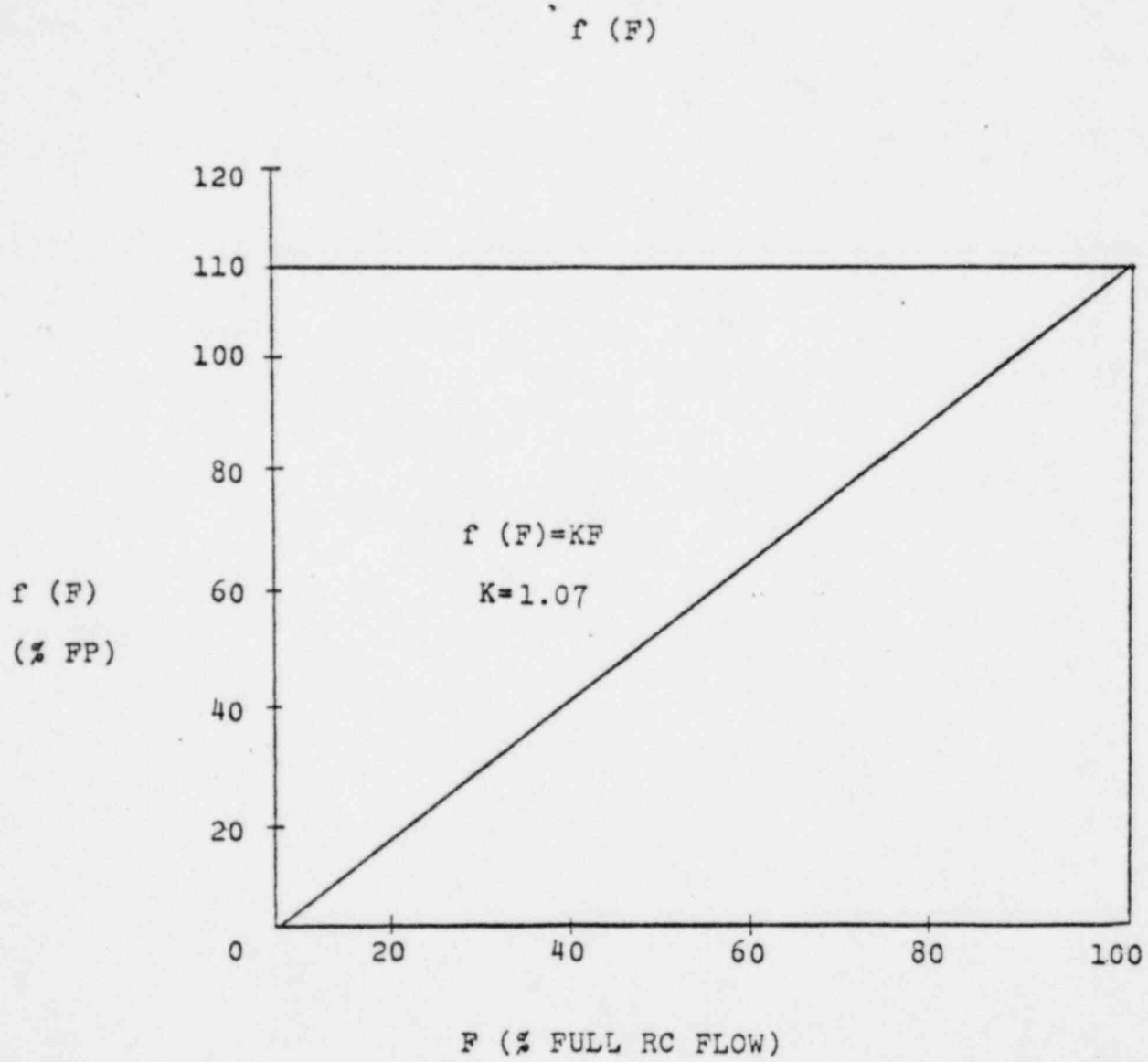
f (F)
120
110
100
80
60
40
20
0
f (F)
(% FP)
f (F)=KF
K=1.07
20
40
60
80
100
F (% FULL RC FLOW)

FIGURE 4.3

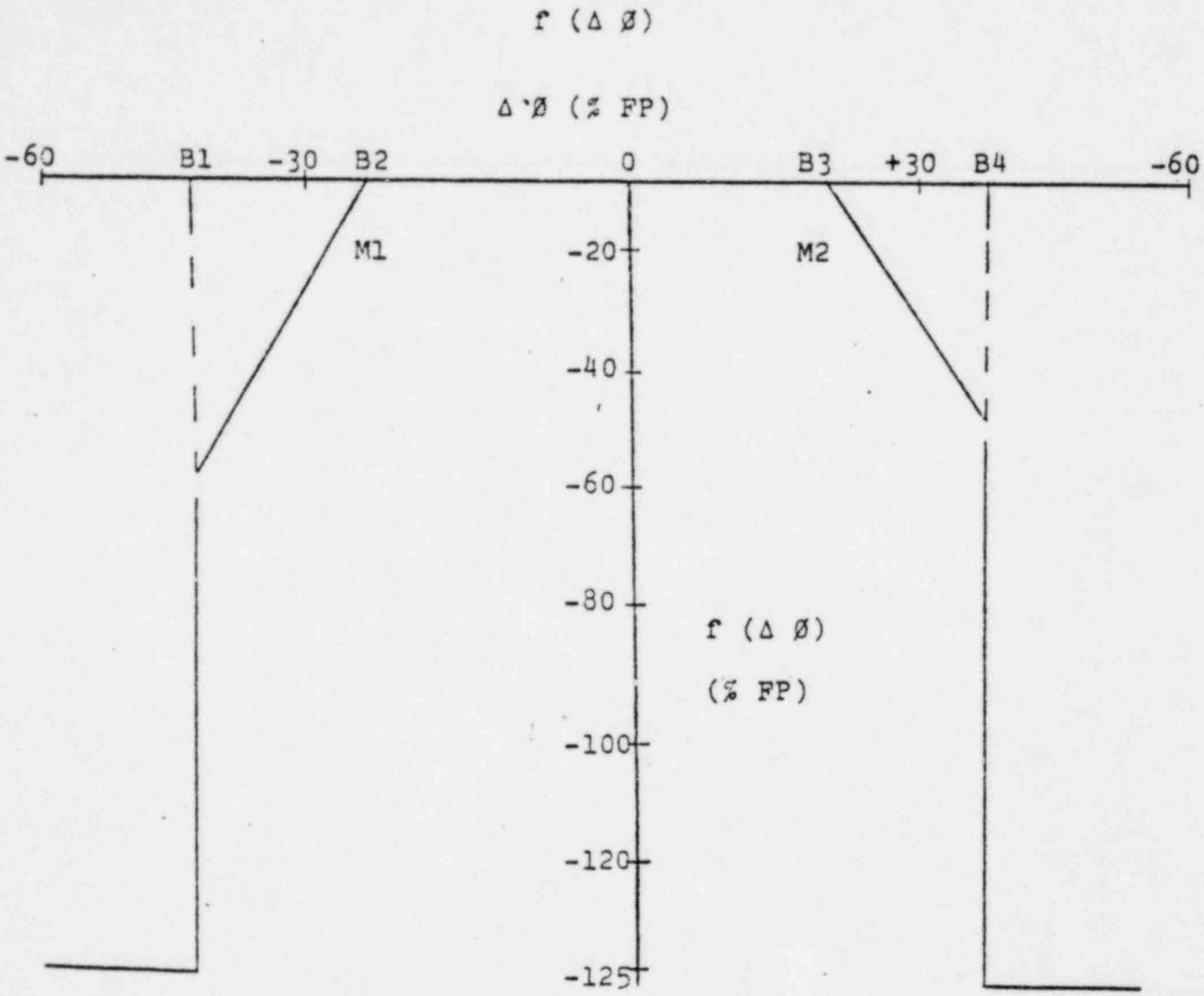
f (Δ Ø)
Δ Ø (% FP)
-60
B1
-30
B2
0
B3
+30
B4
-60
M1
M2
-20
-40
-60
-80
-100
-120
-125
f (Δ Ø)
(% FP)

FIGURE 4.4

Ø / ΔØ/F TRIP SETPOINT

FUNCTION

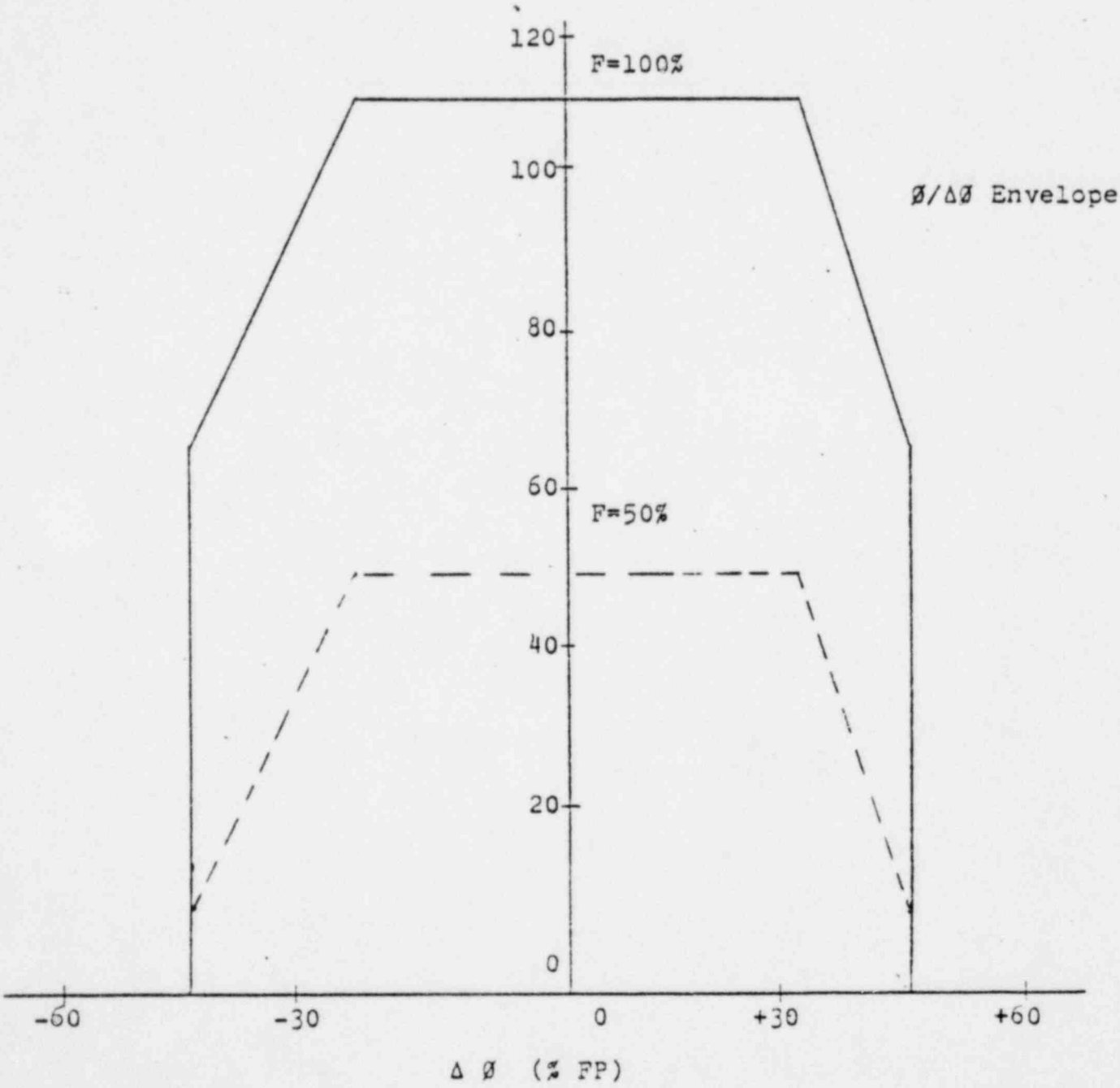

FIGURE 4.4.1

15. NUCLEAR INSTRUMENTATION SYSTEM

NUCLEAR INSTRUMENTATION SYSTEM

1. Introduction

The nuclear instrumentation system monitors the reactor neutron power from source level to 125% full power and supplies signals to the operator, the reactor control portion of the ICS, and the protective system. All system neutron detectors are outside the reactor vessel. The measuring span from source level to 125% full power exceeds 10 decades of neutron flux information, so that three ranges of nuclear instrumentation are required:

Source range instrumentation provides two logarithmic signals of neutron power, each covering the span from below source level to six decades above source level and derived from a proportional counter. The overlap with the intermediate range is over two decades.

Intermediate range instrumentation provides two logarithmic signals of neutron power, each covering the span from seven decades below full power to above full power and derived from a compensated ion chamber. The overlap with the power range is over two decades.

Power range instrumentation provides four linear signals of neutron power, each covering the span from 0 to 125% full power and derived from a detector assembly consisting of two uncompensated ion chambers. In addition, four linear signals of reactor imbalance, each covering a span from -62.5 to +62.5% full power, are provided.

2. System Design Criteria

Because of the essential nature of the neutron flux information derived from the nuclear instrumentation, two major design criteria have been applied to guarantee the reliability and operability of the system:

Redundancy — All nuclear instrumentation system channels shall be redundant with a minimum of four identical independent channels where

inputs to the reactor protective system are provided, and two identical independent channels where no reactor protective system inputs are provided.

Independence — Redundant channels shall be both electrically and physically independent, so that electrical or mechanical faults in one channel cannot affect the redundant channels in any way.

Three important criteria apply to guarantee that the safety of the plant is never compromised by the absence of correct neutron flux information:

1. Availability — At least one range of nuclear instrumentation shall be on scale at all times as long as an operating core is loaded in the reactor.

2. Overlap — An absolute minimum of one decade of overlap shall exist between successive ranges of nuclear instrumentation.

3. Foldover — Each range of nuclear instrumentation shall be designed to withstand overload without foldover.

One additional criterion applies to guarantee plant availability:

Serviceability — The nuclear instrumentation shall be designed so that routine servicing and preventive maintenance can be performed without interfering with normal reactor or plant operation.

3. Functional Description

The nuclear instrumentation is shown in Figure NI-1. The design emphasizes accuracy, stability, and reliability. Instruments are redundant in every range.

The nuclear instrumentation system includes all instruments associated with the measurement of reactor leakage neutron flux with out-of-core neutron detectors and the processing and display of leakage flux measurements as a direct measure of reactor power. Where necessary, the system incorporates provisions to compensate for the presence of gamma radiation which is not directly related to reactor power.

The reactor neutron flux must be measured at all times and at all power levels. The normal span from source level to overpower trip is approximately 10 decades, so that the nuclear instrumentation must

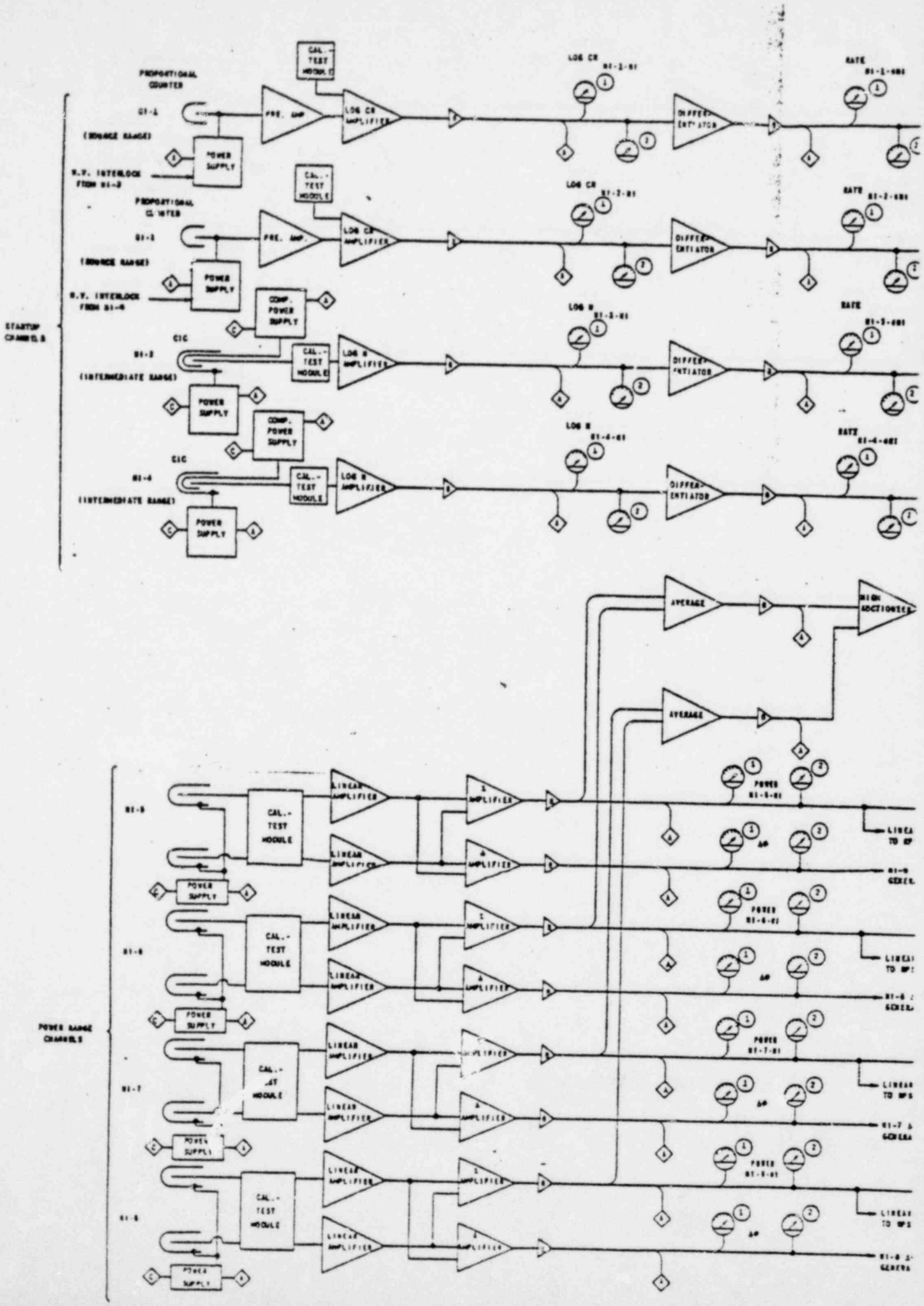
STARTUP CHANNELS
PROPORTIONAL COUNTER
(SOURCE RANGE)
H.V. INTERLOCK FROM
POWER SUPPLY
CAL.-TEST MODULE
PRE. AMP.
LOG CR AMPLIFIER
LOG CR
RATE
DIFFERENTIATOR
CIC
(INTERMEDIATE RANGE)
COMP. POWER SUPPLY
LOG N AMPLIFIER
LOG N
AVERAGE
HIGH SELECTOR
POWER RANGE CHANNELS
LINEAR AMPLIFIER
POWER
LINEAR TO RPS

Figure NI-1. Nuclear Instrumentation Diagram

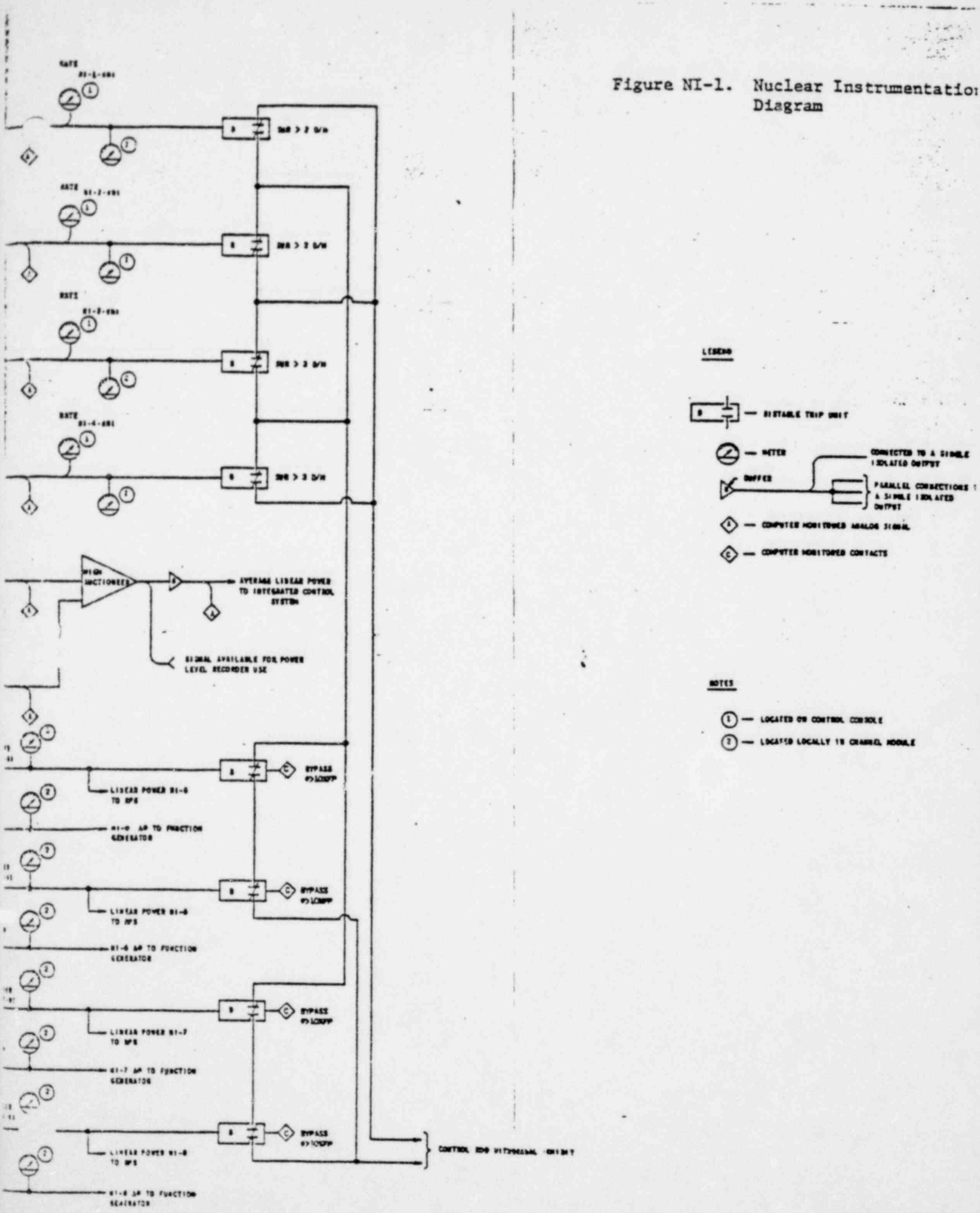

Babcock & Wilcox

Figure NI-2. Nuclear Instrumentation Detector Locations, Plan View

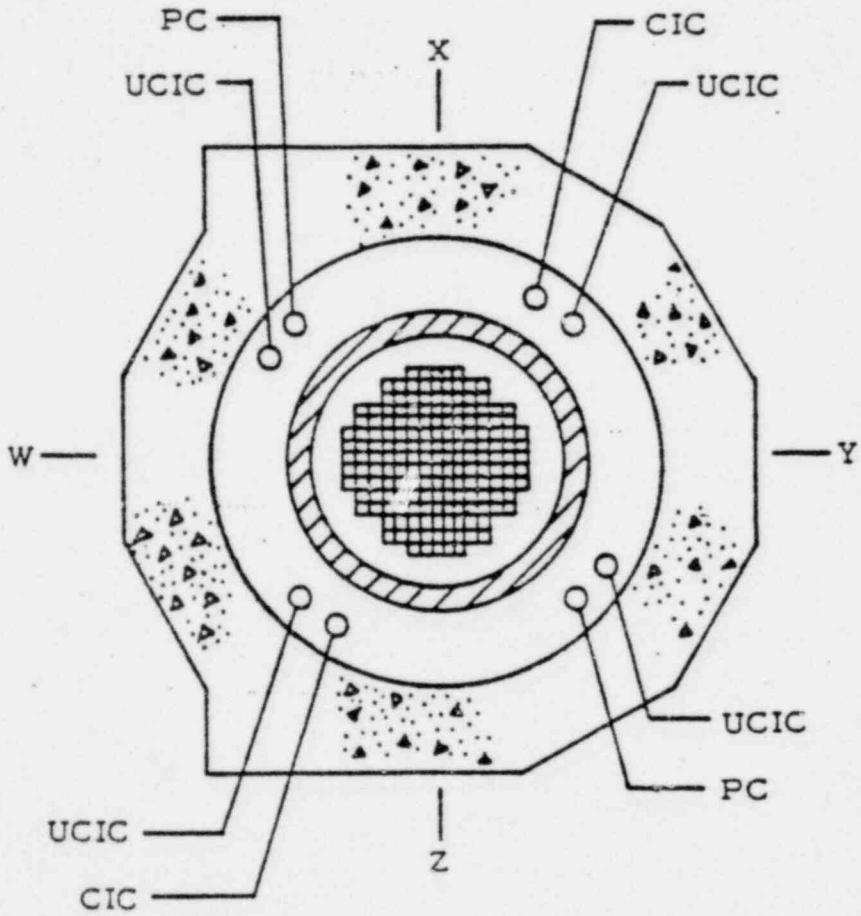

Legend

PC	Proportional Counter — Source Range Detector
CIC	Compensated Ion Chamber — Intermediate Range Detector
UCIC	Uncompensated Ion Chamber — Power Range Detector

provide a minimum of 12 decades, and preferably 13 decades, of neutron flux level information to allow for margins at both ends of the operating scale and for variations in source strength.

The nuclear instrumentation has eight channels of neutron information divided into three ranges of sensitivity: source, intermediate, and power ranges. The three ranges combine to give a continuous measurement of reactor power from below source level to over 125% full power, a full 13 decades of information. A minimum of one decade of overlapping information is provided between successively higher ranges of instrumentation. The relationship between instrument ranges is shown in Figure NI-2.

The source range instrumentation consists of two redundant count rate channels designated NI-1 and NI-2, each providing neutron flux information over a counting range of seven decades from 0.1 to 10^6 counts per second. The neutron sources in the reactor core are sized to provide a source strength of 10 counts per second with the reactor shut down, so that the seven decades of information extend from two decades below source level to five decades above. Decay of the sources, however, will change this as much as a decade or more. The signals originate in two high-sensitivity BR_3 proportional counters on opposite sides of the core. Preamplifiers in the reactor building are used to shape and amplify the low-level pulses from the detectors and to provide impedance matching.

Pulse shaping amplifiers amplify the voltage pulses to a usable level for the discriminators where background and noise pulses are discarded. The log count rate amplifier converts the neutron pulses to a signal suitable for displaying the log count rate level to the operator. Rate-of-change amplifiers calculate the rate of change of the log count rate for display to the operator. The channels measure the rate of change of the neutron level in terms of startup rate from -1 to +10 decades per minute and display the information to the operator on meters scaled from -0.5 to +5.0 decades per minute. No protective functions are associated with the source range. However, one interlock is provided; i.e., a control rod withdraw hold and alarm on high startup rate in either channel.

The intermediate range instrumentation consists of two log-N channels designated NI-3 and NI-4, each providing eight decades of flux level information in terms of log ion chamber current. The signals originate in two identical, electrically gamma-compensated ion chambers on opposite sides

of the core. The ion chamber output range is from 10^{-11} to 10^{-3} ampere.

Logarithmic amplifiers convert the detector output currents to signals suitable for displaying log-N level to the operator. Differentiator amplifiers calculate the rate of change of the log-N signal for display to the operators and for use in the rod withdrawal hold interlocks. A high startup rate in either channel will initiate a control rod withdrawal hold interlock and alarm. The startup rate range is from -1 to +10 decades per minute. The operating console meters are scaled from -0.5 to +5.0 decades per minute. Rate interlock action in both the source range and intermediate range channels is locked out above 10% full power.

The power range instrumentation has four linear level channels originating in four detector assemblies, each of which contains two uncompensated ion chambers. The ion chambers are positioned to represent the top and bottom halves of the core. The individual currents from the chambers are fed to individual linear amplifiers. The sum of the top and bottom is the total reactor power. The difference between the top and bottom neutron signals is the power imbalance of the core. The channel outputs are directly proportional to reactor power and cover the range of 0 to 125% for the total power and -62.5 to +62.5% for the power imbalance. The gain of each channel is adjustable, providing a means for calibrating the output against a reactor heat balance. Auctioneered NI channel outputs also supply power level information to the integrated control system (ICS).

4. System Description

4.1. Equipment Locations

4.1.1. Neutron Detectors

The neutron detectors for all channels are located outside the reactor vessel but inside the primary shielding, as shown in Figures NI-2 and NI-3. All detectors are located so that the center of the sensitive volume is at the core midplane. The power range detectors are in four primary positions, about 90 degrees apart around the reactor core and directly opposite the quadrants. Each detector extends the full height of the core in an unshielded detector thimble.

Figure NI-3. Nuclear Instrumentation Detector Locations, Elevation View

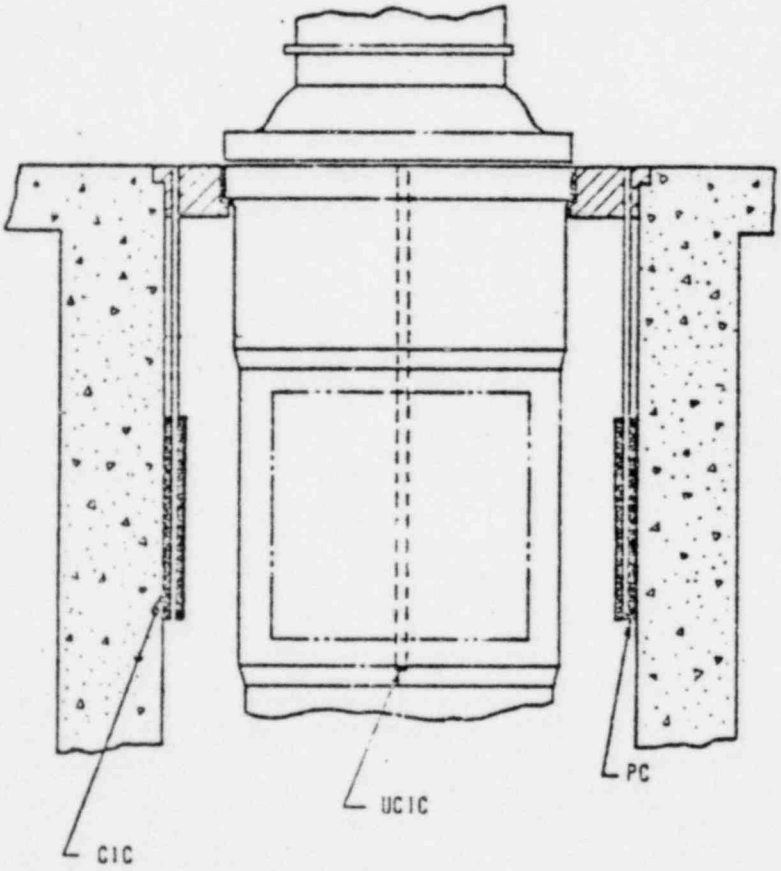

LEGEND

PC - PROPORTIONAL COUNTER-
[illegible] RANGE DETECTOR

CIC - [illegible]SATED ION CHAMBER-
INTERMEDIATE RANGE DETECTOR

UCIC - UNCOMPENSATED ION CHAMBER-
POWER RANGE DETECTOR

Figure NI-4. Typical Console Layout

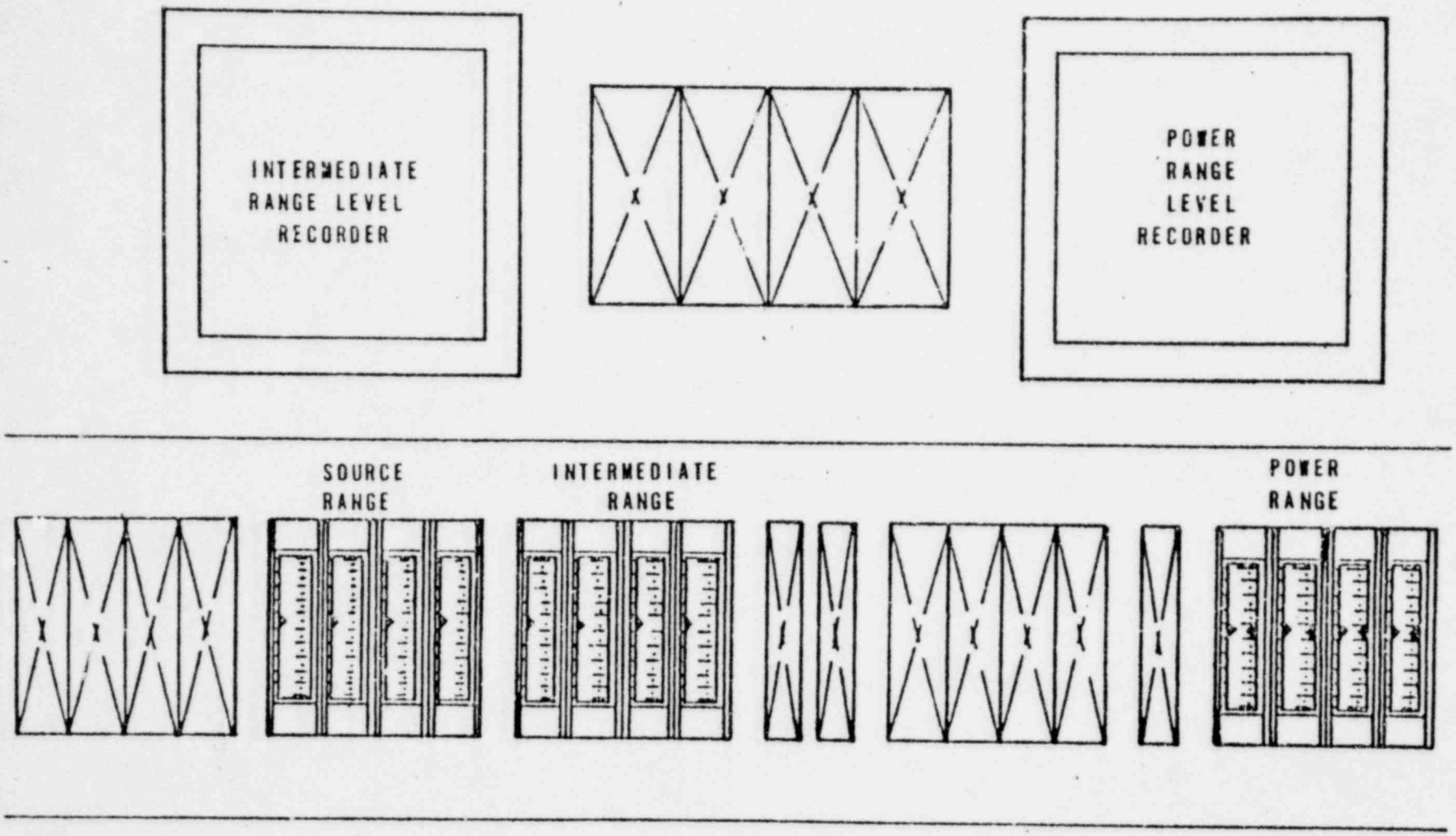

Babcock & Wilcox

The two source range proportional counters are placed on opposite sides of the core. Each detector is surrounded by 2 inches of lead, which provides shielding against gamma radiation. The two intermediate range compensated ion chambers are also installed on opposite sides of the core, but they are located about 90 degrees from the source range detectors. These detectors are surrounded by 4 inches of lead for shielding for protection against gamma radiation.

4.1.2. Preamplifiers

The source range preamplifiers are installed inside the reactor building, as close as possible to the source range detectors, preferably within 100 feet. They are placed outside the primary shield area to keep them out of the high neutron and gamma flux and to make them reasonably accessible for replacement or repair.

4.1.3. System Cabinets

The nuclear instrumentation system amplifiers and test and calibration equipment are housed in the eight cabinets defined as nuclear instrumentation and reactor protective system cabinets. These are located in the control room. Each redundant nuclear instrumentation channel occupies a different system cabinet to provide maximum electrical and mechanical separation, and each channel is powered from a different vital bus.

4.1.4. Operator Readout

Meters and recorders on the console provide the operator with nuclear instrumentation signals. The channel indicators, as shown in Figure NI-4, are arranged in ascending order from left to right. Flux level recorders are located immediately above the indicators. There are no other nuclear instrumentation readouts for the plant on the operator's console or panel. All other readouts for system calibration, etc., are in the system cabinets.

4.2. Source Range Channels

The two source range channels, NI-1 and NI-2 are identical; they are shown functionally in Figure 1. Each channel consists of the following components:

1. BF_3 proportional counter.
2. Preamplifier.
3. Log count rate amplifier.
4. Rate-of-change amplifier.
5. Bistables.
6. Calibration test module.
7. Power supplies.

The components required to implement these functions are described further in section 5 of this chapter.

4.2.1. Source Range Detectors

The source range detectors monitor the subcritical reactor core in its shutdown state. The subcritical neutron leakage is much smaller than that attained during power operation—typical values are above 10^{-1} nv. The source range detectors, therefore, must be very sensitive devices capable of detecting a neutron flux of about 1.25×10^{-2} nv. BF_3 proportional counters are used for this purpose.

4.2.2 Source Range Instruments

The proportional counter output is a pulse for every detected event. The pulse amplitude or pulse height is proportional to the energy of the detected event. Therefore, the output is a series of random pulses of varying magnitude representing both neutron and gamma events. The amplitude of the pulses may be only a few millivolts, a level too low to be directly usable without amplification. The charge-sensitive preamplifier increases these pulses to several hundred millivolts to make them suitable as inputs to the pulse shaping amplifier in the log count rate amplifier. The pulse shaping amplifier amplifies all input pulses by a factor of less than 10 to raise the pulse amplitude to a maximum of 4 volts.

The discriminator in the log count rate amplifier is basically a threshold device which can be set to exclude the passage of pulses of less than some desired magnitude. The discriminator excludes noise and gamma pulses that have lower magnitudes than the neutron pulses.

The output of the log count rate amplifier is a signal which varies directly with the log of the input pulse rate. The log

count rate signal is displayed on an analog meter with a logarithmic scale. The source range channels have a logarithmic scale for two basic reasons: (1) a logarithmic scale provides equal readout accuracy over a wide span of input information, and (2) the reactor power level normally responds to control rod motions logarithmically (exponentially), especially during startup, when this range is in use.

The log count rate signal is next differentiated to measure the rate of change of the flux. The startup rate (SUR) of a reactor is defined as $d(\log_{10}\phi)/dt$ and measured in decades per minute (DPM). The period of a reactor (T) is defined as $1/d(\log_e\phi)/dt$ and measured in seconds. Since the output of the differentiator is directly proportional to SUR and SUR information is more useful to the power reactor operator than period information, the display meters are calibrated in DPM.

The operator is given two indications from the source range channels. One is the log count rate as a measure of the reactor power level, and the other is the startup rate in decades per minute as a measure of the rate of change of reactor power. A startup rate signal from the source range goes to a bistable to halt rod withdrawal when the startup rate exceeds approximately two decades per minute. This holding signal serves to restrain the operator, making it more difficult for him to inadvertently exceed a safe startup rate.

4.3. Intermediate Range Channels

As shown in Figure NI-1, the two intermediate range channels, NI-3 and NI-4, are identical, and each consists of the following components:

1. Compensated ion chamber.
2. Log-N amplifier.
3. Rate-of-change amplifier.
4. Bistables.
5. Calibration test module.
6. Power supplies.

The components are described in detail in section 5 of this chapter.

4.3.1. Intermediate Range Detector

Figure NI-2 shows the relationship between each of the nuclear instrumentation ranges. Notice that the source range and the intermediate range overlap by over two decades. The overlap is determined by the maximum dynamic range of the source range and the lowest usable output of the intermediate range. The intermediate range detectors are capable of measuring a very small neutron flux since their sensitivity is typically 4×10^{-14} ampere/nV; however, technical limitations, such as insulation resistance and the presence of activation gamma, prevent the practical measurement of much less than 10^{-11} ampere.

An ion chamber does not distinguish between ionization events; its output is the sum of two currents—one proportional to the detector neutrons and the other to the strength of the gamma field. An electrically gamma-compensated ionization chamber, therefore, is required in the intermediate range. A compensated ion chamber has two sensitive volumes— one sensitive to neutrons and gammas and the other sensitive to gammas alone. The polarity of the voltage applied to the two volumes is reversed, resulting in an output signal electrically compensated for gamma radiation.

Again, there are limitations. Compensation is not perfect. A conservative approach is to assume that 5% of the gamma signal will always appear in the detector output. The limitations of insulation leakage, instrument stability, and imperfect compensation combine to establish the starting point for the intermediate range of 10^{-11} ampere.

4.3.2. Intermediate Range Instruments

The output of the compensated ion chamber is an analog current from 10^{-11} to 10^{-3} ampere. A logarithmic element in the amplifier converts the detector current to a log signal. The output of the log-N amplifier is proportional to the log of the ion chamber current.

Again, as in the source range, the log of the detector current is proportional to log ϕ, whose time derivative becomes a measure of the rate of change of reactor power or startup rate (SUR). The operator is given two signals from these channels: log ion chamber current and startup rate. One is a measure of reactor power, and the other is the rate of change of power.

Figure NI-5. Nuclear Instrumentation Flux Ranges

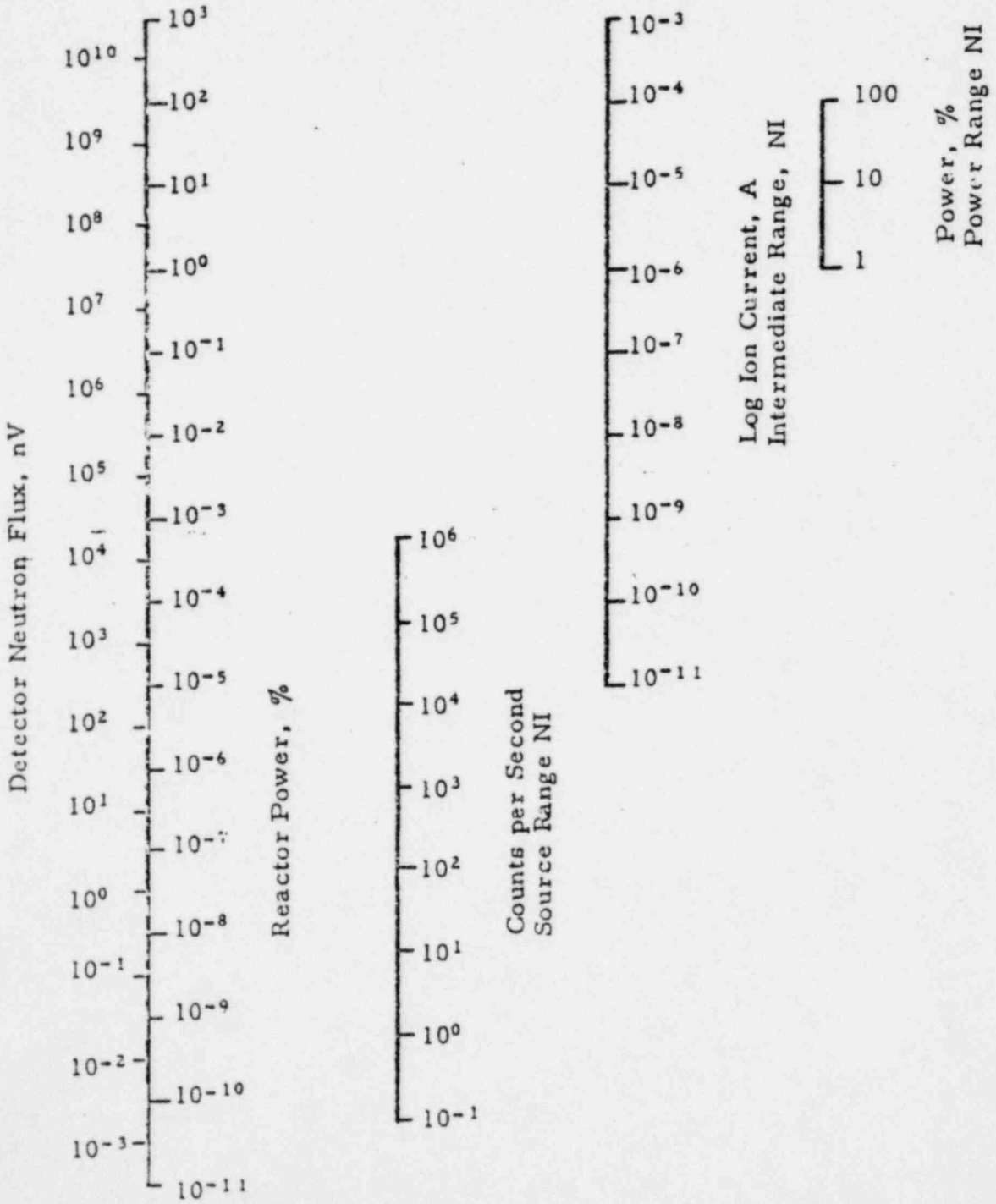

Startup rate information is more stable in the intermediate range because of the statistics associated with an analog detector; i.e., the neutron signal is less subject to sudden statistical variations associated with a proportional counter. A startup rate signal from the intermediate range goes to a bistable to halt rod withdrawal when the startup rate exceeds three decades per minute.

4.4. Power Range Channels

Uncompensated ion chambers are used in the power range channels. Each power range detector consists of two 72-inch sections with a single high-voltage connection and two separate signal connections. The outputs of the two sections are summed and amplified by the linear amplifiers in the associated power range channel. A signal proportional to the difference in % full power between the top and bottom halves of the core is derived from the difference in the currents from the top and bottom sections of the detector. The difference signal is displayed on the control board to permit the operator to maintain proper axial power distribution. The manual test and calibration facilities provide a means for reading the output of the individual sections of the detector. Each detector has a combined sensitive volume extending approximately from the bottom to the top of the reactor core.

Each power range channel comprises the following components:

1. Uncompensated ion chamber.
2. Linear amplifiers.
3. Σ/Δ amplifiers.
4. Calibration test module.
5. Power supplies.
6. Function generator.
7. Averaging amplifier.
8. Auctioneer.

4.4.1. Power Range Detectors

The selection of uncompensated ion chambers as the power range detectors is based on the relative range of neutron flux compared to the gamma field that will be present. Approximately 1% of the detector's full power output is due to the gamma field. Since the

major portion of the gamma field in the reactor power range is "prompt," i.e., directly proportional to reactor power, the gamma response of the detector does not introduce any significant error provided it is held to a small percentage of the total signal.

4.4.2. Power Range Instruments

The dependence of the plant on this equipment from both safety and operational standpoints imposes very strict operational requirements. The power range channels are calibrated against a plant heat balance. Assume that a plant heat balance indicates that the reactor is producing 100% full power and that the power range channels indicate a power level of 98% full power. Adjusting the gain of the linear amplifiers raises the nuclear indication to 100% full power; thus, the channels are calibrated against the heat balance calculation. The accuracy of the indication is theoretically the same as for the heat balance calculation since all nuclear measuring errors at this one point are being compensated by the gain change. Furthermore, the absolute accuracy of the nuclear measurement loses any meaning at the point of calibration to the heat balance.

Far more important than the absolute accuracy of the nuclear measurement are the linearity, repeatability, and degree of drift within the channel. The linearity will determine the error existing in the system at any point removed from the calibration point. The repeatability will determine the error at the point of calibration following a transient away from and back to that point. Collectively, all measurement deviations, aside from drift, are held to less than 1%. The drift of the system is held to a negligible value that is not a factor in determining the frequency of calibration to heat balance.

The outputs from the linear power range channels are displayed to the operator as a direct indication of the reactor power level and power imbalance (Figure NI-4).

5. System and Component Data

This section provides specific data and details about the components in the nuclear instrumentation system.

5.1. System Cabinets and Modules

Figure NI-6 shows a typical nuclear instrumentation system cabinet. The cabinet pictured was assembled for prototype testing of a complete set of nuclear instrumentation channels. The nuclear instrumentation, along with the reactor protective system, is housed in eight of these standard system cabinets made of 1/8-inch-thick steel. The cabinets measure 2 by 2 by 7 feet. They are bolted together to form assemblies with the required number of cabinets.

The equipment is mounted in individual mounting boxes arranged in a vertical row in the cabinet. Up to 10 of these mounting boxes, or terminal panels, each measuring 7 inches high by 17.5 inches wide by 11.5 inches deep, can be mounted in a single cabinet.

All external wiring to the equipment is terminated at terminal panels in the bottom of the cabinets. Individual wires are terminated on barrier-strip terminal blocks. Preformed cables are terminated in Blue Ribbon connectors with latches. Low-level signals carried into the cabinet through shielded coaxial or triaxial cables are connected directly into the equipment modules instead of into terminal panels. High-voltage-wiring to detectors is also connected directly to the equipment module with coaxial cables to minimize the shock hazard potential.

Forced-air cooling is provided in each cabinet. A fan mounted on top of the cabinet forces filtered air horizontally through each of the equipment mounting boxes. Power-dissipating components in the equipment modules are in the direct stream of air flow, allowing efficient cooling. A fan-failure monitor provides a means to annunciate the loss of cooling.

A regulated +15 V supply and a regulated -15 V supply are required for each pair of system cabinets. Supplies are located in the top of the cabinets to minimize the temperature effects in the cabinets. The supplies receive power from the vital or "uninterruptible" 120 V, a-c bus supplying the cabinet they are in.

Standard plug-in modules house the remainder of the instrumentation equipment. The module mounting boxes are divided into 15-unit widths. Two sizes of modules are used in the system: two and three units wide. The equipment inside a module is mounted on a number of

plug-in cards mounted vertically, as shown in Figure NI-6. All switches, adjustments, and indicating devices intended for routine maintenance, test, and calibration are mounted on, or are accessible from, the front panel of the modules. The modules connect to the wiring on the back of the mounting boxes by way of 32 pin connectors. A two-unit-wide module has space for two of these connectors, and a three-unit-wide module has space for three.

5.2. Source Range Channels

Figure NI-7 shows the components required to implement the source range channel (NI-1 and NI-2) functions described in section 4.2. Except for the detectors, preamplifiers, and operator readouts, all components are mounted as modules in the system cabinets.

5.2.1. Proportional Counters

The source range detectors are enriched BF_3 proportional counters. They are designed to detect neutrons of thermal energies in the range from 1.25×10^{-2} to 1.25×10^{4} neutrons/cm^2-second. They are multi-unit, rugged counters designed to operate in any position.

Each detector is a BF_3 proportional counter unit surrounded by a heavy-walled, hermetically sealed aluminum outer case, permitting operation in high-humidity environments. The materials used in these detectors have been selected for low activation properties, thereby facilitating handling after exposure to neutron fluxes. Their thermal neutron sensitivity is approximately 35 counts/neutron-cm^2 at an operating voltage of 2000 V. Table NI-1 summarizes the operating characteristics of the source range detectors.

Each detector is mounted in a housing assembly which serves to electrically insulate the detector case from ground and to provide a convenient and rugged means for handling the detector during installation and removal from the detector thimble. The assembly, consisting of the detector and housing (detector assembly), is supplied as a unit by the manufacturer and includes an integral inorganic-insulated triaxial cable, with connector, cut to the precise length necessary to reach the top of the detector thimble. The outer shield of the cable is connected to the housing, which is insulated from the thimble, and

grounded in the preamplifier, providing an effective shield against electrical noise. Inorganic insulated cable is used to ensure that the cable life is at least as great as the detector life. Quartz-insulated cable is used with proportional counters because of its exceptional pulse transmission characteristics, helping to make up for the losses in the cable run from the detector to the preamplifier. Each assembly is seal welded, evacuated, baked dry, and filled with an inert atmosphere to prevent entry of moisture.

5.2.2. Preamplifier Module

The source range preamplifier is the only nuclear instrumentation module mounted outside the system cabinets. The preamplifier is packaged in a double-box arrangement to minimize difficulties from continued operation in a high-humidity environment. The inner box contains the electronics and is insulated from the outer box. The power supply and signal connectors are mounted on the outer box. Because of the low signal levels, triaxial cable is used for the signal lines.

The preamplifier is of the type known as charge sensitive; that is, its output voltage is proportional to the amount of charge appearing at its input. This approach provides compatibility with the output of the proportional counters, which transmit an impulse of charge for each radiation event. Table 1 summarizes the operating characteristics of the preamplifier.

Table NI-1. Preamplifier Module Design Data

Input	0.1 to 10^5 randomly distributed pulses per second with 0.5 to 10 picocoulombs average charge
Input impendance	50 to 100 ohms to match input cable
Output	100 mV to 4 V average pulse amplitude, same polarity as input
Paired pulse resolution	150 ns minimum
Input cable length	100 ft maximum
Output cable length	500 ft maximum

5.2.3. Detector Power Supply Module

As noted in Table NI-2, the source range proportional counters operate at 2000 volts and, consequently, they require a source of well-regulated 2000-V, d-c power. This comes from the detector power supply modules provided in each source range channel and mounted in each source range channel cabinet. Each detector power supply module is connected to its preamplifier by shielded cables. The supplies have stability and regulation within 1% and less than 100 mV output ripple.

In addition to its basic function, each detector power supply has local and remote high-voltage turnoff, overvoltage cut-off, current limiting, and outputs for remote indication of voltage and annunciation of voltage ON-OFF.

The detector power supply is a regulated d-c to d-c converter operating from the cabinet plus and minus 15 V, d-c buses. An oscillator and power amplifier provide a sinusoidal input to a voltage step-up transformer. The high voltage a-c output of the transformer is rectified and further stepped up in a voltage tripler. A fraction of the d-c output is compared with a reference voltage in a comparator amplifier which controls the oscillator output amplitude to maintain the operating voltage.

Table NI-2. Proportional Counter Design Data
(Type WL-23682)

Mechanical	
OD, in.	3.00
Length, in.	32.0
Sensitive length, in.	26.0
Electrode diameter, in.	0.001
Net weight, lb	10.0
Shipping weight, lb	30.0
Materials	
Body	Aluminum
Electrode	Tungsten
Electrode insulation	Aluminum oxide
Sensitive material	BF_3
Gas pressure, cm Hg	55

Table NI-2. (Cont'd)

Impedance	
Minimum resistance, ohms	10^{11}
Approximate capacitance, pF	70
Maximum Ratings	
Voltage between electrodes, V	2500
Operating temperature, F	250
External pressure, psi	180
Thermal neutron flux, nv	
Operating	$1.25 \quad 10^{4}$
Nonoperating	1×10^{10}
Nonoperating gamma flux, R/h	1×10^{5}
Typical Operation	
Voltage, V	2000
Thermal neutron flux range (conventional circuitry)	
Lower limit, nv	2.85×10^{-2}
Upper limit, nv	2.85×10^{3}
Thermal neutron flux range (special circuitry)	
Lower limit, nv	1.25×10^{-2}
Upper limit, nv	1.25×10^{4}
Sensitivity, cps/nv	35
Minimum plateau length, V	200
Maximum plateau slope, %/V	4.0
Output pulse	
Approximate unloaded amplitude, mV	50
Average inherent rise time, s	10^{-7}
Inherent background, cps	0.20

As shown in Figure NI-8, the detector power supply is packaged in a 3-unit-wide module. The module front plate contains a meter to indicate output voltage, a voltage adjustment potentiometer, an ON-OFF switch, a limit reset pushbutton, and a test jack for measuring the output voltage divided by 1000. Table NI-3 summarizes the operating characteristics of the detector power supply module.

5.2.4. Count Rate Amplifier Module

The count rate amplifier provides a d-c output in the range of 0 to 10 volts, proportional to the logarithm of the input pulse rate in the range of 0.1 to 10^6 pulses per second. The amplifier consists of four basic sections: a pulse amplifier, pulse height discriminator, log count rate circuit, and output isolation buffer amplifiers.

The input pulses, with typical amplitudes of a fraction of a volt, are applied to the pulse amplifier, which has an input impedance to match the input coaxial cable. The gain of the pulse amplifier is continuously adjustable from 4 to 10. Sufficient resolving time (100 nanoseconds) has been designed into the pulse amplifier circuitry to ensure that no significant count loss occurs in the amplification stage. The output of the pulse amplifier is applied to the discriminator, which is a high-gain amplifier with an adjustable threshold. The threshold can be set to reject gamma and noise pulses of smaller magnitude than the (neutron) signal pulses, thus discriminating between signal, gamma, and noise. Standardized magnitude signal output pulses from the discriminator drive a binary flip-flop. The flip-flop output provides complementary inputs to the log count rate circuit by way of power amplifiers. The log count rate circuit comprises five classic diode pump circuits (commonly called a Cooke-Yarborough circuit) whose outputs are summed in an operational amplifier. This combination produces a d-c voltage output proportional to the logarithm of the average input pulse repetition rate. Standard buffer amplifiers at the output furnish isolation between the various output signal paths.

Table NI-3. Detector Power Supply Module Design Data

Supply voltage, V dc	1200-2400
Maximum output ripple, mV	100
Output setting resolution, %	0.05
Test jack output accuracy, % of output voltage ÷ 1000	0.1
Load regulation, mA	
2%	0 - 5
1%	0 - 4
0.1%	0 - 1

As shown in Figure NI-9, the count rate amplifier is packaged in a standard three-unit-wide module with plug-in cards for

component mounting. A meter calibrated in counts per second is mounted on the front of the module, along with adjustments for pulse amplifier gain, discriminator threshold level, and output zero and range. Test jacks are provided for signals used during on-line testing. Table NI-4 summarizes the operating characteristics of the count rate amplifier module.

Table NI-4. Count Rate Amplifier Module Design Data

Input	0.1 to 10^6 pulses per second, randomly distributed; 40 mV to 2 V average amplitude.
Output	0 to 10 V d-c corresponding to the logarithm of the average pulse repetition rate in the range from 0.1 to 10^6 pulses per second.
Response time	Variable — from 400 seconds at 0.1 pulses per second to 1 second at 10^6 pulses per second.
Accuracy	1% of full scale at reference conditions, 2% of full scale over design range.
Pulse resolution	10^7 (less than 100 ns rise time) pulses per second.
Linearity (independent)	Output voltage versus log count rate; 1% of full scale.
Repeatability	0.1% of full scale.
Discriminator level accuracy	1%.

5.2.5. Rate-of-Change Amplifier Module

During reactor startup, the rate of increase of neutron flux is an important parameter for operator monitoring. The rate-of-change amplifier receives a 0- to 10-volt input from the count rate amplifier which is proportional to the logarithm of the neutron flux level. Since changes in neutron flux during startup tend to be exponential, the input to the rate-of-change amplifier tends to be a linear

ramp when neutron flux is changing. The rate-of-change amplifier output is 0 to 10 volts, corresponding to a rate of change of minus 1 to plus 10 decades per minute. Since differentiator amplifiers tend to be extremely sensitive to high frequencies, a low-pass filter is incorporated in the circuitry.

As shown in Figure NI-10, the rate-of-change amplifier is packaged in a standard 3-unit-wide module. On the front plate are a meter calibrated in decades per minute, zero and range adjustment potentiometers, and an output test jack used for on-line testing and calibration. Table NI-5 summarizes the important operating characteristics of the rate-of-change amplifier.

Table NI-5. Rate-of-Change Amplifier Design Data

Input range	0 to 10 V corresponding to the logarithm of 0.1 to 10^6 counts per second.
Output voltage	0 to 10 V corresponding to -1 to +10 decades per minute.
Input impendance	Approaches infinity at dc; approaches 143 K at high frequency.
Output impedance	Less than 1 ohm.
Response time	Less than 10 seconds, 0 to 99% of value.
Accuracy at reference conditions	0.1%.
Accuracy over design range.	2%.

5.2.6. Bistable Module

Bistables are used to convert analog input signals to digital output signals in the form of relay contacts whenever a setpoint value is reached. The bistable module compares two analog inputs in the range of 0 to 10 V dc, one from an external signal source and the other from either an external source or an internal variable trip point power

ble deadbar
ning action at ti
in the input signal.
relay contact, allows the trip
A memory circuit, which must be rese
dicate whether or not the module has been t
As shown in Figure NI-11, the bi
in a standard 2-unit-wide module. On the front plat
dicate the trip state of the bistable and also the sta
memory. There are two momentary toggle switches for re
and also the memory. Two potentiometers with turn-counti
used for adjusting the setpoint of the bistable and the dea
jacks are provided for measuring the input voltage, the setpo
and the deadband voltage. Table NI-6 summarizes the operating
istics of the bistable module.

Table NI-6. Bistable Module Design Data

Input signal range	0 to 10 V dc.
Trip accuracy at reference conditions.	0.17% of range maximum; 0.08% typical.
Trip accuracy over design conditions.	0.30% of range maximum; 0.15% typical.
Repeatability	0.005% of range maximum.
Response time	100 ms maximum; 50 ms typical.
Internal setpoint	Adjustable—0 to 100% of range.
Deadband	Adjustable—1 to 101% of range.
Resolution of setpoint and deadband	0.05% of range maximum.

5.2.7. Source Range Test Module

This module generates simulated input signals for on-line testing of the count rate amplifier, rate-of-change amplifier, and the bistables, which form the source range channel of neutron flux monitoring equipment. The SR test module can be used for on-line testing during normal reactor power operation or during reactor shutdown, but not during reactor startup when the channel is active. The test signals applied successively to the count rate amplifier are pulses (whose amplitude may be adjusted) with selected repetition rates of 100 kHz, 4kHz, and 1 Hz. The use of signals at three points of the range also checks the logarithmic conformity. The next test condition is the injection of a variable d-c voltage near the CR amplifier output to check the setpoints and the correct f citoning of the bistables connected to the CR amplifier output.

The test signals applied to the rate-of-change amplifier are a zero input for checking amplifier zero and a 0.025 Hz sawtooth wave with a slope of 10 decades per minute for checking amplifier range. In addition, a variable d-c voltage is fed by way of the rate-of-change amplifier to bistables connected to its output for checking bistable setpoints and functional operation.

As shown in Figure NI-12, the SR test circuit is packaged in a standard three-unit-wide module. On the front plate are an "on test" indicator light, a multiposition rotary test switch, a calibration output potentiometer for the variable d-c voltage, a pulse amplitude potentiometer for the pulse rate signals, a reset switch for control of the sawtooth generator, and test jacks for the ramp (sawtooth) output and its sync pulse and for the +10 V reference and the pulse amplitude output.

5.3. Intermediate Range Channels

Figure NI-13 shows the components required to implement the intermediate range channel NI-3 and NI-4 functions described in section 4.3 of this chapter. Except for the detectors and operator readouts, all components are mounted as modules in system cabinets.

Figure NI-13. Diagram of Intermediate Range Channel

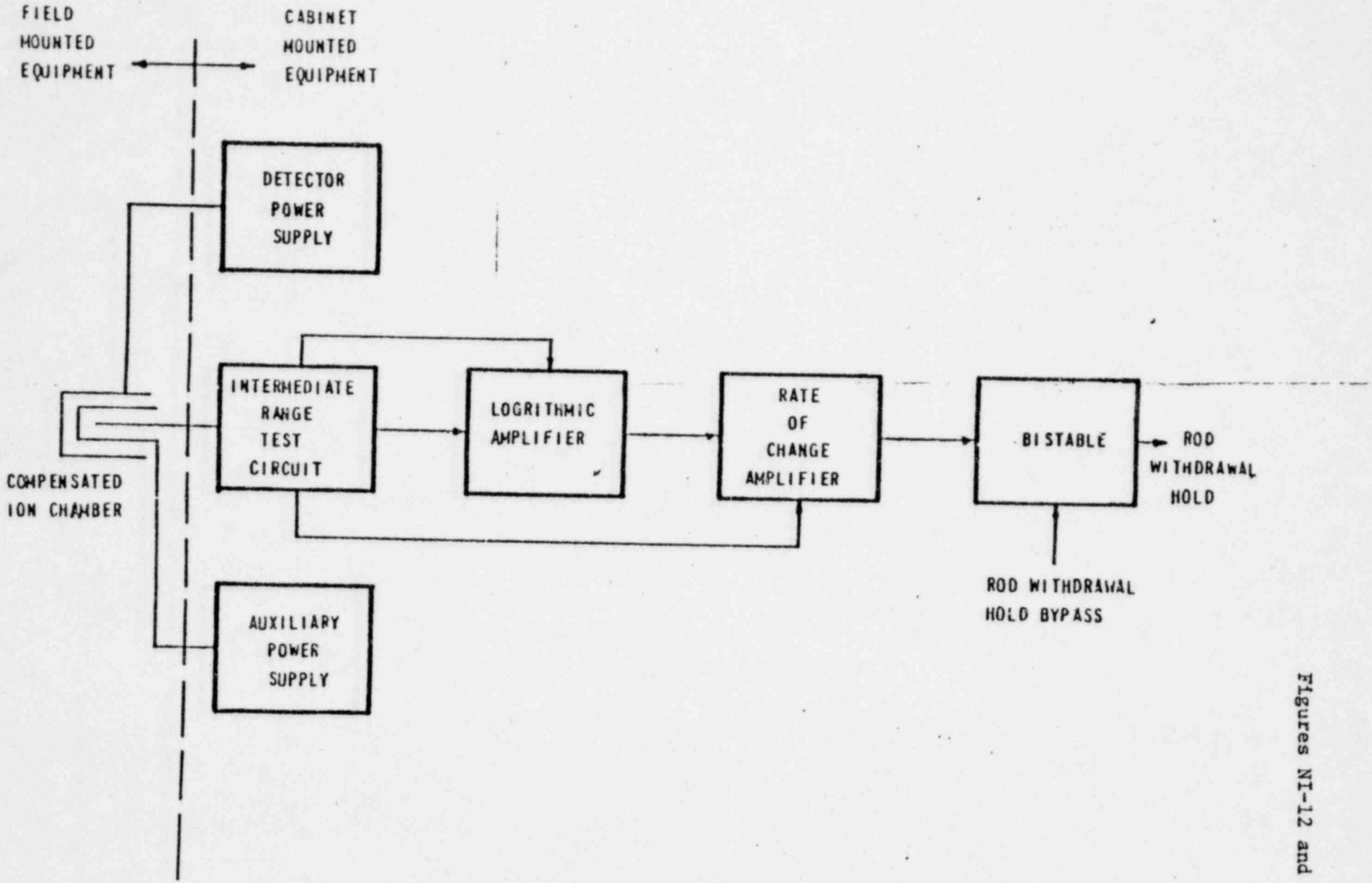

5.3.1. Compensated Ion Chambers

The WL-23635 compensated ionization chamber detects thermal neutrons in the range from 2.5×10^2 to 2.5×10^{10} neutrons/cm^2-second in the presence of very high gamma radiation fields. The detector is rugged in construction and may be operated in any position at temperatures up to 250°F.

The detector incorporates both guard-ring construction (to minimize insulator leakage) and continuously variable electrical compensation. The neutron sensitivity of the chamber is approximately 4.0×10^{-14} amperes/neutron/cm^2-second. Gamma sensitivity is less than 2.3×10^{-11} amperes/R-h when operated uncompensated, but is reduced to approximately 2.3×10^{-13} amperes/R-h in compensated operation, thus extending the usual operating range by two decades. The detector is constructed of high-purity materials to reduce the effect of induced radioactivity. The case material is 1100 aluminum, and the electrode is an alloy of 3% aluminum-97% magnesium. The insulation is high-purity alumina.

Each compensated ion chamber is mounted in a housing assembly which serves to electrically insulate the detector case from ground and provide a convenient and rugged means for handling the detector during installation and removal from its thimble. The assembly, consisting of the detector and housing (detector assembly), is supplied as a unit by the manufacturer and includes integral inorganic-insulated triaxial cables, with connectors, cut to the precise lengths necessary to reach the top of the detector thimble. The outer shield of each cable is connected to the housing, which is insulated from the thimble, and grounded in the equipment cabinet to provide shielding from electrical noise. Inorganic-insulated cable is used to ensure that the cable life is at least as long as the detector life. Each assembly is seal welded, evacuated, baked dry, and filled with an inert atmosphere to prevent the entry of moisture.

5.3.2. Detector Power Supply Module

The compensated ion chambers in the intermediate range will be operated at 600 V dc. The detector power supply modules for the compensated ion chamber will be nearly identical to those in the source range described in section 5.2, but the voltage range will be 300 to

800 V dc. However, these modules will be mounted in intermediate range cabinets and connected directly to the high-voltage connections on the detectors rather than to the preamplifiers.

5.3.3. Auxiliary Power Supply Module

The auxiliary power supply provides the necessary negative voltage to the compensating electrode in the compensated ion chamber. A range of regulated voltage from -15 to -300 V dc is available. As indicated in Table NI-7, the normal range of compensating voltage required is -10 to -80 V dc. Typical voltage and current requirements for compensation are -50 V dc and 10 nA.

The basic regulator and auxiliary circuits of the auxiliary power supply module are identical to those of the detector power supply module described in section 5.2, except that no voltage tripler is required. As shown in Figure NI-14, the auxiliary power supply is packaged in a 3-unit-wide module. The front plate of the module has a meter to indicate voltage, a voltage adjustment potentiometer, an ON-OFF switch, a limit reset pushbutton, and a test jack for measuring the output voltage divided by 100. Table NI-8 summarizes the operating characteristics of the auxiliary power supply module.

5.3.4. Logarithmic Amplifier Module

This module provides an output signal range of 0 to 10 V dc, proportional to the logarithm of the input signal current range of 10^{-11} to 10^{-3} amperes dc. The resultant output slope is 1.25 volts per decade of input current. The logarithmic amplifier comprises three sections: a logarithmic circuit, a temperature compensation circuit, and output isolation buffer amplifiers. The logarithmic circuit uses an operational amplifier with a transistor feedback element. The feedback transistor follows very closely the theoretical exponential relationship of collector current to base-emitter voltage over the required eight decades. The result of using the transistor as a feedback element in the operational amplifier is a logarithmic conversion of input current to output voltage. A second operational amplifier with transistor feedback and a reference current input is used for temperature compensation. Standard buffer amplifiers at the output furnish isolation between the various output signal paths.

Table NI-7. Compensated Ion Chamber Design Data
(Type WL-23635)

Mechanical	
Diameter, in.	3-1/8 ± 1/16
Overall length, in.	19-1/8 ± 3/16
Approximate sensitive length, in.	14
Net weight, lb	5-3/4
Shipping weight, lb	19
Materials	
Outer case	1100 aluminum
Electrodes	3% Al, 97% Mg
Insulation	Alumina
Neutron-sensitive material	
Content	Boron enriched in ^{10}B
Thickness, mg/cm^2	1
Gas fill	Nitrogen
Impedance	
Resistance (minimum), ohms	
Signal electrode to case	10^{13}
High-voltage electrode to case	10^{12}
Compensating electrode to case	10^{12}
Capacitance (approximate), pF	
Signal electrode to case	290
High-voltage electrode to case	330
Compensating electrode to case	143
Maximum Ratings	
Voltage between electrodes, V	1500
Temperature, F	250
External pressure, psi	180
Thermal neutron flux, nv	5×10^{11}
Neutron exposure (before -10% decrease in sensitivity)	10^{19}
Typical Operation	
Operating voltage, V	300 to 1000
Compensating voltage, V	-10 to -80
Thermal neutron flux range, nv	2.5×10^2 to 2.5×10^{10}
Thermal neutron sensitivity, amperes/nv	4.0×10^{-14}
Gamma sensitivity, amperes/R-h	
Total compensated	0
Uncompensated	2.3×10^{-11}
Background current, amperes	$<10^{-11}$

Table NI-8. Auxiliary Power Supply Module Design Data

Supply voltage	-15 to -30C V dc, 0 to 15 mA continuous maximum.
Output ripple	100 mV maximum.
Resolution of output setting	0.05%
Test jack output accuracy	0.1% of output voltage ÷ 100.
Load regulation	2% - 0 to 15 mA, -125 V only; 1% - 0 to 10 mA, -100 to -300 V, 0 to 6 mA, -50 to -100 V, 0 to 3 mA, -30 to -50 V, 0 to 1 mA, -15 to -30 V.

Table NI-9. Logarithmic Amplifier Module Design Data

Input	10^{-11} to 10^{-3} amperes.
Output	0 to 10 V dc, corresponding to the logarithm of the input current.
Response time	Variable - 10 seconds at 10^{-11} amperes to 0.1 second at 10^{-3} amperes.
Accuracy	1% of full scale at reference conditions, 2% of full scale over the design range.
Linearity (independent)	Output voltage versus logarithmic input current, 1% of full scale.
Repeatability	0.1% of full scale.

As shown in Figure NI-15, the logarithmic amplifier is packaged in a standard three-unit-wide module. On the front plate of the module is a meter calibrated in terms of the input current, along with adjustments for amplifier balance and calibration. Test jacks are provided for signals used during on-line testing. Table NI-9 summarizes the operating characteristics of the logarithmic amplifier module.

5.3.5. Rate-of-Change Amplifier Module

In each of the intermediate range channels, this module is identical to the rate-of-change amplifier in each of the source range channels described in section 5.2 and Table NI-5 (illustrated in Figure NI-10). In the intermediate range, however, each rate-of-change

amplifier receives from the logarithmic amplifier a 0- to 10-volt input signal which is proportional to the logarithm of the neutron flux level. The rate-of-change amplifier output is 0 to 10 volts, corresponding to a rate of change of -1 to +10 decades per minute.

5.3.6. Bistable Module

The bistable modules in the intermediate range channels are identical to those described for the source range channels in section 5.2 and Table NI-6 (shown in Figure NI-11). In the intermediate range channels, they will function to initiate a rod withdrawal hold on a rate of change of 3 decades per minute. Although not shown in Figure NI-1 or Figure NI-13, there is a bistable at the output of each logarithmic amplifier to cut off the source range detector power supply automatically at 10^{-9} amperes to prevent exceeding the maximum operating flux limits on the proportional counter detectors.

5.3.7. Intermediate Range Test Module

The intermediate range test module generates simulated input signals for on-line testing of the logarithmic amplifier, rate-of-change amplifier, and bistables which make up the intermediate range of neutron flux monitoring equipment. The intermediate range test module can be used for on-line testing during normal reactor power operation or reactor shutdown, but not during reactor startup when the channel is in use. A stable voltage source and precision resistors generate simulated current input signals of 10^{-3}, 10^{-6}, and 10^{-11} amperes to the logarithmic amplifier. The use of signals at three points of the range also checks the logarithmic conformity. An amplifier balance test position is also provided. The module also has facilities to inject a variable d-c voltage near the logarithmic amplifier output to check the setpoints and the correct functioning of bistables connected to the logarithmic amplifier output.

The test signals available to the rate-of-change amplifier are a zero rate input for checking amplifier zero and a 0.025 Hz sawtooth wave with a slope of 10 decades per minute for checking amplifier range. In addition, a variable d-c voltage can be inserted at the rate-of-change amplifier output to check bistable setpoints and functional operation.

As shown in Figure NI-16, the intermediate range circuit is packaged in a standard three-unit-wide module. On the front plate are an "on test" indicator light, a multiposition rotary test switch, a calibration output potentiometer for the variable d-c voltage, a reset switch for control of the sawtooth generator, and test jacks for the ramp (sawtooth) output and its sync pulse and for +10 volt reference.

5.4. Power Range Channels

Figure NI-17 shows the components needed to implement power range channel NI-5, -6, -7, and -8 functions described in section 4.4. Except for the detectors and operator readouts, all the components are mounted as modules in system cabinets.

5.4.1. Uncompensated Ion Chambers

The WL-23636 uncompensated ionization chamber detects thermal neutrons at flux levels from 1×10^6 to 2.5×10^{10} neutrons/cm^2-second. It is designed to integrate the flux profile of the reactor core so that variations in the chamber signal, cuased by the flux profile shifts that occur in reactor operation, are reduced. The detector consists of two 72-inch-long, neutron-sensitive sections, each uncompensated. It is constructed of materials of low-activation cross section to reduce the amount of artificial radioactivity produced in the device. The case and the electrodes are 1100 aluminum, and the insulation is alumina ceramic. The thermal neutron sensitivity of each section of the detector is approximately 3.75×10^{-13} amperes/neutron/cm^2-second. The uncompensated gamma sensitivity of each section is approximately 1×10^{-10} amperes/R-h. Table NI-10 summarizes the operating characteristics of the power range detectors.

Each uncompensated ion chamber is mounted in a housing assembly which electrically insulates the detector case from ground and provides a convenient and rugged means for handling the detector during installation and removal from its thimble. Except for the housing length and the number of detector cables and seal closures, the housing assembly for the power range detector is identical to that for the intermediate range detector.

Figure NI-17. Diagram of Power Range Channel

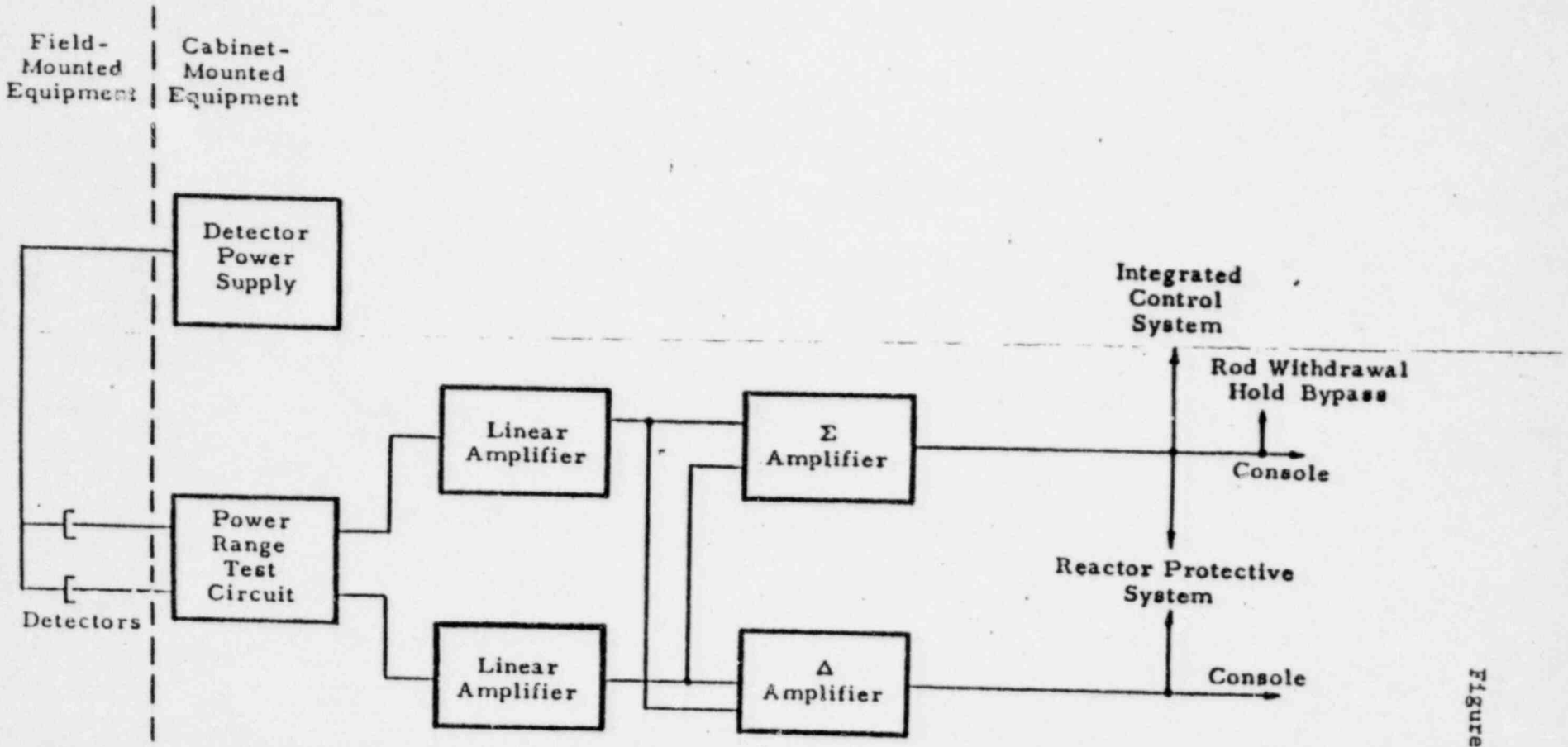

5.4.2. Detector Power Supply Module

The uncompensated ion chambers in the power range will be operated at 600 V dc. As a result, the detector power supply modules for the uncompensated ion chamber will be identical to those in the intermediate range as described in section 5.3.2. One power range detector power supply module in each system cabinet is directly connected by triaxial cable to the high-voltage connection on the detector.

5.4.3. Linear Amplifier Module

The linear amplifier provides a 0- to 11.5-V dc output signal proportional to reactor power from 0 to 71.875% as determined by current signals from the power range uncompensated ion chambers. The amplifier accepts current inputs with a full-scale range of 10^{-5} to 10^{-2} amperes. The linear amplifier consists of two basic sections: a precision linear current-to-voltage converter and output isolation buffer amplifiers. Prime considerations in its design were high accuracy, typically 0.05%, and rapid response, both required for reactor protection. Standard buffer amplifiers at the output guarantee isolation between the various outputs going to protection, control, indication, and recording.

Table NI-10. Uncompensated Ion Chamber Design Data (Type WL-23636)

Mechanical	
Diameter, in.	3-1/8 ± 1/32
Overall length (maximum), in.	154
Approximate sensitive length (each section), in.	72
Net weight, lb	40
Shipping weight, lb	50
Materials	
Outer case	1100 aluminum
Electrodes	1100 aluminum
Insulation	Alumina ceramic
Neutron-sensitive material	
Content	Boron enriched in ^{10}B
Thickness, mg/cm^2	1
Gas fill	Nitrogen

Table NI-10. (Cont'd)

Impedance	
Resistance, ohms	
High voltage to ground at 1500 V	10^{11}
Signal to ground at 500 V (each section)	10^{11}
High voltage to signal at 1000 V (each section)	10^{13}
Approximate capacitance, pF	
High voltage to ground	2500
Signal to ground (upper section)	800
Signal to ground (bottom section)	1600
Maximum Ratings	
Voltage between electrodes, V	1500
Temperature, F	250
Thermal neutron flux, nv	5×10^{11}
Fast neutron flux, nv	5×10^{11}
Gamma flux, R/h	5×10^{5}
External pressure, psi	180
Relative humidity, %	100
Irradiation exposure, nvt (before 10% decrease in sensitivity)	1×10^{19}
Typical Operating Characteristics	
Operating voltage, V	200 to 1000
Saturation characteristics, V at nv	200 at 10^{9}, 500 at 5×10^{9}, 800 at 10^{10}
Thermal neutron flux range, nv	1×10 to 2.5×10^{10}
Thermal neutron sensitivity (each section) A/nv	2.75×10^{-13}
Gamma flux range, R/h	10 to 5×10^{5}
Gamma sensitivity (approx, each section), A/R-h	1×10^{-10}

As shown in Figure NI-18, the linear amplifier is packaged in a standard 3-unit-wide module. On the front plate are a meter calibrated from 0 to 7[illegible].875% full power, an indicator to show the setting of the internal link which sets the coarse range gain, a 10-position switch for fine gain adjustment, and a potentiometer with a 10-turn counting dial for extra fine gain adjustment, plus a zero adjustment potentiometer and an output test jack. Table NI-11 summarizes the operating characteristics of the linear amplifier module.

Table NI-11. Linear Amplifier Module Design Data

Input	Full scale current ranges, 0 to 10^{-3} amperes maximum, 0 to 10^{-6} amperes minimum.
Output	0 to 11.5 V dc, corresponding to 0 to 71.875% of full power
Response Time	30 ms to 99% (10^{-3} ampere range), 60 ms to 99% (10^{-6} ampere range).
Accuracy	0.1% of full scale at reference conditions, 0.15% of full scale over the design range.
Linearity	0.1% of full scale.
Repeatability	0.1% of full scale.
Gain adjustments	Range — Internal link adjustment covers 3 decades of full-scale settings from 10^{-2} to 10^{-5} amperes.
	Coarse — Adjustable to 10% of full scale steps.
	Fine — Adjustable for 0 to 10% of full scale providing a maximum fine gain setting resolution of 0.03% of full scale.

5.4.4. Bistable Module

The bistable modules in the power range channels are identical to those used in the source and intermediate range channels described in section 5.2 and Table NI-6 (shown in Figure NI-11). In the power range channels they will function to bypass rod withdrawal hold in both the source and intermediate range channels when reactor power exceeds 10% of full power.

Although not shown in Figures NI-1 or NI-17, these same bistables or additional bistables set at 10% of full power may be used to back up the source range detector power supply cutoff bistables in the intermediate range channels set at 10^{-9} amperes. This will allow an intermediate range channel to be removed from service for maintenance without automatically turning on the source range detector power supplies. All other bistables in the outputs of the power range are part of the reactor protective system.

5.4.5. Power Range Test Module

The power range test module (Figure NI-19) (PRT), along with the flow test module, allows complete testing of the ϕ and $\Delta\phi$ system. The PRT module allows independent testing of the two linear amplifiers and calibration of the sum and difference amplifiers. One of the selector switch positions on the PRT allows the simulated output signals of ϕ and $\Delta\phi$ to be varied independently. The function generator of the reactor protective system is then calibrated by varying the $\Delta\phi$ signal and the f(F) signal independently. The $\phi/\Delta\phi/F$ trip bistable may be checked for proper operation by selecting various setpoints, $f(\Delta\phi) + f(F)$, and comparing this to the input (ϕ).

Table NI-12. Power Range Test Module Design Data

Power supply requirements, V	+15 at 100 ma typical, 125 ma max -15 at 200 ma typical, 225 ma max
Test inputs 1 and 2	
Coarse ranges - link selectable in ranges of	10^{-6} to 10^{-5} A 10^{-5} to 10^{-4} A 10^{-4} to 10^{-3} A
Fine range - within each course range, %	0 to 100
Range adjustment resolution, % full scale	±0.025
Ripple, % full scale	<0.1
Calibration output signals	
Sum: Adjustment, V dc	-0 to -10
Resolution, % full scale	±0.025
Difference: Adjustment, V dc	
Resolution, % full scale	±0.025
Ripple, % full scale	<+0.1

5.4.6. Averaging-Auctioneering Module

A high-level auctioneered signal between the average of channels NI-5 and -6 and the average of channels NI-7 and -8 is provided as an input to the ICS. The average-auctioneer scheme provides

the required isolation and independence needed to prevent single failures from propagating into more than one protection channel. Channels NI-5 and -6 are averaged independent of NI-7 and -8 by separate average modules. Each average module includes a built-in analog average meter. Each averager has the following isolated outputs:

1. Average signal for auctioneering
2. Average signal for computer usage.
3. Average signal capable of driving an external meter.

The auctioneer has the following isolated outputs:

1. Auctioneered average for ICS usage.
2. Auctioneered average for computer usage.
3. Auctioneered average for driving a strip chart recorder.
4. Auctioneered average for driving an external meter.

5.4.7. Σ/Δ Amplifier Modules

The remaining modules making up the power range channel are the summing and the difference amplifiers (Figure NI-20). Both functions (sum and difference) are achieved using the sum/difference amplifiers. The output signal range for the summing amplifier is 0 to +10 volts, representing 0 to 125% full power. The output signal range for the difference amplifier is 0 to -10 volts, representing -62.5% to +62.5% full power. All output signals (0 to +10 V) used for remote indication are buffered through isolation amplifiers.

Table NI-13. Σ/Δ Amplifier Module Design Data

Inputs	Capability of four inputs, including bias voltage so that the output relationship becomes $E_{out} = -0.5(E_1 + E_2 - E_3 - E_4)$
Input span	0 to 10 V and 0 to -10 V, four inputs (E , E_1, E_2, E_3, E_4)
Output span	0 to 10 V (scaled and isolation outputs), 0 to -10 V (E_{out})
Accuracy (worst case)	
E_{out} signal, %	±0.015, ±0.025[a]
Scaled output, % (prime output)	±0.03, ±0.04[a]
Buffered output, T	±0.7
Response time	
E_{out}, ms 10	
Scaled output, ms	10
Drift (30-day measured), %	
E_{out}	0.004
Scaled output	0.007
Ref power supply	0.022

[a] With reference power supply.

SIMPLIFIED INSTRUMENT DRAWING

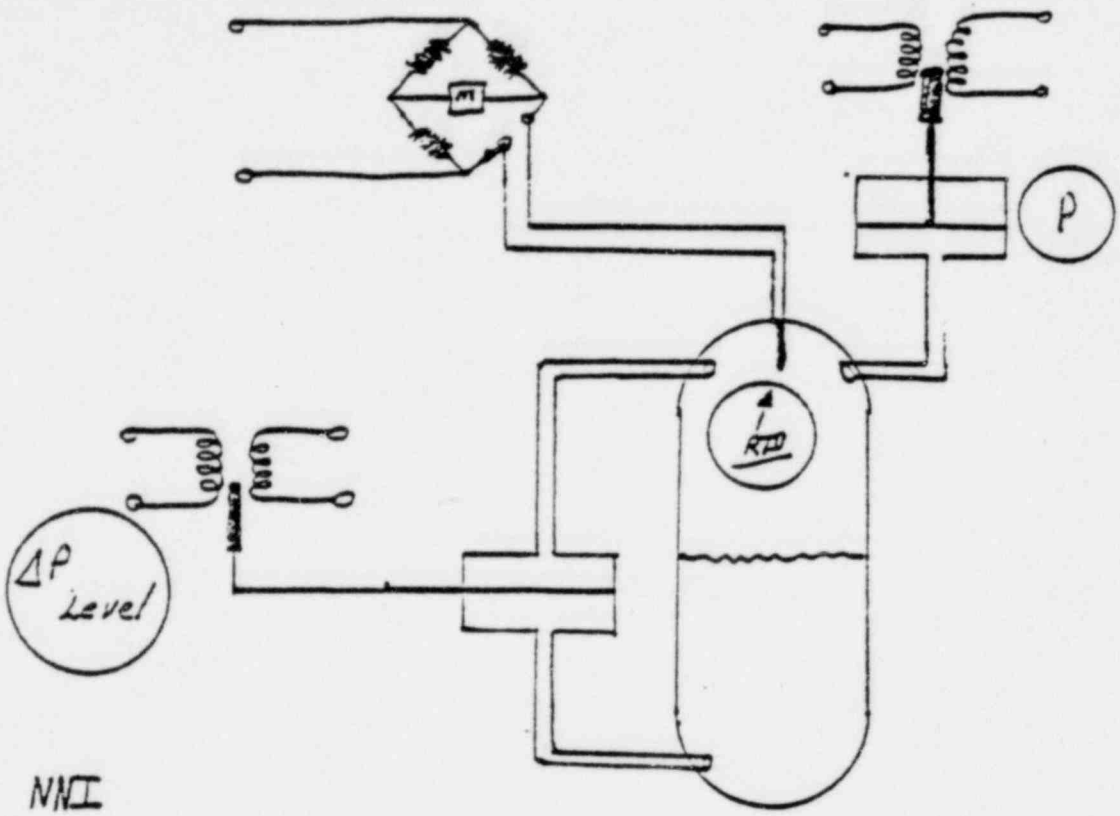

NNI

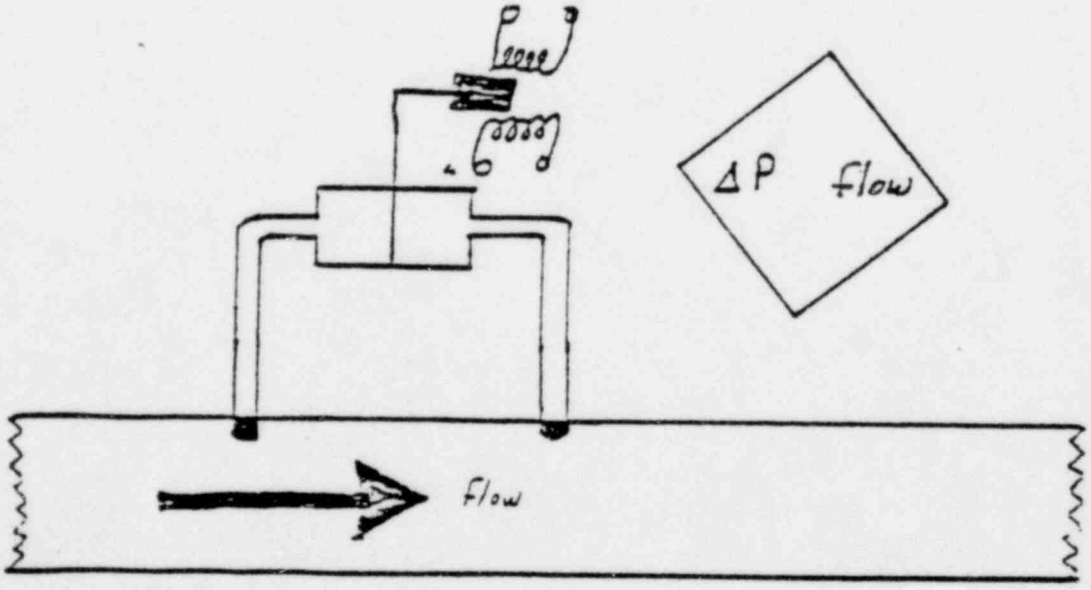

3. Selectable Tavg. NOTE: Following selection of T_{hot} and T_{cold} No further selection required to have 3 Tavg signals as inputs to RC 12 TaS
   a. Loop A Tavg
   b. Loop B Tavg
   c. Unit Tavg (Loop A and B average)
   d. Selector (RC 12 TaS)
      1. RCS flow inputs (A&B Loop)
      2. Automatically will select (A Loop or B Loop) Loop with the highest flow (Not Unit)
         a. Loop pump combination not equal
         b. Flow difference (sheared shaft)
      3. Output
         a. Digital Tavg. Indicator
         b. ICS (Reactor Demand Station)

VII.

REACTOR COOLANT FLOW: Refer to fig 11

RC14A, RC14B INSTRUMENT PREFIX

FT output from gentilly flowtube output to panel for Indication has each loop flow temperature compensated with its respective selected Hot leg Temperature

1. Loop flows indicated
2. Total flow indicated (RECORDER)
3. Loop flow and total flow used in ICS

NNI System

Non-Nuclear Instrumentation is supplied by two buses designated NNI-X and NNI-Y.

NNI-X

Fed from Vital power supply 2-1 24V Breaker (40A) 18 Cab

NNI-Y

Fed from Vital power supply 2-4 24V Breaker (30A) 18 Cab

On the attached figures, an X or Y is marked adjacent to instruments which receive power from NNI-X or NNI-Y respectively

2

3. Selectable Tavg. NOTE: Following selection of T_{hot} and T_{cold} No further selection required to have 3 Tavg signals as inputs to RC 12 TaS
   a. Loop A Tavg
   b. Loop B Tavg
   c. Unit Tavg (Loop A and B average)
   d. Selector (RC 12 TaS)
      1. RCS flow inputs (A&B Loop)
      2. Automatically will select (A Loop or B Loop) Loop with the highest flow (Not Unit)
         a. Loop pump combination not equal
         b. Flow difference (sheared shaft)
      3. Output
         a. Digital Tavg. Indicator
         b. ICS (Reactor Demand Station)

VII.

REACTOR COOLANT FLOW: Refer to fig 11

RC14A, RC14B INSTRUMENT PREFIX

FT output from gentilly flowtube output to console for Indication has each loop flow temperature compensated with its respective selected Hot leg temperature

1. Loop flows indicated
2. Total flow indicated (RC22B-2)
3. Loop flow and total flow used in ICS

FIGURE 1

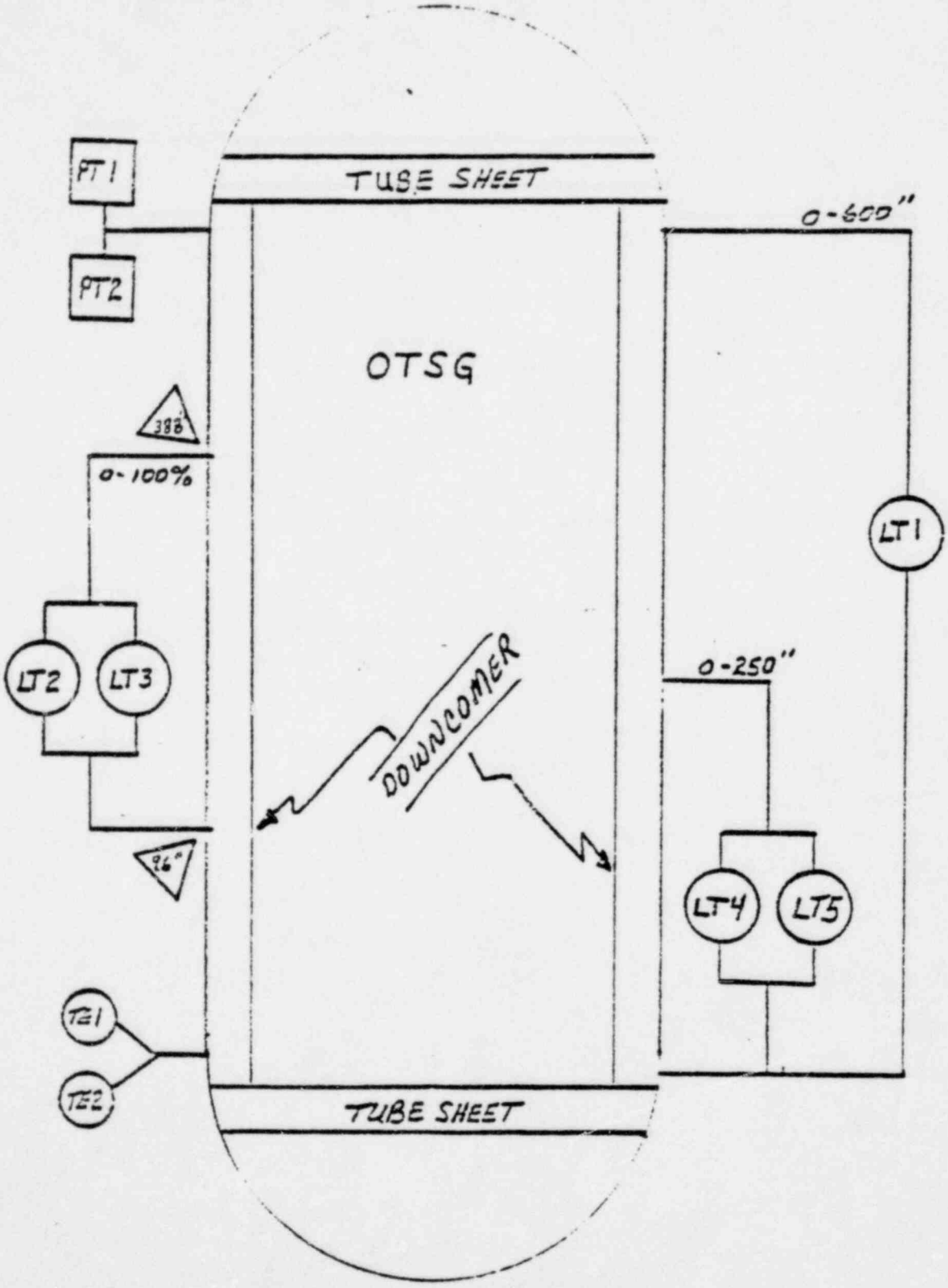

LT2 & LT3 ARE TEMPERATURE COMPENSATED BY TE1 & TE2 RESPECTIVELY

4

SIMPLIFIED INSTRUMENT DRAWING

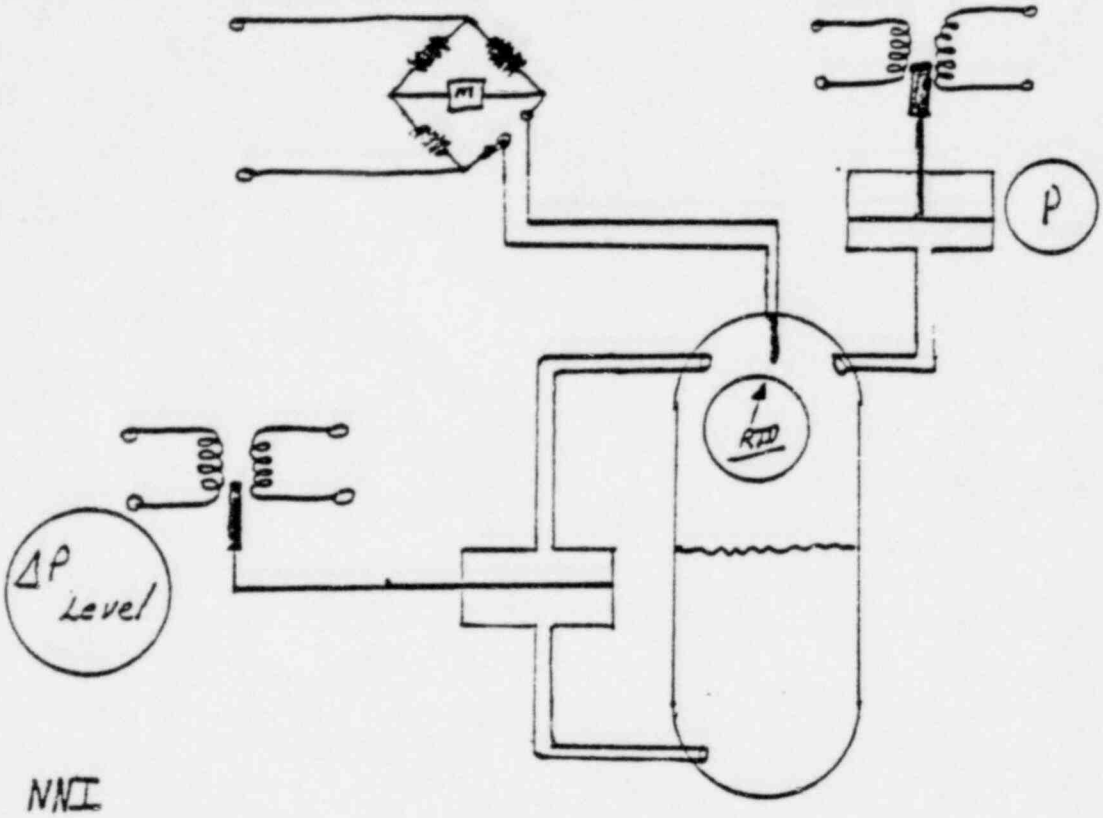

NNI

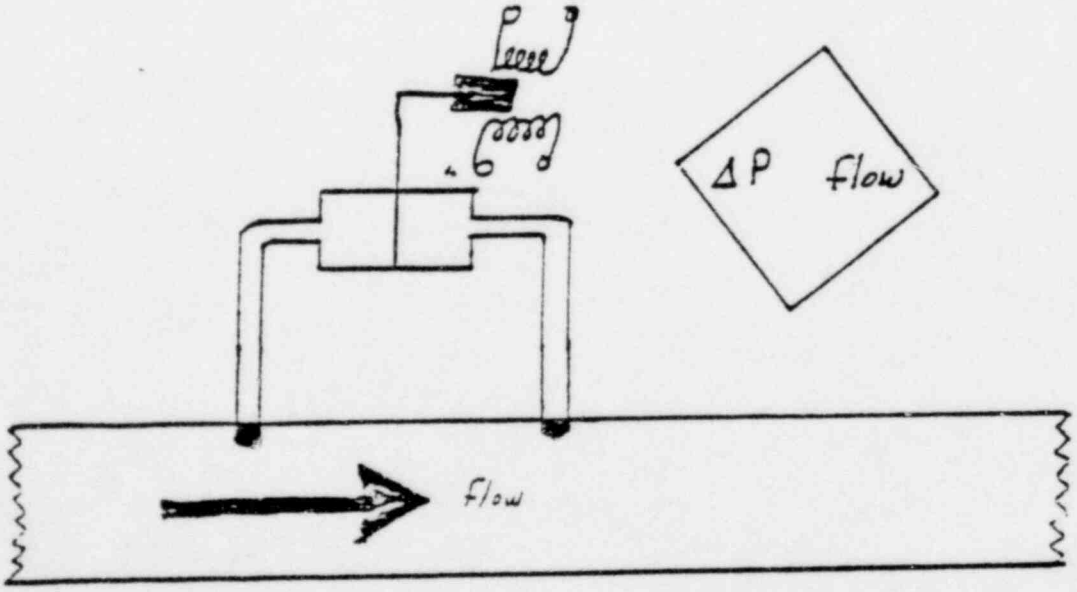

FORM 5013

GENERAL COMPUTATION SHEET

united engineers & constructors inc.

NAME OF COMPANY Jersey Central Power & Light

J.O. NO. 9457.002

SHEET NO. 1 OF 1

DATE 8-1-77

SUBJECT Steam Gen. A+B Shell Temps & Full Range Level

COMP. BY C.M. C'K'D BY

Figure 2

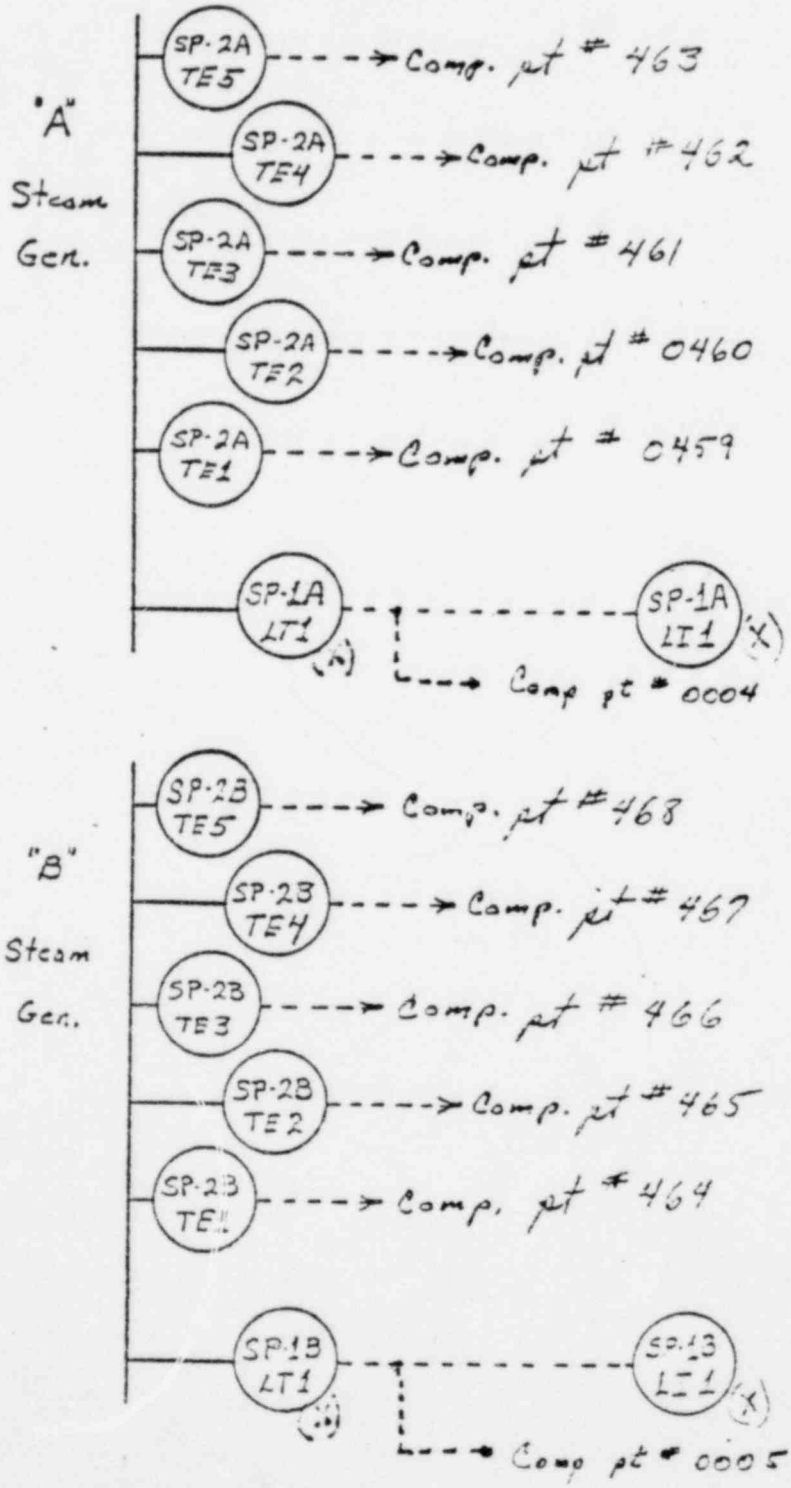

OFFICIAL COPY

FORM 3015

GENERAL COMPUTATION SHEET

united engineers & constructors inc.

J.O. NO. 9459.002

NAME OF COMPANY Jersey Central Power + Light

SHEET NO. 1 OF 1

DATE 8-1-77

SUBJECT Steam Gen "B" Operating Range Level w/Temp. Comp.

COMP. BY RTC CK'D BY —

Figure 3

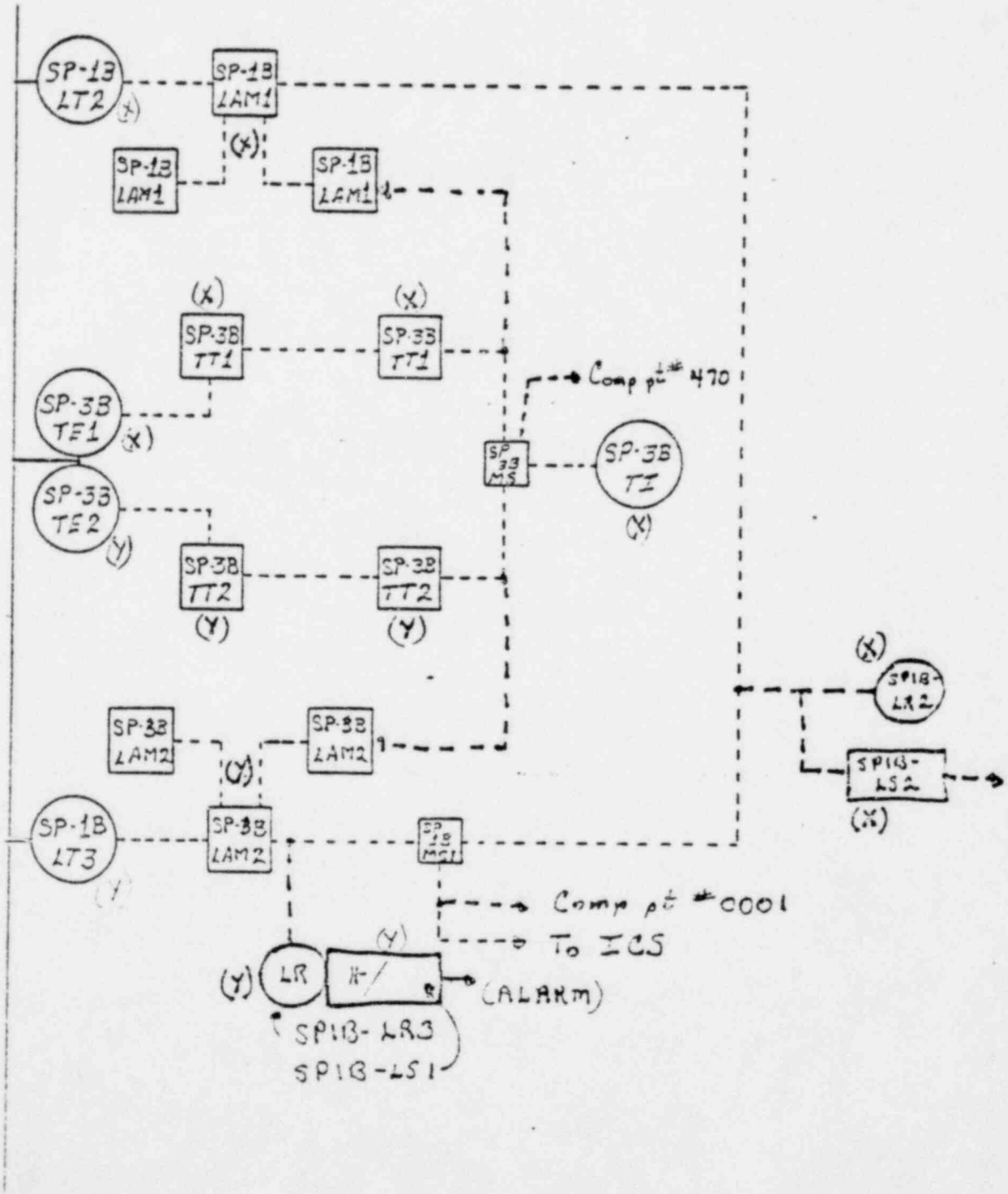

OFFICIAL COPY

FORM 5015

GENERAL COMPUTATION SHEET

united engineers & constructors inc.

NAME OF COMPANY Jersey Central Power & Light

J.O. NO. 9459.002

SHEET NO. 1 OF 1

DATE 8-1-77

SUBJECT Steam Gen. "A" Operating Range Level w/Temp Comp.

COMP. BY RTE C'K'D BY —

Figure 3.4

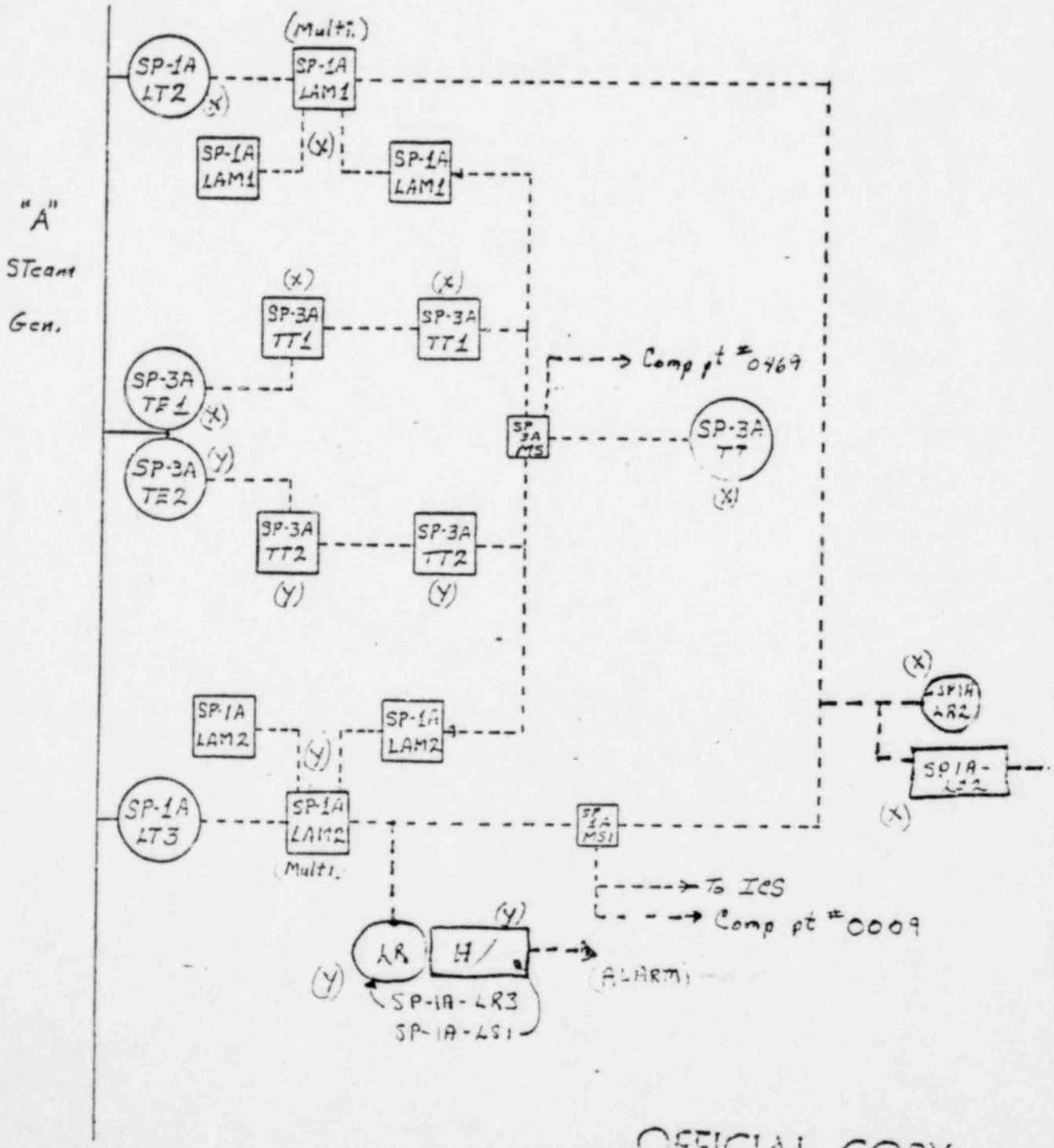

OFFICIAL COPY

FORM 5015

GENERAL COMPUTATION SHEET

united engineers & constructors inc.

NAME OF COMPANY Jersey Central Power & Light

J.O. NO. 9459.002

SHEET NO. 1 OF 1

DATE 2-1-77

SUBJECT Steam Gen A+B Start Up Range Level Insts.

COMP. BY RTC C'K'D BY –

Figure 5

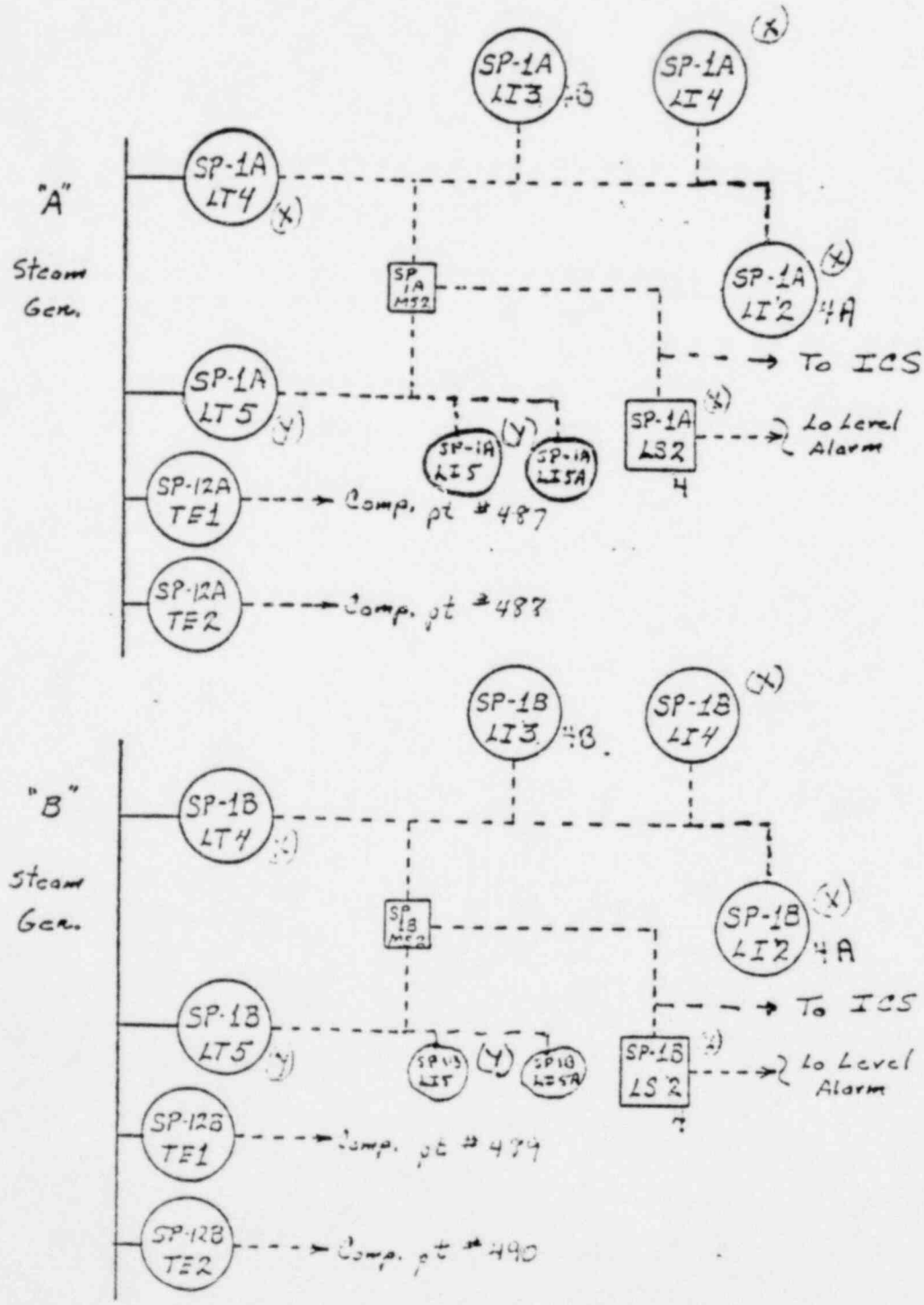

OFFICIAL COPY

FORM 5015

GENERAL COMPUTATION SHEET

united engineers & constructors inc.

NAME OF COMPANY Jersey Central Power & Light

J.O. NO. 9459.002

SHEET NO. 1 OF 1

DATE 8-1-77

SUBJECT Steam Gen. 'A&B' Pressure Instruments

COMP. BY RTC C'K'D BY —

Figure 6

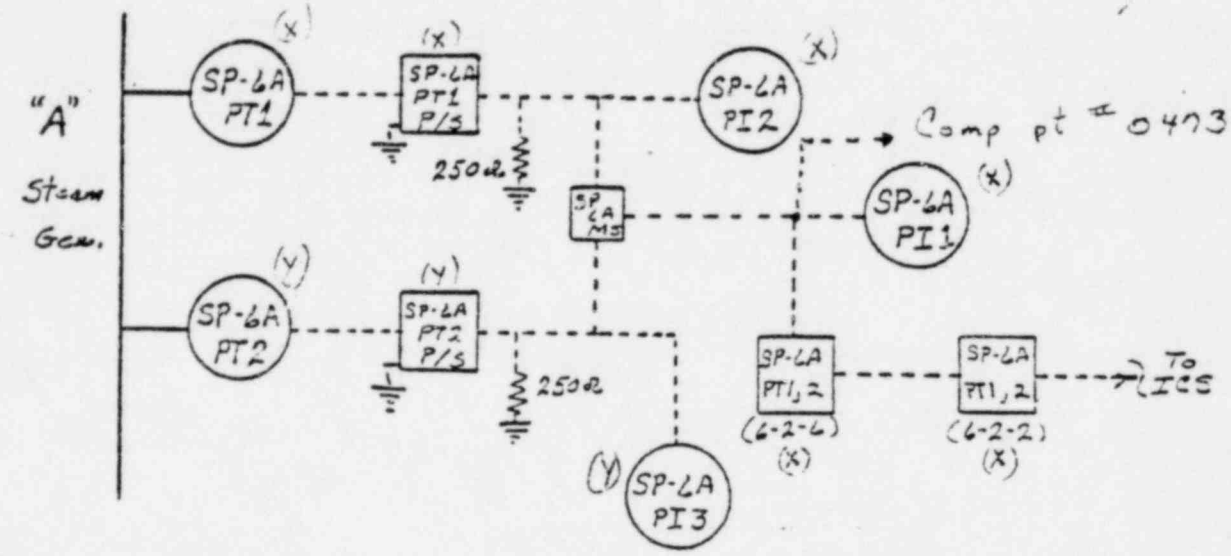

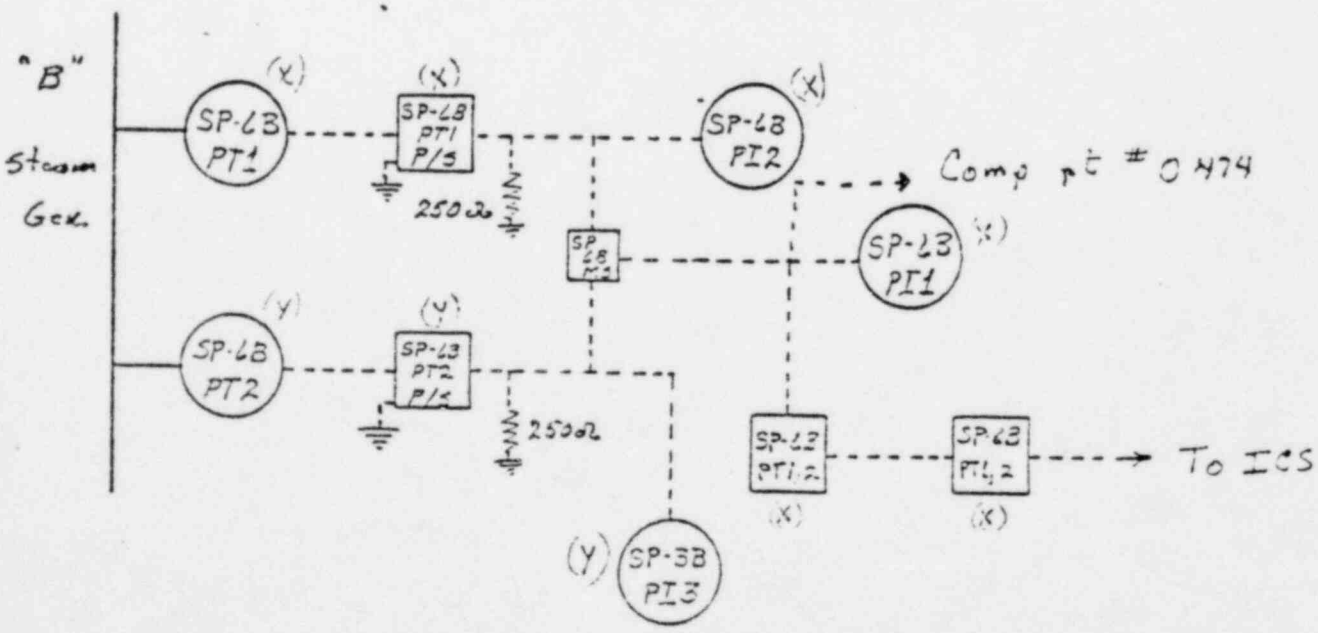

OFFICIAL COPY

FIGURE 4

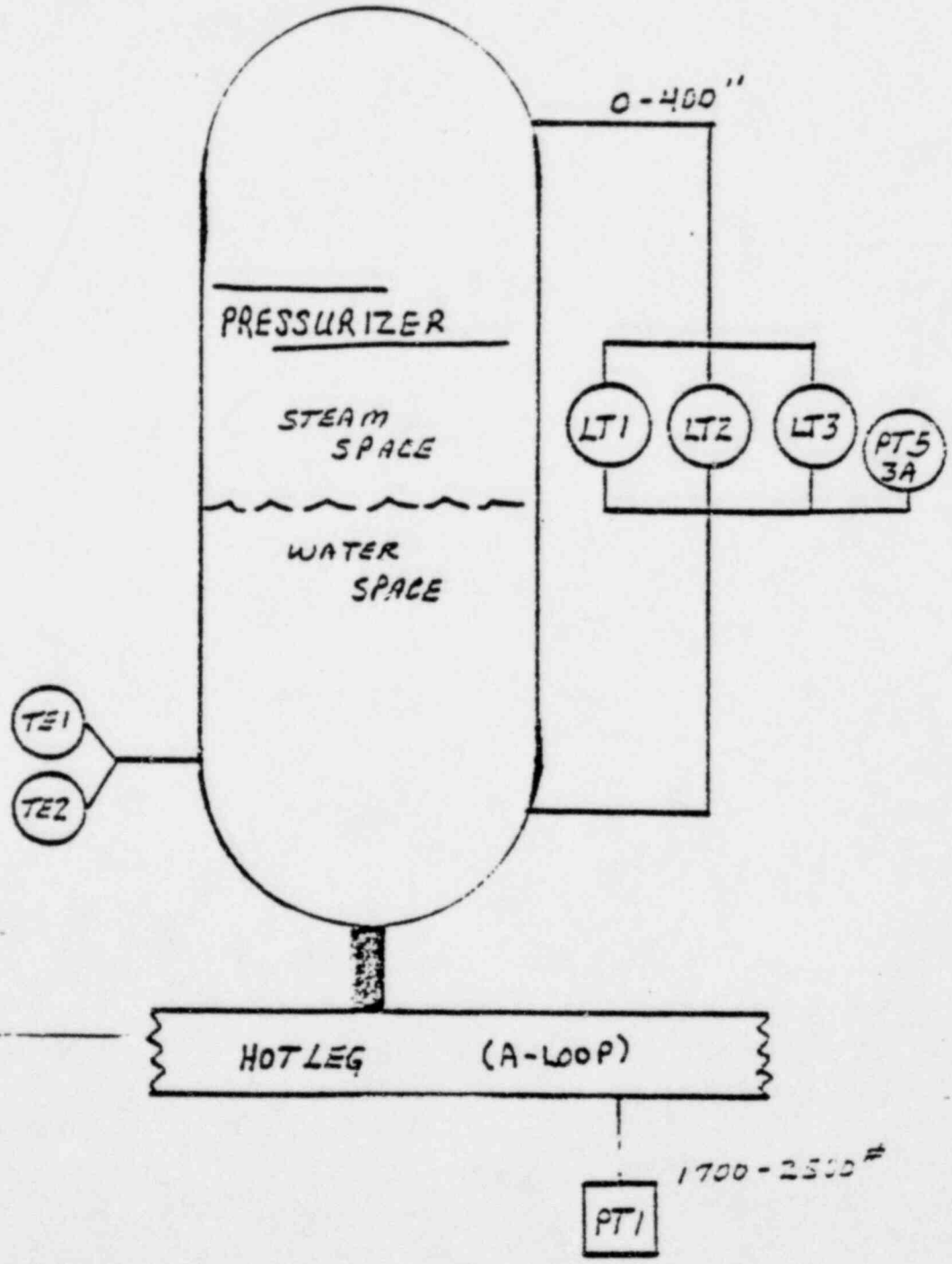
0-400"
PRESSURIZER
STEAM SPACE
WATER SPACE
LT1
LT2
LT3
PT5 3A
TE1
TE2
HOT LEG (A-LOOP)
1700-2500#
PT1

FORM 5015

GENERAL COMPUTATION SHEET

United Engineers and Constructors

NAME OF COMPANY

J. O. NO.

SHEET NO. 11 OF

SUBJECT Reactor Coolant - Pressurizer Level - Temp Instr

DATE

COMP. BY C'K'D BY

Figure 5

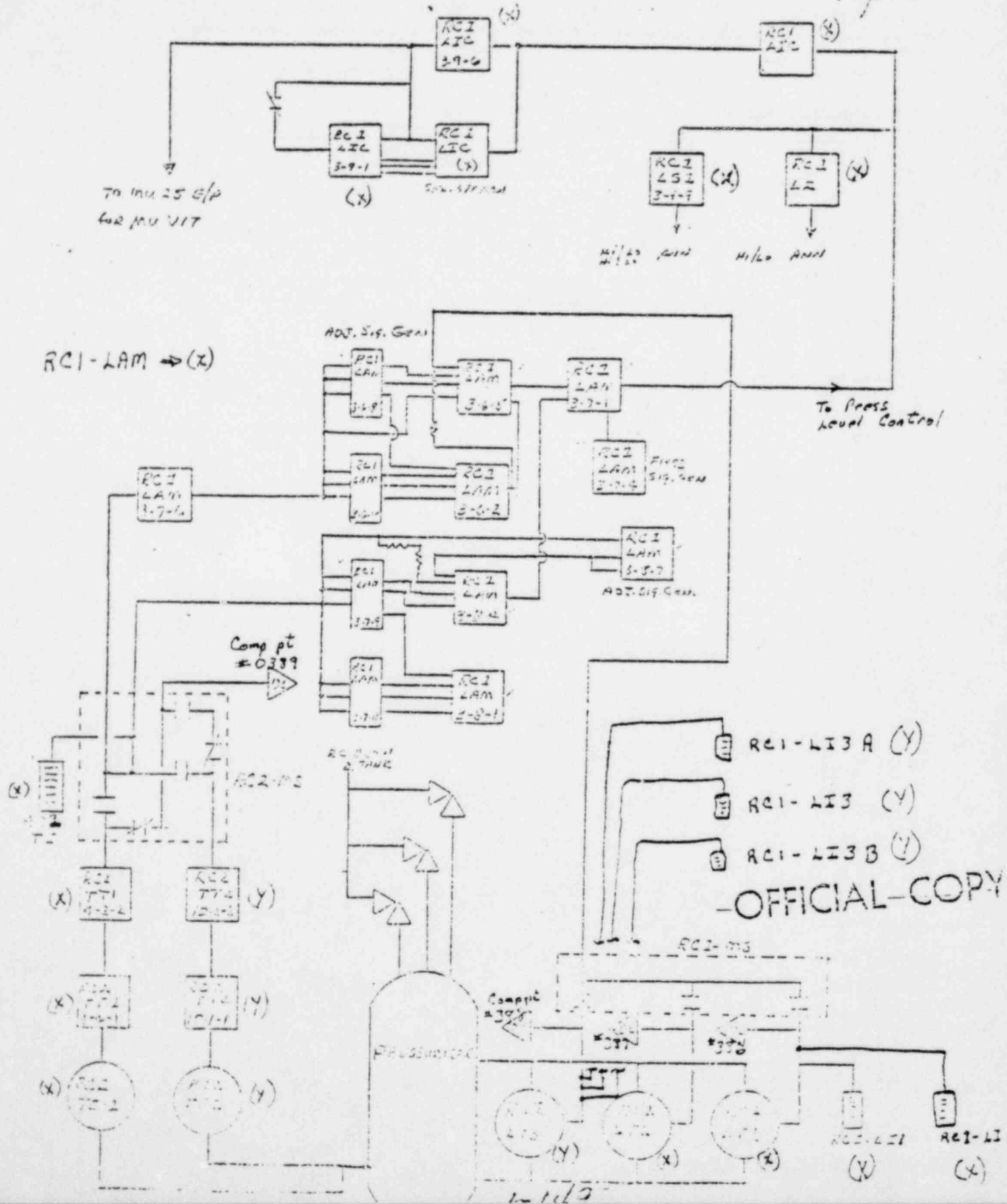

-OFFICIAL-COPY

FORM 5016

GENERAL COMPUTATION SHEET

[illegible] & constructors inc.

NAME OF COMPANY _____ J. O. NO. _____

SHEET NO. _____ OF _____

SUBJECT RC Pressure Inst. DATE _____

COMP. BY _____ C'K'D BY _____

Figure 7

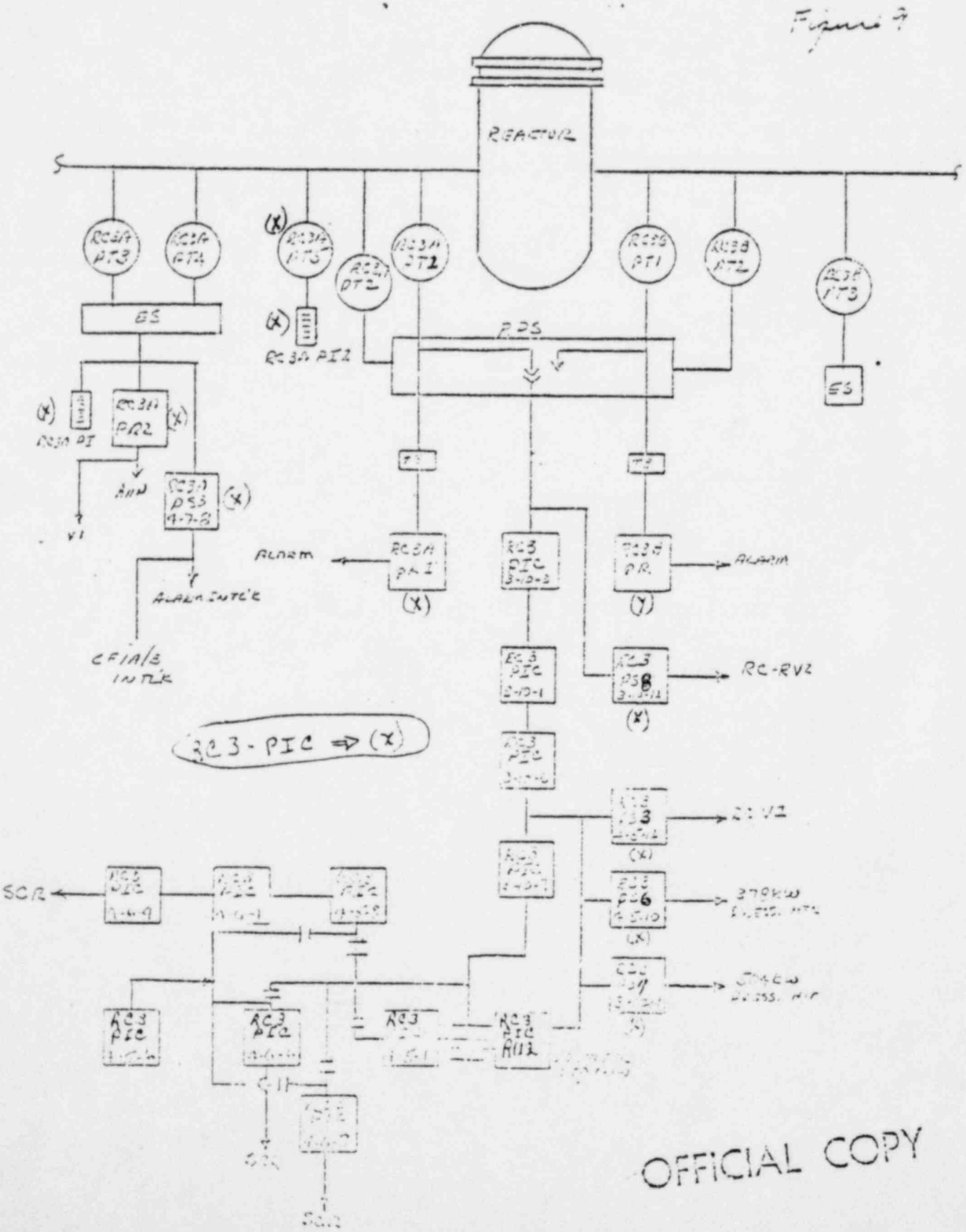

FORM 5015

GENERAL COMPUTATION SHEET

NUSCO engineers & consultants inc.

NAME OF COMPANY _____ J. O. NO. _____

SHEET NO. 18 OF _____

SUBJECT Reactor Coolant - Pressurizer Temp. Inst. DATE _____

COMP. BY _____ C'K'D BY _____

Figure 10

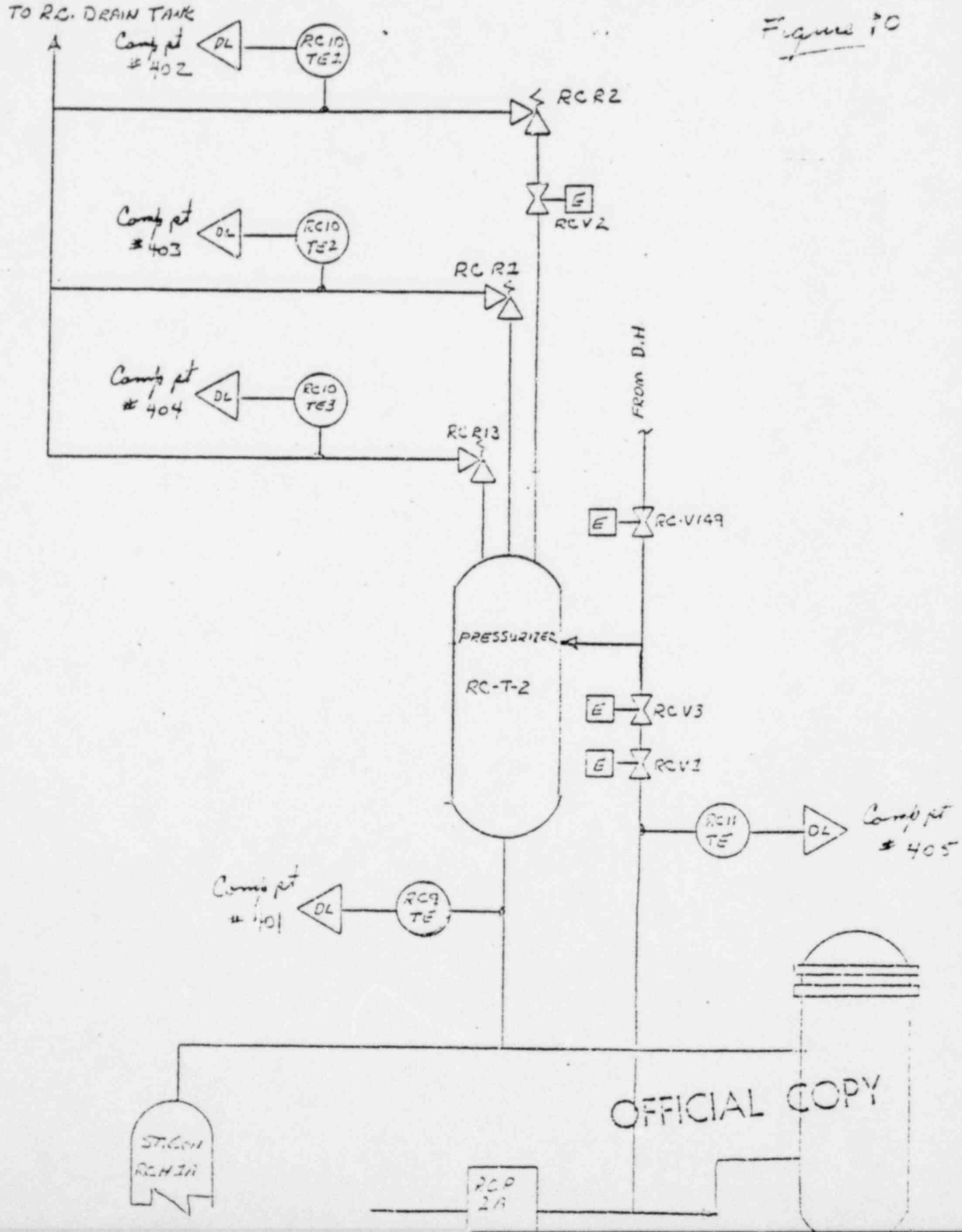

OFFICIAL COPY

FORM 2015

GENERAL COMPUTATION SHEET

United Engineers & Constructors Inc.

NAME OF COMPANY

J. O. NO.

SHEET NO. OF

DATE

SUBJECT RC Flow

COMP. BY CHK'D BY

Figure 11

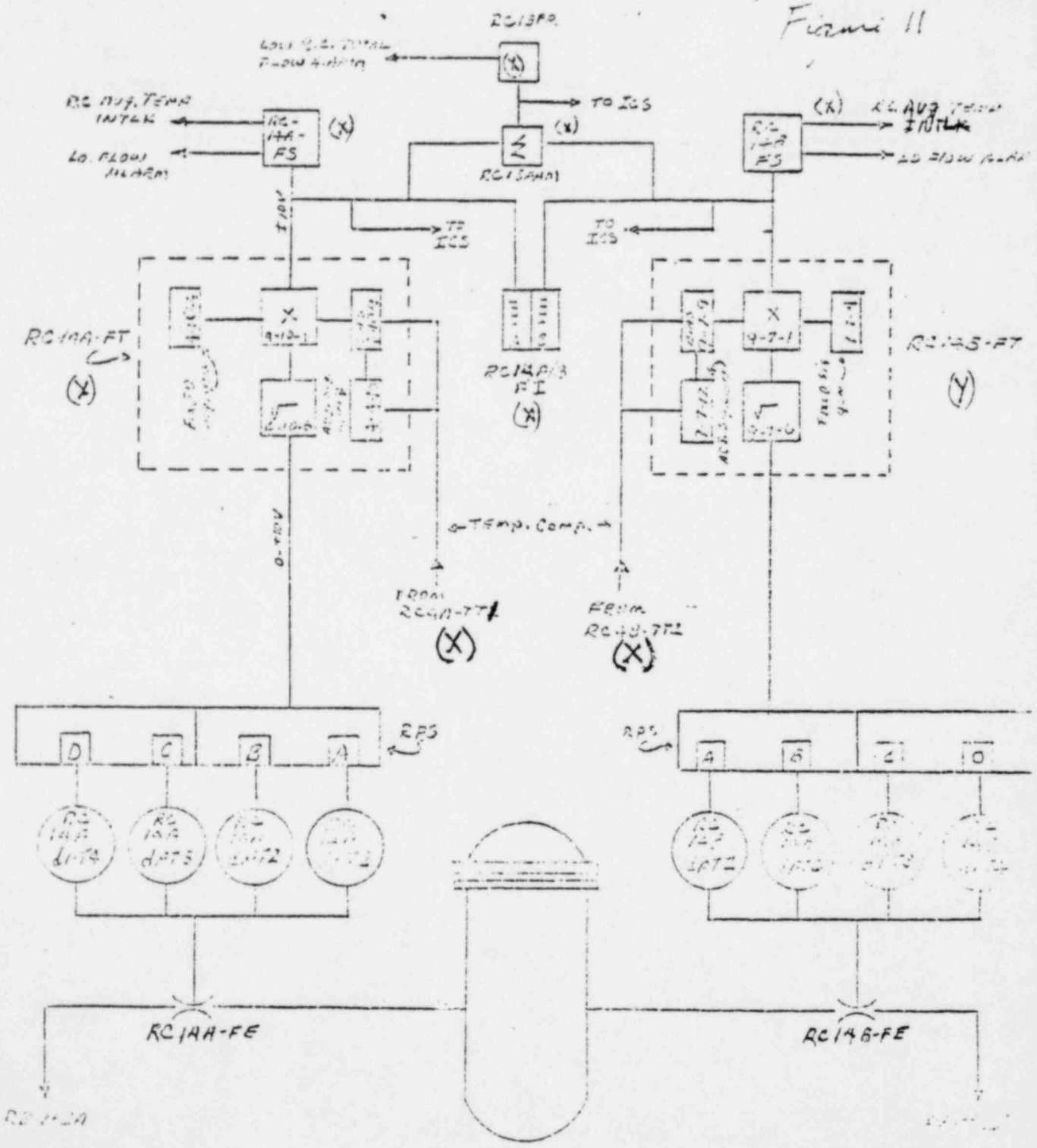

OFFICIAL COPY

NNI

I. Steam Generator Level:
Refer to Figure 1 and 2 to 5
Instrument Prefis SP1A, SP1B
Brief description of level transmitters
Uses differential pressure for level indication
LT 1 Full (wide) range level 0-600"
Not temperature compensated
Indication on LI1
LT 4 & LT 5 Startup (low) range level 0-250"
Not temperature compensated
Indication LI3 + 4 5
LT 2 & LT 3 Operating range level which reads out 0-100% corresponding to 96" to 388"
Temperature compensated
Indication on level recorders
LS1-2 High/low level alarm
MS - Manual selector switch
The unselected input goes to the computer

II. Steam Generator Pressure: Refer to fig 6
Instrument Prefix SP6A, SP6B
PT1, PT2 Outputs sent to control room for indication and the computer
PI1 Indication for selected pressure with selected pressure used in ICS.
PI2 Local (NNI cabinets) indication of PT1
MS Manual selector switch
Unselected input goes to the computer

Temperature Compensation
As temperature increases the density decreases. Level indication is done by using a difference in pressure

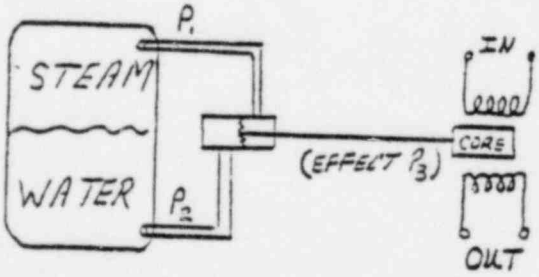

As core changes position it will vary the output voltage.

P3 = P2-P1 where P2 = Stm. Press. + Water Press.
and P1 = Stm. Press
then P3 = Water Press.

With temperature compensation we make the output signal forget about the decrease in waterpressure (because of density↓) as the temperature increases.

We temperature compensate to counteract the effects of density change.

For example if we did not temperature compensate as temperature ↑ the density ↓ and the indicated level of water would ↓ .

III. Pressurizer Level: Refer to Figure 4 and 5
Instrument prefix RC1

LT 1, 2, 3, Uncompensated level transmitters full range indication 0-400". Selected transmitter is compensated by selected water space temperature control room indication on level recorder and computer with the computer having capability to display both compensated and uncompensated level.

LaM Level-temperature compensation network

LR 1 LS1,2 Used for alarms

L1C Hand/auto station to control MU-V17 makeup to RCS

IV. Temperature:

Prefix RC2

TE1, TE2 - Indication in control room and selected temperature compensates selected level.

MS - manual selector, unselected goes to the computer

V. Pressure: Refer to fig 9.

Prefix RC3A, RC3B

PT1 - Narrow range 1700-2500# feeds RPS and output Jack. Used for pressure control and indication.

The pressure transmitters are located on the "A" and "B" hot legs

PT 5, 3A - Low range pressure indication
Not selectable
Used during heatup and cooldown when RCS side range pressure 0-2500# is not accurate enough.

VI. Reactor Coolant Temperature Refer to Fig 12

1. Selectable T_{hot} per loop
   a. Selected T_{hot} uses
      1. Console RC Flow Temperature Compensation
      2. Loop ΔT
      3. Loop Tavg
      4. Reactor T_{hot} Selector
         a. Indication (Recorder)
         b. ICS (Feed water)
      5. Gauge Indication
      6. Loop A/B Avg. T_{hot} (no selection)
         a. Unit ΔT
         b. Unit Tavg

2. Selectable T_{cold} (per leg, per loop (average))
   a. Selected T_{cold} uses
      1. Loop ΔT
      2. Loop Tavg.
      3. Gauge Indication
      4. ΔT_{cold}
         a. Indication
         b. ICS
      5. Loop A/B Avg. T_{cold} (no selection)
         a. Unit ΔT
         b. Unit Tavg.

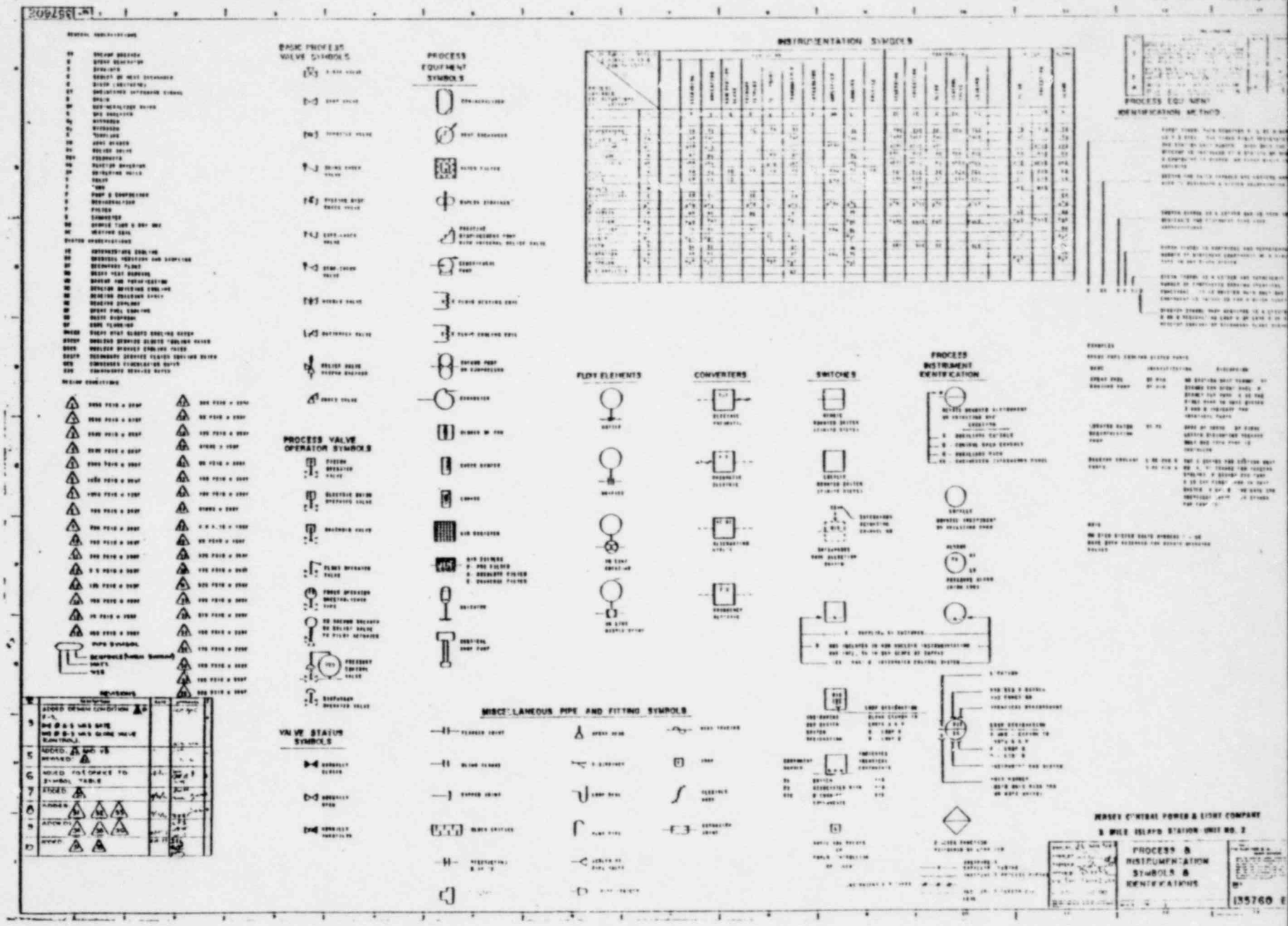
BASIC PROCESS VALVE SYMBOLS
PROCESS EQUIPMENT SYMBOLS
INSTRUMENTATION SYMBOLS
PROCESS EQUIPMENT IDENTIFICATION METHOD
PROCESS VALVE OPERATOR SYMBOLS
FLOW ELEMENTS
CONVERTERS
SWITCHES
PROCESS INSTRUMENT IDENTIFICATION
VALVE STATUS SYMBOLS
MISCELLANEOUS PIPE AND FITTING SYMBOLS
JERSEY CENTRAL POWER & LIGHT COMPANY
OYSTER CREEK STATION UNIT NO. 2
PROCESS & INSTRUMENTATION SYMBOLS & IDENTIFICATIONS

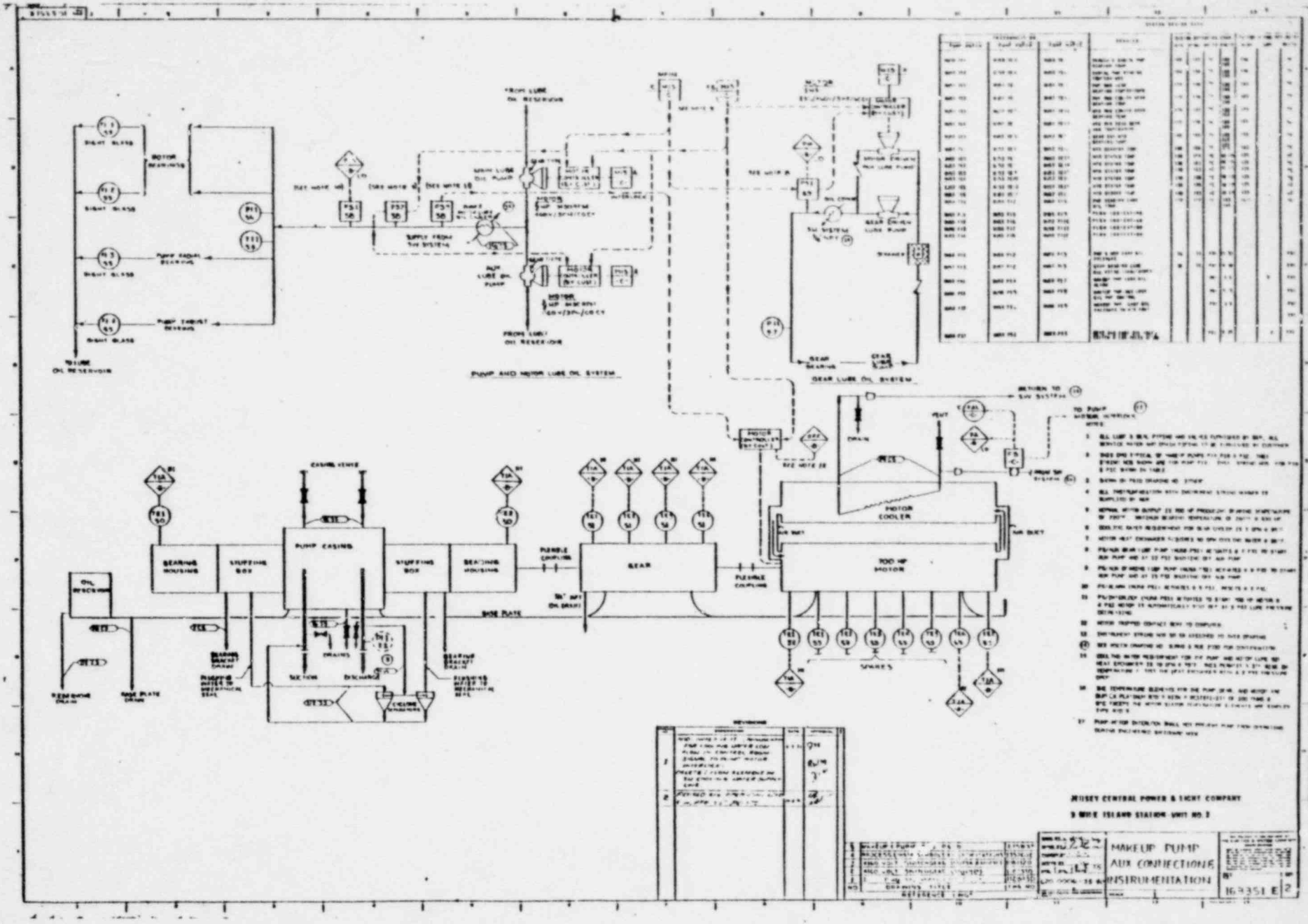
PUMP AND MOTOR LUBE OIL SYSTEM
GEAR LUBE OIL SYSTEM
PUMP CASING
BEARING HOUSING
STUFFING BOX
GEAR
700 HP MOTOR
MOTOR COOLER
SHAFT
BASE PLATE
MAKEUP PUMP
AUX CONNECTIONS
INSTRUMENTATION
NEW HAMPSHIRE POWER & LIGHT COMPANY
SEABROOK ISLAND STATION UNIT NO. 2

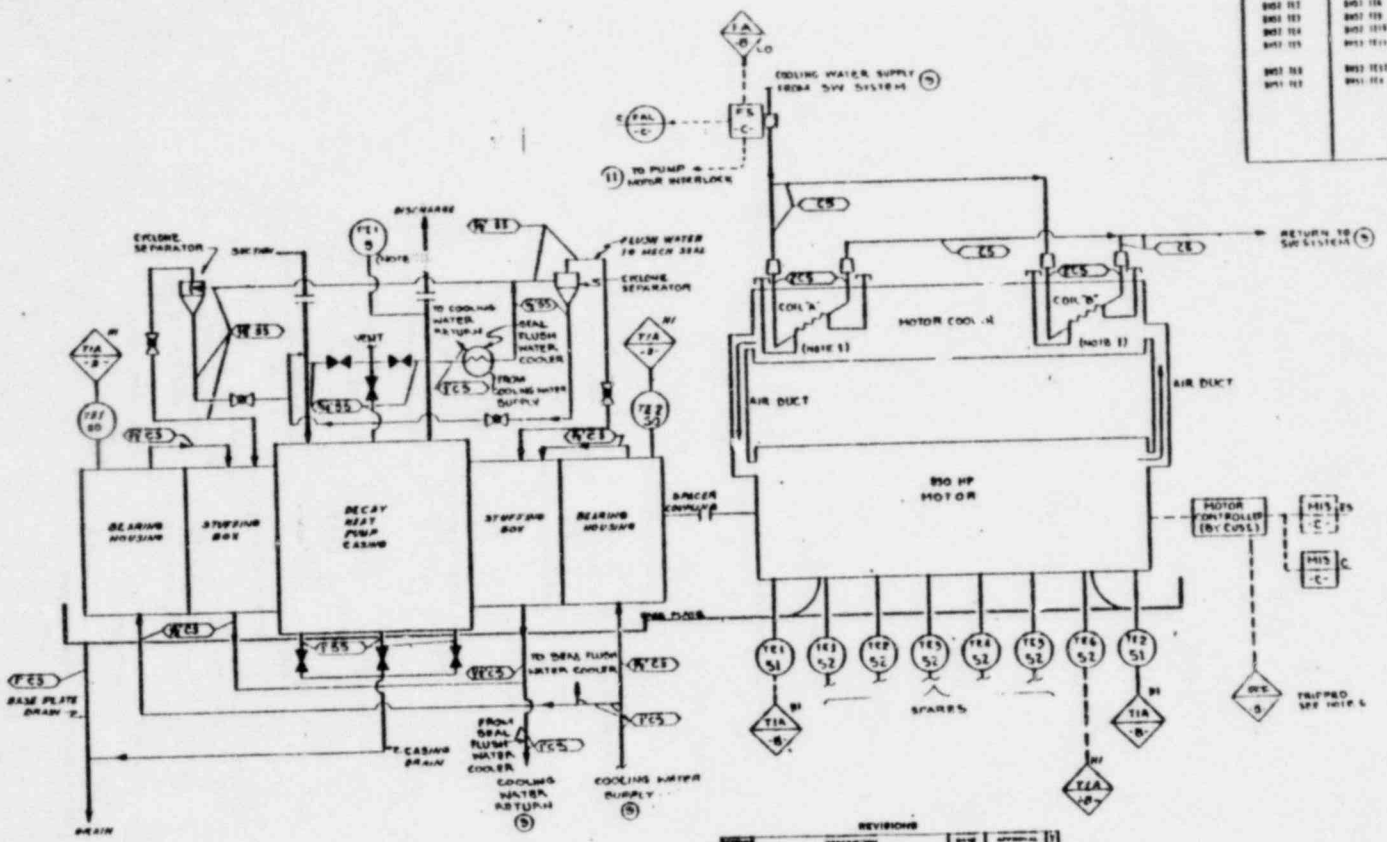

INSTRUMENTATION NO.		SERVICE	DESIGN OPERATING CONDITIONS					DESIGN ALARM SET POINT		
PUMP ON P.I.B.	PUMP ON P.I.B.		NOT	PRESS	PSIG	TEMP		HIGH	LOW	UNITS
[illegible]	[illegible]	[illegible]	[illegible]	[illegible]	[illegible]	[illegible]		[illegible]		[illegible]
[illegible]	[illegible]	[illegible]	[illegible]	[illegible]	[illegible]	[illegible]		[illegible]		[illegible]
[illegible]	[illegible]	[illegible]	[illegible]	[illegible]	[illegible]	[illegible]		[illegible]		[illegible]
[illegible]	[illegible]	[illegible]	[illegible]	[illegible]	[illegible]	[illegible]		[illegible]		[illegible]
[illegible]	[illegible]	[illegible]	[illegible]	[illegible]	[illegible]	[illegible]		[illegible]		[illegible]
[illegible]	[illegible]	[illegible]	[illegible]	[illegible]	[illegible]	[illegible]		[illegible]		[illegible]
[illegible]	[illegible]	[illegible]	[illegible]	[illegible]	[illegible]	[illegible]		[illegible]		[illegible]
[illegible]	[illegible]	[illegible]	[illegible]	[illegible]	[illegible]	[illegible]		[illegible]		[illegible]
[illegible]	[illegible]	[illegible]	[illegible]	[illegible]	[illegible]	[illegible]		[illegible]		[illegible]
[illegible]	[illegible]	[illegible]	[illegible]	[illegible]	[illegible]	[illegible]		[illegible]		[illegible]
[illegible]	[illegible]	[illegible]	[illegible]	[illegible]	[illegible]	[illegible]		[illegible]		[illegible]
[illegible]	[illegible]	[illegible]	[illegible]	[illegible]	[illegible]	[illegible]		[illegible]		[illegible]
[illegible]	[illegible]	[illegible]	[illegible]	[illegible]	[illegible]	[illegible]		[illegible]		[illegible]
[illegible]	[illegible]	[illegible]	[illegible]	[illegible]	[illegible]	[illegible]		[illegible]		[illegible]

NOTES:

1. EACH HEAT EXCHANGER HAS TWO INLET AND TWO OUTLET PIPES. EITHER INLET PIPE AND THE DIAGONAL OUTLET PIPE SHALL BE USED. HEAT EXCHANGERS SHALL BE PIPED IN PARALLEL.

2. ALL SERVICE WATER, VENT, AND DRAIN PIPING TO BE FURNISHED BY CUSTOMER.
3. THIS DWG TYPICAL OF PUMPS ON P.I.B. & I.R. TAGS STRING NOS. SHOWN ARE FOR PUMP ON P.I.B. TAGS STRING NOS FOR PUMP P.I.B. SHOWN IN TABLE.
4. SHOWN ON P&ID DRAWING NO. [illegible].
5. ALL INSTRUMENTATION WITH INSTRUMENT STRING NUMBERS IS SUPPLIED BY B&W.
6. MOTOR TRIPPED CONTACT SENT TO COMPUTER.
7. SERVICE WATER REQUIREMENT IS 30 GPM PER UNIT (INCLUDES 20 GPM FOR MOTOR).
8. INSTRUMENT STRING NOS NO THRU 53 ASSIGNED TO THIS DWG.
9. SEE DWG [illegible] FOR [illegible] FOR CONT.
10. TEMPERATURE ELEMENTS FOR THE PUMP AND MOTOR WILL BE PLATINUM BULB TYPE RTD'S WITH A RESISTANCE OF 100 OHMS @ 0°C EXCEPT THE MOTOR STATOR ELEMENTS WILL BE SIMPLEX TYPE RTD'S.
11. PUMP-MOTOR INTERLOCK SHALL NOT PREVENT PUMP FROM OPERATING DURING ENGINEERED SAFEGUARD MODE.

REVISIONS

NO.	DESCRIPTION	DATE	APPROVAL
1	MOD: MOTOR SHUT INTERLOCK SIGNAL WITH SW WATER IS SUPPLIED TO MOTOR COMPUTER ROOM PANEL INSTEAD FOR LOW SW SUPPL. TO MOTOR; REV: NOTE 3 TO REFLECT ON P.I.B. & I.R. NOTE; NOTE 9 TO REFLECT SW FED FOR MOTOR; DELETE 1 FLOW ELEMENT IN SW SUPPLY LINE TO MOTOR	[illegible]	[illegible]
2	ADDED: SEAL FLUSH & COOLER, [illegible]	[illegible]	[illegible]
3	REVISED [illegible]	[illegible]	[illegible]

NO.	DESCRIPTION	DRAWING NO.
3	DECAY HEAT SYS P&ID	[illegible]
2	ELEM. DIAG. 4160 VOLT SWITCHGEAR	108052D
1	PROCESS & INSTR. SYMBOLS & IDENT	135760E
NO.	DESCRIPTION TITLE	DWG NO.

REFERENCE DRAWINGS

JERSEY CENTRAL POWER & LIGHT COMPANY

3 MILE ISLAND STATION - UNIT NO. 2

DECAY HEAT REMOVAL PUMP AUX. CONNECTION & INSTRUMENTATION

112787 D 3

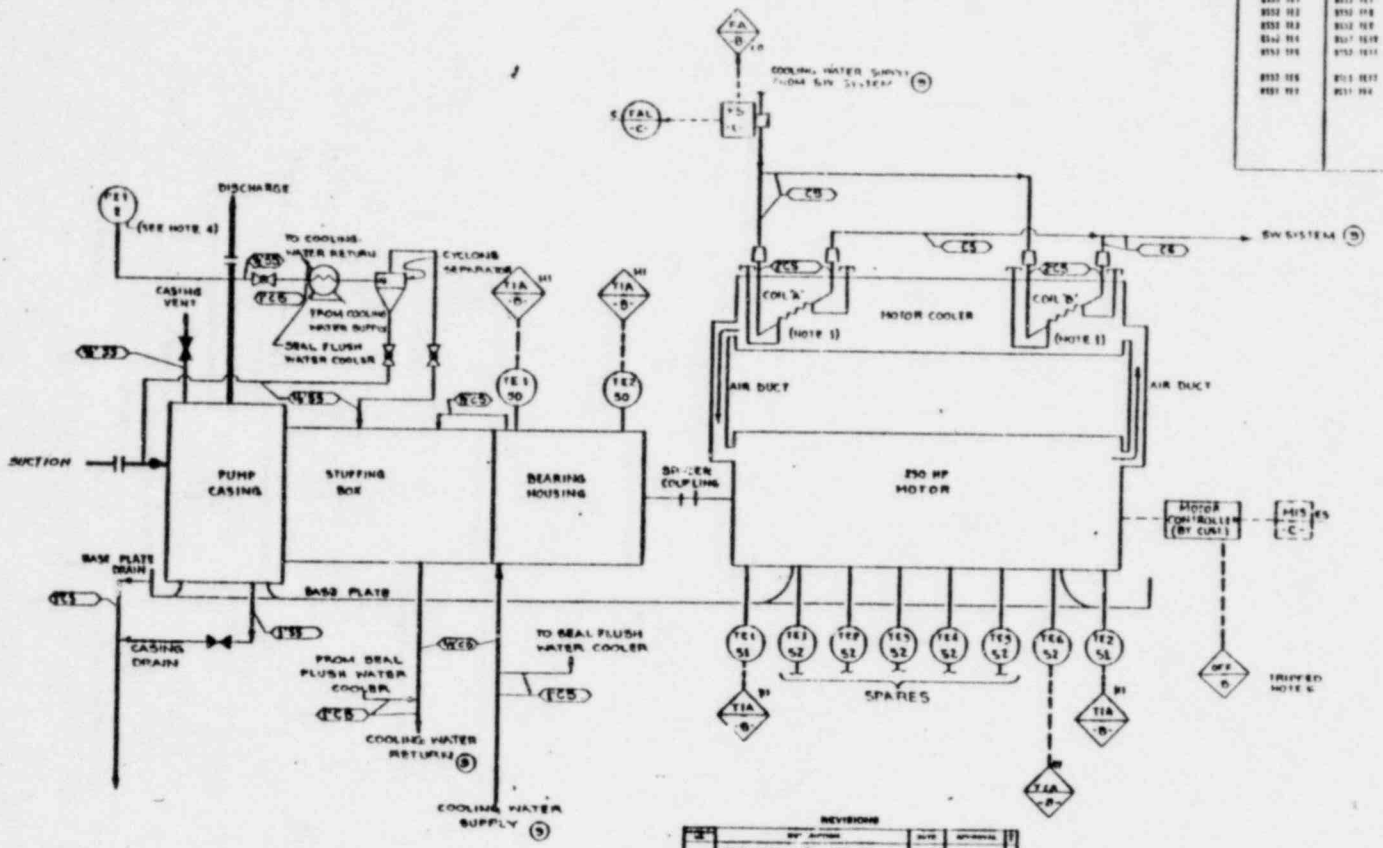

INSTRUMENTATION NO.		SERVICE	SYSTEM OPERATING CONDITIONS				SYSTEM ALARM SET POINT		
PUMP NO. P-10	PUMP NO. P-20								
[illegible]	[illegible]	PUMP BEARING TEMP PUMP END	[illegible]	[illegible]	[illegible]	[illegible]	[illegible]		[illegible]
[illegible]	[illegible]	PUMP BEARING TEMP MOTOR END	[illegible]	[illegible]	[illegible]	[illegible]	[illegible]		[illegible]
[illegible]	[illegible]	MOTOR BEARING TEMP. PUMP END	[illegible]	[illegible]	[illegible]	[illegible]	[illegible]		[illegible]
[illegible]	[illegible]	MOTOR STATOR TEMP.	[illegible]	[illegible]	[illegible]	[illegible]	[illegible]		[illegible]
[illegible]	[illegible]	MOTOR STATOR TEMPERATURE	[illegible]	[illegible]	[illegible]	[illegible]	[illegible]		[illegible]
[illegible]	[illegible]	MOTOR STATOR TEMPERATURE	[illegible]	[illegible]	[illegible]	[illegible]	[illegible]		[illegible]
[illegible]	[illegible]	MOTOR STATOR TEMPERATURE	[illegible]	[illegible]	[illegible]	[illegible]	[illegible]		[illegible]
[illegible]	[illegible]	MOTOR STATOR TEMPERATURE	[illegible]	[illegible]	[illegible]	[illegible]	[illegible]		[illegible]
[illegible]	[illegible]	MOTOR BEARING TEMPERATURE	[illegible]	[illegible]	[illegible]	[illegible]	[illegible]		[illegible]
[illegible]	[illegible]	MOTOR BEARING TEMPERATURE	[illegible]	[illegible]	[illegible]	[illegible]	[illegible]		[illegible]

NOTES:

1. EACH HEAT EXCHANGER HAS TWO INLET AND TWO OUTLET PIPES. EITHER INLET PIPE AND THE DIAGONAL OUTLET PIPE SHALL BE USED. HEAT EXCHANGERS SHALL BE PIPED IN PARALLEL.

COIL CONNECTIONS
● CAPPED BY CUSTOMER FOR ISOLATION

2. ALL SERVICE WATER, VENT, AND DRAIN PIPING TO BE SUPPLIED BY CUSTOMER.
3. THIS DWG TYPICAL OF PUMPS 1C-P-1A & 1B. INSTRUMENT STRING NOS. SHOWN ARE FOR PUMP 1A P-1A. INSTRUMENT STRING NOS FOR PUMP P-1B SHOWN IN TABLE.
4. SHOWN ON PIPE DRAWING NO. 211437.
5. ALL INSTRUMENTATION WITH INSTRUMENT STRING NUMBERS TO BE SUPPLIED BY GPU.
6. MOTOR TRIPPED CONTACT SENT TO COMPUTER.
7. SERVICE WATER REQUIREMENT IS 20 GPM FOR UNIT (INCLUDES 20 GPM FOR MOTOR).
8. INSTRUMENT STRING NOS. TO BE ASSIGNED TO THIS DRAWING.
9. SEE EACH DWG NO. ON DWG FOR CONT.
10. TEMPERATURE ELEMENTS FOR THE PUMP AND MOTOR WILL BE PLATINUM RTD'S. THE RTD'S HAVE A RESISTANCE OF 100 OHMS @ 0°C EXCEPT THE MOTOR STATOR ELEMENTS WILL BE SIMPLEX RTD'S.

REVISIONS

NO.	BY	DESCRIPTION	DATE	APPROVAL
1		ADD: HOSES SEAL CONTROL DRAIN BANKS ADDED FOR LOW SW FLOWS. DELETE: FLOW ELEMENT IN SW SUPPLY LINES. REVISE NOTE 3 TO INDICATE AS PER CUST. NOTE 7 TO INCLUDE SW REQ. REMARKS	[illegible]	[illegible]
2		ADDED SEAL WATER COOLER. REVISED COOLING WATER PIPING. DELETED PRESSURE GAUGES. REVISED ALARM VALUES.	[illegible]	[illegible]
3		REVISED SW OPERATING CONDITIONS & ALARM POINTS	[illegible]	[illegible]

3	RB SPRAY SYS P&ID	2756-1
2	ELEM. DIAG. 4160 VOLT SWITCHGEAR	1080220
1	PROCESS & INSTRU. SYMBOLS & LEGEND	1367268
GB	DRAWING TITLE	DWG NO.

REFERENCE DRAWINGS

JERSEY CENTRAL POWER & LIGHT COMPANY

3 MILE ISLAND STATION - UNIT NO. 2

REACTOR BUILDING SPRAY PUMP AUX. CONNECTION & INSTRUMENTATION

112788 D 3

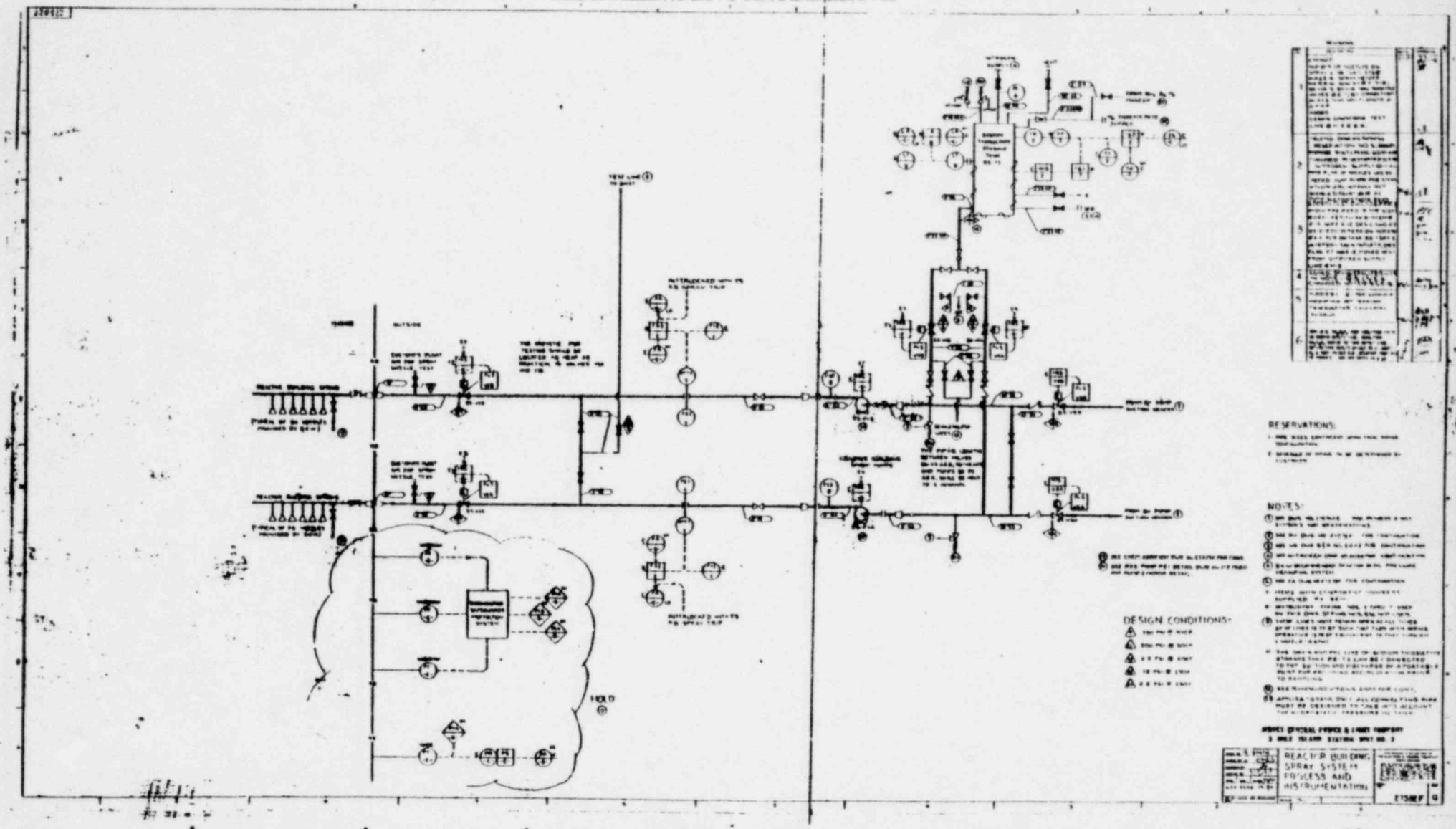
RESERVATIONS:
NOTES:
DESIGN CONDITIONS:
HOLD
REACTOR BUILDING SPRAY SYSTEM PROCESS AND INSTRUMENTATION

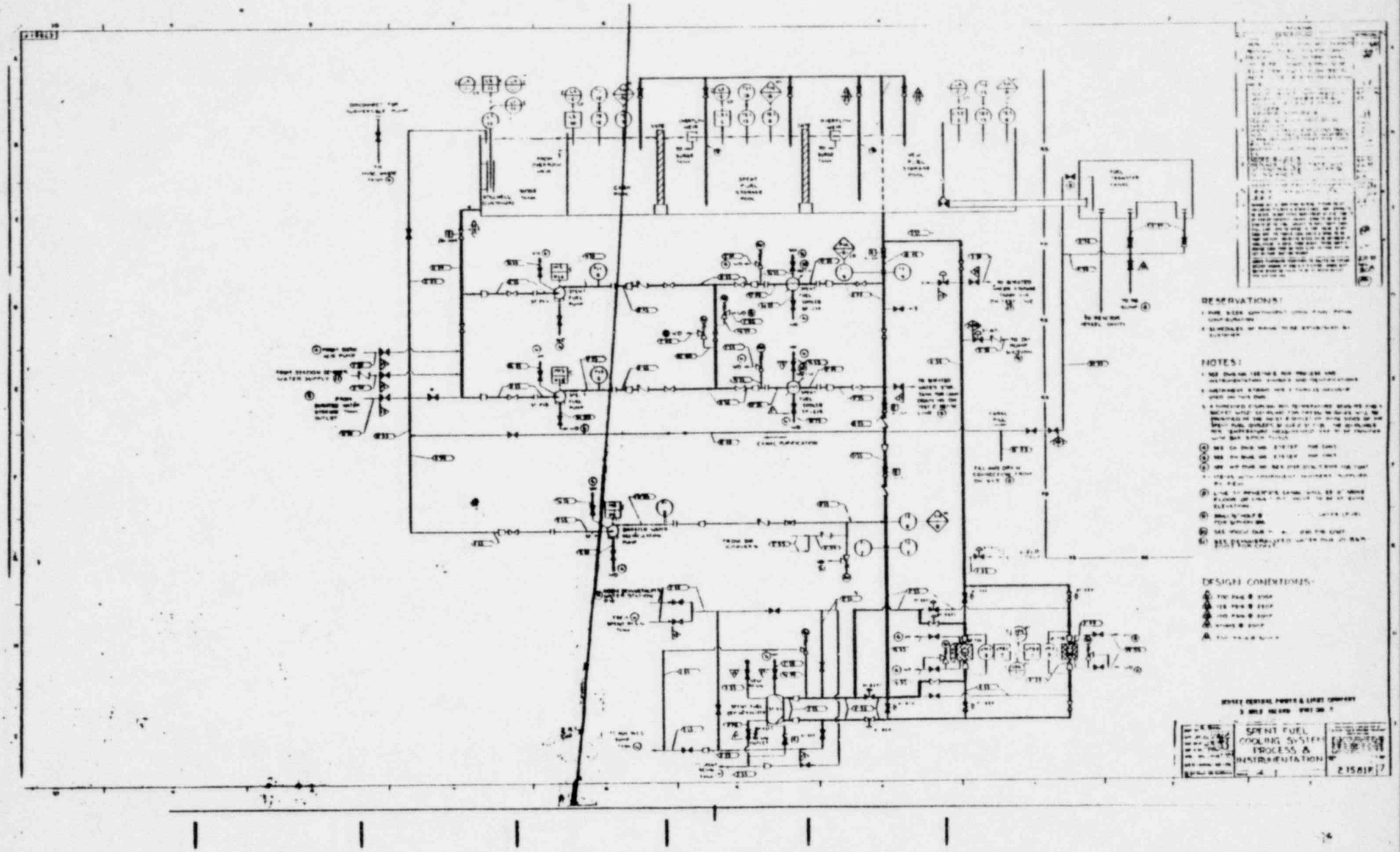
RESERVATIONS:
NOTES:
DESIGN CONDITIONS:
SPENT FUEL COOLING SYSTEM PROCESS & INSTRUMENTATION

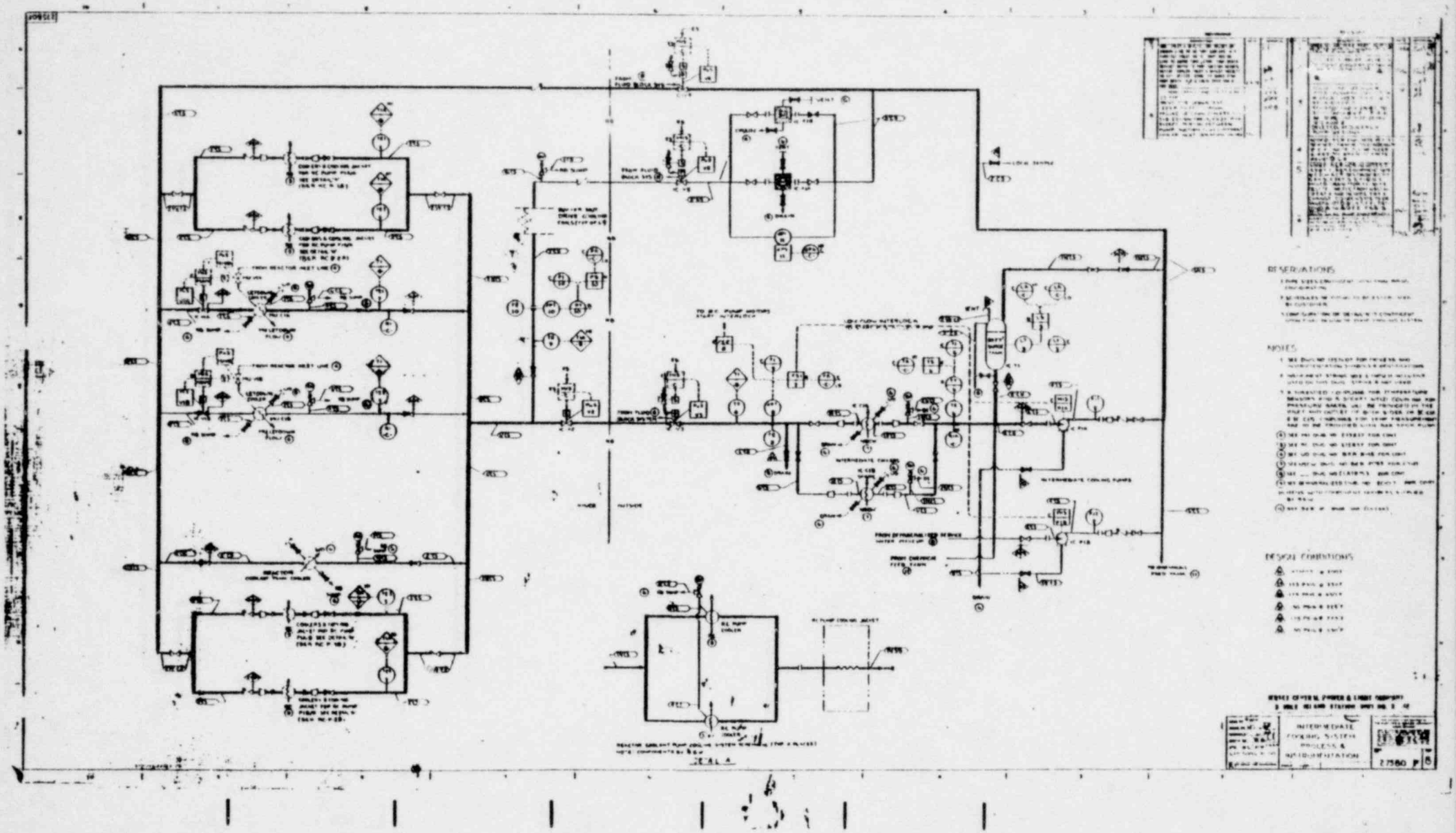
RESERVATIONS
NOTES
DESIGN CONDITIONS
INTERMEDIATE COOLING SYSTEM PROCESS & INSTRUMENTATION
27560 P

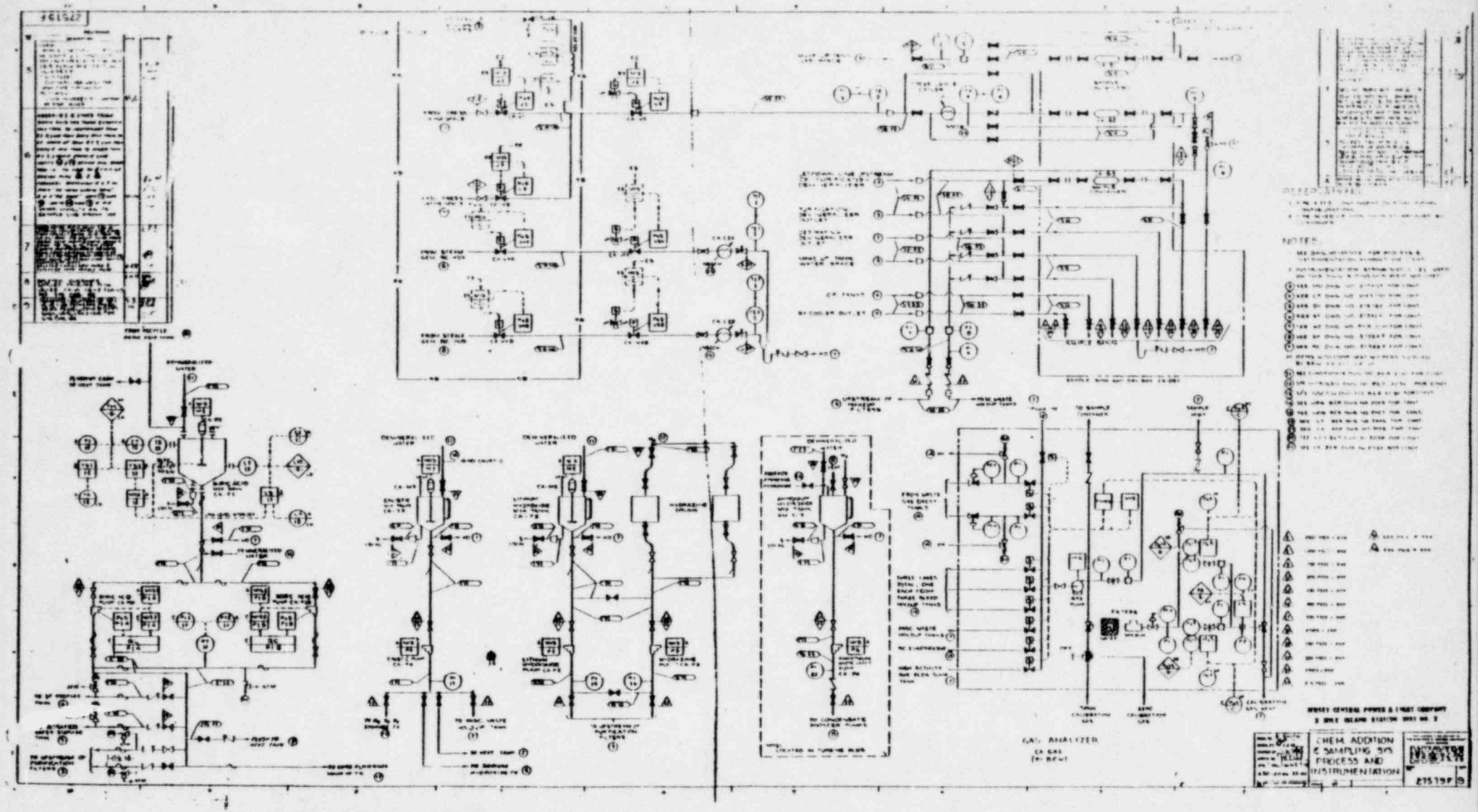
NOTES
GAS ANALYZER
CHEM. ADDITION & SAMPLING SYS PROCESS AND INSTRUMENTATION

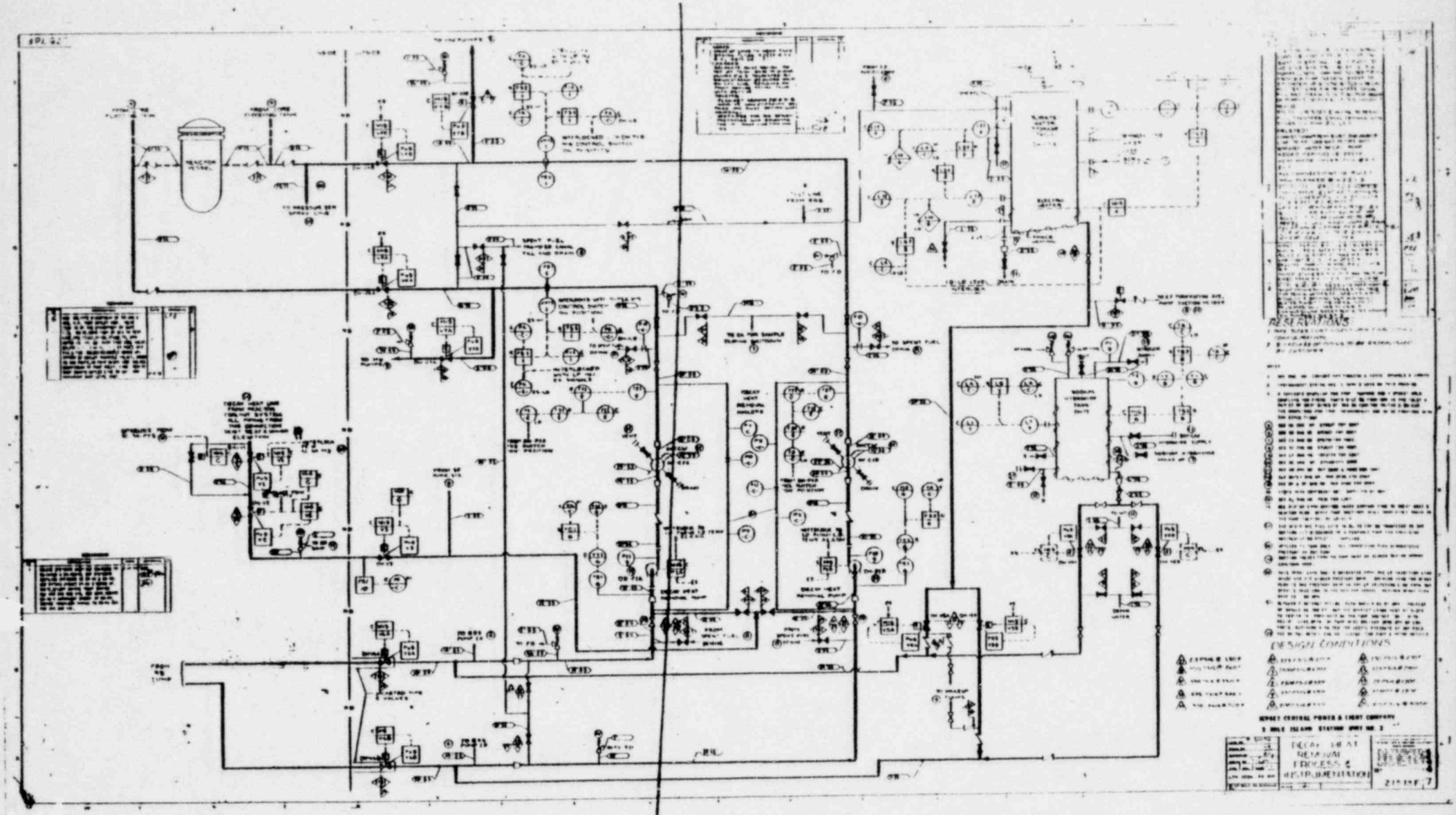
DESIGN CONDITIONS
DECAY HEAT REMOVAL PROCESS & INSTRUMENTATION

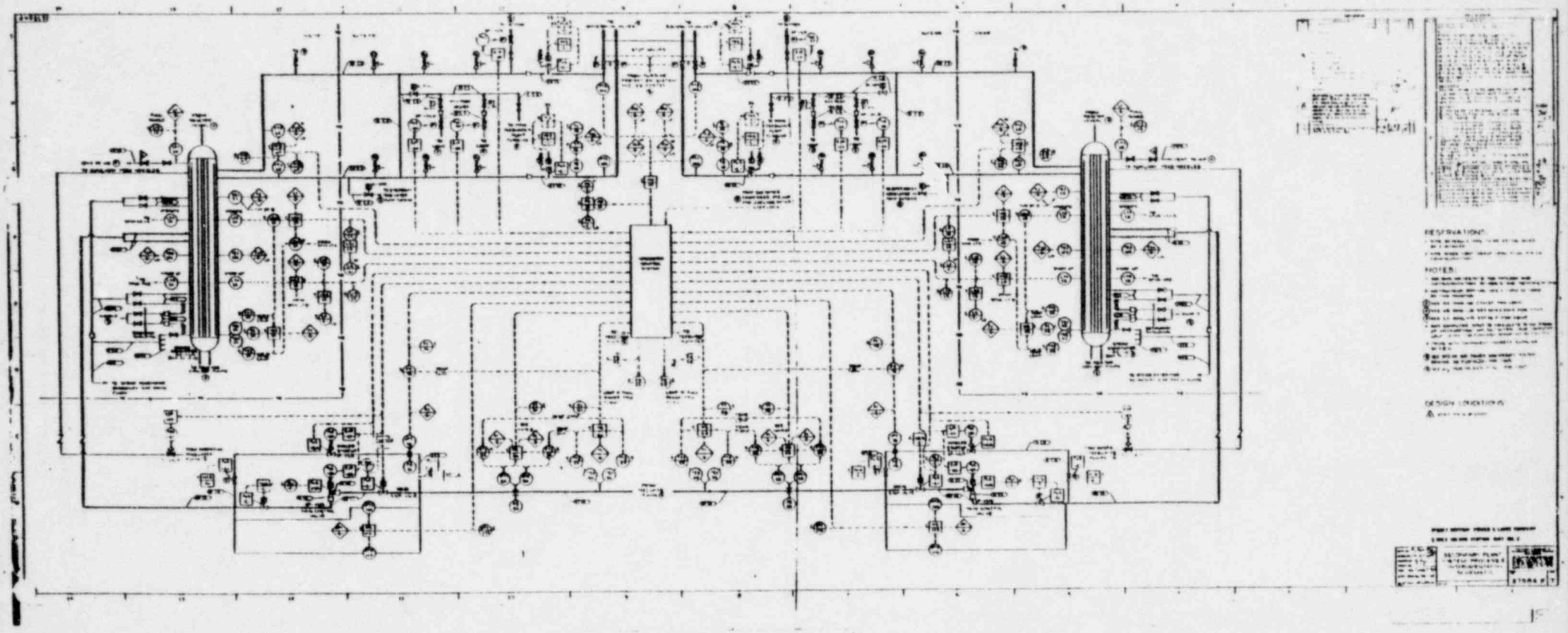

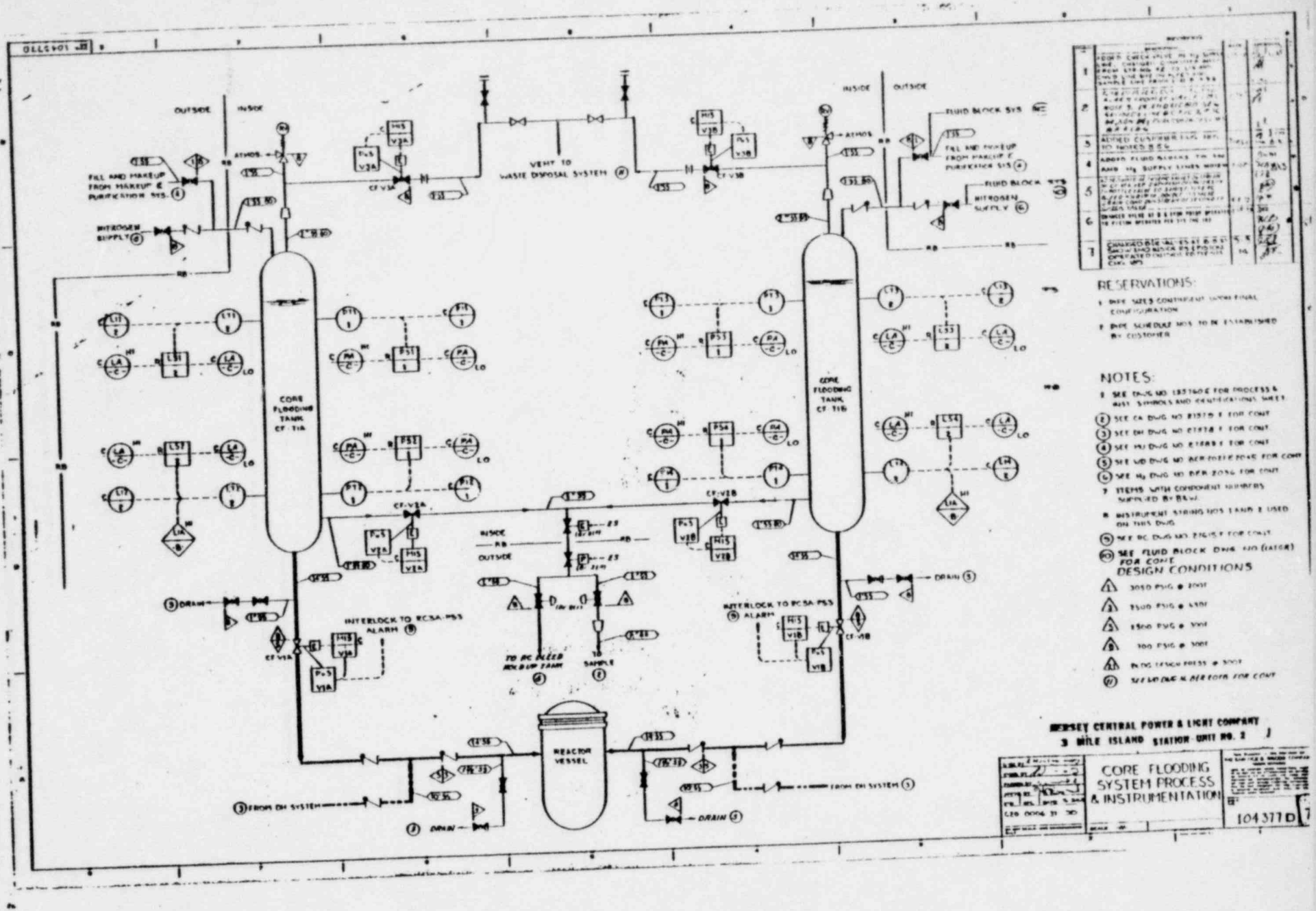

RESERVATIONS:

1. PIPE SIZES CONTINGENT UPON FINAL CONFIGURATION
2. PIPE SCHEDULE NOS. TO BE ESTABLISHED BY CUSTOMER

NOTES:

1. SEE DWG NO 1357606 FOR PROCESS & MISC SYMBOLS AND IDENTIFICATIONS SHEET
2. SEE CA DWG NO 215170 E FOR CONT
3. SEE DH DWG NO 215178 E FOR CONT
4. SEE HU DWG NO 215185 E FOR CONT
5. SEE WD DWG NO 2E6-0201E2046 FOR CONT
6. SEE H_2 DWG NO 2E6-2036 FOR CONT
7. ITEMS WITH COMPONENT NUMBERS SUPPLIED BY B&W
8. INSTRUMENT STRING NOS 1 AND 2 USED ON THIS DWG
9. SEE RC DWG NO 215157 E FOR CONT
10. SEE FLUID BLOCK DWG 420 (LATER) FOR CONT

DESIGN CONDITIONS

1. 2050 PSIG @ 200F
2. 2500 PSIG @ 650F
3. 1500 PSIG @ 300F
4. 300 PSIG @ 300F
5. IN DG TANK PRESS @ 300F
6. SEE WD DWG 2E6-0201E2046 FOR CONT

JERSEY CENTRAL POWER & LIGHT COMPANY
3 MILE ISLAND STATION UNIT NO. 2

CORE FLOODING SYSTEM PROCESS & INSTRUMENTATION

104377D

ENCLOSURE I

Category IV CRO Study Assignment Sheet

Cycle 4-1

Name:_____ Start Date:_____

Completion Date:_____

1. Read the following procedures:

   a) 2104-2.3, Instrument Air
   b) 2104-2.10, Service Air
   c) 2202-2.3, Loss of Instrument Air

2. Complete the Air Systems Questionnaire.

3. Read the following procedures:

   a) 2104-1.6, Intermediate Cooling
   b) 2202-1.9, Loss of Intermediate Cooling

4. Complete the Intermediate Cooling Questionnaire.

5. Read the following procedures:

   a) 2103-1.1, RCS Fill and Vent
   b) 2103-1.3, Pressurizer Operation
   c) 2202-1.5, Pressurizer Failure

6. Complete the RCS Questionnaire.

7. Read the following procedures:

   a) 2103-1.4, RCS Operation
   b) 2202-1.4, Loss of RC Flow
   c) 2203-1.4, RCP Motor Emergencies

8. Complete RCP Questionnaire.

9. Read the following procedures:

   a) 2203-1.8, Loose Parts Monitoring
   b) 2202-3.2, Flood
   c) 2202-3.3, Earthquake
   d) 2104-1.8, Environmental Barrier System

10. Read Section 4 of STS.

11. Read first half of Section 6 of STS.

TOTAL POINTS TO DATE FROM ENCLOSURE 2 _____

WRITTEN TEST DATE _____ RESULTS _____

ORAL TEST DATE _____ _____ RESULTS _____

ANSWERS MISSED, HANDED IN CORRECTED _____

_____ / _____

SIGNATURE OF LICENSED TRAINING COORDINATOR DATE

REFERENCES FOR QUESTIONNAIRES

Ref. #	Title
1	1A/SA Handout
2	OP 2104-2.3, IA
3	ICCW System Handout
4	OP 2104-1.6, ICCW
5	EP 2202-1.9, Loss of ICCW
6	RCP Handout
7	OP 2103-1.4, RCP Operation
8	NSS Vol. I
9	Standard Tech. Specs.
10	OP 2103-1.3, Pressurizer Operation

AIR SYSTEMS QUESTIONNAIRE

Cycle 4-1

1. What are the power supplies to the Service and Instrument air compressors? (Ref. #1)

2. Explain the operation of the IA compressors in each of the possible "local" and "remote" switch combinations. (Ref. #2)

3. What are the possible sources of cooling water available for the IA compressors? When is each used? (Ref. #1)

4. Are the IA and SA systems normally cross connected? Explain. (Ref. #2)

5. Under normal operating conditions, how will a substantial rupture in the SA system affect the IA system? Outline the immediate automatic and manual actions required for this problem.

INTERMEDIATE COOLING SYSTEM QUESTIONNAIRE

4-1

1. When must the ICCW System be in operation? (Ref. #4)

2. For normal operation, how many IC-P's and coolers are used? When must we place additional components on the line? (Ref. #4)

3. What is the minimum allowable IC flow to the CRDM'S? Where is it indicated? What could cause low flow in the CRD cooling lines? (Ref. #4)

4. Concerning the ICCW surge tank (IC-T-1):

   a) Where is it located?
   b) What are it's functions?
   c) What alarms are associated with it? (Include Setpoints)
   d) How is level maintained? (Ref. #3, #4)

5. Concerning the ICCW pumps:

   a) What are their power supplies?
   b) What will cause the standby pump to start?
   c) What is the minimum and maximum continuous flow for each pump? (Ref. #4)

6. How does the 1600 psig SFAS actuation signal affect the ICCW system? And the 4 psig RB pressure signal? (Ref. #3)

7. List the symptoms of a loss of ICCW. Assuming we cannot restore ICCW, what precautions must be observe to continue operation? When must we trip the reactor? (Ref. #5)

REACTOR COOLANT SYSTEM AND REACTOR VESSEL INTERNALS QUESTIONNAIRE

UNIT II

1. Draw the Reactor Coolant System showing valves, interconnections and instrumentation. Include the pressurizer and drain tank. (Ref. #8)

2. a) Draw the reactor vessel, label and include the following: (Ref. #8)

    1. Internal vent valve
    2. Control rod guide tube
    3. Core support shield
    4. Inlet nozzle
    5. Outlet nozzle
    6. One fuel assembly
    7. Thermal shield
    8. Flow distributors
    9. Incore instrument nozzles
    10. Guide lugs
    11. Lower grid
    12. Surveillance specimen holder tube
    13. Plenum assembly
    14. Control rod assembly
    15. Core flood nozzle

    b) Use a colored pencil to show normal and bypass flow.

3. What is the purpose of the internal vent valves? (Ref. #8)

4. What is the purpose of the core guide lugs? (Ref. #8)

5. List the pressurizer heaters power supplies. (Ref. #10)

6. a) What is the maximum pressurizer heatup and cooldown rate? (Ref. #10)

    b) Briefly explain the reason for this limit.

7. Explain how the pressurizer responds to control system pressure during a: (Ref. #10)

    a) Step load increase
    b) Step load decrease

    NOTE: Include heater and spray valve setpoints.

8. a) Explain what is meant by: (Ref. #8)

    1. Net positive suction heat (NPSH)
    2. Nil Ductility Transition Temperature (NDTT)

    b) Explain what happens if the limits for the following are violated: (Ref. #9)

    1. NPSH
    2. NDTT

9. a) How many orifice rods are in the core?

   b) Whay are orifice rods used?

   c) Briefly describe orifice rod construction.

10. a) How many lump burnable poison rod (LBPR) assemblies are used in the first cycle?

    b) What is the purpose of LBPR assemblies?

    c) Briefly describe LBPR construction.

11. a) How many control rod assemblies are in the core?

    b) How many axial power shaping rod assemblies are in the core?

    c) Briefly describe the construction of:

       1. Control rod assemblies
       2. APSR assemblies

       NOTE: Include percent composition of poisons and purpose of poisons.

12. a) Describe the construction of a control rod drive mechanism (CRDM).

    b) Briefly describe the operation of a CRDM.

13. a) List the conditions which require CRDM venting.

    b) Briefly explain why venting is required.

14. a) What is the maximum delta T between the pressurizer and the hot leg (Th)?

    b) Why is this limit imposed? (Ref. #10)

15. a) What is the maximum delta T between the pressurizer and the cold leg (Tc)?

    b) What is the purpose of this limit? (Ref. #10)

16. a) List all pressurizer level alarms and interlocks. (Ref. #10)

    b) What is the normal operating level?

       1. $<$15% power
       2. $>$15% power

    c) Explain why there is a minimum pressurizer level at power. Include setpoint.

17. What is the purpose of the spray bypass flow? Include value of bypass flow. (Ref. #10)

18. What is the maximum pressurizer level when the reactor is critical? Explain (Ref. #10)

19. What is the approximate pressurizer volume? (Ref. #10)

20. a) What is meant by the term "Hard Bubble"? (Ref. #10)

    b) At what point during plant shutdown - cooldown should degassification be performed?

    c) Briefly describe how pressurizer hard bubble degassification is accomplished. Include a sketch of the flow path.

21. a) List the conditions which must be met to reduce RCS boron concentration.

    b) Explain the purpose for these limits.

22. a) What is the maximum difference between pressurizer boron concentration and RCS boron concentration? (Ref. #10)

    b) What is the recommended difference in boron concentration?

    c) What problems are associated with a large boron differential?

23. a) Sketch the heatup and cooldown corves shown in Technical Specifications. (Ref. #9) Include point values.

    b) Explain the shape of the curves.

24. List the limits on Reactor Coolant System leakage. Include required actions if limit is exceeded.

25. a) How often is a Reactor Coolant System Leakrate calculation required?

    b) List the leak detection systems which must be oeprable in the Reactor Building, when at power. Include any exceptions.

    c) List all the systems available to detect RCS leakage into the Reactor Building. Include sensitivity.

26. a) What is the limit on activity in the RCS for critical operation?

    b) Discuss the basis for this requirement.

    c) Define $\overline{E}$. Include value per Technical Specifications.

REACTOR COOLANT PUMPS QUESTIONNAIRE

1. a) Draw a basic sketch of a Reactor Coolant Pump. Include and label the following: (Ref. #6)

   1. All seals
   2. Seal leakage
   3. Seal injection
   4. Pump bearing
   5. Thermal barrier
   6. Impeller
   7. Intermediate Cooling
   8. Recirc. Impeller

   b) Use a colored pencil to show seal water flow during:

   1. Normal operation
   2. Loss of injection operation

   NOTE: Include approximate flow value through all seals from all sources.

2. What is the purpose of the thermal barrier? (Ref. #6)

3. List the power supplies for: (Ref. #7)

   a) Reactor Coolant Pumps
   b) Reactor Coolant Pump Oil Pumps

4. Briefly describe the operation of the reactor coolant pump oil systems. Include the purpose of each system. (Ref. #6)

5. What system is used to cool the RCP motor? (Ref. #7)

6. Provide the following information: (Ref. #6)

   a) Flow per pump
   b) RCP required NPSH

7. List the conditions (interlocks) which must be met to start a Reactor Coolant Pump. (Ref. #7)

8. List the conditions which will cause an Automatic Reactor Coolant Pump Trip. (Ref. #7)

9. List the conditions which require manual RCP Trip. (Ref. #7)

10. a) What D.P. is maintained across each seal? (Ref. #6, #7)

    b) How is this D.P. maintained?

    c) Why is this D.P. maintained?

11. What is the purpose of the flywheel on a Reactor Coolant Pump motor? (Ref. #6)

12. a) List the symptoms for failed seals. Include applicable setpoints. (Ref. #6, #7)

    b) List the required operator responses for failed seals.

13. a) What is the maximum power at which a Reactor Coolant Pump may be started? (Ref. #7)

    b) Explain why this limit is imposed.

14. a) How is Reactor Coolant Pump vibration detected? (Ref. #7)

    b) List the RCP vibration limits and required actions when the limits are exceeded.

15. a) What temperature restriction is placed on starting the fourth reactor coolant pump? (Ref. #6, #7)

    b) Explain the purpose of this restriction.

    c) Describe how this temperature interlock signal is developed.

16. List and discuss the restrictions on all possible Reactor Coolant Pump combinations. (Ref. #7)

17. What is the purpose of the Reactor Coolant Pump "Recirc. Impeller"? (Ref. #6)

18. Explain the purpose of the Reactor Coolant Pump Leakage detection system (Dipping Bird). Include setpoints. (Ref. #6, #7).

INSTRUMENT AND SERVICE AIR

UNIT II

INSTRUMENT AND SERVICE AIR SYSTEMS

I. OBJECTIVES

A. To know the purpose of the Instrument and Service Air Systems.

B. To be able to draw a simple sketch of the systems.

C. To know the value of the major operating parameters.

D. To be able to trace the system out in the plant.

E. To be able to discuss the operation of the system including interlocks and applicable Tech Specs.

II. PURPOSE

A. Supply dried, oil free Instrument Air to applicable equipment in the plant.

B. Supply oil free Service Air to stations throughout the plant.

III. GENERAL SYSTEM DESCRIPTION

A. Combined Operation

1. Instrument and Service Air

B. Five Compressors

1. Two (2) Instrument Air

2. Three (3) Service Air

3. Tie valves

a. SA-V-362, SA-V-356, SA-V-357, SA-V-358 all open.

C. Instrument Air

1. After Cooler

2. Prefilter

3. Dryer

4. After Filter

D. Service Air

1. After Cooler

E. Back up

1. To or from Unit I

2. From Aux. Air Compressor

3. To or from Instrument or Service Air

F. Cooling

1. Instrument Air

a. Compressor and After Cooler

1. Nuclear Services Closed Cooling

2. Service Air

a. Compressor and After Cooler

1. Secondary Services Closed Cooling

G. System Pressure

1. Instrument Air

a. 110 psig at 121 SCFM

2. Service Air

a. 115 psig at 209.5 SCFM

IV. OPERATIONAL DESCRIPTION

A. Instrument Air Operation

1. Control Room switch in "Auto"-"Off"-"Manual"

a. Master control, overrides local switch when in Off, only difference between Auto and Manual is amber light in CR when in Auto.

2. Local switch

a. "Constant Speed" compressor loads and unloads per pressure

b. "Auto" on local compressor starts/load, stops/unloads per pressure.

3. NSSCW Valves

   a. open when compressor/motor called to run

   b. NSV 217 A/B, NSV 218 A/B, NSV 137 A/B

   c. NSV 138 A/B throttles to maintain 100-120°F on outlet of compressor jacket.

4. Time delay on start defeats interlock

   a. Low oil pressure

5. Manual loading

   a. Bleed pressure on unloading valve

6. Instrument air dryer

   a. Eight hour cycles

      1. switches and regenerates every 4 hours

   b. Low moisture indicator on outlet

      1. Blue;air dried

      2. Pink;air wet

7. Power supplies

   a. IAP1A MCC 2-12E

   b. IAP1B MCC 2-22E

   c. IAQ1 MCC 2-12E Backup MCC 2-22E

B. Service Air Operation

1. Local control

   a. "Constant Speed" motor runs compressor load and unloads

   b. "Auto" mode compressor run/load, unload/stop

3. SSCCW valves

   a. SC-V-74 A/B opens

   b. SC-V-75 A/B throttle control outlet temp. to 100-120°F

4. System valves

   1. AH-V-72 RB Isol. with SFAS signal (IA to air dampers)

   2. SA-V-358 Service Air Header Isolation

      a. Instrument and Service Air Compressor feed cutoff to Service Air header

5. Power Supplies

   1. SA-P-1A MCC 2-31A

   2. SA-P-1B MCC 2-41A

   3. SA-P-1C MCC 2-31B

C. Combined Operation

1. Combination of compressors will be dictated by system load requirements

   a. Remainder in auto

   b. Refer to Appendix "A" for compressor pressure interlocks

D. Auxiliary Air Supply System

1. Small compressor

   a. two stage

2. Refrigerate air dryer

3. Receiver

4. Uses

   a. Backup instrumentation

   b. Mixed bed regeneration backup

   c. L.A. Water treatment backup

5. Power

   a. MCC 2-31D

REMOVED FROM OPERATION

APPENDIX A

INTERLOCKS AND SET POINTS

1. INSTRUMENT AIR COMPRESSOR

START

1. Opens NS-V-217 A/B, NS-V-218 A/B NS-V-137 A/B
2. NS-V-138 A/B throttles for 100-120°F on outlet of compressor jacket alarms at 155°F.

TRIP

1. High NSCCW Flow (8 gpm)
2. High Air Temp. (475°F)
3. High Air Pressure (125#)
4. Low Oil Pressure (15 psig)

2. SERVICE AIR COMPRESSOR

START

1. Open SCV-74 A/B/C
2. SC-V-75 A/B/C throttles flow to maintain 100-120°F on outlet of compressor jacket, alarms at 155°F
3. Relief Valves set at 125 psig
4. Set Points (psig)

TRIP

1. High Air Temp (475°F)
2. High Air Pressure (125#)
3. Low Oil Pressure (15#)

CONSTANT SPEED			AUTO	
Compressor	Load	Unload	Start/Load	Stop/Unload
IAP1A	100	110	90	100
IAP1B	100	110	90	100
SCP1A	100	110	90	100
SCP1B	100	110	90	100
SCP1C	100	110	90	100

5. Pressure alarms (Psig)

Low Pressure	85
High Pressure	120

6. Auto close (Psig)
   SAV358 (70)

7. SA-V-356, 357, 358 and 362 are normal open valves.

APPENDIX B AND C

MAJOR COMPONENTS AND DESIGN PARAMETERS

1. Instrument Air Compressors (2)
   a. 121 SCFM at 115 psig
   b. Dry cylinder forced oil lubrication
   c. Water cooled (NSCCW)
2. Service Air Compressors (3)
   a. 209.5 SCFM at 115 psig
   b. Dry cylinder forced oil lubrication
   c. Water cooled (SSCCW)
3. After coolers (5)
   a. 2 Instr. air with condensate traps.
   b. 3 Service air with condensate traps.
4. Air Receivers (7)
   a. Instr. air (2) with traps 57 cu. ft.
   b. Service air (3) with traps 96 cu.ft.
   c. Service air (2) for LAWT 235 cu. ft. with traps
5. Aux. Air Compressor
6. Instrument Air Dryer
   a. 505 SCFM capacity
      1. 25 SCFM purge
      2. 480 SCFM out
   b. Local control
   c. Pre and post filter

APPENDIX D

TECH SPECS

None

TYPICAL SERVICE AIR COMP. COOLING.

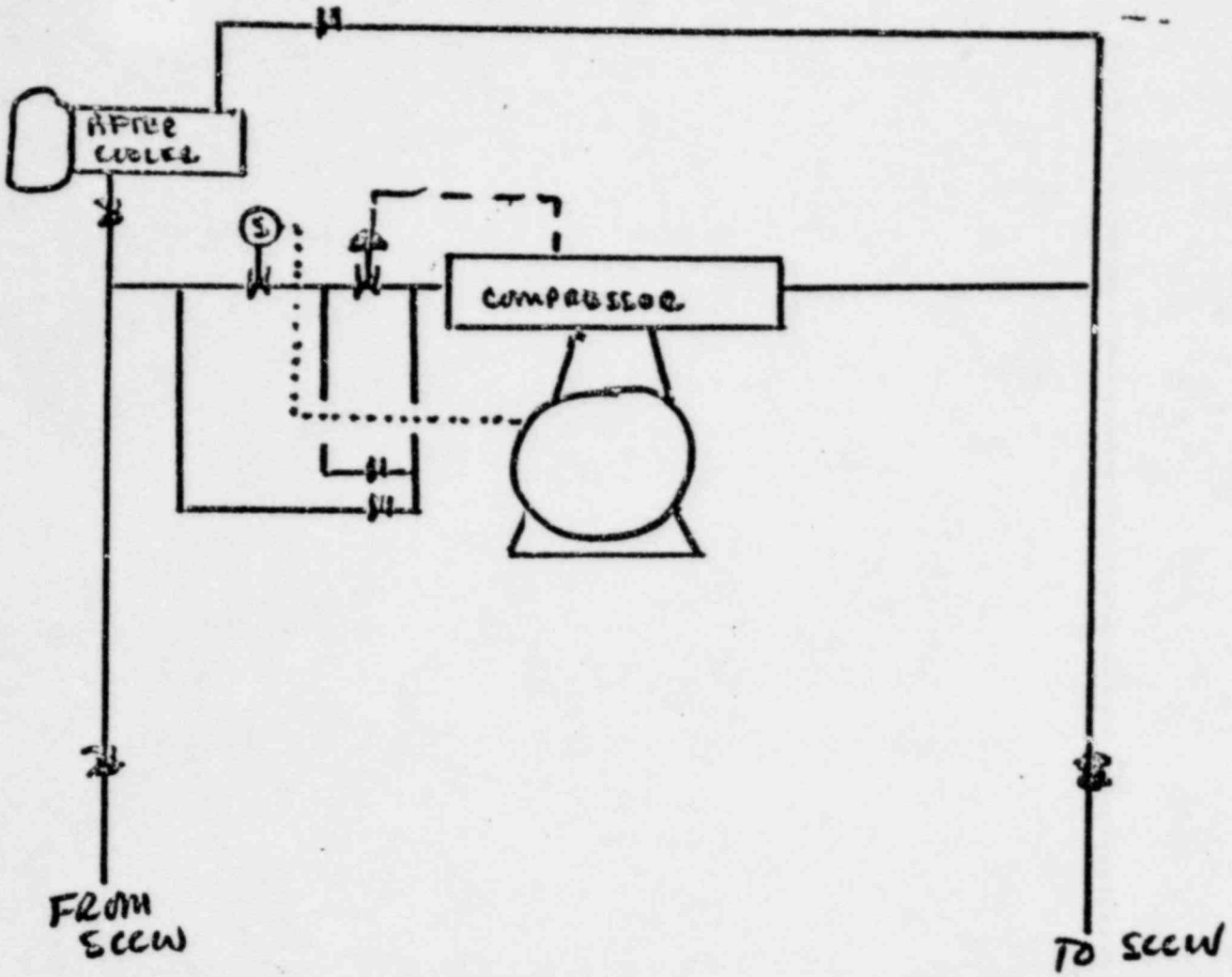

TYPICAL IA COOLING ARRANGEMENT

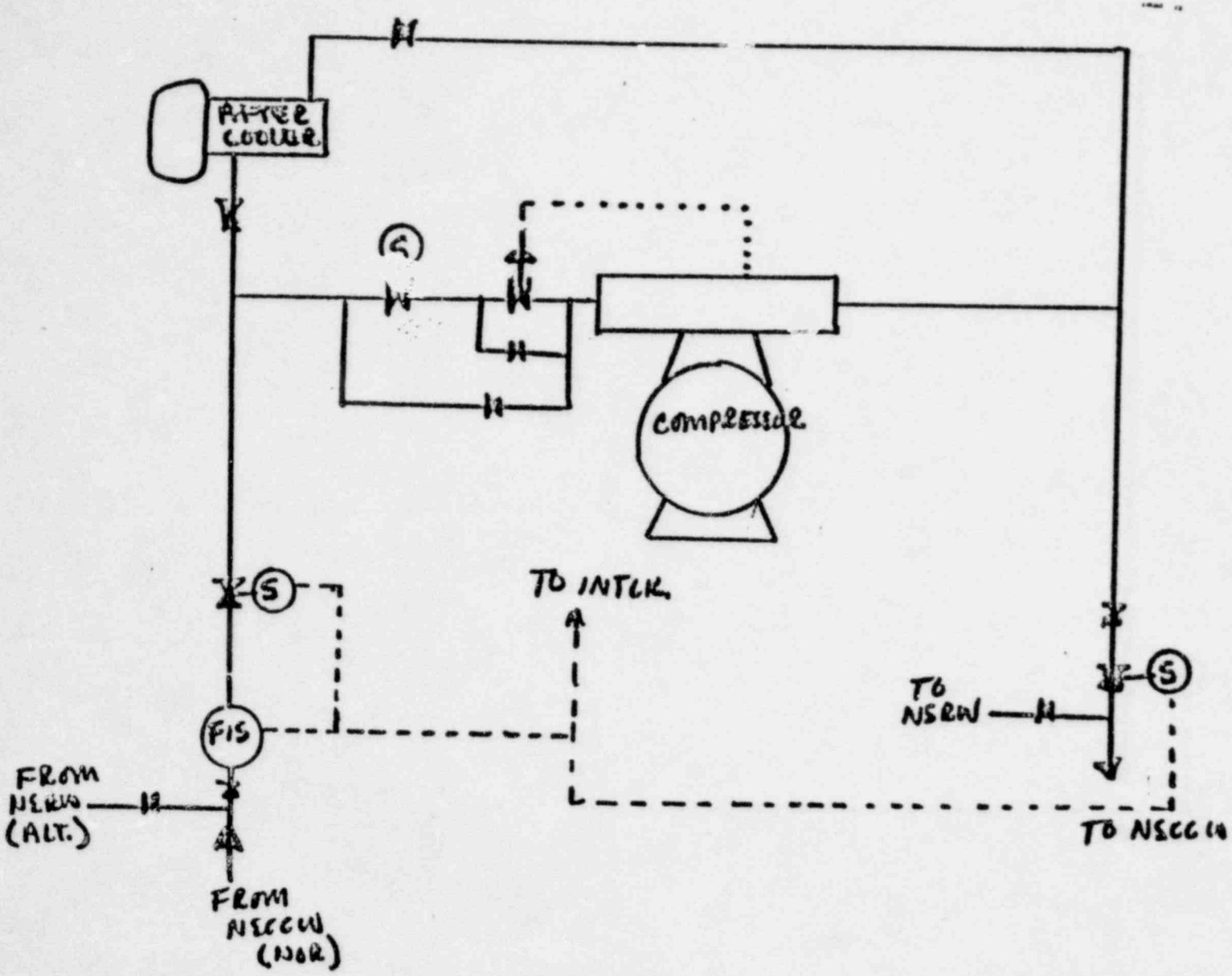

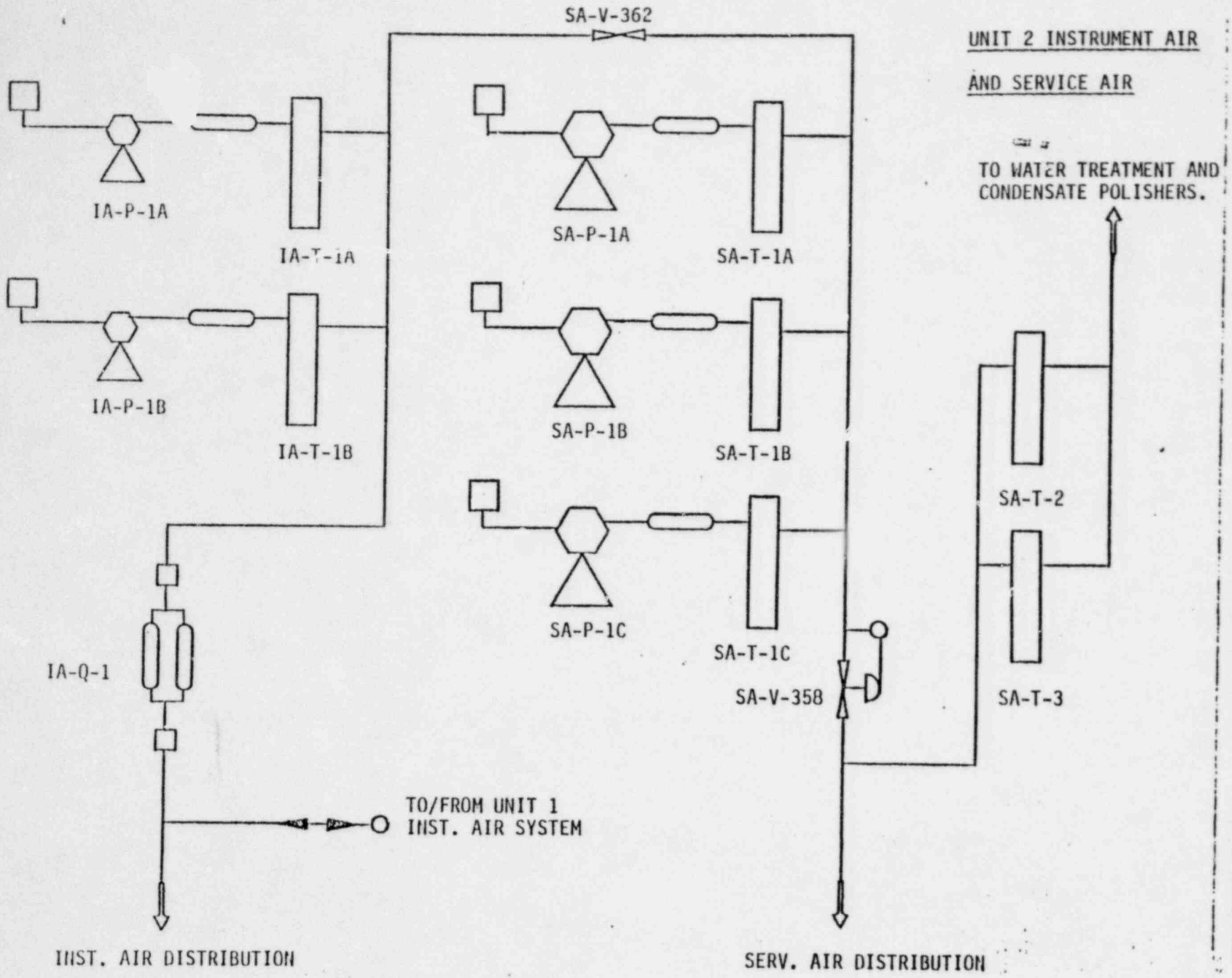
UNIT 2 INSTRUMENT AIR
AND SERVICE AIR
SA-V-362
IA-P-1A
IA-T-1A
IA-P-1B
IA-T-1B
SA-P-1A
SA-T-1A
SA-P-1B
SA-T-1B
SA-P-1C
SA-T-1C
SA-V-358
TO WATER TREATMENT AND
CONDENSATE POLISHERS.
SA-T-2
SA-T-3
IA-Q-1
TO/FROM UNIT 1
INST. AIR SYSTEM
INST. AIR DISTRIBUTION
SERV. AIR DISTRIBUTION

TMI-2 RC PUMP PRESENTATION

1-1 PURPOSE

The RC Pumps circulate the water for removing heat from the reactor core. They circulate the reactor coolant through the reactor vessel to the "Once Through Steam Generator" (OTSG) for heat removal, and return the coolant to the reactor vessel.

1-2 LOCATION

There are four RC Pumps, two in each reactor coolant loop; both pumps receive flow from a common OTSG, but furnish their discharge flow to the reactor vessel via two independent paths as shown on the RC System Arrangement figure.

1-3 RATING

The RC Pumps are rated at a capacity of 92,400 gpm at a normal pump operating temperature (554° F) and pressure (2150 psig pump suction). The RC Pump Drive Motors have a nominal 9000 HP rating. The combined motor/pump minimum moment of inertia of 70,000 lb-ft^2 is designed to assure an adequate flow coastdown time for core protection against DNB following a pump trip.

1-4 GENERAL DESCRIPTION

The Bingham 28X28X41 Type RQV Reactor Recirculation Pump is a single-suction single-stage, quad-volute, motor-driven pump. The pump drive motor is mounted on a motor stand above the pump. Motor torque is transmitted to the pump impeller by a vertically mounted pump shaft, that is connected to the motor shaft by a rigid coupling. Field alignment of the motor to the motor stand assures correct positioning of the motor shaft relative to the position of the pump assembly and bearings. The pump suction nozzle is at the bottom of the pump casing, and the discharge nozzle is at the side in the horizontal plane. Pump internal cooling and lubrication are accomplished using injection water.

1-5 VOLUTE CASE AND STUFFING BOX

The volute (pump) case is welded to the recirculation piping of the reactor. A stuffing box is attached to the pump case with 20 case studs and nuts. The upper shaft components are installed in the stuffing box which contains a cooling jacket and inlet and outlet connection points for the cooling and seal-staging water systems. The thermal barrier assembly in the stuffing box and the pump case are fitted with renewable case rings at points where the impeller runs with close clearance to the stationary casing.

1-6 IMPELLER

The impeller is mounted to the pump shaft and is retained by the impeller nut and a capscrew. A series of holes through the back impeller shroud inside the back case ring communicate pump suction pressure to the back side of the impeller.

1-7 THERMAL BARRIER AND RESTRICTION BUSHING

The thermal barrier, bolted to the stuffing box above the impeller, retards the flow of heat from the hot pumpage to the bearing and three-stage seal chambers above. The bore of the thermal barrier houses a restriction bushing that retards flow of fluid between the hot pump casing and the cooled seal and bearing chambers.

1-8 PUMP AND BEARING

The pump bearing provides support for the pump shaft. The bearing consists of a spherically mounted pump bearing cartridge assembly installed in a bearing housing.

1-9 LABYRINTH PUMP

The labyrinth pump, consisting of a rotor mounted on the shaft above the bearing cartridge assembly and a stator mounted in the stuffing box, circulates fluid within the chamber containing the pump bearing and seals, out to a heat exchanger and back into the chamber adjacent to the lower seal face.

1-10 THREE-STAGE SEAL

A three-stage seal comprising upper, middle and lower seal assemblies mounts above the labyrinth pump. The upper and middle/lower seal assemblies are designed to be removed as assembled cartridges, with the glands and sleeves, without distrubing the main casing bolting. An upper seal sleeve nut and shaft nut are provided for proper positioning and setting of the seal assembly. A lock washer prevents loosening of these nuts.

1-11 SEAL LEAKAGE CHAMBER

A seal leakage chamber above the three-stage seal collects leakage from the upper seal and pipes it to a sump through a seal leakage alarm. The chamber is sealed against gross outleakage to atmosphere by the floating throttle assembly, which is mounted in the seal leakage cover and runs with close clearance on the upper seal assembly shaft sleeve. The floating throttle assembly operates as a spring-loaded floating throttle that moves laterally relative to the cover to prevent this part from carrying a bearing load.

1-12 MOTOR STAND AND MOTOR COUPLING

The pump shaft is attached to the motor shaft by a rigid spacer coupling. The motor shaft has an integral coupling flange. A thrust plug and disc transmit axial thrust from pump to motor. The length between shaft ends with the spacer removed allows ample room to remove the three-stage seals. The motor is supported on the motor stand, which is secured to the stuffing box.

THEORY OF OPERATION

1-13 PUMP COOLING AND SEALING SYSTEM

The pump cooling and sealing system comprises the three-stage seals, the recirculation pump, and external piping and heat exchanger, as shown schematically in Figure 1-1. These components prevent leakage of high pressure reactor fluid between the pump shaft and the pump housing, and cool the pump bearings and seals. The following paragraphs describe the function of a three-stage seal arrangement which allows operation with loss of either cooling or injection water.

1-14 NORMAL OPERATION

During normal operation, both the injection fluid and the cooling water systems are functioning (see Figure 1-1A). 6 to 16 gpm of injection fluid is introduced to the circulation system so that it enters the pump at the face of the lower seal and flows downward across the recirculation device and pump bearing. The injection flow divides at the injection point so that 1.1 gpm passes to the second and third seal chambers to set the inter seal pressure and 5 to 15 gpm enters the pumped fluid. The flow of injection fluid to the pump is controlled by a flow control system furnished by the customer.

While running there is a circulation flow of approximately 35 gpm generated by the recirculation impeller through the lower seal chamber and external heat exchanger. The 6 to 16 gpm injection combines with the 35 gpm circulation flow to provide cooling and lubrication for the seals and bearing. This flow is recirculated through the inside tube to the "Tube-in-Tube" heat exchanger. Cooling water is circulated through the heat exchanger at 35 to 50 gpm. The optimum cooling water flow is 50 gpm and should be run at this rate if possible.

When the pump is idle the injection system provides the necessary cooling. The flow will divide when the pump is idle so that part enters at point H and part at point F.

1-16 The design allows operation with any two seals failed as the remaining seal is capable of holding system pressure. Expected staging flow rate is noted on Figure 1-1A for failure of the lower and middle seals. If all three seals fail, the leakage is indeterminate. The pump must be shut down and cooled if the sum of the seal leakage and the seal staging flow exceeds 1.0 gpm.

1-17 OPERATION WITH LOSS OF COOLING WATER

If cooling water to the heat exchangers stops, operation can continue with adequate cooling provided by the injection fluid flow alone. When the flow of cooling water is restored, it must be introduced gradually to avoid undue thermal stress and distortion in the pump cover. Lower and upper seal cavity temperatures (T2 and T4) should be monitored closely and if either alarms (185°F) the pump should be cooled down and the seals disassembled and inspected.

1-18 OPERATION WITH LOSS OF INJECTION FLOW

If injection fluid flow stops while the pump is running, operation can be continued in the mode shown on Figure 1-13, if the sum of the seal leakage and seal staging flow does not exceed 1.9 gpm, the cooling water flow to the heat exchangers is 50 gpm, and temperature T2 does not exceed the alarm level of 185°F. Under these conditions, the seal staging fluid normally supplied by the injection fluid is supplied from the main pumpage through the restriction bushing. The hot pumpage mixes with the 35 gpm recirculation flow and is cooled in the heat exchanger, from whence it passes into the lower and middle seal chambers. The cooling jacket on the stuffing box and the heat exchanger combines to keep the temperature at the seals within limits. If it becomes necessary to stop the pump during a loss of injection fluid condition, the seal staging flow valve must be shut off before the pump speed drops below 600 rpm.

1-19 If both injection fluid flow and heat exchanger cooling water flow are lost while the pumped fluid temperature is greater than 200°F, the pump must be shut down immediately.

1-20 COOLING WATER CIRCUIT

The cooling water circuit receives cooling water from the reactor building closed cooling system, and supplies the cooling water (via a cooling water manifold) to the cooling jacket and the heat exchangers.

1-21 VENTING CIRCUIT

The system is self-venting from Nozzle "A" (Seal Return connection). The pipe from Nozzle "A" must be installed in a manner to avoid air traps.

1-22 GASKET LEAKAGE CONNECTION CIRCUIT

A method is provided to monitor leakage of pumped fluid past the inner gasket of the double-gasketed pipe nipple welded to the pump case which connects to the cavity between the inner and outer gaskets. This connection can be used to monitor leakage of the inner gasket.

1-23 SEAL LEAKAGE ALARM DEVICE

a. The seal leakage alarm device consists of a special tank into which is mounted a B/W Controller Corporation electrode holder and corrosion resistant electrode which operates in conjunction with a B/W Controller Corporation Type 52-1201 high sensitivity relay.

b. When the upper seal leakage rate reaches a level of 0.39 gpm flowing into the central tube of the seal leakage tank, the level in the tube will reach the level of the electrode, thereby completing the circuit to activate the alarm in the control room.

c. Should the seal leakage rate exceed 0.39 gpm, the excess flows over the top of the internal pipe and out the drain. During this condition, the alarm would be activated.

1-24 HEAT EXCHANGERS

The cooling water side of the heat exchanger return is provided with an ASME Code Section VIII pressure relief valve having a capacity of 26,000 pounds per hour of 33% wet steam with a maximum back pressure of 10 psig. The valve is set to relieve at 100-110 psig.

INSTALLATION

3-1 SUB-ASSEMBLIES

The pump is shipped partially disassembled. The pump case is installed into the reactor system prior to assembly of the elements into the case. The following items and assemblies are preassembled at the factory:

a. Seal assemblies.

b. The bearing cartridge/bearing housing assembly.

c. Floating throttle assembly.

d. Thermal barrier/hub side case wear ring assembly.

e. Stuffing box (including labyrinth pump stator and retaining ring, keys and pins)/motor stand/heat exchanger/interconnecting piping assembly.

f. Suction piece adapter/seal ring assembly.

g. Shaft/labyrinth pump rotor, rotor nut and key/lower seal sleeve and restriction bushing keys assembly.

3-2 INSTALLATION SEQUENCE

a. Support the stuffing box/motor stand/heat exchanger assembly to permit access from above and below.

b. Install the shaft assembly in the stuffing box from above.

c. Install the bearing assembly in the stuffing box from below.

d. Install the restriction bushing sleeve on the shaft from below.

e. Install the thermal barrier/hub side case wear ring over the shaft and attach to the stuffing box from below.

f. Install the impeller on the shaft from below.

g. Install the suction piece adapter and impeller eyeside wear ring.

h. Install the stuffing box/motor stand/thermal barrier/shaft/impeller assembly on the casing.

i. Tension the stuffing box/motor stand-to-casing studs.

j. Install and align the RCP Motor on the top of the motor stand.

k. Install the seals in the bore of the stuffing box.

l. Install the seal leakage cover with floating throttle assembly on the top of the stuffing box.

m. Install the coupling/spacer assembly.

n. Adjust the seal sleeve for proper seal setting.

o. Connect external piping and instrument wiring.

PUMP OPERATION

4.1 GENERAL

This section provides information and instructions for operation of the pump for normal and abnormal operating modes. For information pertaining to motor operation, refer to the motor manufacturer's instruction manual.

4-2 INSTRUMENTATION

In order to monitor pump operation properly, the following instrumentation is required. Refer to Figure 4-1 for locations of sources of instrument signals. For temperature readings thermowells are provided and for pressure readings flanged pipe connections are provided. Read-out instruments, thermocouples, wiring and piping are furnished by others.

a. Temperatures: The following temperatures are required:

Designation	Description	Normal	Minimum	Maximum
T_1	Seal Recirculation Outlet	125°F	60°F	185°F
T_2	Lower Seal Chamber	120°F	60°F	185°F
T_4	Upper Seal Outlet	135°F	60°F	185°F

b. Pressures: The following pressure measurements are required:

Designation	Description	Normal	Minimum	Maximum
P_1	Injection Inlet Pressure	System Press.	240 psig	2500 psig
P_2	Middle Seal Cavity Pressure	2/3 System Press.	160 psig	2500 psig
P_3	Upper Seal Cavity Pressure	1/3 System Press.	80 psig	2500 psig

Description	Normal	Minimum	Maximum
Injection Flow to each Pump	11 gpm	6 gpm	16 gpm
Cooling Water Flow to Heat Exchanger and Stuffing Box Jacket	50 gpm	35 gpm	N.A.
Seal Staging Flow	1.1 gpm	0.8 gpm	1.9 gpm

d. Seal Leakage: Seal leakage out of the upper seal is to be monitored by an alarm device furnished by BWC and by a volumetric flow measuring instrument, furnished by others.

Normal Seal Leakage	0 to 0.08 gpm
Alarm Level Leakage	0.39 gpm
Notification Level Leakage	0.75 gpm
Maximum Leakage	Sum of outer seal leakage and seal staging flow in excess of 1.9 gpm

e. Vibrations: The following vibrations should be monitored:

Frame Vibration: Maximum 3 mils peak to peak

Shaft Vibration (2 Planes 90° apart).

With one pump operating on a steam generator:
30 mils maximum peak to peak for first 4 hours of operation

With one or two pumps operating on a steam generator:
26 mils maximum peak to peak

Normal (four pump operation hot):
Less than 20 mils peak to peak

4-3 PRESTART CHECK OUT

Before starting the pump, the following conditions must be met:

a. Check all instruments to be sure that they are functioning and are properly calibrated.

b. Fill Reactor Coolant System.

c. Initiate injection flow to all four pumps 30 minutes prior to starting a pump. Balance injection to the pumps so that each pump has approximately 11 gpm injection flow.

d. Open seal staging outlet valves on all four pumps. This must be done at least 15 minutes prior to pump startup to assure full venting of the seal cavities.

e. Initiate cooling water flow to the pump heat exchange system. Set flow at 50 gpm through the heat exchanger and the stuffing box jacket.

f. Pressurize Reactor Coolant System to 240 psig to assure adequate NPSH to the pump suction.

g. Refer to motor manufacturer's instruction manual for motor prestarting procedures.

4-4 STARTING PROCEDURE

a. Start motor in accordance with motor manufacturer's instructions.

b. Observe all instrument read-outs. All temperatures, pressures, flows and vibrations must be within the limits set forth is Subsection 4-2.

4-5 OPERATIONAL SURVEILLANCE

a. During pump operation, monitor the parameters in Subsection 4-2. If these parameters are not within the limits established and the condition causing the variation cannot be corrected, the pump must be shut down as soon as possible.

b. Seal Leakage: The seal leakage alarm is set for 0.39 gpm. When this alarm activates, the seal leakage should be monitored frequently to observe the trend. If the leakage reaches 0.75 gpm, the reactor manufacturer should be notified. If the seal leakage level reaches a rate where the sum of the seal leakage and the seal staging flow exceeds 1.9 gpm, the reactor must be cooled down and depressurized and the seal package replaced. Note: During pressure and temperature transients, such as will occur during heatup, cooldown and reactor load changes, seal leakage may increase. When the system is again stable, the seal leakage should return to its previous level.

4-6 SHUT DOWN - NORMAL CONDITONS

a. Shut off power to motor. Continue injection and cooling water flow to pump at the established rates.

b. Maintain injection and cooling water flow to pump until the Reactor Coolant System temperature is below 200°F and the pressure below 200 psig.

c. Pump may be restarted at any time if all instrumented parameters are within the established limits and all support systems are operational.

4-7 START UP - HOT SYSTEM

a. The pump start up procedure for a hot system is the same as for a cold system. Be sure all prestart conditions, as outlined in Subsection 4-3, are checked and that the instrumented parameters are within the limits of Subsection 4-2.

4-8 LOSS OF COOLING WATER

If the flow of cooling water to the pump is discontinued, the pump operation may continue if an injection flow of 6 to 10 gpm is maintained. The same limits on instrumented parameters apply as during normal operation.

4-9 PUMP SHUT DOWN - LOSS OF COOLING

a. Shut off power to motor. Continue injection flow at the established rate until the Reactor Coolant System temperature is below 200°F and the pressure is below 200 psig.

b. If it is required for reactor operation, the pump may be restarted if all conditions are within limits and all other systems operational. If possible, cooling water flow should be re-established before restart.

4.10 LOSS OF INJECTION

a. If injection flow to a pump is lost, the pump may continue to operate if cooling water flow is maintained within the established limits. This is considered an emergency condition. Injection flow should not be purposely stopped if the Reactor Coolant System is above 200°F and 200 psig.

b. During loss of injection, monitor seal cavity temperature (T_2) and seal leakage carefully. Seal leakage and temperature T_2 must not exceed the maximum limits given above.

c. Close the injection flow control valve to prevent high injection flow upon recovery of injection.

4.11 RECOVERY OF INJECTION

When injection fluid is available, re-establish injection flow as follows:

a. Open the injection flow control valve to establish a flow of 2 gpm per pump. Continue at this flow rate for a period of 10 minutes.

b. Increase injection flow to 5 gpm for a 10-minute period.

c. Increase injection flow to normal flow rate of about 11 gpm.

4.12 PUMP SHUT DOWN - LOSS OF INJECTION

NOTE: THE PUMP SHOULD NOT BE SHUT DOWN WHEN INJECTION FLOW IS LOST UNLESS IT IS ABSOLUTELY NECESSARY.

a. Shut off power to motor. The Seal Staging Outlet Valve should close when both injection flow and motor power are off. Confirm closure.

b. Continue flow of cooling water at full flow of 50 gpm until Reactor Coolant System temperature is less than 200° F and pressure is below 200 psig.

c. Do not restart pump until injection flow is available. Recover injection flow per Subsection 4-11.

4-13 SEALS

a. The pump may be operated with any of the three seals leaking. Leakage of the lower seal is indicated when the upper seal cavity pressure (P_3) is greater than one-third and the middle seal cavity pressure (P_2) is greater than two-thirds of the Reactor Coolant System pressure. Leakage of the middle seal is indicated when the upper seal cavity pressure (P_3) is greater than one-third and the middle seal cavity pressure (P_2) is less than two-thirds of the Reactor Coolant System pressure. Leakage of the upper seal is indicated when the upper seal cavity pressure (P_3) is less than one-third and the middle seal cavity pressure (P_2) is greater than two-thirds of the Reactor Coolant System pressure.

b. Limits for leakage of the outer seal are given in Subsection 4-5.

c. If lower and middle seal leakage is great enough to produce full Reactor Coolant System pressure in the upper seal cavity, and this condition persists, a planned plant shutdown should be scheduled.

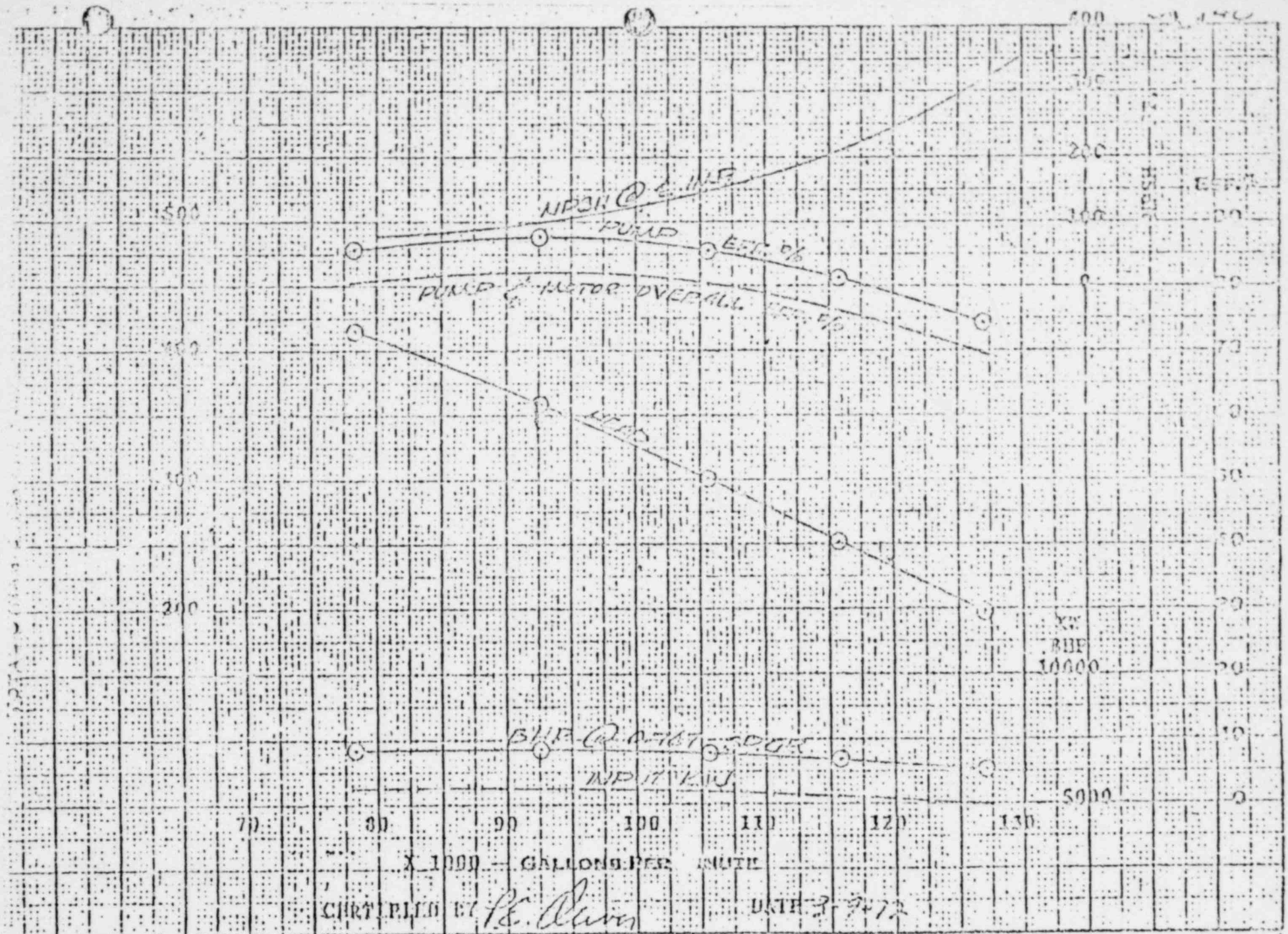

BABCOCK & WILCOX CO. ASSEM 40 IMPELLER S.N. 9	CHARACTERISTIC CURVE SHEET BINGHAM PUMP DIVISION	IMPELLER MAX. 35½ X DIA. 40½ MIN.	28 x 28 x 41 RQV DIA. IMPELLER: 33½ Rx37½ / IMPELLER PART: 2013 RQV-1	PUMP 1190 R.P.M.

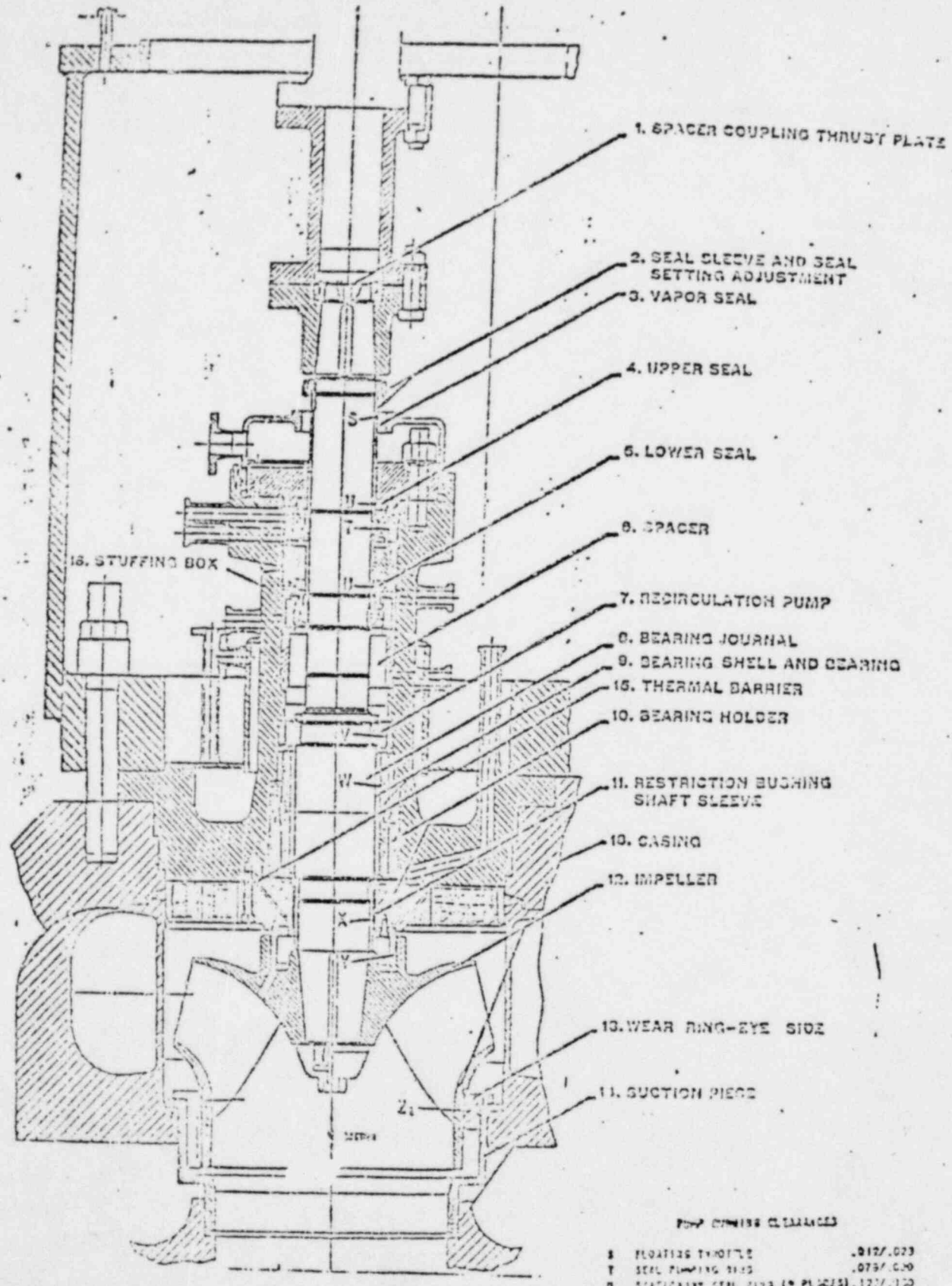

PUMP RUNNING CLEARANCES

S	FLOATING THROTTLE	.012/.023
T	SEAL PUMPING RING	.079/.090
U	STATIONARY SEAL RING (2 PLACES)	.127/.150
V	RECIRCULATION PUMP	.011/.025
W	BEARING	.011/.041
X	RESTRICTION BUSHING	.011/.025
Y	WEAR RING-EYE SIDE	.011/.024
Z_1	WEAR RING-EYE SIDE	.013/.1[illegible]

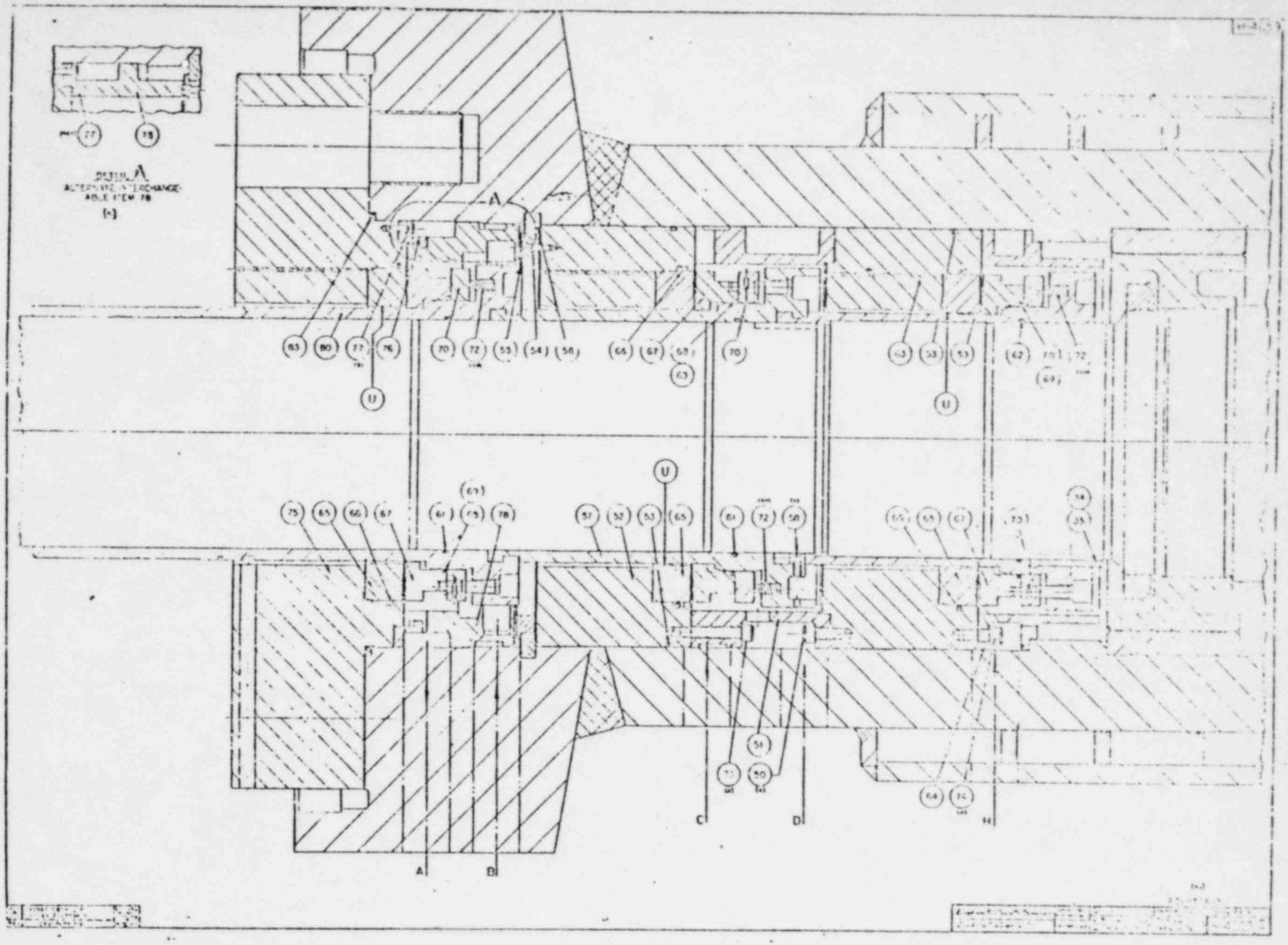
DETAIL A
ALTERNATE INTERCHANGEABLE ITEM 78
A
B
C
D
H
U

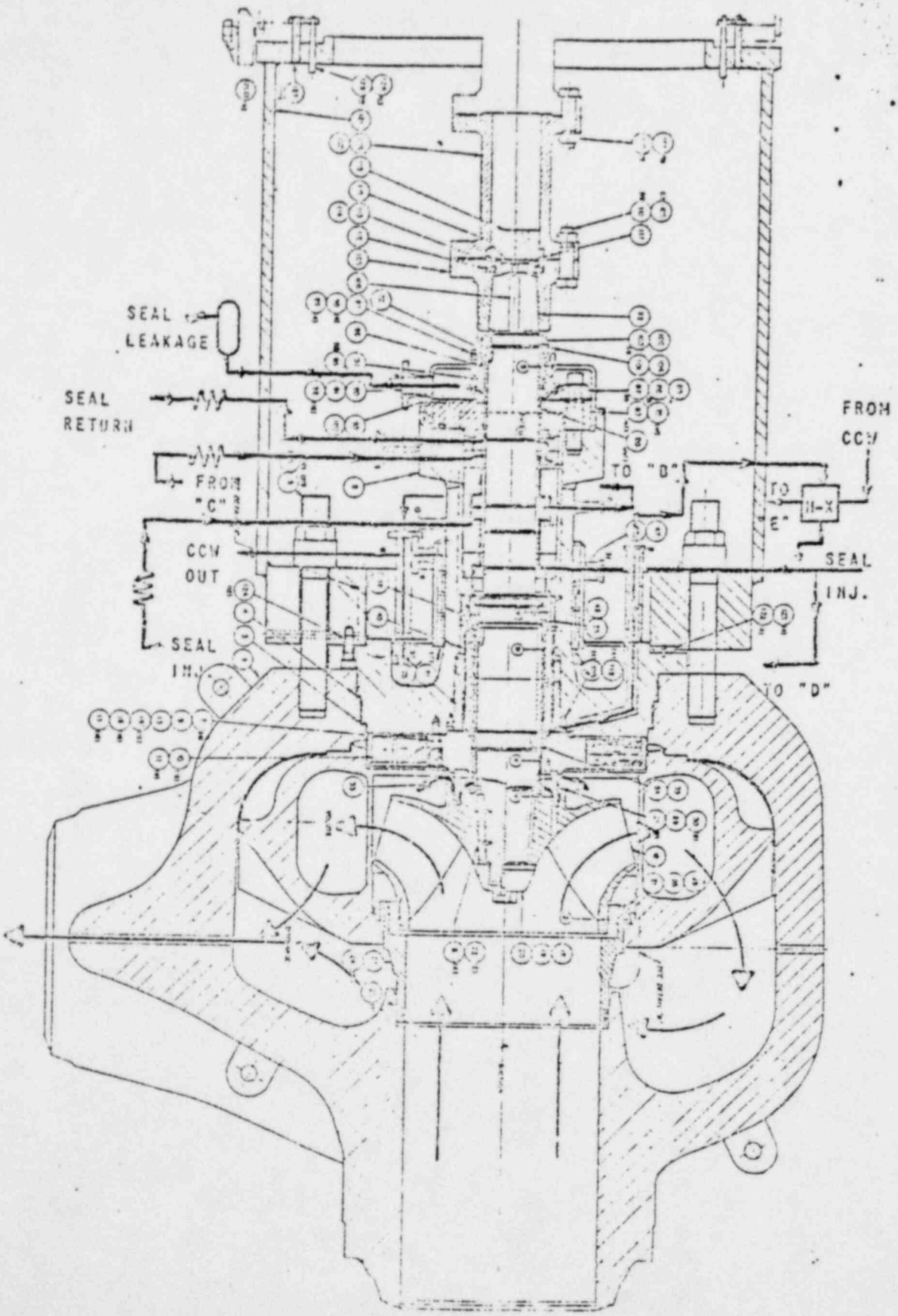
SEAL
LEAKAGE
SEAL
RETURN
FROM
"C"
CCW
OUT
SEAL
INJ.
TO "B"
TO
"E"
H-X
FROM
CCW
SEAL
INJ.
TO "D"

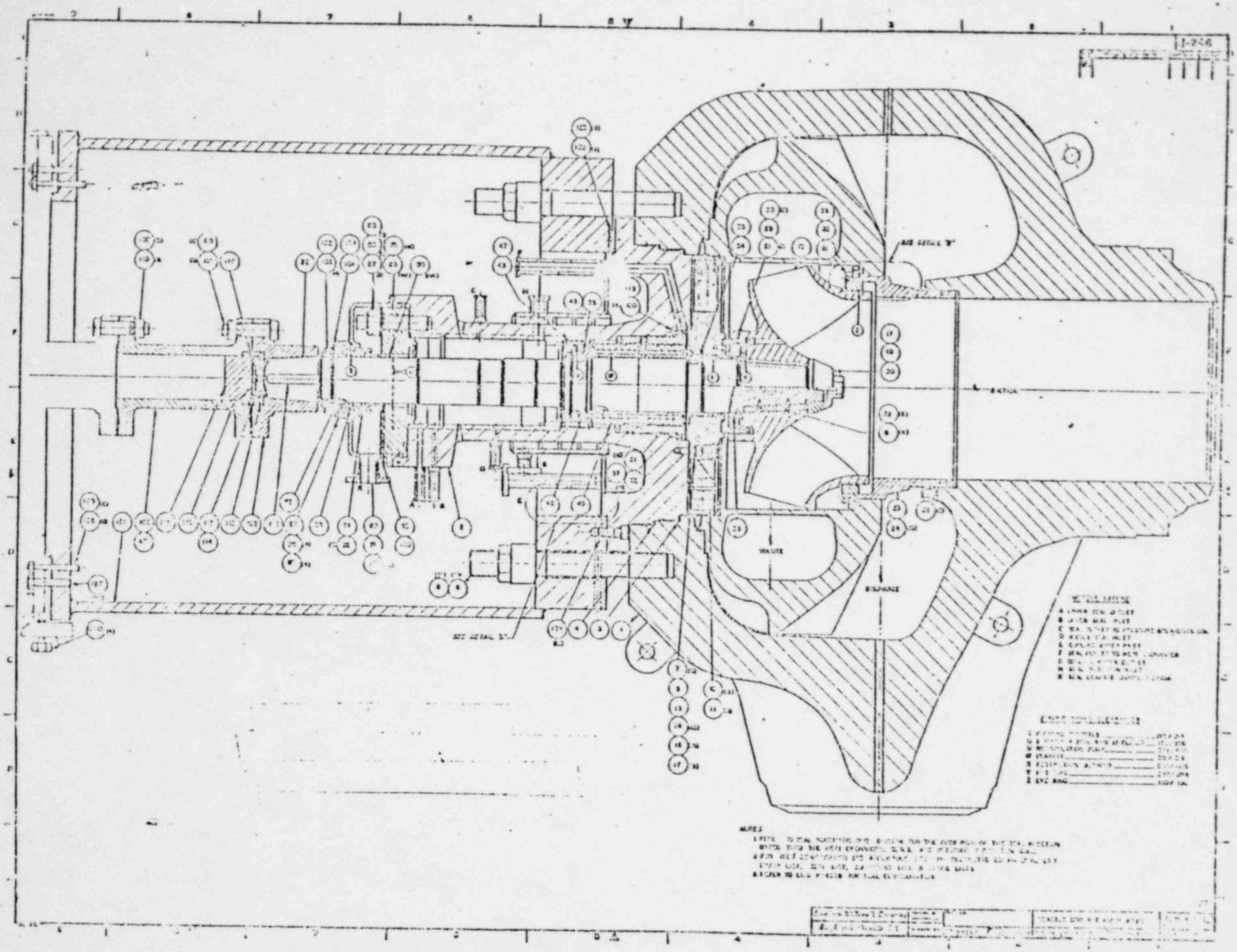
VOLUTE
DISCHARGE
NOTES

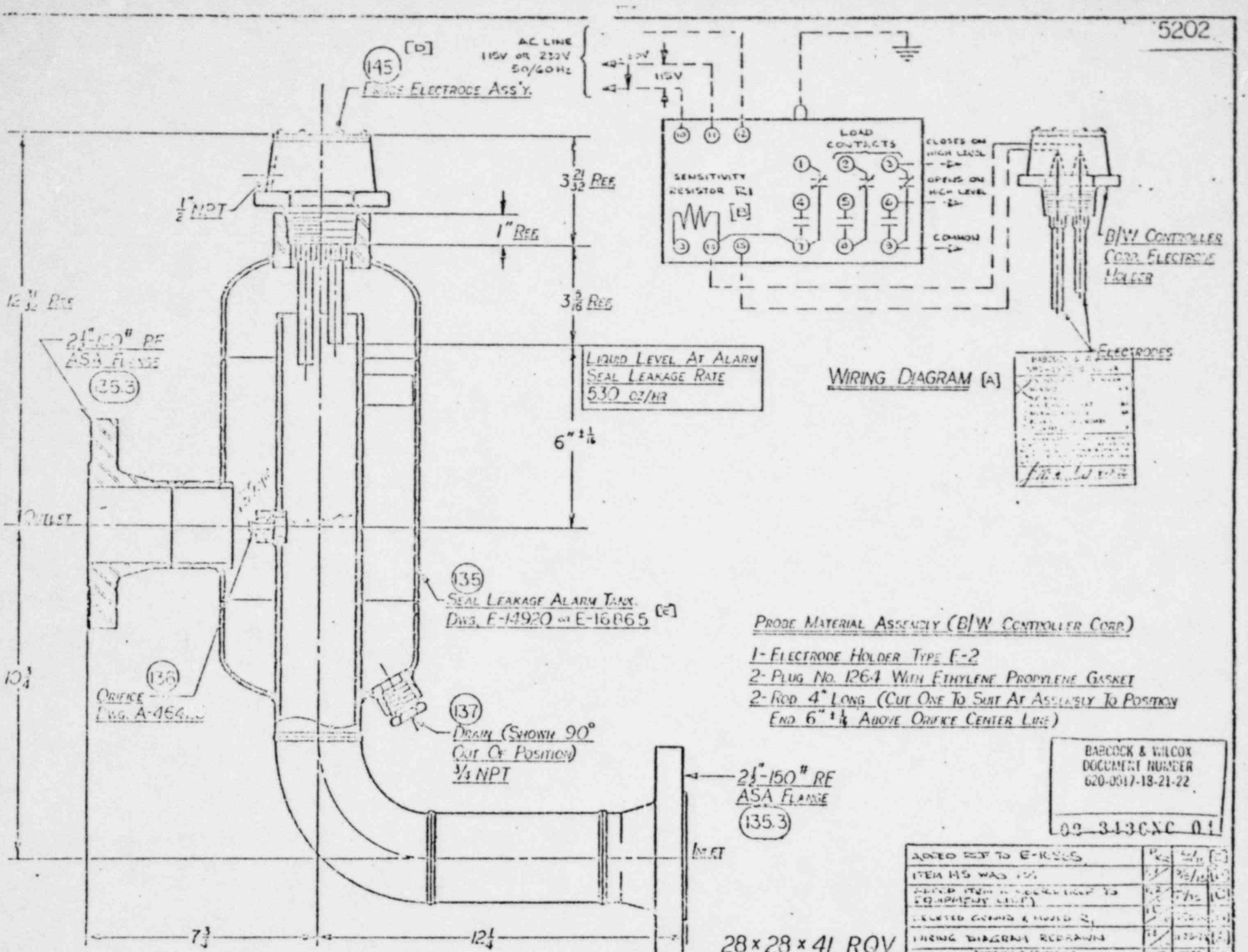
5202
AC LINE 115V OR 230V 50/60 Hz
115V
145 [D]
PROBE ELECTRODE ASS'Y.
1/2" NPT
3 21/32 REF
1" REF
3 5/16 REF
12 31/32 REF
2 1/2"-150# RF ASA FLANGE
135.3
LIQUID LEVEL AT ALARM
SEAL LEAKAGE RATE
530 OZ/HR
6" ± 1/16
OUTLET
135
SEAL LEAKAGE ALARM TANK
DWG. E-14920 or E-16865 [C]
136
ORIFICE
DWG. A-454
137
DRAIN (SHOWN 90° OUT OF POSITION)
3/4 NPT
10 3/4
2 1/2"-150# RF ASA FLANGE
135.3
INLET
7 3/4
12 1/4
28 x 28 x 41 ROV
SENSITIVITY RESISTOR R1 [B]
LOAD CONTACTS
CLOSES ON HIGH LEVEL
OPENS ON HIGH LEVEL
COMMON
WIRING DIAGRAM [A]
B/W CONTROLLER CORP. ELECTRODE HOLDER
ELECTRODES
PROBE MATERIAL ASSEMBLY (B/W CONTROLLER CORP.)
1- ELECTRODE HOLDER TYPE E-2
2- PLUG NO. 126-4 WITH ETHYLENE PROPYLENE GASKET
2- ROD 4" LONG (CUT ONE TO SUIT AT ASSEMBLY TO POSITION END 6" ± 1/4 ABOVE ORIFICE CENTER LINE)
BABCOCK & WILCOX DOCUMENT NUMBER 620-0017-13-21-22
02-313CXC 01
ADDED REF TO E-15565
ITEM 145 WAS 1/2
REVISION DESCRIPTION
PROBE ASS'Y. - SEAL LEAKAGE TANK
D-15202
E
DATE 4-19-73
SCALE 6" = 1 ft
E-14920
220X01-700

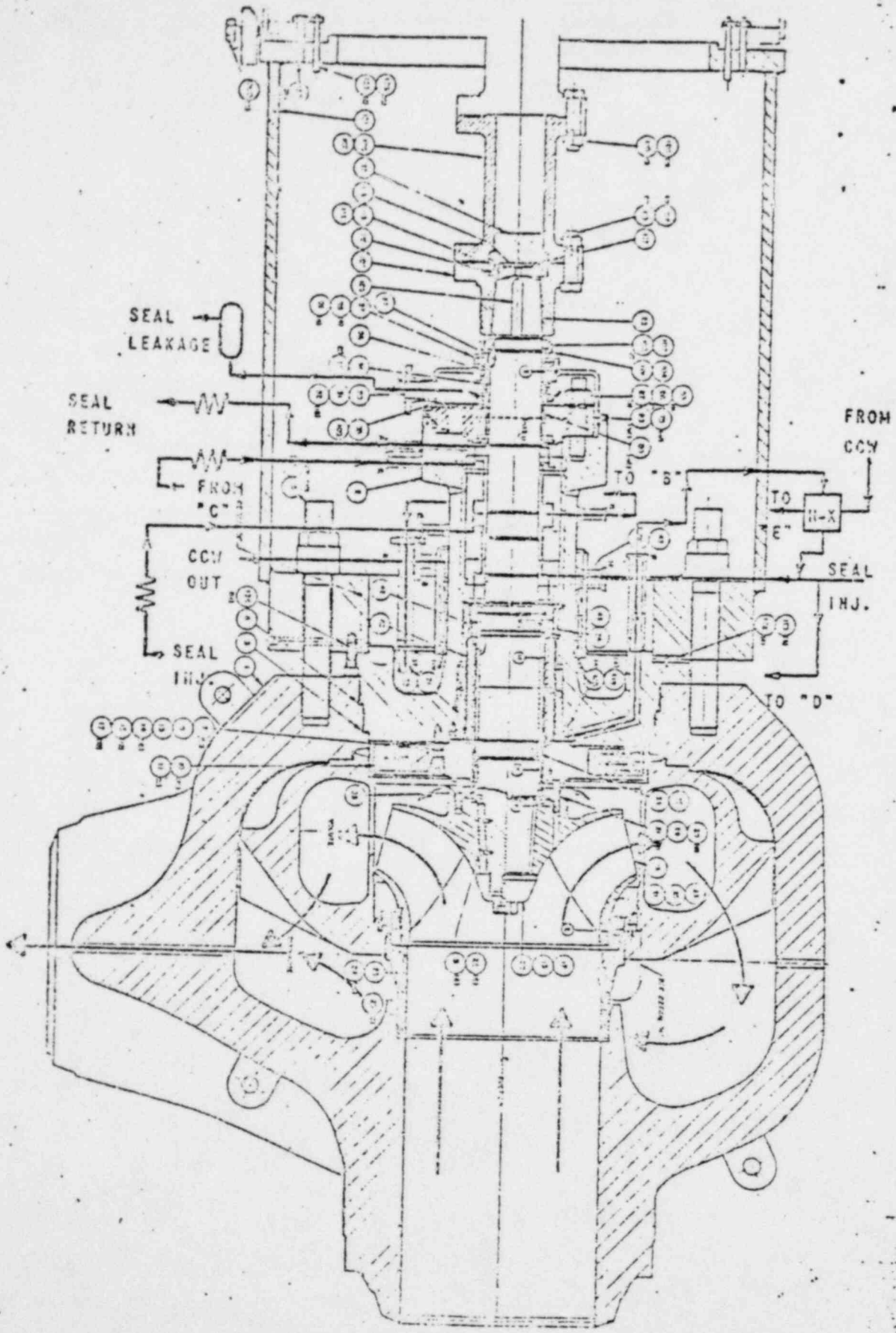
SEAL
LEAKAGE
SEAL
RETURN
FROM
"C"
CCW
OUT
SEAL
INJ.
TO "B"
FROM
CCW
TO
"E"
H-X
SEAL
INJ.
TO "D"

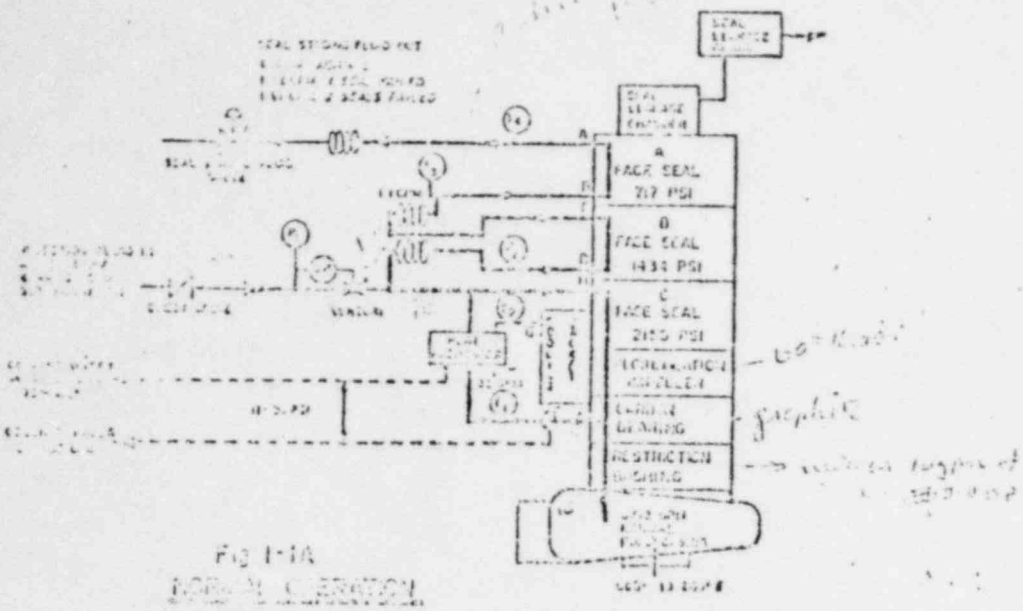

Fig 1-1A
NORMAL OPERATION

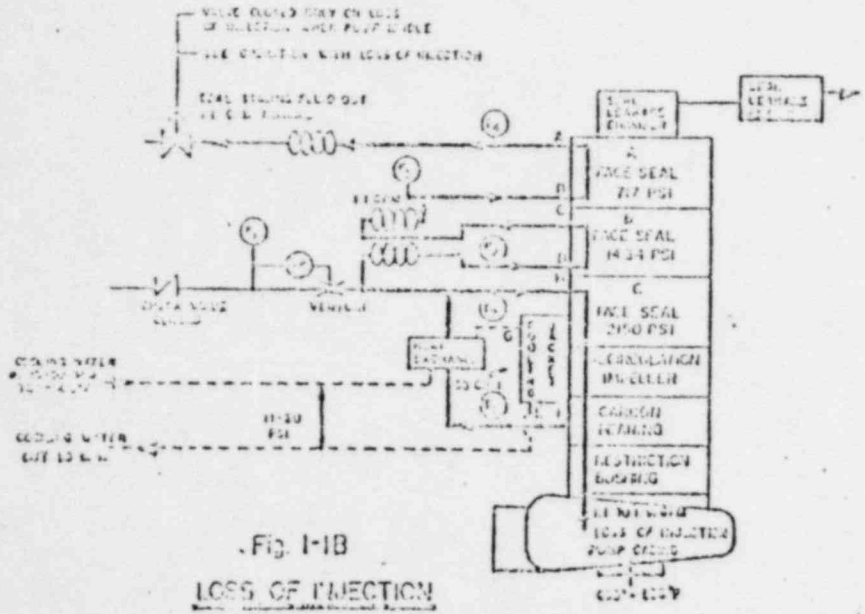

Fig. 1-1B
LOSS OF INJECTION

LEGEND

- (P) PRESSURE CONNECTION
- (T) TEMPERATURE CONNECTION
- (DP) CONNECTION FOR DIFFERENTIAL PRESSURE GAUGE (VERTICAL)
- --- COOLING WATER
- ═══ PRIMARY FLUID
- ═══ SYSTEM FURNISHED BY OTHERS

TEMPERATURES

TEMP	EXPECTED NORMAL	MAX ALLOWED
T1	[illegible]	165° F
T2	[illegible]	165° F
T3	[illegible]	165° F

SEAL LEAKAGE

NORMAL OPERATING	[illegible] GPM
ALARM LEVEL	[illegible] GPM
SHUTDOWN LEVEL	[illegible] GPM (Leakage + Staging)

NORMAL OPERATION (FIG 1-1A) NORMAL OPERATION IS THE CONDITION IN WHICH BOTH THE INJECTION WATER AND THE COOLING WATER SYSTEMS ARE FUNCTIONING, AND IS SHOWN IN FIGURE 1-1A. INJECTION WATER IS WORK TO THE EXTERNAL CIRCULATION SYSTEM SO THAT IT ENTERS THE PUMP AT THE FACE OF THE LOWER SEAL AND FLOWS DOWNWARD ALONG THE RECIRCULATION DEVICE AND PUMP CASING. THE INJECTION FLOW IS SET AT THE INJECTION PUMP SO THAT IS GPM PASSES TO THE LOWER SEAL CHAMBER TO EXIT THE RECIRCULATOR [illegible] AND 5 TO 15 GPM ENTERS THE PUMPED FLUID. THE FLOW TO THE PUMP IS CONTROLLED BY A FLOW CONTROL [illegible]

WHILE IDLING, THERE IS A CIRCULATION FLOW OF APPROXIMATELY 35 GPM CREATED BY THE RECIRCULATION IMPELLER THROUGH THE LOWER SEAL CHAMBER AND EXTERNAL HEAT EXCHANGER. THE [illegible] GPM INJECTION COMING FROM THE 35 GPM TO PROVIDE COOLING AND LUBRICATION FOR THE SEALS AND BEARING. THIS FLOW IS RECIRCULATED THROUGH THE ABOVE TUBE IN THE TUBE-IN-TUBE HEAT EXCHANGER. COOLING WATER IS CIRCULATED THROUGH THE HEAT EXCHANGER AT 35-50 GPM. THE MINIMUM COOLING WATER FLOW IS 20 GPM AND SHOULD BE MAINTAINED AT THIS RATE IF POSSIBLE.

OPERATION WITH LOSS OF COOLING WATER SHOULD COOLING WATER TO THE PUMP STOP FOR ANY REASON, OPERATION CAN CONTINUE WITH ACCURATE COOLER FURNISHED BY THE [illegible] FLOW. REMOVING COOLING WATER TO A HOT PUMP SHOULD BE MADE GRADUALLY TO AVOID [illegible] STRESS IN THE PUMP COOLER. TEMPERATURES T2 AND T3 SHOULD BE MONITORED CLOSELY AND IF EITHER ALARMS (165°F) THE PUMP SHOULD BE COOLED DOWN AND THE SEALS DISASSEMBLED AND INSPECTED.

OPERATION WITH LOSS OF INJECTION FLOW (FIG 1-1B) IF FOR ANY REASON THE INJECTION FLOW TO THE PUMP DROPS BELOW THE [illegible] THE PUMP IS [illegible], OPERATION CAN BE MAINTAINED WITHOUT INTERRUPTION. THE [illegible] OF [illegible] IN FIGURE 1-1B. IN THIS SITUATION, STATIC FLOW OCCURS FROM THE [illegible] THROUGH THE [illegible] AND THE [illegible] PRESSURE. [illegible] WITH THE 35 GPM CIRCULATION AND IS COOLED BY THE HEAT EXCHANGER. THE COOLING WATER THE BRAKING [illegible] HEAT EXCHANGER CONTINUE TO KEEP THE TEMPERATURE AT THE SEAL CHAMBER COOL. TEMPERATURES T2 AND T3 SHOULD BE MONITORED CLOSELY AND IF EITHER ALARMS (165°F) THE PUMP SHOULD BE COOLED DOWN AND THE SEALS DISASSEMBLED AND INSPECTED.

SCOPE

THE PURPOSE OF THE SEAL SYSTEM IS TO PREVENT LEAKAGE OF HIGH PRESSURE PRIMARY FLUID BETWEEN THE PUMP SHAFT AND PUMP HOUSING IN A RELIABLE ECONOMIC MANNER. THE ABOVE DESCRIBES THE DIFFERENT MODES OF OPERATION AND THE PROCEDURES TO FOLLOW IN EACH MODE. THE SYSTEM IS DESIGNED WITH COOLING SYSTEM REDUNDANCY SO THAT OPERATION CAN CONTINUE WITH EITHER LOSS OF COOLING WATER OR A LOSS OF INJECTION FLOW. [illegible] IS ALSO DESIGNED TO WITHSTAND FULL SYSTEM PRESSURE.

(as specified) pressure drop, more or less [illegible] due to [illegible] seal [illegible]

[illegible] seals on test.

Characteristic	Parameter
Dimensions:	
Width	8 feet 10 inches
Depth	13 feet 1-11/16 inches
Height (including Motor)	30 feet 11-5/16 inches
Weights:	
Motor	103,000 pounds
Pump and Accessories	110,000 pounds (dry) 125,000 pounds (wet)
Unit Total	195,000 pounds (dry) 228,000 pounds (wet)
Motor:	
Manufacturer and Model	Allis-Chalmers 33827 through 33830
Type	Vertical, solid shaft, six-pole induction motor
Horsepower	9000 horsepower
Voltage	6,600 volts ac, three-phase
Frequency	60 Hz
Pumps:	
Type	Vertical, quad volute, single suction, single stage
Rated flow	92,400 gpm
Rated head	371 feet
Efficiency at Rated Flow	87%
Pumpage	Reactor water (1.0 to 0.747 specific gravity at 70 to 585°F)
Rated Speed (Full Load)	1,185 rpm
Shaft Seals	Bingham mechanical seal
Cooling Water Requirements:	
Temperature	70 to 105°F
Design Pressure	150 psi
Flow Rate	35-50 gpm
Injection Water Requirements:	
Temperature	70 to 115°F
Flow Rate	6.1 to 16.1 gpm (11 gpm Nominal)
Seal Staging Flow	1.1 gpm Nominal
Seal Leakage	0.1 gpm Nominal

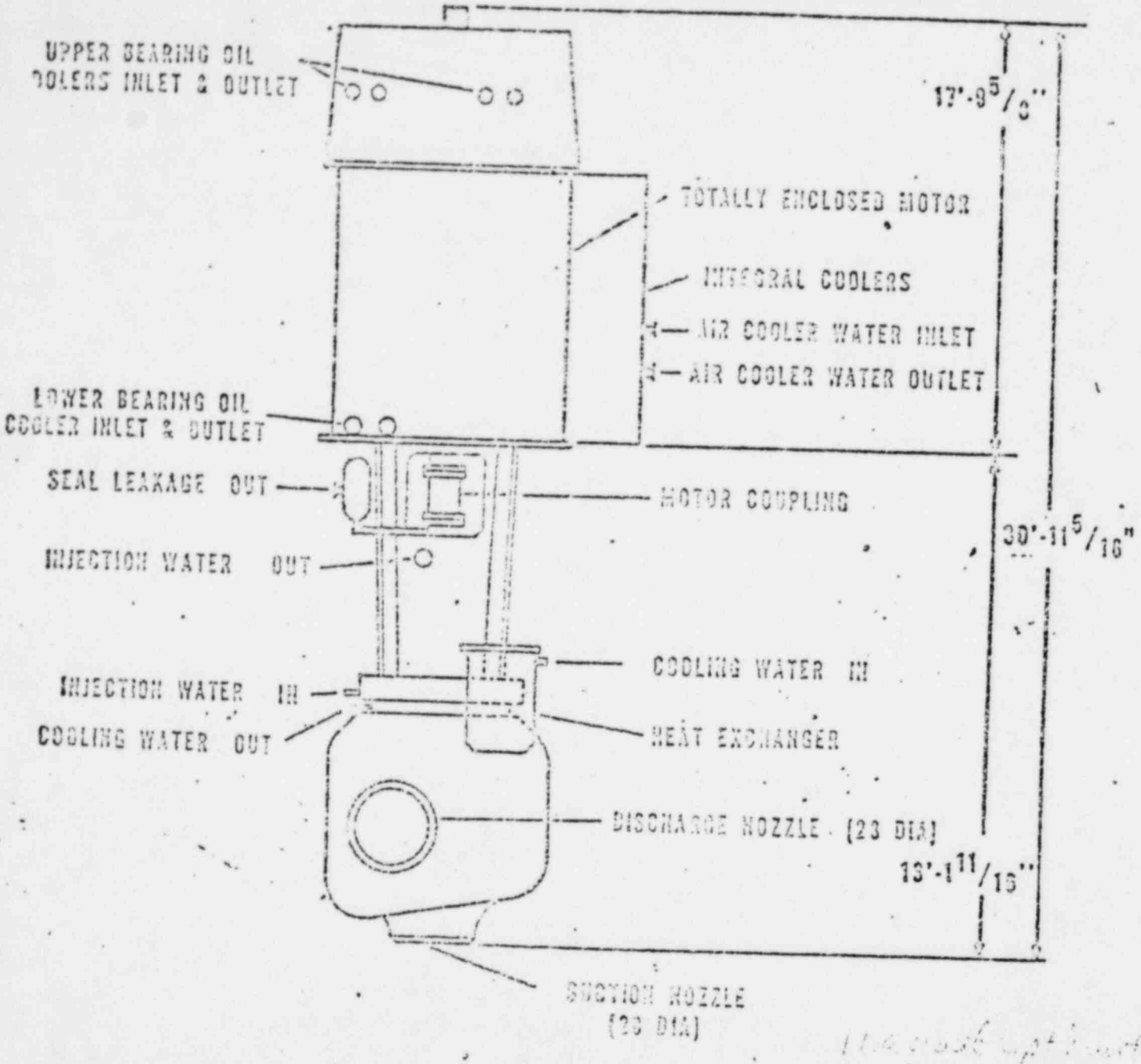

REACTOR COOLANT PUMP AND MOTOR

UNIT II RCP SEALS

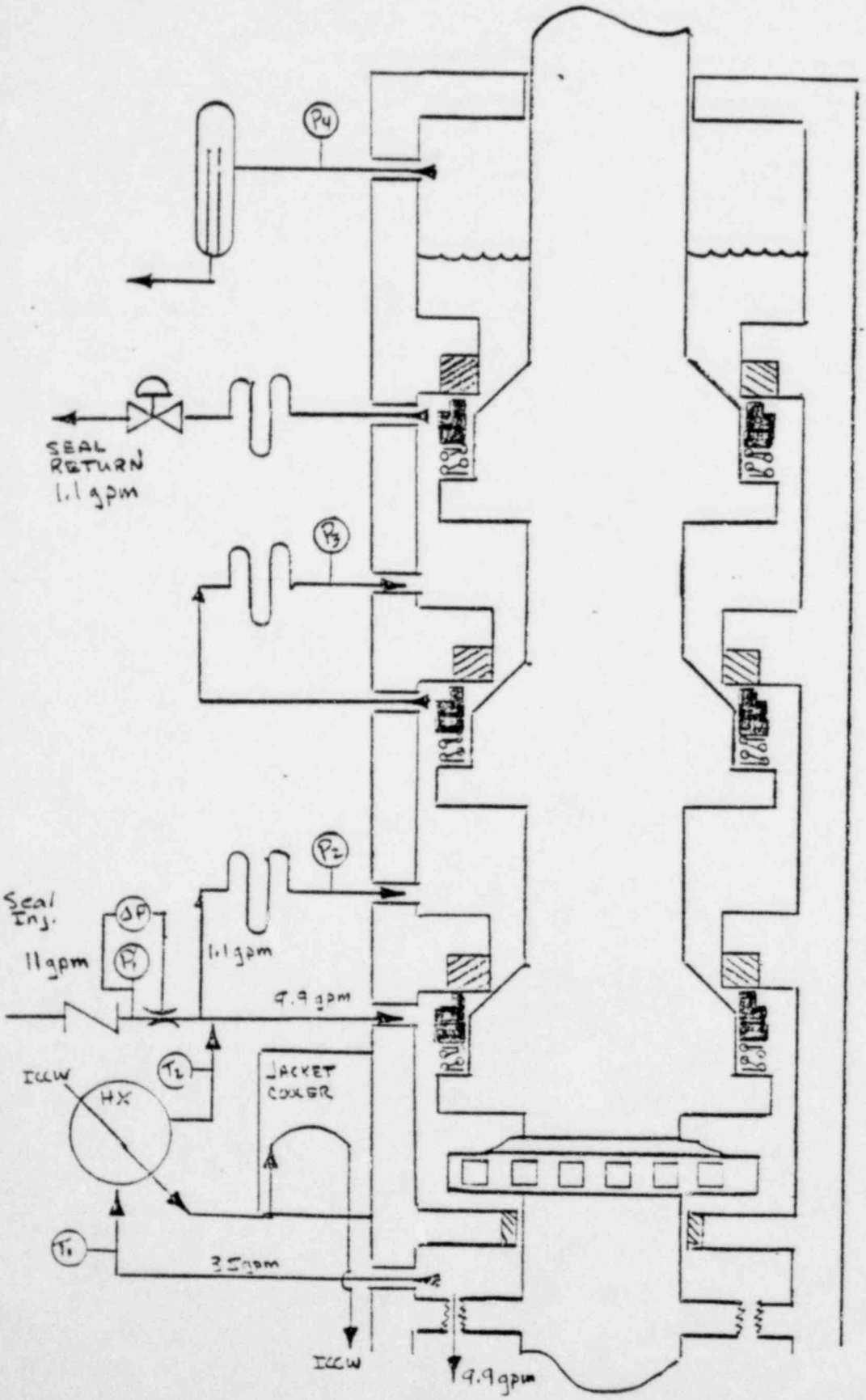

P1 = 2150 psig

P2 = 2150(.66)

P3 = 2150(.33)

P4 = ATMOS.

ENCLOSURE I

UNIT II CATEGORY IV STUDY ASSIGNMENT SHEET

CYCLE 4-2

Name:_____ Start Date:_____
Completion Date:_____

1. Read NSSS12.
2. Read FSAR Chapters 4, 5, & 7.
3. Read CRD Electrical Handout.
4. Read Diamond Power CRDC Manual
5. Read the following procedures:

   a) 2105-1.9, CRD System
   b) 2203-1.2, CRD Failures
   c) 2203-1.3, CRD Malfunction Action

6. Complete CRD Questionnaire
7. Read Bailey ICS Instruction Manual, Vol. 2
8. Read NSSS 23
9. Read FSAR Chapter 7.
10. Read ICS Analog/Digital Logic Drawings.
11. Read 2105-1.4 ICS.
12. Read B&W ICS Transient Response Book.
13. Read B&W Videotape Manual, Watch ICS Tapes.
14. Complete ICS Questionnaire.
15. Read second half of Section 6, Tech. Specs. (Administrative)

Total points to date from Enclosure 2 _____

Written test date_____ Results_____

Oral test date_____ Results_____

Answers missed, handed in corrected_____

_____/_____
Signature of Licensed Training Coordinator Date

Cycle 4-2

REFERENCE MATERIAL FOR QUESTIONNAIRE

Ref. #	Title
1	2105-1.9 CRS System
2	CRD Electrical Hanout (provided)
3	NSSS 12
4	2203-1.3 CRD Malfunction Action
5	Bailey ICS Instruction Manual, Vol 2
6	NSSS 23
7	ICS Analog/Digital Logic Drawings
8	B&W ICS Transient Response Book
9	Diamond Power CRDC Manual
10	FSAR Chapter 4
11	2105-1.4 ICS
12	B&W ICS Videotapes and Manual
13	2101-1.1 Nuclear Plant Limits and Precautions
14	OTSG Handout (provided)

UNIT II

CONTROL ROD DRIVE AND ROD POSITION INDICATION

4-2

1. a) Describe how relative position indication is developed. (Ref 3)

   b) What functions are provided by relative position indication? (Ref 2)

   c) What happens to relative position indication on a trip? (Ref 2)

   d) How is relative position indication reset after a trip? (Ref 2)

2. a) Describe how absolute rod position indication is developed. (Ref 3)

   b) What functions are provided by absolute position indication? (Ref 2)

3. Draw the power for the control rods from the 480v buses. Show the following: (Ref 2)

   1) All voltages

   2) Transformers

   3) All trip breakers

   4) Trip logic from RPS to UV coil

   5) Manual trip push button interface

   6) Electronic trip relays

4. Describe the electronic trip circuit. (Ref 2)

5. What happens to the CRDM when the trip breakers open? (Ref 3)

6. Explain the 1 out of 2 times 2 logic. (Ref 3)

7. a) What are the control rod speeds? (Ref 10)

   b) Explain the basis for each speed. (Ref 10)

8. What happens to the group 8 rods on a reactor trip? Why? Be specific. (Ref 3)

9. Explain how operation of the programmer motor produces CRD motion. Be specific. (Ref 2)

10. What is the purpose of the clamping contactors? (Ref 2)

11. What indication of rod position can be obtained outside the control room? (Ref 9)

12. a) Why is oberlap between Control Rod Groups required? (Ref. 3)

    b) What are the limits for overlap? (Tech Specs)

13. What is necessary to enable group 5, 6, & 7 for sequence? (Ref 2)

14. What causes a sequence fault? (Ref 2) (Ref 1)

15. a) With respect to the CRD system, when do you need intermediate cooling in operation? (Ref 1)

    b) What is the minimum intermediate cooling flow to the CRD? (Ref 1)

    c) Above what temperature must a control rod drive motor be de-energized? (Ref 1)

    d) What is the maximum CRD run time? (Ref 3)

16. What is the purpose of the safety rods bypass switch? (Ref 2)

17. a) What conditions must exist prior to going to auto at the CRD Panel? (Ref 2)

    b) What will trip the CRD to manual? (Ref 2)

18. Explain the "Motor Fault" interlock. (Ref 1)

19. What does the programmer lamp fault light indicate? (Ref 1)

20. What does the loss of a system power supply lamp indicate? (Ref 1)

21. Describe the consequences from loss of the group 4 outlimit light at 100% power. (Ref 2)

22. Briefly describe the steps necessary to transfer Group 1 Control Rods to the auxiliary power supply. (Ref 1)

23. What does the loss of a motor power supplies lamp indicate? (Ref 1)

24. What is the purpose of the latch pushbutton? (Ref 2)

25. When is a control rod declared inoperable? (Tech Specs)

26. How often are control rods exercised? (Tech Specs)

27. What limitation, if any, is placed on operation with an inoperable rod? (Tech Specs)

28. What conditions are necessary to receive the Feed & Bleed permit signal? (Ref 2)

29. What will cause an out inhibit? (Ref 1)

30. Outline your immediate and followup actions on Receipt of a 9" asymmetric rod alarm while at 95% power. (Ref 4)

31. What is your immediate action on a motor fa[illegible] alarm? (Ref 4)

32. Supply a simplified drawing of the "M[illegible] [illegible]d Position Error Signal" development. (Ref. 2)

UNIT II

INTEGRATED CONTROL SYSTEM QUESTIONNAIRE

4-2

1. What is the normal setting on the minimum load limit? What is the range for this setpoint? (Ref 11)

2. List the ICS runbacks, their setpoints and rates. (Ref 7)

3. Briefly explain the purpose for the frequency correction signal in the ICS. (Ref 5)

4. Explain the term tracking. (Ref 5)

5. What conditions will put the ICS in the tracking mode? (Ref 5)

6. Explain what is meant by and give example of:

   a) Feed forward signal (Ref 5)

   b) Borrowing energy (Ref 5)

   c) Storing Energy (Ref 5)

7. What are the purposes of the bypass valves? (Ref 5)

8. At what setpoints do the bypass valves control and what shifts these setpoints? (Ref 7)

9. Describe operation of the atmospheric dumps. (Ref 6)

10. a) What is the purpose of a calibrating integral? (Ref 5)

    b) Where does the ICS use calibrating integrals? (Ref 5, 7)

11. a) How is a megawatt error developed? (Ref 7)

    b) How is the megawatt error used by the ICS? (Ref 7)

    c) Is megawatt error used in track? (Ref 7)

12. What has the responsibility of controlling turbine header pressure with the turbine in coordinated control? In turbine manual? In track? (Ref 5)

13. a) What is meant by cross limits and what will give you this condition? (Ref 12)

    b) How do crosslimits affect the system (Ref 12)

    c) What alarms are associated with cross limits? (Ref 11)

14. a) Why do we maintain a small ΔT_c? How is this accomplished? (Ref 5)

    b) What conditions must be met in order to have the ICS automatically control T_c? (Ref 7)

15. a) What is the purpose of BTU limits? (Ref 5)

    b) What parameters are monitored to impose BTU limits? Which direction must each go to cause a BTU limit. (Ref 5)

16. What is the purpose of the OTSG high level limit? Low level limit? (Ref 6)

17. a) What conditions will cause the Emergency Feed Pump(s) to start automatically? (Ref 7)

    b) What OTSG levels are maintained for each condition? (Ref 7)

    c) What is the reason for the difference in levels given in part b? (Ref 5, 6)

18. Draw curves showing the following values from 0-100% power: (Use "Actual" values) (Ref 13)

    a) Tc
    b) Th
    c) Tave
    d) Tsat (OTSG)
    e) Steam temperature (plot guaranteed and actual)
    f) OTSG pressure
    g) Header pressure
    h) OTSG level

19. Explain (using $Q = UA\Delta T$) why tavg increases between 0-15% power and is constant from 15-100% power. (Ref 14)

20. Explain the reason for the shape of the steam temperature curve. (Ref 14)

21. Why does OTSG pressure increase from 0-100% power? (Ref 14)

22. Why do we maintain a constant differential pressure across the feedwater control valves and how is this done? (Ref 14)

23. a) Give the response of the ΔT_c control system to a loss of 1 RCP @ 75% power. (Ref 8)

    b) Why isn't feedwater ratioed on a 2:1 basis? (Ref 8)

24. What is the purpose of the reactor demand calculator? (Ref 5)

25. a) What will shift Tave control from the CRD to feedwater? (Ref 7)

    b) What conditions must exist for feedwater to accept Tave control? (Ref 7)

26. The reactor control subsystem will not pass a load demand signal less than 15% but the limit after the Tave controller is 10%. Why the difference? (Ref 5)

27. a) How is the Neutron error signal developed? (Ref 7)

    b) How is Neutron error affected with Reactor demand and Diamond in manual? (Ref 7)

28. What conditions must exist to place the diamond control station in automatic? (Ref 2)

29. Where does the ICS receive power from? (Ref 11)

30. In what order (and at what point in the heatup/startup) are the ICS stations placed in automatic? (Ref 11)

31. Describe overall system response to an increase in unit load demand. (Ref 12)

32. Discuss the response of the ICS to the following failures:

    a) NI input failed low (from 100% power) (Ref 8, 7)

    b) Tc input failed low (from 50% power) ("A" loop) (Ref 8, 7)

    c) Th failed low (from 100% power) (Tavg & BTU limits input) (Ref 8, 7)

    d) "A" loop Main Feedwater block valve fails closed during a power escalation. (startup) (Ref 8,7)

33. How will the plant respond if the diamond is in manual and a heater string is bypassed at 95% power? (Ref 8, 7)

34. How will the system respond to two steam dumps ($\approx$ 8%) failing open at 50% power? (Ref 8, 7)

TMI 2 Asymmetric Rod Runback

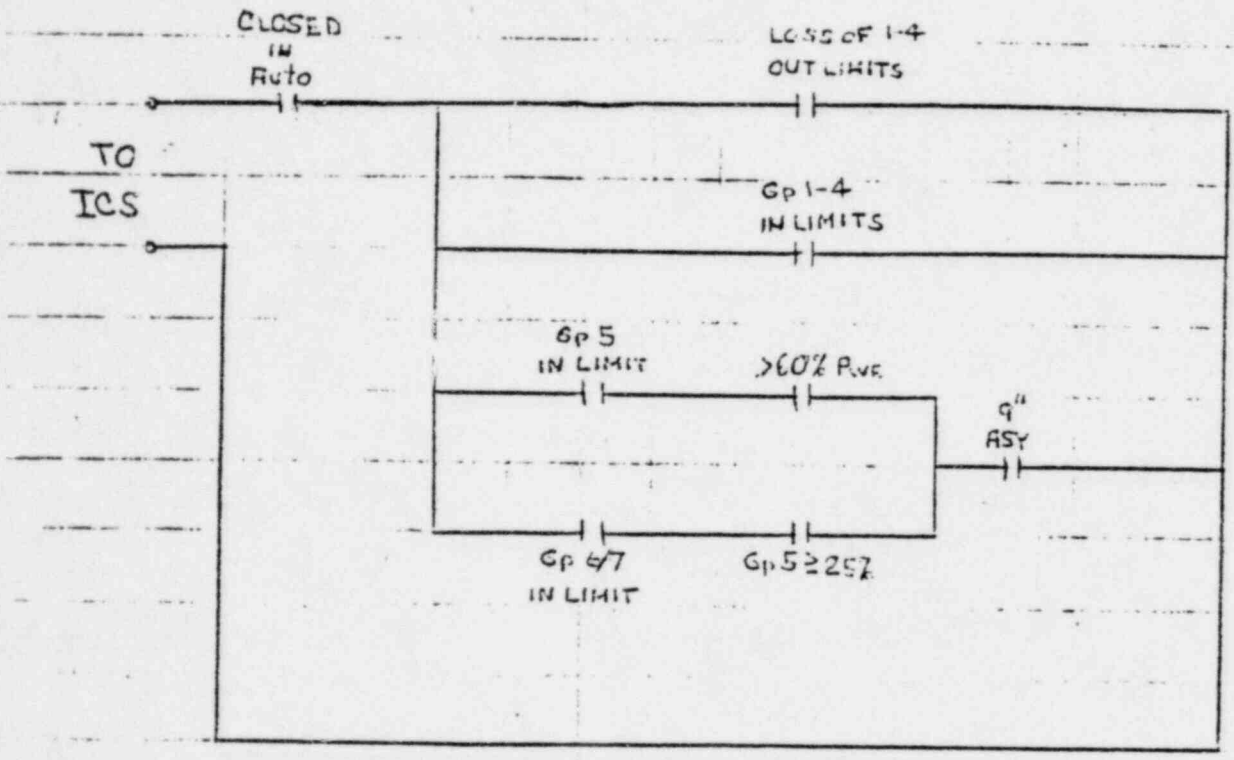

UNIT 2 CR' 'RIP CKT.

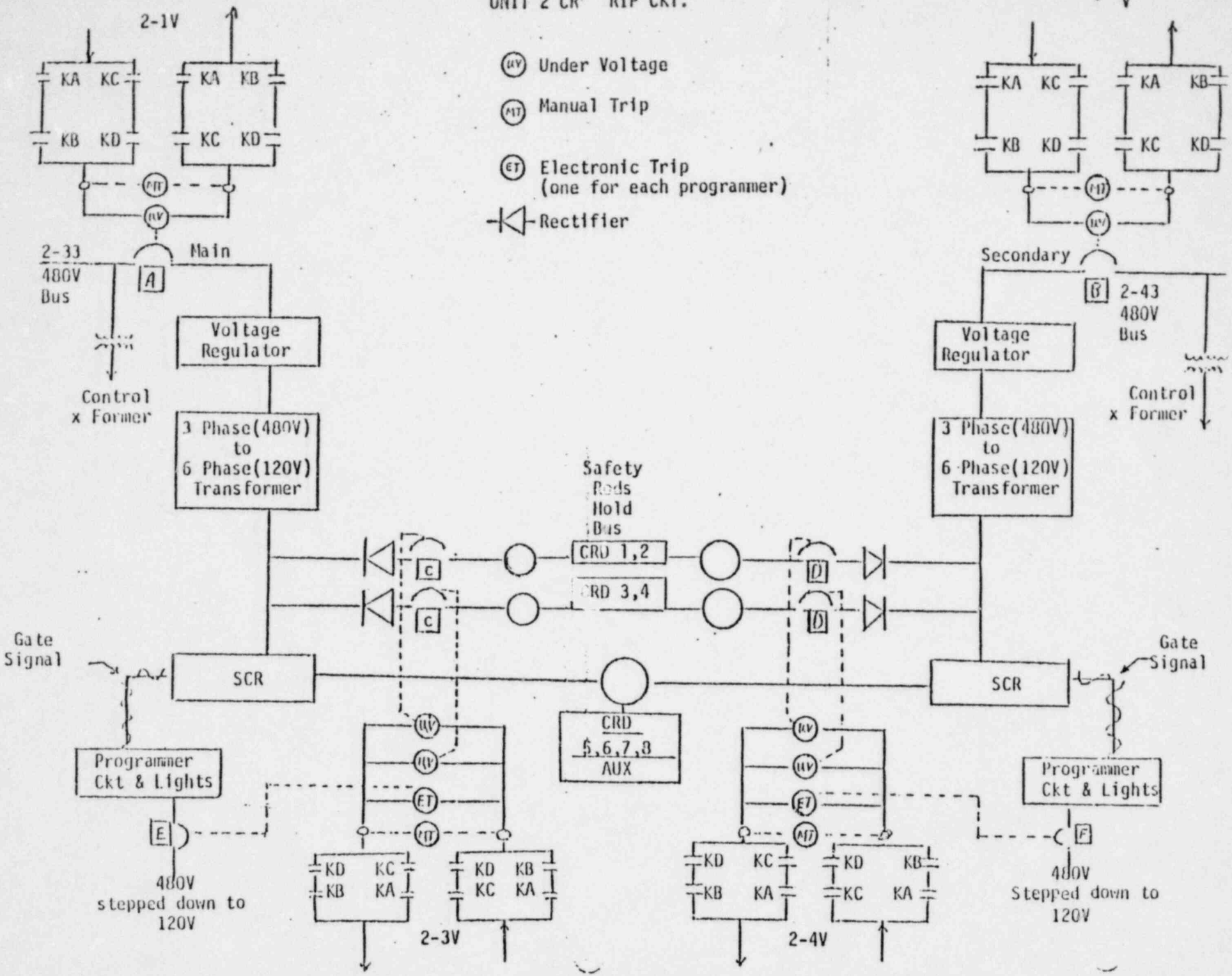

A. <u>4 Pole, 6 Phase Reluctance Type Mechanism</u>

1. 4 pole - with power applied, 2 north and 2 south poles are produced.

2. 6 phase - designated A,B,C,AA,BB, & CC. The A and AA, B and BB and C and CC windings are bifilar. Each pair is in the same physical location on the stator (wound on top of each other), but when energized will produce magnetic fields of equal and opposite polarity. For example, the A phase will produce a field equal in strength but opposite in polarity to the field produced by the AA phase. If the A and AA windings are energized simultaneously their fields will cancel. Simultaneous energizing of bifilar pairs does not occur during normal operation.

3. Power to each winding is 120 VDC, rectified from 120 Vac 6 phase.

   a. 6 phase used to produce high average level DC with low ripple.

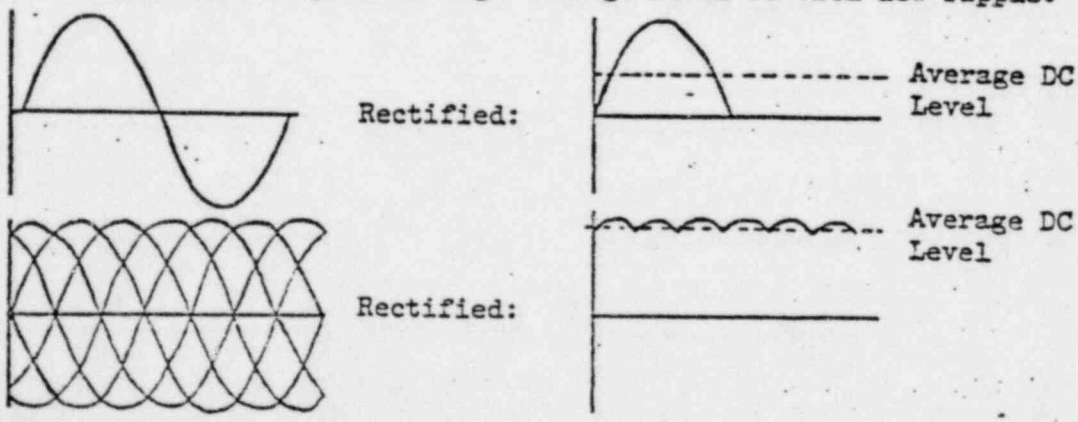

4. When power is applied, 2 adjacent phases are energized.

   a. A 4 pole magnetic field is generated, causing the roller nuts to engage the leadscrew.

   b. One phase is sufficient to cause engagement of the lead screw. Two phases are energized for redundancy.

c. With the mechanism stationary, 2 phases is the maximum number allowed to be energized. This is done to prevent possible heat damage to the stator due to high current flow (approximately 18 amps per phase).

5. Rotation of the mechanism is accomplished by energizing 2-3-2-3 phases in a prescribed sequence. Each shift from 2-3 or 3-2 phases energized results in a 15° shift in magnetic pole position, and thus a 15° rotation of the mechanism.

   a. One mechanical rotation requires two electrical rotations.

   b. Speed and direction of rotation of the mechanism is determined by the speed and direction of rotation of the magnetic field.

6. De-energizing the windings results in a loss of magnetic field. The springs between the segment arms can then push the segment arms out, disengaging the roller nuts from the leadscrew, and the rod will drop into the core.

   a. A trip can result from the failure of one phase while the mechanism is in motion. As can be seen in the transparencies, a failure of this type will eventually result in flux lines "shorting" between poles without passing through the segment arms. This will cause a reduction in the force being exerted on the segment arms by the magnetic field. When this force is reduced to the point where it no longer balances the counter-force of the segment arm springs, a trip of the mechanism will result.

B. Programmers

1. The 2-3-2-3 sequencing of the phases is accomplished by a programmed power supply.

   a. 2 split phase drive motors

      i. 60 RPM for RUN speed (30 inches/minute)

      ii. 6 RPM for JOG speed (3 inches/minute)

   b. Drive motors are coupled to an optical disc.

      i. Slotted disc with 2 redundant light sources on one side, two redundant sets of photo detectors on the other side.

         aa. Each set of photo detectors has one detector for each of the six phases plus one detector for the 3-2 hold circuit. Seven detectors per set, 14 detectors per programmer.

      ii. As the disc rotates, transparent windows on the disc pass in front of the light sources. The light passing through the windows activates the photo detectors. The windows, which are symmetric about the disc's diameter, are arranged so that redundant photo detectors are activated in the desired 2-3-2-3 sequence. The output of each photo detector is used to drive a relay which closes a contact in a 12 VDC gate drive circuit. The gate drive associated with the A phase, for example, is used to turn on (gate) the rectifying bank which supplies power to the A phase of the rods in that power supply (group). Thus, the 2-3-2-3 sequencing of the photo detectors results in the sequential energizing of the stator windings.

2. Rectifying Banks

   a. Silicon controlled rectifiers

      1. 6 phase 120 Vac in, 120 VDC out.

   b. 2 redundant sets of 36 diodes

      i. 6 (for 6 phase ac input) in parallel per phase (A,B,C,AA, BB,CC) for a total of 36.

      ii. One set of 36 per ac source. Since 2 redundant ac sources are provided, there is a total of 72 diodes per programmed power supply.

   c. As the SCR's are gated, they rectify 120 Vac and pass it to the stators as 120 VDC.

   d. The SCR's sequentially energize the A,B,C,AA,BB,CC phases of a main feeder bus. The mechanisms associated with the power supply are fed in parallel from this main bus; thus, all the mechanisms have the same windings energized at the same time.

3. The 7th photo detector in the set energizes the 3-2 hold circuit:

   a. When the mechanisms stop with 3 phases energized, this cell is activated. A relay is energized which causes a Jog in signal to be sent to the programmer. When it steps back (1 step) to a 2 phase energized condition, the photo detector turns off, the relay de-energizes, and motion stops.

4. DC Brake

   a. With no motion command present, the programmer motors are prevented from rotating by applying 60 VDC to them in place of 120 Vac. If normal brake power is lost, a 24 VDC brake is supplied through the direction error circuitry.

C. Power Supplies and Power Distribution

1. 5 programmed power supplies:

   a. One per regulating group (5, 6 and 7)

   b. One for Group 8

   c. One auxiliary power supply

      i. used to move the safety rods (groups 1-4)

      ii. used as a backup for a group's normal power supply.

2. DC Hold

   a. Since the safety rods are not normally moved during operation, they do not require their own programmed power supplies. They are maintained in place by applying 120 VDC (rectified from 6 phase 120 V ac) directly to the A and CC phases. If we desire to move safety rods (creating a rotating field), we must use the auxiliary power supply. The DC hold power supply uses 48 diodes in the rectifying bank; 6 for A phase on Group 1, 6 for A phase on Group 2, 6 for A phase on Group 3, 6 for A phase on Group 4, 6 for CC phase Group 1, 6 for CC phase Group 2, 6 for CC phase Group 3, 6 for CCphase Group 4.

3. Power

   a. Input is 480 or 575 Vac 3 phase

      i. 2 sources

         aa. One normally supplied from an auxiliary bus, one from a safeguards bus.

      ii. Each source is regulated to ± 2%.

      iii. Step down transformers

         aa. 480 or 575 V ac 3 phase to 120 V ac 6 phase

iv. Downstream of the voltage regulators are 2 stepdown transformers (1 per source).

aa. 480 or 575 V ac 3 phase to 120 V ac single phase to supply:

1) clamping contactors and control relays

2) transfer relays

3) ac breaker closing coils

4) programmer power supplies - motors, light sources, gate drives, direction error circuitry.

v. Main ac breakers - A and B

aa. Breaker is tripped by manual trip or RPS

bb. Source interruption device -

1) overvoltage - greater than 140 V ac sensed at the transformer output will trip that side breaker

2) undervoltage - sensed at the output of DC hold rectifying banks. Loss of both A and CC phases will trip both the A and B breakers. This feature provides rachet trip protection.

vi. Redundant sources -

aa. Either ac input is sufficient for system operation.

1) one source feeds the A phase of the DC hold bus; the other source feeds the CC phase. Since one phase is sufficient to hold the rods (when stationary), loss of one source will not effect the rods on DC hold.

2) each programmed power supply has 2 ac inputs in parallel. Loss of 1 source has no effect on the power supply.

vii. DC hold bus breakers - C and D

aa. Breakers are tripped by manual trip or RPS

viii. Electronic trips

aa. Tripped by manual trip or RPS

bb. 2 contacts per programmed power supply

1) opening a contact interrupts 24 VDC power to one light source in a power supply. If both contacts open, both light sources turn off, no gating signal is sent to the SCR's, and all rods powered by that supply will trip.

cc. 10 contacts total

1) 5 for the 5 programmer "A" light sources. These are designated the "E" electronic trips.

2) 5 for the 5 programmer "B" light sources. These are designated the "F" electronic trips.

ix. Reactor Trip

aa. To trip all rods, one of the following breaker/electronic trip combinations must exist:

1) A&B breakers open

2) A&D breakers open plus "F" electronic trips

3) B&C breakers open plus "E" electronic trips.

4) C&D breakers open plus "E" and "F" electronic trips.

b. System Power Supplies

i. Redundant 24, ± 15 and 5 VDC power supplies

aa. Normally supplied by two vital buses; one set (24, ±15, 5) from each bus.

ii. 24 VDC

aa. System logic circuits

iii. 5 VDC

aa. Absolute and relative PI circuits

iv. ± 15 VDC

aa. System logic circuits

v. Each redundant pair has a set of blocking diodes on their output. When their outputs are equal, both provide an output in parallel. If their outputs become unbalanced due to a fault or drift, the diode at the output of the lower voltage supply becomes reversed biased, and its output is blocked. This prevents a fault in one supply from effecting the other supply or the downstream circuitry.

D. Position Indication

1. Absolute position indication

a. 45 equally spaced reed switches are mounted in a fiberglass housing, which is strapped to the outside of the motor tube. The reed switches are closed by a magnet attached to the torque taker. As the leadscrew moves up and down, this magnet passes by the reed switches. A reed switch will be held closed whenever the magnet is within 1½ inches (above or below) of it. (This sets the accuracy of the indication.) There are 4 groups of switches. One group continuously monitors position from 0 to 100%. The other three sets monitor position at certain specific intervals.

i. Analog PI

aa. These reed switches are connected to a voltage divider network. As the reed switches open and close (due to the magnet on the leadscrew), the resistance of the network changes. This varying resitance results in a variable current output from the network, which is then translated to position indication.

ii. In limit and 0% reed switches

aa. In limit is 1 inch above tripped position.

bb. 0% is 1½ inch above in limit.

iii. Out limit and 100% reed switches

aa. Out limit is 1 inch below mechanical out limit.

bb. 100% is 1½ inch below out limit.

iv. Zone reference switches

aa. 5 switches, located at 0, 25, 50, 75, and 100%

bb. Located in CRDM cabinet.

b. Mechanical stroke of rods is 141 inches. The electrical stroke, or distance between in and out limits, is 139 inches.

c. Applications

i. Individual PI on the PI panel.

ii. Group PI on meters

aa. 4 meters and selector switch monitors groups 1-4 or 5-8.

iii. Asymmetric rod

aa. Each rod in a group is compared with the group average. If a rod in a group deviates by more than 7 inches (5%) from the group average, an individual amber fault light for that rod will light on the PI panel. A rod which is

9 inches (6.5%) from its group's average will light the asymmetric fault light on the Diamond Panel (see asymmetric runback for additional information).

bb. It is important to remember that the faulted rod is included in the group average calculation. For example, suppose we drop a rod in a group which has 8 rods which are all initially 100% withdrawn.

$$\text{Group Average (Before drop)} = \frac{8(100)}{8} = 100\%$$

If we now drop one rod in the group:

$$\text{Group Average (After drop)} = \frac{7(100) + 0}{8} = 87.5\%$$

Since the group average has dropped to 87.5%, all the 7 inch fault lights for the group will come on. The rod on the bottom is 87.5% from the group average, and the rods which are still fully withdrawn are 12.5% from the group average.

iv. Group in and out limits

aa. The first rod in a group to reach its out limit will cause group out limit light on the Diamond Panel to light. The group out limit will prevent any additional out commands from reaching the programmer.

bb. The first rod in a group to reach its in limit will cause the group in limit light on the Diamond Panel to light. The group in limit will prevent any additional commands from reaching the programmer. This function may be bypassed with the Group 1-7 in limit bypass (latch) pushbutton on the Diamond Panel. For Group 8, no in motion is permitted when the latch pushbutton is depressed.

v. Bleed and Feed Permits

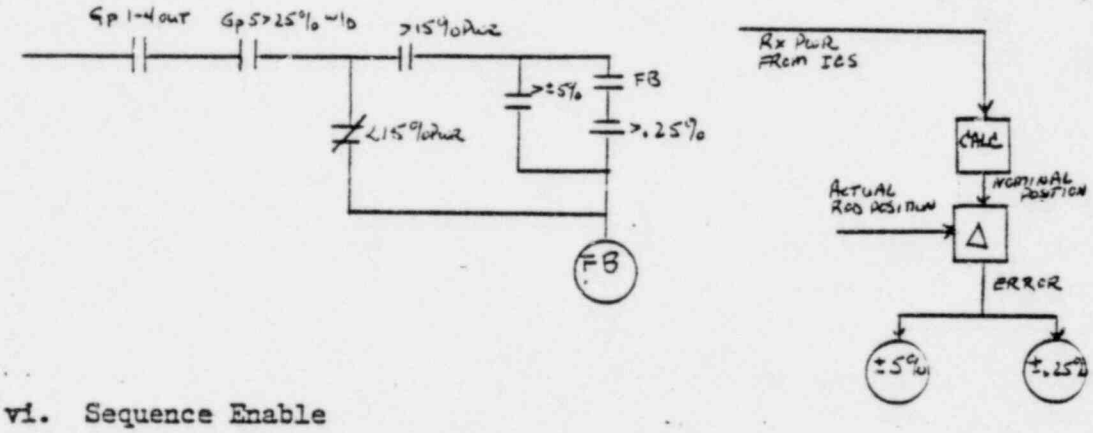

vi. Sequence Enable

aa. Regulating rod groups are normally operated with 25% overlap to allow more uniform reactivity insertion rates. This overlap is accomplished through the use of the sequence enable circuits.

1) Group 5 sequence enable (group 5 permitted to withdraw if)

a) safety rods out and:

(1) Gr. 6 & 7 < 25% withdrawn
(2) Gr. 5 > 75% withdrawn

2) Group 6/7 sequence enable (group 6/7 permitted to withdraw if)

a) safety rods out

b) group 5 > 75% withdrawn

vii. Inhibit Circuitry

aa. Group 1-4 out limits have input to both the auto inhibit and out inhibit circuits.

bb. Group 1-4 out limits must be lit to allow out commands to reach the programmers for groups 5, 6 and 7. This function may be bypassed with a keylock (safety rods out bypass).

2. Relative Position Indication

a. A pulse stepping motor is connected in parallel to the A, C and BB phases supplying each mechanism. As the phases are energized to cause rod motion, the stepping motor also turns. The motor drives a potentiometer which then produces a variable output corresponding to rod position. The system is extremely accurate, but only reflects rod position as a function of field rotation. Thus it will not show correct position if a rod is tripped or dropped, or if it is stuck or binding mechanically. In such cases it will be necessary to adjust the relative PI to agree with actual conditions. This is done with the reset pulser. An individual rod or rod group is selected with the group and single select switches, and the raise/lower switch on the PI panel is then used to adjust the indication. This is done by driving the selected rod or group of rods pulse

stepping motors with a pulsed 24 VDC signal in place of the normal 3 phase input.

b. Applications

i. Individual PI - PI panel. (Group average PI is calculated and used internally, but is not displayed.)

ii. Sequence monitor

aa. Checks the overlap between regulating groups.

bb. In the event of an assymmetric fault, the first priority of the system is to automatically reduce power to less than 60%. To ensure this, relative PI is used to monitor sequence faults. In the original design of the system a sequence fault reset the system to manual. If absolute PI was used, a dropped rod could have resulted in a sequence fault which would have defeated the runback by resetting the rods to manual. To prevent such an occurrance, relative PI was used, since relative PI does not respond to a dropped rod.

cc. The monitor only checks for too much overlap; i.e., one group moving in or out too soon in relation to the other groups.

1) based on $\Delta k/k$ insertion

2) the system does not consider too little overlap

dd. Checks for 25% overlap, only checks at discrete intervals.

iii. Bleed & Feed Permit Interlock

E. CONTROL CIRCUITRY

1. Rod motion is accomplished by converting either an automatic or manual command signal into motion of a programmer motor. The motion of the programmer ultimately results in the production of a rotating magnetic field, which causes rod motion. In this section we will examine the control circuitry involved in converting command signals to programmer motion.

2. The control circuitry flow path can be basically arranged as follows:

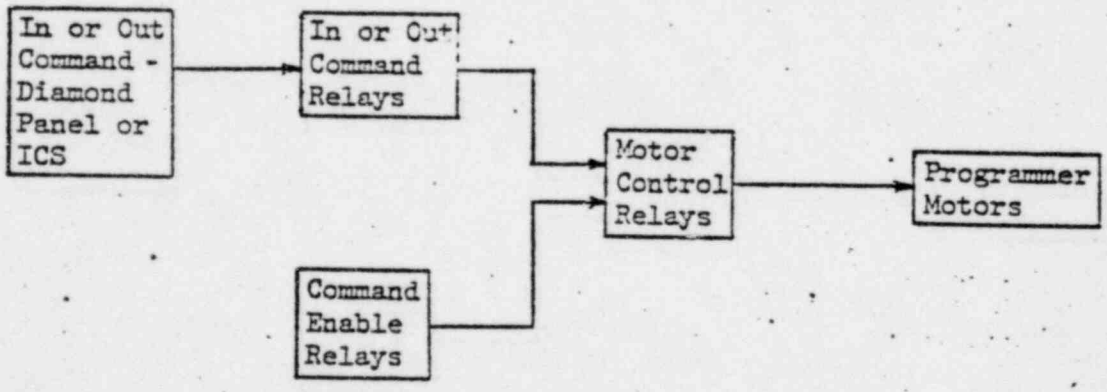

Both a command and a command enable (permit) must be present to cause programmer motion.

a. Command enable relays

i. There are two command enable conditions: auxiliary and group. For groups 1-4 only auxiliary enable is possible, since motion of these rods can only be accomplished by use of the auxiliary power supply. for groups 5-8 both auxiliary and group enable are possible, since the rods in these groups can be moved using either the auxiliary supply or the normal group supply. For an

auxiliary command enable to exist, a rod or group of rods must be lined up to the auxiliary power supply. This operation is performed using the transfer logic. For a group command enable to exist, the group must be lined up to its normal power supply.

ii. For groups 5-7 motion can be in either a sequence (25% overlap) or sequence override (no overlap) mode. For sequenced operation, sequence mode must be selected and a sequence enable condition must exist. Sequence operation can be performed either in manual or auto. Sequence override mode requires sequence override to be selected. This mode of operation is permitted only in manual.

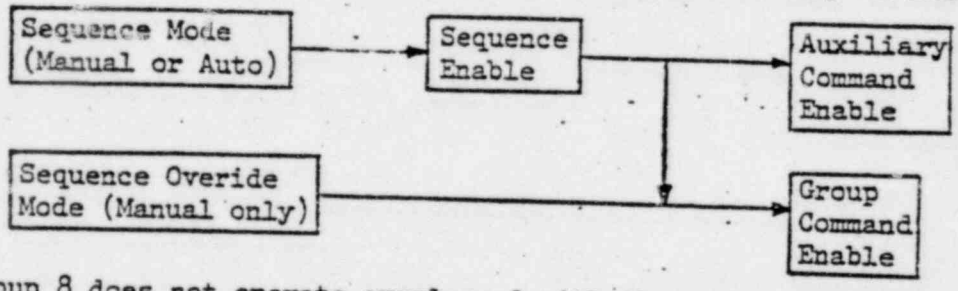

Group 8 does not operate overlapped with the regulating groups. When group 8 is group enabled either sequence or sequence override may be selected. When auxiliary command enabled, sequence override must be selected, but this is due only to requirements imposed by the transfer logic.

b. In and Out Command Relays

i. The group 1-7 out command relay is energized if:

aa. there is a manual or auto out command present

bb. there is no in command present

cc. there is no inhibit present

dd. not clamped

ee. for a manual out command, in addition to aa-dd,

1) manual mode selected

2) group 8 is not selected

ff. for an auto out command, in addition to aa-dd,

1) auto mode is selected

2) no auto inhibit

3) no out inhibit (auto)

ii. Group 1-7 in command

aa. not clamped

bb. manual or auto command present

cc. in manual, in addition to aa-bb,

1) group 8 not selected

2) manual mode selected

dd. in auto, in addition to aa-bb,

1) auto mode selected

2) no auto inhibit

iii. Group 8 out command

aa. manual command present (manual or auto mode selected)

bb. group 8 command enable (group or auxiliary)

cc. no group 8 in command

dd. no out inhibit

ee. not clamped

iv. Group 8 in command

aa. not clamped

bb. manual in command

cc. group 8 command enable (group 8 selected on group select switch)

c. Motor Control Relays

i. Group 5-7 group power supply:

aa. Out

1) group command enable

2) no group out limit

3) safety rods out (can be bypassed)

4) out command relay

5) for jog-out

a) jog speed selected

6) for run out

a) run speed selected

7) for group 7

a)

use 100% out limit.

bb. In

1) group command enable

2) no group in limit

a) bypassed automatically on dropped rod to allow runback

3) in command relay

4) for run in

a) run speed selected

5) for jog in

a) jog speed selected

ii. Group 8 group power supply

aa. Out

1) group command enable

2) no group 8 out limit

3) out command relay

4) for run out

a) run speed selected

5) for jog out

a) jog speed selected

bb. In

1) group command enable

2) in command relay

3) no group 8 in limit

4) not in limit bypassed (pushbutton)

5) for run in

a) run speed selected

6) for jog in

a) jog speed selected

iii. Group 1-4 auxiliary power supply

aa. In

1) not clamped

2) in command relay

3) auxiliary command enable

4) no group in limit

5) run or jog speed selected

6) jog in signal from transfer synchronizer bypasses 2-5

bb. Out

1) not clamped

2) out command relay

3) auxiliary command enable

4) no group out limit

5) run or jog selected

iv. Group 8 auxiliary supply

aa. In

1) not clamped

2) group 8 in command relay

3) auxiliary command enable

4) no group 8 in limit

5) no in limit bypassed

6) run or jog selected

7) jog in signal from transfer synchronizer bypasses 2-6.

bb. Out

1) not clamped

2) out command relay

3) auxiliary command enable

4) no group out limit

5) jog or run selected

v. Groups 5-7 auxiliary supply

aa. In

1) not clamped

2) in command relay

3) auxiliary command enable

4) jog or run selected

5) no group in limit (bypassed on dropped rod)

6) if in sequence

a) sequence selected

b) sequence enable

7) if in sequence override

a) sequence override selector

bb. Out

1) not clamped

2) out command relay

3) auxiliary command enable

4) no group out limit

5) jog or run selected

6) for sequence mode

a) sequence selected

b) sequence enable

7) for sequence override mode

a) sequence override selected

d. Programmer circuitry

i. 120 V ac ABT power is directed to the run or jog motors. To complete a circuit path to one of the motors, one of the following sets of conditions must be met.

aa. Run in

1) motor control relay for run in

2) no direction error present

bb. Run out

1) motor control relay for run out

2) no motor control relay for run in

3) no direction error

cc. Jog in

1) no direction error

2) no motor control relay jog out and jog in signal from 3-2 phase hold circuit; or

3) motor control relay for jog in and no motor control relay for run out.

dd. Jog Out

1) no direction error

2) motor control relay for jog out

3) no motor control relay for jog in

4) no motor control relay for run in

ee. DC brake is applied when

1) no motor control relay (in or out, jog or run)

2) no signal from 3-2 phase hold

3) 24 VDC applied automatically if normal 60 VDC brake is lost.

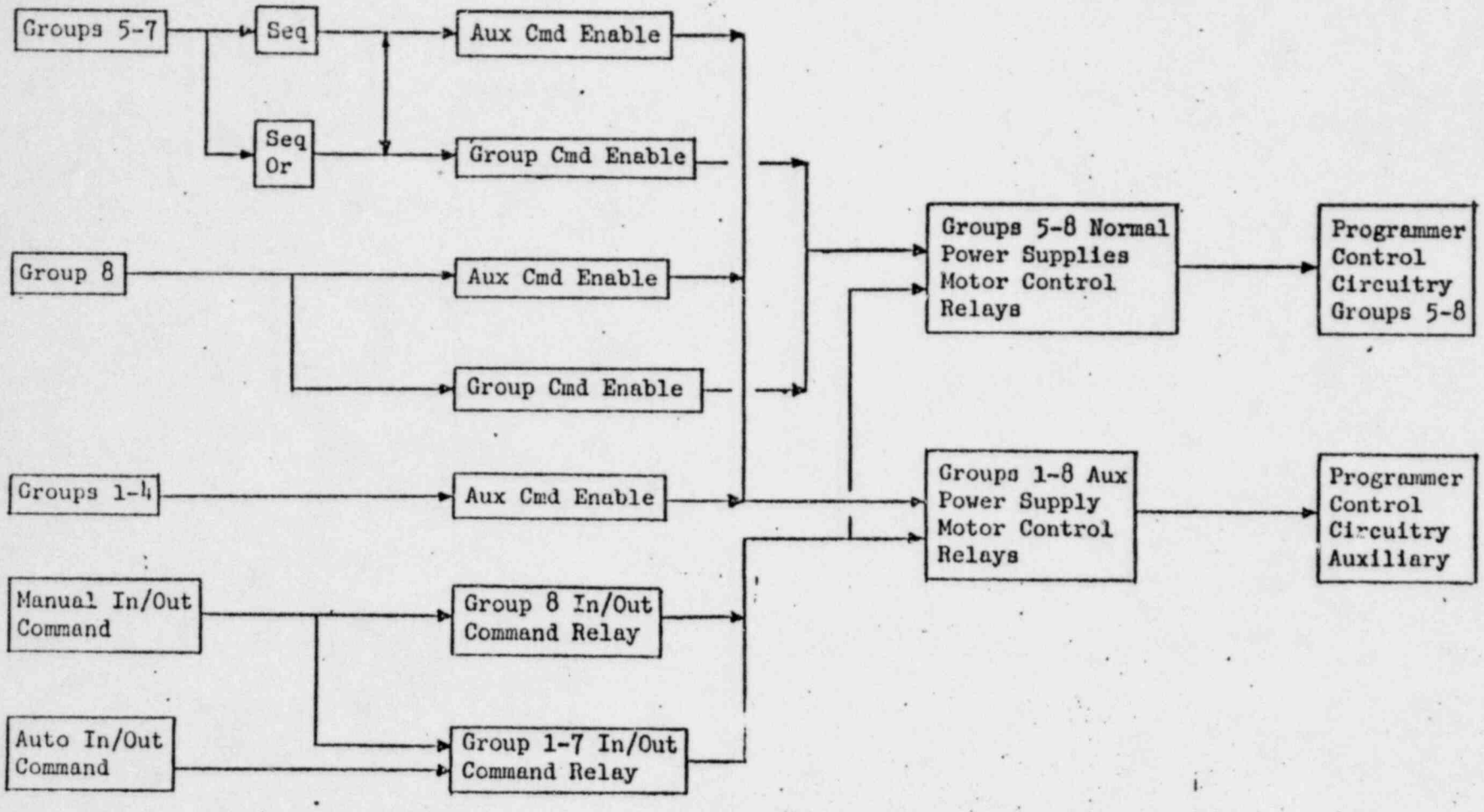
Groups 5-7
Seq
Seq Or
Aux Cmd Enable
Group Cmd Enable
Group 8
Aux Cmd Enable
Group Cmd Enable
Groups 1-4
Aux Cmd Enable
Manual In/Out Command
Auto In/Out Command
Group 8 In/Out Command Relay
Group 1-7 In/Out Command Relay
Groups 5-8 Normal Power Supplies Motor Control Relays
Groups 1-8 Aux Power Supply Motor Control Relays
Programmer Control Circuitry Groups 5-8
Programmer Control Circuitry Auxiliary

e. Transfer Logic

i. Sequence of transfer to or from auxiliary power supply

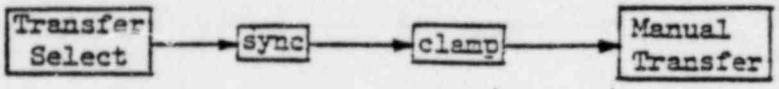

aa. Transfer Select

1) Transfer select relay for a group is energized if

a) sequence override

b) no other group is on the auxiliary power supply

c) manual

d) auxiliary

e) group selected (group select switch)

2) Once a group's transfer select relay is energized, the auxiliary contacts from that relay set up portions of the sychronizing circuit, clamping circuit and transfer circuit for that group. The relay also locks in the transfer circuitry for that group and the auxiliary command enable for that group. This lock in feature is cleared by the transfer reset button. Reset is only possible when group mode is selected and no rod or group of rods is on the auxiliary supply.

bb. Synchronizing circuit

1) Once the transfer select relay is energized, selecting jog speed will start the transfer synchronizer. The auxiliary supply will run in at jog speed until it matches phases (same phases energized) with the group's normal supply (or DC hold bus). This is done to prevent damaging the clamping contactors.

2) Once the power supplies are synched, the green synch light on the Diamond lights, and a permissive contact closes in the clamp circuit.

cc. Clamping circuit

1) The clamping contacts will close if

a) clamp pushbutton depressed

b) auxiliary

c) transfer select

d) synchronized

2) Pushing the clamp pushbutton energizes the group's clamping contactor control relay. This relay closes a contact, supplying 120 V ac to the group clamping relay, which places the two power supplies in parallel. At the same time, a permissive contact closes in the manual transfer circuit. Clamping is done to prevent possible damage to the transfer relays by equalizing the voltage on the two power supplies. Rod motion is not permitted when the power supplies are clamped together.

dd. Manual Transfer

1) Manual transfer permitted if

a) manual transfer pushbutton depressed

b) clamped

c) rod or rods selected (single select switch)

1) 1-12 or all.

2) Depending on the position of the single select switch, and 1 of up to 12 or all 12 rod select relays are energized. In conjunction with the transfer select relays, 1 or up to 12 of the 69 transfer control relays are energized. Each transfer control relay, by closing a contact, energizes its transfer switch, which shifts the position of the transfer contacts from the normal supply to the auxiliary supply or vice versa. When they shift to auxiliary, transfer confirm light lights; when they shift to normal, transfer confirm light goes out.

3) Clamping contacts are then opened by pressing clamp release, and transfer is complete.

ee. It is important to note here that the technical manual calls for group mode to be selected before any rod motion takes place. The auxiliary mode is only required during the transfer operation. Movement of the rods in jog speed while in auxiliary mode will cause unnecessary cycling of the transfer synchronizer.

ff. Transfer to or from the auxiliary supply requires the same sequence of steps, but when a transfer off the auxiliary supply is complete (transfer confirm light out), group should be selected and the transfer reset pushbutton pressed to clear the transfer logic. Transfer operations on any other group are impossible until this is done due to the lock in feature of the transfer select relays.

F. INDICATION

1. PI Panel

   a. PI indication

   b. 100% lights

   c. 0% lights

   d. 7 inch asymmetric fault lights

   } See PI section

   e. control on lights

      i. Groups 1-4

         aa. Lights on when transfer relays are lined up to the auxiliary power supply.

      ii. Groups 5-8

         aa. Transfer relays lined up to the auxiliary power supply; or

         bb. group command enable

2. Diamond Panel

   a. Trip Confirm

      i. Operates off breaker and electronic trip contact position.

         aa. Trip 1 - "A" breaker open

         bb. Trip 2 - "B" breaker open

         cc. Trip 3 - "C" breaker open and "E" electronic trips open

            1) 2 DC breakers, C_1 and C_2

            2) 5 electronic trips

               a) auxiliary power supply "A" light source

               b) group 5 power supply "A" light source

               c) group 6 power supply "A" light source

               d) group 7 power supply "A" light source

e) Group 8 power supply "A" light source.

dd. Trip 4 - "D" breaker and "F" electronic trips open

1) 2 DC breakers, D_1 and D_2

2) 5 electronic trips - the same as "E" except that the trips are on the "B" light sources.

ii. To get a trip confirm, one of the following conditions must exist:

1) trip 1 and trip 2 or

2) trip 3 and trip 4 or

3) trip 1 and trip 4 or

4) trip 2 and trip 3

iii. Trip confirm lights the light and sends a signal to the ICS.

aa. Reactor trip (track)

bb. Bypass valve setpoint

iv. A separate relay, operating on the same principle, called redundant trip confirm, sends a signal to the turbine trip circuit.

v. Trip 1 - also supplies RPS A for reactor and breaker trip indication

Trip 2 - also supplies RPS B

Trip 3 - also supplies RPS C

Trip 4 - Also supplies RPS D

b. Asymmetric rod

i. 9 inch deviation of a rod from that rod's group average (API)

ii. Formerly a lock in alarm (reset with fault reset). Field change to auto reset to minimize the size of the runback.

iii. Asymmetric rod runback - formerly only required a 9 inch fault, rods in auto and > 60% power. Spurious runbacks due to faulty PI necessitated a field change - inclusion of additional requirements for a runback.

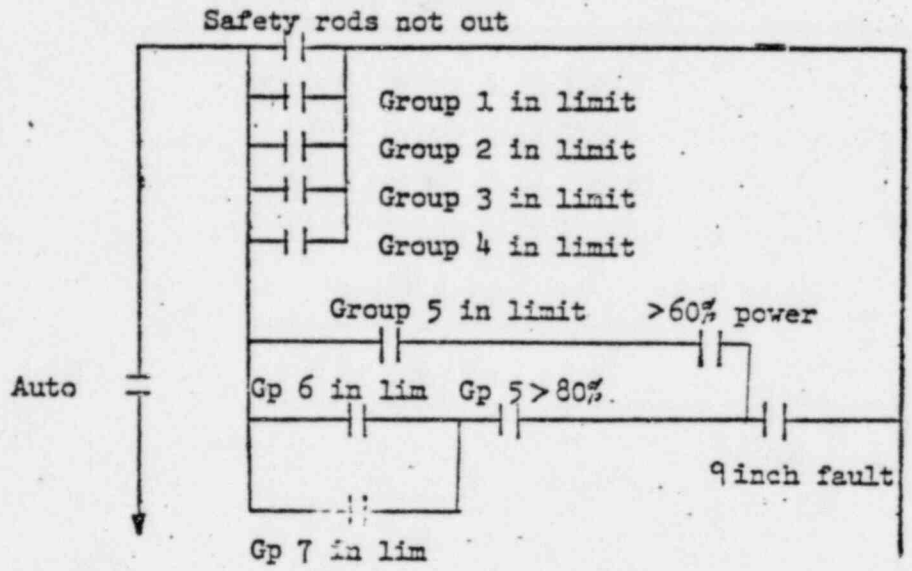

iv. As was discussed earlier, an in limit for a group will stop that group's in motion. This function must be overidden in the event of a dropped rod so that the group with the faulted rod can run back. This is accomplished by the fault bypass circuit.

aa. If the system is in auto and a 9 inch fault occurs, the fault bypass relay energizes, closing a contact which bypasses the group in limit contacts in the motor control circuitry.

bb. With the in limits bypassed, group motion inward is stopped by the sequence enable circuit; i.e., if group 6 is moving in and reaches the bottom with the in limits bypassed, group 6 in motion will stop when group 5 reaches less than 75%

withdrawn.

v. As was discussed earlier, sequenced operation requires safety rods out. In the event of a dropped safety rod, this feature must be bypassed to allow a sequenced runback.

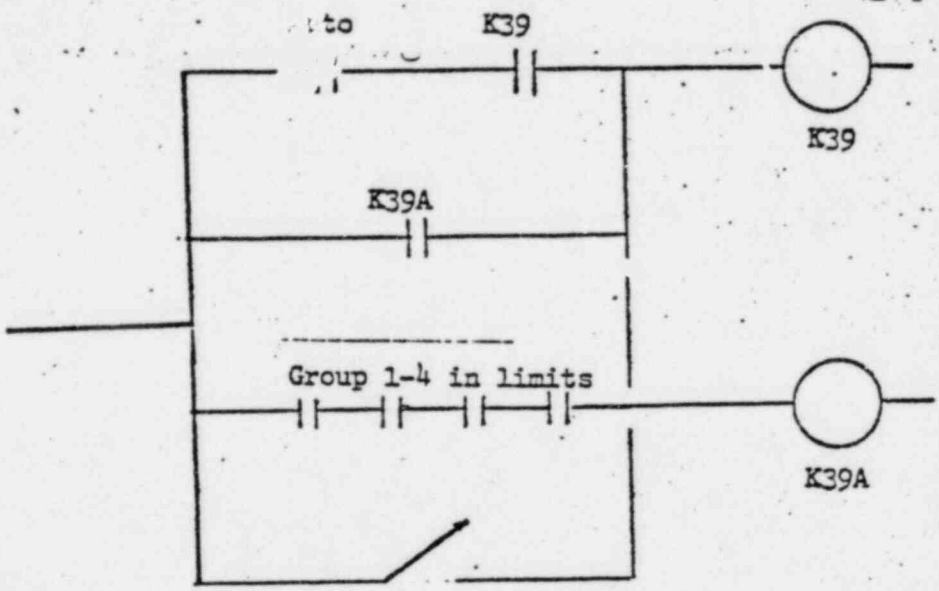

Safety rods
out bypass

With the safety rods not withdrawn, the bypass switch can be used to allow rod withdrawal. This switch does not bypass the safety rods out permit for feed and bleed.

aa. If the safety rods are withdrawn, K39A energizes, closing a contact which energizes K39. Once the system is in auto K39 is locked in. Thus, losing a safety group out limit when in auto will not cause a loss of sequence enable. Once the system is shifted to manual , however, the bypass switch must be used, since both K39 and K39A will drop out under these conditions.

vi. The asymmetric fault for a rod may be bypassed by use of a switch located in that rod's PI cabinet. This switch eliminates that rod from being used in the asymmetric fault detection circuitry.

c. Motor Fault

i. any motion with no command

ii. out motion with an in command

iii. loss of 120 V ac ABT bus

iv. resets system to manual

v. lock in - cleared with fault reset

vi. operation

aa. The circuit is electro-mechanical

1) contacts for commands

2) direction sensed by switches which are closed by actual motion of the programmer.

3) time delay required to allow for inherent delays between command and motion and for the 3-2 hold circuit.

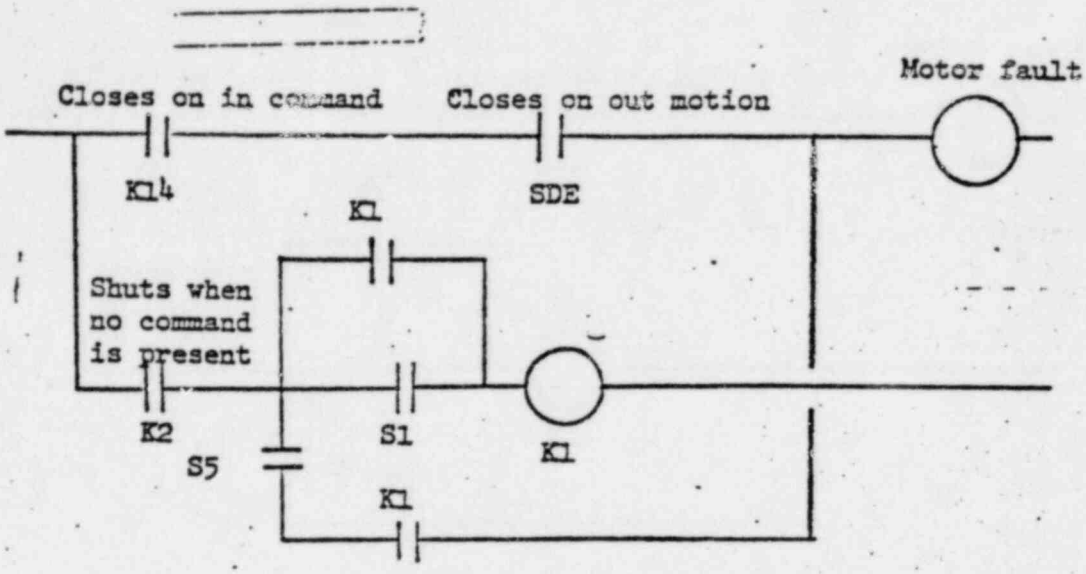

S1 and S5 close when a magnet on the programmer passes by them. Programmer must rotate far enough to close both S1 and S5.

SDE is a switch that will close on out motion, and will stay closed until in motion occurs.

d. Out Inhibit

i. 2 out inhibits

aa. 2 DPM SUR in source range, 3 DPM in intermediate range will impose an out inhibit in either auto or manual.

bb. If >60% power and either the safety rods are not out or a 9 inch asymmetric fault exists, an out inhibit will be imposed while in auto.

e. Sequence inhibit

i. Lights if a sequence fault occurs. A field change has removed the reset to manual function (not at Crystal River). It also turns off the sequence light on the sequence/sequence override pushbutton.

ii. If the system is in sequence override and a sequence inhibit exists, the system cannot be placed in sequence.

f. Auto inhibit

i. Lights and prevents placing the system in auto if:

aa. > 1% neutron error, or

bb. the safety rods are not out, or

cc. ICS auto power is not available.

ii. On loss of ICS auto power, lights and the system shifts to manual.

g. Programmer lamp fault A and B

i. Relays in series with programmer light sources from 24 VDC power supplies.

aa. Failure of any of the 5 programmers' A light source will light the A lamp fault.

bb. Failure of any of the 5 programmers'B light source will light the B lamp fault.

cc. Lights on reactor trip due to electronic trips.

ii. Lock in - requires fault reset.

h. Out limit Lamps Groups 1-8

i. First rod out in a group lights the out limit, which prevents any further out motion.

aa. Can drop a rod in a group without losing out limit.

bb. Additional material in PI and control circuitry sections.

i. Control on Lamps

i. Groups 1-4

aa. Light will light for a group if the transfer select and auxiliary commands enable relays are energized. This requires:

1) Sequence override

2) auxiliary

3) manual

4) group selected

5) no other rod(s) on auxiliary power supply

These relays will lock in after the above conditions are satisfied. Once they lock in, 1-5 are no longer required.

ii. Groups 5-8

aa. Auxiliary command enable and transfer select or

bb. Group command enable.

iii. These lights do not tell us that motion will result if a command is sent to that group; only that certain portions of the control circuitry logic are satisfied.

j. In limit Lamps Group 1-8

i. The first rod in a group to reach the in limit lights the light, which prevents further in motion.

ii. This function can be bypassed with the latch (in limit bypass) pushbutton. This directly bypasses the in limit circuitry by opening the output of Groups 1-7 in limit amplifiers. With the latch pushbutton depressed, in motion of Group 8 is prevented.

k. System Power Supplies A and B

i. As mentioned earlier, the system utilizes redundant 24, ±15 and 5 VDC power supplies fed from vital buses, with an auctioneered output for each pair. If one of a pair becomes blocked, the system power supply light for that side extinguishes. There are two possible ways to lose both lights:

aa. If both redundant halves fail; i.e., both 24 or ±15 or 5 VDC.

bb. If we lose the A side 24 VDC and the B side 5 VDC, for example.

ii. Fault reset required to relight the lamp after we regain the power supply.

l. Motor Power Supplies A and B

i. The relay for the lamp on each side is in series with a voltage regulator overheat switch, a power on relay, DC hold supply blower failure and 5, 6, 7, 8 and auxiliary power supply blower failure. A failure of any of the above will de-energize the lamp relay and extinguish that side lamp.

ii. Power on Relay

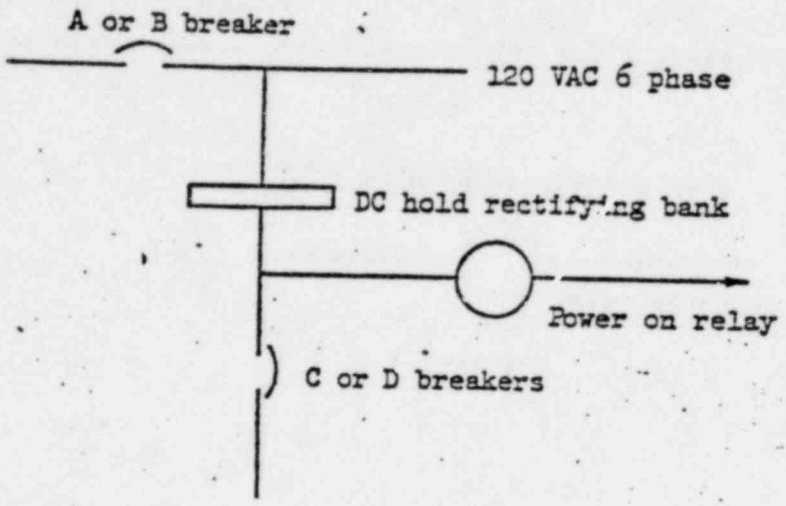

The relay will only drop out if the Main AC breaker is opened on that side.

iii. Requires Fault Reset

m. In/Out Command Lights

i. Indicates that the Group 1-7 in or out command relay is energized. This does not mean that actual rod motion is taking place.

n. Group Select Switch

i. Used in sequence override mode for operation of Groups 1-8 (command enable)

ii. In sequence mode, used for operation of group 8.

iii. Used in transfer logic (transfer select)

iv. Used for relative PI reset.

o. Single Select

i. Used for manual transfer circuitry

ii. Used for relative PI reset.

iii. Used for the operation of a single rod or a group of rods on the auxiliary power supply.

iv. Has no function during operation with normal group power supplies.

p. Speed Select

i. Used with transfer circuitry for the synchronizing circuit (jog selected).

ii. Selects rod speed when in manual.

aa. Run - 30 inches per minute

bb. Jog - 3 inches per minute

iii. When in auto, rod speed is 30 inches per minute regardless of position of speed selector.

q. Group position select

i. Selects 1-4 group averages or 5-8 group averages for display on PI meters, or 5, 6/7, 6/7, 8 if in Sequence.

r. Latch pushbutton

i. Bypasses in limits

ii. Lights when depressed and Group 1-7 in limit lights will extinguish.

s. Transfer Reset

i. Clears the transfer logic and resets transfer lockouts when in group and there is no transfer confirmed (no rods on the auxiliary supply).

ii. Lights when depressed.

t Fault Reset

i. Clears

aa. asymmetric fault (some plants)

bb. motor fault

cc. out inhibit

dd. programmer lamp faults

ee. motor supply faults

ff. system supply faults.

ii. Resets electronic trips when groups 1-7 are not on the bottom (trip reset disarmed)

iii. Lights when depressed.

u. Safety rods out bypassed

i. Lights when the safety rods out bypass key switch is in the bypass position.

v. Trip reset

i. When the Group 1-7 in limits are present, resets A,B,C and D breakers and the E and F electronic trips. Once reset, this will remove bypass valve bias and allow the turbine trip lockout to be reset.

ii. On the newer plants the A and B breakers may require a local reset plus trip reset to close.

iii. Lights when depressed.

w. Manual Transfer

i. If clamped, will actuate the manual transfer control relays.

ii. Lights when depressed.

iii. Sync light - lights when the auxiliary power supply is synchronized with another power supply.

iv. Transfer confirmed light - lights when a rod or group of rods are on the auxiliary power supply.

x. Sequence/Sequence Override

i. The sequence light extinguishes only when a sequence fault is present. When sequence override is selected, both lights will normally be lit.

ii. Sequence override mode is only permitted when in manual.

iii. Resets to sequence on a trip.

y. Group/Auxiliary

i. Must be in manual to go to auxiliary.

ii. Auxiliary is selected only during a transfer operation; rod motion should always be done in group mode.

iii. Resets to group on a trip.

z. Auto/Manual.

i. Resets to manual on:

aa. reactor trip

bb. motor fault

cc. Loss of ICS auto power

aa. Clamp/Clamp Release

i. clamp requires sync

2. either clamp or clamp release lit

SECTION 3

DESCRIPTION AND PRINCIPLES OF OPERATION

3.0 INTRODUCTION

The system logic and the motor control equipment including 69 drive mechanisms form a control rod drive system for a central station pressurized water reactor. The system logic controls rod grouping, rod motion, rod position, and provides the logic circuits necessary to command the motor control equipment. The motor control equipment provides power to drive the rod mechanisms.

The control rod drive system translates the reactor control signal - either manual or automatic - to linear motion of the control rods. Although the primary function is to control the nuclear chain reaction, the system serves an equally important function with respect to the reactor protective system. Upon initiation of a reactor trip signal, power is removed from the drive mechanisms, causing the control rod assemblies to disengage from the mechanisms and fall by gravity into the core, thereby reducing neutron activity to a point where the heat generated by the core decreases to an acceptably low level.

3.1 CONTROL ROD DRIVE CONTROL SYSTEM DESCRIPTION AND PRINCIPLES OF OPERATION

The control rod drive control system utilizes 69 control rod drive mechanisms, one for each control rod assembly. The mechanisms are divided into eight separate groups. Each group corresponds to a symmetric arrangement of control rods with respect to the plant view of the core; up to 12 control rods may be assigned to any one group. The control rods will normally be moved together as a group, but provisions are made to control individual rods within a given group.

The first four groups are referred to as safety groups. During periods when the reactor is being operated, they are maintained at their full-out position. Their functions are to provide an adequate shutdown capability upon reactor trip. Groups 5, 6 and 7 are the regulating groups and are used to establish criticality and to control the power output of the core. During a reactor startup, Groups 1 thru 4 will be withdrawn to the full-out position (100% withdrawn). At this point, upon the command of the Integrated Control System, the withdrawal of Group 5 is started. The regulating groups are normally withdrawn in sequence; that is, when Group 5 reaches a specified position, it will enable Group 6 and 7 to start withdrawing. Group 6 and 7 are two separate groups which normally move in parallel but can be moved separately. The sequencer allows the groups to overlap only during the first and last 25% of travel. The safety groups are controllable in the manual

mode only. The regulating groups are controllable from either manual or automatic inputs. Group 8 is controlled manually in either manual or automatic mode. Group 8 is used to control the axial flux distribution in the core. The automatic mode of control is the normal mode when the reactor is operating at power.

Because the safety groups are normally held in their full-out position, they are powered from a static D.C. power supply (one that does not have the ability to move the rods, but only to maintain (hold) a given position). The power supply is referred to as the D.C. hold supply. Each of the other groups has its own individual supply, and each is programmable. That is, they respond to inputs from the control system to maintain or change the positions of control rods associated with those respective groups. When it becomes necessary to control the movement of the safety groups, an auxiliary controllable supply is used. Provisions are made to prevent more than one group from being driven off the auxiliary supply at any one time. This is because the auxiliary is not designed to handle more than 12 coincident mechanism loads. Single or multiple combinations of rods within any one group may also be moved by the auxiliary supply. The clamping contactors and transfer relays are used in making transfers to and from the auxiliary supply.

The patch panels allow any drive except those in Group 8 to be assigned to any group. This is done by exchanging the power and instrumentation leads associated with that drive. In this way, core life may be extended by exchanging certain control rods between, or within, the safety and regulating groups.

3.1.1 Mechanisms

The mechanism itself is an electro-mechanical device consisting of an electrically driven, rotating nut assembly (rotor) within the primary coolant pressure boundary; a four-pole, six-phase stator outside the pressure boundary; and a translating leadscrew that converts rotary motion of the nut to linear travel of the leadscrew and the attached control rod assembly.

Each control rod drive mechanism is associated with a control rod assembly. The control rod assembly spider is attached to the leadscrew extension shaft by means of a breachlock-type connector. Each control rod assembly consists of 16 small rods arranged symmetrically about the center of the assembly.

The leadscrew is the connecting link between the rotor assembly and the control rod. When the rotor assembly rotates, the leadscrew is kept from rotating by keying it to the torque tube through the torque taker. The leadscrew travels along the vertical centerline of the drive. In it's travel the leadscrew passes through the torque tube, the rotor assembly, and the thermal barrier. The leadscrew is connected and disconnected from the control rod assembly by rotating it (the leadscrew) within the motor tube from a point external to the drive.

The control rod drive mechanism is used to raise, lower, and maintain control rod position in response to the control rod drive motor control system. The control system provides a sequentially programmed D.C. input to the drive motor. The motor has seven input leads, one for each phase of the six-phase star-connected winding and one for the neutral return line. The stator coils are sequentially energized in a repetitive 2-3-2-3 manner to produce a rotating magnetic field around the rotor assembly. As the stator coils are progressively energized, the rotor rotates (steps) to orient itself to a new position. This rotary motion is translated into linear motion of the leadscrew and the attached control rod. Two speeds are available: "run" and "jog". Run corresponds to 30 inches per minute and jog to 3 inches per minute.

During a power loss to the mechanism, the rotor assembly segment arms pivot, releasing mechanical contact between the roller nuts and the leadscrew. The attached control rod drops by gravity into the core. Interruption of power to the mechanism may be initiated manually or (from the reactor protective system) automatically.

3.1.2 P.I. Tube

The position indicator assembly (P.I. Tube) determines the absolute position of the leadscrew and therefore the control rod. A series of 45 equally spaced reed switches is mounted on the outside of the upper motor tube. A square fiberglass housing encloses the reed switches. As the magnet mounted on the torque taker passes in the immediate vicinity of the switch, the magnetic field is strong enough to actuate the switch. As the magnet continues on past, the reed switch returns to its normally open position.

The indicator switches may be divided into four groups:

1. The in-limit and 0% switches - The in-limit switch is actuated between 0.12 and 1.00 inch above the tripped position. The 0% switch is located 1.5 inches above the in-limit switch. Each switch is adjustable (at the drive) over the first 2 inches of travel.

2. The out-limit and 100% switches - The out-limit switch is actuated between 139.75 and 140.25 inches above the tripped position. The 100% switch is mounted 1.5 inches below the out-limit switch. Each of these is also adjustable within the last 2 inches of travel.

3. Five absolute (zone reference) switches at 0, 25, 50, 75, and 100% travel - These are actuated at 0 to 0.13, 34.75 ± 0.25, 69.50 ± 0.25, 104.25 ± 0.25, and 140.00 ± 0.25 inches.

4. An analog (API) output corresponding to leadscrew (control rod) position over the full travel - This indication is derived from the sequential opening and closing of reed switches which, in turn, are connected to a resistor network. The accuracy of this system is within ± 1.5 inches.

Two switches are used at the out and in-limit positions (1 and 2 above); one indicates that a particular control rod is nearing its full-out position, and the other stops further out-travel. The first rod in any group to reach the second switch will stop further travel of all rods in that group.

3.2 SYSTEM LOGIC BLOCK DIAGRAM ANALYSIS, Figure 3-48

For system analysis, the system logic is broken down into nine (9) functional areas as follows:

1. Command Logic Circuits
2. Transfer Logic Circuits
3. Travel Out Limit Logic Circuits
4. Travel In Limit Logic Circuits
5. CRDM Position Reference Circuits
6. Inhibit-Fault Logic Circuits
7. Position Indicator Circuits
8. Sequence and Dilute Control Circuits
9. Position Indicator Reset Circuits

3.2.1 Command Logic Circuits

The command logic circuits control the movement of the control rods either by the operator in the manual mode or by the Integrated Control System (ICS) in automatic mode. The control rods are divided into 8 groups, a maximum of twelve rods in each group. Groups 1 thru 4 are called the Safety Groups, and are controlled in the manual mode only. Groups 5 thru 7 are the Regulating Groups and can be controlled in either manual or automatic mode. Group 8, the Axial Power Shaping Rods (APSR), can be controlled manually in either manual or automatic mode. The command logic provides signal to indicators to display system status. The command logic also provide signals to other control logic in the system and signals to customer equipment providing system status information.

3.2.2 Transfer Logic Circuits

The transfer logic circuits provide control of any group or single rods as selected by the operator in the manual mode. The safety groups which are normally held by the DC Hold Supply, can be transferred to and from the auxiliary regulating supply for manual control. The regulating groups, each group having a separate regulating supply, can be transferred to and from the auxiliary supply for either manual or automatic control. Group 8 (APSR) has its own regulating supply and can be transferred to and from the auxiliary regulating supply.

3.2.3 Travel Limit Logic Circuits

The travel limit logic receives signals from the control rod drive, in limit (0% withdrawn) and out limit (100% withdrawn). These signals are used to inhibit the movement of the control rod drives at the two extremes. The limit signals are also applied to other control logic circuits for various other functions.

3.2.4 CRDM Position Reference Circuits

0, 25, 50, 75 and 100 percent withdrawn reference signals are received from the CRDM's and enable indicators that correspond to the respective positions.

3.2.5 Inhibit/Fault Logic Circuits

The inhibit/fault logic circuits provide inhibit (inhibits rod movement) and fault indications under certain operating conditions. The inhibit and fault signals are sent to the control panel, position indication panel and customer equipment: Reactor Protection System/Nuclear Instrumentation (RPS/NI), Integrated Control System (ICS), Plant Computer, or Plant Annunciator.

3.2.6 Position Indication Circuits

The position indication circuits use the absolute position indication (API) signal from the control rod drives to display the control rod drive position on the position indication (P.I.) panel. The API signal is also sent to an averager to produce a group average signal. The relative position

Dig. Monitor

indication signal (RPI) is also averaged (for Groups 5-8 only) to provide a group average signal for fault detection. The RPI signal may also be displayed on the P.I. panel.

3.2.7 Sequence Circuit

The sequence circuit controls the regulating groups in the sequence mode. The regulating groups are enabled or disabled, when the groups are at predetermined position levels.

3.2.8 Feed and Bleed Circuits

Three (3) feed and bleed signals are applied to the ICS for dilute control: the safety groups fully withdrawn, regulating Group 5 equal to or greater than 25% withdrawn and a 0 to +5 volt analog signal of regulating Groups 6 and 7 average P.I.

3.2.9 P.I. Reset Circuits

The P.I. reset circuits are used to select and reset the relative position indication transducer to the same level as the API signal after a reactor trip or similar condition occurs.

3.3 MOTOR CONTROL BLOCK DIAGRAM ANALYSIS

3.3.1 Channel A AC Motor Power Circuits

The channel A AC Motor power circuits are used to monitor and interrupt the 480 AC power when certain conditions exists. They also provide reactor trip signals to the turbine controls and motor control 120 VAC power.

3.3.2 Channel B AC Motor Power Circuits

The channel B AC motor power circuits are identical to the Channel A AC motor power circuits.

3.3.3 Control AC Power Circuits

The control AC Power circuits are the two control power transformers located in each of the AC breaker cabinets. The outputs of the transformers are used to power the blowers, gate drives, programmer circuits, transfer control circuits, and group meters.

3.3.4 Auxiliary and Group 5-8 Regulating Supplies

The regulating supplies are a programmable SCR DC motor power supply designed to run a six-phase synchropulse stator. Each regulating supply has a redundant half, regulating supply A and regulating supply B. Each supply is auctioneered or share the output load under normal operating conditions. If one of the supplies is in need of repair, it can be shutdown and the redundant half will carry the entire load until the repairs can be made.

3.3.5 DC Hold Supply Circuits

The DC hold supply is a non-programmable diode DC supply designed to hold the safety groups at one desired position. Since the control rod drive needs only one phase to hold at one position, the DC hold supply redundant halves have a single phase output. The DC hold supply A or B can be shutdown independently for repairs without hindering normal reactor operation.

3.3.6 Transfer and Motor Output Circuits

The transfer circuits provide control of the motor output power. They are primarily used in the manual mode. The transfer circuits have a patching capability to allow any control rod drive to be in any group except for Group 8. Group 8 is permanently patched. Motor output circuits are fused, six-phase DC power to the synchropulse stators.

3.3.7 Relative Position Indication Circuits

These circuits provide 69 relative position indications (RPI) to the system logic position indicator circuits. The RPI signals are produced from the CRDM motor power signal received from the motor output circuits. The RPI circuits are reset by the system logic P.I. reset circuits.

3.3.8 Programmer and Programmer Control Circuits

The programmer circuits provide the desired pulse sequence to drive the SCR regulating supplies for the DC power to the control rod drive's synchropulse stator. The programmer control circuits provide the control of the programmer for the required speed and direction of the control rod drive.

3.3.9 Trip and Trip Reset Circuits

The trip circuits provide a remote means of interrupting the motor power by either the operator or the RPS. During a trip, the AC motor power into the regulating supplies is interrupted by the AC breakers; the DC motor power from the DC hold supply is interrupted by the DC breakers; and the electronic trips de-energize, interrupting the SCR gate output to prevent inadvertent firing of the SCR's. The system must be reset by the operator before power can be restored to the system.

3.4 CONTROL ROD DRIVE CONTROL SYSTEM DETAILED DESCRIPTION AND PRINCIPLES OF OPERATION

The following paragraphs describe component parts of the control rod drive control system, commonly known as "black box" description and principles of operation.

3.5 CONTROL PANEL, Figure 1-1

The control panel contains the MANUAL CONTROL (insert/withdraw) switch, related indicators, and control switches. The function of the panel may best be described by identifying and explaining the function of each indicator and/or control.

The TRIP CONF lamp, when on, indicates that at least the minimum number of devices required to trip (de-energize) the CRDMs have actuated. See Page 3-31

The ASYMM RODS lamp, when on, indicates that one or more rods within a particular group are more than 9 inches (nominally) out of alignment with the group average position. The individual asymmetric lamps on the P.I. panel indicate that a rod is more than 7 inches (nominally) out of alignment with its group average position. fig 3-22 & 3-17 for amps.

The MOTOR FAULT lamp, when on, indicates that one or more of the programmer motors is running when not commanded or is running in reverse of command.

The GROUP 6 / 7 FAULT, when on, indicates that Group 6 is 8 inches (nominally) misaligned with Group 7. figure 3-17 shows a lamp.

The OUT INHIBIT lamp, when on, indicates that the CRDMs will not respond to OUT commands. This may be caused by the "high startup rate" input signal or by an asymmetric rod fault and/or safety rods not withdrawn fault while the system is in automatic and power level is greater than 60%.

The SEQUENCE INHIBIT lamp, when on, indicates that the regulating groups cannot be controlled in the sequence mode. The sequence monitor circuits provides a control input for this indication.

The AUTO INHIBIT lamp, when on, indicates that control cannot be switched to automatic because: (1) the safety groups are not at the out-limit or (2) Auto Permit signal from the ICS is not present. If the system were in AUTO mode, it would revert to MANUAL mode when the AUTO INHIBIT light came on.

The PROGRAMMER LAMP FAULT A lamp, when on, indicates that one or more of the five regulating power supply programmers has lost its redundant photocell light sources (A and B correspond to the redundant halves).

The PROGRAMMER LAMP FAULT B lamp monitors the B channel.

The APSR BYPASS lamp, when on, indicates that the input signals of the Group 8 (APSR) have been removed from the Group 8 averager. This is for partial group control. figure 3-17 shows switches

The OUT LIMIT, SAFETY GROUPS, REGULATING, and APSR lamps (Group 1 thru 8, left to right) when on, indicate that at least one rod out of its respective group is at the out-limit.

The IN LIMIT, SAFETY GROUPS, REGULATING, and APSR lamps, (Groups 1 thru 8, left to right) when on, indicate that at least one rod of a particular group is at the in-limit.

The SYSTEM, MOTOR, POWER SUPPLIES, (A left, B right) indicate the following: SYSTEM - the system logic power supplies are operating normally. MOTOR - the blowers and the voltage regulators are operating normally.

The CRD TRAVEL IN and OUT lamps, when on, indicate that an in or out command has been directed to one of the safety or regulating groups. This includes automatic as well as manual commands. It does not indicate commands associated with Group 8 because Group 8 may be moved manually while the control system is in the automatic mode.

The IN LIMIT BYPASS (LATCH) switch and lamp when pressed disables all group-in limits except Group 8 to allow the CRDMs to be inserted against the lower hard stop, thereby ensuring positive engagement between the roller nuts and the leadscrew. The lamp comes on to indicate the in limit bypass relay K54 is energized.

The TRANS RESET switch opens the holding circuit to the group select relays, thus allowing a different group to be selected for transfer to the auxiliary supply. It may be reset only if the auxiliary supply is not being utilized by another group (the transfer confirm lamp must be off). The TRANS RESET lamp is on to indicate that all group transfer enable circuits are in their normal state (not transferred).

The FAULT RESET switch resets a fault condition provided the fault has cleared. The faults may be asymmetric rods, motor fault, out-inhibit, programmer lamp fault A or B, or system power fault A or B. The lamp comes on to indicate fault reset relay K58 is energized.

The SAFETY RODS OUT BYPASS lamp comes on when the safety rods out bypass keylock switch on the rear of TRAVEL LIMIT LOGIC chassis is in the BYPASS position. The pushbutton switch is not activated.

The TRIP RESET switch resets the AC Breakers, DC Breakers, Programmer Controls, and the Electronic Trips. The IN-LIMIT lamps for Groups 1 thru 7 must be on. The TRIP RESET lamp comes on to indicate trip reset relay K57 is energized.

CAUTION

Excessive cycling of the trip breakers with the trip reset switch may shorten breaker life.

The MAN TRANS switch, when pressed, will transfer individual rods or a group of rods to and from the auxiliary supply. It will not function unless clamp is indicated. The SY lamp, when on, indicates that the auxiliary supply is in phase synchronism with either D.C. hold supply or one of the regulating supplies, as applicable. The TR CF lamp, when on, indicates the transfer switch has rotated for the selected rod or rods to the auxiliary supply. The MAN TRANS lamp comes on momentarily, to indicate the manual transfer control relay K110 was energized.

The SEQ-SEQ BYP switch, when pressed to indicate sequence override, permits selection of the desired group for transfer to the auxiliary supply. This switch also permits Groups 5, 6, and 7 to be operated manually out of sequence. Sequence bypass is not possible in the automatic mode. When in the sequence mode, it permits automatic or manual control of Groups 5, 6 and 7 in sequence.

The GROUP-AUXIL switch is used to enable or disable the group select logic in the transfer logic. When in group mode, it is not possible to manually select and transfer the CRDMs. To be in auxil, the system must be in manual and when in auxiliary mode it is possible to manually select and transfer the CRDMs.

The AUTO-MANUAL switch selects automatic or manual control. To select automatic mode, the trip, motor fault, sequence inhibit and auto inhibit lamps must be off. Once automatic is selected a trip, motor fault, sequence inhibit or auto inhibit will revert the system mode to manual. It is possible to select manual mode at any time. The lamps come on to indicate system mode of operation.

The CLAMP-CLAMP REL switch is an alternate action switch, whereas all of the previous pushbutton/indicators are momentary actions. It is used to energize and de-energize the clamping contactors that cross-connect the output of the auxiliary supply with the output of one of the four regulating supplies or the DC hold supply. It will not go into clamp unless synchronism is indicated. The white CLAMP lamp comes on to indicate CLAMP switch mode and the amber CLAMP lamp comes on to indicate clamp confirm relay K121 is energized. The white CLAMP REL lamp indicates CLAMP REL switch mode and the green CLAMP REL lamp comes on to indicate clamp confirm relay K121 is de-energized.

The SPEED SELECTOR (JOG-RUN) switch controls the rotational speed of the optical disc at the programmer, which, in turn, controls the linear speed of the control rod. Jog and run correspond to 3 and 30 inches per minute. If the speed selector is left in jog with the automatic control mode selected, the control rods will still move at run speed. Jog speed is not possible in automatic mode.

The GROUP POSITION SELECTOR SAFETY, REGULATE switch selects the group average (absolute) position indication display at the GROUP METER. Four separate readouts are available at any one time: the four safety groups (1 thru 4) or the three regulating groups (5 thru 7) and the APSR group (8).

The INSERT, WITHDRAW switch provides an in or out command signal to the programmer motor with the manual control mode selected, resulting in control rod motion. It is used to control any group in manual mode and Group 8 only with control in the automatic mode.

The SINGLE SELECT SWITCH is used to select individual rods within a group for transfer to the auxiliary supply. It is used in conjunction with the manual transfer switch. Single select is also used with the relati[illegible].I. reset pulser to adjust the relative P.I. indication.

The GROUP SELECT SWITCH selects groups for control or for transfer. Control of Groups 5 thru 7 using their group power supplies is possible by rotating the group select switch to the desired position with sequence-bypass and manual selected. Group Select is also used to select the desired group while resetting the Relative Indication Signal.

3.6 POSITION INDICATOR PANEL, Figure 1-2

A position indication meter is provided for each control rod on the P.I. panel and is mounted directly in front of the main console. The meter indicates rod position in units of percent withdrawn. The vertical-scale (edgewise) meters are arranged horizontally, 69 in a row, for convenient comparison at a distance. For group identification purposes, there are provisions for identifying rod groups containing as few as one or as many as 12 rods. The patch arrangement at the P.I. patch panel orients all groups and rods within a group in ascending order, sequentially from left to right on the panel. Associated with each meter are IN LIMIT and OUT LIMIT lamps for that particular mechanism, a CONTROL ON lamp, and an ALARM lamp.

Two switches are also mounted on the P.I. panel: One (ABSOL, REL POSITION SELECT) is used to select either absolute or relative readout on the panel display (there should be no significant difference in rod position when moving from relative to absolute or vice versa). The second switch (POSITION RESET RAISE, LOWER) controls the reset pulser, which is used to return the relative P.I. to zero following a trip or otherwise artificially change the relative P.I. readout. The reset pulser is used in conjunction with the group and single select switches at the operator panel.

The IN LIMIT and OUT LIMIT lamps are controlled by the absolute position switches corresponding to 0 and 100% in the P.I. tube. The CONTROL ON lamps indicate that a group of mechanisms or a single mechanism has been transferred (transfer confirm) and is ready to be controlled manually, or that Groups 5 through 8 are under control and may be raised or lowered, either automatically (AUTO mode) or manually (MANUAL mode). The individual alarm lamp indicates an asymmetric alarm, which means that a rod is more than 7 inches out of alignment with the average position of all the rods in its associated group.

3.6.1 Control Diode Gates, Figure 1-2

Twelve CONTROL DIODE GATE plug in modules numbered 1 thru 12 are located on the rear of the P.I. panel. Numbers 1, 2, and 3 contain press-to-test isolation diodes for the OUT LIMIT lamps. Numbers 4, 5, and 6 contain press-to-test isolation diodes for the CONTROL ON lamps. Numbers 7, 8, and 9 contain press-to-test isolation diodes for the IN LIMIT lamps. Numbers 10, 11, and 12 contain press-to-test isolation diodes for the ALARM lamps.

3.7 GROUP METERS, Figure 1-3

Four group average meters are used to display the group average position signal. A two-position (SAFETY-REGULATING) selector switch (GROUP POSITION INDICATION SELECT) on the control panel selects the four safety groups (1-4); or in the SEQ BYP mode groups 5, 6, 7, and 8. In the SEQ mode, the two center meters display the Group 6 and 7 average signal.

3.8 REACTOR TRIP SWITCH, Figure 1-4, 9-7

The reactor trip switch, located on the operator console, is a four channel, spring loaded, normally closed, guarded, press to open switch. When the switch is pressed, the CRDM motor power is interrupted. Channel 1 interrupts power at the A.C. Breaker A (TRIP 1). Channel 2 interrupts power at the A.C. Breaker B (TRIP 2). Channel 3 interrupts power at the D.C. Breaker CB1 (Ø A1, Ø A2), the D.C. Breaker CB2 (Ø A3, Ø A4) and relays K1 and K2 in each of the Auxiliary and Groups 5 thru 8 Electronic Trips (TRIP 3). Channel 4 interrupts power at the D.C. Breaker CB3 (Ø CC1, Ø CC2), D.C. Breaker CB4 (Ø CC3, Ø CC4) and relays K4 and K5 in each of the Auxiliary and Groups 5 thru 8 Electronic Trips (TRIP 4).

3.9 SYSTEM LOGIC CABINET NO. 1, Figure 1-5

The system logic cabinet No. 1 contains the transfer logic circuits. Detailed descriptions of the transfer logic components located in his cabinet are contained in the following paragraphs:

3.10 TRANSFER SELECTOR ASSEMBLY, Figures 3-1, 9-2

There are two transfer selector relay assemblies in system logic cabinet No. 1. The assembly in the right side contains transfer selector relays K1 thru K36 and the assembly in the left side contains transfer selector relays 37 thru 69. The relays are patched into groups and rods within groups and, when energized, supply 140 VDC from the transfer pulser to the transfer switches in the transfer cabinets. The selector relays are energized when the GROUP SELECT SWITCH is positioned to the group of mechanisms to be transferred and the SINGLE SELECT SWITCH is positioned to either a single mechanism or all mechanisms in the group selected to be transferred and when the system is in the MAN mode, SEQ BYP, AUXIL mode, JOG speed, and CLAMP mode.

3.11 TRANSFER LOGIC, Figures 3-2, 9-2

The transfer logic assembly contains the relays that make up the transfer logic control circuits, and control the transfer of a group of rods or a single rod, to and from the auxiliary regulating supply. It also contains the transfer confirm diode gates.

3.11.1 Transfer Reset

After a rod or a group of rods has been transferred from the auxiliary supply, the transfer logic circuits must be reset. This is accomplished by pressing TRANS RESET switch S8 on the control panel. This applies +24 volts through closed contacts of de-energized transfer confirm relay K55 (in the command logic) to the unlatch coils of group transfer select relays K101 thru K108 and group select lockout relay.

This places these relays in the unlatch mode and inhibits relay K109 until a group is selected for transfer. Contacts of the relays K101-K108 inhibit clamp control relays K1-K12, the transfer synchronizer , and transfer selector relays K1 thru K69. A set of latch contacts for relays K101-K108 is used in the command logic circuits to inhibit the CONTROL ON lamps for the eight groups. A set of unlatch contacts for relays K101-K108 is used in the command logic circuits to enable the lock-in function of the command transfer relays.

3.11.2 Group And Single Select

The GROUP SELECT SWITCH on the control panel selects the group to be transferred. The group transfer select relay (K101 thru K108) when selected will latch if in the manual, auxiliary, and sequence override modes of operation.

One mechanism select transfer relay (K161 thru K172) is energized when selected by the SINGLE SELECT SWITCH, and clamp confirm relay K121 is energized. All relays are energized when SINGLE SELECT SWITCH is in the ALL position, and K300 is energized.

3.11.3 Synchronizing

The synch relay K56 energizes when it receives a synch confirm signal from the transfer synchronizer synch relay K10. Energizing K56 enables the clamping contactor lock-out relay K120.

3.11.4 Clamping

The clamping contactor lock-out relay K120 energizes when the CLAMP-CLAMP REL switch on the control panel is pressed while synch relay K56 is energized. This enables the selected clamping contactor control relay K1 thru K12 on the clamping contactor control relay assembly in system logic cabinet No. 1.

3.11.5 Transfer

The manual transfer control relay K110 energizes when the MAN TRANS switch on the control panel is pressed, and the clamp confirm relay K121 is energized.

3.11.6 Control Diode Gate.

Control diode gate DG-1 contains transfer confirm isolation diodes CR1 thru CR24 for transfer switches 1 thru 24. Control diode gate DG-2 contains transfer confirm isolation diodes CR1 thru CR24 for transfer switches 25 thru 48. Control diode gate DG-3 contains transfer confirm isolation diode CR1 thru CR21 for transfer switches 49 thru 69. Refer to Figure 9-1.

3.12 CLAMPING CONTACTOR SELECTOR ASSEMBLY, Figures 3-3, 9-2

The clamping contactor selector assembly contains clamping contactor selector relays K1 thru K12, which are energized when they are selected by the GROUP SELECT SWITCH on the control panel, and the CLAMP-CLAMP REL switch is pressed while synch relay K56 is energized.

Relays K13 and K14 are automatic bus transfer relays (ABT-2) and are used to maintain 120 VAC power to energize the clamping contactors. AC BUS NO. 1 is the main source of power and in the event BUS NO. 1 fails the load will transfer to BUS NO. 2. If either K13 or K14 fails, the load transfer to BUS NO. 2 and PL3 comes on. PL1 and PL2 remains on as long as power is on BUS NO. 1 and BUS NO. 2.

3.13 TRANSFER SYNCHRONIZER ASSEMBLY, Figures 3-4, 9-1, 11-6

The transfer synchronizer is used to compare the states of the motor phase outputs A, B, C, AA, BB, CC of the Regulating Power Supplies or A and CC phases of the D.C. Hold Power Supply to the Auxiliary Power Supply motor phase outputs and verify that they are identical to the phase relationship output of the Auxiliary Regulating Power Supply. It is not possible to transfer unless the Auxiliary Supply is synchronized with the selected group supply (Regulating or D.C. Hold).

The transfer synchronizer compares the output motor phase relationship between the selected Regulating or D.C. Hold Power Supply and the Auxiliary. In the event a difference exists in the output phase relationship, the transfer synchronizer signals the Auxiliary Power Supply programmer motor to drive in the INSERT direction at jog speed until the output phases are matched. When the motor phase outputs are matched, a synchronous signal is supplied to the operator panel. The signal is a verification that CLAMP can now be effected for transfer.

3.14 AUTOMATIC BUS TRANSFER ASSEMBLY, Figures 3-5, 9-2, 11-6

The ABT assembly located in the rear of system logic cabinet No. 1 (hereafter referred to as ABT-1) operates as follows. Bus No. 1 and Bus No. 2 are connected to TB1 and TB2, respectively. Output is on TB3. At normal state Bus No. 1 energizes the voltage relay (1V) through N.C. test switch. Its contact also energizes the Transfer Switch (TS) from Bus No. 1. Output in normal state is Bus No. 1. At loss of Bus No. 1, the voltage relay de-energizes thus opening circuit to transfer switch. The normal contacts of the transfer switch open and the emergency contacts close, placing Bus No. 2 at the output. Test switch S1 is used to check the ABT and to manually switch buses if repair on one bus is required.

3.15 SYSTEM LOGIC CABINET NO. 2, Figure 1-5

Detailed descriptions of the components located in this cabinet are contained in the following paragraphs.

3.16 VITAL-REGULATED BUS CIRCUIT BREAKER PANEL, Figures 3-6, 9-8

This panel provides circuit protection and power indication for VITAL BUS NO. 1 (CB2 and PL2) and REGULATED BUS (CB1 and PL1). VITAL BUS NO. 1 feeds power to Logic Supply "A", Power Supply Panel, and the Transfer Pulser. The REGULATED BUS feeds power to Logic Supply "B", +15B power supply, -15B power supply, and +5B power supply.

3.17 METER PANEL, Figures 3-7, 9-9

The six panel ammeters monitor the system neutral current. The total system neutral current is the sum of all six meters. The ammeters offer a method of visually monitoring any system unbalance. The ammeters are connected to the Transformer neutral shunts located in the D.C. return lines of the "A" and "B" Power Transformers. The three meters on the left side of the panel (M1, M2 and M3) are connected to Transformer A and the right side (M4, M5 and M6) connected to Transformer B.

3.18 VOLTAGE REGULATOR CONTROLS, Figures 3-8, 9-9

Two variable transformers are used to adjust the reference voltage supplied to the Voltage Regulator A and B voltage sensing circuitry. The reference is used to raise or lower the Voltage Regulator output to maintain a fixed phase-to-neutral output voltage to the "A" and "B" power transformers.

Once the variable transformers are properly adjusted, the shafts are locked in place to prevent accidental changes. Adjustment is required only during initial start-up. Adjust CW to increase voltage; CCW to decrease voltage.

3.19 POWER SUPPLY PANEL, Figures 3-9, 9-8

The power supply panel contains precision power supplies for the RPIs. For a detailed description of the 0-20 VDC power supply, refer to vendor manual, D.C. POWER SUPPLY, MODEL 2005A, POWER DESIGN INC. For a detailed description of the +15 VDC and -15 VDC power supplies, refer to vendor manual, D.C. POWER SUPPLY MODEL 3D15 - 1.2, POWERTEC.

3.20 LOGIC SUPPLY, Figures 3-10, 9-8

The +24 volt power supply receives 120 VAC at the primary of transformer T1. Transformer T1 has a center tapped secondary and diodes CR1 and CR2 provide full wave rectification. Resistors R1-R4, capacitors C2-C5, and inductor L1 provide the necessary filtering. Capacitor C1 and a secondary winding of T1 form a resonant circuit with the tapped secondary. This circuit provides regulation by saturating the core [illegible] The +[illegible] volt output is applied through a D.C. circuit breaker to an undervoltage relay coil and to a switching diode. If the D.C. output falls below 18 volts, the undervoltage relay drops out. Contacts of the relay are used in the inhibit-fault logic circuits to provide a fault indication. Diodes CR3 and CR4 are used to automatically select between the +24 volt outputs of the two 24 volt supplies. The power supply having a slightly higher output is the controlling supply and the diode at the output of the other supply is reverse biased. If the controlling supply fails, the other supply assumes the load. The output voltage is displayed on OUTPUT VOLTS meter M2 and the current is displayed on OUTPUT AMPS meter M1.

3.21 TRANSFER PULSER, Figures 3-11, 9-1, 11-11

The transfer pulser provides a 140 VDC, 110 ms pulse to actuate the motor power transfer switches when a 24 VDC transfer function signal is received from the system logic.

Power supply PS-1 provides a +24V output which is applied through R9 and CR4 to forward bias SCR-1, when the Darlington common collector Q3 and Q4 is turned off. When Q3 and Q4 is turned on, the positive gating signal for SCR-1 is shorted to ground through the emitter of Q4.

Zener diodes, CR1 and CR2; the Darlington common collector, Q1 and Q2; and their associated components provide +12V regulated power for the integrated circuits.

The +24V transfer function signal is applied to pin 1 of photon-coupled isolator IC1. Output "1" is applied to pin 1 of nor gate IC2A, and reset "0" is applied to pin 2. The 110 ms time delay circuit, (R6, P1, C3), discharges through IC2A pin 3 to ground, (IC2 pin 7), as IC2A output goes to "0". The "1" at pin 5 of IC2B goes to "0" for 110 ms and creates a 110 millisecond "1" pulse at the output of IC2B pin 4.

The output of IC2B then is applied to two places. First it is inverted twice by IC2C and IC2D to place a "1" at the base of Q3. The Darlington common collector turns off which in turn fires SCR-1. Secondly, the output of IC2B is applied to the 3.5-second time delay reset circuit C4 and R7, C4 charges and bleeds off through R7, placing a "1" at pin 1 of IC3A for 3.5 seconds. IC3A inverts the "1" to "0" and IC3B inverts the "0" back to a "1" again, placing a "1" on pin 2 of IC2A. The "1" is inverted to "0" by IC2A and holds C3 at ground potential, (discharged). After 3.5 seconds, the reset time delay has bled off making both inputs to IC2A "0" and the output a "1". C3 then recharges and is ready to be discharged again.

3.22 +24 VDC CIRCUIT BREAKER ASSEMBLY, Figures 3-12, 9-8

The +24 VDC circuit breakers apply +24 VDC power to the system logic components as follows: CB10 to the COMMAND LOGIC; CB11 to the TRANSFER LOGIC; CB12 to the INHIBIT FAULT LOGIC and SYSTEM MONITOR; CB13 to the P.I. RESET LOGIC; CB14 to the TRAVEL LIMIT LOGIC and POSITION REFERENCE panels.

3.23 W-2 NEUTRAL BUS, Figures 1-5, 9-8

The vertical bus bar in system logic cabinet number two is a common tie point for the system logic neutrals, grounds and returns to hold them at one potential. The cabinet grounds and earth ground are connected here for safety. W-2 is also connected to the P.I. return buses W-1 in SL7 and SL8.

3.24 SYSTEM LOGIC CABINET NO. 3, Figure 1-5

Detailed descriptions of the components located in this cabinet are contained in the following paragraphs.

3.25 TRAVEL LIMIT LOGIC, Figures 3-13, 9-3

The travel limit logic chassis contains in limit relays K16 thru K23 for Groups 1 thru 8; out limit relays K24 thru K31 for Groups 1 thru 8; relay drivers for K16 thru K31; safety rods out control relay K39, safety rods out limit relay K39A, in limit bypass relay K54, and the press-to-test isolation diodes for IN LIMIT and OUT LIMIT lamps on the control panel.

3.25.1 In Limit Logic

In limit relays K16 thru K23 energize when one rod in each group reaches an in limit. When each relay (K16 thru K23) energizes it opens contacts in the command logic circuits to stop the insert command for each Group 1 thru 8. Pressing the IN LIMIT BYPASS (LATCH) switch on the control panel energizes in limit bypass relay K54 which in turn de-energizes K16 thru K22 to permit the rods to insert far enough to ensure positive engagement between the leadscrew and roller nut. When the switch is released, K16 thru K22 energize again and stop the insert command.

3.25.2 Out Limit Logic

Out limit logic relays K24 thru K31 energize when one in each group reaches an out limit. When each relay (K24 thru K31) energizes it opens contacts in the command logic circuits to stop the withdraw command for each Group 1 thru 8. Safety rods out limit relay K39A is energized when out limit relays K24 thru K27 are energized.

3.25.3 Safety Rods Out Bypass

When K39A is energized, it energizes control relay K39. K39 may also be energized by the safety rods out bypass keylock switch on the back of the travel limit logic chassis. K39 may hold itself energized through a set of its own contacts while the system is in the automatic mode of operation. This permits the Integrated Control System to insert the regulating rods to obtain a 60 percent reactor power level should one of the safety groups drop.

3.25.4 Relay Drivers

Relay drivers for the in limit relays are on module RD-1 and are forward biased by a +24 VDC signal from the in limit signal from the CRDMs. RD-2 is identical to RD-1 and contains the out limit relay drivers.

3.25.5 Synchronize At Out Limit Relay K40, Figure 9-1

While withdrawing one of the safety groups on the auxiliary supply, normally closed contacts of K40 enable the command withdraw circuits past the out limit, until the phase BB motor power signal energizes K40 through normally open contacts of the command transfer and out limit relays of the particular group being withdrawn. Energizing K40 opens the normally closed contacts and disables the withdraw command.

In run speed, the programmer motor will stop on phases CC, BB, and AA, and the 3-2 hold circuit will drive the motor inward to phases CC, BB and then stop. Now, the safety group is prepared to synchronize, (by driving inward only one phase to CC, A), without danger of losing out limit when transferring back to the DC hold supply.

In jog speed, the safety group will stop on phases BB, CC, and A, and drive back to CC and A. Being synchronized to the DC hold supply, the safety group is ready for transfer.

NOTE

In jog speed, remove the withdraw command by releasing the insert-withdrawn handle on the system logic control panel. Otherwise K40 will energize again and drive the group outward to BB, CC, and A, and the 3-2 hold will drive the group back inward to CC, A causing oscillation at the out limit.

3.26 COMMAND LOGIC, Figures 3-13, 9-1

The command logic circuits control the withdrawal and insertion of the regulating groups (Groups 5 thru 7) either automatically or manually. The command logic circuits allow manual control of the safety groups (Groups 1 thru 4) after the groups have been transferred from DC hold to the auxiliary regulating supply. In addition, the command logic allows manual control of APSR group (Group 8) when system is in automatic mode.

3.26.1 Withdraw And Insert Command

The regulating and auxiliary groups command circuits receive 120 VAC voltage from the 120 VAC Power Distribution panel in the DC Hold Supply. The 120 VAC passes through the command logic and energizes the withdraw and insert relays in the programmer control, if certain system logic conditions (assuming no faults) are met:

1. Before the regulating Groups 5, 6 & 7 can withdraw sequencially, safety Groups 1 thru 4 must be at their out limit.

2. No groups can withdraw past its out limit.

3. No group can insert past its in limit, except when in the in limit bypass mode, (Group 8 excepted).

4. For manual operation, a group and/or rod(s) may be selected and moved in the SEQ BYP mode. In the SEQ mode, only groups may be moved and only in sequence (safety groups excluded, see step 6).

5. The in or out command relays must be energized by the ICS or INSERT-WITHDRAW switch on the control panel.

6. The safety groups must be transferred to auxiliary supply in order to move.

7. Before Groups 5, 6, and 7 will withdraw and insert in the automatic mode, the system must be in the group, sequence, and automatic modes of operation.

NOTE

The groups will move at the speed selected, RUN or JOG, except Groups 5, 6, and 7 which will move at RUN speed only, while in the automatic mode of operation.

3.26.2 Group Select Switch

Allows selection of any group to be transferred to the auxiliary supply while in the sequence bypass, manual and auxiliary modes.

Allows selection for control of any Groups 5, 6, or 7 while in the sequence bypass, manual and group modes.

Allows selection for manual control of Group 8 while in either manual or automatic modes, sequence or sequence bypass modes and in group mode.

3.26.3 Transfer Lockout

Transfer lockout relays K99 and K9 prevent the transfer of more than one group to the auxiliary supply. Two relays are used for a time delay to ensure the selected command transfer relay has time to lock-in through a set of its on contacts.

3.26.4 Automatic Mode

Setting the AUTO-MAN switch S15 on the control panel to the AUTO mode energizes the unlatch coil FF of relay K11A, which closes contacts to energize K11B. Releasing switch S15 energizes unlatch coil N. Energizing coil N enables the relay for the change back to the manual mode. Energizing K11B, completes the automatic out command circuits by energizing relays K15A and K15B when the following relays are closed: out inhibit relay K33, auto inhibit relay K34, out inhibit relay K32. The in command circuits are completed by contacts of auto inhibit relay K34 and contacts of K11B to in command relays K14A and K14B. Energizing K11B also closes contacts to signal the plant computer and ICS, respectively, that system logic is in the automatic mode.

3.26.5 Automatic Run Out

Relay K5B is energized through contacts of relays K35B (sequence-sequence bypass), K85 (Group 5 sequence enable), K89 (sequence fault), and K10B (group-auxiliary). Energizing K5B closes contact 12, which is in the regulate out (run out) circuit. Energizing K5B also closes contacts to turn on REGULATING CONTROL ON lamp (on the control panel) and closes contacts to couple +24 volts through diode gate (13) to turn on Group 5 CONTROL ON lamps on the P.I. panel.

The command logic receives an automatic out command from the ICS that is applied through the contacts of relays K34, K33, K11B, K14A, K14B, and K53 to energize out command relays K15A and K15B. Energizing K15A and K15B closes contacts of both relays, which completes the circuit for the 120 VAC from the programmer control through relays K5B, K28 (Group 5 out limit), K15A, K15B, and K12 (jog-run) to energize regulate out (run out) relays K6 and K12. Energizing K6 and K12 starts Group 5 mechanisms to begin withdrawing.

Energizing relays K15A and K15B also closes contacts of both relays to turn on the CRD TRAVEL OUT lamp on the control panel.

When Group 5 reaches the 75 percent level, contacts of K87 (controlled by automatic sequencer circuits) close and energize relays K6B and K7B. Energizing K6B and K7B closes contacts which applies 120 VAC through the contacts of K29 (Group 6 out limit relay) and K30 (Group 7 out limit relay), K15A, K15B, and K12 to energize regulate out relay K6 and K12 in the programmer control assemblies of Group 6 and Group 7 regulating supplies. Energizing K6 and K12 starts Group 6 and Group 7 mechanisms to withdraw. Contacts of K23 (Group 5 out limit) open when Group 5 mechanisms reach the out limit, stopping Group 5 withdraw motion.

Energizing K6B and K7B also closes contacts to turn on regulating groups CONTROL ON lamps for Group 6 and Group 7 on the control panel, and closes to supply +24 VDC through diode gates to turn on Group 6 and Group 7 CONTROL ON lamps on the P.I. Panel.

Contacts of K85 open when Group 6 and Group 7 mechanisms reach a level greater then 26 percent, de-energizing K5B. Group 5 will reach its out limit at approximately the same time that Group 6 and 7 reaches the 26 percent level. De-energizing K5B opens contacts to remove 120 VAC from the programmer control insert and withdraw circuits. Also, contacts open to turn off CONTROL ON lamp on the control panel and contacts open to turn off the Group 5 CONTROL ON lamps on the P.I. Panel.

When the automatic out command from the ICS is removed from the command logic, relays K15A and K15B de-energize. De-energizing K15A and K15B opens the circuits to the regulate out relays K6 and K12 in each of the programmer control assemblies for Groups 5 thru 7. Also, contacts of both relays open to turn off CRD TRAVEL OUT lamp on the control panel.

3.26.6 Automatic Run In

The command logic receives an automatic in command from the ICS that is applied through the contacts of K34 and K11B to energize the in command relays K14A and K14B. Energizing K14A and K14B applies 120 VAC from the programmer control assembly through contacts of K6B, K21, K14A or K14B, and K12; contacts of K7B, K22, K14A or K14B, and K12 to energize the regulate in relay K5 of the programmer control assemblies of Group 6 and Group 7 regulating supplies respectively. Energizing both K5 relays starts Groups 6 and 7 to insert.

Energizing K14A and K14B closes contacts of both relays to turn on CRD TRAVEL IN lamp on the control panel. REGULATING GROUPS CONTROL ON lamp on the control panel remains on through contacts of energized K6B and K7B for Group 6 and Group 7 respectively. The CONTROL ON lamps on the P.I. Panel for Group 6 and Group 7 remain on through contacts of K6B and K7B respectively.

When Group 6 and Group 7 insert below the 25 percent level, contacts of K85 (controlled by automatic sequencer circuits) close and energize K5B. Energizing K5B closes contacts to supply 120 VAC from the Group 5 regulating supply programmer control assembly through contacts K20, K14A or K14B, and K12 to energize regulate in relay K5. Energizing K5 start Group 5 mechanisms to insert.

Energizing K5B also closes contacts, turning on REGULATING GROUPS CONTROL ON lamp on the control panel and closes contacts to supply +24 VDC through diode gates to turn on Group 5 CONTROL ON lamps on the P.I. Panel.

Contacts of K21 (Group 6 in limit relay) and K22 (Group 7 in limit relay) open when Group 6 and Group 7 reaches its respective in limit, de-energizing K5 in the programmer control assemblies stopping group 6 and Group 7 from inserting.

When Group 5 descends below 74 percent level, contacts of K87 open and de-energize K6B and K7B. De-energizing K6B and K7B opens contacts to remove 120 VAC from the insert and withdraw circuits to the programmer controls assemblies in Group 6 and Group 7 regulating supplies, respectively. De-energizing K6B and K7B opens contacts that turns off the REGULATING GROUPS CONTROL ON lamps and contacts open to turn off the CONTROL ON lamps for Group 6 and Group 7 on the P.I. Panel.

Contacts of K20 open when Group 5 reaches its in limit, de-energizing relay K5 in the programmer control assembly to stop Group 5 from inserting. Should the automatic in command from the ICS be removed from the command logic during the insertion of Group 5, relays K14A and K14B, will de-energize. De-energizing K14A and K14B open contacts of both relay to de-energize relay K5 in the Group 5 programmer control assembly to stop inserting Group 5. Also, contacts of both K14A and K14B open to turn off CRD TRAVEL IN lamp on the control.

REGULATING GROUPS CONTROL ON lamp on the control panel remains on through contacts of K5B with Group 5 at its in limit position. Relay K5B remains energized through contacts of K5A, contacts of K35B, contacts of K85, contacts of K89 and contacts of K10B.

3.26.7 Group 8 Withdrawal

Group 8 withdrawal is accomplished manually. GROUP SELECT switch on the control panel is set to 8, energizing relays K8B and K8C. Energizing K8B closes contacts to complete the circuit from the MANUAL CONTROL switch to the Group 8 out command relays K158A and K158B. Also, contacts close, enabling the insert and withdraw circuit.

Energizing K8C closes contacts to turn on APSR CONTROL ON lamp on the control panel and closes contacts to supply +24 volts through diode gates to turn on Group 8 CONTROL ON lamps on the P.I. Panel.

Positioning the MANUAL CONTROL switch to WITHDRAW applies +24 volts through the contacts of relays K8B, K148A, K148B, and K32 to energize Group 8 out command relays K158A and K158B. Energizing K158A and K158B closes contacts of each relay to supply 120 VAC from the programmer control through the contacts of K8B, K31, K158A, K158B, and K12 to energize K6 and K12 in the programmer control. Energizing K6 and K12 starts Group 8 mechanisms to begin withdrawing. Contacts of relay K31 open when the Group 8 mechanisms reach the out limit, stopping the out motion.

3.26.8 Group 8 Insertion

Manual insertion of Group 8 is accomplished by moving the MANUAL CONTROL switch on the control panel to INSERT, applying +24 volts through contacts of K8B to energize Group 8 in command relays K148A and K148B. Energizing K148A and K148B supplies 120 VAC from the programmer control through contacts of K8B, contacts of either K148A or K148B, and contacts of K54, contacts of K23, and contacts of K12 to energize regulate in relay K5 in the programmer control. Energizing K5 starts Group 8 to inserting.

Contacts K23 open when Group 8 reaches the in limit, de-energizing relay K5 and stopping the movement of the group. GROUP SELECT switch on the control panel is set to OFF, de-energizing relays K8B and K8C. De-energizing K8B opens contacts, removing the 120 VAC from the insert and withdraw circuits for Group 8. Contacts of K8B open to break the circuit between the MANUAL CONTROL switch and Group 8 in command relay K148A and K148B.

De-energizing K8C opens contacts to turn off APSR CONTROL ON lamp on the control panel and opens contacts to turn off the CONTROL ON lamps for Group 8 on the P.I. panel.

3.26.9 Operation of Regulating Groups In Manual Mode

Group 5 thru 7 operate from the regulating supply the same way as in manual mode only if the system is in manual and sequence-bypass modes so only a description for Group 5 will be presented.

NOTE

Group 5 and Group 6 & 7 will withdraw and insert in sequence, in response to the automatic sequencer, if the system is left in sequence mode.

GROUP SELECT SWITCH S1 on the control panel is set to 5. SEQ-SEQ BYP switch S13 is pressed to the SEQ BYP position, energizing the unlatch coil FF of relay K35A which closes contacts of energize relay K35B. Releasing SEQ-SEQ OR switch energizes unlatch coil N of K35A. Energizing unlatch coil N opens contacts Z-Y and closes contact Z-X to condition the relay for the change back to the sequence mode.

Energizing K35B closes contacts which energizes K5B and closes contacts which turn on SEQ BYP lamp on the control panel. Energizing K5B closes contacts in the 120 VAC circuit to the insert-withdraw relays. Also, contacts close to turn on REGULATING CONTROL ON lamp on the control panel, contacts close to supply +24 volts through diode gates to turn on the CONTROL ON lamps for Group 5 on the P.I. panel.

Setting the MANUAL CONTROL switch to WITHDRAW supplies +24 volts through contacts of K8A, contacts of K8B, contacts of K11B, contacts, of K14A, contacts of K14B, and contacts, of K32 to energize out command relays K15A and K15B. Energizing K15A and K15B closes contacts which supply 120 VAC through contacts of K5B, contacts of K28, contacts of both K15A and K15B, and contacts of K12 to energize regulate out relays K6 and K12. K6 and K12 start Group 5 to withdrawing. Releasing the MANUAL CONTROL switch stops group out movement by de-energizing K15A and K15B which opens contacts to de-energize relays K6 and K12. De-energizing K15A and K15B opens contacts of both relays to turn off CRD TRAVEL OUT lamp on the control panel.

Setting the MANUAL CONTROL switch to INSERT supplies +24 volts through contacts of K8B, contacts of K8A, and contacts of K11B to energize in command relays K14A and K14B. Energizing K14A and K14B closes contacts of both relays to energize relay K5. Also, contacts of both relays close to turn on CRD TRAVEL IN lamp on the control panel. Energizing K5 starts Group 5 to inserting. Setting MANUAL CONTROL switch to the center position de-energizes K14A and K14B. De-energizing K14A and K14B opens contacts of both relays causing relay K5 to de-energize, stopping Group 5 in movement. De-energizing K14A and K14B also opens contacts of both relays to turn off CRD TRAVEL IN lamp on the control panel.

3.26.10 Manual Operation Of Safety Groups On Auxiliary Supply

The command logic circuits have to be set and a transfer made before a group can be moved on the auxiliary supply. After a transfer is accomplished, the command logic circuits are reset to enable operation. Since the operation of all groups on the auxiliary supply are similar, a description for Group 1 <u>only</u> will be presented.

GROUP SELECT switch on the control panel is set to 1. SEQ-SEQ BYP switch S13 is pressed to the SEQ BYP position, energizing unlatch coil FF of relay K35A. Energizing unlatch coil FF closes contacts to energize K35B. Releasing switch S13 energizes unlatch coil N. Energizing coil N opens contact Z-Y and closes contact Z-X to set the relay for the change back to the sequence mode.

Energizing K35B closes contacts in the command transfer relay circuit and closes contacts to turn on SEQ BYP lamp on the control panel.

GROUP-AUXIL switch S14 is pressed to select the AUXIL mode, energizing unlatch coil FF of relay K10A. Energizing unlatch coil FF closes contacts to energize K10B. Releasing S14 energizes unlatch coil N. Energizing unlatch coil N opens contact Z-Y and closes contact Z-X to set the relay for the change back to the group mode.

Energizing K10B closes contacts and energizes Group 1 command transfer relay K1. Relay K1 locks in through its own contacts and contacts of relay K101. Relay K101 is controlled by the transfer logic circuits. Energizing relay K1 closes contacts to energize reset relay K99. Energizing K99 closes contacts to energize transfer command lockout relay K9, which inhibits energizing any other group command transfer relay. Energizing relay K1 also closes contacts in the auxiliary regulating supply insert-withdraw circuit and contacts closes to turn on SAFETY GROUPS CONTROL ON lamp on the control panel. Two sets of contacts from K10B enable the transfer logic and one set of K10B contacts disable the transfer reset.

SPEED SELECT switch S4 on the control panel is set to JOG and energizes jog-run relay K12. Energizing K12 closes contacts in the jog relay circuit.

After the transfer is completed, transfer confirm contacts close, energizing transfer confirm relay K55, turning on the CONTROL ON lamps for Group 1 on the P.I. panel. Energizing K55 closes contacts to turn on TR CF lamp PL47 and opens contacts to inhibit the reset circuit. A set of contacts of K55 is used in the transfer logic circuits to inhibit the transfer reset circuit.

After the TR CF lamp comes on, GROUP-AUXIL switch S14 on the control panel is pressed to select the GROUP mode, energizing latch coil FF of K10A. Energizing latch coil FF opens contacts to de-energize group-auxiliary relay K10B. Releasing S14 energizes latch coil N. Energizing latch coil N closes contact Z-Y and opens contact Z-X to set the relay for the change to the auxiliary mode.

De-energizing K10B closes contacts to turn on GROUP lamp PL50 on the control panel to INSERT applies +24 volts through contacts of K8B, contacts K8A, and contacts of K11B to energize in command relays K14A and K14B. Energizing K14A and K14B closes contacts of both relays to supply 120 VAC from the programmer control through contacts of K120, contacts of K14A or K14B, contacts of K1, contact of K16 and contacts of K12 to energize jog in relay K8. Also, energizing K14A and K14B closes contacts of both relays to turn on CRD TRAVEL IN lamp PL34 on the control panel. Energizing K8 starts Group 1, which is now on the auxiliary regulating supply, to inserting. Setting MANUAL CONTROL switch S3 to the center position de-energizes K14A and K14B, which de-energizes jog in relay K8 to stop the insert motion of Group 1. Also, de-energizing K14A and K14B turns off CRD TRAVEL IN lamp PL34 on the control panel.

Setting MANUAL CONTROL switch S3 to WITHDRAW (spring return to center) supplies +24 volts through contacts of K8A, contacts of K8B, contacts of K11B, contacts of K14A and K14B, and contacts of K32 to energize out command relays K15A and K15B. Energizing K15A and K15B closes contacts of both relays to supply 120 VAC from the programmer control through contacts of K120, contacts 12 of K15A and K15B, contacts of K1, contacts of K24, and contacts of K12 to energize jog out relays K9 and K10. Also, energizing K15A and K15B closes contacts of both relays to turn on CRD TRAVEL OUT lamp PL35 on the control panel. Energizing K9 and K10 starts Group 1 to withdrawing. Releasing MANUAL CONTROL switch S3 de-energizes K15A and K15B, which de-energizes jog out relays K9 and K10 to stop the out motion of Group 1. Also, de-energizing K15A and K15B turns off CRD TRAVEL OUT lamp on the control panel.

3.26.11 Transfer Reset Relay K99

The transfer reset function is controlled by the transfer logic circuits. The group command transfer relay K1 is de-energized when the unlatch contacts of K101 open. Under this condition, contacts of K1 opens to de-energize K99, contacts of K99 open, and transfer command lockout relay K9 is de-energized.

3.26.12 Manual Reset Relay K98

The system can be returned to the manual mode by two methods: pressing the AUTO-MANUAL switch S15 on the control panel to MANUAL or automatically if one of four faults occurs in the system.

With the system in the automatic mode, the AUTO-MANUAL switch S15 [illegible] the control panel is pressed supplying +24 volts through contacts of K11A to energize latch coil FF. Opening contacts of K11A de-energizes auto-manual relay K11B, which changes the system to the manual mode. Releasing S15 energizes latch coil N. Energizing latch coil N closes contact Z-Y and opens contact Z-X to set the relay for the change back to the automatic mode.

Assuming the system is in the automatic mode, when one of four conditions occurs (sequence fault, auto-inhibit, motor direction fault, or the system trips supplying the trip confirm signal), auto-manual reset relay K98 energizes. Energizing K98 opens contacts to remove +24 volts from the AUTO-MANUAL switch. Simultaneously contacts of K98 close to hold unlatch coil N of K11A energized, which maintains contact Z-X closed to allow latch coil FF to energize. Energizing latch coil FF opens contacts to de-energize auto-manual relay K11B. This returns the system to the manual mode. After the fault is cleared, contacts of K98 close to energize latch coil N of K11A through the AUTO-MANUAL switch S15. Energizing latch coil N opens contact Z-X and closes contact Z-Y to set the relay for the return to the automatic mode.

3.26.13 Runback Enable Relay K53, Figure 9-1

If an asymmetric fault exists, the asymmetric fault relays (K69 & K70) controlled by inhibit-fault circuits energizes runback relay K53 through contacts of relay K11B. Then contacts of K53 bypass the in limit relay contacts for each regulating group for the group regulating and auxiliary supply. This allows the control system to respond to insert commands from the integrated control system if a power reduction is required.

3.26.14 Trip Reset Relay K57, Figure 9-1

The trip reset relay circuits set the system during initial startup and reset it after a trip occurs. The D.C. breakers may also be reset locally by individual breaker reset button or by gang bar.

3.26.14.1 Closing (resetting) AC Trip Breakers

The TRIP RESET switch S1 on the control panel is pressed to supply +24 volts through Group 1 thru 7 in limit relays K16 thru K22 to energize trip reset relay K57. Energizing K57 closes contacts to supply +24 volts to energize relays K7 and K8 in the source interruption device of the A.C. breakers. Contacts of K57 also close to turn on TRIP RESET lamp PL44 on the control panel. Energizing K8 closes contacts to supply 120 VAC to energize X coil of the AC Breakers. Energizing X coil energizes the closing contactor coil of the circuit breakers. Energizing the closing contactor coil initiates the mechanical closing action of the circuit breaker. The mechanical action closes the main contacts to distribute the main A.C. voltage. Also, the mechanical action opens contacts, de-energizing the X coil, and closes contacts to energize the Y coil. Energizing the Y coil opens contacts to inhibit the X coil from energizing even if relay K8 is held energized. This prevents the repeated operations that would occur if one of the automatic trip devices was activated at the time of closing. The mechanical action of the circuit breakers also closes auxiliary switch contacts to enable the shunt trip coil.

Energizing K7 opens contacts to inhibit the circuit to the shunt trip coil. This prevents the circuit from tripping until the undervoltage and over-voltage circuits are set.

3.26.14.2 Closing (resetting) D.C. Trip Breakers

Energizing trip reset relay K57 closes contacts to energize relays K1 and K2 on the trip reset panel. Energizing K2 closes contacts to energize programmer control reset relay K3. Energizing K1 closes contacts to energize the X coil of D.C. circuit breakers. Energizing the X coil closes contacts to energize the closing coils. Energizing the closing coils initiates the mechanical closing action of each breaker.

3.28.7 Trip Confirm System Logic

Trip confirm is a set of signals that reflect the condition of the system trip breakers and electronic trips.

The trip confirm signals are divided into four (4) separate signals: Trip 1, Trip 2, Trip 3 and Trip 4. Trip 1 and Trip 2 reflect the state of A.C. breakers A and B, respectively. Trip 3 and Trip 4 reflect the state of the D.C. breakers, CB1 and CB2 the electronic trip of channel A; and state of the D.C. breakers CB3 and CB4, channel B electronic trip, respectively. When all trip breakers are closed, contacts of A.C. breaker A energize trip confirm relay K131; contacts of A.C. breaker B energize trip confirm relay K132; parallel contacts of D.C. breaker CB1, CB2 and electronic trip confirm relay K2 contacts of each electronic trip assembly of each SCR regulating supply energize trip confirm relay K133; and parallel contacts of D.C. breaker CB3, CB4 and electronic trip confirm relay K5 contacts of each electronic trip assembly of each SCR regulating supply energizes trip confirm relay K134. Contacts of K131 and K133 or K132 and K134 energize trip confirm relay K135.

When the reactor trip switch on control room console, or the Nuclear Instrumentation interrupts the 120 VAC supply to the reactor trip switch, both A.C. breakers A and B open, de-energizing trip confirm relays K131 and K132, respectively, and simultaneously all four D.C. breakers open, and electronic trip confirm relays K2 and K5 de-energize, de-energizing trip confirm relays K133 and K134. This results in de-energizing trip confirm relay K135. Contacts of K135 indicate a reactor trip while contacts of K131, K132, K133 and K134 inform the Nuclear Instrumentation of system condition. The TRIP CONF lamp on the control panel comes

3.28.8 Asymmetry Alarm

If a control rod gets out of position with the rest of the rods in a group by more than 7 inches, alarm relay K228 in the position indicator module associated with the out-of-position rod will energize. Relay K228 is controlled by the position indicator circuits. When K228 energizes, the associated ALARM lamp on the P.I. panel is on and asymmetry alarm control relay K68 is energized. All 69 of the K228 relays are parallel connected so that either one of the relays will energize K68. Contacts of K68 sends an asymmetry alarm signal to the plant annunciator. A set of K68 contacts turns on the ALARM lamp on the ASYMMETRIC ROD CALIBRATE panel for local indication during asymmetry alarm calibration.

3.28.9 Asymmetry Fault

If a control rod gets out of position with the rest of the rods in a group by more than 9 inches, fault relay K229 in the position indicator module associated with the out-of-position rod will energize. There is one position indicator module for each CRDM. Relay K229 is controlled by the position indicator circuits. When either one of the K229 relays energize, +24 volts is applied to the coils of asymmetry fault control relays K69 and K70 energizing the relays. A set of K69 and K70 contacts is used to turn on the ASYMM RODS lamp on the control panel and another set furnish and asymmetry fault signal to the plant computer.

3.28.10 Out Inhibit

Out inhibit relay K32 is normally de-energized. The coil of K32 is series connected with a set of contacts in the Nuclear Instrumentation System which are open during normal operation. If an out inhibit condition occurs, the contacts in the NIS close and K32 energizes. This turns on INHIBIT OUT lamp on the control panel. If the system is in manual mode, contacts of K32 send an out inhibit signal to the plant computer, the ICS, the plant annunciator, and the Nuclear Instrumentation System. Contacts of K32 are used in the command logic to inhibit the out command circuits. Out inhibit relay K33 is normally energized and is controlled by the 60 percent power level signal from the ICS or contacts of safety rods out limit relay bypass K39 and relays K69 and K70. Relay K33 is de-energized if the power level is above 60 percent and the safety rods are not at the out limit or an asymmetry fault occurs. Contacts of K33 are used in the command logic circuits to inhibit the automatic out command circuits.

3.28.11 Auto Inhibit

Relay K34 is energized by the ICS when the reactor power level is above 15% a pre-determined level, a neutron error does not exist, an auto inhibit signal from the ICS does not exist, and the safety rods are at the out limit. Relay K34 locks-in through auto inhibit contacts in the ICS, its own contacts and contacts K11B (command logic) if system is in automatic mode. Once K34 energizes, the 15 percent power level or neutron error signal from the ICS cannot de-energize K34. Relay K34 will de-energize if the system is returned to manual mode. When de-energized, contacts of K34 turn on INHIBIT AUTO lamp on the control panel and inhibits the automatic command circuits in the command logic.

3.29 P.I. RESET LOGIC, Figures 3-15, 9-6

The P.I. reset logic circuits are used to readjust the relative position of the position indication meters if a discrepancy exists between the relative position indication and the actual position of the mechanism. The reset circuits adjust the meters at a slow speed in the withdraw direction and at a fast speed in the insert direction. The reset circuit also contains the power supply that supplies the +24 volt control voltage for the reset circuit.

amplifier OA-1 and the output is the relative group average P.I. signal for the associated group. The relative group average P.I. signal is applied to pin C of the regulating group patch receptacles only. Pin C is connected to pin B on the mating group patch plug and the RPI group average signal is returned to the relative group average amplifier.

3.33.2 Group 6 & 7 Averager Module

There are two Group 6 & 7 averager modules; one is an averager of the Group 6 & 7 API group position signals and the other is an averager of the Group 6 & 7 RPI group position signals. Each module produces two Group 6 & 7 average position signals. One output is a 0 to -5 volt average position signal and the other is a 0 to +5 volt average position signal.

The Group 6 API group average position signal and Group 7 API group average position signal are applied to IC-1 where the output is the average of the two input signals. The output of IC-1 goes to pin 10 as the 0 to -5 volt Group 6 & 7 average position signal and is applied to the inverting input of IC-2. The output of IC-2 is applied to pin 4 as the 0 to +5 volt Group 6 & 7 average position signal.

3.33.3 Automatic Sequencer Module

The automatic sequencer circuits control the sequence of withdrawal and insertion of Group 5 and Group 6 & 7. The withdrawal of Group 5 is enabled by the safety rods fully withdrawn, and Group 6 & 7 is at their in limits.

With the safety rods fully withdrawn, contacts of safety rods [illegible] relay K39A applies ground to the voltage dividers at pin 10. This causes the output of IC-1A to go from a "0" (low level) to a "1" (high level) and is applied to IC-2A, IC-2B, and IC-2C. With Group 5 not at its out limit, pin 6 is open. This causes a "1" to be applied to the input of nand gate IC-2A. With Group 6 & 7 less than 26% withdrawn, the output of IC-4 is a "0" and is applied to inverter IC-1B. The output of inverter IC-1B is a "1" and is applied to nand gate IC-2A. With all the inputs to nand gate IC-2A at a "1" the output is a "0" and is applied to nand gate IC-3A. With Group 6 & 7 less than 25%, the output of IC-5 is a "0" and is applied to inverter IC-1C which inverts the "0" to a "1". This is applied to nand gate IC-2B. With Group 5 less than 75% withdrawn, the output of IC-7 is a "0" and is applied to nand gate IC-2B. This causes the output of IC-2B to be a "1" which is applied to IC-3A and IC-3B. With Group 6 & 7 at in limit, ground is applied to pin 8. This causes a "0" to be applied to IC-2C. With Group 5 less than 74%, the output of IC-6 is a "0" and is applied to nand gate IC-2B.

This causes the output of nand gate IC-2C to be a "1" which is applied to nand gate IC-3B. The two inputs of nand gate IC-3A are at a "1" and a "0", this causes the output of nand gate IC-3A to be a "1" which turns on driver Q1. This will energize Group 5 sequence enable relay K85 in the command logic. The two inputs of nand gate IC-3B are both at a "1", this causes the output of nand gate, IC-3B to be a "0". This will not turn on driver Q2, and causes Group 6 & 7 sequence enable relay K86 to be de-energized in the command logic.

When Group 5 reaches 75% withdrawal set point of IC-7, the output of IC-7 will change from a "0" to a "1" and will change the output of nand gate IC-2B to "0". This changes one input of IC-3A and IC-3B to a "0". The output of IC-3A will not change so the driver Q1 will remain turned on and Group 5 sequence enable relay will remain energized. The output of IC-3B will change to a "1" and will turn on driver Q2. This causes the Group 6 & 7 sequence enable relay K87 to energize in the command logic.

Group 5, and Group 6 & 7 will now withdraw. When Group 5 reaches its out-limit, pin 6 will apply a "0" to nand gate IC-2A. This causes the output of nand gate IC-2A to be a "1" which is applied to nand gate IC-3A. At the same time, Group 6 & 7 has reached the 25% level, changing the output of IC-2B to "1". The output of nand gate IC-3A will change to a "0", turning off driver Q1. This will de-energize Group 5 sequence enable relay K85, removing Group 5 from control.

The Group 6 & 7 nominal set point enables Group 5 for a sufficient period of time to reach the out limit. This set point is adjusted so that Group 5 control relay K87 remains energized until Group 5 out limit occurs and Group 6 & 7 continues to withdraw. This adjustment shall never be set for less than a 25% position level of Group 6 & 7.

In insert sequence mode (Groups 5 and 6 & 7 at respective out limits), only Group 6 & 7 is initially enabled. As Group 6 & 7 approaches the 25% set point, the output of IC2-B goes from "1" to "0". This in turn causes the output of IC3-A to go from "0" to "1", energizing relay K85, and enabling Group 5 insertion.

As Group 6 & 7 approaches in limit, Group 5 approaches 75% set point. As Group 5 reaches the 75% set point, IC2-B output changes from "0" to "1". Then, when Group 6 & 7 reaches in limit, ground is applied to pin 8, causing IC2-C output to go from "0" to "1". This in turn causes IC3-B output to go to "0", de-energizing relay K87 and removes Group 6 & 7 from control.

The Group 5 74% nominal set point enables Group 6 & 7 for a sufficient period of time to reach in limit. Because Group 6 and Group 7 operate in parallel while in the sequence mode, both groups must reach the in limit before Groups 6 & 7 is disabled. The set point is adjusted so that both groups reach their in limits before the Group 6 & 7 relays K87 de-energizes as Group 5 continues to insert. This adjustment shall never be set far greater than a 75% position level of Group 5.

3.33.4 Group 6 & 7 Difference Amplifier Module

The Group 6 API and Group 7 API group average position signals are compared in the difference amplifier. When Group 6 & Group 7 are 8 inches or more apart, a fault condition exists. Summing amplifier IC-1, set point amplifier IC-4, and inverter IC-7A are used to determine a fault condition when Group 7 API group average position signal is more than 8 inches than Group 6 API group average position signal. The output of the summing amplifier IC-1 is determined by the amplitude of the two inputs. When Group 7 is 8 inches greater than Group 6, the output of IC-1 is more negative than the positive set point established by P4. This causes the output of IC-4 to change from a "0" (low level) to a "1" (high level) which is inverted to a "0" by inverter IC-7A. This turns off driver Q1 which de-energizes Group 6 & 7 misalignment relay K51. Contacts of K51 are used to indicate a fault indication to the control panel, plant computer and plant annunciator panel.

Summing amplifier IC-2, set point amplifier IC-5, and inverter IC-7B are used to determine fault condition when Group 6 API group average position signal is more than 8 inches in respect to Group 7 API group average signal. The output of summing amplifier, IC-2, is determined by the amplitude of the two inputs. When Group 6 is 8 inches greater than Group 7, the output of IC-2 is more negative than the positive set point established by P5. This causes the output of IC-4 to change from a "0" to a "1" which is inverted to a "0" by inverter IC-7B. This turns off driver Q1 which de-energizes Group 6 and 7 misalignment relay K51A. Contacts of K51A are used to indicate the Group 6 and 7 misalignment to the control panel, plant computer, and the plant annunciator.

3.33.5 Sequence Monitor No. 1 And No. 2 Module

Seq. fault alarm

Sequence Monitor No. 1 and No. 2 monitor Group 5 and Group 6 & 7 RPI average signals and provide a fault signal when the groups are out of sequence. Fault conditions exist when Group 5 is less than 80% withdrawn and Group 6 & 7 is greater than 5% withdrawn; or when Group 5 is less than 95% withdrawn and Group 6 & 7 is greater than 20% withdrawn. When Group 5 and Group 6 & 7 are fully inserted, the output of set point amplifiers IC-1, IC-2, IC-3 and IC-4 are "0". The output of set point amplifiers IC-3 and IC-4 are applied to nand gates IC-6A and IC-6B, respectively. The output of set point amplifiers IC-1 and IC-2 are inverted to a "1" by inverter IC-5A and IC-5B and applied to nand gates IC-6A and IC-6B, respectively. Since the inputs to nand gates IC-6A and IC-6B are of opposite states, the outputs will be a "1" and are applied to nand gate IC-6C. The output of nand gate IC-6C will be a "0" and driver Q1 will not turn on, the sequence fault relay K89 will be de-energized and the sequence fault is not indicated to the plant computer and plant annunciator.

When Group 6 & 7 is greater than 5% withdrawn, the output of set point amplifier IC-3 will change to a "1" and is applied to one input of nand gate IC-6A. If Group 5 is less than the 80% withdrawal level, the other input of nand gate IC-6A is a "1". Since both inputs of IC-6A are at "1", the output of nand gate IC-6A is a "0" which is applied to nand gate IC-6C. This causes the output of nand gate IC-6C to be a "1" which turns on driver Q1, energizing sequence fault relay K89. When Group 6 & 7 is greater than 20%, the output of set point amplifier IC-4 will change to a "1" and is applied to one input of nand gate IC-6B. If Group 5 is less than the 95% withdrawal level, the other input of nand gate, IC-6B is a "1". Since both inputs of IC-6B are at "1", the output of nand gate IC-6B is "0" which is applied to nand gate IC-6C. This causes the output of nand gate IC-6C to be "1" which turns on driver Q1, energizing sequence fault relay K39.

3.33.6 Set Point Amplifier Module

Tells ICS Grp 5 > 25% for Calc Control

The set point amplifier, located in Group Position Control Chassis No. 2, provides an output signal to the ICS. When Group 5 API group average position signal reaches 25% withdrawn, the output of IC-1 is "1" which turns on driver Q1, and energizes relay K65. Contacts of K65 are used to provide the signal to the ICS.

3.33.7 Group 6 & 7 Absolute/Relative Select Keylock Switch

The Group 6 & 7 absolute/relative select keylock switch, located on the Group Position Control No. 2 Chassis is used to select the Group 6 & 7 absolute group average position signal or the Group 6 & 7 relative group average position signal outputs to the ICS. When Group 6 & 7 absolute group average position signal is to be sent to the ICS, the keylock switch is placed in the ABS position. Relay K66 is de-energized and the Group 6 & 7 absolute group average position signal is sent to the ICS through normally closed contacts of K66. When Group 6 & 7 relative group average position signal is to be sent to the ICS, the keylock switch is placed in the REL position, relay K66 is energized and the Group 6 & 7 relative group average position signal is sent to the ICS.

3.34 ± 15 VDC POWER SUPPLIES, Figures 3-18, 3-19, 9-8

The four 15 VDC power supplies marked +15A, +15B, -15A, and -15B are located in system logic cabinet No. 5. The +15A and +15B outputs are connected together at the auctioneering assembly to provide an auctioneered +15 VDC output. The -15A and -15B supplies are also auctioneered. The D.C. power supplies provide power to the modules in the group position control; position indication amplifiers chassis A, B, C, and D; and the system monitor.

For a complete description of the supplies, refer to HEWLETT PACKARD D.C. POWER SUPPLY, MODEL 6223B vendor manual.

3.78.2 Run Out

When a "run out" command is received from the command logic circuits, 120 VAC ABT is applied through contacts of de-energized run in relay K3, contacts of energized run out relays K10 and K14, and contacts of energized relay K2 to the red lead of 60 RPM RUN motor M1. This causes the motor to turn in the opposite direction from the run in voltage.

3.78.3 Jog In

When a "jog in" command is received from the command logic circuits, 120 VAC ABT is applied through contacts of de-energized run out relays K4 and K10, contacts of energized jog in relay K6, and contacts of energized relay K15 to the red lead of 6 RPM jog motor M2.

3.78.4 Jog Out

When a "jog out" command is received from the command logic circuits, 120 VAC ABT is applied through contacts of de-energized run out relay K4 and K10, contacts of de-energized jog in relay K6, contacts of energized jog out relay K7 and K8, and contacts of energized relay K2 to the 6 RPM jog motor M2.

3.78.5 D.C. Brake Module, Figures 11-47, 11-48

The D.C. brake voltages for the 60 RPM regulate motor M1 and the 6 RPM jog motor M2 are supplied by bridge rectifiers CR5 and CR6 and transformer T1. Transformer T1 received the 120 VAC ABT voltage from TB1. T o bridge rectifiers are connected to the T1 secondaries. The D.C. output of bridge rectifier CR5 is applied through contacts 9 and 1 of run in relay K3 and run out relays K4 and K10 to the 60 RPM run motor M1. The D.C. voltage holds motor M1 in a fixed position as long as a "run in" or "out" command is not received from the command logic circuits. The D.C. output of bridge rectifier CR6 is applied through contacts of jog in relay K6, jog out relays K7 and K8, and 3-2 hold relays K11 and K5 to the 6 RPM jog motor M2. This voltage holds motor M2 in a fixed position as long as a "jog in" or "jog out" command is not received from the command logic circuits and the 3-2 hold relays remain de-energized. If a loss of the 120 VAC ABT occurs, relays K2 and K15 de-energize. Under this condition, a D.C. brake voltage of +24 volts is applied through diode CR7 and contacts 9 and 1 of K2 to motor M1 and open contacts of K15 interrupts the jog out command path to motor M2. A set of K2 contacts is used in the inhibit-fault circuits to provide a motor fault (direction error) indication.

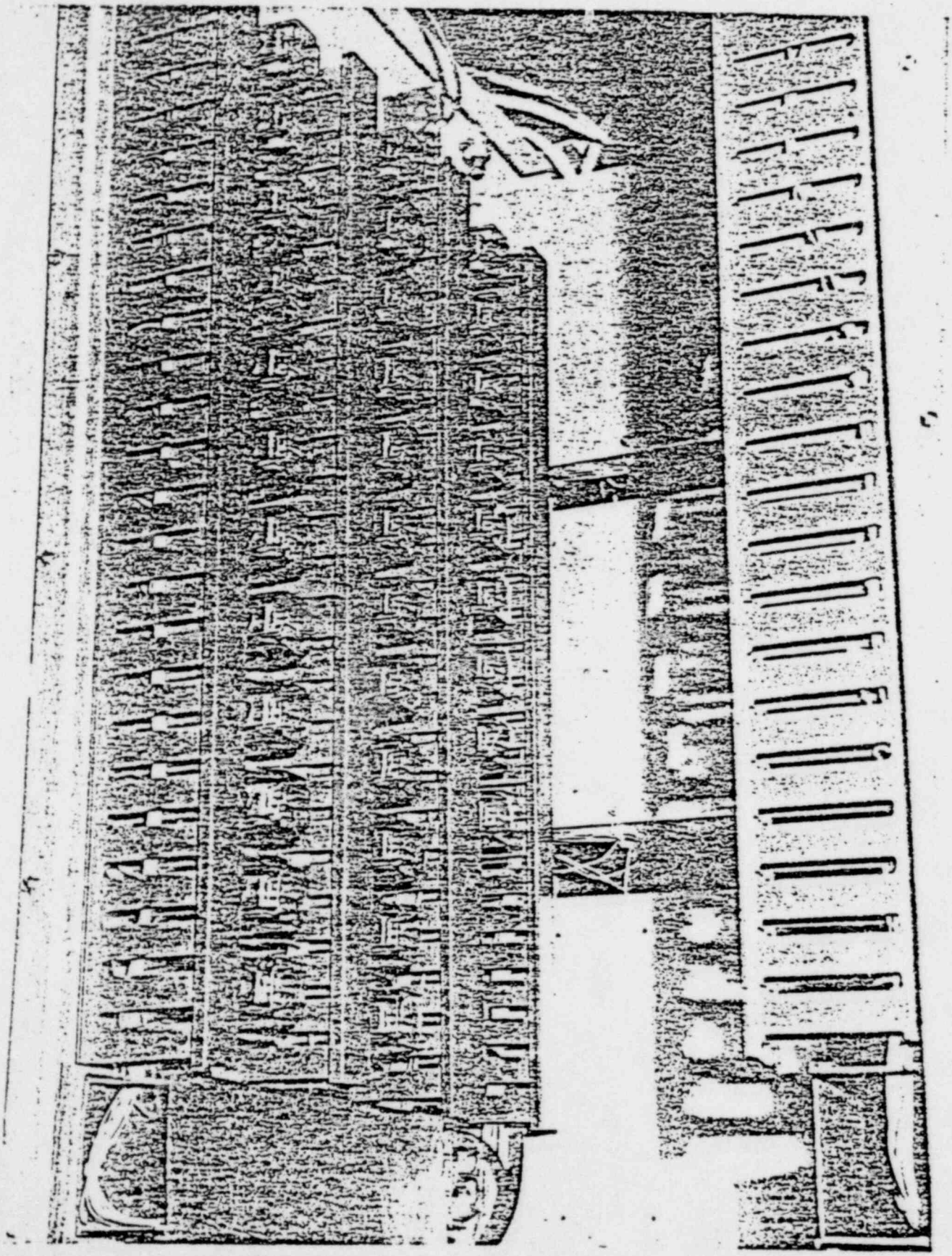

LOCATED IN SL1

FIGURE 3-1 TRANSFER SELECTOR ASSEMBLY

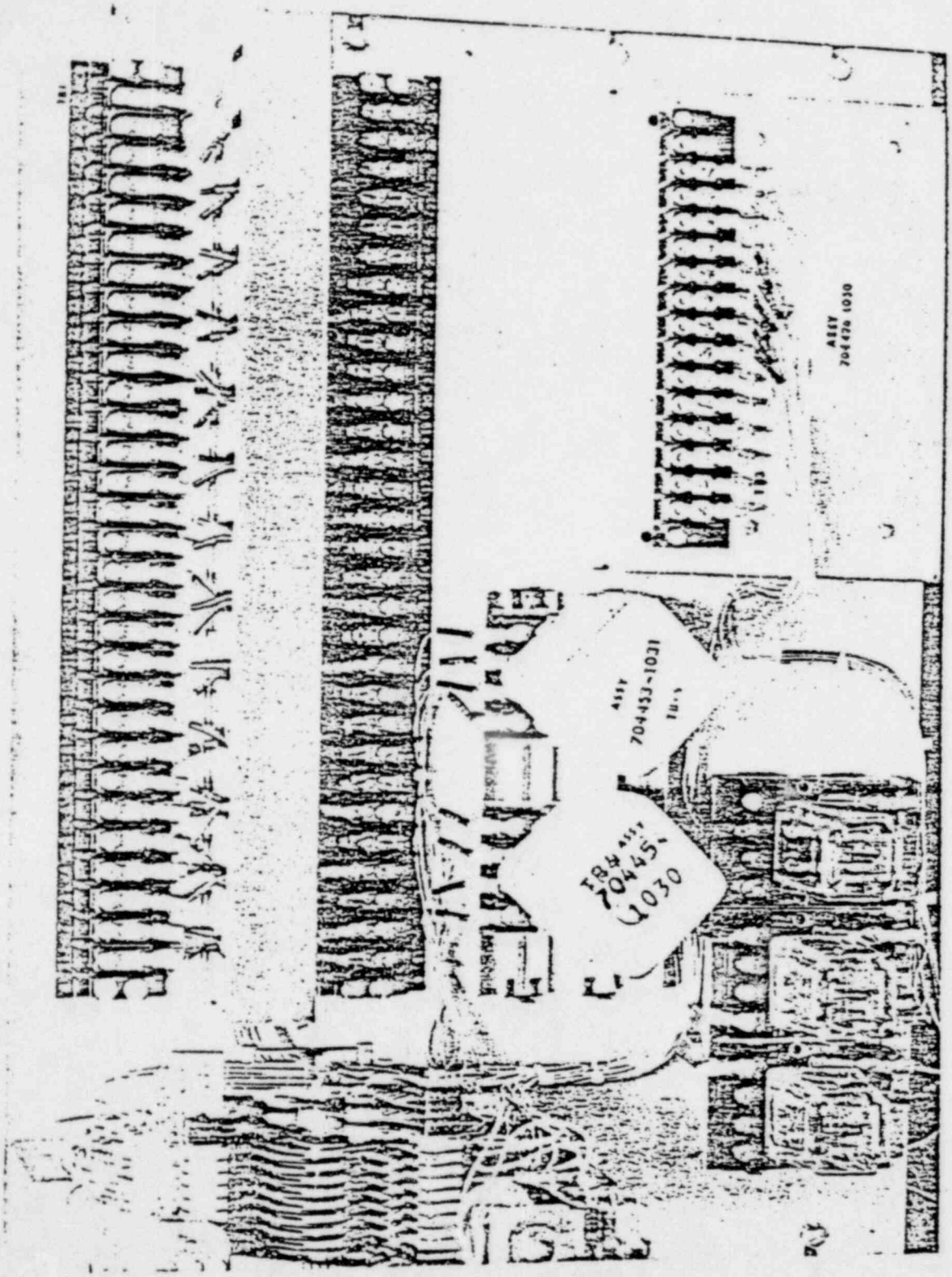

LOCATED IN SL1

FIGURE 3-4 TRANSFER SYNCHRONIZER ASSEMBLY

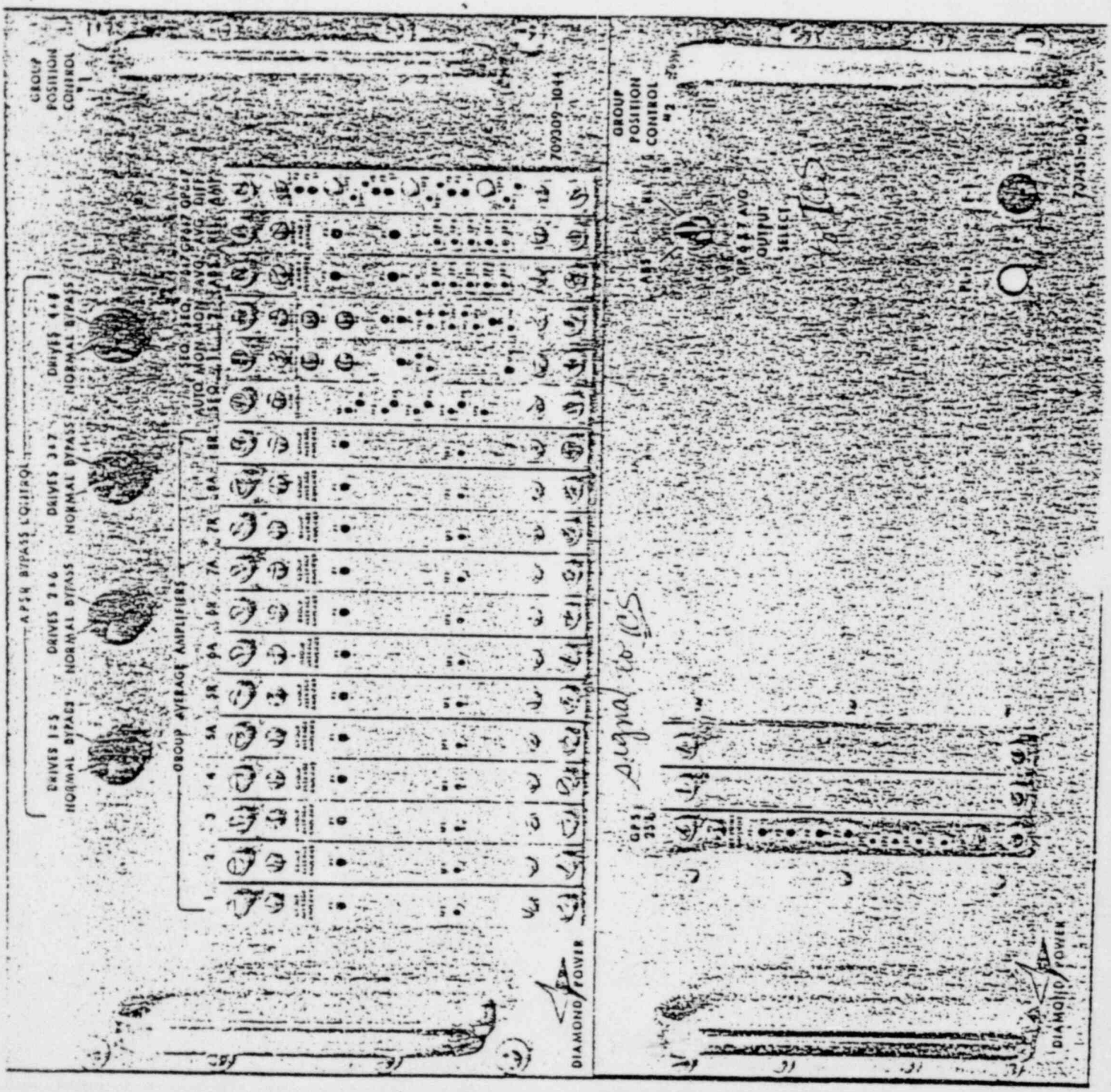

FIGURE 3-17 GROUP POSITION CONTROL NO. 1 AND NO. 2 M2907D

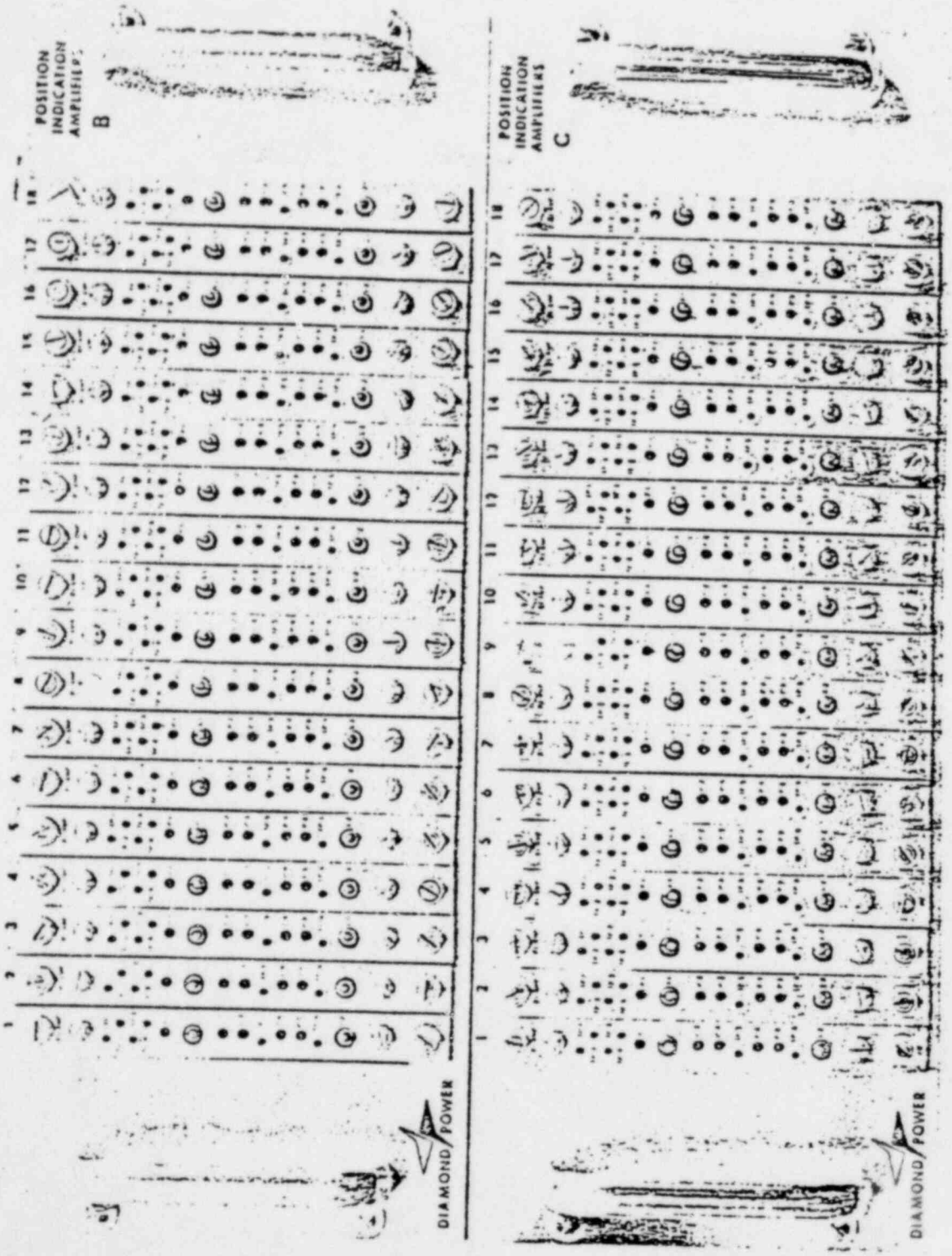

LOCATED IN SL6

FIGURE 3-22 POSITION INDICATION AMPLIFIERS B AND C

LOCATED IN SL7

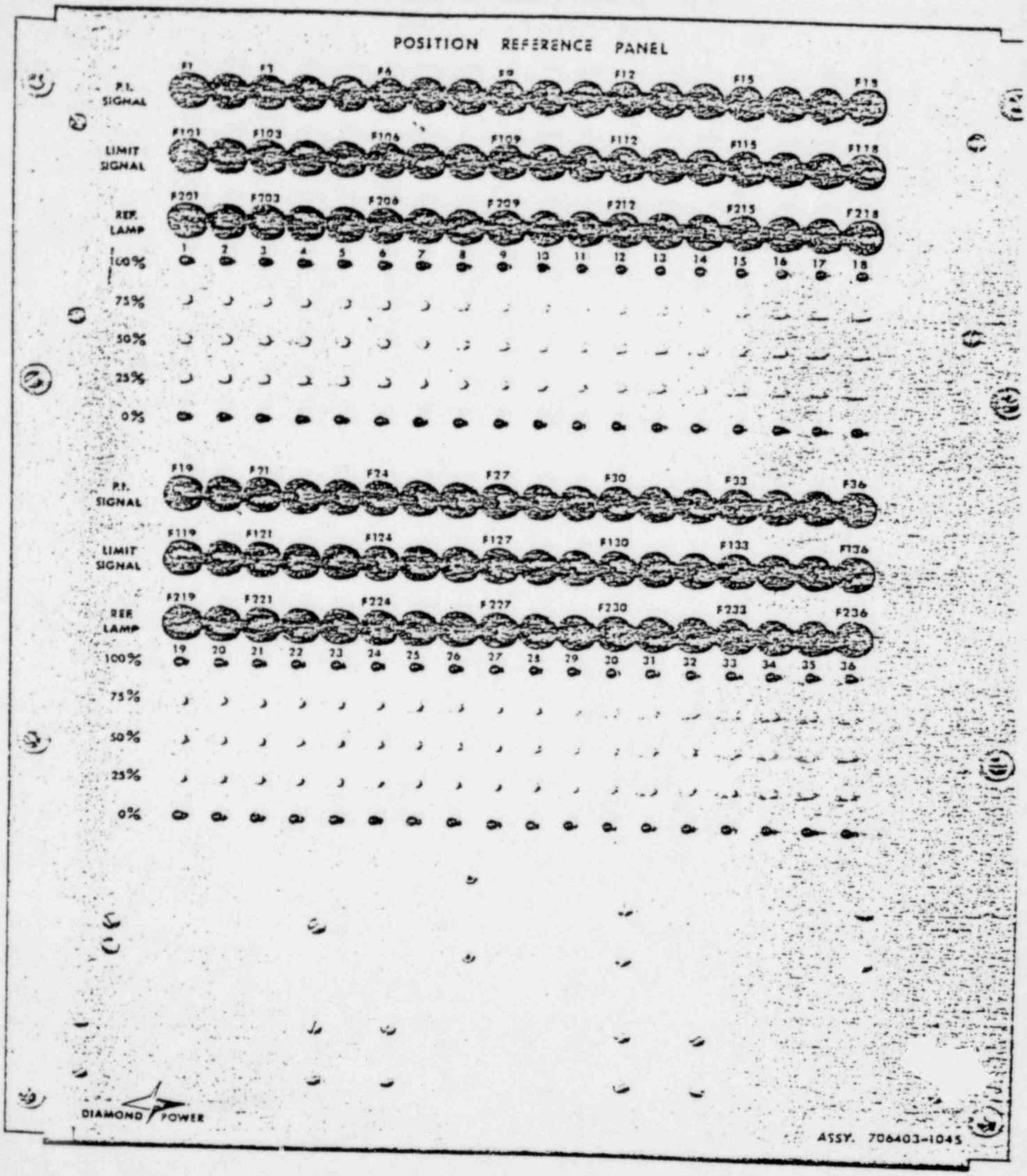

FIGURE 3-27 CRDM 1 THRU 36 POSITION REFERENCE PANEL MZ9080

LOCATED IN SL7

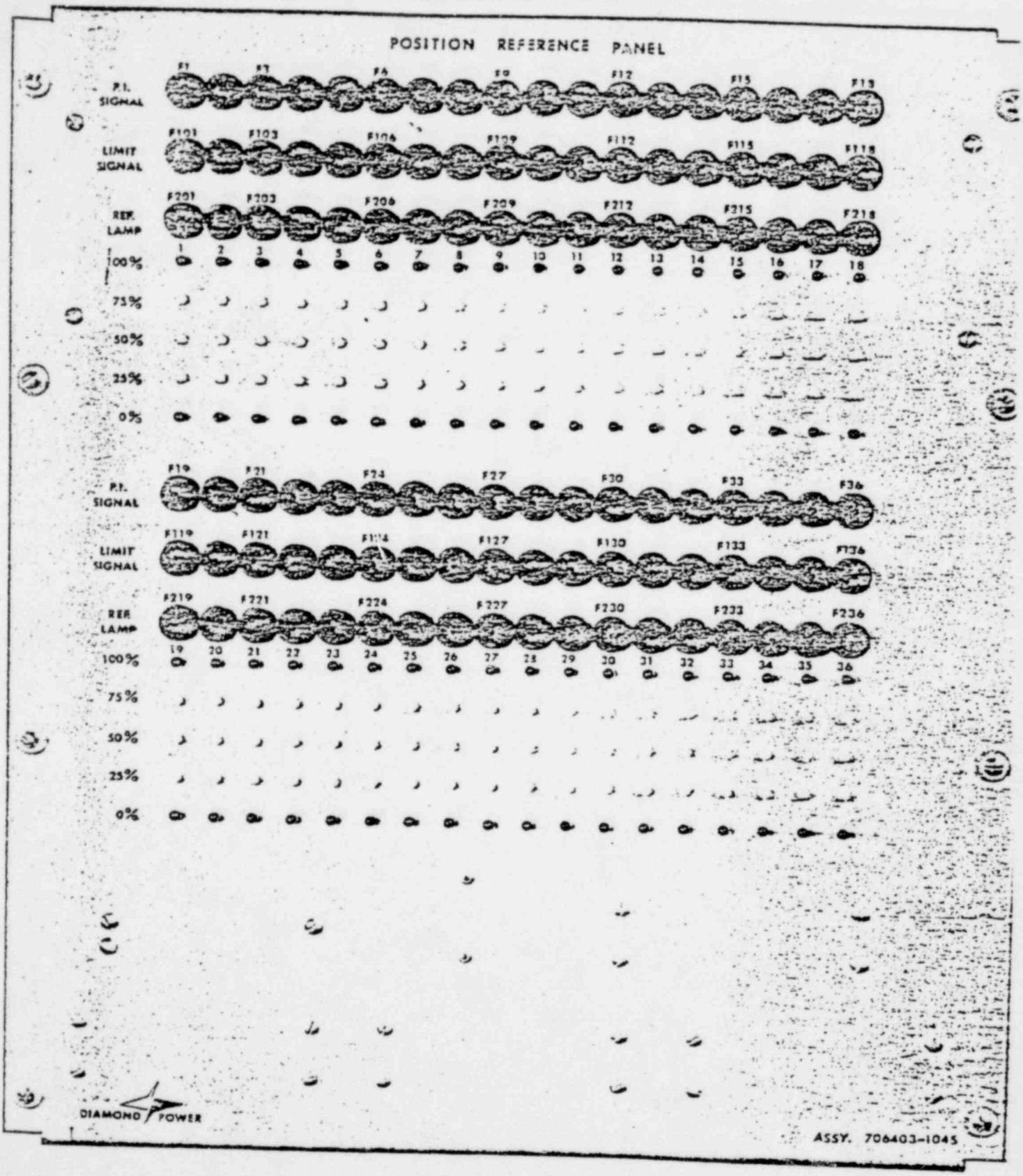

FIGURE 3-27 CRDM 1 THRU 36 POSITION REFERENCE PANEL M29080

LOCATED IN SL7

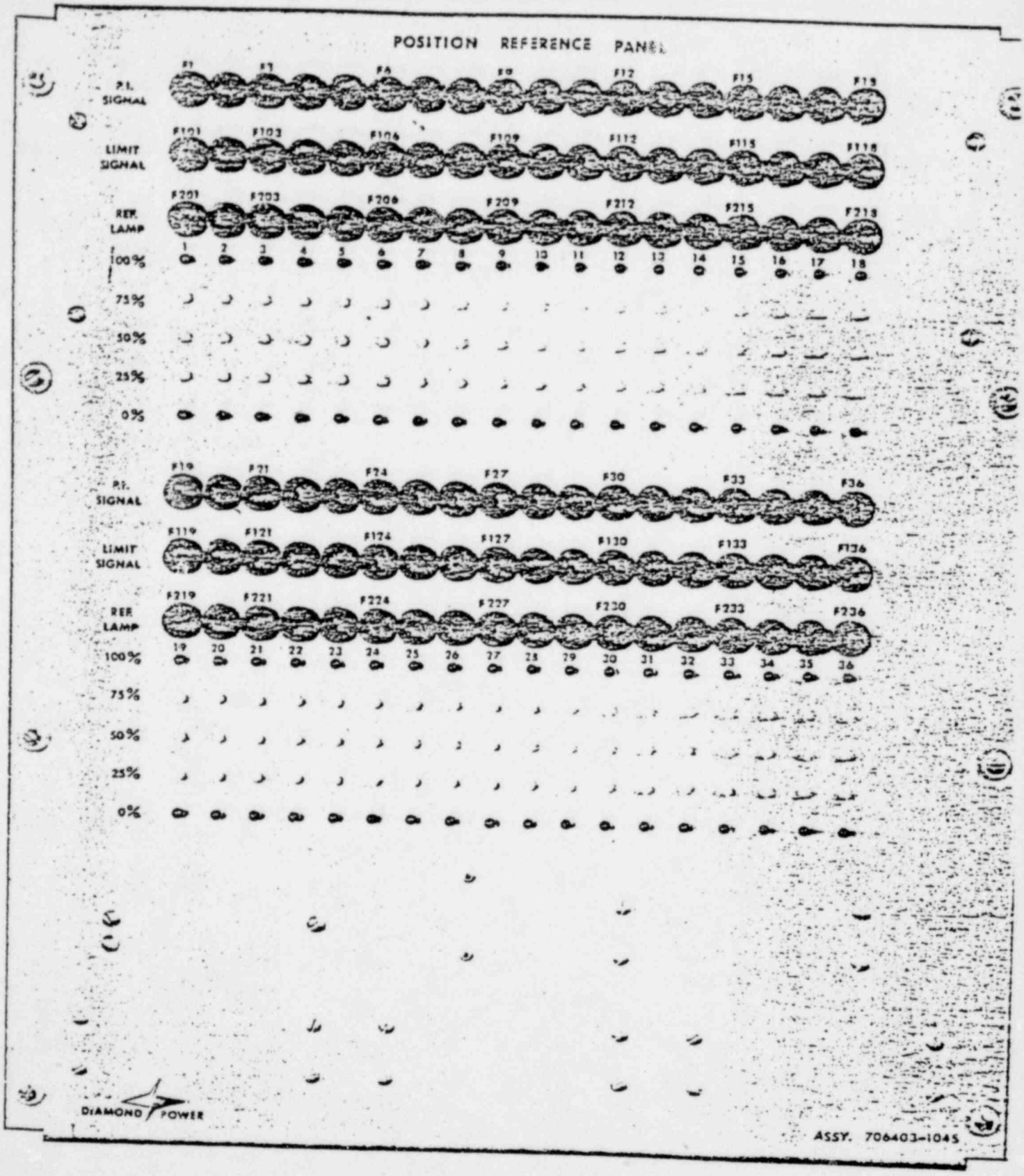

FIGURE 3-27 CRDM 1 THRU 36 POSITION REFERENCE PANEL MZ9080

LOCATED IN SL7

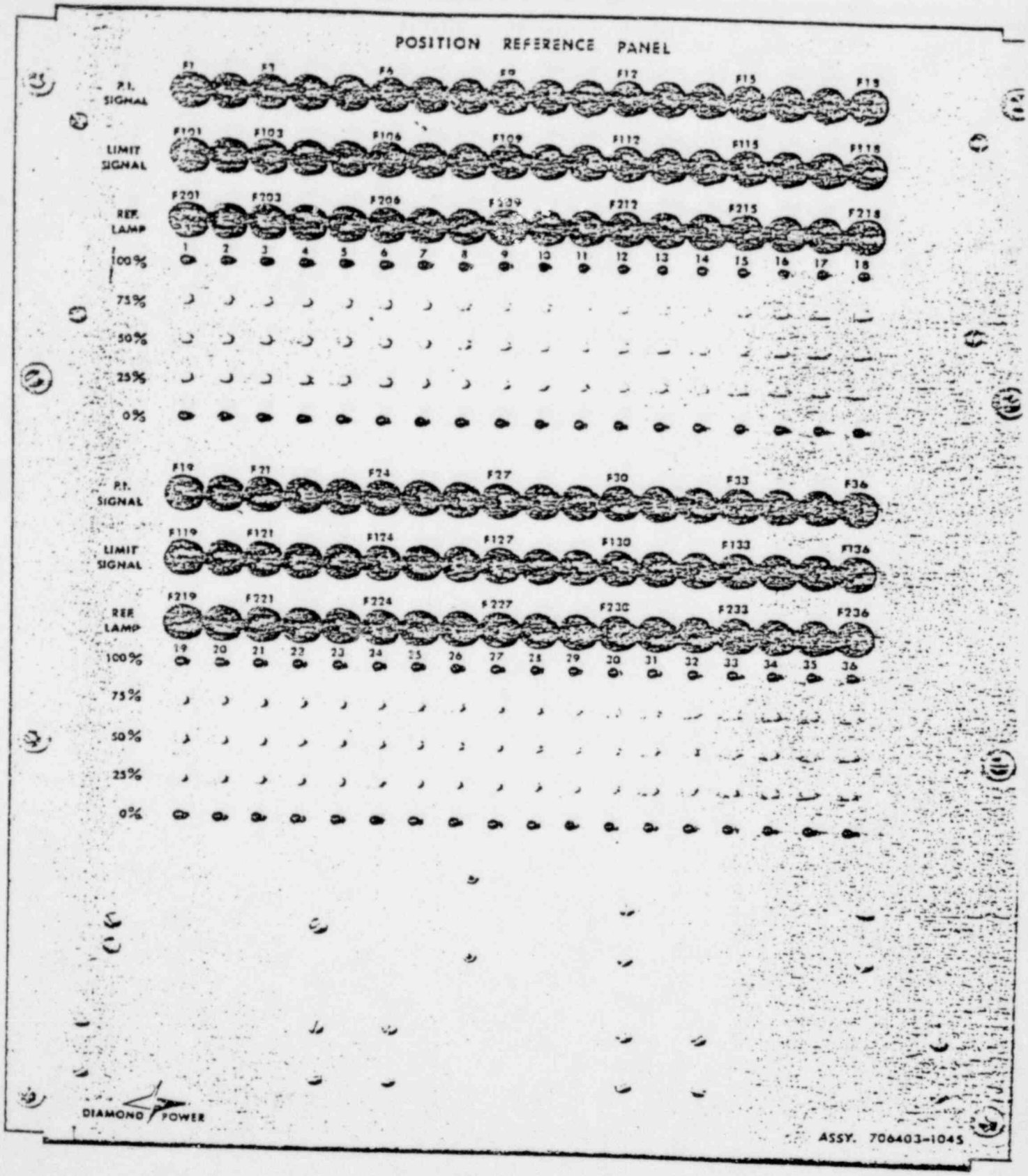

FIGURE 3-27 CRDM 1 THRU 36 POSITION REFERENCE PANEL M2908Q

LOCATED IN SL7

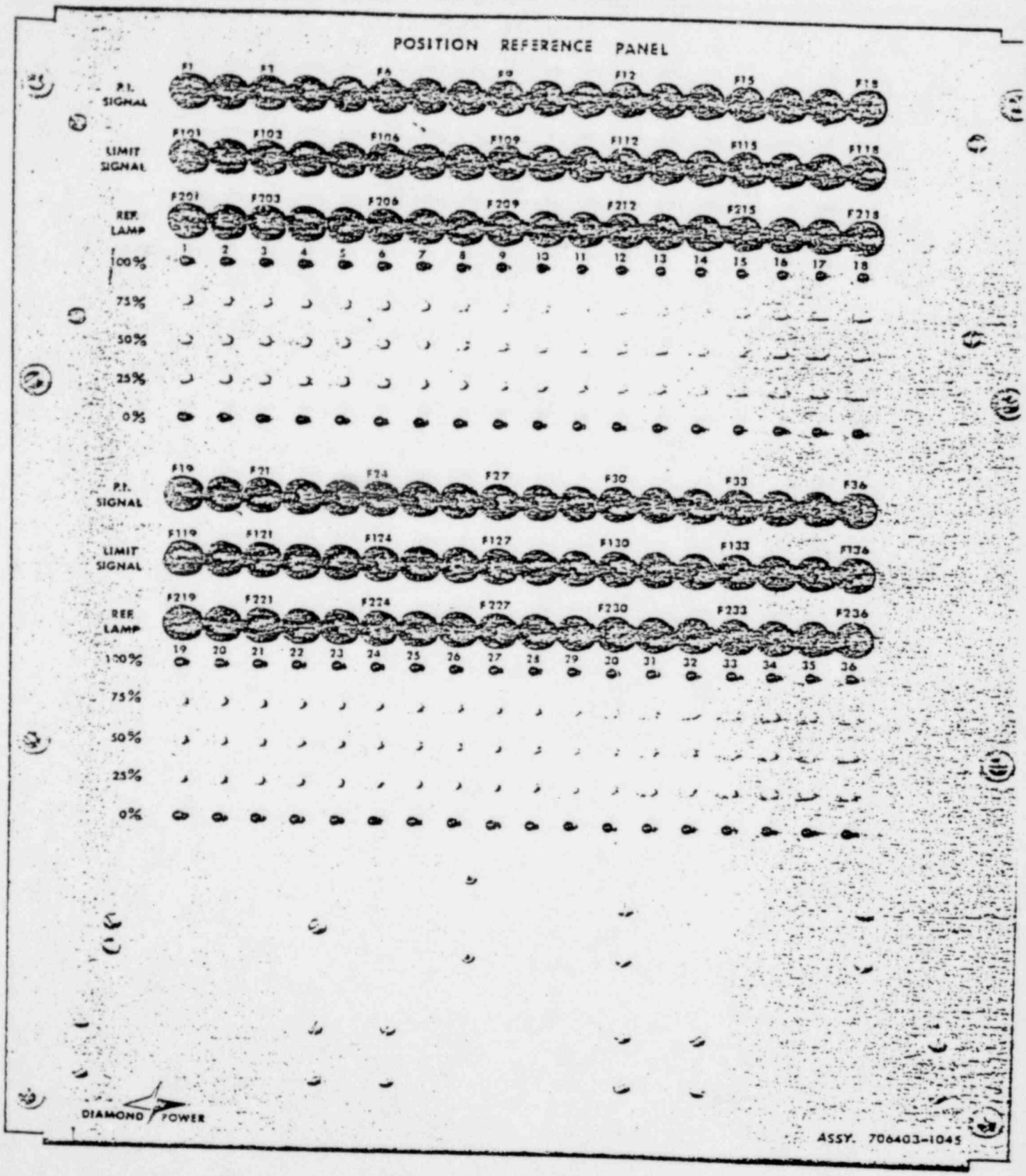

FIGURE 3-27 CRDM 1 THRU 36 POSITION REFERENCE PANEL M2908D

LOCATED IN SL8

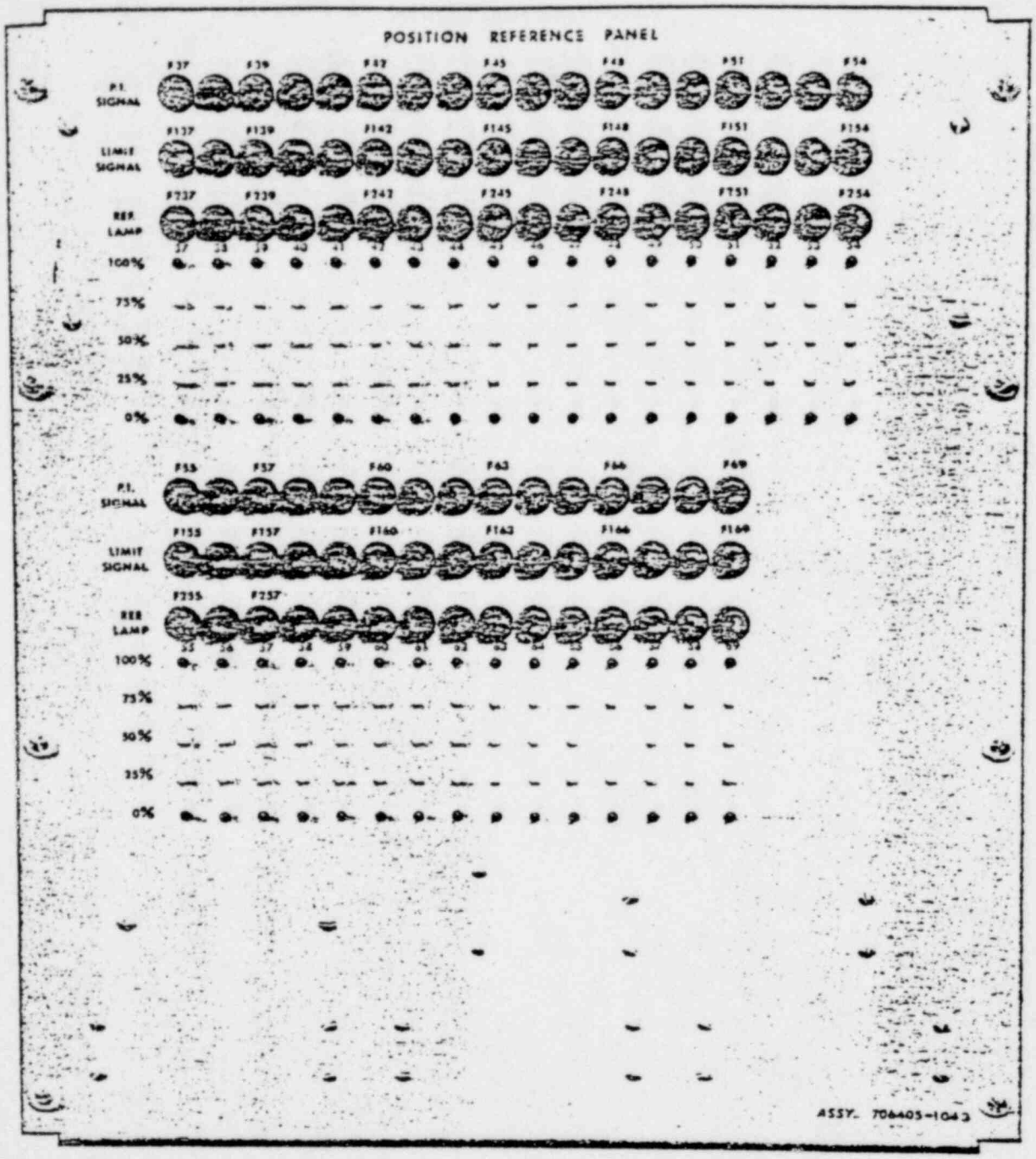

FIGURE 3-28 CRDM 37 THRU 69 POSITION REFERENCE PANEL M2918D

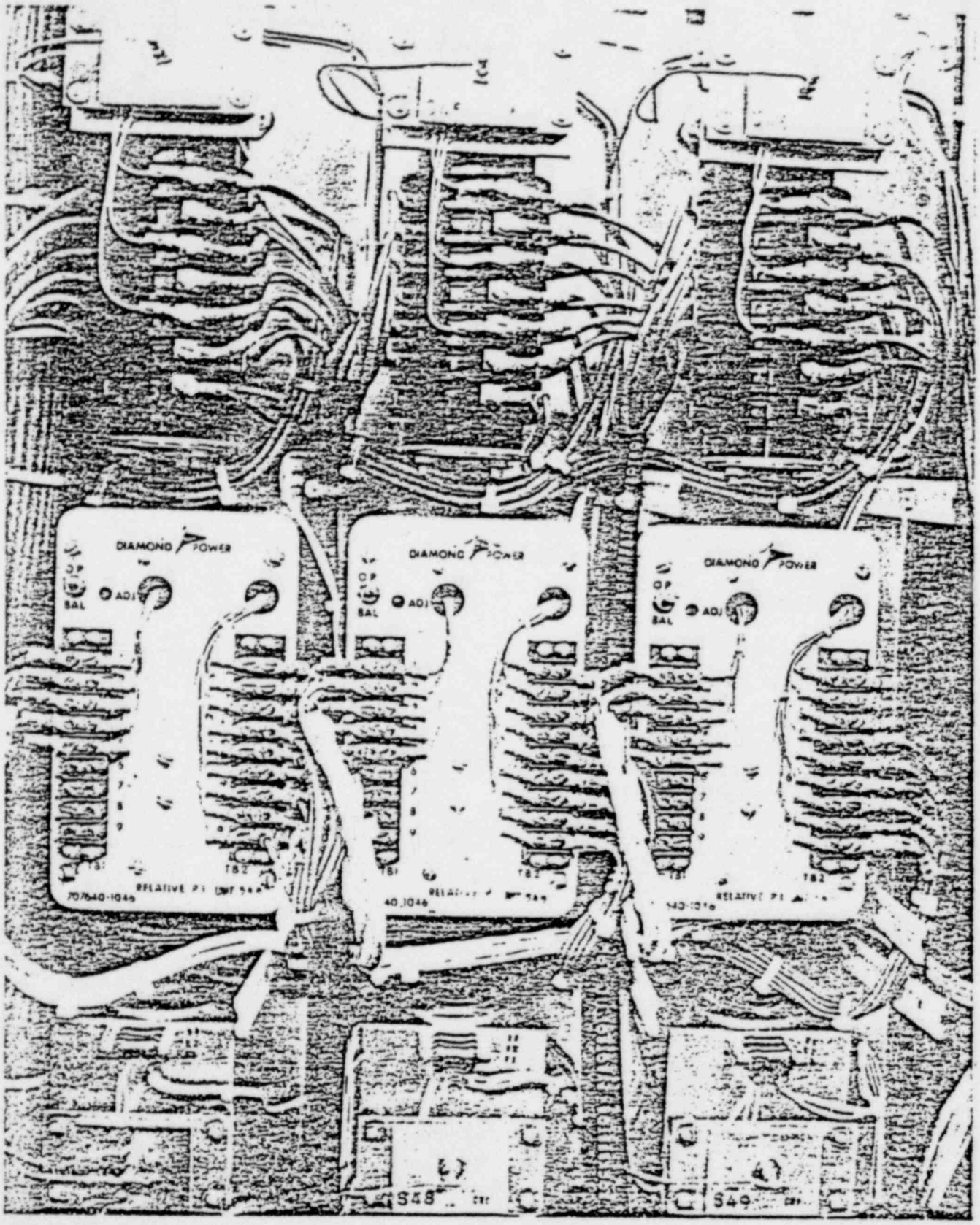

LOCATED IN TC1 THRU TC8

FIGURE 3-29 TRANSFER SWITCH AND RPI ASSEMBLIES

LOCATED IN SCR REGULATING SUPPLIES

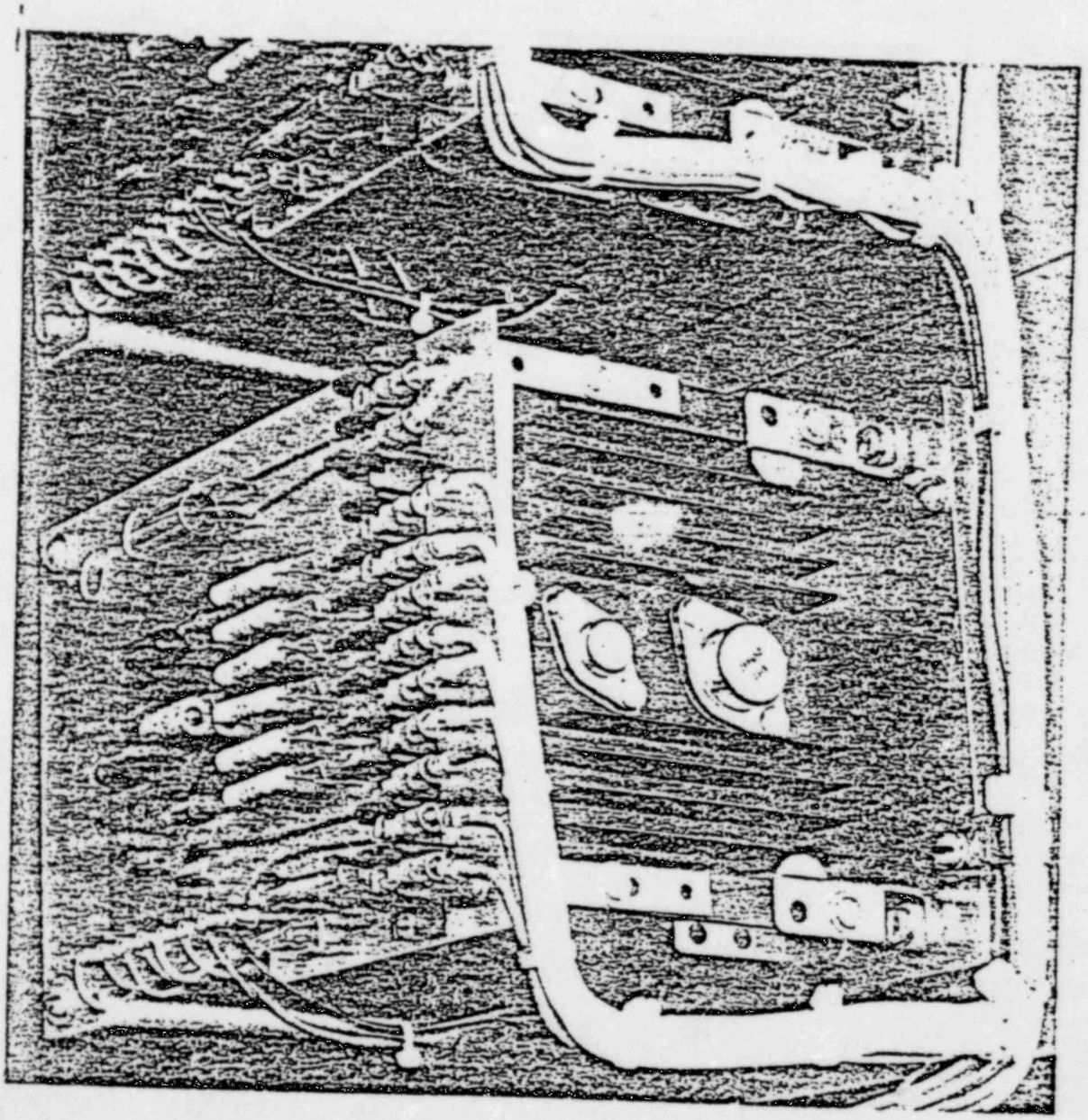

FIGURE 3-36 GATE DRIVE ASSEMBLY

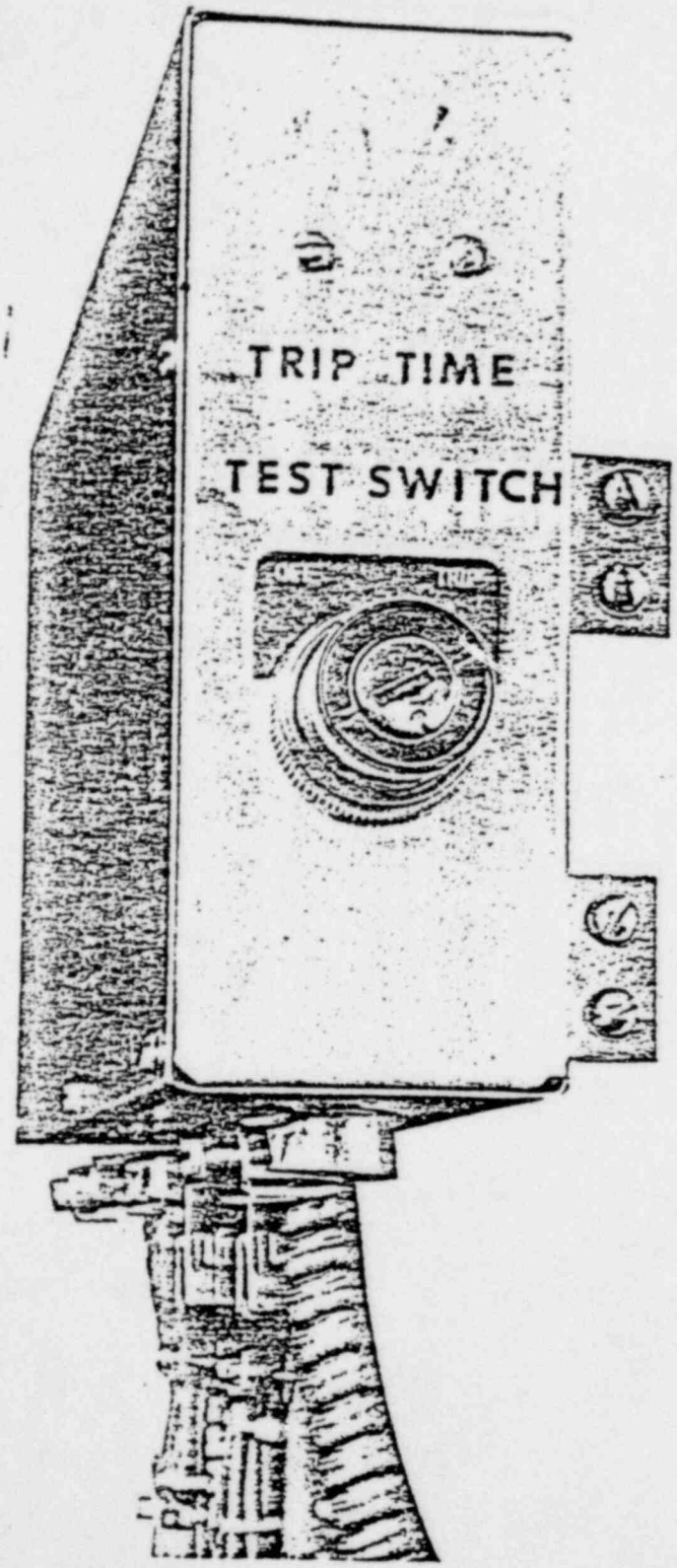

ELECTRONIC TRIP ASSEMBLY WITH KEYLOCK SWITCH IS LOCATED IN AUXILIARY REGULATING SUPPLY

ELECTRONIC TRIP ASSEMBLIES WITHOUT KEYLOCK SWITCHES ARE LOCATED IN GROUPS 5, 6, 7, AND 8 REGULATING SUPPLIES

FIGURE 3-39 ELECTRONIC TRIP ASSEMBLY (SHEET 1 OF 2)

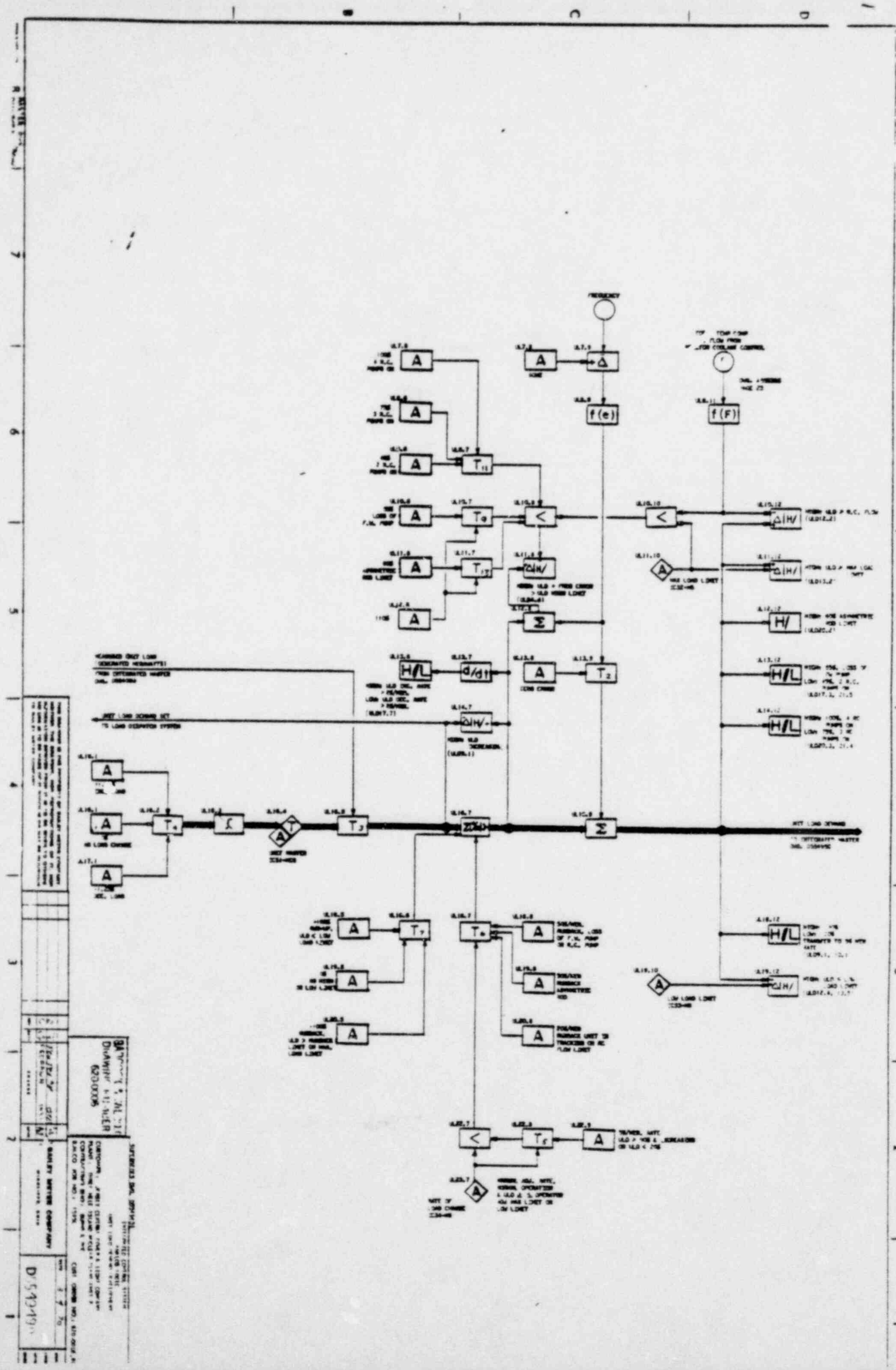

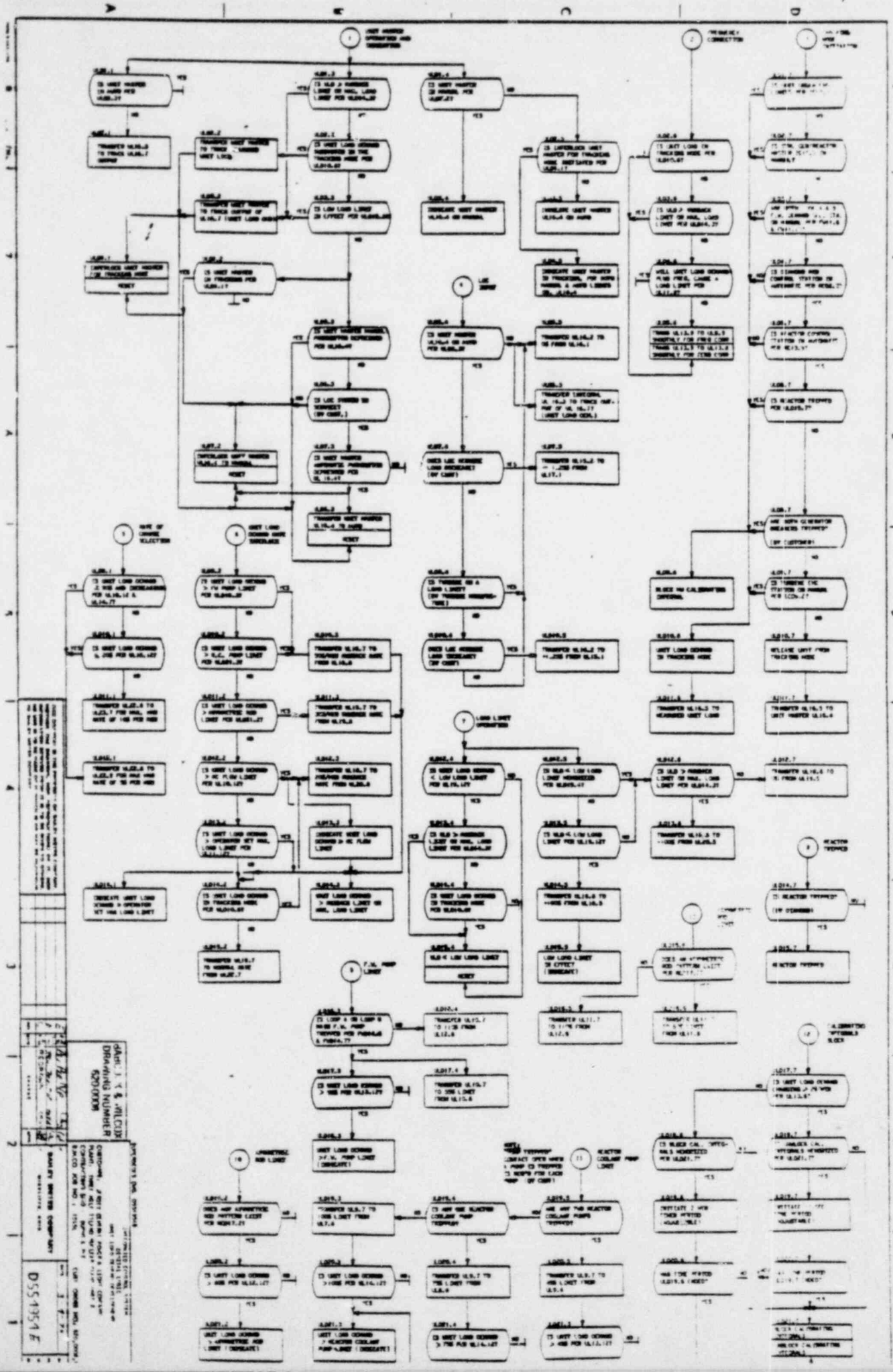

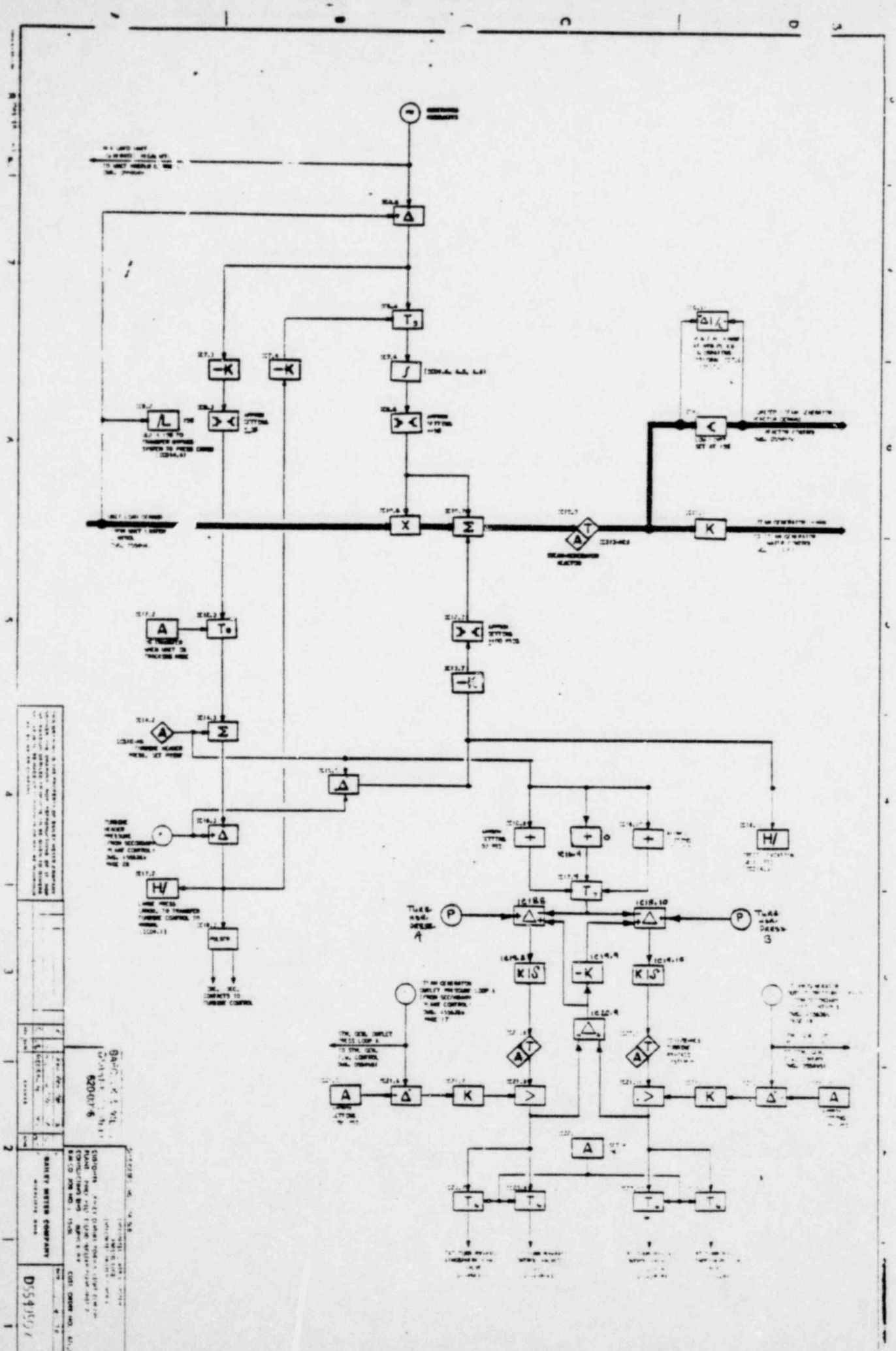

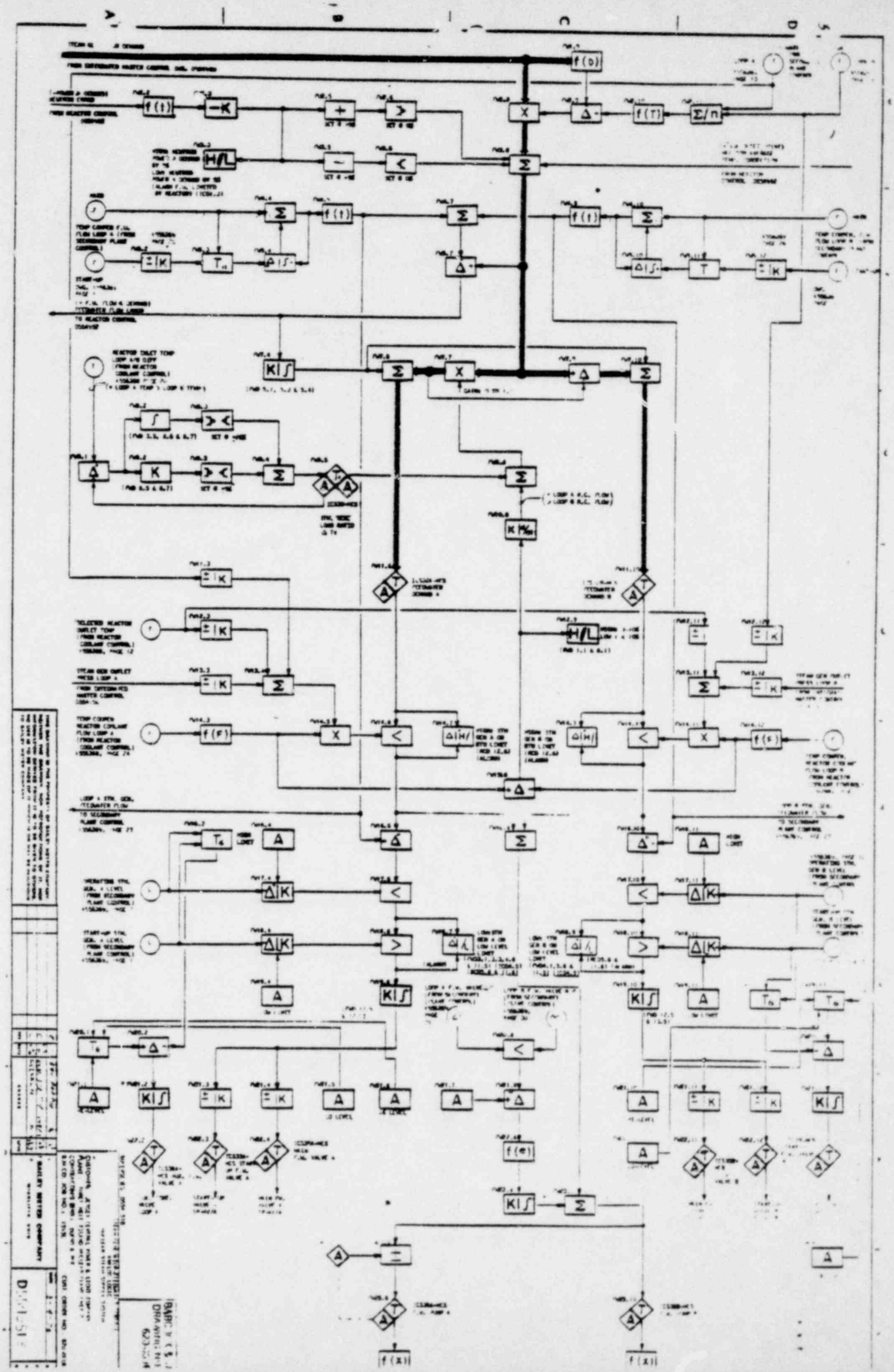

SABCOCK & WILCOX
DHA
WALKER WATER COMPANY
D556111

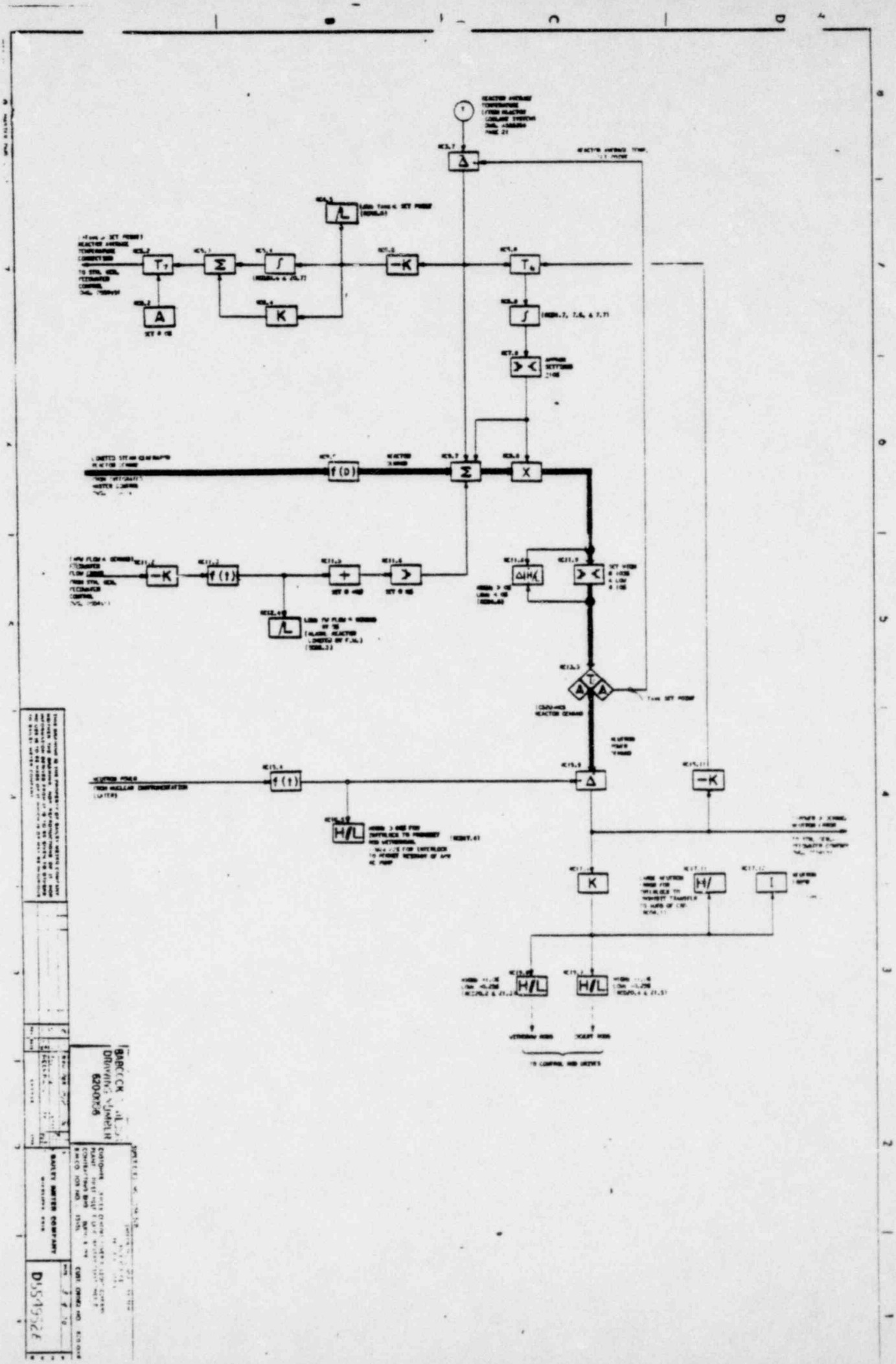
BABCOCK & WILCOX
Drawing Number
620026
BAILEY METER COMPANY
DISAGREE

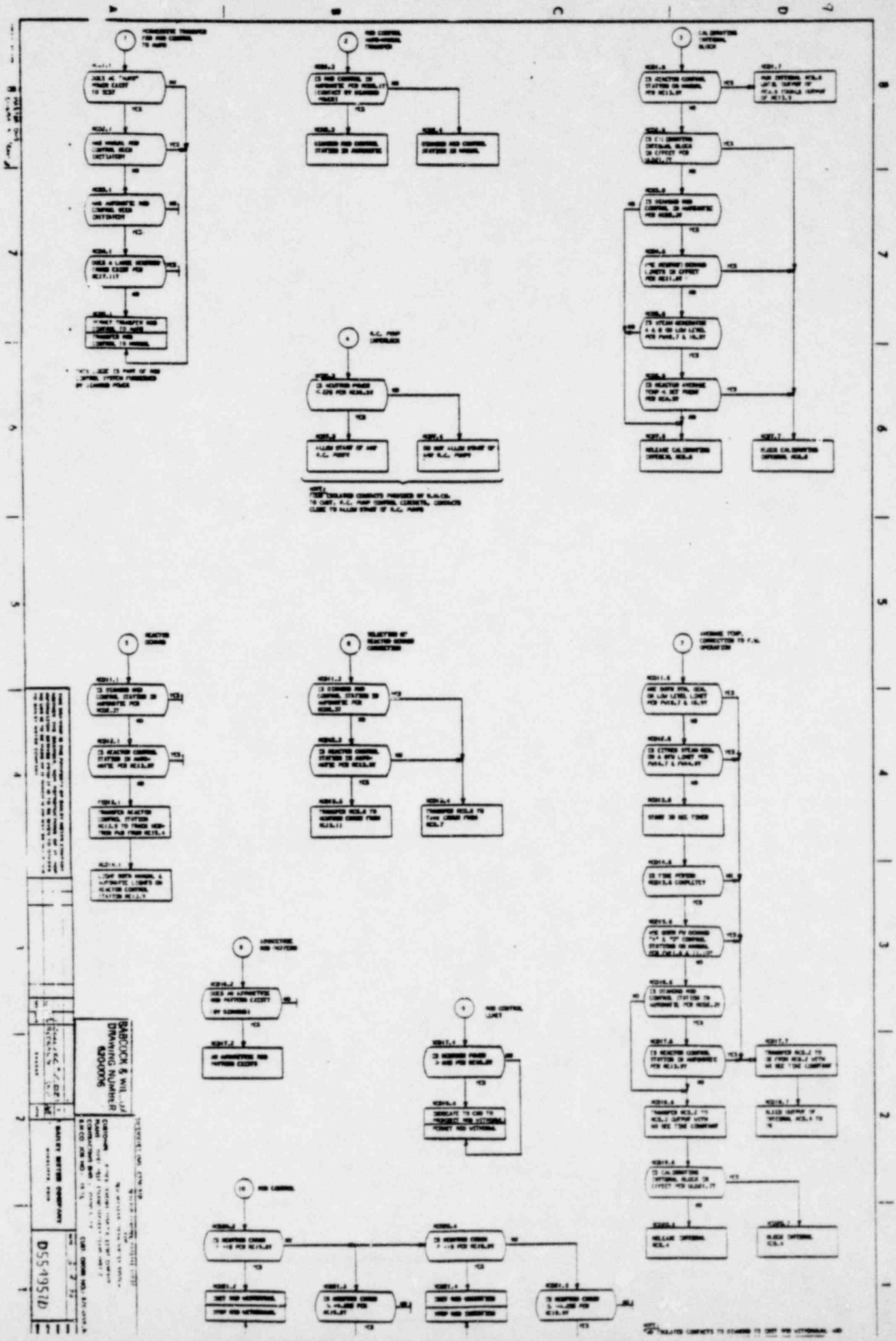
BABCOCK & WILCOX
DRAWING NUMBER
KPD-0096
BABCOCK & WILCOX COMPANY
D55495TD

BABCOCK & WILCOX
DRAWING NUMBER
Bailey
Babcock & Wilcox U.K.
D E P S A

Unit I cycle 5-1

HEALTH PHYSICS

1. List 10CFR20 limits can on personnel exposure to ionizing radiation.
2. When may the above limits be exceeded?
3. What is considered "whole body" for the purpose of radiation exposure?
4. What fast and thermal flux levels correspond to 100mr/week? (based on 40 hrs).
5. What is Met Ed's administrative exposure limit?
6. What must be done to exceed this limit?
7. What are the maximum permissible concentrations in air?
8. What are the radiation limits for vendors, visitors, and other non-plant personnel?
9. What is meant by a "once in a lifetime dose"?
10. Define:
    a. Unrestricted area - (include radiation levels)
    b. Control area
    c. Radiation area
    d. Hi Radiation area
11. When is an area considered to be an airborne radioactivity area?
12. Give the limits for:
    a. Contaminated area
    b. Controlled area
    c. Clean area
13. What is regulated equipment and what are the limits ofr its use?
14. What type respirator would you recomend for emergency R.B. entry?
15. How do we control entry into radiation areas of greater than 1R/hr?
16. Describe the operation of a film badge and dosimeter.
17. When must a dosimeter be rezeroed?
18. What monitoring devices must visitors wear to enter the controlled area?
19. What is the normal sequence for removing protective clothing?
20. What is our radiation limit for laundered protective clothing?

21. When must a radiation work permit be issued?

22. Who initiates an RWP?

23. Who approves and RWP?

24. What information is contained on an RWP?

25. Where do the copies of the RWP go?

26. What is done with the RWP when the work is completed?

27. What is the Standing Radiation Work Permit?

28. What levels must exist in order to allow an unconditional release to a clean area?

29. When will respirators be required?

30. Define:

    a. Special nuclear material

    b. Source material

    c. By product material

    d. REM

    e. Restricted area

    f. curie

    g. radiation

    h. contamination

    i. restricted area

    j. internal exposure

    k. roentgen

    l. RBE

    m. Effective half life

    n. Biological half life

31. What types of personnel monitoring are used at TMI?

32. Basically how does a TLD work?

33. How do we check for contamination?

34. How do you count a smear?

35. What are the possible consequences for exposures of:

    a. < 25 Rem c. > 450 Rem

For the following instruments briefly describe 1) detector operation 2) Radiation detected 3) Detector readout (UNITS and Range)

a. E-520

b. Rad Owl

c. PAC-45

d. PRN-4

e. Teletector

37. What is the action required on a radioactive spill?

38. What are the three basic principles of radiation protection?

39. List the sources of tritium.

a. What are the major problems with tritium?

b. How does tritium enter the body?

c. Is it primarily an external or internal hazard?

40. What is the major source of radiation inside the secondary shield? On the operating floor?

41. What is the primary source of alpha activity at Met Ed?

42. Explain how we get nitrogen 15 gamma.

43. Define each of the following and give CRO required actions:

a. Local Emergency

b. Site Emergency

c. Local Emergency.

RADIATION MONITORING SYSTEM

1. List all automatic actions associated with the Liquid monitors.

2. List all automatic actions associated with the atmospheric monitors.

3. List immediate action on Hi RCS activity.

4. What type detectors are used by the area monitors? Atmospheric monitors? Liquid monitors?

5. Where is the RMS powered from?

6. Describe the flow path thru an atmospheric monitor.

7. What is the function of the green pushbutton on the radiation monitor module?

8. Which of the automatic actions listed in questions 1 and 2 can be defeated?

9. What do the flow alarms an the atmospheric radiation monitors indicate?

10. What will give the radiation monitor system trouble?

11. What is the difference between RM-A2 particulate monitor and the rest of the particulate monitors?

12. What is the function of the norm-off-prog. switch on RM-A2?

13. Describe how radioactive iodine is measured.

14. How can the operator differentiate between a crud burst and failed fuel?

15. What is the purpose of the delay coil upstream of RM-L1?

16. If RM-G8 is reading 1R/Hr, what is the actual radiation level in the reactor building?

17. Of the monitors sensitive to radiation in the R.B., which is the most sensative? Which is second? What are their sensativities?

18. Is it necessary to have a radiation monitoring system channel operating in the R.B. at power? Why? If yes, are there any exceptions?

19. What channel in the RMS would alert the operator to a OTSG tube leak?

20. Why is the RMS channel in question 19 sensative to beta and not gamma?

21. What are the major gasses expected to be released on a OTSG tube rupture?

22. With respect to a steam generator tube rupture, what is a partitioning factor?

ENCLOSURE 1

CATEGORY IV CRO STUDY ASSIGNMENT SHEET

NAME: Woodell

START DATE:

COMPLETION DATE:

ASSIGNMENTS

5th CYCLE 1st HALF

1. Read the following:

   a. Admin. 1003 Radiation Protection Manual
   b. Admin. 1004 Emergency Plan
   c. HP 1613 RWP
   d. HP 1602 Rad. Dose Survey
   e. HP 1603 Neutron Survey
   f. HP 1604 Alpha Survey
   g. HP 1615 Use of Personal Monitoring Devices
   h. HP 1686 Use of Protective Clothing

2. Complete HP Questionaire

3. Read OP 1105-5 (2105-1.8) RMS

4. Complete RMS Questionaire

5. Read the first half of Environmental Tech Specs.

TOTAL POINTS TO DATE FROM ENCLOSURE 2

WRITTEN TEST DATE RESULTS

ORAL TEST DATE RESULTS

ANSWERS MISSED, HANDED IN CORRECTED

DATE:

SIGNATURE OF LICENSED TRAINING COORD.

RMS Woodell

1.) RM-L6 closes WDL-V257

RM-L7 closes WDL-V257, V500 & opens V501

RM-L8 closes WDL-V500 & opens V501

2.) RM-A1 Trips AH-E17A & B

closes AH-D 37 & D39

opens AH-D 36

RM-A 4 TRIPS AH-E 10

RM-A 6 TRIPS AH-E 11

RM-A 7 closes WDG-V47

RM-A 8 TRIPS AHE-10 & E11

closes WDG-V47

RM-A9 closes AH-V1A, 1B, 1C, & 1D

closes WDL-V534 & V535

3.) A) Notify Shift Supervisor

B.) if Due to RM-L1 ALARM, Run A 15 min gross Degas Analysis

C.) if Hi Activity Determined By Routine Sampling, Resample To Confirm

D.) if no plant Evolutions Are in Progress which Could cause A crud Burst & Hi Activity is confirmed By 15 min gross Activity Sample, (>20 mcu/ml) 10XN Reduce Rx Power To <50%.

4.) A.) AREA MONITORS - ION CHAMBERS

B.) ATMOSPHERIC MONITORS - NaI FOR IODINE
B-PLASTIC SCINTILLATION FOR
PARTICULATE & GAS

C.) LIQUID MONITORS - NaI FOR ALL EXCEPT RM-11 HI WHICH
HAS GM TUBE

5.) VBA, VBB, VBC & VBD

6.)

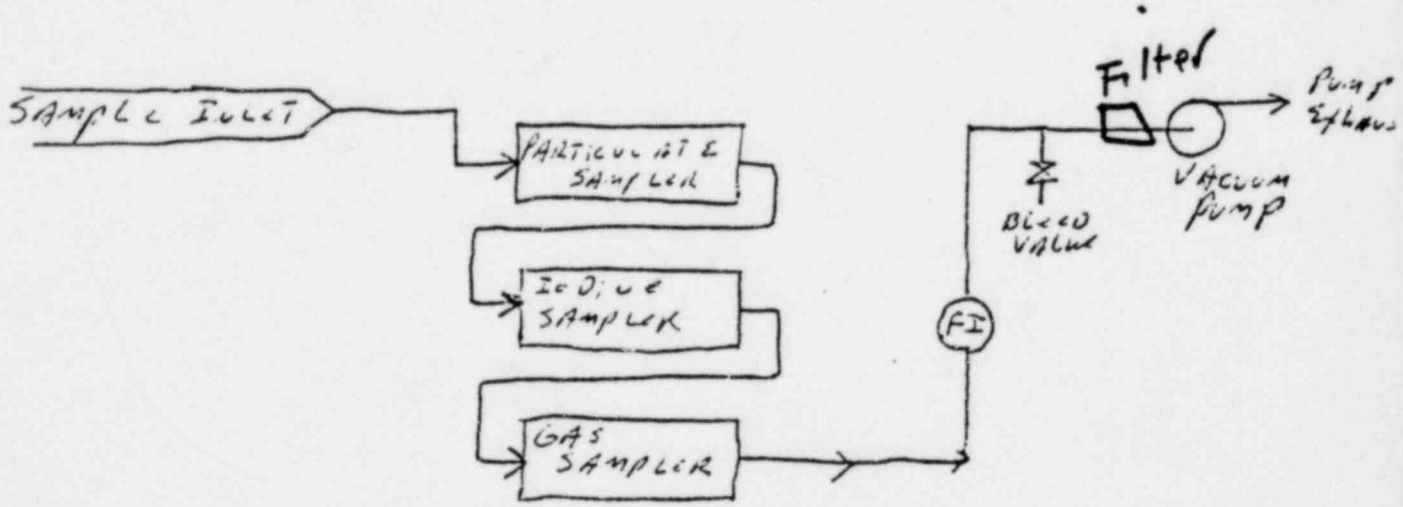

7.) PROVIDES POWER ON INDICATION TO MODULE
RESETS LOCAL ALARM
INDICATES DETECTOR FAILURE

8.) ALL

9.) HIGH ΔP OF ≥ 6.5" Hg ACROSS PARTICULATE OR/AND
IODINE SAMPLERS INDICATING DIRTY FILTER

10.) Loss of Voltage to any monitor, Pointer indicates below zero, RM-A1, 2, 4, 6, 8, 9 Flow Alarm on Part. or Iodine, RM-A1 Filter Tear Alarm.

11.) RM-A2 has movable filter paper for particulate channel - other particulate chnls have fixed filter.

12.) Used to vary filter speed - Norm is 1"/hr Prog is 4"/hr (used for RBldg leak detection)

13.) Iodine is collected in a shielded charcoal canister. The canister contains a Beta-Plastic Scintillator coupled to a photo-multiplier. The Beta emitted by Iodine decay is detected by the scintillation detector which causes it to give off light which in turn is detected by the photo multiplier.

14) By determining I_{131}/I_{133} ratio, Cs_{137}/Cs_{138} ratio sampling for gross alpha activity.

15.) To allow for $_7N^{16}$ decay prior to reaching RM-L1

16.) 100 R/hr

17.) RM-A2 Particulate - 0.05 gpm leak within 1 hr
RM-A2 Gas - 2-10 gpm leak sensitivity

18.) Yes - Section 3.1.6.7 Tech Specs - When Rx critical >2% power two RC leak detection systems of different operating principles shall be in operation (one of the two must be sensitive to radiation)
Exceptions - RM-A2 may be out of service for up to 72 hrs providing samples of R.B. atmosphere are taken every 8 hrs & analyzed for radioactivity.

19.) RM-A5

20.) In the event of an OTSG tube rupture, the non-condensable gases (which are primarily beta emitters) would be carried from the condenser out the plant vent by the vacuum pumps. The particulates would be entrained in the condensate in the hotwell.

21.) I, Kr, Xe, Ar.
Amount of I-131 in condenser

5-1 H.P.

Woodsell

1) Whole Body - 3 R/qtr with NRC form 4 on file
1 1/4 R/qtr without NRC form 4 on file
Not to exceed 5 (N-18)
Skin Dose 7 1/2 R/qtr
Extrimity Dose 18 3/4 R/qtr
10% of Above Limits for Minors

2) Sug. Limits of 100 Rem to save a life
25 Rem to save Equipment

3.) Head & Trunk, Blood forming organs, Lens of Eyes, Gonads

4.) Fast 180 n'/cm²/sec = 2.5 mR/hr = 100 mR/week
Thermal 670 n'/cm²/sec = 2.5 mR/hr = 100 mR/week

5.) 300 mR/week Whole Body Limit - May be exceeded providing obtain permission from HP foreman (Foreman logs that individual has permission to exceed 300 mR/week)
1000 mR/qtr Whole Body Limit - May be exceeded with written permission of HP Supervisor
2000 mR/qtr Whole Body Limit - May be exceeded with written permission of HP Supervisor & ~~[illegible]~~ Unit Supervisor and NRC form 4 on file

6.) See ~~[illegible]~~ 5

7) 3×10^{-10} uc/ml of unknown Isotopes or MPC values listed in 10 CFR 20 for known Isotopes

8.) MAX 1/4 R/qtr whole body or
3 R/qtr if NRC form 4 on file } not to exceed 5(N-18)

9.) A radiation dose that may be received in an emergency situation which will not be applied to the 5(N-18) lifetime whole body radiation dose limit. This only applies to the 1st emergency dose received - any subsequent doses will be ~~applied~~ added to the 5(N-18) limit.

10.) A) Unrestricted area - Any area to which access is not controlled by the licensee for purposes of protection of individuals from exposure to radiation & radioactive materials & any area used for residential quarters.
Limits are Loose contamination - < 1000 DPM β/100cm² < 100 DPM α/100cm², ≤ 0.4 mr/h
Fixed contamination as measured @ 1"

B.) Control area - All plant areas where radiation or contamination has a potential for existing in amounts above limits for clear area. Personnel monitoring devices are required to be worn by all persons in the area & normal entry is controlled by use of access control point.

10.) (cont.) C.) RADIATION AREA - AN AREA IN which A MAJOR PORTION OF THE BODY COULD RECEIVE A DOSE OF >5 MR/HR OR >100 MR/5 CONSECUTIVE (5hr) DAYS

D.) High RADIATION AREA - AN AREA in which A MAJOR PORTION OF THE BODY COULD RECEIVE A DOSE OF >100 MR/HR

11.) ANY AREA IN WHICH AIRBORNE RADIOACTIVE MATERIALS EXIST IN CONCENTRATIONS IN EXCESS OF MPC VALUES FOR KNOWN ISOTOPES AS LISTED IN 10 CFR 20 APPX B OR CONCENTRATIONS IN EXCESS OF 3×10^{-10} uc/ml FOR UNKNOWN ISOTOPES OR CONCENTRATIONS EXCEED 25% OF MPC VALUES LISTED IN 10 CFR 20 APPX B WHEN AVERAGED OVER THE NUMBER OF HOURS IN ANY ONE WEEK IN WHICH INDIVIDUALS ARE IN THAT AREA.

12.) A.) LOOSE SURFACE CONTAMINATION $\geq$ 1000 DPM $\beta\gamma$ /100 cm^2
$\geq$ 100 DPM α /100 cm^2
FIXED CONTAMINATION $\geq$ 0.4 MR/hr @ 1"

B.) LOOSE SURFACE CONTAMINATION < 1000 DPM $\beta\gamma$ /100 cm^2
< 100 DPM α /100 cm^2
FIXED CONTAMINATION < 0.4 MR/hr @ 1"
EXCEPT FOR AREAS WHERE CONTAMINATED AREAS EXIST

C.) LOOSE SURFACE CONTAMINATION < 1000 DPM $\beta\gamma$ /100 cm^2

12.) Equipment of a portable nature of such design which makes decontamination impractical & is routinely stored in areas set aside for control of contaminated equipment. Control & use of regulated equipment will be governed by HP Dept.

14.) Self contained breathing equipment due to its high protection factor

15.) Any area in which radiation levels are 1.0 R/hr or greater shall be locked to prevent unauthorized entry. Entry control is by barricade, RWP, & shift foreman control of keys to locked areas.

16.) Film Badge - The film contained in the film badge undergoes a density change when exposed to radiation - When the film is developed, the film negative is tested for light transmission thru the negative. It is compared with film which is exposed to a known value & the film exposure is based on these comparison tests.

Dosimeter - It is an electroscope with a fixed & a movable quartz fiber wire. The wires are electrically charged to a potential causing the movable quartz fiber wire to move away from the fixed wire. Exposure to radiation causes the dosimeter to discharge & the movable wire

17.) When it reaches ~~175 mrem~~ 75% of scale

18.) Dosimeter & TLD

19.) Remove - Hard hat, tape, rubber gloves, respirator if worn, hood or cap, coveralls, boots, cotton gloves

20.) 0.5 mr/hr @ 1" fixed β/γ - clothing above this limit may be used only in highly contaminated areas & is not for general use.

21.) RWP must be issued for any entry into a radiation area, airborne activity area, contaminated area, high radiation area

22.) Anyone may initiate a RWP - usually the person who is to do the work in the RWP area.

23.) Rad protection supervisor/foreman/rad chem tech & by shift supervisor/foreman

24.) RWP #

JOB LOCATION

(PERSONS ENTERING AREA NAME, SS #, EXPOSURE STAY TIME, IN & OUT)

DESCRIPTION OF JOB

INITIATED BY

JOB FOREMAN

DATE

SURVEY DATE

RADIATION & CONTAMINATION LEVELS

PROTECTION REQUIRED

SPECIAL INSTRUCTIONS

RWP AUTHORIZATION

WORK OR RWP COMPLETION DATE

25.) WHITE - HP/ DEPT.
PINK - CONTROL ROOM
YELLOW - JOB/SITE

26.) PERSONNEL EXPOSURES ENTERED ON YELLOW COPY, JOB FOREMAN SIGNS YELLOW COPY THAT JOB IS COMPLETE. HE THEN RETURNS THE YELLOW COPY TO HP DEPT & ALSO SIGNS THE WHITE COPY SIGNIFYING THAT JOB IS COMPLETE. JOB FOREMAN THEN NOTIFIES SHIFT SUPERVISOR/FOREMAN & PINK COPY IS REMOVED FROM CONTROL ROOM. EXPOSURE DATA FROM YELLOW COPY IS ENTERED ON WHITE COPY BY THE HP DEPT & WHITE COPY IS RETAINED IN PERMANENT HP DEPT RECORDS.

27.) A RWP ISSUED FOR ROUTINE ENTRY INTO AN AREA WHERE A RADIATION HAZZARD EXISTS, BUT WHERE THE INDIVIDUAL IS FAMILIAR WITH THE JOB & HP PROCEDURES & RADIATED HP CHECKOUTS

2) Loose Surface Contamination ≥ 1000 DPM β γ / 100 cm²
≥ 100 DPM α / 100 cm²

Fixed contamination ≥ 0.4 mR/hr @ 1"

29.) Respiratory Protection Required if the following Limits are Exceeded –
Unidentified Mixed Particulate β γ ≥ 3×10⁻¹⁰ uci/ml
Identified Isotopes – > MPC as specified 10CFR20 Appx. B

30.) A) Special Nuclear Material – Plutonium, U233, Uranium, Uranium Enriched in U233 or U235 or any other Isotope the Commission Decides, Which is NOT A Source.

B.) Source Material – Uranium, Thorium or any combination Thereof Which is NOT classified AS Special Nuclear Material. < .05% U
– Th
– Both

C.) By Product Material – Radioactive material yielded in or made Radioactive by Exposure to the Radiation incident in the process of producing or utilizing Special Nuclear Material.

D.) REM – A measure of the Dose of any Ionizing Radiation in Terms of its Estimated Effect on Radiation Tissue relative to 1 R of X-ray

30.) (cont.) E.) RESTRICTED AREA - ANY AREA TO WHICH ACCESS IS CONTROLLED BY THE LICENSEE FOR PURPOSES OF PROTECTION OF INDIVIDUALS FROM EXPOSURE TO RADIATION OR RADIOACTIVE MATERIALS & SHALL NOT INCLUDE ANY AREA USED FOR RESIDENTIAL QUARTERS.

F.) CURIE - UNIT OF RADIATION 3.7×10^{10} DISINTEGRATIONS/S

G) RADIATION - PARTICLE OR ENERGY GIVEN OFF BY A NUCLEUS BY FISSION OR DECAY.

H.) CONTAMINATION - REMOVABLE OR FIXED RADIOACTIVE MATERIAL ON AN OBJECT.

I.) RESTRICTED AREA - SEE ~~R~~ 30 - E

J.) INTERNAL EXPOSURE - INGESTION, INHALATION, ABSORPTION OF RADIOACTIVE MATERIAL WHICH WILL RESULT IN RADIOACTIVE EXPOSURE OF BODY TISSUE

K.) ROENTGEN - A MEASURE OF X OR γ RADIATION 83.8 ERGS/GRAM OF AIR

L.) RBE - RAD X RBE = REM - RBE IS THE QUALITY FACTOR USED TO COMPARE A RAD OF A TYPE OF

29) (cont.) (M) Effective Half Life – The combined effect of a radioactive material's natural half life & bio half life

$$\text{Effective } t_{1/2} = \frac{(\text{Nat } t_{1/2})(\text{Bio } t_{1/2})}{(\text{Nat } t_{1/2}) + (\text{Bio } t_{1/2})}$$

N.) Biological Half Life – The amount of time it takes the body to remove one half the isotope being evaluated.

31.) TLD's, Dosimeters, Neutron film badges, Neutron dosimeter

32.) A TLD contains lithium fluoride & calcium fluoride in a crystal form. When exposed to ionizing radiation, the electrons are raised to a metastable state. When the crystal is heated to ≈ 240°F the metastable electrons are raised to an unstable state. The unstable electrons return to the original orbit (ground state) & in so doing, emit light which is detected by a photomultiplier. The amount of light emitted is directly proportional to the amount of radiation the crystal was exposed to.

Swipe surveys, portable monitors, friskers, hand & foot monitors

34.) 1ST Run Bkgd & Efficiency checks on Detector To Be Used. Then, count smear (usually for one min.). Use of The formula $2\sqrt{Bkgd} + Bkgd$ is Used To Determine Min. Detectable Activity. If smear counts are > $2\sqrt{Bkgd} + Bkgd$; Then The following formula is used To Determine Activity in DPM.

$$\left[\text{Smear cpm} - \left(2\sqrt{Bkgd} + \cancel{Bkgd}\right)\right] \div \text{\% Efficiency} = DPM$$

35.) 0 - 24 Rem — No obvious injury
25 - 50 Rem — Some Blood changes
50 - 100 Rem — Blood cell changes, Some injury, No Disability
100 - 200 Rem — injury & possible Disability, Loss of Hair @ ≈ 200 Rem
200 - 400 Rem — Disability certain, 1st signs of Death
450 Rem — 30 LD 50
600 Rem — 30 LD 100

36. A.) E-520 βγ Detector - Has one internal & one external GM tube. An incident will produce secondary ionization (gas Amplification) Resulting in Discharge of The Tube. Range 0 - 2000 mR/hr

B.) Rad Owl βγ & X-Ray Detector - Utilizes an Ion chamber. An incident produces ion pairs. Voltage of chamber is sufficient to prevent

36.) B) (Cont) incident is counted. Range 0-500 R/hr
Also, has integrating range of 0-500 mr/hr

c.) PAC-45 - Scintillation Detector for α.
An incident α strikes the Zinc sulfide crystal which causes the crystal to give off a photon of light. The light is detected by a photomultiplier tube. Meter scale 0 - 2×10^6 cpm

D.) PRN-4 Fast & Thermal n'. Uses BF_3 Detector
When a thermal n' interacts with a $_5B^{10}$ atom in the BF_3 gas, an α particle is emitted which causes secondary ionization in the detector. This ionization causes an electrical pulse on the center electrode of the detector which is amplified by the PRN-4 CKTs. With the BF_3 chamber removed from the shield, it detects thermal n's. With the BF_3 chamber in the shield it detects fast n's. The shield consists of a cadmium shell filled with polyethyline. The cadmium absorbs thermal n's & the poly thermalizes fast n's so they can be detected by the BF_3 chamber. Range is 0-5000 mr/hr

E.) Teletector - β γ Uses GM tube which works same as GM tube in E-520 except tube is @ end of 13 foot extendable pole. Range 0-1000 R/hr

37.) A.) Stop spill if possible

B.) Notify control room, people in area, HP Dept.

C.) Contain spill - use rags, blotting paper etc - Secure ventilation to & from area

D.) Minimize exposure to contamination & radiation Isolate area - personnel in area are required to wear protective clothing & respirators.

E.) Decontaminate personnel as soon as possible

F.) Decon spill area by approved procedures.

35.) Time, distance, & shielding

36.) A.) [redacted], $D^2 + o^{n1} \rightarrow H^3$

B.) $o^{n1} + {}_5B^{10} \rightarrow {}_5B^{11} \rightarrow 2\ {}_2He^4 + H^3$

C.) $o^{n1} + {}_3Li^6 \rightarrow {}_2He^4 + H^3$

D.) $o^{n1} + {}_3Li^7 \rightarrow {}_2He^4 + H^3 + o^{n1}$

E.) Tertiary fission

B.) Tritium is inhaled, ingested, absorbed

C.) Internal HA 33 ARP

40.) inside secondary shield - N^{16} γ

operating floor - o^{n1} flux, γ

41.) Failed fuel

42.) ${}_8O^{16} + o^{n1} \rightarrow {}_8O^{17} \rightarrow H^1 + ({}_7N^{16}) + \gamma$

43.) A) Local Emergency - Defined As:

1.) Unexpected increase in radiation or airborne activity in a work area

2) Radioactive spill > 25 FT^2, with radiation levels > 2 mR/hr @ 1/2" from surface or > 10^{-2} uc/mL

3.) 2 or more area monitor alarms in one building

4.) Fire or flooding which could affect the release of radioactivity

B.) Site Emergency - Defined As:

1.) Area monitor alarms in two or more bldgs.

2.) RM-68 Alert Alarm

3.) Rx Bldg Evacuation Alarm

4.) Instantaneous gas release 100 times limit

5.) 125 mR/hr @ security fence

6.) Loss of Rx coolant pressure with High Rx Bldg pressure and/or Hi Rx Bldg Sump Alarm

C.) General Emergency - Defined As:

1.) RM-68 High Alarm

2.) 125 mR/hr or greater @ site boundary

3.) Liquid Release of > 6.8×10^{-3} uc/mL

Actions -

A) Local Emergency - Notify Shift Foreman/Supervisor that Local Emergency exists - Announce over page system as directed by SF/SS that Local Emergency exists, including location &

43) (cont.) B) SITE EMERGENCY - NOTIFY SF/SS THAT SITE EMERGENCY EXISTS. SOUND RADIATION EMERGENCY ALARM AS DIRECTED BY SF/SS. MAKE APPROPRIATE ANNOUNCE OVERPAGE SYSTEMS THAT SITE EMERGENCY EXISTS (AS DIRECTED BY SF/SS) TAKE APPROPRATE ACTIONS AS DIRECTED BY EMERGENCY PROCEDURES.

C.) GENERAL EMERGENCY - CRO ACTIONS ARE SAME AS FOR SITE EMERGENCY

ENCLOSURE 1

CATEGORY IV CRO STUDY ASSIGNMENT SHEET

UNIT 2

NAME: _____ START DATE: _____

COMPLETION DATE: _____

ASSIGNMENTS _____ 5th CYCLE 1st HALF

1. Read the following:

   a) Admin. 1003, Radiation Protection Manual
   b) Admin. 1004, Emergency Plan
   c) HP 1613, RWP
   d) HP 1602, Rad. Dose Survey
   e) HP 1603, Neutron Survey
   f) HP 1604, Alpha Survey
   g) HP 1616, Use of Respiratory Protection
   h) HP 1686, Use of Protective Clothing
   i) HP 1621.2, Release Radioactive Liquid
   j) HP 1622.2, Release Radioactive Gas
   k) Radiation Emergency Procedures (1670.1) (1670.2) (1670.3)
   l) HP Handout
   m) HP 1684

2. Complete HP Questionnaire

3. Read the following:

   a) OP 2105-1.8, RMS
   b) OP 2105-1.12, RMS Setpoints
   c) RMS Handout

4. Complete RMS Questionnaire

5. Read the first half of Environmental Tech. Specs.

6. Read FSAR, Chapter 15, Section 1.18

7. Review B&R Drawing 3009

TOTAL POINTS TO DATE FROM ENCLOSURE 2 _____

WRITTEN TEST DATE _____ RESULTS _____

ORAL TEST DATE _____ RESULTS _____

ANSWERS MISSED, HANDED IN CORRECTED _____

DATE: _____

SIGNATURE OF LICENSED TRAINING COORD.

REFERENCES

No.

1. HP Handout (Information, Instrumentation, 10CFR20)
2. 1003
3. 1684
4. 1613
5. RMS Handout
6. 2105-1.8
7. 2105-1.12
8. B&R Drawing 3009
9. Tech. Spec. 3.4.6.1
10. FSAR Chapter 15, Section 1.18

HEALTH PHYSICS

5-1
QUESTIONNAIRE

1. Define the following terms - include any applicable limits. (Reference: #1 & #2)

   a. Effective half-life
   b. Biological half-life
   c. Unrestricted area
   d. Restricted area
   e. Clean area
   f. Controlled area
   g. Contaminated area
   h. Radiation area
   i. High radiation area
   j. Airborne radiation - contaminated area
   k. Special nuclear material
   l. Source material
   m. By-product material
   n. Rem
   o. Curie
   p. Radiation
   q. Contamination
   r. Quality Factor (QF or RBE)
   s. RAD
   t. "Whole Body"

2. What are the limits for "Emergency and Accidental Exposure? (Reference: #2)

3. List the three (3) principles of Radiation Protection which enable "A.L.A.R.A." to be satisfied. (Reference #1)

4. List the 10CFR20 and Administrative limits on personnel exposure. Include any actions required to allow the maximum exposure to be received. (Reference #1, #2 & #3)

5. Briefly explain the construction and "theory of operation" for the following: (Include requirements for use)

   a. Film badge
   b. Dosimeter
   c. TLD
   (Reference #1 & #2)

6. List the major sources of radiation in the reactor building. Briefly explain how each is produced. (Reference #1)

7. a) List four (4) sources of tritium in order of production.

   b) Briefly explain the four (4) ways tritium enters the body and why we are concerned if tritium is in the body. (Reference #4)

8. For each of the following instruments provide;

   i) radiation detected
   ii) range(s) of indication
   iii) theory of detector operation

   a) E-520
   b) RO-2
   c) PIC-6
   d) PAC 4S
   e) PNR-4
   f) Teletector
   (Reference #1)

9. If you have a ten (10) curie point source of Co-60 (emits 2 gammas - 1.33 and 1.17 Mev) and pieces of lead that are 2" thick (tenth thickness) determine the following:(SHOW ALL WORK)

   a) The dose rate (unshielded) two (2) feet from the source.
   b) The dose rate five (5) feet from the point source.
   c) Assuming you want to work five (5) feet from the source how many pieces of shielding are required to limit your exposure to:
      1) Weekly administrative limit
      2) 100 mRem in (eight (8) hours)
   (Reference #1)

10. You have a tank that is five (5) feet high, five (5) feet long and five (5) feet wide, which reads 10 R/hr on contact. (SHOW ALL WORK)

    a) Calculate the dose rate at the following distances from the tank:

       1. 5 ft.
       2. 25 ft.
       3. 60 ft.

    b) At what distance from the tank would the following be placed, (area is not normally occupied)

       1. High radiation area sign?
       2. Radiation area sign?
    (Reference #1, #2, & #4)

11. A radiation work permit (RWP) is required for personnel protection:

    a) When must an RWP be issued? (conditions)
    b) Who initiates an RWP?
    c) Who approves an RWP?
    d) Where are the copies of the RWP distributed?
    e) What is a standing RWP?
    f) How long is an RWP or Standing RWP valid?
    g) Briefly explain what information is on an RWP.
    h) What must be done with the RWP when the work is completed?
    (Reference #2 & #4)

UNIT II RMS
QUESTIONNAIRE

1. List all the automatic actions associated with the process monitors (liquid, atmospheric) and which can be defeated. (Ref. #5, #6, & #7).

2. List the type of detectors and briefly describe the theory of operation for the following:

   a) area monitors
   b) atmospheric monitors
   c) liquid monitors
   (Ref. #5 & #6)

3. Describe the flowpath through the atmospheric monitors. (Ref. #5)

4. Describe the function of the "norm-off-prog" switch on the particulate monitors. (Ref. #5)

5. If HPR 214 is reading 100 mR/hr, what is the actual radiation level? Briefly explain how this is accomplished. (Ref. #5)

6. It is necessary to have a radiation monitoring system in the Reactor Building during power operation.

   a) Briefly explain why.
   b) List in order of preference.
   c) List the actions required if the radiation monitoring system for the reactor building is out of service.
   (Ref. #9)

7. a) What are the major gases expected to be released if an OTSG tube rupture occurs?
   b) Briefly describe "partitioning factor" as it is used following an OTSG tube rupture. (Ref. #10)

8. Which process (radiation) monitors, that have interlocks associated with them, are <u>not</u> indicated in the control room? (Ref. #5)

9. List the functions of the pushbuttons (red, green, amber, etc.) on the radiation monitor modules for:

   a) area monitors
   b) process monitors
   (Ref. #5 & #6)

RADIATION PROTECTION - HEALTH PHYSICS INFORMATION

TMI Training Dept.

RADIATION PROTECTION - HEALTH PHYSICS INFORMATION

1. Radiation - defined in 10CFR20, Section 20.3.12.

2. Contamination - Radioactive material where we do not want it. It can be loose; can be cleaned up, or fixed; cannot be cleaned up.

3. Contamination is of concern because it may enter the body. There are four (4) ways it can enter the body:

   a) Ingestion - eating or drinking
   b) Inhalation - breathing
   c) Injection - through an open wound
   d) Absorption - through the pores in the skin

   After contamination is in the body it poses two (2) problems, 1) damage to vital organs; 2) long retention in the body. The body will eliminate contamination biologically, the time it takes for one-half of the contamination to be eliminated is called the biological half-life (T_B). If the contamination is radioactive it also has a half-life called the Radiological Half-Life (T_R). The combination of Radiological and Biological Half-Lives is the time it takes contamination (radioactive) to be reduced by one-half in the body, this is called the Effective Half-Life (T_{eff}).

   Effective Half-Life can be calculated as follows:

$$T_{eff} = \frac{T_B \times T_R}{T_B + T_R}$$

4. Radiation exposure doses are classified in two ways:

   1. Acute exposure - received in a short time (< 4 hrs.)
   2. Chronic exposure - received over a long time (> 4 hrs.)

   The effects of an acute exposure, without medical attention are given in the following table

TABLE 1 BIOLOGICAL EFFECTS OF RADIATION

Dose (rem)	Probable Effects
0-100	No injury No disability
100-200	Injury - nausea, vomiting, diarrhea, hair loss, skin reddening. No disability
200-300	Injury - same as above, plus internal bleeding. Disability - blood disorders and some deaths.
Above 300	Severe injury - same as above, except more severe Disability - severe blood disorders and more deaths
• 400	LD-50
• 600	LD-100

The acute exposure results in four (4) stages of illness, called radiation syndrome.

The four stages are:

1) Initial illness
2) Apparent recovery
3) True illness
4) Death or recovery

The chronic esposure is the type you get as a radiation worker. It is important to keep this as low as possible because of three (3) possible risks. The risks are reduced if the chronic exposure is low because the body has time to repair itself.

The three (3) risks of chronic exposure are as follows:

1) Increased risk of cancer.
2) Shortened life span.
3) Genetic mutation.

5. Radiation protection units:

a) Roentgen: a measure of the ionization produced by x-ray or gamma radiation in air.
b) Rad: 10CFR20, Section 20.4.b
c) Rem: 10CFR20, Section 20.4.c
d) Curie: 10CFR20, Section 20.5

The rem is equal to the dose in Rads multiplied by an appropriate Quality Factor (QF, also known as RBE). Commonly used Quality Factors as listed in the following table:

TABLE 2 QUALITY FACTORS

Radiation Type	Quality Factor
Gamma	1
Beta	1
Thermal Neutron	3
Fast Neutron	10
Alpha	20

6. Partial explanation of 10CFR20, Appendix B MPC Limits:

Figure 1 shows a portion of 10CFR20, Appendix B. The first column lists the elements that could get into the air or water. In this sample portion of Appendix B, the elements are cobalt (Co), with an atomic number of 27, and copper (Cu), with an atomic number of 29. The elements are listed alphabetically for easy reference. The next column lists the radioactive isotopes of the elements that are actually the contaminants in air and water. In our sample, the isotopes are Co-58, Co-60, and Cu-64.

The next two columns make up Table 1, which refers entirely to in-plant areas, not to air and water that can be released out of the plant. Column 1 of Table 1 gives the MPC for air: Column 2 gives the MPC for water. The units for each are microcuries per milliliter (μCi/ml). Notice that two lines are used for each isotope. The first line gives values for instances when the isotope is soluble (S) in the body, and the second line gives values to be used when the isotope is insoluble (I) in the body.

The last two colums shown in Figure 1 makeup Table 2, which deals entirely with air and water released outside the plant. Again, the units are microcuries per milliliter. The MPC values associated with Table 2 are such that a person can be in an environment with these MPC values 24 hours a day, 7 days a week, 52 weeks a year without exceeding federal dose limits for the general population.

FIGURE 1 PORTION OF 10CFR20, APPENDIX B

		TABLE 1		TABLE 2	
Element (atomic number)	Isotope	Column 1 Air (μCi/ml)	Column 2 Water (μCi/ml)	Column 1 Air (μCi/ml)	Column 2 Water (μCi/ml)
Cobalt (27)	Co-58 S	8×10^{-7}	4×10^{-3}	3×10^{-8}	1×10^{-4}
	I	5×10^{-8}	3×10^{-3}	2×10^{-9}	9×10^{-5}
	Co-60 S	3×10^{-7}	1×10^{-3}	1×10^{-8}	5×10^{-5}
	I	9×10^{-9}	1×10^{-3}	3×10^{-10}	3×10^{-5}
Copper (29)	Cu-64 S	2×10^{-6}	1×10^{-2}	7×10^{-8}	3×10^{-4}
	I	1×10^{-6}	6×10^{-3}	4×10^{-8}	2×10^{-4}

To determine how many hours per week a person can work in an area, use the following formula: (staytime for values from Table 1)

$$\frac{\text{No. of Hours}}{\text{Week}} = \frac{\text{MPC}}{\text{Actual Value}} \times \frac{\text{40 Hours}}{\text{Week}}$$

If area airborne contamination is >25% of MPC, it must be posted as an Airborne Radioactivity Area and if > MPC respiratory protection is required.

The in-plant Table 1 MPC's for water deal with drinking water in the plant. These values are based on workers being in the area for 40 hours per week and drinking an average amount of water for 50 years.

7. Protection techniques against radiation:

a) Time: calculate time or dose from the following formula:
Dose = Time x Dose Rate

b) Distance: Calculate the dose rate at different distances from the source of radiation, (Line, Point or Plane) using the following formulas:
$R_1 = R_2$, $R_1D_1 = R_2 D_2$, $R_1D_1^2 = R_2D_2^2$, $R = \frac{6CE}{D2}$

Where: R = Dose Rate C = Number of Curies
D = Distance E = Total effective gamma energy (Mev)

Just as it is common sense to spend as little time as possible in areas where you are exposed to radiation, it is also common sense to stay as far away from a radiation source as possible. The farther away a person is from a source of radiation, the smaller the dose he will receive. The actual decrease in the dose rate with distance depends on the type of radiation emitted and the relative physical size of the source.

The type of radiation emitted by a radiation source can be alpha, beta, gamma or neutrons. The type makes a big difference when the effects of distance are being considered, because some types of radiation travel farther in air than other types. Alpha radiation, for example, is stopped in air in a matter of centimeters. Beta radiation can travel several meters in air, and gamma radiation can travel kilometers in air. Since most of the radiation we are concerned with in the plant is gamma radiation, we will center our discussion on gamma radiation.

The way in which distance affects the dose rate from a source of gamma radiation really depends on the relative physical size of the object emitting the radiation. If the radiation source is very small, with the radiation being emitted from it in all directions, there is a large decrease in exposure as distance is increased. This type of source is called a point source. If the source is large, such as, for example, a large tank that contains radioactive material, the exposure does not decrease much, if at all, relative to increased distance. This type of source is called a plane source, because the radiation appears to be emitted not from a point, but from a plane.

All sources, no matter how large, can take on the characteristics of a point source if the distance from the source to the dose point is great enough. As a general rule, an object will have the characteristics of a point source at a distance greater than ten times the largest dimension of the object emitting the radiation. As an example, assume that the radiation source is a tank that is 8 feet long, 4 feet wide, and 10 feet high. Height is the largest dimension, and ten times the height is 100 feet. At a distance greater than 100 feet, the tank will have the characteristics of a point source, and there would then be a dramatic decrease in the exposure rate with increased distance beyond 100 feet. (Refer to figure 2).

The third type of radiation source is a line source, such as a pipe that contains radioactive material. With a line source, there will be a decrease in the exposure rate as distance is increased, but the decrease is not as great as with a point source.

Any large object can take on the characteristics of a plane source, a line source, or a point source, depending on distance. With a large tank, for example, if you are close to it, it has the characteristics of a plane source. As you move farther away from it, it takes on the characteristics of a line source, and, when you get far enough away, it assumes the characteristics of a point source.

Of the three types of sources, the point source is the most important, because of the decrease in the exposure rate with increased distance. There is an equation that can be used to calculate the change in exposure

as distance from the source varies. The equation is called the <u>inverse square law</u>, and it is written as follows: $R_1D_1^2 = R_2D_2^2$

Figure 2

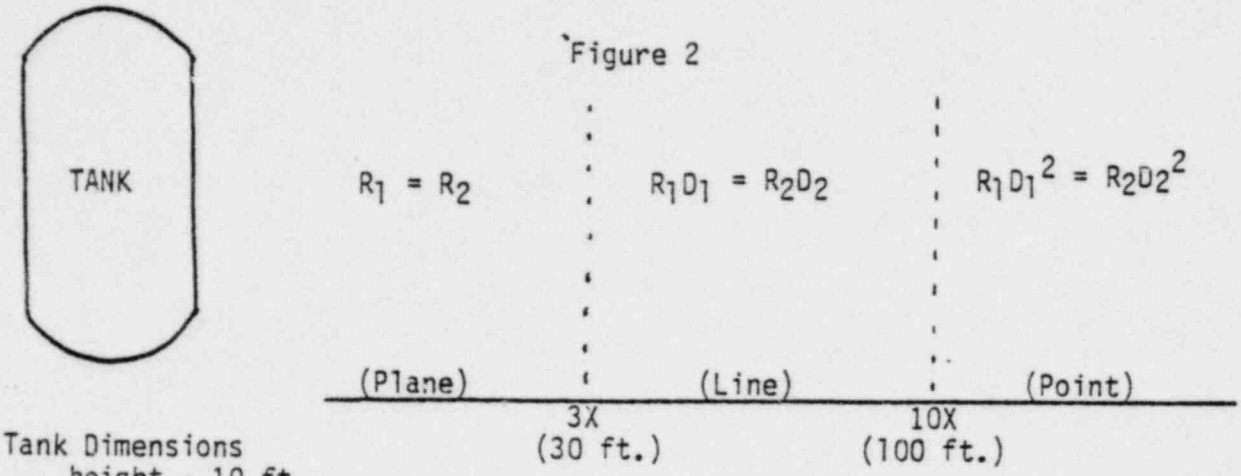

Tank Dimensions
height - 10 ft.
length - 8 ft.
width - 4 ft.

c) Shielding: Calculate dose rate or amount of shielding required from the following formulas:

$I=Ioe^{-ux}$, $I=IoBe^{-ux}$, $I/IO=0.1^x$, $I/IO=0.5^x$

Where I = final dose rate
Io - Initial dose rate
B - Buildup factor
u - attenuation coefficient (cm^{-1} or $in.^{-1}$)
x - thickness of shield (cm. or in.)
e - natural function (2.718)

Refer to table 3 for typical half thicknesses.
Refer to table 4 for typical tenth thicknesses.

Table #3 Half-Value Thickness for Various Materials

Energy (Mev)	Half-Value Thickness (inches)				
	Air (in miles)	Water	Ordinary Concrete	Iron	Lead
0.1	0.022	1.634	0.688	0.101	0.005
0.2	0.027	2.009	0.938	0.251	0.027
0.5	0.038	2.829	1.335	0.419	0.166
1.0	0.053	3.872	1.828	0.583	0.352
2.0	0.073	5.544	2.605	0.818	0.527
3.0	0.093	6.896	3.194	0.961	0.571
4.0	0.107	8.049	3.667	1.052	0.573
6.0	0.132	9.928	4.331	1.142	0.552
8.0	0.149	11.379	4.779	1.177	0.524
10.0	0.164	12.464	5.058	1.181	0.492

Table #4 Tenth-Value Thickness for Various Materials

Energy (Mev)	Tenth-Value Thickness (inches)				
	Air (in miles)	Water	Ordinary Concrete	Iron	Lead
0.1	0.071	5.425	2.282	0.335	0.015
0.2	0.089	6.667	3.112	0.835	0.089
0.5	0.125	9.388	4.432	1.391	0.551
1.0	0.175	12.849	6.069	1.936	1.168
2.0	0.242	18.400	8.647	2.715	1.748
3.0	0.310	22.836	10.599	3.190	1.896
4.0	0.356	26.713	12.169	3.490	1.901
6.0	0.439	32.951	14.375	3.789	1.831
8.0	0.496	37.767	15.862	3.905	1.740
10.0	0.543	41.367	16.788	3.918	1.634

8. Radiation Detection Principles

a) Photon I[illegible]action (Gamma)

A photon is radiation in the form or a wave, such as a gamma, x-ray, or visible light. The methods of photon interaction with matter were first explained by Einstein. He indicated that the type of interaction depended to a great extent on the energy of the photon. Based on Einstein's thoughts, it has been determined that there are three basic methods of photon interaction with matter:

- Pair production - predominant in high energy photons
- Compton scattering - predominant in mid-energy range photons
- Photoelectric effect - predominant in low energy range photons

Pair production is the predominant method of interaction for high energy photons. As Figure #3 (a) indicates, if the energy of a gamma photon is high enough (it must be at least 1.02 Mev), the photon can interact in the strong electromagnetic field near the nucleus. In this interaction, the gamma disappears, and the energy is actually converted into mass. Two particles are formed -- an electron and a positron. (A positron is a particle with the same mass as an electron, but with a single positive charge.) The incoming gamma must have at least 1.02 Mev energy because the mass of an electron and a positron is equvalent to 1.02 Mev. If the gamma has an energy greater than 1.02 Mev, the extra energy will be given to the electron and the positron in the form of kinetic energy. Since both of these particles have kinetic energy (if the original gamma photon was greater than 1.02 Mev), they interact with atoms (much as beta and alpha particles do) to produce ionization. Eventually, the positron

interacts with an electron, the positron-electron pair disappears, and two 0.51 Mev photons are produced. This reaction is called an annihilation reaction and the 0.51 Mev photons are known as annihilation radiation. If the electron and the positron have excess kinetic energy when the annihilation reaction occurs, more energetic photons will be given off in the reaction. Therefore, the eventual result of the pair production reaction is that a high energy photon is broken down into lower energy photons that can undergo other types of reactions.

Compton scattering is the predominant method of interaction for mid-energy range photons. As Figure #3 (b) indicates, in Compton scattering, a medium energy gamma interacts with an orbiting electron near the nucleus, imparting some of its energy to the electron. When this occurs, the electron that absorbs the energy leaves the atom to form an ion pair, and, because it has significant kinetic energy, produces ionization the same as a beta particle does. In addition, because the energy of the original gamma photon was not all absorbed, the partially deenergized photon continues on to cause other interactions. Therefore, the eventual result of a Compton scattering reaction is that a mid-energy range photon results in the production of an ion pair, and the photon continues at a reduced energy.

The photoelectric effect is the predominant method of interaction for low energy range photons. As Figure #3 (c) indicates, in the photoelectric effect, a low energy photon strikes an electron. If the photon has the same energy as the binding energy of the electron (the energy that holds the electron in its orbit), the photon will give all its energy to the electron and disappear. The electron is knocked out of the electron shells, forming an ion pair.

Therefore, in the photoelectric effect reaction, the photon disappears and an ion pair is formed. The photoelectric effect is applied in light meters used in photography. Since visible light is composed of photons of low energy, the photons interact with orbiting electrons, causing the electrons to be knocked out of the electron shells. Those electrons eventually result in an electric current that is seen by the deflection of a needle on the light meter.

The type of photon interaction, then depends upon the energy of the incoming photon. The probability of a photon interaction is often measured by a term called the linear attenuation coefficient (μ) - the probability of photon interaction per unit path length of travel of the photon. Figure #4 shows a graph that gives the linear attenuation coefficient for gamma interaction in lead. The graph shows μ for pair production, Compton scattering, and photoelectric effect interactions. The graph also gives a total μ that combines all three types of interactions. As can be seen, the total μ takes the shape of the photoelectric effect curve in low photon energy ranges, the Compton curve in the mid-energy ranges, and the pair production curve in the high energy range areas. The linear attenuation coefficient is used in calculations involving photon shielding.

Interaction of Radiation with Matter

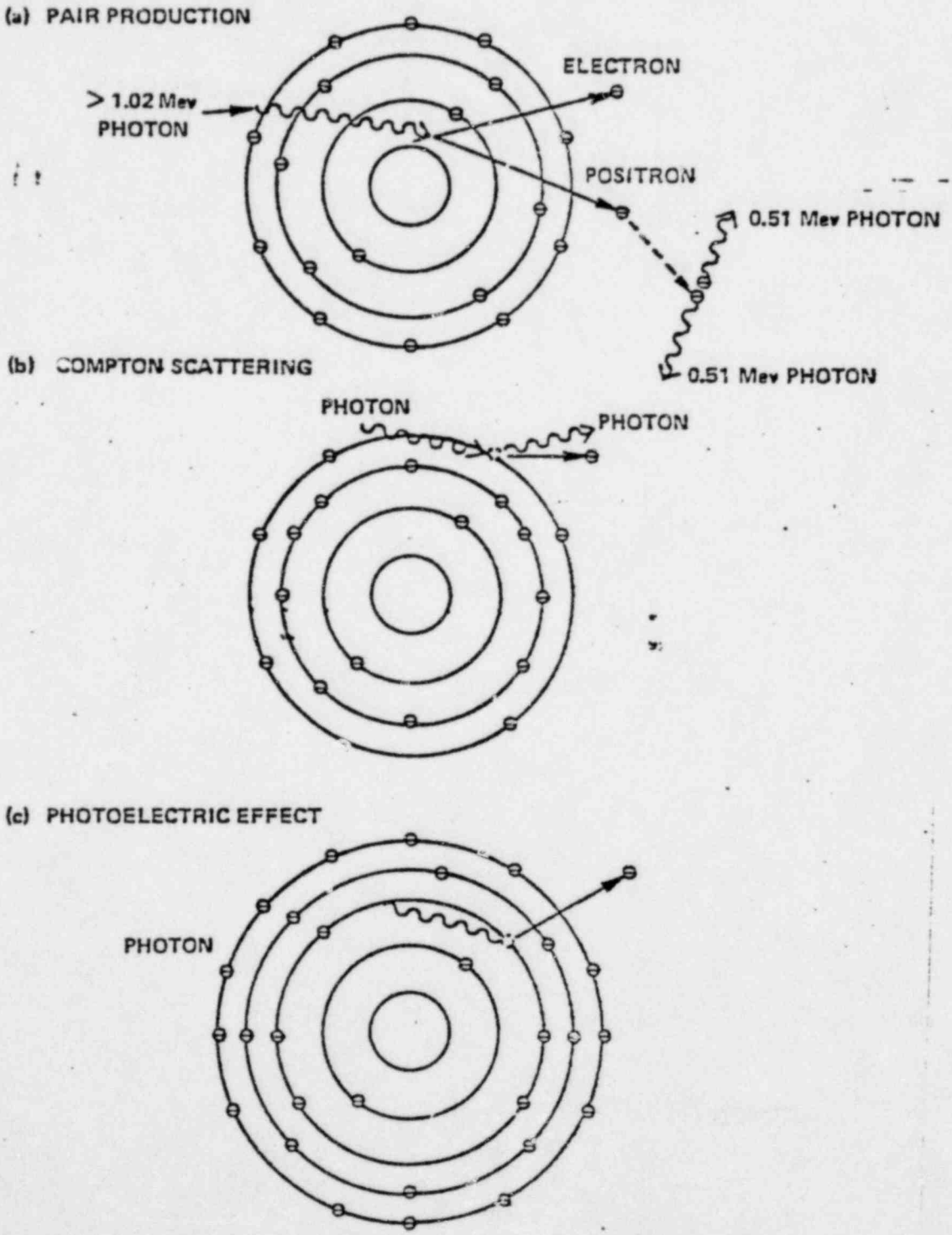

Figure #3 Photon Interactions

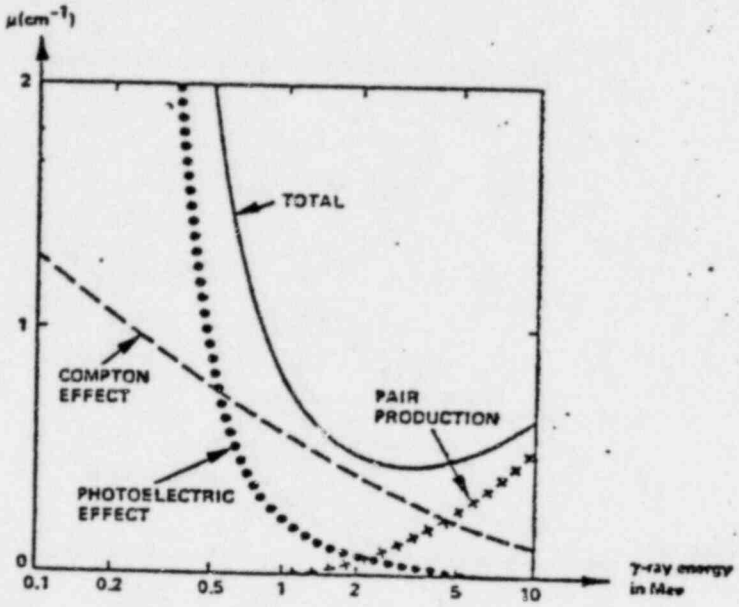

Figure #4 Linear Attenuation Coefficient in Lead

Not all types of photons can undergo all three types of photon interactions. As an example, visible light is a photon, but it does not have enough energy to cause a pair production interaction. Table #5 lists the three types of photon interaction and the types of photons that can undergo each reaction.

TABLE #5 PHOTON INTERACTIONS

TYPE	ENERGY	PHOTON
Pair Production	High-Energy	Gamma
Compton Scattering	Mid-Energy	Gamma X-ray
Photoelectric Effect	Low-Energy	Gamma X-ray Visible Light

It should be noted that a photon can cause ionization in the Compton scattering and photoelectric effect interactions. However, since a photon is not a charged particle, it cannot cause ionization by attracting or repelling electrons out of the atom. For this reason, photons do not cause as large an amount of ionization as an alpha or beta particle.

Tritium Production

1) Tertiary Fission

2) $_5B^{10} + {}_0n^1 \Rightarrow {}_5B^{11*} \Rightarrow 2\,{}_2He^{4++} + {}_1H^3$

or

$\Rightarrow {}_3Li^7 + {}_2He^{4++}$

3) $_3Li^7 + {}_0n^1 \Rightarrow {}_3Li^8 \Rightarrow {}_2He^{4++} + {}_1H^3 + {}_0n^1$

4) $_3Li^6 = {}_0n^1 \Rightarrow {}_3Li^{7*} \Rightarrow {}_2He^{4++} + {}_1H^3$

$_7N^{16}$- (γ) gamma

$_8O^{16} + {}_0n^1 \Rightarrow {}_8O^{17*} \Rightarrow {}_7N^{16} + {}_1P^1$

$_7N^{16} \Rightarrow {}_8O^{16} + {}_0\beta^{-1} + \gamma$ (6 Mev)

9. Detection of Interactions

Many different types of gas-filled detectors use ionization reactions to measure radiation intensity. These detectors can be classified into three general groups: 1) ionization chambers, 2) proportional counters, and 3) Geiger-Mueller (GM) tubes. The categories depend on how pulse size varies with increased voltage across the electrodes.

a) Six-Region Curve

The graph in figure #5 relates pulse size (ion pairs collected) on a logarithmic axis to applied voltage on a linear axis. The curve shows what happens to pulse size as the applied voltage is increased. All other detector variables (detector size, radiation type, radiation energy, etc.) are assumed to remain constant while the pulse sizes are being measured. Only the applied voltage is changed.

The curve in Figure #5 is divided into six distinct regions. For this reason, it is often referred to as the six-region curve. Each region has a name and its own distinctive characteristics. These will be described in detail in this unit. Briefly, the six regions are as follows:

1) Recombination region - applies to very low voltage; as voltage increases, the pulse size increases.
2) Ionization chamber region - pulse size does not change as the voltage increases.
3) Proportional region - pulse size increases as voltage increases.
4) Limited proportional region - pulse size again increases as voltage increases.
5) Geiger-Mueller (GM) region - pulse size increases slightly as voltage increases, but not nearly as fast as in the limited proportional region.
6) Continuous discharge region - pulse size is extremely large.

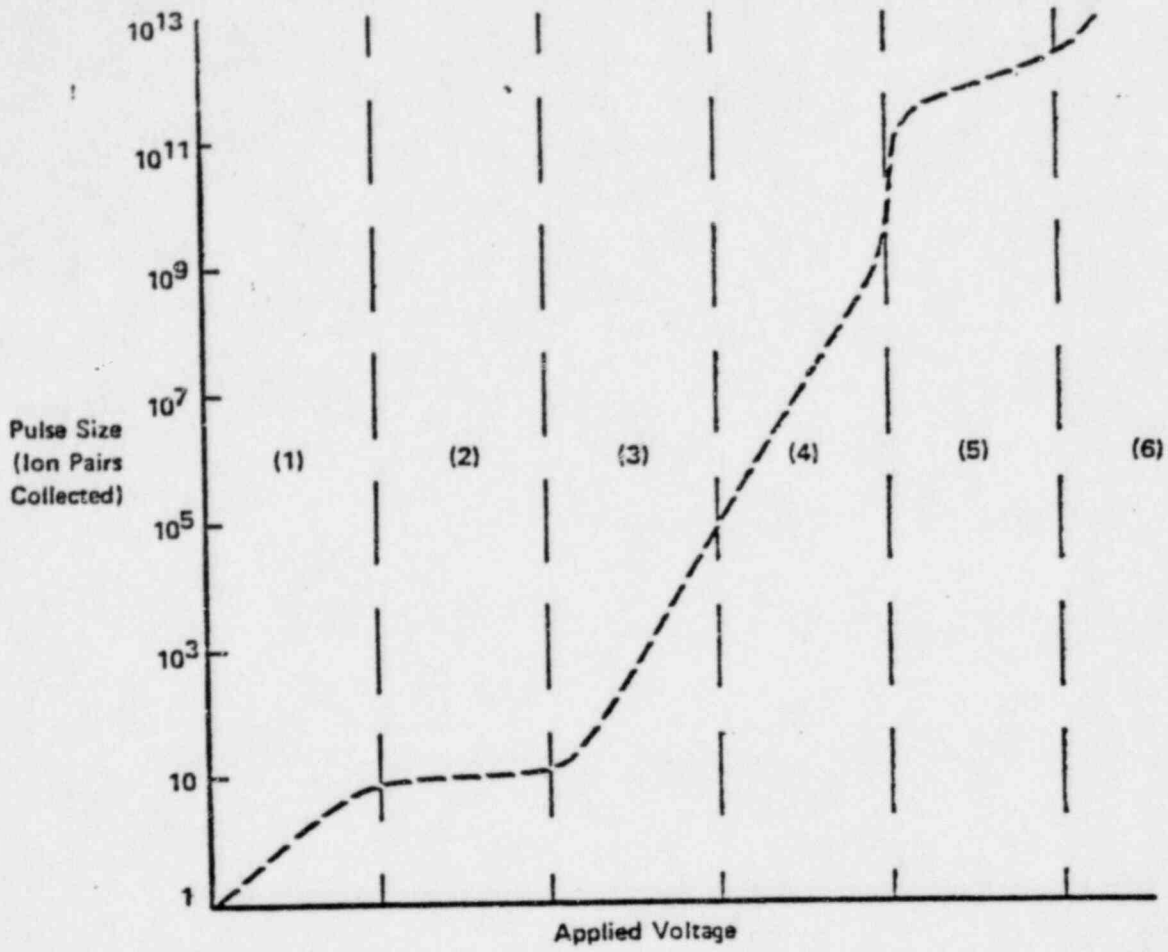

Figure 5 Effect of Applied Voltage on Pulse Size

The six-region curve is used to logically explain the characteristics and limitations of the three types of gas-filled detectors. Each type of detector will operate in the voltage range of one of the six regions of the curve. This means that the ionization chamber operates in the ionization chamber region, the proportional counter operates in the pro-portional region, and the Geiger-Mueller tube operates in the Geiger-Mueller region.

1) Recombination Region

The recombination region is the region of lowest applied voltage. Detectors are not operated in this region, because many of the ions produced in the detectors never reach the electrodes. When ion pairs are produced in the detector, the ions move toward the appropriate electrodes, but, because voltage is low, the ions do not move very fast. Because of the slow movement, some of the

positive ions have a chance to recombine with negative ions (thus the name recombination region) to form neutral atoms. This results in fewer ions being collected than were actually produced.

In the recombination region, the actual percentage of ions that recombine before reaching the electrodes varies, even when there is a constant voltage. It is for this reason that detection instruments are not operated in the recombination region.

2) Ionization Chamber Region

In the ionization chamber region, the applied voltage is greater than it is in the recombination region. This portion of the six-region curve (Figure #5) is flat, becuase there is no change in the number of ion pairs collected as the voltage increases. The reason for this is that every ion pair produced by radiation in the detector is collected on the electrodes. The voltage is high enough so that there is no recombination, but it is not high enough to cause gas amplification (ions moving toward the electrodes so fast that they cause additional ionization).

It is important to remember that in the ionization chamber region, the number of ion pairs collected by the electrodes is equal to the number of ion pairs produced by the radiation in the detector. The number of ion pairs collected does not vary with the voltage. That is one reason why some detection instruments (ionization chamber instruments) are used in the ionization chamber region. Even if the voltage varies a little, the same reading is achieved.

3) Proportional and Limited Proportional Regions

In the proportional region and the limited proportional region, the number of ion pairs collected is greater than the number of ion pairs produced in the detector by the radiation. In these two regions, there is gas amplification. A gas amplification factor is used to determine the number of ion pairs collected divided by the number of ion pairs produced by the radiation.

The gas amplification factor varies from detector to detector, and it also varies with the applied voltage across the electrodes. For example, the gas amplification factor at a certain voltage might be 5. As the voltage increases, there is more gas amplification, and the gas amplification factor might go up to 10 or 100.

The group of radiation detection instruments called proportional counters can be operated in the proportional region. Operation of these instruments is possible because the gas amplification factor at a specific voltage in the proportional region is the same for any type of radiation or energy of radiation. Thus, for a given voltage setting, the number of ion pairs produced by the radiation is always multiplied by the same factor. For example, if the gas amplification factor is 5, and the radiation produces 100 ion pairs, 500 ion pairs will be collected. If the radiation produces 10,000 ion pairs, 50,000 ion pairs will be collected. This is not the

case in the limited proportional region, so detectors are not operated in that region. The gas amplification factor is not constant for a given voltage setting in the limited proportional region.

As long as the voltage remains constant, the number of ion pairs collected in the proportional region is proportional to the number of ion pairs originally produced in the detector by radiation. This means that operation of instruments in the proportional region requires a very stable voltage supply. Many radiation detection instruments are operated in this region, because the effect of gas amplification makes the instrument sensitive to low levels of radiation.

4) Geiger-Mueller (GM) Region

In the Geiger-Mueller (GM) region, gas amplification is increased to the point where any single ionizing event will produce so many secondaryions that a very large pulse is produced. This means that a single beta would produce a few ion pairs. These ion pairs would produce more ion pairs, until literally millions of ion pairs would be produced. This effect is called avalanching. It is the result of the high voltage potential across the positive and negative electrodes.

When ionization occurs, the negatively charged ions (free electrons), which are much smaller that the positively charge ions, move quickly to the positive electrode. The positively charge ions, which are larger, move much more slowly. In fact, they tend to form a cloud of ions that moves gradually to the negative chamber well.

The cloud of positively charged ions effectively forms a second "positive electrode," which actually divides the large voltage potential into two smaller voltage potentials - one between the highly positive central electrode and the positively charge cloud and another between the positively charged cloud and the negatively charged walls. Since these two smaller voltage differentials take the place of the one large voltage differential, two small sub-detectors are, in effect, produced. The voltage potential in either of these sub-detectors is well below the applied voltage of the Geiger-Mueller region, so the avalanching stops.

When avalanching occurs, it is so great that the pulse size does not depend on the number of ion pairs produced by the radiation entering the detector. The pulse size is the same, no matter what type or energy of radiation caused the ionization. For example, a small beta particle would produce a much smaller initial effect than a large alpha, but the avalanche would become so large that it would be impossible to tell what started it. Therefore, in the Geiger-Mueller region, it is possible to tell that radiation is present, but, from just the pulse size, it is not possible to determine the type of radiation. In the GM region, the number of ion pairs collected is always the same, no matter how many ion pairs were originally produced by the radiation.

If a second particle were to enter the detector during the avalanching period, it would not produce a pulse large enough to be detected. A second pulse could not be detected until the effects of the avalanche of secondary ions had been cleared out. The time during which the second pulse could not be detected is called the dead time, and is equal to approximately 10^{-6} seconds. After the original pulse dies out another full-size pulse can be produced. The time before this full-sized pulse can be produced is called the resolving time, and is about 10^{-4} seconds.

The dead time and the resolving time are really dependent on the time it takes for the positively charged cloud of ions to move toward the chamber walls. As has been mentioned, after the avalanching occurs, there are two smaller voltage potentials present, like two sub-detectors, both operating well below the GM region. This means that any other particle of radiation interacting in either of the sub-detectors will be affected by a much lower voltage, and the number of secondary ion pairs produced will be very small in comparison with the millions of ion pairs already produced. Thus, the new pulse would go undetected, and this would be the dead time.

As the positively charged cloud moves closer to the chamber walls, one larger voltage potential and one smaller voltage potential sub-detector are present. The larger voltage potential can cause enough gas amplification to produce a new pulse. However, the larger voltage is not yet as large as it should be, so the new pulse is not full-sized, and it will not be detected by the outside electronics.

When the positively charge cloud reaches the chamber walls, there is only one large voltage potential, and the detector is once again operating in the Geiger-Mueller region. Now a particle of radiation could cause a new avalanche of ions. Again, the time before a full-sized pulse could be produces is the resolving time. Figure #6 represents resolving time and dead time in the Geiger-Mueller region.

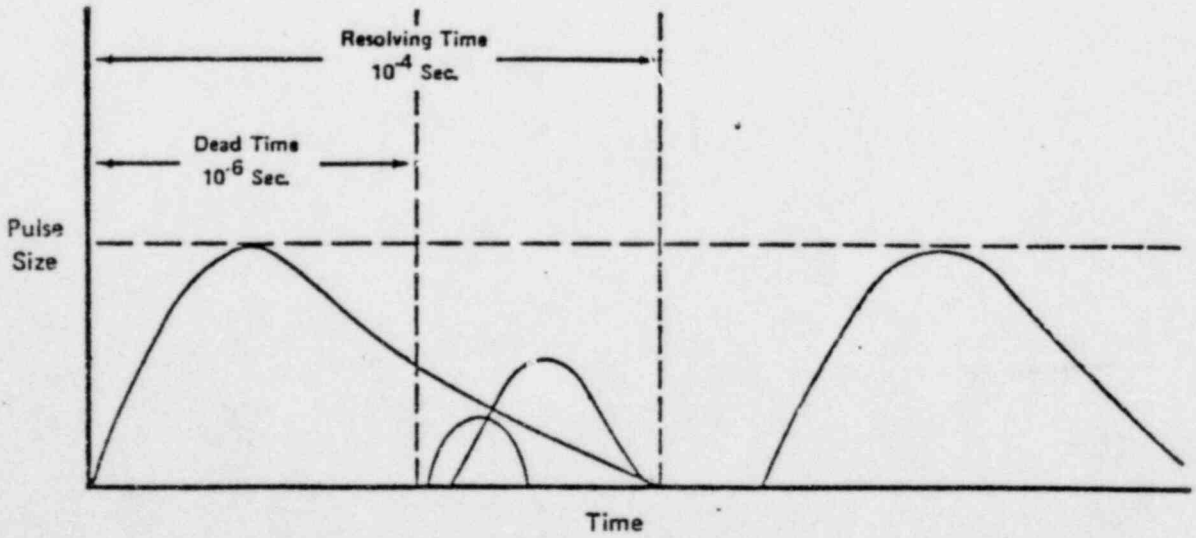

FIGURE #6 RESOLVING TIME AND DEAD TIME

Geiger-Mueller tubes are the detection instruments used in the Geiger-Mueller region. Most of these detectors use argon gas in the chamber, because argon gas is easily ionized. However, there is a problem with argon gas. When the positive argon ion is collected on the electrode, it emits photons in the form of ultraviolet light. The photons can undergo a photoelectric effect interaction with the walls of the chamber, producing more electrons and starting the avalanche all over again.

To stop the continual avalanche, another gas, called a quenching gas, is mixed with the argon. The quenching gas used varies from detector to detector, but it is u ually a halogen gas such as bromine or chlorine or some type of alcohol.

Ethyl alcohol is sometimes used as a quenching gas. As the positive argon ions move toward the negative electrode, they transfer their charge to the alcohol molecules so that, effectively, only the alcohol molecules reach the electrode. The alcohol molecules do not produce untraviolet light, and no new avalanching begins. The alcohol molecules are neutralized at the electrode, and the detector is ready to detect and count a new ion pair produced by radiation.

A GM detector that uses alcohol as a quenching gas has a definite life based on the number of ion pairs it detects. When the alcohol molecules are neutralized, they break up and disappear, so the alcohol is gradually used up. Once the alcohol is depleted, the detector is useless.

GM tubes that use halogen gases (such as bromine and chlorine) as the quenching gas have an infinite life as far as quenching is concerned. These gases also break up when they are neutralized, but they later recombine to form the original molecules. Thus, they can be used indefinitely.

5) Continuous Discharge Region

The last region in the six-region curve is the continuous discharge region. In this region, the voltage across the electrodes is extremely high, and there is continuous electric arcing across the electrodes. In other words, there is a constant pulse that is not caused by radiation entering the detector, but is due to the continuous arc across the electrodes. A detector should never be operated in this region. If it is, the detector could be damaged.

b) Detector Characteristics

In this unit, we have mentioned three different types of gas-filled detectors - the ionization chamber, the proportional counter, and the Geiger-Mueller tube. In this section, we will discuss and compare the specific characteristics of these detectors. The following characteristics will be evaluated:

- Sensitivity to low levels of radiation
- Ability to differentiate between different types and energies of radiation
- Need to have an exact constant voltage
- Use of the detector in areas of high radiation

- Use of the detector for measuring dose rates

For purpose comparison, we will assume that the three detector types are exactly the same size. The Geiger-Mueller tube is the most sensitive to low levels of radiation, because it has the largest pulse size. (Any radiation will produce an avalanche of ion pairs.) The next most sensitive is the proportional counter, because some gas amplification is taking place. The least sensitive is the ionization chamber, where there is no gas amplification. In the ionization chamber, the pulse size (the number of ion pairs collected) is always equal to the number of ion pairs produced by the radiation.

The ionization chamber and the proportional counter can discriminate between different types and energies of radiation, but the Geiger-Mueller tube cannot. In both the ionization chamber and the proportional counter, the pulse size is different for alpha and beta particles, and it is also different for different energies of radiation. With the GM tube, there is no difference in pulse size for alphas and betas or for different energies of radiation. The ability to differentiate between different types of radiation for all the regions is shown in Figure #7. Generally the ionization chamber and proportional regions could be used for discriminating different types of radiation. This is especially true for laboratory instruments. Survey instruments used in the plant discriminate for type of radiation, but, because of design considerations, discrimination is usually performed using an external shield on the detector.

Of the three detector types, only the proportional counter requires an exact constant voltage. In the ionization chamber, the voltage can vary somewhat without affecting the pulse size, and the same is true for the GM tube. The voltage can vary a little with no significant difference in the pulse size. With proportional counter, however, a small change in voltage can mean a large change in the pulse size, so it is necessary to have a well regulated voltage supply.

Ionization chambers and proportional counters can be used in high radiation areas and for dose rate measurements, but Geiger-Mueller tubes normally cannot. The GM tube will not detect every pulse of radiation, because of the resolving time needed to clear away the avalanche of ion pairs. This means that the reading obtained could be much lower than what is actually present or the dose rate to which a person could be exposed. Resolving time is not a problem with ionization chambers and proportional detectors, because there is no avalanching. Some GM detectors have been designed with sophisticated external electronics suitable for high radiation levels and dose rate measurements, but the ionization chamber is generally the best type of instrument for these measurements.

Figure 7 is a review of the six-region curve, with all of the regions labeled. The ionization chamber region, the proportional region, and the Geiger-Mueller region are the most important, because they are the regions in which detectors are operated.

Remember, in the ionization chamber region, the number of ion pairs collected in exactly equal to the number of ion pairs produced by the radiation. In the proportional region, the number of ion pairs collected is proportional to the number of ion pairs produced by the radiation.

At a given voltage, this proportionality is the same for all types and pairs collected is the same, no matter how many ion pairs are produced by radiation, because of the avalanching effect.

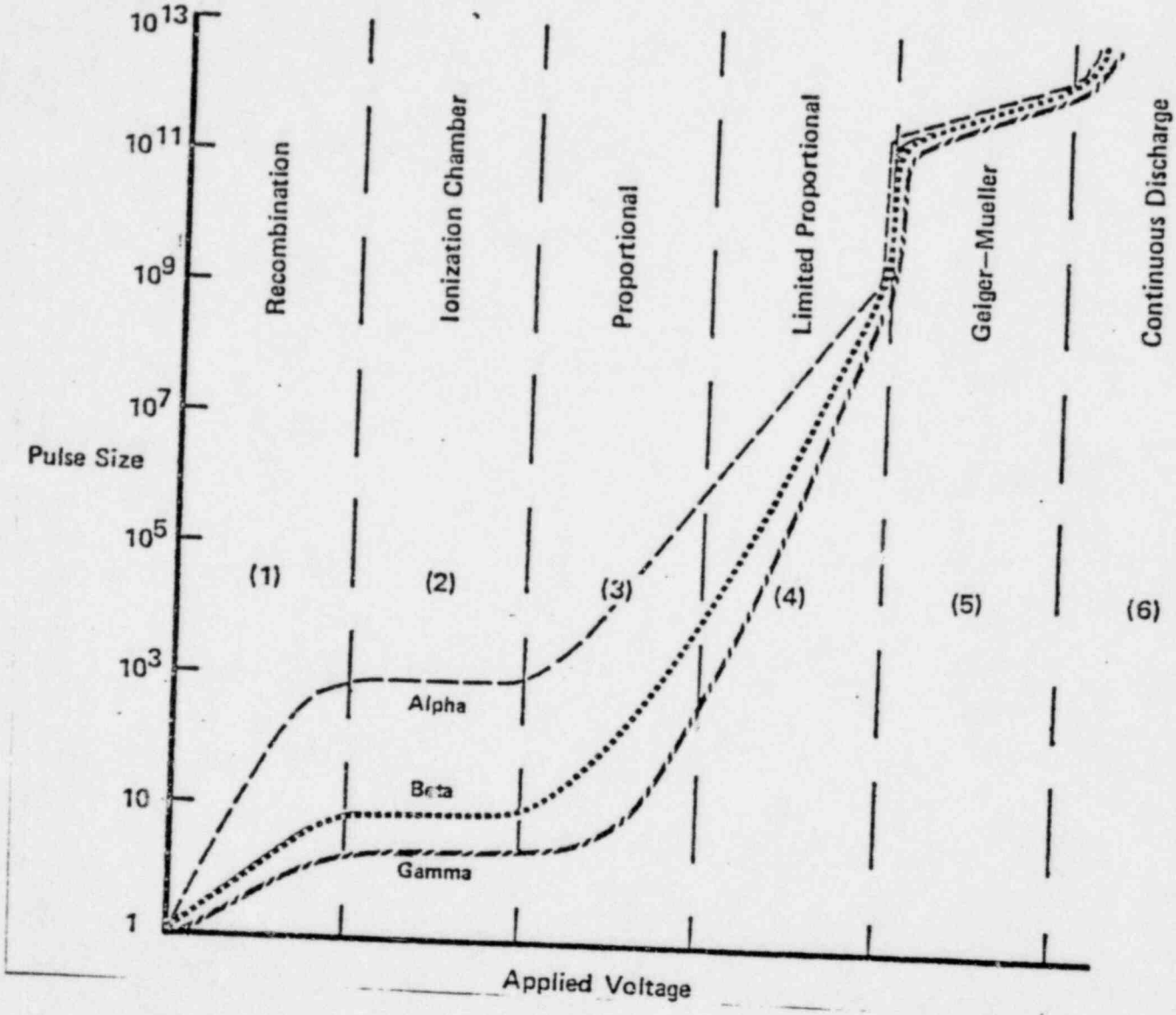

FIGURE #7 REGIONS OF THE SIX-REGION CURVE

c) Other types of radiation detection and measurement instruments.

- Scintillation detectors
- Semicounductors (mentioned, not discussed)
- Neutron detectors (discussed under specific instruments)
- Film badges
- Direct reading dosimeters
- Thermoluminescent dosimeters (TLD's)

1) <u>Scintillation Detectors</u>

All scintillation detectors work on the principle that when radiation strikes a certain type of material, light is produced. This light can be measured to determine the amount and energy of the

original radiation. The material that emits the light is called scintillation material.

Different types of scintillation material are used to detect different types of radiation. For example, a thin layer of zinc sulfide is generally used to detect alpha radiation; an anthrazine crystal is used for betas; and a sodium iodide thallium-activated crystal detects gammas. The basic functioning of the detector is the same no matter what type of scintillation material is used.

Gamma photons interact with the crystal in several methods to produce energetic electrons. The electrons ionize some of the atoms in the crystal. When molecules of NaI are ionized, the electron ejected is not energetic enough to be a "free electron." The exciton, as it is called, leaves its original orbiting poistion, but does not leave the atom itself. The energy of the exciton is eventually imparted to the activating material (thallium in the case of a NaI (TI) crystal), raising certain atoms of the material to an excited state. These excited atoms then radiate this energy in the form of light. This entire interaction, from the time a gamma photon enters the crystal until the light is emitted, takes place in a fraction of a microsecond. The crystal is usually surrounded with a diffuse reflection material to improve the light-transmitting qualities of the crystal.

Crystals in the detector are canned in metal, usually aluminum, except for the end which is to be attached to the photomultiplier tube. This end is enclosed by a glass or quartz window, which will transmit the light produced in the crystal with as little distortion as possible. The crystal must be canned for two reasons:

- External light must be prevented from entering the crystal.
- Moisture must be kept out, because it will destroy the crystal.

Figure #8 is a drawing of a gamma scintillation detector. Like the other radiation detectors we have discussed, it has three basic components - the detector, an amplifier, and a measuring device. The detector component consists of the scintillation material (in this case, a sodium iodide thallium - activated crystal) and a photomultiplier tube with positively charged dynodes in it.

At one end of the photomultiplier tube is a photocathode, and at the other end is an anode. The circuit is connected between the photocathode and the anode. If there is a flow of electrons between these two electrodes, there will be a current flow that can be measured on the measuring device.

When the gamma ray interacts with the scintillation material, visible light is given off. This visible light interacts with the photocathode, and electrons are emitted. These are the first two steps in the scintillation detection process. In the third step, the electrons are multiplied by about 10^6 by the dynodes in the photomultiplier tube.

To illustrate the third step, let's follow one electron from the time it is emitted by the photocathode. The electron is attracted to the first positively charged dynode. When it strikes the dynode, several electrons (typically four) are emitted. The first dynode is

shaped so that it directs the emitted electrons to the next dynode. The electrons will be multiplied again by the second dynode and sent on to the third dynode. The electron multiplication continues throughout all the dynodes in the photomultiplier tube. The result is a large flow of electrons striking the anode. Typically, each electron emitted from the photocathode will end up as about a million electrons striking the anode.

In the fourth step the electrons are collected by the anode. An electrical current that can be measured is the result. The current is measured by the measuring device.

The output of a scintillation detector is a pulse of electrons - a pulse that is proportional to the energy of the original radiation interacting with the scintillating material. If the original radiation has more energy coming in, there will be more light emitted, more electrons, and a larger pulse.

Scintillation detectors are extremely sensitive instruments. They are often used in plant laboratories where precise measurements are needed. They are also mounted on process systems in the plant to measure radiation levels in the liquids or gases flowing through the systems. Detectors used in this way are called process monitors and will be discussed later. (Also used to measure alpha - PAC-4S).

FIGURE 8 GAMMA SCINTILLATION DETECTOR

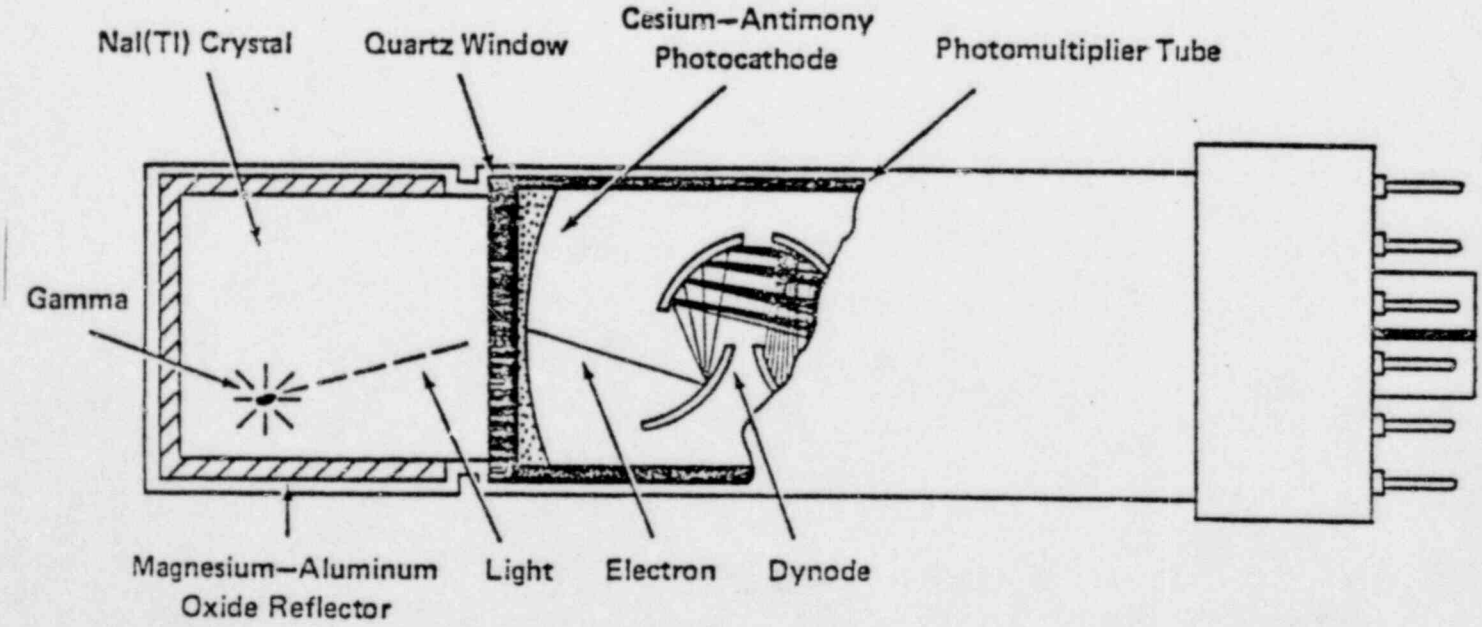

2) Semiconductor Detection Systems

The GeLi detector includes three basic components - detector, amplifier and measuring device. A power supply provides a high voltage differential across the electrodes in the detector. In addition, the system usually includes a minicomputer and other complex electronic hardware. (Figure 9)

FIGURE #9
GERMANIUM-LITHIUM DETECTOR

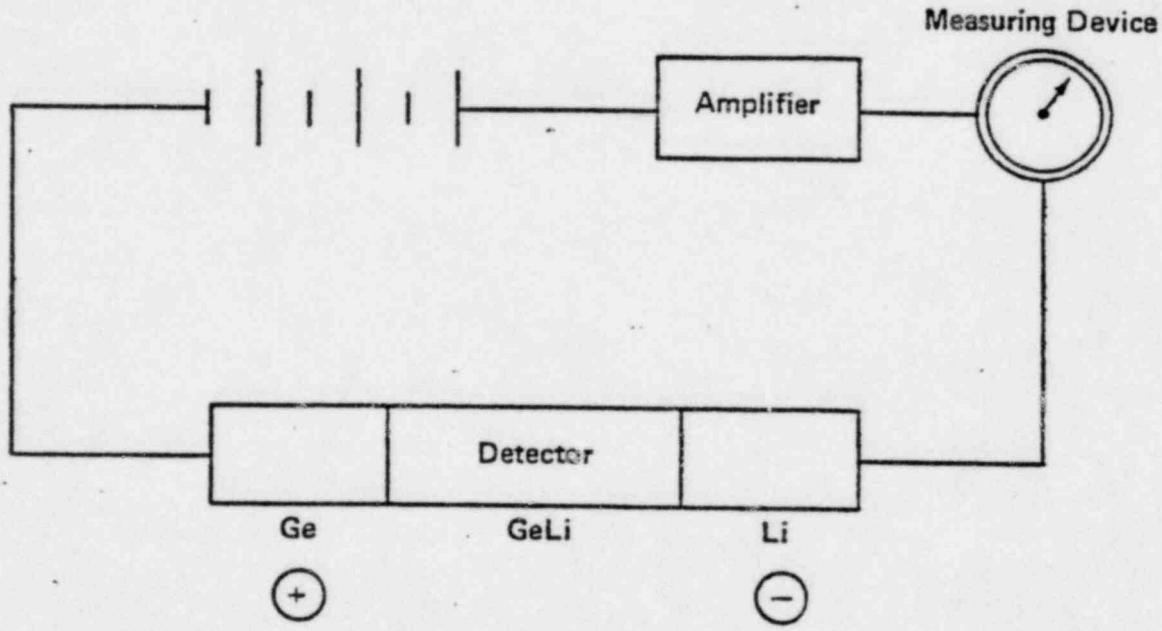

Figure 9 Germanium-Lithium Detector

NOTE: The radiation detection instruments we have discussed so far provide rate measurements such as counts per minute or mR per hour. The personnel monitoring devices are different. They measure instead the total amount of radiation that an individual is exposed to. The three general types of personnel monitors are film badges, direct reading dosimeters, and thermoluminescent dosimeters.

3) Film Badges

The film badge is designed to measure the whole-body dose from beta and gamma radiation. The badge itself is a small plastic holder that contains a photographic film packet. Inside the packet

are two pieces of photographic film, tightly wrapped in a paper envelope to prevent light from exposing the film. One piece of film is sensitive to low radiation exposure levels and the other is sensitive to high exposure levels.

When radiation interacts with the film emulsion, it produces ions that chemically activate silver molecules in the emulsion. When the film is put into a developing solution, the chemically activated silver atoms are changed into elemental silver, which turns black. The blackness, or density, of the film is a measure of the radiation interacting with the film, and, therefore it is an indication of beta and gamma dose.

Figure #10 shows how a film badge is put together. In the film badge holder is an open window that allows for the entrance of beta and gamma radiation. This means that the blackness of the film (after it has been developed) in the area behind the window is a measure of the total beta and gamma dose. Most film badges have different inserts in other parts of the holder to shield out betas and lower energy gammas. For example, one part of the holder might have a plastic insert, another an aluminum insert, and still another a lead insert. After the film is developed, the blackness will vary behind the different inserts, depending on the ability of different energy gammas to penetrate them.

Plants that use film badges generally require them to be worn in all areas of the plant. They must be worn between the waist and the neck so that they can accurately measure the whole-body dose.

Special film badges for neutron exposure are issued to anyone who goes into an area where there is a possiblity of being exposed to neutron radiation. The film used to detect fast neutrons generally contains a hydrogen emulsion, and the detection method used is proton recoil. The recoiling protons cause ionization as they move through the film emulsion. When the film is developed, there will be microscopic black tracks on it. By using a microscope and counting the number of tracks on the film, we can determine how many fast neutrons interacted with it.

Film badges should never be mishandled or opened. Tampering with a film badge could cause the loss of a personnel exposure record.

FIGURE #10 FILM BADGE

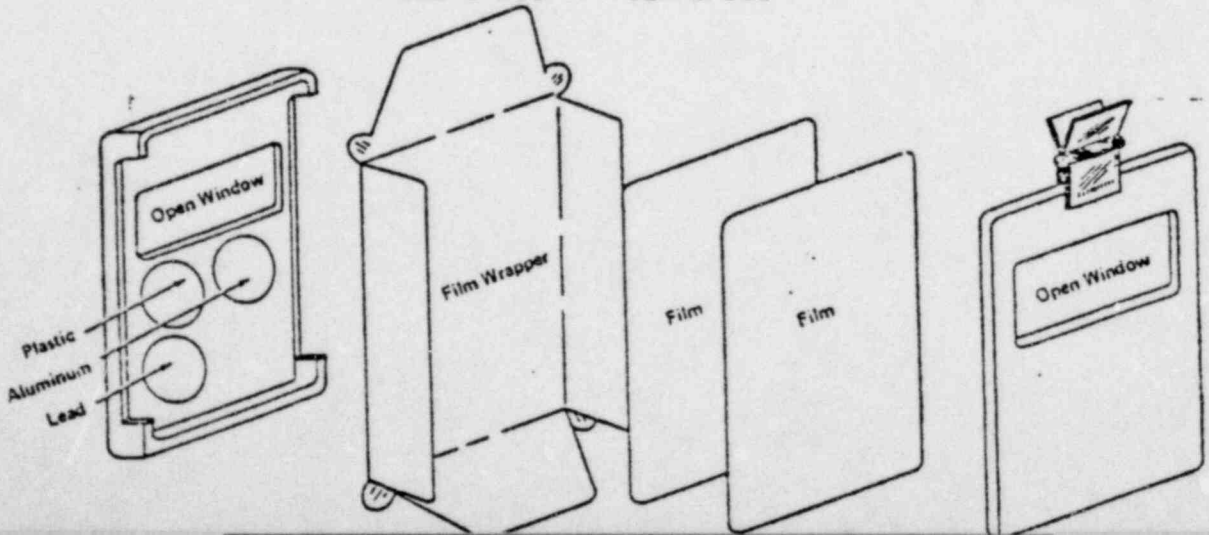

4) Direct Reading Dosimeters

The direct reading dosimeter provides an indication of the gamma radiation dose the wearer has received. By checking his dosimeter periodically, the wearer can get an up-to-the minute estimate of the total gamma dose he has received. Only gamma radiation is measured. There is no way that beta radiation can penetrate the walls of the dosimeter to cause ionization.

Figure #11 is a schematic of a direct reading dosimeter. Inside the detection chamber of the dosimeter is a stationary metal electrode with a movable quartz fiber attached to it. The dosimeter is charged so that both the electrode and the fiber are positively charged. Since both are positively charged, they repel each other, and the movable fiber moves as far away from the electrode as it can. When gamma radiation causes ionization in the detection chamber, the negative ions move to the positively charged electrode or fiber. This action reduces the positive charge and allows the fiber to move a little closer to the stationary electrode. The movement of the fiber, then, is a measure of the amount of gamma radiation absorbed by the detector.

In direct reading pocket dosimeters, a scale is placed so that the hairline on the scale is the movable fiber. As the fiber moves, the scale indicates the total amount of gamma radiation absorbed by the dosimeter. A magnifying glass inside the dosimeter enables you to read the scale and see the total gamma dose you have received. By periodically checking the total dose, you can make sure that plant guide values or federal limits on whole-body doses are not exceeded.

It is essential that you do not let your dosimeter become contaminated when you check it. This means that you must never touch the dosimeter if you are wearing contaminated gloves. Take off the contaminated outer glove and carefully hold the dosimeter with the clean inner glove while you check it.

As a general rule, anyone entering a Radiation Area or a High Radiation area should wear a direct reading dosimeter and a film badge, or a direct reading dosimeter and a TLD. Some plants require that everyone in the plant wear a direct reading dosimeter at all times.

Anyone who gets a direct reading dosimeter to wear should make sure that it is properly charged. With a proper charge, there is sufficient positive charge in the electrode and the fiber to push them apart enough so that the hairline on the scale reads below the value specified in the plant procedures. (Some plants require that the hairline be set at zero; others accept any value below a certain number, such as 10 mR.)

If a dosimeter is not properly charged, a charger must be used to charge it before it can be worn. The dosimeter is pushed into the charger, and the charger control is turned until the dosimeter is

zeroed. The dosimeter must be checked again after it is taken out of the charger. Sometimes the hairline shifts when the dosimeter is removed from the charger, and the dosimeter will have to be readjusted so that the hairline will end up at or near zero.

Since the direct reading dosimeter measures the whole-body gamma radiation dose, it should be worn in the major trunk area. When you are using a dosimeter, be careful not to bang it or drop it. Rough treatment may cause the electrode to discharge completely, sending the hairline all the way upscale.

At the end of the day, everyone should read his dosimeter and record the reading on an exposure record chart. These daily dosimeter readings can serve as a backup in case a film badge or TLD is lost.

5) Thermoluminescent Dosimeters

Many plants use thermoluminescent dosimeters (TLD's) instead of film badges for beta and gamma whole-body dose measurements. From the outside, a TLD may look exactly like a film badge holder, or it may be smaller than a film badge holder. Inside the TLD is a very small quantity of crystalline material called a detector chip that is used to measure beta and gamma exposure. A typical detector chip is approximately 1/8 inch across and 1/32 inch thick.

To understand how a detector chip measures radiation, we first need to go through a short review of electron energy levels. As we know, electrons in a solid material prefer to be in their ground energy state. This is especially true for a crystalline material. If radiation imparts enough energy to one of these electrons, the electron will jump up to a higher, unstable energy level. However, since the electron prefers to be in the ground state, it will drop and emit the extra energy in the form of heat, x-rays, or light.

In TLD material, there is an in-between state called a metastable state, which acts as an electron trap. As show in Figure 12, when radiation strikes the ground state electron, the electron jumps up and is trapped in the metastable state. It remains there until it gets enough energy to move it up to the unstable state. This energy is supplied when the TLD chip is heated to a high enough temperature. Then the electron will drop back down to the ground state, and, because the TLD chip is a luminescent material, it will release its extra energy in the form of light. The total quantity of light emitted by electrons returning to the ground state is proportional to the number of electrons that were trapped in the metastable state. The number of electrons trapped in the metastable state is proportional to the amount of beta and gamma radiation that interacted with the material. This means that the amount of light emitted when the TLD is heated is proportional to the total amount of beta and gamma radiation interacting with the material.

As shown in Figure #13, the TLD reader consists of a heater and a photomultiplier tube like the ones used in scintillation detectors. When the TLD chip is heated, light from the chip is directed into the photomultiplier tube. In the photomultiplier tube, electrons are produced in the photocathode, multiplied across the dynodes, and finally collected on the anode. This then produces a pulse in the circuit that is proportional to the total amount of beta

A. Dosimeter

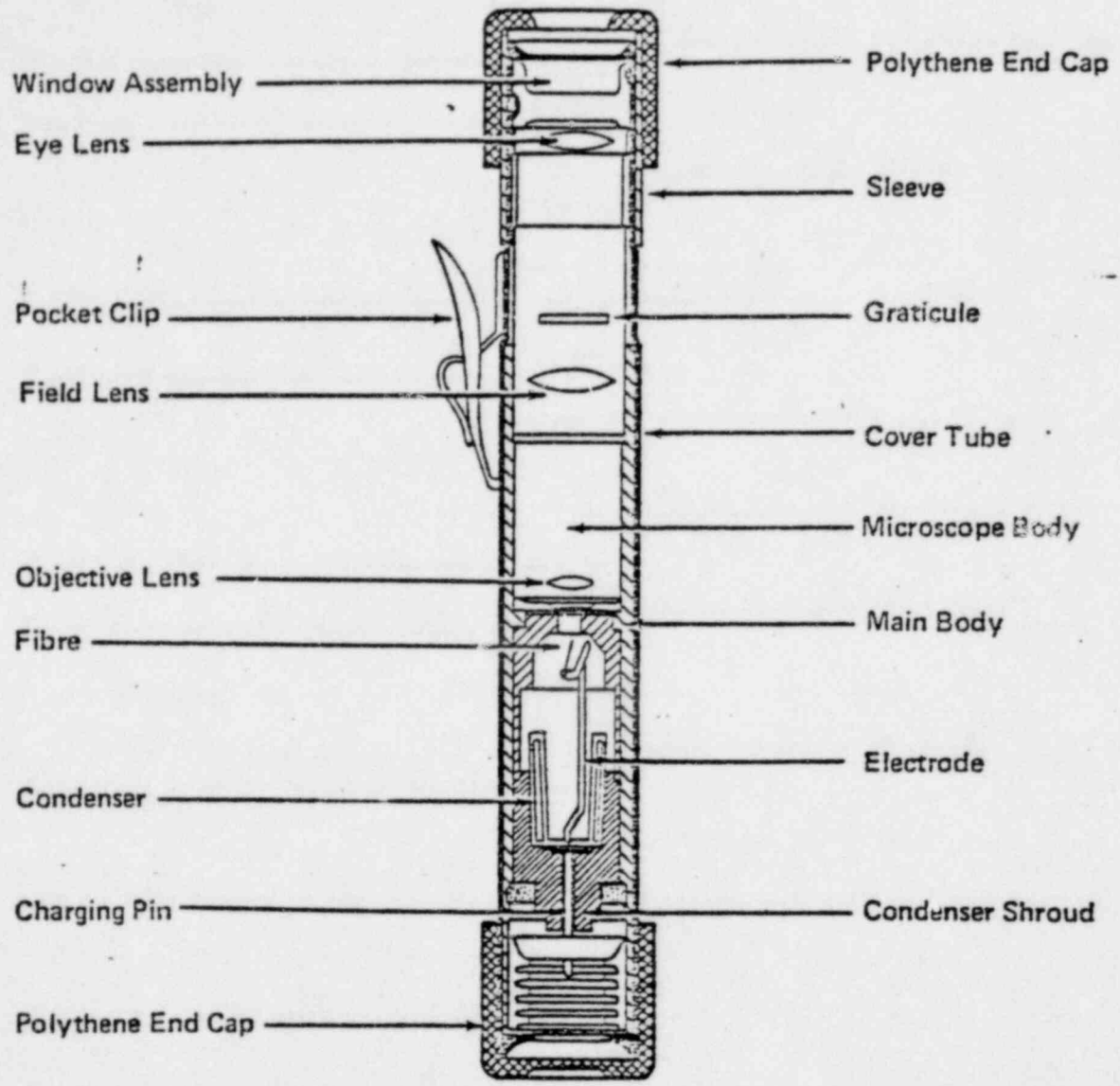

Some Different Scales For Dosimeters

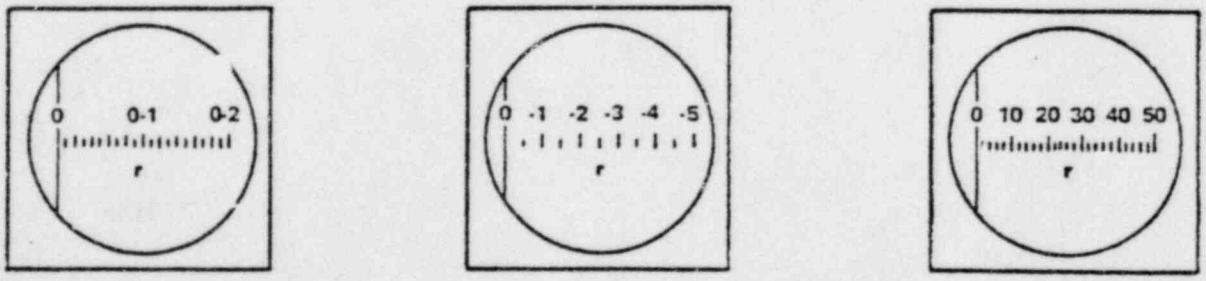

B C D

Figure #11 Direct Reading Dosimeter

and gamma radiation absorbed by the TLD material.

There are several reasons for using TLD's instead of film badges. On reason is size - TLD chips are so small that they can be taped to the fingers to measure exposure to the extremities without interfering with work. A second reason is sensitivity. The TLD is generally more sensitive than a film badge, more accurate in the low mR range, and able to provide a better overall indication of the total beta/gamma dose received. A third reason is that the TLD chip can be reused after it is read.

As has been mentioned, the film badge, the direct reading dosimeter, and the TLD are normally worn in the major body region to give the best indication of whole-body dose. There are times, however, when these devices might be worn on other parts of the body. For example, a TLD might be moved to an arm or a leg if these portions of the body might receive more radiation than the trunk area. An additional device such as a finger ring might also be used to measure an extremity dose. A finger ring contains either a piece of film or a TLD chip to measure absorbed dose from beta and gamma radiation. Special requirements are normally specified on the Radiation Work Permit for a particular job.

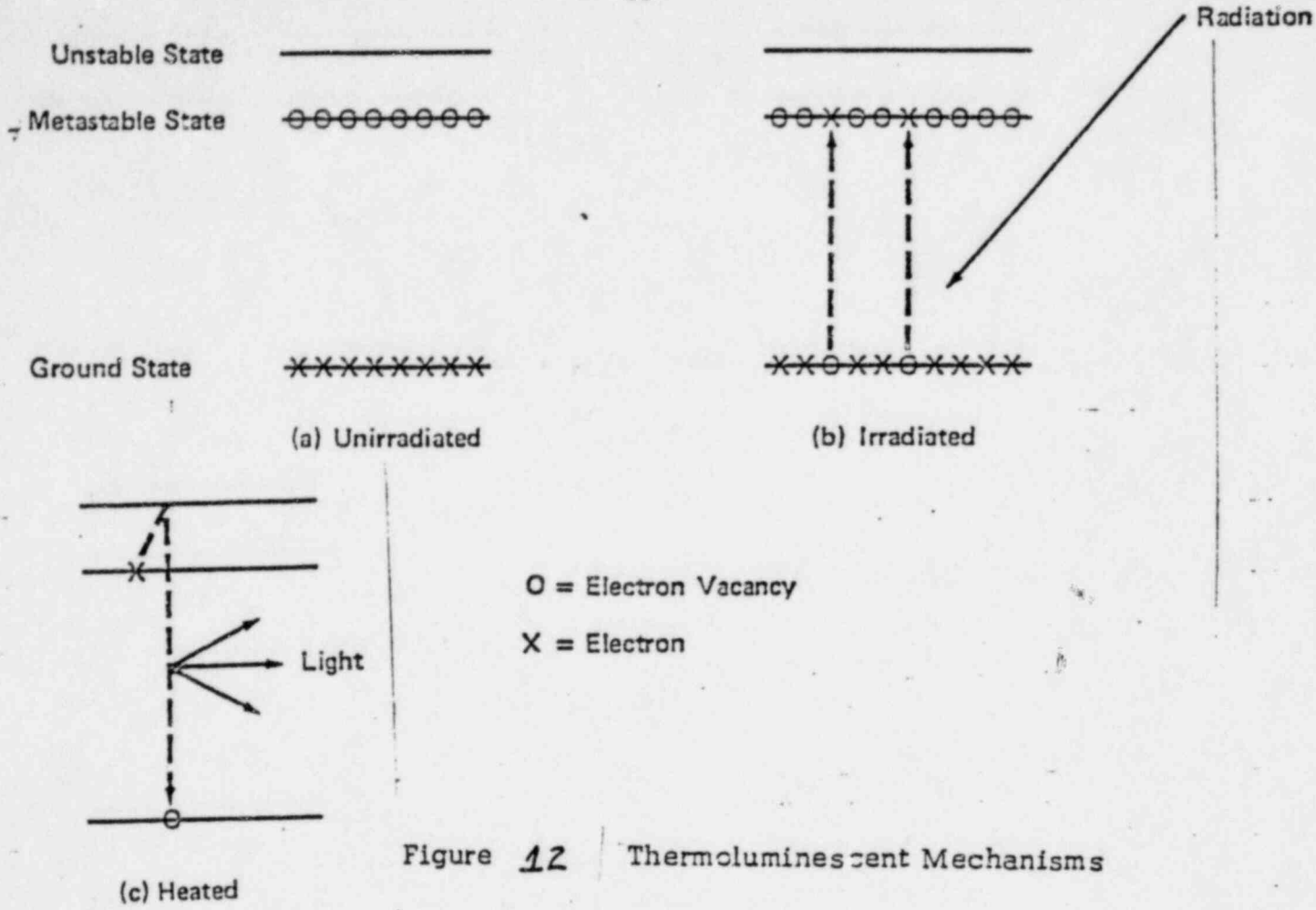

Figure 12 Thermoluminescent Mechanisms

Figure 13 Thermoluminescent Dosimeter

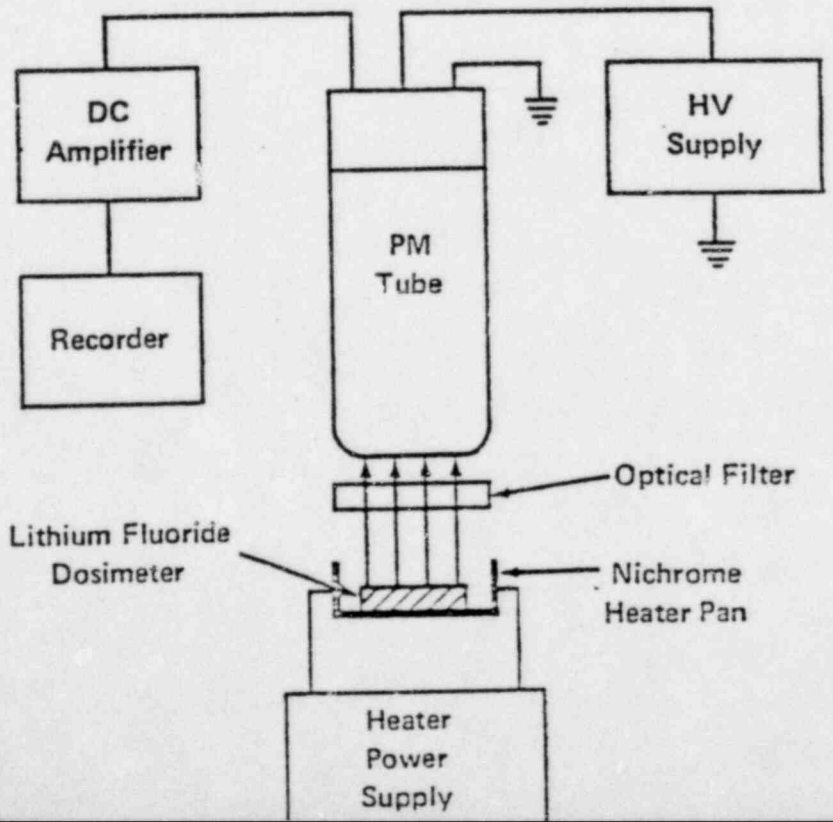

(A) Normal Discriminator-If counting above the line, only alpha pulses are counted. If below, only beta pulses.

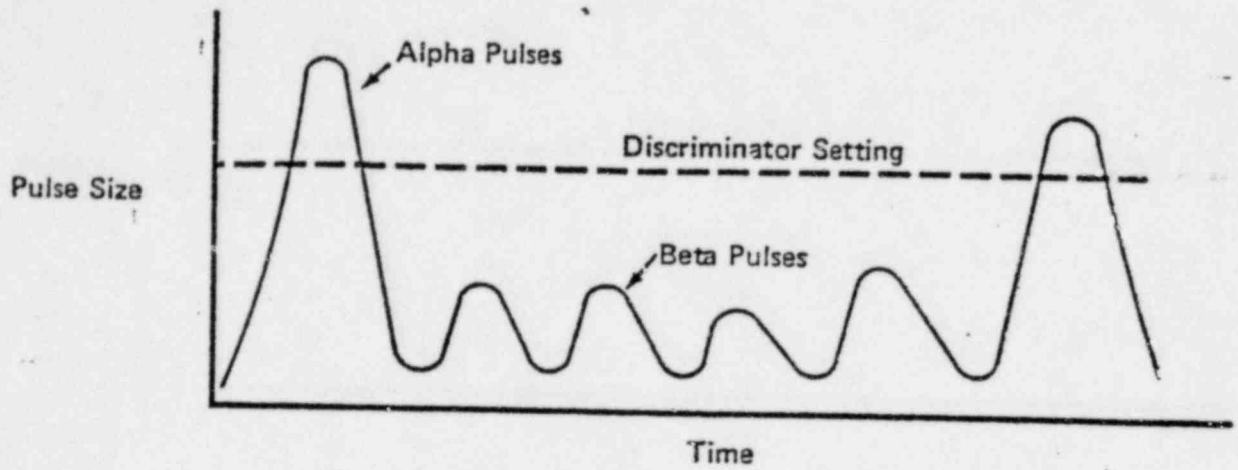

(B) Window Discriminator-Counting pulses in the window or channel.

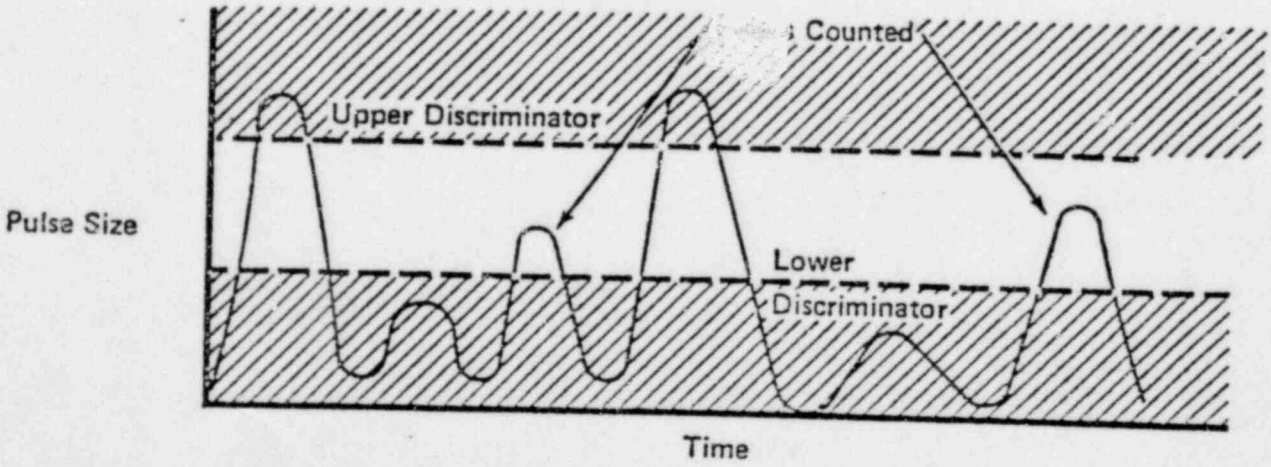

Figure 14 Electronic Discrimination

10. Specific Instruments for radiation detection:

a) RO-2
b) RM-14
c) E-520
d) PNR-4
e) PNC-4
f) Teletector
g) Hand Probe - HP 210
h) Speaker
i) PAC-4S

NOTE: Descriptions follow this page, after studying this material go to the Health Physics Lab and look at the instruments. Anything you do not understand ask the HP Supervisor/Foreman. If you still have a problem contact your Training Coordinator.

MODEL RO-2

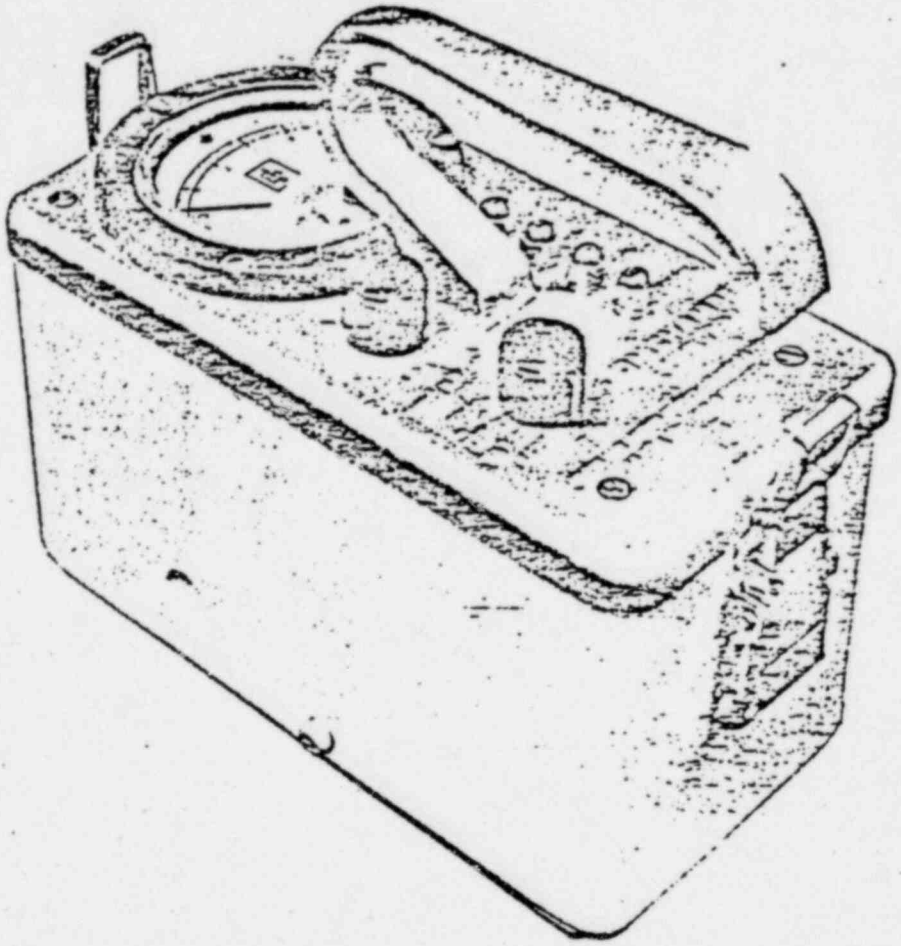

Figure 1-1. Ion Chamber, Model RO-2

similar to PIC-6

SECTION II
OPERATION

A. DESCRIPTION OF CONTROLS

1. Function Switch: Eight position rotary switch that turns the instrument OFF, checks the condition of the batteries, checks instrument ZERO, and selects the range of operation to be used.

2. ZERO Knob: Used to set the meter to zero when ZERO switch position is selected or when in an insignificant radiation field.

3. Calibration Controls: Four variable resistors, one for each range.

B. USING THE INSTRUMENT

1. Turn the function switch to BAT 1 and then to BAT 2 positions. The meter should read above the BATT cut-off line in both cases.

2. Turn the function switch to ZERO position. Check that the meter reads zero. If not, set it to zero with the ZERO knob.

3. Set the function switch to the desired range of operation. The switch position selected is the full scale reading of that range.

4. When measuring beta or low energy gamma or x-ray emissions, open the sliding beta shield on the bottom of the case and face the bottom of the instrument toward the radiation source. To open or close the shield, depress the friction release button on the left side of the case and manually move the slide or let it fall due to gravity. When the shield is open, protect the thin face against damage by puncture.

NOTES

a. The zero setting of the instrument may be checked in any radiation field by merely selecting the ZERO position.

b. When selecting that most sensitive range (5 mR/hr) switching transient noise may cause a temporary deflection of the meter. This can be avoided by first selecting 50 mR/hr, letting the needle settle, and then switching to 5 mR/hr.

c. The effective center of the ion chamber is marked by dimples at the front and sides of the instrument case.

d. Since the ion chamber is vented to atmospheric pressure, it is sensitive to changes in both air pressure and temperature. Tables 2-1 and 2-2 give correction factors to be used if the use conditions are different from the calibration conditions. If both pressure and temperature are different, multiply the meter reading by both factors.

		TEMPERATURE WHEN CALIBRATED (°F)											
		30	40	50	60	70	80	90	100	110	120	130	140
TEMPERATURE WHEN USED (°F)	30	1	.98	.96	.94	.92	.91	.89	.87	.86	.84	.83	.82
	40	1.02	1	.98	.96	.94	.93	.91	.89	.88	.86	.85	.83
	50	1.04	1.02	1	.98	.96	.94	.93	.91	.89	.88	.86	.85
	60	1.06	1.04	1.02	1	.95	.96	.95	.93	.91	.90	.88	.87
	70	1.08	1.06	1.04	1.02	1	.98	.96	.95	.93	.91	.90	.88
	80	1.10	1.08	1.06	1.04	1.02	1	.98	.96	.95	.93	.92	.90
	90	1.12	1.10	1.08	1.06	1.04	1.02	1	.98	.96	.95	.93	.92
	100	1.14	1.12	1.10	1.08	1.06	1.04	1.02	1	98	.97	.95	.93
	110	1.16	1.14	1.12	1.10	1.08	1.06	1.04	1.02	1	.98	.97	.95
	120	1.18	1.16	1.14	1.12	1.09	1.07	1.05	1.04	1.02	1	.98	.97
	130	1.20	1.18	1.16	1.13	1.11	1.09	1.07	1.05	1.04	1.02	1	.98
	140	1.22	1.20	1.18	1.15	1.13	1.11	1.09	1.07	1.05	1.03	1.02	1

MULTIPLY METER READING BY GIVEN CORRECTION FACTOR

Table 2-1. Temperature Corrections

SECTION III
THEORY OF OPERATION

A. GENERAL

Refer to Figure 3-1, a block diagram representing the basic operation of the circuit. The ion chamber has battery potential between the inside wall and the center electrode. When the air in the chamber ionizes due to radiation, a minute current flows through the chamber causing the minus input lead of the operational amplifier to go very slightly positive. This results in a negative swing of the amplifier output which is connected to the feedback elements through a divider circuit. The feedback elements are connected to the amplifier input and ion chamber and they conduct away all of the current generated in the ion chamber. The meter is also tied to the output of the amplifier and indicates in proportion to amplifier output voltage. Range changing is done by selecting different feedback elements and by selecting different points on the feedback divider.

B. FUNCTIONAL THEORY

1. ION CHAMBER

The ion chamber is located inside the case below the meter. It consists of the lower two inches of the three-inch diameter chamber assembly. The remainder of the volume contains electronic components, including the amplifier, A1. The chamber wall is 1/16 inch phenolic and the face is 1 mil aluminized mylar. Another 1 mil mylar layer is glued to the case, making total thickness of 2 mils. The active volume of air in the chamber is 208 cc.

The inside of the chamber has a conductive coating of graphite dag which is maintained at +battery voltage. The inside of the mylar face is also at the same voltage. The outside of the chamber is coated with dag and is maintained at ground potential to provide electrostatic shielding. The center electrode is coated with conductive dag and is supported on the center conductor of the guarded feedthrough at the top of the chamber. The guard ring of the guarded feedthrough is positioned on insulators between the center conductor and the positive outer ring to prevent possible leakage from the high voltage to the center electrode. The guard ring and center electrode are maintained at the same potential (ground potential) so no leakage from the guard to the electrode will occur.

The chamber is sealed except for a small hole in the top wall which vents it to the electronic section immediately behind the chamber. This section is vented to the inside of the main instrument case through a plastic hose connected

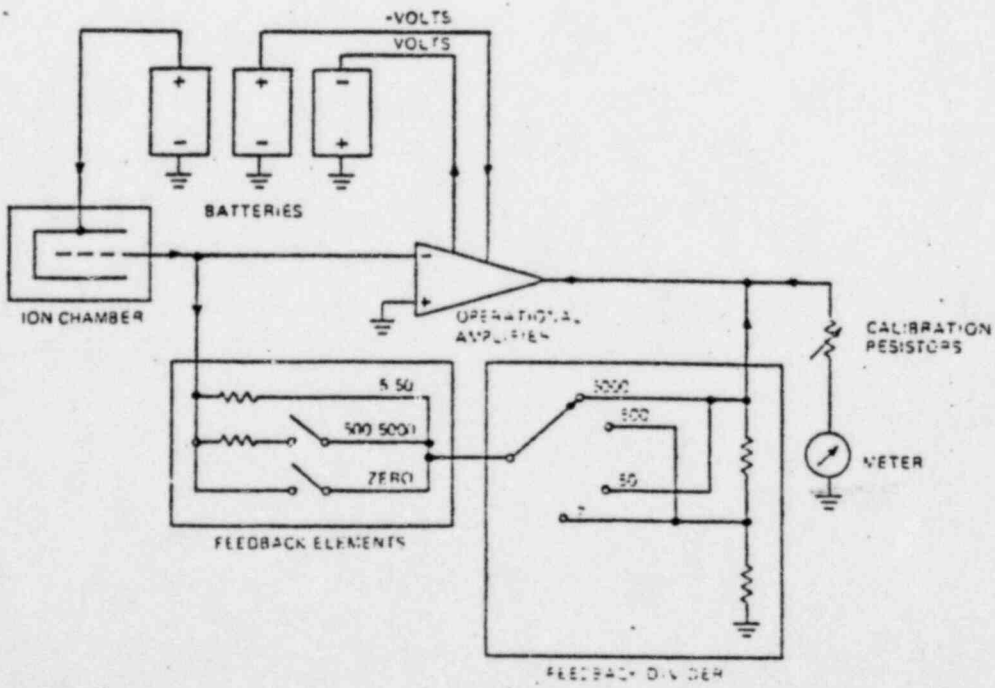

Figure 3-1. System Block Diagram

to a drying box filled with silica gel desiccant. In this way, any air drawn into the chamber (caused by atmospheric pressure changes, temperature changes, transporting RO-2 by air, etc.) must first pass over the drying desiccant. Dry air in the chamber is necessary to help prevent leakage.

An idealized air chamber the size of the one used on the Model RO-2 produces approximately 1.93×10^{-14} amps per mR/hr at standard temperature and pressure (STP is 0°C and sea level pressure of 760 mm of Hg). At 5 mR/hr it should produce 9.65×10^{-14} amps and at 5000 mR/hr it should produce 9.65×10^{-11} amps. It is seen that at full scale on the most sensitive range (5 mR/hr), less than 1/10 of a micro-microamp is produced in the chamber which makes protection against leakage current paramount. The silica gel desiccant should be changed as soon as it shows any clear or pink crystals.

The positive voltage supplied to the inside chamber wall is provided by a separate battery, BT3. This battery does not power any other circuit but the chamber and, therefore, its current drain is insignificant and its life in indefinitely long (shelf life). For this reason, it is not checked by the battery checking circuits.

2. OPERATIONAL AMPLIFIER (See Figure 6-1.)

The operational amplifier, A1, is contained in a single TO-5 size transistor package located in the top of the chamber assembly. It has dual MOS FET inputs which results in a very high input impedance, on the order of 10^{15} ohms. The non-inverting input, pin 3, is connected to ground and the other input, pin 2, is connected to the ion chamber center electrode and the feedback elements. The output of the amplifier, pin 6, feeds the meter circuit and the feedback circuit.

When ion chamber current flows toward the amplifier input at pin 2, the input becomes slightly more positive which causes the output to go more negative. This negative output of the amplifier draws a current from one of the feedback elements to exactly match the amount of current the ion chamber is contributing. If a higher ion chamber current occurs, the amplifier must produce a higher voltage across the feedback element to draw off the current. In this way, the amplifier voltage output is proportional to the chamber current which is, in turn, proportional to the rate of radiation in the chamber.

3. METER CIRCUIT

The meter is driven directly from the output of the amplifier, pin 6, through dropping resistor R8 and one of four calibrating resistors, R9 through R12. Nominally, the meter reaches full scale on all ranges at approximately the same voltage output from the amplifier. The four calibrating resistors allow for manufacturing tolerances in various components and provide for calibration at various elevations and temperatures. Function switch S1, section C, determines which calibration resistor is in the circuit. Capacitor C4 sets the time constant for the meter circuit.

4. RANGE SWITCHING

The range that the Model RO-2 is operating on depends entirely on the feedback circuitry between the output of the amplifier and the amplifier input, pin 2, which is connected to the ion chamber. Table 3-1 shows the nominal current and voltage conditions of the circuit when at full scale on the four ranges (sea level, 0°C).

Feedback resistor R1 is connected to the circuit at all times. When using the 500 and 5000 mR/hr ranges, S3 closes and R2 is put into the circuit. Since R2 has 100 times less resistance than R1, the effect of R1 is negligible. When on the ZERO, BAT 1, BAT 2 or OFF positions of the range switch, S1 closes and shorts out the feedback resistors so that the feedback current cannot generate any voltage across the resistors. When this occurs, any voltage remaining on the amplifier output and showing on the meter is zero offset error. This offset can be removed with the ZERO control, R3, which re-balances the amplifier with

RANGE SETTING	ION CHAMBER CURRENT, AMPS FULL SCALE	FEEDBACK ELEMENT	VOLTAGE ON FEEDBACK ELEMENT	VOLTAGE OUT OF AMPLIFIER
5 mR/hr	9.65×10^{-14}	R1, 3×10^{12} ohm	0.29	2.9
50 mR/hr	9.65×10^{-13}	R1, 3×10^{12} ohm	2.9	2.9
500 mR/hr	9.65×10^{-12}	R2, 3×10^{10} ohm	0.29	2.9
5000 mR/hr	9.65×10^{-11}	R2, 3×10^{10} ohm	2.9	2.9

Table 3-1. Full Scale Currents and Voltages

both inputs of A1 at zero potential.

Switches S2 and S3 are glass encapsulated magnetic reed switches with a very high open circuit impedance. They are activated by a permanent magnet which moves on a swinging arm on the outside of the chamber assembly. S2, the shorting switch, is located in the right side of the chamber assembly. The magnet is over S2 when the range switch is at OFF, BAT 1, BAT 2 or ZERO. S3, the switch that places R2 in the circuit, is located in the left side of the chamber assembly. The magnet is over S3 when the range switch is at the 5000 or 500 mR hr positions. When using the 50 or 5 mR/hr positions, the magnet is over the center of the chamber and neither S2 nor S3 is pulled in. This leaves R1 as the active feedback resistor.

The second section of S1 (S1-B) selects full amplifier output voltage or one-tenth of that voltage to supply the feedback elements. Full amplifier voltage is used on the 5000, 50, BAT 1 and BAT 2 positions and one-tenth output voltage is used on the 500, 5 and ZERO positions.

MODEL RM-14

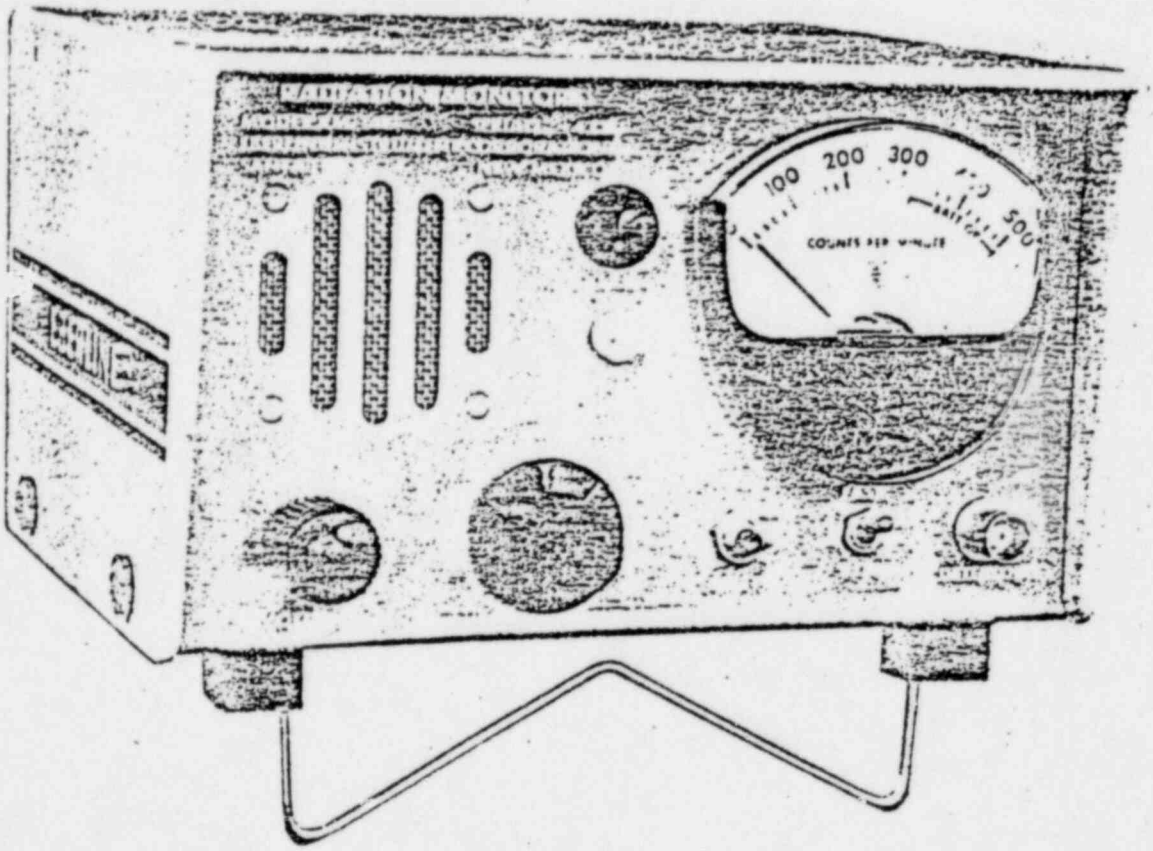

Figure 1-1. Radiation Monitor Model RM-14

SECTION II

OPERATION

A. DESCRIPTION OF CONTROLS AND CONNECTORS

1. EXTERNAL (See Figures 1-1 and 2-1)

a. Switch: Five position rotary switch that turns instrument OFF, checks BATTery condition and selects scale multipliers of X1, X10 and X100. This number must be multiplied by the meter reading to obtain the proper count rate.

b. RESPONSE: Toggle switch to set response time either FAST or SLOW for best compromise between speed and fluctuation for the particular usage.

c. RESET: Discharges integration capacitor, bringing the meter reading to zero rapidly, also releasing an alarm condition.

d. VOLUME: Varies loudness of speaker from no sound to maximum loudness.

e. DETECTOR: Connection to detector. BNC series coaxial.

f. ALARM SET: Controls point on meter scale that the alarm will actuate. Numbers 1 thru 5 correspond to bold increments on meter-scale.

g. TEST: Toggle switch inserts 3600 CPM into instrument when on, if power cord is plugged into ac line.

h. Recorder: Connection for external 50ua recorder. May be changed to 10 mv. See Section III, C, 4.

i. Scaler: Connection for external scaler. BNC series coaxial.

2. INTERNAL (See Figure 2-2)

a. Calibration Controls: One control for each range which individually calibrates that range to agree with input count rate.

b. Alarm Set Calibrate: Control to set correlation between alarm set and meter reading at alarm point.

B. PREPARATION FOR USE

1. INSPECTION

The instrument should be checked for physical damage.

2. CONNECTIONS

a. Connect proper detector to DETECTOR connector.

b. Plug AC cord into 115V, 60 Hz line. AC ON light should light.

C. USING THE INSTRUMENT

1. STARTING

Turn the switch to BATTery check position. The meter should indicate in the BATT OK area.

2. OPERATION CHECK

Place check source in a repeatable position adjacent to the detector to achieve an upscale reading. Note that the reading is sensitive to the position of the source. The reading may be recorded for future reference.

Push the RESET button and the reading should drop to zero rapidly, then climb back to source reading when RESET is released. The RESPONSE switch may be selected for the best compromise between speed of reading and meter fluctuation.

Rotate the ALARM SET counterclockwise until alarm occurs. ALARM light should light and 1000 Hz squeal will be heard on the speaker. Push the RESET button; the alarm condition should go away until reading exceeds alarm set point.

3. INTERPRETATION OF INDICATIONS

The meter reading must be multiplied by the scale switch setting to obtain the proper number. The fluctuation of the meter is normal and is caused by the random nature of radioactive decay.

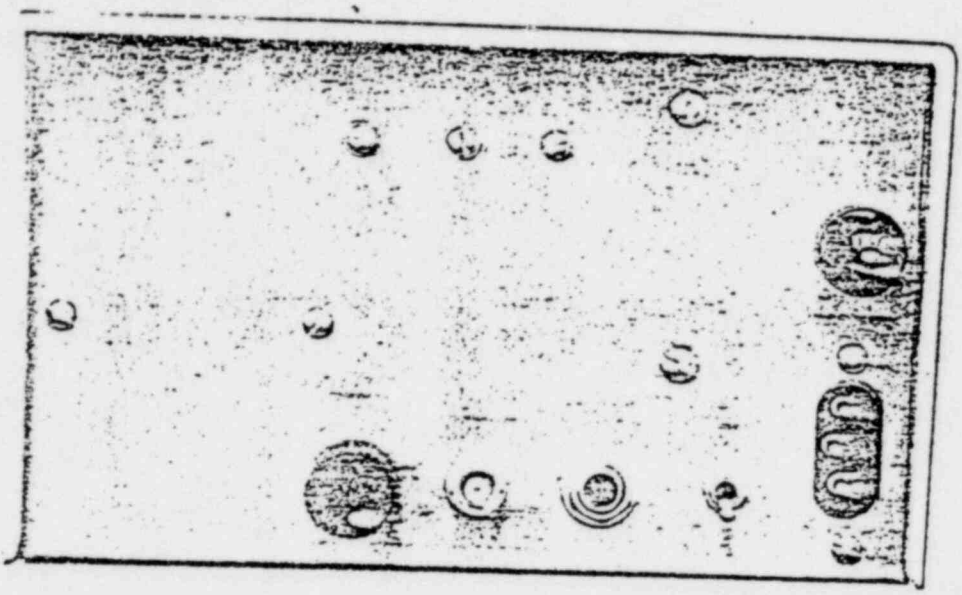

Figure 2-1. Rear View, Cover in Place

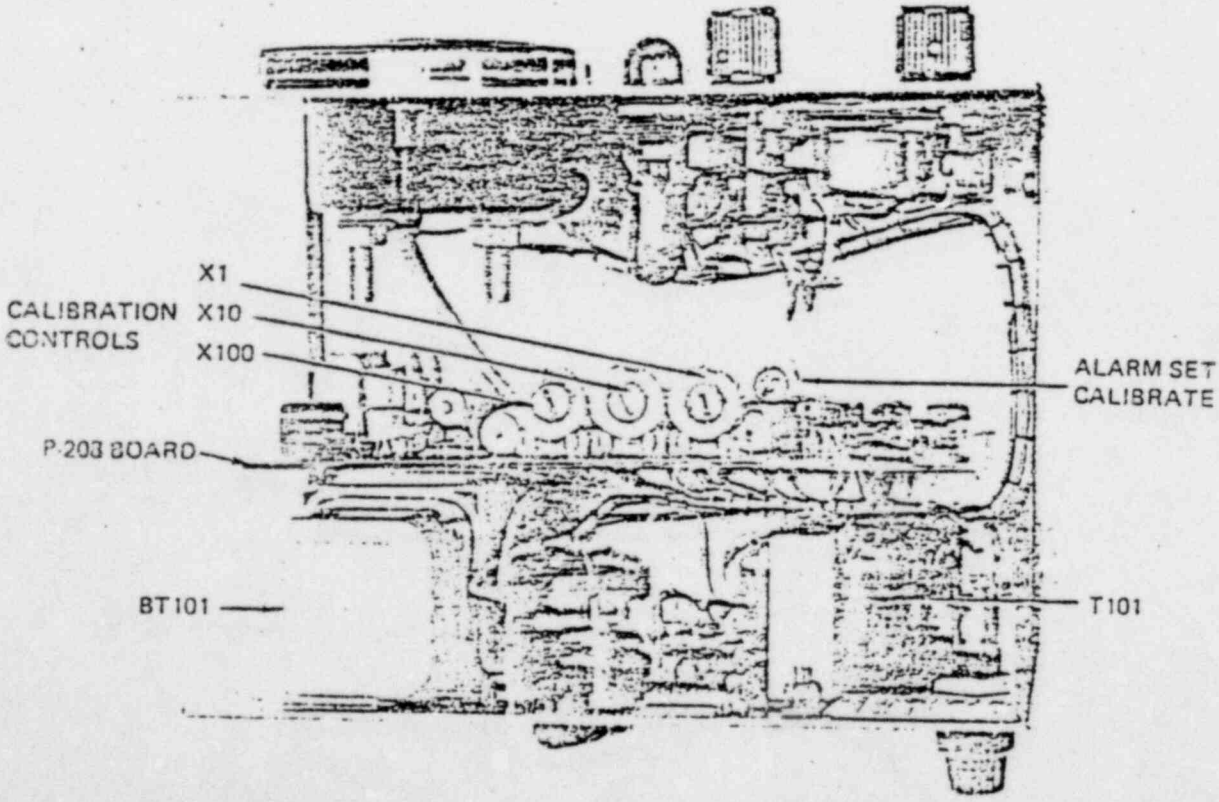

Figure 2-2. Top View, Cover Removed

SECTION III

THEORY OF OPERATION

A. GENERAL (See Figure 3-1)

The high voltage supply develops +900 volts, which is applied to the geiger tube, giving it the proper operating voltage. When radiation reacts in the geiger tube, negative pulses are generated. These pulses are coupled into the amplifier where they are amplified. They are then coupled to the trigger circuit where they are converted to standard size pulses of power. These standard pulses are applied to the meter driver which converts them to standard pulses of current, averages this current and drives the meter. Thus the meter deflection is proportional to the average rate of radiation at the geiger tube.

The voltage developed across the meter is applied to the differential alarm amplifier whose reference voltage is controlled by the alarm set control. When the meter voltage exceeds the reference voltage, the alarm amplifier sustains an alarmed condition which lights the alarm light and inserts the H.V. oscillator frequency to the speaker.

B. FUNCTIONAL THEORY (See Figures 3-1 and 6-1)

1. HIGH VOLTAGE SUPPLY

The oscillator transistor (Q1) drives T1 primary and gets its feedback from T1's red-orange winding. The voltage is stepped up by T1's secondary, rectified, filtered and through V1 is sensed by Q2, amplified, and used to control the current through Q3. The current through Q3 controls the bias level of the oscillator Q1. This tends to hold the current through V1 to a constant value, regardless of battery voltage.

2. AMPLIFIER

Q5, Q6 and Q7 amplify and invert the negative signal from the detector. The collector of Q7 is near zero until a pulse turns it on and the resulting positive pulse starts the trigger.

3. TRIGGER

Integrated circuit A1 is connected to operate as a monostable multivibrator whose pulse width is controlled by the RC time constant between its pins 7 and 3. This time constant is established by the setting of S101A (scale selection) which selects a particular R and C. The calibration controls form the R for each scale, making the pulse width continuously adjustable for calibration.

When the trigger is initiated by the pulse from Q7, the output at pin 6 goes positive and holds until the predetermined time (RC) elapses.

4. METER DRIVER

The driver Q9 is normally off so no current flows through M-1. When the trigger is on, Q9 is turned on and current flows. The amount of current is determined by the voltage on the base of Q9 and R22. The length of time that current flows is determined by the pulse width of the trigger. This (current times time) forms a certain charge which is transferred to C11 (or C11 and C12, depending on response time switch position) for each event counted. C11 discharges thru M1, yielding a certain average current dependent on the rate of input pulses. Changing the pulse width of the trigger (i.e., changing scales or calibration pot setting) changes the average current for a given input pulse rate. This allows the meter to be calibrated to read counts per minute at the detector.

The response time is controlled by the RC time constant of C11 and R23 in the FAST position, or C11 + C12 and R23 in the SLOW position.

5. SPEAKER DRIVER No. 1

Q20 and Q21 amplify the trigger pulse and drive the speaker. One event is heard on the speaker for each event counted. Q21 also drives the external scaler. Speaker loudness is controlled by R104 setting.

6. ALARM AMPLIFIER

Q10, 11, 12 and 13 form a differential amplifier with the alarm set, R103, controlling the reference side of the amplifier. The voltage across R103 is held stable by current source CR12. Alarm point is set by adjusting the reference voltage on the base of Q12. As the meter is driven up scale, the voltage on the base of Q10 increases proportionally with meter reading. When the voltage on Q10 equals, or exceeds, the voltage on Q12, Q14 will conduct, turning on Q15, lighting the alarm light and activating the No. 2 speaker amplifier. The alarm point is changed by changing the voltage on the reference side, i.e., adjusting R103. The alarm condition is locked in by the feedback loop consisting of R27 and CR7 which holds Q14 in conduction.

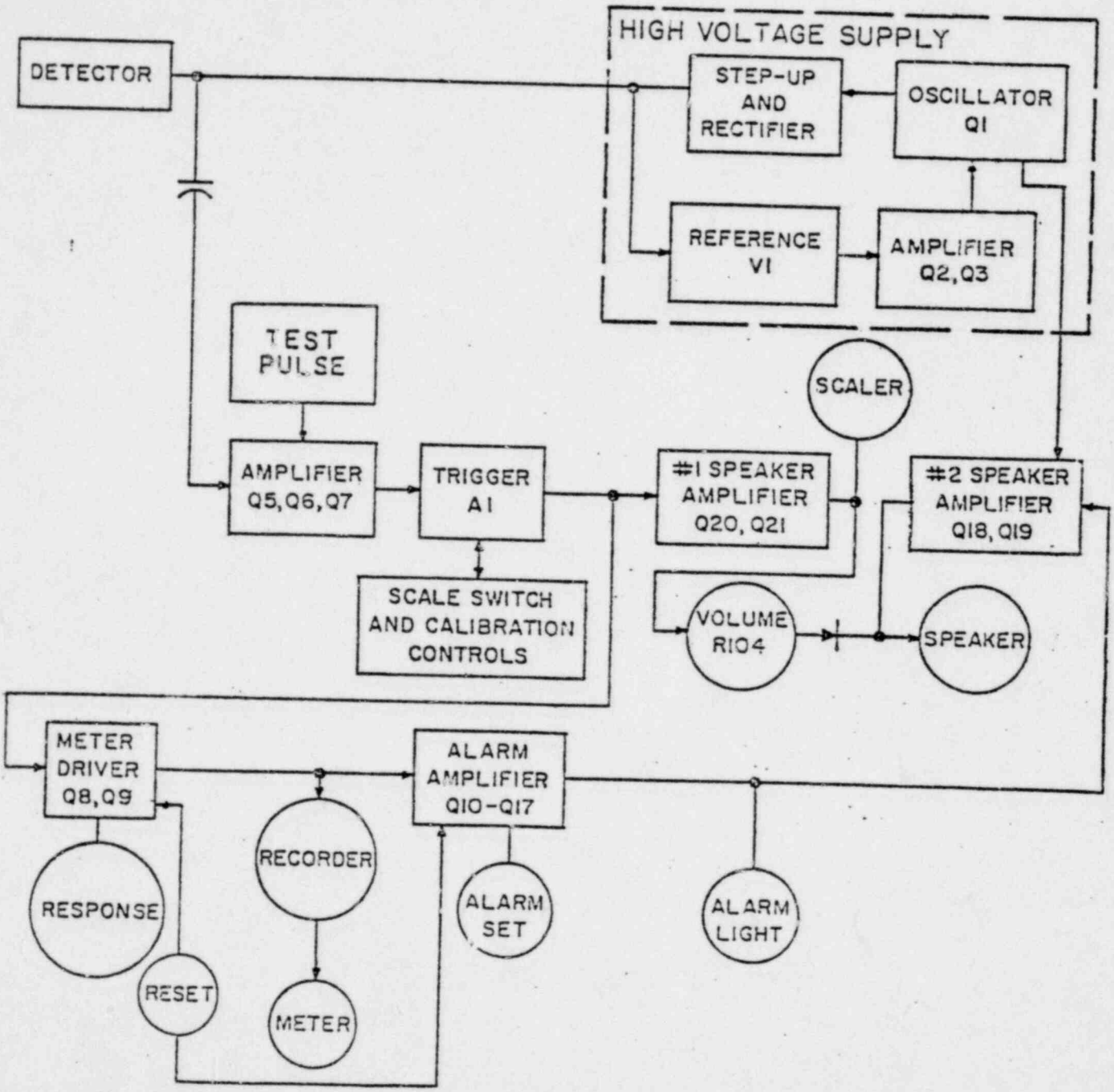

Figure 3-1. System Block Diagram

When the RESET switch is closed, a voltage is applied to the base of Q16 and Q17, turning them on. Q17 returns the base of Q10 to near zero and also removes the charge from C11 and C12, returning the meter reading to zero. Q16 puts the base of Q15 at ground turning Q15 off. With Q15 off, the alarm light is turned off, the No. 2 speaker amplifier is disabled, and Q14 is turned off, resetting the alarm amplifier.

7. SPEAKER DRIVER No. 2

When Q15 is turned on (alarmed condition) Q18 and Q19 are enabled by grounding the emitter of Q18. The power supply oscillator frequency, approx. 1000 Hz, is amplified by Q18 and Q19 which drives the speaker. CR101 isolates the output from the volume control so alarm loudness is not affected by volume control setting.

8. POWER CIRCUITRY

The AC line voltage is stepped down by T101 and rectified by A101 and is used to trickle charge BT101. The charging current is set by R101. Since the line is not switched, the battery will be charging any time the instrument is plugged into the line, and the AC ON light will be lit.

The low voltage is regulated by Q4 and CR2.

9. TEST: Transistor Q201 is turned on during each positive half cycle of T101 secondary. The pulse on the collector of Q201 resulting from it turning on, is divided by R203 and R204, then capacitively coupled to the TEST switch. With the switch off the pulse is grounded and has no effect. With the switch on the pulse is inserted into the amplifier and causes the instrument to count at a 3600 CPM rate.

C. MODIFICATIONS

1. HIGH VOLTAGE

The high voltage can be changed from 900V to suit the type of detector being used by changing the regulator tube V1.

2. INPUT SENSITIVITY

The input sensitivity can be changed to 400 mv to suit certain geiger tubes. This change is made by removing the jumper on the P.C. socket at pins F and 6 and adding jumpers between pins 6 and 7 and pins F and H.

3. ALARM

The alarm can be made non-locking by removing the jumper on the P.C. socket between pins 18 and V.

4. RECORDER OUTPUT

The output signal may be changed from 50 amp to 10 millivolts full scale by adding a 200 ohm resistor across the output terminals.

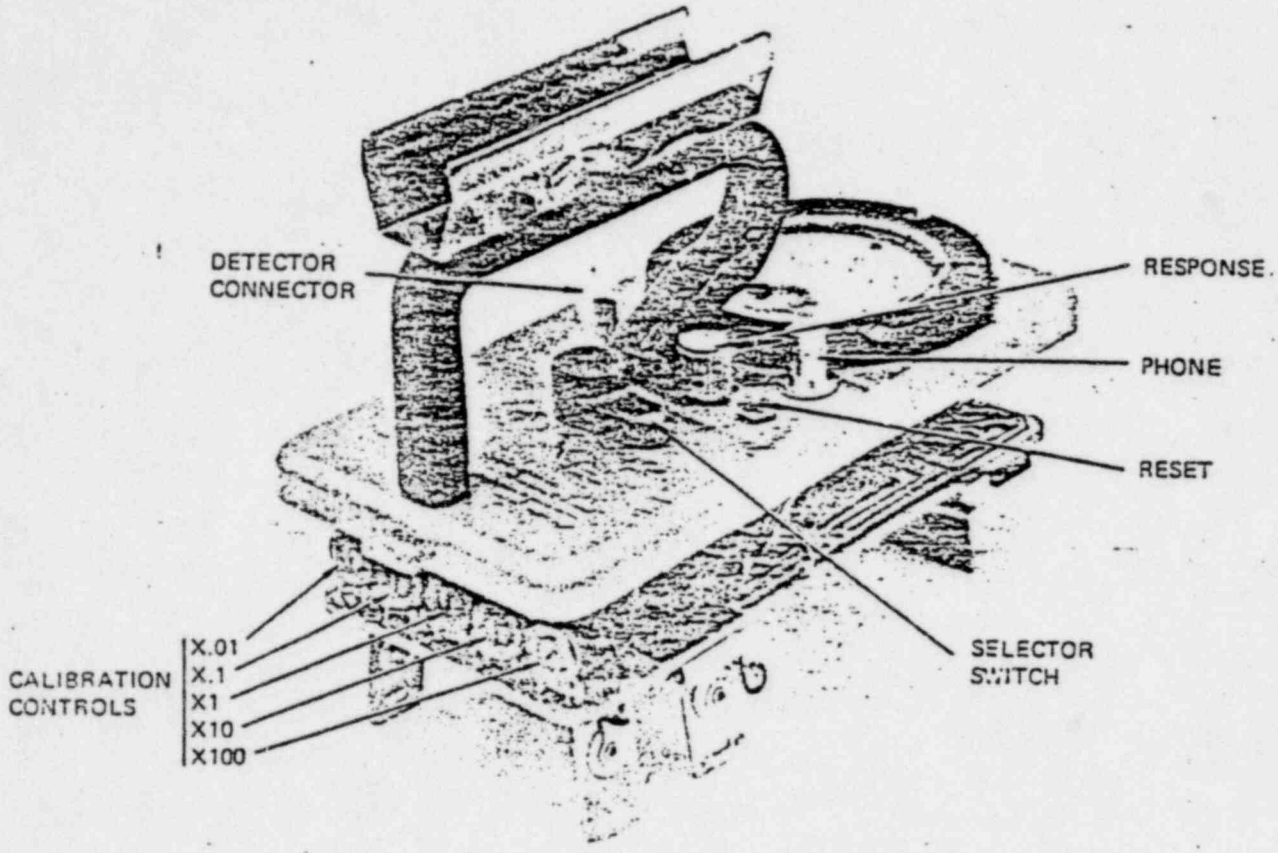

Figure 2-1. Location of Controls

SECTION II
OPERATION

A. DESCRIPTION OF CONTROLS AND CONNECTORS

1. EXTERNAL (See figure 2-1)

a. Switch: Seven position rotary switch that turns instrument OFF, checks BATTery condition and selects scale multipliers of X.01, X0.1, X1.0, X10 and X100. This number must be multiplied by the meter indication to obtain the proper reading.

b. RESPONSE: Controls response time of meter to the most desirable compromise between speed and fluctuation for the particular usage.

c. RESET: Discharges integrating capacitor, bringing meter reading to zero rapidly.

d. PHONE: Pulse output for use with earphone, speaker or external scaler. Mating connector is BNC series coaxial.

e. DETECTOR: Connection to hand probe. BNC series coaxial.

2. INTERNAL (See figure 2-1)

a. Calibration Controls: One control for each range which individually calibrates that range to agree with the input pulse rate.

B. PREPARATION FOR USE

1. INSPECTIONS

The instrument should be checked for physical damage.

2. CONNECTIONS

Connect the probe cable to the probe connector.

C. USING THE INSTRUMENT

1. STARTING

Turn the switch to the BATTery check position. The meter should indicate within the BATT OK area.

2. OPERATION CHECK

Place a check source in a repeatable position adjacent to the detector and move the switch to a range that gives an upscale reading. Note that the reading is sensitive to the position of the source. The reading may be recorded for future reference.

Push the RESET button and the reading should drop to zero rapidly, then climb back to source reading when the RESET is released. The RESPONSE may be adjusted to get the most desirable compromise between speed of response and meter fluctuation.

3. INTERPRETATION OF INDICATIONS

The meter reading must be multiplied by the scale factor to obtain the proper number. The fluctuation of the meter is normal and is caused by the random nature of radioactive decay.

MODEL E-520

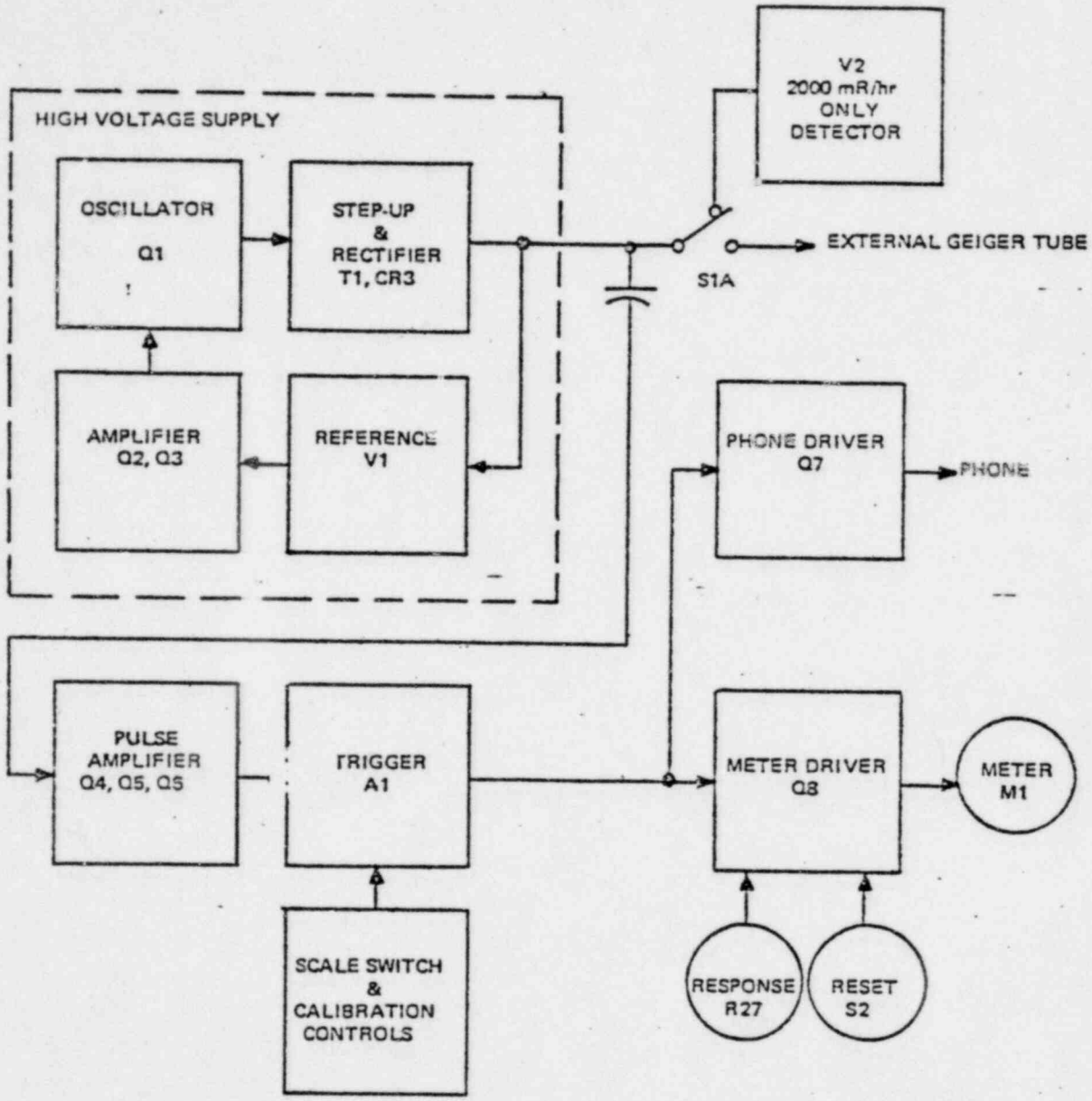

Figure 3-1. System Block Diagram

SECTION III
THEORY OF OPERATION

A. GENERAL

The high voltage supply develops +900 volts, which is applied to the geiger tube, giving it the proper operating voltage. When radiation reacts in the geiger tube, negative pulses are generated. These pulses are coupled into the amplifier where they are amplified. They are then coupled to the trigger circuit where they are converted to standard size pulses of power. These standard pulses are applied to the meter driver which converts them to standard pulses of current, averages this current and drives the meter. Thus the meter deflection is proportional to the average rate of radiation at the geiger tube.

B. FUNCTIONAL THEORY (See figures 3-1 and 6-1)

1. HIGH VOLTAGE SUPPLY

The oscillator transistor (Q1) drives T1 primary and gets its feedback from T1's red-orange winding. The voltage is stepped up by T1's secondary, rectified, filtered and applied to V1. V1 regulates at 900 volts. The current through V1 is sensed by Q2, amplified, and used to control the current through Q3. The current through Q3 controls the bias level of the oscillator Q1. This tends to hold the current through V1 to a constant value regardless of battery voltage. The result of this is that power is not wasted with new batteries, just so it will function with lower voltage batteries. This greatly extends battery life.

2. AMPLIFIER

Q4 and Q5 form a feedback controlled preamplifier which amplifies the negative pulses from the detector. The feedback enhances stability and the biasing on Q4 protects from overdrive. Q6 is biased just into cut-off so its output is near 0 volts. A pulse turns it on and the resulting positive output pulse starts the trigger circuit.

3. TRIGGER

Integrated circuit A1 is connected to operate as a mono-stable multivibrater whose pulse width is controlled by the RC time constant between its pins 7 and 5. This time constant is established by the setting of S1D (scale selection) which selects a particular R and C. The calibration controls form the R for each scale, making the pulse width continuously adjustable for calibration.

When the trigger is initiated by the pulse from Q6 the output at pin 6 goes positive and holds until the predetermined time (RC) elapses.

4. METER DRIVER

The driver Q8 is normally off, so no current flows through M1. When the trigger is on, Q8 is turned on and current flows. The amount of current is determined by the voltage on the base of Q8 and R25. The length of time that current flows is determined by the pulse width of the trigger. This (current times time) for a certain charge which is transferred to C10 for each event counted. C10 discharges through M1, yielding a certain average current dependent on the rate of input pulses. Changing the pulse width of the trigger (i.e., changing scales or calibration pot setting) changes the average current for a given input pulse rate. This allows the meter to be calibrated to read in CPM or mR/hr at the detector.

The response time of M1 is controlled by the RC time constant of C10 and R27, the response control. With R27 set to low resistance the time constant is fast, and at high resistance it is slow.

5. PHONE DRIVER

Q7 amplifies and inverts the output pulse from the trigger, yielding a large amplitude negative going pulse which is capacitively coupled to the PHONE connector.

EBERLINE PORTABLE NEUTRON REM COUNTER

MODEL NO. PNR-4

Detects: Neutrons

Range: 0 to 5,000 mr/hr

Battery Pack: (5) five standard "D" cells

Detector: A BF_3 tube placed in the center of a 9 inch cadmium loaded, polyethelene sphere.

Operating Voltage: +1800 volts (Proportional Region)

Battery Voltage: 5.5 minimum to 8.0 maximum volts D.C.

External Description of Controls:

Switch: (rotary) Off-On, and Battery Check
High voltage adjust - turn clockwise to increase voltage
Earphone or speaker connection
Detector Connector

THEORY OF OPERATION

The BF_3 tube detects only Thermal neutrons. To allow the BF_3 tube to have a response which closely follows the theoretical dose from neutrons, (from 0.25 ev (Thermal) to 10 mev (Fast)), the cadmium captures some thermal neutrons and the polyethelene thermalizes (slows down) Fast neutrons so the BF_3 tube can detect them. Then the detector (BF_3 Tube) generates electrical pulses, when placed in a radioactive field. These pulses are amplified and applied to a pulse and the high (alpha) pulses cause the binary to change states. The square wave output is applied to the driver causing the meter to deflect. This reading is proportional to the intensity of the radioactive field at the detector.

EBERLINE NEUTRON INSTRUMENT

MODEL PNC-4

Detects: Fast or Thermal Neutron

Range: 0 to 500K counts per minute

Battery Pack: Five standard "D" cells

Detector: Boron Trifloride tube BF_3

Active area 1" diameter x 2" long

Operating Voltage: 1500 volts D.C.

Moderator: 1¼" of Parafin way enclosed in .03" of cadmium

External Description of Controls

Switch: On, Off, Battery Check
High Voltage Adjust
Phone Connection

THEORY OF OPERATION

DETECTOR: The detector tube is sensitive to slow neutrons directly. To detect fast neutrons it must be inserted in the moderator. Here the cadmium lining captures the slow and passes the fast neutrons; the fast ones are then moderated by the parafin so they are detectable by the tube.

When the B^{10} atom inside the tube captures a neutron, it releases an alpha particle. The energy released ionizes the gas in the tube. The negative ions are accelerated to the anode wire because of the positive high voltage applied. As they approach the wire, they have sufficient energy to ionize more atoms, causing ion amplification. The amount of amplification is controlled by the high voltage. The amplified current pulse is coupled through the cable into the instrument, then to the amplifier.

EBERLINE TELETECTOR

TOTAL NO. 6112

Detects:	Beta and measures Gamma, and traces of radioactive material or contamination.
Range:	0.1 mr/hr to 1000 R/hr.
Battery Pack:	(4) Four Standard "C" Cells.
Detector:	One High and One Low Range G.M. Tube, and a transistorized amplifier in the measuring probe.
Efficiency:	$\pm$ 10% (Calibrated with Co^{60} at 20° C)
Operating Voltage:	4.1 Volts to 5.8 Volts.

External Description of Controls:

Switch - (Rotary): On-Off and five positions, Battery Check.
Earphone Connection.
Slide scale operated by switch.
Detachable Beta Cap from end window.
Telescopic Probe.
Automatic Scale Illumination.
Batteries contained in handle.

THEORY OF OPERATION:

Radiation enters the window in the tip of the probe, striking the high and low range G.M. tubes. Pulses are amplified and connected to the cable inside of the telescopic probe, and to the direct reading scale. Earphones are connected to the amplifier. Selector switch automatically operates the slide scale.

INSTRUCTION SHEET

HAND PROBE, MODEL HP-210

GENERAL DESCRIPTION

The Model HP-210 Hand Probe is a rugged, sensitive detector for monitoring beta radiation from very low energies and up. This hand probe offers a thin mica window, a large open area protected by a sturdy wire screen which allows useful sensitivities for beta energies down to about 40 KEV. It is ideal for contamination control when used as a personnel frisker, or for monitoring of tables, floors, equipment, etc. The high density tungsten shield makes it possible to monitor for low levels of beta radiation in a gamma field.

When monitoring in a low level radiation field you may use an aluminum probe housing in place of the tungsten shield for considerable weight reduction.

The Model HP-210 Hand Probe may be used on any +900 volt portable instrument or laboratory monitor.

SPECIFICATIONS

OPERATING VOLTAGE: 900 ±50 volts.
PLATEAU LENGTH: 100 volts min.
PLATEAU SLOPE: 0.1%/volt max.
DEAD TIME: 100 usec max.
TEMPERATURE RANGE: -55°C to +75°C.
LIFE: Unaffected by operation.
MICA WINDOW THICKNESS: 1.4 to 2.0 mg/cm^2.
MICA WINDOW AREA: 15 cm^2 (1-3/4 in. dia.).
SERIES RESISTOR (in probe): 3.3 megohms.
GAMMA SENSITIVITY (^{60}Co into window): Approx. 6,000 CPM/mr/hr.
SHIELDING RATIO (front to back ^{60}Co): Approx. 4:1.
*BETA EFFICIENCY (1 in. dia. source 2π).
^{90}Sr-^{90}Y (E max. .54 - 2.2 MEV): Approx. 45%
^{99}Tc (E max. .29 MEV): Approx. 30%
^{14}C (E max. .15 MEV): Approx. 10%
CONNECTOR: BNC Series Coaxial.
SIZE: 6-1/2 in. L x 3-1/2 in. W x 3-1/8 in. H.
WEIGHT: 4-1/4 pounds with shield, 1-1/2 pounds without shield.
SHIELD: High Density Tungsten.

*All efficiencies with screen in place. Removal of screen will increase given efficiencies by approx. 40%.

APPLICATION

When monitoring with the HP-210, hold the window as close as possible to the surface being checked. The reading obtained from the counter used with the HP-210 will depend on the calibration method of that counter. If the counter has a "counts per minute" (CPM) scale and is calibrated to true pulse repetition rate, such as the E-120, it will read the true count rate from the HP-210. If the counter has a "mr/hr" scale which is calibrated to a gamma field with a different detector, such as the E-510 or E-500B with HP-177B, a conversion factor should be developed to convert readings to CPM. This factor is approximately 1400 CPM per mr/hr for the HP-177B with ^{60}Co.

EBERLINE Instrument Corporation

P.O. Box 2108 Santa Fe, New Mexico 87501
Phone 505-982-1881 TWX 910-985-0678

FIELD TEST PROCEDURES
SK-1 SPEAKER

A. APPLICATION: The following test procedures generally apply to all portable instruments with phone connections.

B. REQUIREMENTS:

1. Portable instrument with speaker mounted and cable connected.

2. Check source of appropriate radioactive material.

C. OPERATIONAL CHECK TO BE PERFORMED:

1. Turn instrument "ON", Range Switch to X1.0 scale and speaker switch "ON".

2. Move probe part of instrument into radiation field until a steady clicking sound is heard and the instrument meter reads upscale. Turn speaker switch "OFF". There should be no change in the average meter reading. Remove the speaker cable, again there should be no change in the average meter reading.

3. Replace speaker cable and turn speaker switch "ON". A steady audible clicking should again be heard.

4. Place range scale switch in all other positions, there should be no change in the repetition rate of the clicks from the speaker. Repeat para. C2 for each step of the range scale switch.

INSTALLATION INSTRUCTIONS

These installation instructions adapt the Speaker SK-1 to Portable Instruments having phone connections.

A. MATERIALS INCLUDING SPEAKER.

1. Speaker Assembly SK-1 w/cable.

2. Mounting Clip w/hardware, consisting of 2 ea. 4 - 40 x 1/4" o-ring seal head, SS, screws and 2 ea. 4 - 40, SS, elastic stop nuts.

B. INSTRUCTIONS: Remove the instrument from the case. Using template provided at bottom of page, center punch and drill 1/8" holes in case. Mount clip with screws provided. These are special screws with o-ring seal. DO NOT substitute. These screws should be used with the head inside measuring instrument case. Mount speaker on clip and connect cable.

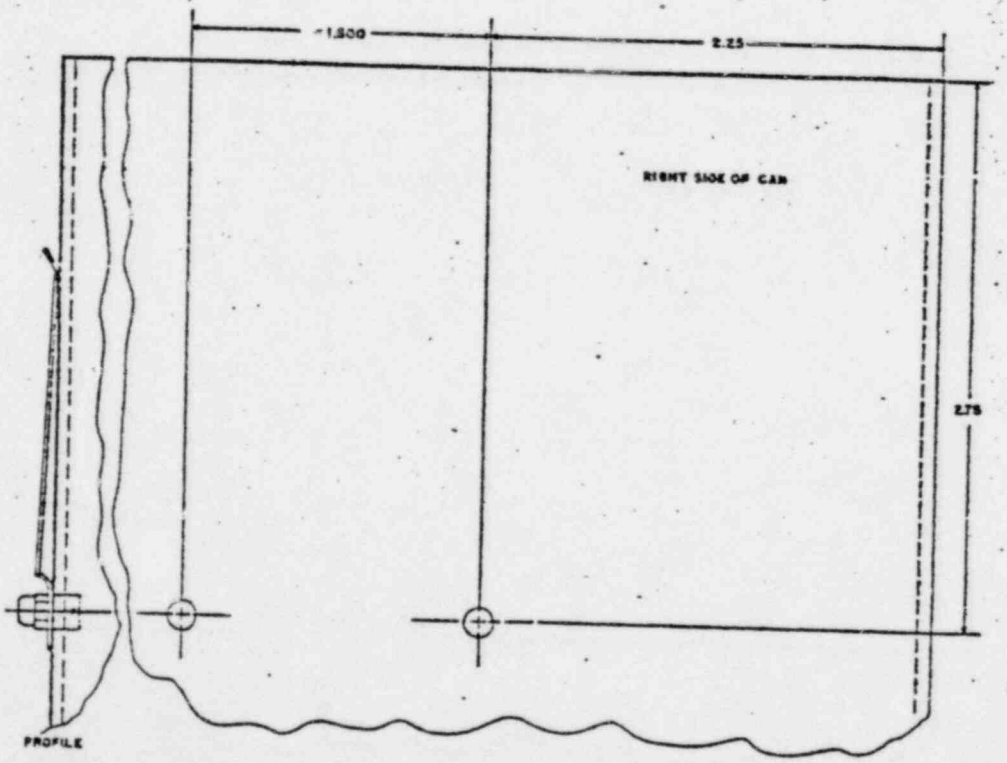

EBERLINE ALPHA INSTRUMENT

Model PAC-4S

Detects: Alpha
Range: 0 to 2 x 10^6 counts per minute
Battery Pack: Five Standard "D" cells
Detector: Zinc Sulphide, silver activated (scintillation)
59 cm^2- window thickness, covered 1.5 mg/cm^2 mylar
Efficiency: 28% for γ
Operating Voltage: 1200 VDC
External Description of Controls:
Switch - on, off, battery check
High voltage adjust
Phone connection

Theory of Operation

When an alpha particle penetrates the window and strikes the scintillation phosphor, it generates light. This light is detected by the PM tube, converted to current and amplified. The amount of amplification is controlled by the high voltage applied to the PM tube. The amplified current pulse is coupled through the cable into the instrument, then into the amplifier.

11. 10 CFR 20 -

Standards for protection against radiation follows this page.

PART 20 STANDARDS FOR PROTECTION AGAINST RADIATION

GENERAL PROVISIONS

Sec.
20.1 Purpose.
20.2 Scope.
20.3 Definitions.
20.4 Units of radiation dose.
20.5 Units of radioactivity.
20.6 Interpretations.
20.7 Communications.

PERMISSIBLE DOSES, LEVELS, AND CONCENTRATIONS

20.101 Exposure of individuals to radiation in restricted areas.
20.102 Determination of accumulated dose.
20.103 Exposure of individuals to concentrations of radioactive material in restricted areas.
20.104 Exposure of minors.
20.105 Permissible levels of radiation in unrestricted areas.
20.106 Radioactivity in effluents to unrestricted areas.
20.107 Medical diagnosis and therapy.
20.108 Orders requiring furnishing of bioassay services.

PRECAUTIONARY PROCEDURES

20.201 Surveys.
20.202 Personnel monitoring.
20.203 Caution signs, labels, signals, and controls.
20.204 Same: exceptions.
20.205 Procedures for picking up, receiving, and opening packages.
20.206 Instruction of personnel.
20.207 Storage of licensed materials.

WASTE DISPOSAL

20.301 General requirement.
20.302 Method for obtaining approval of proposed disposal procedures.
20.303 Disposal by release into sanitary sewerage systems.
20.304 Disposal by burial in soil.
20.305 Treatment or disposal by incineration.

RECORDS, REPORTS, AND NOTIFICATION

20.401 Records of surveys, radiation monitoring, and disposal.
20.402 Reports of theft or loss of licensed material.
20.403 Notifications of incidents.
20.404 [Reserved]
20.405 Reports of overexposures and excessive levels and concentrations.
20.406 [Reserved]
20.407 Personnel exposure and monitoring reports.
20.408 Reports of personnel exposure on termination of employment or work.
20.409 Notifications and reports to individuals.

EXCEPTIONS AND ADDITIONAL REQUIREMENTS

20.501 Applications for exemptions.
20.502 Additional requirements.

ENFORCEMENT

20.601 Violations

Appendix A—[Reserved]
Appendix B—Concentrations in air and water above natural background.
Appendix C.
Appendix D—United States Nuclear Regulatory Commission Inspection and Enforcement Regional Offices.

AUTHORITY: The provisions of this Part 20 issued under secs. 53, 63, 65, 81, 103, 104, 161, 68 Stat. 930, 933, 935, 936, 937, 948, as amended; 42 U.S.C. 2073, 2093, 2095, 2111, 2133, 2134, 2201. For the purposes of sec. 223, 68 Stat. 958, as amended; 42 U.S.C. 2273, §§20.401-20.409, issued under sec. 161 o., 68 Stat. 950, as amended; 42 U.S.C. 2201 (o). Secs. 202, 206, Pub. L. 93-438, 88 Stat. 1244, 1246 (42 U.S.C. 5842, 5846).

40 FR 8774

§ 20.1 Purpose.

(a) The regulations in this part establish standards for protection against radiation hazards arising out of activities under licenses issued by the Nuclear Regulatory Commission and are issued pursuant to the Atomic Energy Act of 1954, as amended, and the Energy Reorganization Act of 1974.

25 FR 10914

(b) The use of radioactive material or other sources of radiation not licensed by the Commission is not subject to the regulations in this part. However, it is the purpose of the regulations in this part to control the possession, use, and transfer of licensed material by any licensee in such a manner that exposure to such material and to radiation from such material, when added to exposures to unlicensed radioactive material and to other unlicensed sources of radiation in the possession of the licensee, and to radiation therefrom, does not exceed the standards of radiation protection prescribed in the regulations in this part.

35 FR 18305

(c) In accordance with recommendations of the Federal Radiation Council, approved by the President, persons engaged in activities under licenses issued by the Nuclear Regulatory Commission pursuant to the Atomic Energy Act of 1954, as amended, and the Energy Reorganization Act of 1974 should, in addition to complying with the requirements set forth in this part, make every reasonable effort to maintain radiation exposures, and releases of radioactive materials in effluents to unrestricted areas, as far below the limits specified in this part as practicable. The term "as far below the limits specified in this part as practicable" means as low as is practicably achievable taking into account the state of technology, and the economics of improvements in relation to benefits to the public health and safety and in relation to the utilization of atomic energy in the public interest.

35 FR 18335

40 FR 8774

§ 20.2 Scope.

The regulations in this part apply to all persons who receive, possess, use, or transfer material licensed pursuant to the regulations in Parts 30 through 35, 40, or 70 of this chapter, including persons licensed to operate a production or utilization facility pursuant to Part 50 of this chapter.

§ 20.3 Definitions.

(a) As used in this part:

(1) "Act" means the Atomic Energy Act of 1954 (68 Stat. 919) including any amendments thereto;

(2) "Airborne radioactive material" means any radioactive material dispersed in the air in the form of dusts, fumes, mists, vapors, or gases;

(3) "Byproduct material" means any radioactive material (except special nuclear material) yielded in or made radioactive by exposure to the radiation incident to the process of producing or utilizing special nuclear material;

(4) "Calendar quarter" means not less than 12 consecutive weeks nor more than 14 consecutive weeks. The first calendar quarter of each year shall begin in January and subsequent calendar quarters shall be such that no day is included in more than one calendar quarter or omitted from inclusion within a calendar quarter. No licensee shall change the method observed by him of determining calendar quarters except at the beginning of a calendar year.

(5) "Commission" means the Nuclear Regulatory Commission or its duly authorized representatives;

(6) "Government agency" means any executive department, commission, independent establishment, corporation, wholly or partly owned by the United States of America which is an instrumentality of the United States, or any board, bureau, division, service, office, officer, authority, administration, or other establishment in the executive branch of the Government;

(7) "Individual" means any human being;

(8) "Licensed material" means source material, special nuclear material, or byproduct material received, possessed, used, or transferred under a general or specific license issued by the Commission pursuant to the regulations in this chapter;

(9) "License" means a license issued under the regulations in Part 30, 40, or 70 of this chapter. "Licensee" means the holder of such license;

(10) "Occupational dose" includes exposure of an individual to radiation (i) in a restricted area; or (ii) in the course of employment in which the individual's duties involve exposure to radiation; provided, that "occupational dose" shall not be deemed to include any exposure of an individual to radiation for the purpose of medical diagnosis or medical therapy of such individual.

(11) "Person" means (i) any individual, corporation, partnership, firm, association, trust, estate, public or private institution, group, Government agency other than the Commission or the Administration (except that the Administration shall be considered a person within the meaning of the regulations in this part to the extent that its facilities and activities are subject to the licensing and related regulatory authority of the Commission pursuant to section 202 of the Energy Reorganization Act of 1974 (88 Stat. 1244)), any State, any foreign government or nation or any political subdivision of any such government or nation, or other entity; and (ii) any legal successor, representative, agent, or agency of the foregoing.

(12) "Radiation" means any or all of the following: alpha rays, beta rays, gamma rays, X-rays, neutrons, high-speed electrons, high-speed protons, and other atomic particles; but not sound or radio waves, or visible, infrared, or ultraviolet light;

(13) "Radioactive material" includes any such material whether or not subject to licensing control by the Commission;

(14) "Restricted area" means any area access to which is controlled by the licensee for purposes of protection of individuals from exposure to radiation and radioactive materials. "Restricted area" shall not include any areas used as residential quarters, although a separate room or rooms in a residential building may be set apart as a restricted area;

(15) "Source material" means (i) uranium or thorium, or any combination thereof, in any physical or chemical form; or (ii) ores which contain by weight one-twentieth of one percent (0.05%) or more of *a*, uranium, *b*, thorium or *c*, any combination thereof. Source material does not include special nuclear material.

(16) "Special nuclear material" means (1) plutonium, uranium 233, uranium enriched in the isotope 233 or in the isotope 235, and any other material which the Commission, pursuant to the provisions of section 51 of the act, determines to be special nuclear material, but does not include source material; or (ii) any material artificially enriched by any of the foregoing but does not include source material;

(17) "Unrestricted area" means any area access to which is not controlled by the licensee for purposes of protection of individuals from exposure to radiation and radioactive materials, and any area used for residential quarters.

(18) "Administration" means the Energy Research and Development Administration or its duly authorized representatives.

(b) Definitions of certain other words and phrases as used in this part are set forth in other sections, including:

(1) "Airborne radioactivity area" defined in § 20.203;

(2) "Radiation area" and "high radiation area" defined in § 20.202;

(3) "Personnel monitoring equipment" defined in § 20.202;

(4) "Survey" defined in § 20.201;

(5) Units of measurement of dose (rad, rem) defined in § 20.4;

(6) Units of measurement of radioactivity defined in § 20.5.

§ 20.4 Units of radiation dose.

(a) "Dose," as used in this part, is the quantity of radiation absorbed, per unit of mass, by the body or by any portion of the body. When the regulations in this part specify a dose during a period of time, the dose means the total quantity of radiation absorbed, per unit of mass, by the body or by any portion of the body during such period of time. Several different units of dose are in current use. Definitions of units as used in this part are set forth in paragraphs (b) and (c) of this section.

(b) The rad, as used in this part, is a measure of the dose of any ionizing radiation to body tissues in terms of the energy absorbed per unit mass of the tissue. One rad is the dose corresponding to the absorption of 100 ergs per gram of tissue. (One millirad (mrad) = 0.001 rad.)

(c) The rem, as used in this part, is a measure of the dose of any ionizing radiation to body tissue in terms of its estimated biological effect relative to a dose of one roentgen (r) of X-rays. (One millirem (mrem) = 0.001 rem.) The relation of the rem to other dose units depends upon the biological effect under consideration and upon the conditions of irradiation. For the purpose of the regulations in this part, any of the following is considered to be equivalent to a dose of one rem:

(1) A dose of 1 *r* due to X— or gamma radiation;

(2) A dose of 1 rad due to X—, gamma, or beta radiation;

(3) A dose of 0.1 rad due to neutrons or high energy protons;

(4) A dose of 0.05 rad due to particles heavier than protons and with sufficient energy to reach the lens of the eye;

If it is more convenient to measure the neutron flux, or equivalent, than to determine the neutron dose in rads, as provided in subparagraph (3) of this paragraph, one rem of neutron radiation may, for purposes of the regulations in this part, be assumed to be equivalent to 14 million neutrons per square centimeter incident upon the body; or, if there exists sufficient information to estimate with reasonable accuracy the approximate distribution in energy of the neutrons, the incident number of neutrons per square centimeter equivalent to one rem may be estimated from the following table:

NEUTRON FLUX DOSE EQUIVALENTS

Neutron energy (Mev)	Number of neutrons per square centimeter equivalent to a dose of 1 rem (neutrons/cm²)	Average flux to deliver 100 millirem in 40 hours (neutrons/cm² per sec.)
Thermal	970×10^6	670
0.0001	720×10^6	570
0.005	820×10^6	570
0.02	400×10^6	2[illegible]
0.1	120×10^6	
0.5	43×10^6	
1.0	28×10^6	
2.5	29×10^6	20
5.0	25×10^6	18
7.5	24×10^6	17
10	24×10^6	17
10 to 30	14×10^6	10

(d) For determining exposures to X or gamma rays up to 3 Mev, the dose limits specified in §§ 20.101 to 20.104, inclusive, may be assumed to be equivalent to the "air dose". For the purpose of this part "air dose" means that the dose is measured by a properly calibrated appropriate instrument in air at or near the body surface in the region of highest dosage rate.

§ 20.5 Units of radioactivity.

(a) Radioactivity is commonly, and for purposes of the regulations in this part shall be, measured in terms of disintegrations per unit time or in curies. One curie = 3.7×10^{10} disintegrations per second (dps) = 2.2×10^{12} disintegrations per minute (dpm). Commonly used submultiples of the curie are the millicurie and the microcurie:

(1) One millicurie (mCi) [1] = 0.001 curie (Ci) [1] = 3.7×10^7 dps.

(2) One microcurie (μCi) [1] = 0.000001 curie = 3.7×10^4 dps.

(b) For purposes of the regulations in this part, it may be assumed that the

[1] Wherever possible, the appropriate units should be written out as "curie(s)," "millicurie(s)," or "microcurie(s)," and the abbreviations should not be used.

daughter activity concentrations in the following table are equivalent to an air concentration of 10^{-7} microcuries of Radon 222 per milliliter of air in equilibrium with the daughters RaA, RaB, RaC, and RaC':

Maximum time between collection and measurement (hours) *	Alpha-emitting daughter activity collected per milliliter of air	
	Microcuries/cc	Total alpha disintegrations per minute per cc.
0.5	7.2×10^{-4}	0.16
1	4.5×10^{-4}	0.10
2	1.3×10^{-4}	0.029
3	0.3×10^{-4}	0.0092

(c) *

25 FR 10914

§ 20.6 Interpretations.

Except as specifically authorized by the Commission in writing, no interpretation of the meaning of the regulations in this part by any officer or employee of the Commission other than a written interpretation by the General Counsel will be recognized to be binding upon the Commission.

40 FR 8774

§ 20.7 Communications.

Except where otherwise specified in this part, all communications and reports concerning the regulations in this part should be addressed to the Executive Director for Operations, U.S. Nuclear Regulatory Commission, Washington, D.C. 20555. Communications, reports, and applications may be delivered in person at the Commission's offices at 1717 H Street NW., Washington, D.C.; or at 7920 Norfolk Avenue, Bethesda, Maryland.

25 FR 10914

** PERMISSIBLE DOSES, LEVELS, AND CONCENTRATIONS

§ 20.101 Exposure of individuals to radiation in restricted areas.

(a) Except as provided in paragraph (b) of this section, no licensee shall possess, use, or transfer licensed material in such a manner as to cause any individual in a restricted area to receive in any period of one calendar quarter from radioactive material and other sources of radiation in the licensee's possession a dose in excess of the limits specified in the following table:

Rems per calendar quarter

1. Whole body; head and trunk; active blood-forming organs; lens of eyes; or gonads	1¼
2. Hands and forearms; feet and ankles	18¾
3. Skin of whole body	7½

(b) A licensee may permit an individual in a restricted area to receive a dose to the whole body greater than that permitted under paragraph (a) of this section, provided:

(1) During any calendar quarter the dose to the whole body from radioactive material and other sources of radiation in the licensee's possession shall not exceed 3 rems; and

(2) The dose to the whole body, when added to the accumulated occupational dose to the whole body, shall not exceed 5 (N−18) rems where "N" equals the individual's age in years at his last birthday; and

(3) The licensee has determined the individual's accumulated occupational dose to the whole body on Form NRC-4, or on a clear and legible record containing all the information required in that form; and has otherwise complied with the requirements of § 20.102. As used in paragraph (b), "Dose to the whole body" shall be deemed to include any dose to the whole body, gonads, active blood-forming organs, head and trunk, or lens of eye.

25 FR 10914

§ 20.102 Determination of accumulated dose.

(a) This section contains requirements which must be satisfied by licensees who propose, pursuant to paragraph (b) of § 20.101, to permit individuals in a restricted area to receive exposure to radiation in excess of the limits specified in paragraph (a) of § 20.101.

(b) Before permitting any individual in a restricted area to receive exposure to radiation in excess of the limits specified in paragraph (a) of § 20.101, each licensee shall:

(1) Obtain a certificate on Form NRC-4, or on a clear and legible record containing all the information required in that form, signed by the individual showing each period of time after the individual attained the age of 18 in which the individual received an occupational dose of radiation; and

(2) Calculate on Form NRC-4 in accordance with the instructions appearing therein, or on a clear and legible record containing all the information required in that form, the previously accumulated occupational dose received by the individual and the additional dose allowed for that individual under § 20.101(b).

(c)(i) In the preparation of Form NRC-4, or a clear and legible record containing all the information required in that form, the licensee shall make a reasonable effort to obtain reports of the individual's previously accumulated occupational dose. For each period for which the licensee obtains such reports, the licensee shall use the dose shown in the report in preparing the form. In any case where a licensee is unable to obtain reports of the individual's occupational dose for a previous complete calendar quarter, it shall be assumed that the individual has received the occupational dose specified in whichever of the following columns apply:

Part of body	Column 1 Assumed exposure in rems for calendar quarters prior to Jan. 1, 1961	Column 2 Assumed exposure in rems for calendar quarters beginning on or after Jan. 1, 1961
Whole body, gonads, active blood-forming organs, head and trunk, lens of eye.	3¾	1

(2) The licensee shall retain and preserve records used in preparing Form NRC-4.

If calculation of the individual's accumulated occupational dose for all periods prior to January 1, 1961 yields a result higher than the applicable accumulated dose value for the individual as of that date, as specified in paragraph (b) of § 20.101, the excess may be disregarded.

25 FR 10914

§ 20.103 Exposure of individuals to concentrations of radioactive material in restricted areas.

(a) No licensee shall possess, use or transfer licensed material in such a manner as to cause any individual in a restricted area to be exposed to airborne radioactive material possessed by the licensee in an average concentration in excess of the limits specified in Appendix B, Table I, of this part. "Expose" as used in this section means that the individual is present in an airborne concentration. No allowance shall be made for the use of protective clothing or equipment, or particle size, except as authorized by the Commission pursuant to paragraph [illegible] of this section.

(b) The limits given in Appendix B Table I, of this part are based upon exposure to the concentrations specified for forty hours in any period of seven consecutive days. In any such period where the number of hours of exposure is less than forty, the limits specified in the table may be increased proportionately. In any such period where the number of hours of exposure is greater than forty, the limits specified in the table shall be decreased proportionately.

(c)(1) Except as authorized by the Commission pursuant to this paragraph, no allowance shall be made for particle size or the use of protective clothing or equipment in determining whether an individual is exposed to an airborne concentration in excess of the limits specified in Appendix B, Table I.

(2) The Commission may authorize a licensee to expose an individual in a restricted area to airborne concentrations in excess of the limits specified in Appendix B, Table I, upon receipt of an application demonstrating that the concentration is composed in whole or in part of particles of such size that such particles are not respirable; and that the individual will not inhale the concentrations in excess of the limits established in Appendix B, Table I. Each application under this subparagraph shall include an analysis of particle sizes in the concentrations; and a description

* The duration of sample collection and the duration of measurement should be sufficiently short compared to the time between collection and measurement, as not to have a statistically significant effect upon the results.

* Deleted 39 FR 23990.

** Amended 36 FR 1466.

of the methods used in determining the particle sizes.

(3) The Commission may authorize a licensee to expose an individual in a restricted area to airborne concentrations in excess of the limits specified in Appendix B, Table I, upon receipt of an application demonstrating that the individual will wear appropriate protective equipment and that the individual will not inhale, ingest or absorb quantities of radioactive material in excess of those which might otherwise be permitted under this part for employees in restricted areas during a 40-hour week. Each application under this subparagraph shall contain the following information:

(i) A description of the protective equipment to be employed, including the efficiency of the equipment for the material involved;

(ii) Procedures for the fitting, maintenance and cleaning of the protective equipment; and

(iii) Procedures governing the use of the protective equipment, including supervisory procedures and length of time the equipment will be used by the individuals in each work week. The proposed periods for use of the equipment by any individual should not be of such duration as would discourage observance by the individual of the proposed procedures; and

(iv) The average concentrations present in the areas occupied by employees.

25 FR 10914

§ 20.104 Exposure of minors.

(a) No licensee shall possess, use or transfer licensed material in such a manner as to cause any individual within a restricted area who is under 18 years of age, to receive in any period of one calendar quarter from radioactive material and other sources of radiation in the licensee's possession a dose in excess of 10 percent of the limits specified in the table in paragraph (a) of § 20.101.

(b) No licensee shall possess, use or transfer licensed material in such a manner as to cause any individual within a restricted area, who is under 18 years of age to be exposed to airborne radioactive material possessed by the licensee in an average concentration in excess of the limits specified in Appendix B, Table II of this part. For purposes of this paragraph, concentrations may be averaged over periods not greater than a week.

(c) The provisions of paragraph (c) of § 20.103, shall apply to exposures subject to paragraph (b) of this section.

§ 20.105 Permissible levels of radiation in unrestricted areas.

(a) There may be included in any application for a license or for amendment of a license proposed limits upon levels of radiation in unrestricted areas resulting from the applicant's possession or use of radioactive material and other sources of radiation. Such applications should include information as to anticipated average radiation levels and anticipated occupancy times for each unrestricted area involved. The Commission will approve the proposed limits if the applicant demonstrates that the proposed limits are not likely to cause any individual to receive a dose to the whole body in any period of one calendar year in excess of 0.5 rem.

(b) Except as authorized by the Commission pursuant to paragraph (a) of this section, no licensee shall possess, use or transfer licensed material in such a manner as to create in any unrestricted area from radioactive material and other sources of radiation in his possession:

25 FR 10914

(1) Radiation levels which, if an individual were continuously present in the area, could result in his receiving a dose in excess of two millirems in any one hour, or

(2) Radiation levels which, if an individual were continuously present in the area, could result in his receiving a dose in excess of 100 millirems in any seven consecutive days.

§ 20.106 Radioactivity in effluents to unrestricted areas.

(a) A licensee shall not possess, use, or transfer licensed material so as to release to an unrestricted area radioactive material in concentrations which exceed the limits specified in Appendix "B", Table II of this part, except as authorized pursuant to § 20.302 or paragraph (b) of this section. For purposes of this section concentrations may be averaged over a period not greater than one year.

29 FR 14434

(b) An application for a license or amendment may include proposed limits higher than those specified in paragraph (a) of this section. The Commission will approve the proposed limits if the applicant demonstrates:

(1) That the applicant has made a reasonable effort to minimize the radioactivity contained in effluents to unrestricted areas; and

(2) That it is not likely that radioactive material discharged in the effluent would result in the exposure of an individual to concentrations of radioactive material in air or water exceeding the limits specified in Appendix "B", Table II of this part.

(c) An application for higher limits pursuant to paragraph (b) of this section shall include information demonstrating that the applicant has made a reasonable effort to minimize the radioactivity discharged in effluents to unrestricted areas, and shall include, as pertinent:

(1) Information as to flow rates, total volume of effluent, peak concentration of each radionuclide in the effluent, and concentration of each radionuclide in the effluent averaged over a period of one year at the point where the effluent leaves a stack, tube, pipe, or similar conduit;

(2) A description of the properties of the effluents, including:

(i) chemical composition;

(ii) physical characteristics, including suspended solids content in liquid effluents, and nature of gas or aerosol for air effluents;

(iii) the hydrogen ion concentrations (p^H) of liquid effluents; and

(iv) the size range of particulates in effluents released into air.

(3) A description of the anticipated human occupancy in the unrestricted area where the highest concentration radioactive material from the effluent expected, and, in the case of a river stream, a description of water uses downstream from the point of release of the effluent.

(4) Information as to the highest concentration of each radionuclide in an unrestricted area, including anticipated concentrations averaged over a period of one year:

(i) In air at any point of human occupancy; or

(ii) In water at points of use downstream from the point of release of the effluent.

(5) The background concentration of radionuclides in the receiving river or stream prior to the release of liquid effluent.

(6) A description of the environmental monitoring equipment, including sensitivity of the system, and procedures and calculations to determine concentrations of radionuclides in the unrestricted area and possible reconcentrations of radionuclides.

(7) A description of the waste treatment facilities and procedures used to reduce the concentration of radionuclides in effluents prior to their release.

(d) For the purposes of this section the concentration limits in Appendix "B", Table II of this part shall apply at the boundary of the restricted area. The concentration of radioactive material discharged through a stack, pipe or similar conduit may be determined with respect to the point where the material leaves the conduit. If the conduit discharges within the restricted area, the concentration at the boundary may be determined by applying appropriate factors for dilution, dispersion, or decay between the point of discharge and the boundary.

(e) In addition to limiting concentrations in effluent streams, the Commission may limit quantities of radioactive materials released in air or water during a specified period of time if it appears that the daily intake of radioactive material from air, water, or food by a suitable sample of an exposed population group, averaged over a period not exceeding one year, would otherwise exceed the daily intake resulting from continuous exposure to air or water containing one-third the concentration of radioactive materials specified in Appendix "B", Table II of this part.

(f) The provisions of this section do not apply to disposal of radioactive material into sanitary sewerage systems, which is governed by § 20.303

§ 20.107 Medical diagnosis and therapy.

Nothing in the regulations in this part shall be interpreted as limiting the intentional exposure of patients to radiation for the purpose of medical diagnosis or medical therapy.

25 FR 10914

§ 20.108 Orders requiring furnishing of bio-assay services.

Where necessary or desirable in order to aid in determining the extent of an

individual's exposure to concentrations of radioactive material, the Commission may incorporate appropriate provisions in any license, directing the licensee to make available to the individual appropriate bio-assay services and to furnish a copy of the reports of such services to the Commission.

PRECAUTIONARY PROCEDURES

§ 20.201 Surveys.

(a) As used in the regulations in this part, "survey" means an evaluation of the radiation hazards incident to the production, use, release, disposal, or presence of radioactive materials or other sources of radiation under a specific set of conditions. When appropriate, such evaluation includes a physical survey of the location of materials and equipment, and measurements of levels of radiation or concentrations of radioactive material present.

(b) Each licensee shall make or cause to be made such surveys as may be necessary for him to comply with the regulations in this part.

§ 20.202 Personnel monitoring.

(a) Each licensee shall supply appropriate personnel monitoring equipment to, and shall require the use of such equipment by:

(1) Each individual who enters a restricted area under such circumstances that he receives, or is likely to receive, a dose in any calendar quarter in excess of 25 percent of the applicable value specified in paragraph (a) of § 20.101.

(2) Each individual under 18 years of age who enters a restricted area under such circumstances that he receives, or is likely to receive, a dose in any calendar quarter in excess of 5 percent of the applicable value specified in paragraph (a) of § 20.101.

(3) Each individual who enters a high radiation area.

(b) As used in this part,

(1) "Personnel monitoring equipment" means devices designed to be worn or carried by an individual for the purpose of measuring the dose received (e. g., film badges, pocket chambers, pocket dosimeters, film rings, etc.);

(2) "Radiation area" means any area, accessible to personnel, in which there exists radiation, originating in whole or in part within licensed material, at such levels that a major portion of the body could receive in any one hour a dose in excess of 5 millirem, or in any 5 consecutive days a dose in excess of 100 millirems;

(3) "High radiation area" means any area, accessible to personnel, in which there exists radiation originating in whole or in part within licensed material at such levels that a major portion of the body could receive in any one hour a dose in excess of 100 millirem.

§ 20.203 Caution signs, labels, signals, and controls.

(a) *General.* (1) Except as otherwise authorized by the Commission, symbols prescribed by this section shall use the conventional radiation caution colors (magenta or purple on yellow background). The symbol prescribed by this section is the conventional three-bladed design:

RADIATION SYMBOL

1. Cross-hatched area is to be magenta or purple.
2. Background is to be yellow.

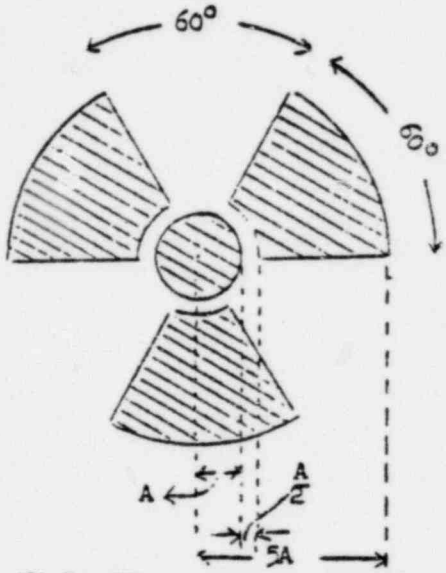

(2) In addition to the contents of signs and labels prescribed in this section, licensees may provide on or near such signs and labels any additional information which may be appropriate in aiding individuals to minimize exposure to radiation or to radioactive material.

(b) *Radiation areas.* Each radiation area shall be conspicuously posted with a sign or signs bearing the radiation caution symbol and the words:

CAUTION[1]
RADIATION AREA

(c) *High radiation areas.* (1) Each high radiation area shall be conspicuously posted with a sign or signs bearing the radiation caution symbol and the words:

CAUTION[1]
HIGH RADIATION AREA

(2) Each entrance or access point to a high radiation area shall be:

(i) Equipped with a control device which shall cause the level of radiation to be reduced below that at which an individual might receive a dose of 100 millirems in 1 hour upon entry into the area; or

(ii) Equipped with a control device which shall energize a conspicuous visible or audible alarm signal in such a manner that the individual entering the high radiation area and the licensee or a supervisor of the activity are made aware of the entry; or

(iii) Maintained locked except during periods when access to the area is required, with positive control over each individual entry.

(3) The controls required by subparagraph (2) of this paragraph shall be established in such a way that no individual will be prevented from leaving a high radiation area.

(4) In the case of a high radiation area established for a period of 30 days or less, direct surveillance to prevent unauthorized entry may be substituted for the controls required by subparagraph (2) of this paragraph.

(5) Any licensee, or applicant for a license, may apply to the Commission for approval of methods not included in subparagraphs (2) and (4) of this paragraph for controlling access to high radiation areas. The Commission will approve the proposed alternatives if the licensee or applicant demonstrates that the alternative methods of control will prevent unauthorized entry into a high radiation area, and that the requirement of subparagraph (3) of this paragraph is met.

(d) *Airborne radioactivity areas.* (1) As used in the regulations in this part, "airborne radioactivity area" means (i) any room, enclosure, or operating area in which airborne radioactive materials, composed wholly or partly of licensed material, exist in concentrations in excess of the amounts specified in Appendix B, Table I, Column 1 of this part; or (ii) any room, enclosure, or operating area in which airborne radioactive material composed wholly or partly of licensed material exists in concentrations which, averaged over the number of hours in any week during which individuals are in the area, exceed 25 percent of the amounts specified in Appendix B, Table I, Column 1 of this part.

(2) Each airborne radioactivity area shall be conspicuously posted with a sign or signs bearing the radiation caution symbol and the words:

CAUTION[1]
AIRBORNE RADIOACTIVITY AREA

(e) *Additional requirements.* (1) Each area or room in which licensed material is used or stored and which contains any radioactive material (other than natural uranium or thorium) in an amount exceeding 10 times the quantity of such material specified in Appendix C of this part shall be conspicuously posted with a sign or signs bearing the radiation caution symbol and the words:

CAUTION[1]
RADIOACTIVE MATERIAL(S)

(2) Each area or room in which natural uranium or thorium is used or stored in an amount exceeding one-hundred times the quantity specified in Appendix C of this part shall be conspicuously posted with a sign or signs bearing the radiation caution symbol and the words:

CAUTION[1]
RADIOACTIVE MATERIAL(S)

(f) *Containers.* (1) Except as provided in subparagraph (3) of this paragraph, each container of licensed mate-

[1] Or "Danger."

rial shall bear a durable, clearly visible label identifying the radioactive contents.

(2) A label required pursuant to subparagraph (1) of this paragraph shall bear the radiation caution symbol and the words "CAUTION, RADIOACTIVE MATERIAL" or "DANGER, RADIOACTIVE MATERIAL". It shall also provide sufficient information[1] to permit individuals handling or using the containers, or working in the vicinity thereof, to take precautions to avoid or minimize exposures.

(3) Notwithstanding the provisions of subparagraph (1) of this paragraph, labeling is not required:

(i) For containers that do not contain licensed materials in quantities greater than the applicable quantities listed in Appendix C of this part.

(ii) For containers containing only natural uranium or thorium in quantities no greater than 10 times the applicable quantities listed in Appendix C of this part.

(iii) For containers that do not contain licensed materials in concentrations greater than the applicable concentrations listed in Column 2, Table I, Appendix B of this part.

(iv) For containers when they are attended by an individual who takes the precautions necessary to prevent the exposure of any individual to radiation or radioactive materials in excess of the limits established by the regulations in this part.

(v) For containers when they are in transport and packaged and labeled in accordance with regulations of the Department of Transportation.

(vi) For containers which are accessible[2] only to individuals authorized to handle or use them, or to work in the vicinity thereof, provided that the contents are identified to such individuals by a readily available written record.

(vii) For manufacturing or process equipment, such as nuclear reactors, reactor components, piping, and tanks.

31 FR 10614

25 FR 10914

§ 20.204 Same: exceptions.

Notwithstanding the provisions of § 20.203,

(a) A room or area is not required to be posted with a caution sign because of the presence of a sealed source provided the radiation [illegible] twelve inches from the surface of [illegible] source container or housing does [illegible] exceed five millirem per hour.

(b) Rooms or other areas in hospitals are not required to be posted with caution signs, and control of entrance or access thereto pursuant to § 20.203(c) is not required, because of the presence of patients containing byproduct material provided that there are personnel in attendance who will take the precautions necessary to prevent the exposure of any individual to radiation or radioactive material in excess of the limits established in the regulations in this part.

35 FR 5033

25 FR 10914

(c) Caution signs are not required to be posted at areas or rooms containing radioactive materials for periods of less than eight hours provided that (1) the materials are constantly attended during such periods by an individual who shall take the precautions necessary to prevent the exposure of any individual to radiation or radioactive materials in excess of the limits established in the regulations in this part and; (2) such area or room is subject to the licensee's control.

35 FR 5033

(d) A room or other area is not required to be posted with a caution sign, and control is not required for each entrance or access point to a room or other area which is a high radiation area solely because of the presence of radioactive materials prepared for transport and packaged and labeled in accordance with regulations of the Department of Transportation.

39 FR 17972

§ 20.205 Procedures for picking up, receiving, and opening packages.

(a) (1) Each licensee who expects to receive a package containing quantities of radioactive material in excess of the Type A quantities specified in paragraph (b) of this section shall:

(i) If the package is to be delivered to the licensee's facility by the carrier, make arrangements to receive the package when it is offered for delivery by the carrier; or

(ii) If the package is to be picked up by the licensee at the carrier's terminal, make arrangements to receive notification from the carrier of the arrival of the package, at the time of arrival.

(2) Each licensee who picks up a package of radioactive material from a carrier's terminal shall pick up the package expeditiously upon receipt of notification from the carrier of its arrival.

(b) (1) Each licensee, upon receipt of a package of radioactive material, shall monitor the external surfaces of the package for radioactive contamination caused by leakage of the radioactive contents, except:

(i) Packages containing no more than the exempt quantity specified in the table in this paragraph;

(ii) Packages containing no more than 10 millicuries of radioactive material consisting solely of tritium, carbon-14, sulfur-35, or iodine-125;

(iii) Packages containing only radioactive material as gases or in special form;

(iv) Packages containing only radioactive material in other than liquid form (including Mo-99/Tc-99m generators) and not exceeding the Type A quantity limit specified in the table in this paragraph; and

(v) Packages containing only radionuclides with half-lives of less than 30 days and a total quantity of no more than 100 millicuries.

The monitoring shall be performed as soon as practicable after receipt, but later than three hours after the package is received at the licensee's facility if received during the licensee's normal working hours, or eighteen hours if received after normal working hours.

(2) If removable radioactive contamination in excess of 0.01 microcuries (22,000 disintegrations per minute) per 100 square centimeters of package surface is found on the external surfaces of the package, the licensee shall immediately notify the final delivering carrier and, by telephone and telegraph, the appropriate Nuclear Regulatory Commission Inspection and Enforcement Regional Office shown in Appendix D.

TABLE OF EXEMPT AND TYPE A QUANTITIES

Transport group[1]	Exempt quantity limit (in millicuries)	Type A quantity limit (in curies)
I	.01	0.001
II	0.1	0.050
III	1	3
IV	1	20
V	1	20
VI	1	1000
VII	25,000	1000
Special Form	1	20

39 FR 17972

(c) (1) Each licensee, upon receipt of a package containing quantities of radioactive material in excess of the Type A quantities specified in paragraph (b) of this section, other than those transported by exclusive use vehicle, shall monitor the radiation levels external to the package. The package shall be monitored as soon as practicable after receipt, but not later than three hours after the package is received at the licensee's facility if received during the licensee's normal working hours, or 18 hours if received after normal working hours.

(2) If radiation levels are found on the external surface of the package in excess of 200 millirem per hour, or at three feet from the external surface of the package in excess of 10 millirem per hour, the licensee shall immediately notify, by telephone and telegraph, the final delivering carrier and the appropriate Nuclear Regulatory Commission Inspection and Enforcement Regional Office shown in Appendix D.

(d) Each licensee shall establish and maintain procedures for safely opening packages in which licensed material is received, and shall assure that such procedures are followed and that due consideration is given to special instructions for the type of package being opened.

38 FR 22220

§ 20.206 Instruction of personnel.

Instructions required for individuals working in or frequenting any portion of a restricted area are specified in § 19.12 of this chapter.

[1] As appropriate, the information will include radiation levels, kinds of material, estimate of activity, date for which activity is estimated, mass enrichment, etc.

[2] For example, containers in locations such as water-filled canals, storage vaults, or hot cells.

* Amended 34 FR 19546.

[1] The definitions of "transport group" and "special form" are specified in § 71.4 of this chapter.

§ 20.207 Storage of licensed materials.

Licensed materials stored in an unrestricted area shall be secured against unauthorized removal from the place of storage.

WASTE DISPOSAL

§ 20.301 General requirement.

No licensee shall dispose of licensed material except:

(a) By transfer to an authorized recipient as provided in the regulations in Part 30, 40, or 70 of this chapter, whichever may be applicable; or

(b) As authorized pursuant to § 20.302; or

(c) As provided in § 20.303 or § 20.304, applicable respectively to the disposal of licensed material by release into sanitary sewerage systems or burial in soil, or in § 20.106 (Radioactivity in Effluents to Unrestricted Areas).

§ 20.302 Method for obtaining approval of proposed disposal procedures.

25 FR 10914

*(a) Any licensee or applicant for a license may apply to the Commission for approval of proposed procedures to dispose of licensed material in a manner not otherwise authorized in the regulations in this chapter. Each application should include a description of the licensed material and any other radioactive material involved, including the quantities and kinds of such material and the levels of radioactivity involved, and the proposed manner and conditions of disposal. The application should also include an analysis and evaluation of pertinent information as to the nature of the environment, including topographical, geological, meteorological, and hydrological characteristics; usage of ground and surface waters in the general area; the nature and location of other potentially affected facilities; and procedures to be observed to minimize the risk of unexpected or hazardous exposures.

28 FR 352

*(b) The Commission will not approve any application for a license to receive licensed material from other persons for disposal on land not owned by the Federal government or by a State government.

36 FR 23138

(c) The Commission will not approve any application for a license for disposal of licensed material at sea unless the applicant shows that sea disposal offers less harm to man or the environment than other practical alternative methods of disposal.

§ 20.303 Disposal by release into sanitary sewerage systems.

25 FR 10914

No licensee shall discharge licensed material into a sanitary sewerage system unless:

(a) It is readily soluble or dispersible in water; and

(b) The quantity of any licensed or other radioactive material released into the system by the licensee in any one day does not exceed the larger of subparagraphs (1) or (2) of this paragraph:

(1) The quantity which, if diluted by the average daily quantity of sewage released into the sewer by the licensee, will result in an average concentration equal to the limits specified in Appendix B, Table I, Column 2 of this part; or

(2) Ten times the quantity of such material specified in Appendix C of this part; and

(c) The quantity of any licensed or other radioactive material released in any one month, if diluted by the average monthly quantity of water released by the licensee, will not result in an average concentration exceeding the limits specified in Appendix B, Table I, Column 2 of this part; and

(d) The gross quantity of licensed and other radioactive material released into the sewerage system by the licensee does not exceed one curie per year.

Excreta from individuals undergoing medical diagnosis or therapy with radioactive material shall be exempt from any limitations contained in this section.

§ 20.304 Disposal by burial in soil.

25 FR 10914

No licensee shall dispose of licensed material by burial in soil unless:

(a) The total quantity of licensed and other radioactive materials buried at any one location and time does not exceed, at the time of burial, 1,000 times the amount specified in Appendix C of this part; and

(b) Burial is at a minimum depth of four feet; and

(c) Successive burials are separated by distances of at least six feet and not more than 12 burials are made in any year.

§ 20.305 Treatment or disposal by incineration.

34 FR 7500

No licensee shall treat or dispose of licensed material by incineration except as specifically approved by the Commission pursuant to §§ 20.106(b) and 20.302.

RECORDS, REPORTS, AND NOTIFICATION

§ 20.401 Records of surveys, radiation monitoring, and disposal.

(a) Each licensee shall maintain records showing the radiation exposures of all individuals for whom personnel monitoring is required under § 20.202 of the regulations in this part. Such records shall be kept on Form NRC-5, in accordance with the instructions contained in that form or on clear and legible records containing all the information required by Form NRC-5. The doses entered on the forms or records shall be for periods of time not exceeding one calendar quarter.

29 FR 17572

(b) Each licensee shall maintain records in the same units used in this part, showing the results of surveys required by § 20.201(b), monitoring required by §§ 20.205(b) and 20.205(c), and disposals made under §§ 20.302, 20.303, and 20.304.

35 FR 18100

(c) Records of individual exposure to radiation and to radioactive material which must be maintained pursuant to the provisions of paragraph (a) of this section and records of bio-assays, including results of whole body counting examinations, made pursuant to § 20.108 shall be preserved indefinitely or until the Commission authorizes their disposal. Records which must be maintained pursuant to this part may be maintained in the form of microfilms.

§ 20.402 Reports of theft or loss of licensed material.

(a) Each licensee shall report by telephone ~~and telegraph~~ to the Director of the appropriate Nuclear Regulatory Commission Inspection and Enforcement Regional Office listed in Appendix D, immediately after its occurrence becomes known to the licensee any loss or theft of licensed material in such quantities and under such circumstances that it appears to the licensee that a substantial hazard may result to persons in unrestricted areas.

(b) Each licensee who is required to make a telephonic and telegraphic report pursuant to paragraph (a) of this section shall, within 30 days after he learns of the loss or theft, make a report in writing to the Director of Inspection and Enforcement, U.S. Nuclear Regulatory Commission, Washington, D.C. 20555, with a copy to the Director of the appropriate Nuclear Regulatory Commission Inspection and Enforcement Regional Office listed in Appendix D,

setting forth the following information:

(1) A description of the licensed material involved, including kind, quantity, chemical, and physical form;

(2) A description of the circumstances under which the loss or theft occurred;

(3) A statement of disposition or probable disposition of the licensed material involved;

(4) Radiation exposures to individuals, circumstances under which the exposures occurred, and the extent of possible hazard to persons in unrestricted areas;

(5) Actions which have been taken, or will be taken, to recover the material; and

(6) Procedures or measures which have been or will be adopted to prevent a recurrence of the loss or theft of licensed material.

(c) Subsequent to filing the written report the licensee shall also report any substantive additional information on the loss or theft which becomes available to the licensee, within 30 days after he learns of such information.

(d) Any report filed with the Commission pursuant to this section shall be so prepared that names of individuals who may have received exposure to radiation are stated in a separate part of the report.

27 FR 5905

§ 20.403 Notifications of incidents.

(a) *Immediate notification.* Each licensee shall immediately notify the Director of the appropriate Nuclear Regulatory Commission Inspection and Enforcement Regional Office

* Redesignated 36 FR 23138.

shown in Appendix D by telephone and telegraph of any incident involving byproduct, source or special nuclear material possessed by him and which may have caused or threatens to cause:

(1) Exposure of the whole body of any individual to 25 rems or more of radiation; exposure of the skin of the whole body of any individual of 150 rems or more of radiation; or exposure of the feet, ankles, hands or forearms of any individual to 375 rems or more of radiation; or

(2) The release of radioactive material in concentrations which, if averaged over a period of 24 hours, would exceed 5,000 times the limits specified for such materials in Appendix B, Table II; or

(3) A loss of one working week or more of the operation of any facilities affected; or

(4) Damage to property in excess of $100,000.

(b) *Twenty-four hour notification.* Each licensee shall within 24 hours notify the Director of the appropriate Nuclear Regulatory Commission Inspection and Enforcement Regional Office listed in Appendix D

by telephone and telegraph of any incident involving licensed material possessed by him and which may have caused or threatens to cause:

(1) Exposure of the whole body of any individual to 5 rems or more of radiation; exposure of the skin of the whole body of any individual to 30 rems or more of radiation; or exposure of the feet, ankles, hands, or forearms to 75 rems or more of radiation; or

(2) The release of radioactive material in concentrations which, if averaged over a period of 24 hours, would exceed 500 times the limits specified for such materials in Appendix B, Table II; or

(3) A loss of one day or more of the operation of any facilities affected; or

(4) Damage to property in excess of $1,000.

(c) Any report filed with the Commission pursuant to this section shall be prepared so that names of individuals who have received exposure to radiation will be stated in a separate part of the report.

§ 20.404 ‡

§ 20.405 Reports of overexposures and excessive levels and concentrations.

(a) In addition to any notification required by § 20.403, each licensee shall make a report in writing within 30 days to the Director of Inspection and Enforcement, U.S. Nuclear Regulatory Commission, Washington, D.C. 20555, with a copy to the appropriate Nuclear Regulatory Commission Inspection and Enforcement Regional Office listed in Appendix D,

of (1) each exposure of an individual to radiation or concentrations of radioactive material in excess of any applicable limit in this part or in the licensee's license; (2) any incident for which notification is required by § 20.403; and (3) levels of radiation or concentrations of radioactive material (not involving excessive exposure of any individual) in an unrestricted area in excess of ten times any applicable limit set forth in this part or in the licensee's license.

Each report required under this paragraph shall describe the extent of exposure of persons to radiation or to radioactive material, including estimates of each individual's exposure as required by paragraph (b) of this section; levels of radiation and concentrations of radioactive material involved; the cause of the exposure, levels or concentrations; and corrective steps taken or planned to assure against a recurrence.

(b) Any report filed with the Commission pursuant to this section shall include for each individual exposed the name, social security number, and date of birth; and an estimate of the individual's exposure. The report shall be prepared so that this information is stated in a separate part of the report.

(c) †

§ 20.406 †

§ 20.407 Personnel exposure and monitoring reports.

(a) This section applies to each person licensed by the Commission or the Atomic Energy Commission to:

(1) Operate a nuclear reactor designed to produce electrical or heat energy pursuant to § 50.21(b) or § 50.22 of this chapter or a testing facility as defined in § 50.2(r) of this chapter;

(2) Possess or use byproduct material for purposes of radiography pursuant to Parts 30 and 34 of this chapter;

(3) Possess or use at any one time, for purposes of fuel processing fabrication, or reprocessing, special nuclear material in a quantity exceeding 5,000 grams of contained uranium-235, uranium-233, or plutonium, or any combination thereof pursuant to Part 70 of this chapter; or

(4) Possess or use at any one time, for processing or manufacturing for distribution pursuant to Part 30, 32, or 33 of this chapter, byproduct material in quantities exceeding anyone of the following quantities:

Radionuclide [1]	*Quantity in curies*
Cesium-137	1
Cobalt-60	1
Gold-198	100
Iodine-131	1
Iridium-192	10
Krypton-85	1,000
Promethium-147	10
Technetium-99m	1,000

(b) Each person described in paragraph (a) of this section shall, within the first quarter of each calendar year, submit to the Executive Director for Operations, U.S. Nuclear Regulatory Commission, Washington, D.C. 20555, the following reports, applicable to the described licensed activities covering the preceding calendar year: *

(1) A report of either (i) the total number of individuals for whom personnel monitoring was required under §§ 20.202(a) or 34.33(a) of this chapter during the calendar year, or (ii) the total number of individuals for whom personnel monitoring was provided during the calendar year; *Provided*, that such total includes at least the number of individuals required to be reported under paragraph (b)(1)(i) of this section. The report shall indicate whether it is submitted in accordance with paragraph (b)(1)(i) or (ii) of this section.

(2) A statistical summary report of the personnel monitoring information recorded by the licensee for individuals for whom personnel monitoring was either required or provided, as described in § 20.407(b)(1), indicating the number of individuals whose total whole body exposure recorded during the previous calendar year was in each of the following estimated exposure ranges:

Estimated Whole Body Exposure Range (Rems) [2]	*Number of individuals in each range*
No measurable exposure	
Measurable exposure less than 0.1	
0.1 to 0.25	
0.25 to 0.5	
0.5 to 0.75	
0.75 to 1	
1 to 2	
2 to 3	
3 to 4	
4 to 5	
5 to 6	
6 to 7	
7 to 8	
8 to 9	
9 to 10	
10 to 11	
11 to 12	
12+	

The low exposure range data are required in order to obtain better information about the exposures actually recorded. This section does not require improved measurements.

§ 20.408 Reports of personnel exposure on termination of employment or work.

When an individual terminates employment with a licensee subject to § 20.407, or an individual assigned to work in such a licensee's facility, but not employed by the licensee, completes his work assignment in the licensee's facility, the licensee shall furnish * to the Executive Director for Operations, U.S. Nuclear Regulatory Commission, Washington, D.C. 20555, a report of the individual's exposure to radiation and radioactive material, incurred during the

‡ Deleted 38 FR 22220.

[1] The Commission may require, as a license condition, or by rule, regulation or order pursuant to § 20.502, reports from licensees who are licensed to use radionuclides not on this list, in quantities sufficient to cause comparable radiation levels.

† Deleted 38 FR 22220.

[2] A licensee whose license expires or terminates prior to, or on the last day of the calendar year, shall submit reports at the expiration or termination of the license, covering that part of the year during which the license was in effect.

* Individual values exactly equal to the values separating Exposure Ranges shall be reported in the higher range.

* Amended 38 FR 22220.

34 FR 5264

period of employment or work assignment in the licensee's facility, containing information recorded by the licensee pursuant to §§ 20.401(a) and 20.108. Such report shall be furnished within 30 days after the exposure of the individual has been determined by the licensee or 90 days after the date of termination of employment or work assignment, whichever is earlier.

38 FR 22220

§ 20.409 Notifications and reports to individuals.

(a) Requirements for notifications and reports to individuals of exposure to radiation or radioactive material are specified in § 19.13 of this chapter.

(b) When a licensee is required pursuant to §§ 20.405 or 20.408 to report to the Commission any exposure of an individual to radiation or radioactive material, the licensee shall also notify the individual. Such notice shall be transmitted at a time not later than the transmittal to the Commission, and shall comply with the provisions of § 19.13(a) of this chapter.

25 FR 10914

EXCEPTIONS AND ADDITIONAL REQUIREMENTS

§ 20.501 Applications for exemptions.

The Commission may, upon application by any licensee or upon its own initiative, grant such exemptions from the requirements of the regulations in this part as it determines are authorized by law and will not result in undue hazard to life or property.

§ 20.502 Additional requirements.

The Commission may, by rule, regulation, or order, impose upon any licensee such requirements, in addition to those established in the regulations in this part, as it deems appropriate or necessary to protect health or to minimize danger to life or property.

40 FR 8774

§ 20.601 Violations.

An injunction or other court order may be obtained prohibiting any violation of any provision of the Atomic Energy Act of 1954, as amended, or Title II of the Energy Reorganization Act of 1974, or any regulation or order issued thereunder. A court order may be obtained for the payment of a civil penalty imposed pursuant to section 234 of the Act for violation of section 53, 57, 62, 63, 81, 82, 101, 103, 104, 107, or 109 of the Act, or section 206 of the Energy Reorganization Act of 1974, or any rule, regulation, or order issued thereunder, or any term, condition, or limitation of any license issued thereunder, or for any violation for which a license may be revoked under section 186 of the Act. Any person who willfully violates any provision of the Act or any regulation or order issued thereunder may be guilty of a crime and, upon conviction, may be punished by fine or imprisonment or both, as provided by law.

NOTE.—The reporting and record keeping requirements contained in this part have been approved by the General Accounting Office under B-180225 (R0043), (R0044), and (R0084).

APPENDIX A [Reserved]

APPENDIX B

Concentrations in Air and Water Above Natural Background

(See footnotes on page 20-15)

Element (atomic number)	Isotope [1]	†	Table I Column 1 Air (μCi/ml)	Table I Column 2 Water (μCi/ml)	Table II Column 1 Air (μCi/ml)	Table II Column 2 Water (μCi/ml)
Actinium (89)	Ac 227	S	2×10^{-12}	6×10^{-5}	8×10^{-14}	2×10^{-6}
		I	3×10^{-11}	9×10^{-3}	9×10^{-13}	3×10^{-4}
	Ac 228	S	8×10^{-8}	3×10^{-3}	3×10^{-9}	9×10^{-5}
		I	2×10^{-8}	3×10^{-3}	6×10^{-10}	9×10^{-5}
Americium (95)	Am 241	S	6×10^{-12}	1×10^{-4}	2×10^{-13}	4×10^{-6}
		* I	1×10^{-10}	8×10^{-4}	4×10^{-12}	3×10^{-5}
	Am 242m	S	6×10^{-12}	1×10^{-4}	2×10^{-13}	4×10^{-6}
		I	3×10^{-10}	3×10^{-3}	9×10^{-12}	9×10^{-5}
	Am 242	S	4×10^{-8}	4×10^{-3}	1×10^{-9}	1×10^{-4}
		I	5×10^{-8}	4×10^{-3}	2×10^{-9}	1×10^{-4}
	Am 243	S	6×10^{-12}	1×10^{-4}	2×10^{-13}	4×10^{-6}
		I	1×10^{-10}	8×10^{-4}	4×10^{-12}	3×10^{-5}
	Am 244	S	4×10^{-6}	1×10^{-1}	1×10^{-7}	5×10^{-3}
		I	2×10^{-5}	1×10^{-1}	8×10^{-7}	5×10^{-3}
Antimony (51)	Sb 122	S	2×10^{-7}	8×10^{-4}	6×10^{-9}	3×10^{-5}
		I	1×10^{-7}	8×10^{-4}	5×10^{-9}	3×10^{-5}
	Sb 124	S	2×10^{-7}	7×10^{-4}	5×10^{-9}	2×10^{-5}
		I	2×10^{-8}	7×10^{-4}	7×10^{-10}	2×10^{-5}
	Sb 125	S	5×10^{-7}	3×10^{-3}	2×10^{-8}	1×10^{-4}
		I	3×10^{-8}	3×10^{-3}	9×10^{-10}	1×10^{-4}
Argon (18)	A 37	Sub[2]	6×10^{-3}		1×10^{-4}	
	A 41	Sub	2×10^{-6}		4×10^{-8}	
Arsenic (33)	As 73	S	2×10^{-6}	1×10^{-2}	7×10^{-8}	5×10^{-4}
		I	4×10^{-7}	1×10^{-2}	1×10^{-8}	5×10^{-4}
	As 74	S	3×10^{-7}	2×10^{-3}	1×10^{-8}	5×10^{-5}
		I	1×10^{-7}	2×10^{-3}	4×10^{-9}	5×10^{-5}
	As 76	S	1×10^{-7}	6×10^{-4}	4×10^{-9}	2×10^{-5}
		I	1×10^{-7}	6×10^{-4}	3×10^{-9}	2×10^{-5}
	As 77	S	5×10^{-7}	2×10^{-3}	2×10^{-8}	8×10^{-5}
		I	4×10^{-7}	2×10^{-3}	1×10^{-8}	8×10^{-5}
Astatine (85)	At 211	S	7×10^{-9}	5×10^{-5}	2×10^{-10}	2×10^{-6}
		I	3×10^{-8}	2×10^{-3}	1×10^{-9}	7×10^{-5}
Barium (56)	Ba 131	S	1×10^{-6}	5×10^{-3}	4×10^{-8}	2×10^{-4}
		I	4×10^{-7}	5×10^{-3}	1×10^{-8}	2×10^{-4}
	Ba 140	S	1×10^{-7}	8×10^{-4}	4×10^{-9}	3×10^{-5}
		I	4×10^{-8}	7×10^{-4}	1×10^{-9}	2×10^{-5}
Berkelium (97)	Bk 249	S	9×10^{-10}	2×10^{-2}	3×10^{-11}	6×10^{-4}
		I	1×10^{-7}	2×10^{-2}	4×10^{-9}	6×10^{-4}
	Bk 250	S	1×10^{-7}	6×10^{-3}	5×10^{-9}	2×10^{-4}
		I	1×10^{-6}	6×10^{-3}	4×10^{-8}	2×10^{-4}
Beryllium (4)	Be 7	S	6×10^{-6}	5×10^{-2}	2×10^{-7}	2×10^{-3}
		I	1×10^{-6}	5×10^{-2}	4×10^{-8}	2×10^{-3}
Bismuth (83)	Bi 206	S	2×10^{-7}	1×10^{-3}	6×10^{-9}	4×10^{-5}
		I	1×10^{-7}	1×10^{-3}	5×10^{-9}	4×10^{-5}
	Bi 207	S	2×10^{-7}	2×10^{-3}	6×10^{-9}	6×10^{-5}
		I	1×10^{-8}	2×10^{-3}	5×10^{-10}	6×10^{-5}
	Bi 210	S	6×10^{-9}	1×10^{-3}	2×10^{-10}	4×10^{-5}
		I	6×10^{-9}	1×10^{-3}	2×10^{-10}	4×10^{-5}
	Bi 212	S	1×10^{-7}	1×10^{-2}	3×10^{-9}	4×10^{-4}
		I	2×10^{-7}	1×10^{-2}	7×10^{-9}	4×10^{-4}

25 FR 10914

APPENDIX B

Concentrations in Air and Water Above Natural Background—Continued

(See footnotes on page 20-15)

Element (atomic number)	Isotope [1]	†	Table I Column 1 Air (μCi/ml)	Table I Column 2 Water (μCi/ml)	Table II Column 1 Air (μCi/ml)	Table II Column 2 Water (μCi/ml)
Bromine (35)	Br 82	S	1×10^{-6}	8×10^{-3}	4×10^{-8}	3×10^{-4}
		I	2×10^{-7}	1×10^{-3}	6×10^{-9}	4×10^{-5}
Cadmium (48)	Cd 109	S	5×10^{-8}	5×10^{-3}	2×10^{-9}	2×10^{-4}
		I	7×10^{-8}	5×10^{-3}	3×10^{-9}	2×10^{-4}
	Cd 115m	S	4×10^{-8}	7×10^{-4}	1×10^{-9}	3×10^{-5}
		I	4×10^{-8}	7×10^{-4}	1×10^{-9}	3×10^{-5}
	Cd 115	S	2×10^{-7}	1×10^{-3}	8×10^{-9}	3×10^{-5}
		I	2×10^{-7}	1×10^{-3}	6×10^{-9}	4×10^{-5}
Calcium (20)	Ca 45	S	3×10^{-8}	3×10^{-4}	1×10^{-9}	9×10^{-6}
		I	1×10^{-7}	5×10^{-3}	4×10^{-9}	2×10^{-4}
	Ca 47	S	2×10^{-7}	1×10^{-3}	6×10^{-9}	5×10^{-5}
		I	2×10^{-7}	1×10^{-3}	6×10^{-9}	3×10^{-5}
Californium (98)	Cf 249	S	2×10^{-12}	1×10^{-4}	5×10^{-14}	4×10^{-6}
		I	1×10^{-10}	7×10^{-4}	3×10^{-12}	2×10^{-5}
	Cf 250	S	5×10^{-12}	4×10^{-4}	2×10^{-13}	1×10^{-5}
		I	1×10^{-10}	7×10^{-4}	3×10^{-12}	3×10^{-5}
	Cf 251	S	2×10^{-12}	1×10^{-4}	6×10^{-14}	4×10^{-6}
		I	1×10^{-10}	8×10^{-4}	3×10^{-12}	3×10^{-5}
	Cf 252	** S	6×10^{-12}	2×10^{-4}	2×10^{-13}	7×10^{-6}
		** I	3×10^{-11}	2×10^{-4}	1×10^{-12}	7×10^{-6}
	Cf 253	S	8×10^{-10}	4×10^{-3}	3×10^{-11}	1×10^{-4}
		I	8×10^{-10}	4×10^{-3}	3×10^{-11}	1×10^{-4}
	Cf 254	S	5×10^{-12}	4×10^{-6}	2×10^{-13}	1×10^{-7}
		I	5×10^{-12}	4×10^{-6}	2×10^{-13}	1×10^{-7}
Carbon (6)	C 14	S	4×10^{-6}	2×10^{-2}	1×10^{-7}	8×10^{-4}
	(CO_2)	Sub	5×10^{-5}		1×10^{-6}	
Cerium (58)	Ce 141	S	4×10^{-7}	3×10^{-3}	2×10^{-8}	9×10^{-5}
		I	2×10^{-7}	3×10^{-3}	5×10^{-9}	9×10^{-5}
	Ce 143	S	3×10^{-7}	1×10^{-3}	9×10^{-9}	4×10^{-5}
		I	2×10^{-7}	1×10^{-3}	7×10^{-9}	4×10^{-5}
	Ce 144	S	1×10^{-8}	3×10^{-4}	3×10^{-10}	1×10^{-5}
		I	6×10^{-9}	3×10^{-4}	2×10^{-10}	1×10^{-5}
Cesium (55)	Cs 131	S	1×10^{-5}	7×10^{-2}	4×10^{-7}	2×10^{-3}
		I	3×10^{-6}	3×10^{-2}	1×10^{-7}	9×10^{-4}
	Cs 134m	S	4×10^{-5}	2×10^{-1}	1×10^{-6}	6×10^{-3}
		I	6×10^{-6}	3×10^{-2}	2×10^{-7}	1×10^{-3}
	Cs 134	S	4×10^{-8}	3×10^{-4}	1×10^{-9}	9×10^{-6}
		I	1×10^{-8}	1×10^{-3}	4×10^{-10}	4×10^{-5}
	Cs 135	S	5×10^{-7}	3×10^{-3}	2×10^{-8}	1×10^{-4}
		I	9×10^{-8}	7×10^{-3}	3×10^{-9}	2×10^{-4}
	Cs 136	S	4×10^{-7}	2×10^{-3}	1×10^{-8}	9×10^{-5}
		I	2×10^{-7}	2×10^{-3}	6×10^{-9}	6×10^{-5}
	Cs 137	S	6×10^{-8}	4×10^{-4}	2×10^{-9}	2×10^{-5}
		I	1×10^{-8}	1×10^{-3}	5×10^{-10}	4×10^{-5}
Chlorine (17)	Cl 36	S	4×10^{-7}	2×10^{-3}	1×10^{-8}	8×10^{-5}
		I	2×10^{-8}	2×10^{-3}	8×10^{-10}	6×10^{-5}
	Cl 38	S	3×10^{-6}	1×10^{-2}	9×10^{-8}	4×10^{-4}
		I	2×10^{-6}	1×10^{-2}	7×10^{-8}	4×10^{-4}
Chromium (24)	Cr 51	S	1×10^{-5}	5×10^{-2}	4×10^{-7}	2×10^{-3}
		I	2×10^{-6}	5×10^{-2}	8×10^{-8}	2×10^{-3}

25 FR 10914

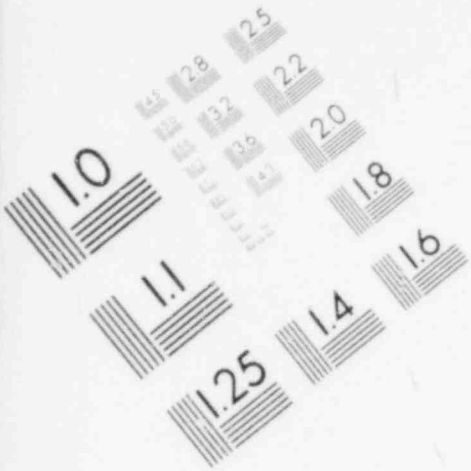

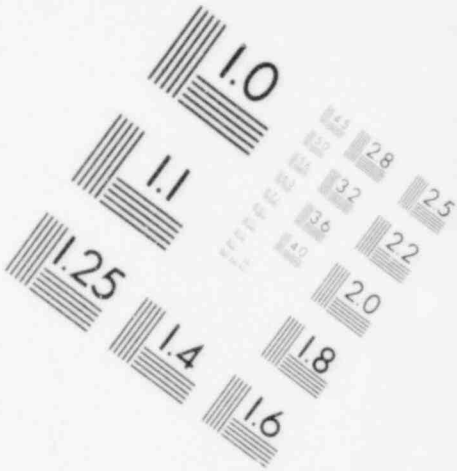

IMAGE EVALUATION
TEST TARGET (MT-3)

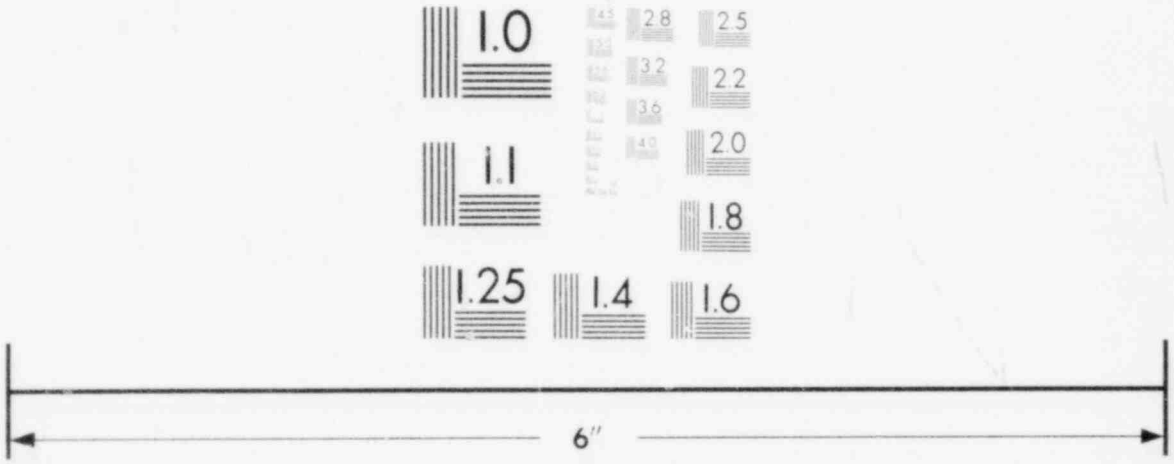

MICROCOPY RESOLUTION TEST CHART

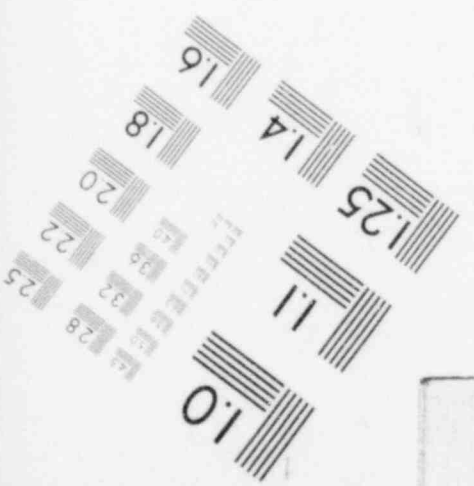

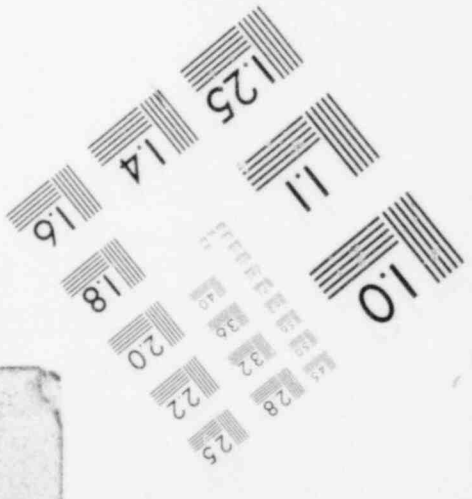

APPENDIX B

Concentrations In Air and Water Above Natural Background—Continued

(See footnotes on page 20-15)

Element (atomic number)	Isotope [1]	†	Table I Column 1 Air (μCi/ml)	Table I Column 2 Water (μCi/ml)	Table II Column 1 Air (μCi/ml)	Table II Column 2 Water (μCi/ml)
Cobalt (27)	Co 57	S	3×10^{-6}	2×10^{-2}	1×10^{-7}	5×10^{-4}
		I	2×10^{-7}	1×10^{-3}	6×10^{-9}	4×10^{-4}
	Co 58m	S	2×10^{-5}	8×10^{-2}	6×10^{-7}	3×10^{-3}
		I	9×10^{-6}	6×10^{-2}	3×10^{-7}	2×10^{-3}
	Co 58	S	8×10^{-7}	4×10^{-3}	3×10^{-8}	1×10^{-4}
		I	5×10^{-8}	3×10^{-3}	2×10^{-9}	9×10^{-5}
	Co 60	S	3×10^{-7}	1×10^{-3}	1×10^{-8}	5×10^{-5}
		I	9×10^{-9}	1×10^{-3}	3×10^{-10}	3×10^{-5}
Copper (29)	Cu 64	S	2×10^{-6}	1×10^{-2}	7×10^{-8}	3×10^{-4}
		I	1×10^{-6}	6×10^{-3}	4×10^{-8}	2×10^{-4}
Curium (96)	Cm 242	S	1×10^{-10}	7×10^{-4}	4×10^{-12}	2×10^{-5}
		* I	2×10^{-10}	7×10^{-4}	6×10^{-12}	2×10^{-5}
	Cm 243	S	6×10^{-12}	1×10^{-4}	2×10^{-13}	5×10^{-6}
		I	1×10^{-10}	7×10^{-4}	3×10^{-12}	2×10^{-5}
	Cm 244	S	9×10^{-12}	2×10^{-4}	3×10^{-13}	7×10^{-6}
		I	1×10^{-10}	8×10^{-4}	3×10^{-12}	3×10^{-5}
	Cm 245	S	5×10^{-12}	1×10^{-4}	2×10^{-13}	4×10^{-6}
		I	1×10^{-10}	8×10^{-4}	4×10^{-12}	3×10^{-5}
	Cm 246	S	5×10^{-12}	1×10^{-4}	2×10^{-13}	4×10^{-6}
		I	1×10^{-10}	8×10^{-4}	4×10^{-12}	3×10^{-5}
	Cm 247	S	5×10^{-12}	1×10^{-4}	2×10^{-13}	4×10^{-6}
		I	1×10^{-10}	6×10^{-4}	4×10^{-12}	2×10^{-5}
	Cm 248	S	6×10^{-12}	1×10^{-3}	2×10^{-13}	4×10^{-7}
		I	1×10^{-11}	4×10^{-3}	4×10^{-13}	1×10^{-6}
	Cm 249	S	1×10^{-5}	6×10^{-2}	4×10^{-7}	2×10^{-3}
		I	1×10^{-5}	6×10^{-2}	4×10^{-7}	2×10^{-3}
Dysprosium (66)	Dy 165	S	3×10^{-6}	1×10^{-2}	9×10^{-8}	4×10^{-4}
		I	2×10^{-6}	1×10^{-2}	7×10^{-8}	4×10^{-4}
	Dy 166	S	2×10^{-7}	1×10^{-3}	8×10^{-9}	4×10^{-5}
		I	2×10^{-7}	1×10^{-3}	7×10^{-9}	4×10^{-5}
Einsteinium (99)	Es 253	S	8×10^{-10}	7×10^{-4}	3×10^{-11}	2×10^{-5}
		I	6×10^{-10}	7×10^{-4}	2×10^{-11}	2×10^{-5}
	Es 254m	S	5×10^{-9}	5×10^{-4}	2×10^{-10}	2×10^{-5}
		I	5×10^{-9}	5×10^{-4}	2×10^{-10}	2×10^{-5}
	Es 254	S	2×10^{-11}	4×10^{-4}	6×10^{-13}	1×10^{-5}
		I	1×10^{-10}	4×10^{-4}	4×10^{-12}	1×10^{-5}
	Es 255	S	5×10^{-10}	8×10^{-4}	2×10^{-11}	3×10^{-5}
		I	4×10^{-10}	8×10^{-4}	1×10^{-11}	3×10^{-5}
Erbium (68)	Er 169	S	6×10^{-7}	3×10^{-3}	2×10^{-8}	9×10^{-5}
		I	4×10^{-7}	3×10^{-3}	1×10^{-8}	9×10^{-5}
	Er 171	S	7×10^{-7}	3×10^{-3}	2×10^{-8}	1×10^{-4}
		I	6×10^{-7}	3×10^{-3}	2×10^{-8}	1×10^{-4}
Europium (63)	Eu 152	S	4×10^{-7}	2×10^{-3}	1×10^{-8}	6×10^{-5}
	(T/2 = 9.2 hrs)	I	3×10^{-7}	2×10^{-3}	1×10^{-8}	6×10^{-5}
	Eu 152	S	1×10^{-8}	2×10^{-3}	4×10^{-10}	6×10^{-5}
	(T/2 = 13 yrs)	I	2×10^{-8}	2×10^{-3}	6×10^{-10}	6×10^{-5}
	Eu 154	S	4×10^{-9}	6×10^{-4}	1×10^{-10}	2×10^{-5}
		I	7×10^{-9}	6×10^{-4}	2×10^{-10}	2×10^{-5}
	Eu 155	S	9×10^{-8}	6×10^{-3}	3×10^{-9}	2×10^{-4}
		I	7×10^{-8}	6×10^{-3}	3×10^{-9}	2×10^{-4}

APPENDIX B

Concentrations In Air and Water Above Natural Background—Continued

(See footnotes on page 20-15)

Element (atomic number)	Isotope [1]	†	Table I Column 1 Air (μCi/ml)	Table I Column 2 Water (μCi/ml)	Table II Column 1 Air (μCi/ml)	Table II Column 2 Water (μCi/ml)
Fermium (100)	Fm 254	S	6×10^{-8}	4×10^{-3}	2×10^{-9}	1×10^{-4}
		I	7×10^{-8}	4×10^{-3}	2×10^{-9}	1×10^{-4}
	Fm 255	S	2×10^{-8}	1×10^{-3}	6×10^{-10}	3×10^{-5}
		I	1×10^{-8}	1×10^{-3}	4×10^{-10}	3×10^{-5}
	Fm 256	S	3×10^{-9}	3×10^{-3}	1×10^{-10}	9×10^{-5}
		I	2×10^{-9}	3×10^{-3}	6×10^{-11}	9×10^{-5}
Fluorine (9)	F 18	S	5×10^{-6}	2×10^{-2}	2×10^{-7}	8×10^{-4}
		I	3×10^{-6}	1×10^{-2}	9×10^{-8}	5×10^{-4}
Gadolinium (64)	Gd 153	S	2×10^{-7}	6×10^{-3}	8×10^{-9}	2×10^{-4}
		I	9×10^{-8}	6×10^{-3}	3×10^{-9}	2×10^{-4}
	Gd 159	S	5×10^{-7}	2×10^{-2}	2×10^{-8}	8×10^{-5}
		I	4×10^{-7}	2×10^{-2}	1×10^{-8}	8×10^{-5}
Gallium (31)	Ga 72	S	2×10^{-7}	1×10^{-2}	8×10^{-9}	4×10^{-5}
		I	2×10^{-7}	1×10^{-2}	6×10^{-9}	4×10^{-5}
Germanium (32)	Ge 71	S	1×10^{-5}	5×10^{-2}	4×10^{-7}	2×10^{-3}
		I	6×10^{-6}	5×10^{-2}	2×10^{-7}	2×10^{-3}
Gold (79)	Au 196	S	1×10^{-6}	5×10^{-3}	4×10^{-8}	2×10^{-4}
		I	6×10^{-7}	4×10^{-3}	2×10^{-8}	1×10^{-4}
	Au 198	S	3×10^{-7}	2×10^{-3}	1×10^{-8}	5×10^{-5}
		I	2×10^{-7}	1×10^{-3}	8×10^{-9}	5×10^{-5}
	Au 199	S	1×10^{-6}	5×10^{-3}	4×10^{-8}	2×10^{-4}
		I	8×10^{-7}	4×10^{-3}	3×10^{-8}	2×10^{-4}
Hafnium (72)	Hf 181	S	4×10^{-8}	2×10^{-3}	1×10^{-9}	7×10^{-5}
		I	7×10^{-8}	2×10^{-3}	3×10^{-9}	7×10^{-5}
Holmium (67)	Ho 166	S	2×10^{-7}	9×10^{-4}	7×10^{-9}	3×10^{-5}
		I	2×10^{-7}	9×10^{-4}	6×10^{-9}	3×10^{-5}
Hydrogen (1)	H3	S	5×10^{-6}	1×10^{-1}	2×10^{-7}	3×10^{-3}
		I	5×10^{-6}	1×10^{-1}	2×10^{-7}	3×10^{-3}
		Sub	2×10^{-5}	.....	4×10^{-7}	.....
Indium (49)	In 113m	S	8×10^{-6}	4×10^{-2}	3×10^{-7}	1×10^{-3}
		I	7×10^{-6}	4×10^{-2}	2×10^{-7}	1×10^{-3}
	In 114m	S	1×10^{-7}	5×10^{-4}	4×10^{-9}	2×10^{-5}
		I	2×10^{-8}	5×10^{-4}	7×10^{-10}	2×10^{-5}
	In 115m	S	2×10^{-6}	1×10^{-2}	8×10^{-8}	4×10^{-4}
		I	2×10^{-6}	1×10^{-2}	6×10^{-8}	4×10^{-4}
	In 115	S	2×10^{-7}	3×10^{-2}	9×10^{-9}	9×10^{-5}
		I	3×10^{-8}	3×10^{-2}	1×10^{-9}	9×10^{-5}
Iodine (53)	I 125	S	5×10^{-9}	4×10^{-3}	8×10^{-11}	2×10^{-7}
		I	2×10^{-7}	6×10^{-3}	6×10^{-9}	2×10^{-4}
	I 126	S	8×10^{-9}	5×10^{-3}	9×10^{-11}	3×10^{-7}
		I	3×10^{-7}	3×10^{-3}	1×10^{-8}	9×10^{-5}
	I 129	S	2×10^{-9}	1×10^{-3}	2×10^{-11}	6×10^{-6}
		I	7×10^{-8}	6×10^{-3}	2×10^{-9}	2×10^{-4}
	I 131	S	9×10^{-9}	6×10^{-3}	1×10^{-10}	3×10^{-7}
		I	3×10^{-7}	2×10^{-3}	1×10^{-8}	6×10^{-5}
	I 132	S	2×10^{-7}	2×10^{-3}	3×10^{-9}	8×10^{-5}
		I	9×10^{-7}	5×10^{-3}	3×10^{-8}	2×10^{-4}
	I 133	S	3×10^{-8}	2×10^{-4}	4×10^{-10}	1×10^{-6}
		I	2×10^{-7}	1×10^{-3}	7×10^{-9}	4×10^{-5}
	I 134	S	[illegible]	[illegible]	[illegible]	[illegible]

APPENDIX B

Concentrations in Air and Water Above Natural Background—Continued

(See footnotes on page 20-15)

Element (atomic number)	Isotope [1]	†	Table I Column 1 Air (μCi/ml)	Table I Column 2 Water (μCi/ml)	Table II Column 1 Air (μCi/ml)	Table II Column 2 Water (μCi/ml)
Iodine (53)	I 134	I	3×10^{-6}	2×10^{-3}	1×10^{-7}	6×10^{-4}
	I 135	S	1×10^{-7}	7×10^{-4}	1×10^{-8}	4×10^{-4}
		I	4×10^{-7}	2×10^{-3}	1×10^{-8}	7×10^{-3}
Iridium (77)	Ir 190	S	1×10^{-6}	6×10^{-3}	4×10^{-8}	2×10^{-4}
		I	4×10^{-7}	5×10^{-3}	1×10^{-8}	2×10^{-4}
	Ir 192	S	1×10^{-7}	1×10^{-3}	4×10^{-9}	4×10^{-3}
		I	3×10^{-8}	1×10^{-3}	9×10^{-10}	4×10^{-3}
	Ir 194	S	2×10^{-7}	1×10^{-3}	8×10^{-9}	3×10^{-3}
		I	2×10^{-7}	9×10^{-4}	5×10^{-9}	3×10^{-3}
Iron (26)	Fe 55	S	9×10^{-7}	2×10^{-2}	3×10^{-8}	8×10^{-4}
		I	1×10^{-6}	7×10^{-3}	3×10^{-8}	2×10^{-3}
	Fe 59	S	1×10^{-7}	2×10^{-3}	5×10^{-9}	6×10^{-3}
		I	5×10^{-8}	2×10^{-3}	2×10^{-9}	5×10^{-3}
Krypton (36)	Kr 85m	Sub	6×10^{-6}	.....	1×10^{-7}	.....
	Kr 85	Sub	1×10^{-5}	.....	3×10^{-7}	.....
	Kr 87	Sub	1×10^{-6}	.....	2×10^{-8}	.....
	Kr 88	Sub	1×10^{-6}	.....	2×10^{-8}	.....
Lanthanum (57)	La 140	S	2×10^{-7}	7×10^{-4}	5×10^{-9}	2×10^{-3}
		I	1×10^{-7}	7×10^{-4}	4×10^{-9}	2×10^{-3}
Lead (82)	Pb 203	S	3×10^{-6}	1×10^{-2}	9×10^{-8}	4×10^{-4}
		I	2×10^{-6}	1×10^{-2}	6×10^{-8}	4×10^{-4}
	Pb 210	S	1×10^{-10}	4×10^{-4}	4×10^{-12}	1×10^{-7}
		I	2×10^{-10}	5×10^{-3}	8×10^{-12}	2×10^{-4}
	Pb 212	S	2×10^{-8}	6×10^{-4}	6×10^{-10}	2×10^{-3}
		I	2×10^{-8}	5×10^{-4}	7×10^{-10}	2×10^{-3}
Lutetium (71)	Lu 177	S	6×10^{-7}	3×10^{-3}	2×10^{-8}	1×10^{-4}
		I	5×10^{-7}	3×10^{-3}	2×10^{-8}	1×10^{-4}
Manganese (25)	Mn 52	S	2×10^{-7}	1×10^{-3}	7×10^{-9}	5×10^{-5}
		I	1×10^{-7}	9×10^{-4}	5×10^{-9}	3×10^{-5}
	Mn 54	* S	4×10^{-7}	4×10^{-3}	1×10^{-8}	1×10^{-4}
		I	4×10^{-8}	3×10^{-3}	1×10^{-9}	1×10^{-4}
	Mn 56	S	8×10^{-7}	4×10^{-3}	3×10^{-8}	1×10^{-4}
		I	5×10^{-7}	3×10^{-3}	2×10^{-8}	1×10^{-4}
Mercury (80)	Hg 197m	S	7×10^{-7}	6×10^{-3}	3×10^{-8}	2×10^{-4}
		I	8×10^{-7}	5×10^{-3}	3×10^{-8}	2×10^{-4}
	Hg 197	S	1×10^{-6}	9×10^{-3}	4×10^{-8}	$3\times$
		I	3×10^{-6}	1×10^{-2}	9×10^{-8}	$5\times$
	Hg 203	S	7×10^{-8}	5×10^{-4}	2×10^{-9}	2×1
		I	1×10^{-7}	3×10^{-3}	4×10^{-9}	1×10^{-4}
Molybdenum (42)	Mo 99	S	7×10^{-7}	5×10^{-3}	3×10^{-8}	2×10^{-4}
		I	2×10^{-7}	1×10^{-3}	7×10^{-9}	4×10^{-5}
Neodymium (60)	Nd 144	S	8×10^{-11}	2×10^{-3}	3×10^{-12}	7×10^{-5}
		I	3×10^{-10}	2×10^{-3}	1×10^{-11}	8×10^{-5}
	Nd 147	S	4×10^{-7}	2×10^{-3}	1×10^{-8}	6×10^{-5}
		I	2×10^{-7}	2×10^{-3}	8×10^{-9}	6×10^{-5}
	Nd 149	S	2×10^{-6}	8×10^{-3}	6×10^{-8}	3×10^{-4}
		I	1×10^{-6}	8×10^{-3}	5×10^{-8}	3×10^{-4}

25 F.R. 10914

APPENDIX B

Concentrations in Air and Water Above Natural Background—Continued

(See footnotes on page 20-15)

Element (atomic number)	Isotope [1]	†	Table I Column 1 Air (μCi/ml)	Table I Column 2 Water (μCi/ml)	Table II Column 1 Air (μCi/ml)	Table II Column 2 Water (μCi/ml)
Neptunium (93)	Np 237	S	4×10^{-12}	9×10^{-5}	1×10^{-13}	3×10^{-6}
		I	1×10^{-10}	9×10^{-4}	4×10^{-12}	3×10^{-5}
	Np 239	S	8×10^{-7}	4×10^{-3}	3×10^{-8}	1×10^{-4}
		I	7×10^{-7}	4×10^{-3}	2×10^{-8}	1×10^{-4}
Nickel (28)	Ni 59	S	5×10^{-7}	6×10^{-3}	2×10^{-8}	2×10^{-4}
		I	8×10^{-7}	6×10^{-3}	3×10^{-8}	2×10^{-4}
	Ni 63	S	6×10^{-8}	8×10^{-4}	2×10^{-9}	3×10^{-5}
		I	3×10^{-7}	2×10^{-3}	1×10^{-8}	7×10^{-4}
	Ni 65	S	9×10^{-7}	4×10^{-3}	3×10^{-8}	1×10^{-4}
		I	5×10^{-7}	3×10^{-3}	2×10^{-8}	1×10^{-4}
Niobium (Columbium) (41)	Nb 93m	S	1×10^{-7}	1×10^{-3}	4×10^{-9}	4×10^{-5}
		I	2×10^{-7}	1×10^{-3}	5×10^{-9}	4×10^{-5}
	Nb 95	S	5×10^{-7}	3×10^{-3}	2×10^{-8}	1×10^{-4}
		I	1×10^{-7}	3×10^{-3}	3×10^{-9}	1×10^{-4}
	Nb 97	S	6×10^{-6}	3×10^{-2}	2×10^{-7}	9×10^{-5}
		I	5×10^{-6}	3×10^{-2}	2×10^{-7}	9×10^{-5}
Osmium (76)	Os 185	S	5×10^{-7}	2×10^{-3}	2×10^{-8}	7×10^{-5}
		I	5×10^{-8}	2×10^{-3}	2×10^{-9}	7×10^{-6}
	Os 191m	S	2×10^{-5}	7×10^{-2}	6×10^{-7}	3×10^{-3}
		I	9×10^{-6}	7×10^{-2}	3×10^{-7}	2×10^{-3}
	Os 191	S	1×10^{-6}	5×10^{-3}	4×10^{-8}	2×10^{-4}
		I	4×10^{-7}	5×10^{-3}	1×10^{-8}	2×10^{-4}
	Os 193	S	4×10^{-7}	2×10^{-3}	1×10^{-8}	6×10^{-5}
		I	3×10^{-7}	2×10^{-3}	9×10^{-9}	5×10
Palladium (46)	Pd 103	S	1×10^{-6}	1×10^{-2}	5×10^{-8}	3×10^{-4}
		I	7×10^{-7}	8×10^{-3}	3×10^{-8}	3×10^{-4}
	Pd 109	S	6×10^{-7}	3×10^{-3}	2×10^{-8}	9×10^{-5}
		I	4×10^{-7}	2×10^{-3}	1×10^{-8}	7×10^{-5}
Phosphorus (15)	P 32	S	7×10^{-8}	5×10^{-4}	2×10^{-9}	2×10^{-5}
		I	8×10^{-8}	7×10^{-4}	3×10^{-9}	2×10^{-5}
Platinum (78)	Pt 191	S	8×10^{-7}	4×10^{-3}	3×10^{-8}	1×10^{-4}
		I	6×10^{-7}	3×10^{-3}	2×10^{-8}	1×10^{-4}
	Pt 193m	S	7×10^{-6}	3×10^{-2}	2×10^{-7}	1×10^{-3}
		I	5×10^{-6}	3×10^{-2}	2×10^{-7}	1×10^{-3}
*	Pt 193	S	1×10^{-6}	3×10^{-2}	4×10^{-8}	9×10^{-4}
		I	3×10^{-7}	3×10^{-2}	1×10^{-8}	2×10^{-4}
	Pt 197m	S	6×10^{-6}	3×10^{-2}	2×10^{-7}	1×10^{-3}
		I	5×10^{-6}	3×10^{-2}	2×10^{-7}	9×10^{-4}
	Pt 197	S	8×10^{-7}	4×10^{-3}	3×10^{-8}	1×10^{-4}
		I	6×10^{-7}	3×10^{-3}	2×10^{-8}	1×10^{-4}
Plutonium (94)	Pu 238	S	2×10^{-12}	1×10^{-4}	7×10^{-14}	5×10^{-6}
		I	3×10^{-11}	8×10^{-4}	1×10^{-12}	3×10^{-5}
	Pu 239	S	2×10^{-12}	1×10^{-4}	6×10^{-14}	5×10^{-6}
		I	4×10^{-11}	8×10^{-4}	1×10^{-12}	3×10^{-5}
	Pu 240	S	2×10^{-12}	1×10^{-4}	6×10^{-14}	5×10^{-6}
		I	4×10^{-11}	8×10^{-4}	1×10^{-12}	3×10^{-5}
	Pu 241	S	9×10^{-11}	7×10^{-3}	3×10^{-12}	2×10^{-4}
		I	4×10^{-9}	4×10^{-2}	1×10^{-10}	1×10^{-3}

25 F.R. 10914

APPENDIX B

Concentrations in Air and Water Above Natural Background—Continued

(See footnotes on page 20-15)

Element (atomic number)	Isotope [1]	†	Table I Column 1 Air (μCi/ml)	Table I Column 2 Water (μCi/ml)	Table II Column 1 Air (μCi/ml)	Table II Column 2 Water (μCi/ml)
Plutonium (94)	Pu 242	S	2×10^{-12}	1×10^{-4}	6×10^{-14}	3×10^{-6}
		I	4×10^{-11}	9×10^{-4}	1×10^{-12}	3×10^{-5}
	Pu 243	S	2×10^{-6}	1×10^{-2}	6×10^{-8}	3×10^{-4}
		I	2×10^{-6}	1×10^{-2}	8×10^{-8}	3×10^{-4}
	Pu 244	S	2×10^{-12}	1×10^{-4}	6×10^{-14}	4×10^{-6}
		I	3×10^{-11}	3×10^{-4}	1×10^{-12}	1×10^{-5}
Polonium (84)	Po 210	S	5×10^{-10}	2×10^{-5}	2×10^{-11}	7×10^{-7}
		I	2×10^{-10}	8×10^{-6}	7×10^{-12}	3×10^{-7}
Potassium (19)	K 42	S	2×10^{-6}	9×10^{-3}	7×10^{-8}	3×10^{-4}
		I	1×10^{-7}	6×10^{-4}	4×10^{-9}	2×10^{-5}
Praseodymium (59)	Pr 142	S	2×10^{-7}	9×10^{-4}	7×10^{-9}	3×10^{-5}
		I	2×10^{-7}	9×10^{-4}	5×10^{-9}	3×10^{-5}
	Pr 143	S	3×10^{-7}	1×10^{-3}	1×10^{-8}	5×10^{-5}
		I	2×10^{-7}	1×10^{-3}	6×10^{-9}	5×10^{-5}
Promethium (61)	Pm 147	S	2×10^{-6}	6×10^{-3}	2×10^{-7}	2×10^{-4}
		I	1×10^{-7}	6×10^{-3}	3×10^{-9}	2×10^{-4}
	Pm 149	S	3×10^{-7}	1×10^{-3}	1×10^{-8}	4×10^{-5}
		I	2×10^{-7}	1×10^{-3}	8×10^{-9}	4×10^{-5}
Protoactinium (91)	Pa 230	S	2×10^{-9}	7×10^{-5}	6×10^{-11}	2×10^{-6}
		I	8×10^{-10}	7×10^{-5}	3×10^{-11}	2×10^{-6}
	Pa 231	S	1×10^{-12}	3×10^{-5}	4×10^{-14}	9×10^{-7}
		I	1×10^{-10}	8×10^{-6}	4×10^{-12}	2×10^{-5}
	Pa 233	S	6×10^{-7}	4×10^{-3}	2×10^{-8}	1×10^{-4}
		I	2×10^{-7}	3×10^{-3}	6×10^{-9}	1×10^{-4}
Radium (88)	Ra 223	S	2×10^{-9}	2×10^{-5}	6×10^{-11}	7×10^{-7}
		I	2×10^{-10}	1×10^{-6}	8×10^{-12}	4×10^{-6}
	Ra 224	S	5×10^{-9}	7×10^{-5}	2×10^{-10}	2×10^{-6}
		I	7×10^{-10}	2×10^{-6}	2×10^{-11}	5×10^{-6}
	Ra 226	S	3×10^{-11}	4×10^{-7}	3×10^{-12}	3×10^{-8}
		I	5×10^{-11}	9×10^{-6}	2×10^{-12}	3×10^{-5}
	Ra 228	S	7×10^{-11}	8×10^{-7}	2×10^{-12}	3×10^{-8}
		I	4×10^{-11}	7×10^{-6}	1×10^{-12}	3×10^{-5}
Radon (86)	Rn 220	S	3×10^{-7}	.....	1×10^{-8}	.....
	Rn 222 [3] ***		3×10^{-8}	.....	3×10^{-9}	.....
Rhenium (75)	Re 183	S	3×10^{-6}	2×10^{-2}	9×10^{-8}	6×10^{-4}
		I	2×10^{-7}	8×10^{-3}	5×10^{-9}	3×10^{-4}
	Re 186	S	6×10^{-7}	3×10^{-3}	2×10^{-8}	9×10^{-5}
		I	2×10^{-7}	1×10^{-3}	8×10^{-9}	5×10^{-5}
	Re 187	S	9×10^{-6}	7×10^{-2}	3×10^{-7}	3×10^{-3}
		I	5×10^{-7}	4×10^{-2}	2×10^{-8}	2×10^{-3}
	Re 188	S	4×10^{-7}	2×10^{-3}	1×10^{-8}	6×10^{-5}
		I	2×10^{-7}	9×10^{-4}	6×10^{-9}	3×10^{-5}
Rhodium (45)	Rh 103m	S	8×10^{-5}	4×10^{-1}	3×10^{-6}	1×10^{-2}
		I	6×10^{-5}	3×10^{-1}	2×10^{-6}	1×10^{-2}
	Rh 105	S	8×10^{-7}	4×10^{-3}	3×10^{-8}	1×10^{-4}
		I	5×10^{-7}	3×10^{-3}	2×10^{-8}	1×10^{-4}
Rubidium (37)	Rb 86	S	3×10^{-7}	2×10^{-3}	1×10^{-8}	7×10^{-5}
		I	7×10^{-8}	3×10^{-4}	2×10^{-9}	2×10^{-5}
	Rb 87	S	5×10^{-7}	3×10^{-3}	2×10^{-8}	1×10^{-4}
		I	7×10^{-8}	5×10^{-3}	2×10^{-9}	2×10^{-4}

25 FR 10914

APPENDIX B

Concentrations in Air and Water Above Natural Background—Continued

(See footnotes on page 20-15)

Element (atomic number)	Isotope [1]	†	Table I Column 1 Air (μCi/ml)	Table I Column 2 Water (μCi/ml)	Table II Column 1 Air (μCi/ml)	Table II Column 2 Water (μCi/ml)
Ruthenium (44)	Ru 97	S	2×10^{-6}	1×10^{-2}	8×10^{-8}	4×10^{-4}
		I	2×10^{-6}	1×10^{-2}	6×10^{-8}	3×10^{-4}
	Ru 103	S	5×10^{-7}	2×10^{-3}	2×10^{-8}	8×10^{-5}
		I	8×10^{-8}	2×10^{-3}	3×10^{-9}	8×10^{-5}
	Ru 105	S	7×10^{-7}	3×10^{-3}	2×10^{-8}	1×10^{-4}
		I	5×10^{-7}	3×10^{-3}	2×10^{-8}	1×10^{-4}
	Ru 106	S	8×10^{-6}	4×10^{-4}	3×10^{-9}	1×10^{-5}
		I	6×10^{-9}	3×10^{-4}	2×10^{-10}	1×10^{-5}
Samarium (62)	Sm 147	S	7×10^{-11}	2×10^{-5}	2×10^{-12}	6×10^{-7}
		I	3×10^{-10}	2×10^{-5}	9×10^{-12}	7×10^{-7}
	Sm 151	S	6×10^{-8}	1×10^{-2}	2×10^{-9}	4×10^{-4}
		I	1×10^{-7}	1×10^{-2}	5×10^{-9}	4×10^{-4}
	Sm 153	S	5×10^{-7}	2×10^{-3}	2×10^{-8}	8×10^{-5}
		I	4×10^{-7}	2×10^{-3}	1×10^{-8}	8×10^{-5}
Scandium (21)	Sc 46	S	2×10^{-7}	1×10^{-3}	8×10^{-9}	4×10^{-5}
		I	2×10^{-8}	1×10^{-3}	8×10^{-10}	4×10^{-5}
	Sc 47	S	6×10^{-7}	3×10^{-3}	2×10^{-8}	9×10^{-5}
		I	5×10^{-7}	3×10^{-3}	2×10^{-8}	9×10^{-5}
	Sc 48	S	2×10^{-7}	8×10^{-4}	6×10^{-9}	3×10^{-5}
		I	1×10^{-7}	8×10^{-4}	[illegible]$\times10^{-9}$	3×10^{-5}
Selenium (34)	Se 75	S	1×10^{-6}	9×10^{-3}	4×10^{-8}	3×10^{-4}
		I	1×10^{-7}	8×10^{-3}	4×10^{-9}	3×10^{-4}
Silicon (14)	Si 31	S	6×10^{-6}	3×10^{-2}	2×10^{-7}	9×10^{-4}
		I	1×10^{-6}	6×10^{-3}	3×10^{-8}	2×10^{-4}
Silver (47)	Ag 105	S	6×10^{-7}	3×10^{-3}	2×10^{-8}	1×10^{-4}
		I	8×10^{-8}	3×10^{-3}	3×10^{-9}	1×10^{-4}
	Ag 110m	S	2×10^{-7}	9×10^{-4}	7×10^{-9}	3×10^{-5}
		I	1×10^{-8}	9×10^{-4}	3×10^{-10}	3×10^{-5}
	Ag 111	S	3×10^{-7}	1×10^{-3}	1×10^{-8}	4×10^{-5}
		I	2×10^{-7}	1×10^{-3}	8×10^{-9}	4×10^{-5}
Sodium (11)	Na 22	S	2×10^{-7}	1×10^{-3}	6×10^{-9}	4×10^{-5}
		I	9×10^{-8}	9×10^{-4}	3×10^{-10}	3×10^{-5}
	Na 24	S	1×10^{-6}	6×10^{-3}	4×10^{-8}	2×10^{-4}
		I	1×10^{-7}	8×10^{-4}	5×10^{-9}	3×10^{-5}
Strontium (38)	Sr 85m	S	4×10^{-5}	2×10^{-1}	1×10^{-6}	7×10^{-3}
		I	3×10^{-5}	2×10^{-1}	1×10^{-6}	7×10^{-3}
	Sr 85	S	2×10^{-7}	3×10^{-3}	8×10^{-9}	1×10^{-4}
		I	1×10^{-7}	5×10^{-3}	4×10^{-9}	2×10^{-4}
	Sr 89	S	3×10^{-8}	3×10^{-4}	3×10^{-10}	3×10^{-6}
		I	4×10^{-8}	8×10^{-4}	1×10^{-9}	3×10^{-5}
	Sr 90	S	1×10^{-9}	1×10^{-5}	3×10^{-11}	3×10^{-7}
		I	5×10^{-9}	1×10^{-5}	2×10^{-10}	4×10^{-7}
	Sr 91	S	4×10^{-7}	2×10^{-3}	2×10^{-8}	7×10^{-5}
		I	3×10^{-7}	1×10^{-3}	9×10^{-9}	5×10^{-5}
	Sr 92	S	4×10^{-7}	2×10^{-3}	2×10^{-8}	7×10^{-5}
		I	3×10^{-7}	2×10^{-3}	1×10^{-8}	6×10^{-5}
Sulfur (16)	S 35	S	3×10^{-7}	2×10^{-3}	9×10^{-9}	6×10^{-5}
		I	3×10^{-7}	8×10^{-4}	9×10^{-9}	3×10^{-5}
Tantalum (73)	Ta 182	S	4×10^{-8}	1×10^{-3}	1×10^{-9}	4×10^{-5}
		I	2×10^{-8}	1×10^{-3}	7×10^{-10}	4×10^{-5}

25 FR 10914

APPENDIX B

Concentrations in Air and Water Above Natural Background—Continued

(See footnotes on page 20-15)

Element (atomic number)	Isotope [1]	†	Table I Column 1 Air (μCi/ml)	Table I Column 2 Water (μCi/ml)	Table II Column 1 Air (μCi/ml)	Table II Column 2 Water (μCi/ml)
Technetium (43)	Tc 96m	S	8×10^{-5}	4×10^{-1}	3×10^{-6}	1×10^{-2}
		I	3×10^{-5}	3×10^{-1}	1×10^{-6}	1×10^{-2}
	Tc 96	S	6×10^{-7}	3×10^{-3}	2×10^{-8}	1×10^{-4}
		I	2×10^{-7}	1×10^{-3}	8×10^{-9}	5×10^{-5}
	Tc 97m	S	2×10^{-6}	1×10^{-2}	8×10^{-8}	4×10^{-4}
		I	2×10^{-7}	5×10^{-3}	5×10^{-9}	2×10^{-4}
	Tc 97	S	1×10^{-5}	5×10^{-2}	4×10^{-7}	2×10^{-3}
		I	3×10^{-7}	2×10^{-2}	1×10^{-8}	8×10^{-4}
	Tc 99m	S	4×10^{-5}	2×10^{-1}	1×10^{-6}	6×10^{-3}
		I	1×10^{-5}	8×10^{-2}	5×10^{-7}	3×10^{-3}
	Tc 99	S	2×10^{-6}	1×10^{-2}	7×10^{-8}	3×10^{-4}
		I	6×10^{-8}	5×10^{-3}	2×10^{-9}	2×10^{-4}
Tellurium (52)	Te 125m	S	4×10^{-7}	5×10^{-3}	1×10^{-8}	2×10^{-4}
		I	1×10^{-7}	3×10^{-3}	4×10^{-9}	1×10^{-4}
	Te 127m	S	1×10^{-7}	2×10^{-3}	5×10^{-9}	4×10^{-5}
		I	4×10^{-8}	2×10^{-3}	1×10^{-9}	5×10^{-5}
	Te 127	S	2×10^{-6}	8×10^{-3}	6×10^{-8}	3×10^{-4}
		I	9×10^{-7}	5×10^{-3}	3×10^{-8}	2×10^{-4}
	Te 129m	S	8×10^{-8}	1×10^{-3}	3×10^{-9}	3×10^{-5}
		I	3×10^{-8}	6×10^{-4}	1×10^{-9}	2×10^{-5}
	Te 129	S	5×10^{-6}	2×10^{-2}	2×10^{-7}	8×10^{-4}
		I	4×10^{-6}	2×10^{-2}	1×10^{-7}	8×10^{-4}
	Te 131m	S	4×10^{-7}	2×10^{-2}	1×10^{-8}	6×10^{-3}
		I	2×10^{-7}	1×10^{-2}	6×10^{-9}	4×10^{-3}
	Te 132	S	2×10^{-7}	9×10^{-4}	7×10^{-9}	3×10^{-3}
		I	1×10^{-7}	6×10^{-4}	4×10^{-9}	2×10^{-3}
Terbium (65)	Tb 160	S	1×10^{-7}	1×10^{-2}	3×10^{-9}	4×10^{-3}
		I	3×10^{-8}	1×10^{-2}	1×10^{-9}	4×10^{-3}
Thallium (81)	Tl 200	S	3×10^{-6}	1×10^{-2}	9×10^{-8}	4×10^{-4}
		I	1×10^{-6}	7×10^{-3}	4×10^{-8}	2×10^{-4}
	Tl 201	S	2×10^{-6}	9×10^{-3}	7×10^{-8}	3×10^{-4}
		I	9×10^{-7}	5×10^{-3}	3×10^{-8}	2×10^{-4}
	Tl 202	S	8×10^{-7}	4×10^{-3}	3×10^{-8}	1×10^{-4}
		I	2×10^{-7}	2×10^{-3}	8×10^{-9}	7×10^{-5}
	Tl 204	S	6×10^{-7}	3×10^{-3}	2×10^{-8}	1×10^{-4}
		I	3×10^{-8}	2×10^{-3}	9×10^{-10}	6×10^{-5}
Thorium (90) •	Th 227	S	3×10^{-10}	5×10^{-4}	1×10^{-11}	2×10^{-5}
		I	2×10^{-10}	5×10^{-4}	6×10^{-12}	2×10^{-5}
	Th 228	S	8×10^{-12}	2×10^{-4}	3×10^{-13}	7×10^{-6}
		I	6×10^{-12}	4×10^{-4}	2×10^{-12}	1×10^{-5}
	Th 230	S	2×10^{-12}	5×10^{-5}	8×10^{-14}	2×10^{-6}
		I	1×10^{-12}	9×10^{-4}	3×10^{-13}	3×10^{-5}
•	Th 231	S	1×10^{-6}	7×10^{-3}	5×10^{-8}	[illegible]
		I	1×10^{-6}	7×10^{-3}	4×10^{-8}	[illegible]
	Th 232	S	3×10^{-11}	5×10^{-5}	1×10^{-12}	[illegible]
		I	3×10^{-11}	1×10^{-3}	1×10^{-12}	[illegible]
**	Th natural	S	6×10^{-11}	6×10^{-5}	2×10^{-12}	2×10^{-5}
		I	6×10^{-11}	6×10^{-4}	2×10^{-12}	2×10^{-5}

25 F.R. 10914

APPENDIX B

Concentrations in Air and Water Above Natural Background—Continued

(See footnotes on page 20-15)

Element (atomic number)	Isotope [1]	†	Table I Column 1 Air (μCi/ml)	Table I Column 2 Water (μCi/ml)	Table II Column 1 Air (μCi/ml)	Table II Column 2 Water (μCi/ml)
Thorium (90)	Th 234	S	6×10^{-6}	3×10^{-4}	2×10^{-7}	2×10^{-3}
		I	3×10^{-6}	3×10^{-4}	1×10^{-7}	2×10^{-3}
Thulium (69)	Tm 170	S	4×10^{-8}	1×10^{-3}	1×10^{-9}	5×10^{-5}
		I	3×10^{-8}	1×10^{-3}	1×10^{-9}	5×10^{-5}
	Tm 171	S	1×10^{-7}	1×10^{-2}	4×10^{-9}	5×10^{-4}
		I	2×10^{-7}	1×10^{-2}	8×10^{-9}	5×10^{-4}
Tin (50)	Sn 113	S	4×10^{-7}	2×10^{-3}	1×10^{-8}	9×10^{-5}
		I	3×10^{-8}	2×10^{-3}	2×10^{-9}	8×10^{-5}
	Sn 125	S	1×10^{-7}	5×10^{-4}	4×10^{-9}	2×10^{-5}
		I	8×10^{-8}	5×10^{-4}	3×10^{-9}	2×10^{-5}
Tungsten (Wolfram) (74)	W 181	S	2×10^{-6}	1×10^{-3}	8×10^{-8}	4×10^{-4}
		I	1×10^{-7}	1×10^{-3}	4×10^{-9}	3×10^{-4}
	W 185	S	8×10^{-7}	4×10^{-3}	3×10^{-8}	1×10^{-4}
		I	1×10^{-7}	3×10^{-3}	4×10^{-9}	1×10^{-4}
	W 187	S	4×10^{-7}	2×10^{-3}	2×10^{-8}	7×10^{-5}
		I	3×10^{-7}	2×10^{-3}	1×10^{-8}	6×10^{-5}
Uranium (92)	U 230	S	3×10^{-10}	1×10^{-4}	1×10^{-11}	5×10^{-6}
		I	1×10^{-10}	1×10^{-4}	4×10^{-12}	5×10^{-6}
	U 232	S	1×10^{-10}	8×10^{-6}	3×10^{-12}	3×10^{-7}
		I	3×10^{-11}	8×10^{-6}	9×10^{-13}	3×10^{-7}
	U 233	S	5×10^{-10}	9×10^{-6}	2×10^{-11}	3×10^{-7}
		I	1×10^{-10}	9×10^{-6}	4×10^{-12}	3×10^{-7}
**	U 234	S[4]	6×10^{-10}	9×10^{-6}	2×10^{-11}	3×10^{-7}
		I	1×10^{-10}	9×10^{-6}	4×10^{-12}	3×10^{-7}
**	U 235	S[4]	5×10^{-10}	8×10^{-6}	2×10^{-11}	3×10^{-7}
		I	1×10^{-10}	8×10^{-6}	4×10^{-12}	3×10^{-7}
	U 236	S	6×10^{-10}	1×10^{-3}	2×10^{-11}	3×10^{-7}
		I	1×10^{-10}	1×10^{-3}	4×10^{-12}	3×10^{-7}
**	U 238	S[4]	7×10^{-11}	1×10^{-3}	3×10^{-12}	4×10^{-7}
		I	1×10^{-10}	1×10^{-3}	5×10^{-12}	4×10^{-7}
	U 240	S	2×10^{-7}	1×10^{-3}	8×10^{-9}	3×10^{-5}
		I	2×10^{-7}	1×10^{-3}	6×10^{-9}	3×10^{-5}
**	U-natural	S[4]	1×10^{-10}	1×10^{-3}	3×10^{-12}	3×10^{-7}
		I	1×10^{-10}	1×10^{-3}	5×10^{-12}	3×10^{-7}
Vanadium (23)	V 48	S	2×10^{-7}	9×10^{-4}	6×10^{-9}	3×10^{-5}
		I	6×10^{-8}	8×10^{-4}	2×10^{-9}	3×10^{-5}
Xenon (54)	Xe 131m	Sub	2×10^{-5}	.....	4×10^{-7}	.....
	Xe 133	Sub	1×10^{-5}	.....	3×10^{-7}	.....
	Xe 133m	Sub	1×10^{-5}	.....	3×10^{-7}	.....
	Xe 135	Sub	4×10^{-6}	.....	1×10^{-7}	.....
Ytterbium (70)	Yb 175	S	7×10^{-7}	3×10^{-3}	2×10^{-8}	1×10^{-4}
		I	6×10^{-7}	3×10^{-3}	2×10^{-8}	1×10^{-4}
Yttrium (39)	Y 90	S	1×10^{-7}	6×10^{-4}	4×10^{-9}	2×10^{-5}
		I	1×10^{-7}	6×10^{-4}	3×10^{-9}	2×10^{-5}
	Y 91m	S	2×10^{-5}	1×10^{-1}	8×10^{-7}	3×10^{-3}
		I	2×10^{-5}	1×10^{-1}	6×10^{-7}	3×10^{-3}
	Y 91	S	4×10^{-8}	8×10^{-4}	1×10^{-9}	3×10^{-5}
		I	3×10^{-8}	8×10^{-4}	1×10^{-9}	3×10^{-5}
	Y 92	S	4×10^{-7}	2×10^{-3}	1×10^{-8}	6×10^{-5}
		I	3×10^{-7}	2×10^{-3}	1×10^{-8}	6×10^{-5}
	Y 93	S	2×10^{-7}	8×10^{-4}	6×10^{-9}	3×10^{-5}
		I	1×10^{-7}	8×10^{-4}	5×10^{-9}	3×10^{-5}

25 F.R. 10914

APPENDIX B

Concentrations in Air and Water Above Natural Background--Continued

(See footnotes on page 20-15)

Element (atomic number)	Isotope [1]		Table I Column 1 Air (μCi/ml)	Table I Column 2 Water (μCi/ml)	Table II Column 1 Air (μCi/m³)	Table II Column 2 Water (μCi/ml)
Zinc (30)	Zn 65	S	1×10^{-7}	3×10^{-3}	4×10^{-9}	1×10^{-4}
		I	6×10^{-8}	5×10^{-3}	2×10^{-9}	2×10^{-4}
	Zn 69m	S	4×10^{-7}	2×10^{-3}	1×10^{-8}	7×10^{-5}
		I	3×10^{-7}	2×10^{-3}	1×10^{-8}	6×10^{-5}
	Zn 69	S	7×10^{-6}	5×10^{-2}	2×10^{-7}	2×10^{-3}
		I	9×10^{-6}	5×10^{-2}	3×10^{-7}	2×10^{-3}
Zirconium (40)	Zr 93	S	1×10^{-7}	2×10^{-2}	4×10^{-9}	8×10^{-4}
		I	3×10^{-7}	2×10^{-2}	1×10^{-8}	8×10^{-4}
	Zr 95	S	1×10^{-7}	2×10^{-3}	4×10^{-9}	6×10^{-5}
		I	3×10^{-8}	2×10^{-3}	1×10^{-9}	6×10^{-5}
	Zr 97	S	1×10^{-7}	5×10^{-4}	4×10^{-9}	2×10^{-5}
		I	9×10^{-8}	5×10^{-4}	3×10^{-9}	2×10^{-5}
Any single radionuclide not listed above with decay mode other than alpha emission or spontaneous fission and with radioactive half-life less than 2 hours.		sub	$[illegible]\times10^{-4}$		$[illegible]\times10^{-1}$	
Any single radionuclide not listed above with decay mode other than alpha emission or spontaneous fission and with radioactive half life greater than 2 hours.			3×10^{-11}	9×10^{-5}	1×10^{-10}	3×10^{-6}
Any single radionuclide not listed above, which decays by alpha emission or spontaneous fission.			6×10^{-13}	4×10^{-7}	2×10^{-14}	3×10^{-8}

[1] Soluble (S); Insoluble (I).

[2] "Sub" means that values given are for submersion in a semispherical infinite cloud of airborne material.

‡ 3. For soluble mixtures of U-238, U-234 and U-235 in air chemical toxicity may be the limiting factor. If the percent by weight (enrichment) of U-235 is less than 5, the concentration value for a 40-hour workweek, Table I, is 0.2 milligrams uranium per cubic meter of air average. For any enrichment, the product of the average concentration and time of exposure during a 40-hour workweek shall not exceed 8×10^{-3} SA μCi-hr/ml, where SA is the specific activity of the uranium inhaled. The concentration value for Table II is 0.007 milligrams uranium per cubic meter of air. The specific activity for natural uranium is 6.77×10^{-7} curies per gram U. The specific activity for other mixtures of U-238, U-235 and U-234, if not known, shall be:

$SA = 3.6\times10^{-7}$ curies/gram U — U-depleted

$SA = (0.4 + 0.38\,E + 0.0034\,E^2)\,10^{-6}$ — $E \geq 0.72$

where E is the percentage by weight of U-235, expressed as percent.

* Amended 37 FR 23319.
** Amended 39 FR 23990.
† Amended 38 FR 29311.
‡ Amended 39 FR 25463.

25 FR 10914

39 FR 23990

NOTE TO APPENDIX B

25 FR 10914

Note: In any case where there is a mixture in air or water of more than one radionuclide, the limiting values for purposes of this Appendix should be determined as follows:

1. If the identity and concentration of each radionuclide in the mixture are known, the limiting values should be derived as follows: Determine, for each radionuclide in the mixture, the ratio between the quantity present in the mixture and the limit otherwise established in Appendix B for the specific radionuclide when not in a mixture. The sum of such ratios for all the radionuclides in the mixture may not exceed "1" (i.e., "unity").

Example: If radionuclides A, B, and C are present in concentrations C_A, C_B, and C_C, and if the applicable MPC's, are MPC_A, and MPC_B, and MPC_C respectively, then the concentrations shall be limited so that the following relationship exists:

$$\frac{C_A}{MPC_A}+\frac{C_B}{MPC_B}+\frac{C_C}{MPC_C}\leq 1$$

30 FR 15801

2. If either the identity or the concentration of any radionuclide in the mixture is not known, the limiting values for purposes of Appendix B shall be:

a. For purposes of Table I, Col. 1—8×10^{-14}

b. For purposes of Table I, Col. 2—4×10^{-7}

c. For purposes of Table II, Col. 1—2×10^{-14}

d. For purposes of Table II, Col. 2—3×10^{-6}

26 FR 11046

3. If any of the conditions specified below are met, the corresponding values specified below may be used in lieu of those specified in paragraph 2 above.

a. If the identity of each radionuclide in the mixture is known but the concentration of one or more of the radionuclides in the mixture is not known, the concentration limit for the mixture is the limit specified in Appendix "B" for the radionuclide in the mixture having the lowest concentration limit; or

b. If the identity of each radionuclide in the mixture is not known, but it is known that certain radionuclides specified in Appendix "B" are not present in the mixture, the concentration limit for the mixture is the lowest concentration limit specified in Appendix "B" for any radionuclide which is not known to be absent from the mixture; or

30 FR 15801

a. Element (atomic number) and isotope	Table I		Table II	
	Column 1 Air (μCi/ml)	Column 2 Water (μCi/ml)	Column 1 Air (μCi/ml)	Column 2 Water (μCi/ml)
If it is known that Sr 90, I 125, I 126, I 129, I 131, (I 133, table II only), Pb 210, Po 210, At 211, Ra 223, Ra 224, Ra 226, Ac 227, Ra 228, Th 230, Pa 231, Th 232, Th-nat, Cm 248, Cf 254, and Fm 256 are not present		9×10^{-4}		3×10^{-4}
If it is known that Sr 90, I 125, I 126, I 129, (I 131, I 133, table II only), Pb 210, Po 210, Ra 223, Ra 226, Ra 228, Pa 231, Th-nat, Cm 248, Cf 254, and Fm 256 are not present		6×10^{-4}		2×10^{-4}
If it is known that Sr 90, I 129, (I 125, I 126, I 131, table II only), Pb 210, Ra 226, Ra 228, Cm 248, and Cf 254 are not present		2×10^{-4}		6×10^{-5}
If it is known that (I 129, table II only), Ra 226, and Ra 228 are not present		3×10^{-4}		1×10^{-5}
If it is known that alpha-emitters and Sr 90, I 129, Pb 210, Ac 227, Ra 228, Pa 230, Pu 241, and Bk 249 are not present	3×10^{-9}		1×10^{-10}	
If it is known that alpha-emitters and Pb 210, Ac 227, Ra 228, and Pu 241 are not present	3×10^{-10}		1×10^{-11}	
If it is known that alpha-emitters and Ac 227 are not present	3×10^{-11}		1×10^{-12}	
If it is known that Ac 227, Th 230, Pa 231, Pu 238, Pu 239, Pu 240, Pu 242, Pu 244, Cm 248, Cf 249 and Cf 251 are not present	3×10^{-12}		1×10^{-13}	

25 FR 13952

4. If the mixture of radionuclides consists of uranium and its daughter products in ore dust prior to chemical processing of the uranium ore, the values specified below may be used in lieu of those determined in accordance with paragraph 1 above or those specified in paragraphs 2 and 3 above.

39 FR 23990

a. For purposes of Table I, Col. 1—1×10^{-10} μCi/ml gross alpha activity; or 5×10^{-11} μCi/ml natural uranium; or 75 micrograms per cubic meter of air natural uranium.

b. For purposes of Table II, Col. 1—3×10^{-12} μCi/ml gross alpha activity; or 2×10^{-12} μCi/ml natural uranium; or 3 micrograms per cubic meter of air natural uranium.

26 FR 11046

5. For purposes of this note, a radionuclide may be considered as not present in a mixture if (a) the ratio of the concentration (C_A) of that radionuclide in the mixture to the concentration limit for that radionuclide specified in Table II of Appendix B (MPC_A) does not exceed 1/10 (i.e. $\frac{C_A}{MPC_A}\leq\frac{1}{10}$) and (b) the sum of such ratios for all the radionuclides considered as not present in the mixture does not exceed 1/4 (i.e. $\frac{C_A}{MPC_A}+\frac{C_B}{MPC_B}+\cdots\cdots\leq 1/4$).

35 FR 6425

APPENDIX C

Material	*Microcuries*
Americium-241	.01
Antimony-122	100
Antimony-124	10
Antimony-125	10
Arsenic-73	100
Arsenic-74	10
Arsenic-76	10
Arsenic-77	100
Barium-131	10
*Barium-133	10
Barium-140	10
Bismuth-210	1
Bromine-82	10
Cadmium-109	10
Cadmium-115m	10
Cadmium-115	100
Calcium-45	10
Calcium-47	10
Carbon-14	100
Cerium-141	100
Cerium-142	100
Cerium-144	1
Cesium-131	1,000
Cesium-134m	100
Cesium-134	1
Cesium-135	10
Cesium-136	10
Cesium-137	10
Chlorine-36	10
Chlorine-38	10
Chromium-51	1,000
Cobalt-58m	10
Cobalt-58	10
Cobalt-60	1
Copper-64	100
Dysprosium-165	10
Dysprosium-166	100
Erbium-169	100
Erbium-171	100
Europium-152 9.2 h	100
Europium-152 13 yr	1
Europium-154	1
Europium-155	10
Fluorine-18	1,000
Gadolinium-153	10
Gadolinium-159	100
Gallium-72	10
Germanium-71	100
Gold-198	100
Gold-199	100
Hafnium-181	10
Holmium-166	100
Hydrogen-3	1,000
Indium-113m	100
Indium-114m	10
Indium-115m	100
Indium-115	10
Iodine-125	1
Iodine-126	1
Iodine-129	0.1
Iodine-131	1
Iodine-132	10
Iodine-133	1
Iodine-134	10
Iodine-135	10
Iridium-192	10
Iridium-194	100
Iron-55	100
Iron-59	10
Krypton-85	100
Krypton-87	10
Lanthanum-140	10
Lutetium-177	100
Manganese-52	10
Manganese-54	10
Manganese-56	10
Mercury-197m	100
Mercury-197	100
Mercury-203	10
Molybdenum-99	100
Neodymium-147	100
Neodymium-149	100
Nickel-59	100
Nickel-63	10
Nickel-65	100
Niobium-93m	10
Niobium-95	10
Niobium-97	10
Osmium-185	10

35 FR 6425

Material	*Microcuries*
Osmium-191m*	100
Osmium-191	100
Osmium-193	100
Palladium-103	100
Palladium-109	100
Phosphorus-32	10
Platinum-191	100
Platinum-193m	100
Platinum-193	100
Platinum-197m	100
Platinum-197	100
Plutonium-239	.01
Polonium-210	0.1
Potassium-42	10
Praseodymium-142	100
Praseodymium-143	100
Promethium-147	10
Promethium-149	10
Radium-226	.01
Rhenium-186	100
Rhenium-188	100
Rhodium-103m	100
Rhodium-105	100
Rubidium-86	10
Rubidium-87	10
Ruthenium-97	100
Ruthenium-103	10
Ruthenium-105	10
Ruthenium-106	1
Samarium-151	10
Samarium-153	100
Scandium-46	10
Scandium-47	100
Scandium-48	10
Selenium-75	10
Silicon-31	100
Silver-105	10
Silver-110m	1
Silver-111	100
Sodium-24	10
Strontium-85	10
Strontium-89	1
Strontium-90	0.1
Strontium-91	10
Strontium-92	10
Sulphur-35	100
Tantalum-182	10
Technetium-96	10
Technetium-97m	100
Technetium-97	100
Technetium-99m	100
Technetium-99	10
Tellurium-125m	10
Tellurium-127m	10
Tellurium-127	100
Tellurium-129m	10
Tellurium-129	100
Tellurium-131m	10
Tellurium-132	10
Terbium-160	10
Thallium-200	100
Thallium-201	100
Thallium-202	100
Thallium-204	10
**Thorium (natural)[1]	100
Thulium-170	10
Thulium-171	10
Tin-113	10
Tin-125	10
Tungsten-181	10
Tungsten-185	10
Tungsten-187	100
**Uranium (natural)*	100
Uranium-233	.01
Uranium-234—Uranium-235	.01
Vanadium-48	10
Xenon-131m	1,000
Xenon-133	100
Xenon-135	100
Ytterbium-175	100
Yttrium-90	10
Yttrium-91	10
Yttrium-92	100
Yttrium-93	100
Zinc-65	10
Zinc-69m	100
Zinc-69	1,000
Zirconium-93	10
Zirconium-95	10
Zirconium-97	10

35 FR 6425

Any alpha emitting radionuclide not listed above or mixtures of alpha emitters of unknown composition	.01
Any radionuclide other than alpha emitting radionuclides, not listed above or mixtures of beta emitters of unknown composition	.1

NOTE: For purposes of §§ 20.203 and 20.304, where there is involved a combination of isotopes in known amounts the limit for the combination should be derived as follows: Determine, for each isotope in the combination, the ratio between the quantity present in the combination and the limit otherwise established for the specific isotope when not in combination. The sum of such ratios for all the isotopes in the combination may not exceed "1" (i.e., "unity"). Example: For purposes of § 20.304, if a particular batch contains 20,000 μCi† of Au^{198} and 50,000 μCi† of C^{14}, it may also include not more than 300 μCi† of I^{131}. This limit was determined as follows:

$$\dagger\ \frac{20{,}000\ \mu Ci\ Au^{198}}{100{,}000\ \mu Ci} + \frac{50{,}000\ \mu Ci\ C^{14}}{100{,}000\ \mu Ci} + \frac{300\ \mu Ci\ I^{131}}{1{,}000\ \mu Ci} = 1$$

The denominator in each of the above ratios was obtained by multiplying the figure in the table by 1,000 as provided in § 20.304.

[1] Based on alpha disintegration rate of Th-232, Th-230 and their daughter products.

[2] Based on alpha disintegration rate of U-238, U-234, and U-235.

* Amended 36 FR 16898.

** Amended 39 FR 23990.

† Amended 38 FR 29314.

Appendix D

UNITED STATES NUCLEAR REGULATORY COMMISSION

INSPECTION AND ENFORCEMENT REGIONAL OFFICES

Region	Address	Telephone	
		Daytime	Nights and Holidays
I Connecticut, Delaware, District of Columbia, Maine, Maryland, Massachusetts, New Hampshire, New Jersey, New York, Pennsylvania, Rhode Island, and Vermont	Region I, USNRC Office of Inspection and Enforcement 631 Park Avenue King of Prussia, Pa. 19406	(215) 337-4150	(215) 337-4150
II Alabama, Florida, Georgia, Kentucky, Mississippi, North Carolina, Panama Canal Zone, Puerto Rico, South Carolina, Tennessee, Virginia, Virgin Islands, and West Virginia	Region II, USNRC Office of Inspection and Enforcement 230 Peachtree St., N.W. Suite 1217 * Atlanta, Ga. 30303	* (404) 221-4503	* (404) 221-4503
III Illinois, Indiana, Iowa, Michigan, Minnesota, Missouri, Ohio, and Wisconsin	Region III, USNRC Office of Inspection and Enforcement 799 Roosevelt Road Glen Ellyn, Ill. 60137	(312) 858-2660	(312) 858-2660
IV Arkansas, Colorado, Idaho, Kansas, Louisiana, Montana, Nebraska, New Mexico, North Dakota, Oklahoma, South Dakota, Texas, Utah, and Wyoming	Region IV, USNRC Office of Inspection and Enforcement 611 Ryan Plaza Drive Suite 1000 Arlington, Texas 76012	(817) 334-2841	(817) 334-2841
V Alaska, Arizona, California, Hawaii, Nevada, Oregon, Washington, and U.S. territories and possessions in the Pacific	Region V, USNRC Office of Inspection and Enforcement 1990 N. California Blvd. Suite 202 Walnut Creek, Calif. 94596	(415) 486-3141	(415) 486-3141

40 FR 42557

*Amended 41 FR 55851.

UNIT II RADIATION MONITORING SYSTEM

1. Alarm light operation:

A) G-M tube area monitors - series 855

1. Fail Alarm - Green button - indicator
Green (fail) light - off indicates

a) power not available to the module
b) module is in the off state
c) module failure
d) detector failure

2. Alert alarm - Amber button - indicator

a) Alert alarm on (lit) indicates alert alarm trip.
b) Alert alarm button pressed while function switch is in ALARM postition, displays alert alarm setpoint.
c) Alert alarm pressed with function switch in OPER position, resets the alert alarm if the displayed radiation level on the meter is less than the alert alarm setpoint.

3. High alarm - Red button - indicator

a) High alarm on (lit) indicates high radiation alarm trip.
b) High alarm button pressed while function switch is in ALARM position, displays hgih alarm setpoint on meter.
c) High alarm button pressed with function switch in OPER position resets high alarm if the displayed radiation is less than the alarm setpoint.

B) Ion-chamber Area Monitor - Series 845 (HP-R-214 only)

1. Fail alarm - Green button - indicator

a) Fail alarm (green) OFF (not lit) indicates:

1. power supply failure
2. collector supply voltage failure

b) Fail alarm ON (lit) indicates normal operation.
c) Fail alarm button pressed resets either or both radiation alarms.

2. Alert alarm - Amber button - indicator

a) Alert alarm ON (lit) indicates alert radiation trip.
b) Alert alarm button pressed causes meter to indicate alert alarm trip setpoint.

3. High alarm - Red button - indicator

a) High alarm ON (lit) indicates high radiation trip.

b) High alarm button pressed causes meter to indicate high alarm trip setpoint.

C) Process Monitors - Particulate, Iodine, Gas and Liquid, Monitors - Series 842

1. Fail alarm - Green button - Indicator

a) Fail alarm (Green) OFF (not lit) indicates:

1. Power not available to ratemeter.
2. function switch is off
3. ratemeter failure
4. detector failure
5. green indicator light failure

b) Fail alarm ON (lit) indicates normal operation.
c) Fail alarm button pressed resets the radiation alarms if the displayed radiation level is below the alarm setpoints.

2. Alert alarm - amber button - indicator

a) Alert alarm ON (lit) indicates alert radiation trip.
b) Amber button pressed while function switch is in the CAL position causes the alert alarm setpoint to be displayed on the module panel meter.

CAUTION: The alarm setpoint is displayed only with the button pressed in - CAL, otherwise CAL is indicated with the button released.

3. High Alarm - Red button - indication

a) High alarm ON (lit) indicates high radiation trip and associated interlock if applicable.
b) High alarm button pressed while function switch is at the CAL position causes the high alarm setpoint to be displayed on the meter.

CAUTION: The alarm setpoint is displayed only with the button pressed in - CAL otherwise CAL is indicated on the button release.

Small pushbutton will only silence the local alarm on the atmospheric monitors (series 842 monitors).

RMS INFORMATION UNIT II

1. RMS inter] k functions bypassed with keyswitch.

2. Particulate Monitors employ moveable filter capstan (Rotate) Solenoid/ Ratchet Drive of Capstan Normal 1"/hr Prog 4"/hr Advance (Tear) 7.5"/min Capstan activated every seven (7) minutes. Prog. mode moves clean filter paper in front of detector (≈4") once an hour. Advance (Tear) moves clean paper in front of detector in ≈20 sec..

3. Iodine Channel GAMMA Scint. employes a NaI crystal.

4. Off-line monitors (Liquid or Gas only) stainless steel liner removable for easy decon.

5. Failed fuel monitor sensitivity can be changed by use of lead collimater.

6. No delay coil prior to failed fuel monitor.

AREA MONITORS

MONITOR ID	MONITOR NAME	MONITOR LOCATION	LOCAL READOUT	RAD. DETECTED/ DETECTOR	CHECK SOURCE	SETPOINTS (HIGH)	CODE
HP-R-201	Control Room	Cont. Bldg. (305) (Column c48/cA)	NONE	GAMMA/G-M		1.4 mR/hr	CAN
HP-R-202	Cable Room	Cont. Bldg. (305) (Column c47a/cC)	M,IL,H	GAMMA/G-M		1 4 mR/hr	CARL
HP-R-204	RB Emer. Cooling Booster Pump Area	Aux. Bldg (280-6) (Column AB/A61)	M,IL,H	GAMMA/G-M		2 MR/hr	REALLY
HP-R-205	RC Evaporative Control Panel Area	Aux. Bldg (280-6) (Column AG/A63)	M,IL,H	GAMMA/G-M		2 MR/hr	RAPE
HP-R-206	Make-up Tank Area	Aux.Bldg. (305) (entrance to MUT1)	M,IL,H	GAMMA/G-M		20 MR/hr	MOLLY
HP-R-207	Intermediate Cooling Pump Area	Aux. Bldg (305) (South of ICP1B)	M,IL,H	GAMMA/G-M		2 MR/hr	IF
HP-R-209	Fuel Handling Bridge North	Rx. Bldg. (347-6) (Main F.H. Bridge)	M,IL	GAMMA/G-M		5 R/hr 1 R/hr Mode 6	FRED
HP-R-210	Fuel Handling Bridge South	Rx. Bldg. (347-6) (Aux. F.H. Bridge)	M,IL	GAMMA/G-M		5 R/hr 1 R/hr Mode 6	FONDLES

M-Meter
IL-Ind. Light
H-Horn

For Information on Setpoints Refer to 2105-1.12

AREA MONITORS

MONITOR ID	MONITOR NAME	MONITOR LOCATION	LOCAL READOUT	RAD. DETECTED/ DETECTOR	CHECK SOURCE	SETPOINTS (HIGH)	CODE
HP-R-211	Personnel Access Hatch	Rx. Bldg (305) (On Elevator Wall	M,IL,H	GAMMA/G-M		50 MR/hr	POLLY
HP-R-212	Equipment Hatch	Rx. Bldg (305) (Column R4)	M,IL,H	GAMMA/G-M		50 MR/hr	ENOUGH?
HP-R-213	Incore Inst. Panel Area	Rx. Bldg (347-6) (Northside A O-ring)	M,IL,H	GAMMA/G-M		50 MR/hr	I'D
HP-R-214	Reactor Building Dome	Rx. Bldg ( )	NONE	GAMMA/ION		8 R/hr	RATHER
HP-R-215	Fuel Handling Building	F.H. Bldg (347-6) (FH Bridge)	M,IL,H	GAMMA/G-M		20 mR/hr	FONDLE
HP-R-218.	Waste Disposal Storage Area		M,IL,H	GAMMA/G-M		50 MR/hr	WANDA
HP-R-231	Aux. Bldg Sump Tank Filter Room	Aux. Bldg (280-6) (Column AQ/A6Zb)	M,IL,H	GAMMA/G-M		1 R/hr	AND
HP-R-232	Aux. Bldg Access Corridor	Aux. Bldg (305) (Column AT/A61) Radwaste Panel Area	M, ,H	GAMMA/G-M		2 MR/hr	REALLY

AREA MONITORS

MONITOR ID	MONITOR NAME	MONITOR LOCATION	LOCAL READOUT	RAD. DETECTED/ DETECTOR	CHECK SOURCE	SETPOINTS (HIGH)	CODE
HP-R-233	Aux. Bldg Access Corridor	Aux. Bldg (305) (Column AN/A63) (S.F. Filter Area)	M,IL,H	GAMMA/G-M		2 MR/hr	SWEET
HP-R-234	Cont. & Service Bldg Corridor	Serv. Bldg (280-6) (Column CE/c50a) (Cont. Drn Tk Area)	M,IL,H	GAMMA/G-M		2 MR/hr	COOKS IN THE
HP-R-3236	Rx. Bldg Purge Unit Area	Aux. Bldg (328) (Column AE/A64)	M,IL,H	GAMMA/G-M		20 MR/hr	R
HP-R-3238	Aux. Bldg Exhaust Unit Area	Aux. Bldg (328) (Column AJ/A63)	M,IL,H	GAMMA/G-M		20 MR/hr	A
HP-R-3240	F.H. Bldg Exhaust Unit Area	Aux. Bldg (328) (Column AL/A63)	M,IL,H	GAMMA/G-M		20 MR/hr	F

(PROCESS) ATMOSPHERIC MONITORS

MONITOR ID		MONITOR NAME	MONITOR LOCATION	REMOTE READOUT	DETECTOR	CHECK SOURCE	SETPOINTS (HIGH)	CODE
HP-R-219	P I G	Station Vent	Aux. Bldg (328) (Near Column AB/A65)	Monitor	Beta Scint. Gamma Scint. Beta Scint.	CS-137 BA-133 CS-137	1.3E+3CPM 1,58E+5CPM 1E+4 CPM	VIC
HP-R-220	P I G	Control Room Intake Duct	Cont. Bldg (351-6) Near Column T35/CD)	NONE	Beta Scint. Gamma Scint. Beta Scint.	CS-137 BA-133 CS-137	300 CPM 2E+5CPM 260 CPM	CAN
HP-R-221A	P I G	F.H. Bldg Exhaust Duct (Before Filter)	Aux. Bldg (328) Northwall (Column AT/A63)	NONE	Beta Scint. Gamma Scint. Beta Scint.	CS-137 BA-133 CS-137	2E+3 CPM 2.5E+5CPM 4E+4 CPM	FLY
HP-R-221B	P I G	F.H. Bldg Exhaust Duct (After Filter)	Aux. Bldg (328) Northwall (Column AT/A63)	NONE	Beta Scint. Gamma Scint. Beta Scint.	CS-137 BA-133 CS-137	7E3 CPM 2E5 CPM 3E4 CPM	FOR
HP-R-222	P I G	Aux. Bldg Purge Air Exhaust (Before Filter)	Aux. Bldg (328) Northwall (Column AT/A63)	NONE	Beta Scint. Gamma Scint. Beta Scint.	CS-137 BA-133 CS-137	5E3 CPM 1.5E5CPM 2E4 CPM	A
HP-R-223	P I G	Moveable Monitor Spent Fuel Area	F.H. Bldg (347-6) Eastwall (Column AH/A65)	Monitor	Beta Scint. Gamma Scint. Beta Scint.	CS-137 BA-133 CS-137	1.1E3 CPM 2.3E5 CPM 260 CPM	MILE
HP-R-224	P I G	Moveable Monitor Aux. Bldg	Aux. Bldg (280-6) Westwall (Column AQ/A65)	Monitor	Beta Scint. Gamma Scint. Beta Scint.	CS-137 BA-133 CS-137	1.1E3 CPM 2.3E5 CPM 260 CPM	MORE than
HP-R-225	P I G	Rx. Bldg Purge Air Exhaust Duct A	Aux. Bldg (328) West of Column ABa/A64	NONE	Beta Scint. Gamma Scint. Beta Scint.	CS-137 BA-133 CS-137	1E4 CPM 2E5 CPM 8E4 CPM	ROY

FOR MORE INFORMATION ON SETPOINTS REFER TO 2105-1.12

MONITOR ID	MONITOR NAME	MONITOR LOCATION	REMOTE READOUT	DETECTOR	CHECK SOURCE	SETPOINTS (HIGH)	CODE
	(PROCESS)			ATMOSPHERIC MONITORS			
HP-R-226 P I G	Rx. Bldg Purge Air Exhaust Duct B	Aux. Bldg (328) West of Column ABa/A64	NONE	Beta Scint. Gamma Scint. Beta Scint.	CS-137 BA-133 CS-137	1E4 CPM 2E5 CPM 8E4 CPM	ROGERS
HP-R-227 P I G	Rx. Air Sample Line	Aux. Bldg (305) Near Column ABa/A64	Monitor	Beta Scint. Gamma Scint. Beta Scint.	CS-137 BA-133 CS-137	5E4 CPM 5E3 CPM 2E4 CPM	RAN
HP-R-228 P I G	Aux. Bldg Purge Air Exhaust (After Filter)	Aux. Bldg (328) Northwall Column AT/A626	NONE	Beta Scint. Gamma Scint. Beta Scint.	CS-137 BA-133 CS-137	4E3 CPM 1E5 CPM 2E4 CPM	AFTER
HP-R-229 P I G	H_2 Purge Duct	Aux. Bldg (328) Westwall Column AE/A65	NONE	Beta Scint. Gamma Scint. Beta Scint.	CS-137 BA-133 CS-137	1.6E5 CPM 4E5 CPM 1.2E5 CPM	HIS
WDG-R-1480 G	Waste Gas Discharge	Aux. Bldg (328) West of Column AB/A62A	Panel 302 B	Beta Scint.	CS-137	4E5 CPM	WIFE
WDG-R-1485 G	Decay Gas Tank A Discharge	Aux. Bldg (305) (WDG-T-1A Valve Room)	Panel 302B	Beta Scint.	CS-137	3E5 CPM	DALE'S
WDG-R-1486 G	Decay Gas Tank B Discharge	Aux. Bldg (305) (WDG-T-1B Valve Room)	Panel 302B	Beta Scint.	CS-137	3E5 CPM	DIRTY
VA-R-748 G	Condensor Vacuum Pump Exhaust	Turb. Bldg (281-6) East of Column TG/T42	NONE	Beta Scint.	CS-137	2E3 CPM	CLOTHES

(PROCESS) LIQUID MONITORS

MONITOR ID	MONITOR NAME	MONITOR LOCATION	REMOTE READOUT	DETECTOR	CHECK SOURCE	SETPOINT	CODE
MU-R-720HI	Primary Coolant Letdown HI	Aux. Bldg (305) Outside North Wall Makeup Demin (MU-K-1A)	NONE	GAMMA Scint.	BA-133	(GROSS) 5E5 CPM	LOVELY
MU-R-720LO	Primary Coolant Letdown LO	Aux. Bldg (305) Outside North wall Makeup Demin (MU-K-1A)	NONE	GAMMA Scint.	BA-133	(ANALYZE) 5E5 CPM	LUCY
IC-R-1091	Intermed. Cooling Letdown Cooler B (MU-C-1B)	Rx. Bldg (282-6) Outside RB Sump Room	NONE	GAMMA Scint.	BA-133	5,000 CPM	INVITED
IC-R-1092	Intermed. Cooling Letdown Cooler A (MU-C-1A)	Rx. Bldg (282-6) Outside RB Sump Room	NONE	GAMMA Scint.	BA-133	5,000 CPM	ILJES
IC-R-1093	Intermed. Cooling Cooler Outlet	Aux. Bldg (305) East of Column AB/A63	NONE	GAMMA Scint.	BA-133	2,000 CPM	INTO
WDL-R-1311	Plant Effluent Unit II	Aux. Bldg (280-6) Column AN/A63	Panel 301	GAMMA Scint.	BA-133	1800 CPM or as calculated per HPP 162[illegible].2	ENOUGH
DC-R-3399	Decay Heat Closed A Loop	F.H. Bldg (280-6) Column AK/A67	NONE	GAMMA Scint.	BA-133	2,000 CPM	DIRTY
DC-R-3400	Decay Heat Closed B Loop	F.H. Bldg (280-6) Column AK/A67	NONE	GAMMA Scint.	BA-133	2,000 CPM	DEALS

(PROCESS) LIQUID MONITORS

MONITOR ID	MONITOR NAME	MONITOR LOCATION	REMOTE READOUT	DETECTOR	CHECK SOURCE	SETPOINT	CODE
NS-R-3401	Nuc. Serv. Closed Cooling	Aux. Bldg (305) (North of NS-T-2)	NONE	GAMMA Scint.	BA-133	2,000 CPM	NOW
SF-R-3402	Spent Fuel Cooling	Aux. Bldg (305) (West of SF-P-1A)	NONE	GAMMA Scint.	BA-133	1E4 CPM	SHE
WT-R-3894	Water Treatment & Condensate Polishing	Turb. Bldg (281-6) Southside Regen. Station East wall	LOCAL ONLY	GAMMA Scint.	BA-133	2,000 CPM	WANTS
WT-R-3894	Water Treatment & Condensate Polishing	Turb. Bldg (281-6) Southside Regen. Station East wall	LOCAL ONLY	GAMMA Scint.	BA-133	1,500 CPM	WEST

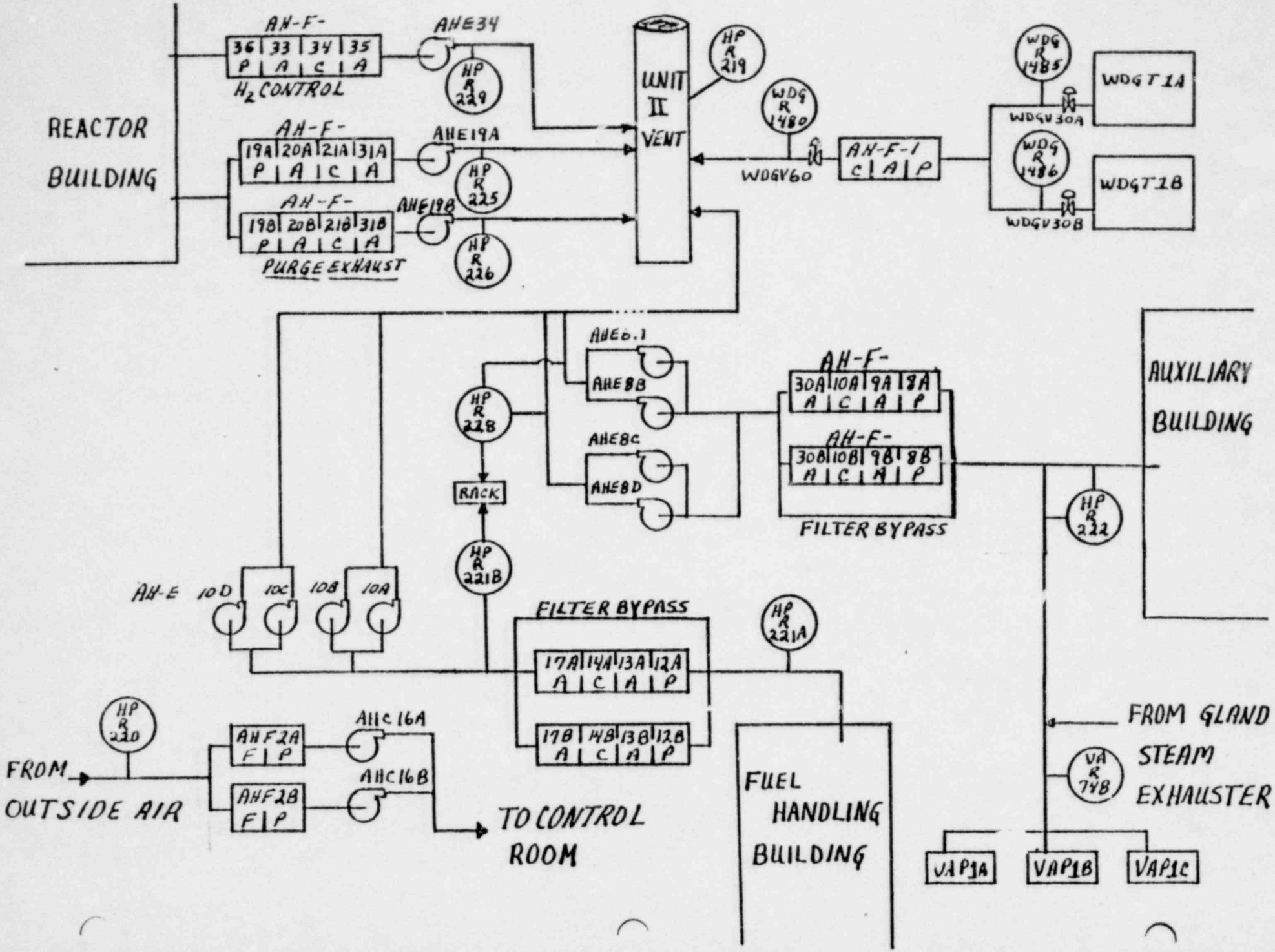
REACTOR BUILDING
AH-F-
36 P | 33 A | 34 C | 35 A
H_2 CONTROL
AHE34
HP R 229
AH-F-
19A P | 20A A | 21A C | 31A A
AHE19A
HP R 225
AH-F-
19B P | 20B A | 21B C | 31B A
PURGE EXHAUST
AHE19B
HP R 226
UNIT II VENT
HP R 219
WDG R 1480
WDGV60
AH-F-1 C | A | P
WDG R 1485
WDGV30A
WDG R 1486
WDGV30B
WDGT1A
WDGT1B
AHE6.1
AHE8B
AHE8C
AHE8D
HP R 228
RACK
HP R 221B
AH-F-
30A A | 10A C | 9A A | 8A P
AH-F-
30B A | 10B C | 9B A | 8B P
FILTER BYPASS
AUXILIARY BUILDING
HP R 222
AH-E 10D 10C 10B 10A
FILTER BYPASS
17A A | 14A C | 13A A | 12A P
17B A | 14B C | 13B A | 12B P
HP R 221A
HP R 220
FROM OUTSIDE AIR
AHF2A F | P
AHF2B F | P
AHC16A
AHC16B
TO CONTROL ROOM
FUEL HANDLING BUILDING
FROM GLAND STEAM EXHAUSTER
VA R 74B
VAP1A
VAP1B
VAP1C

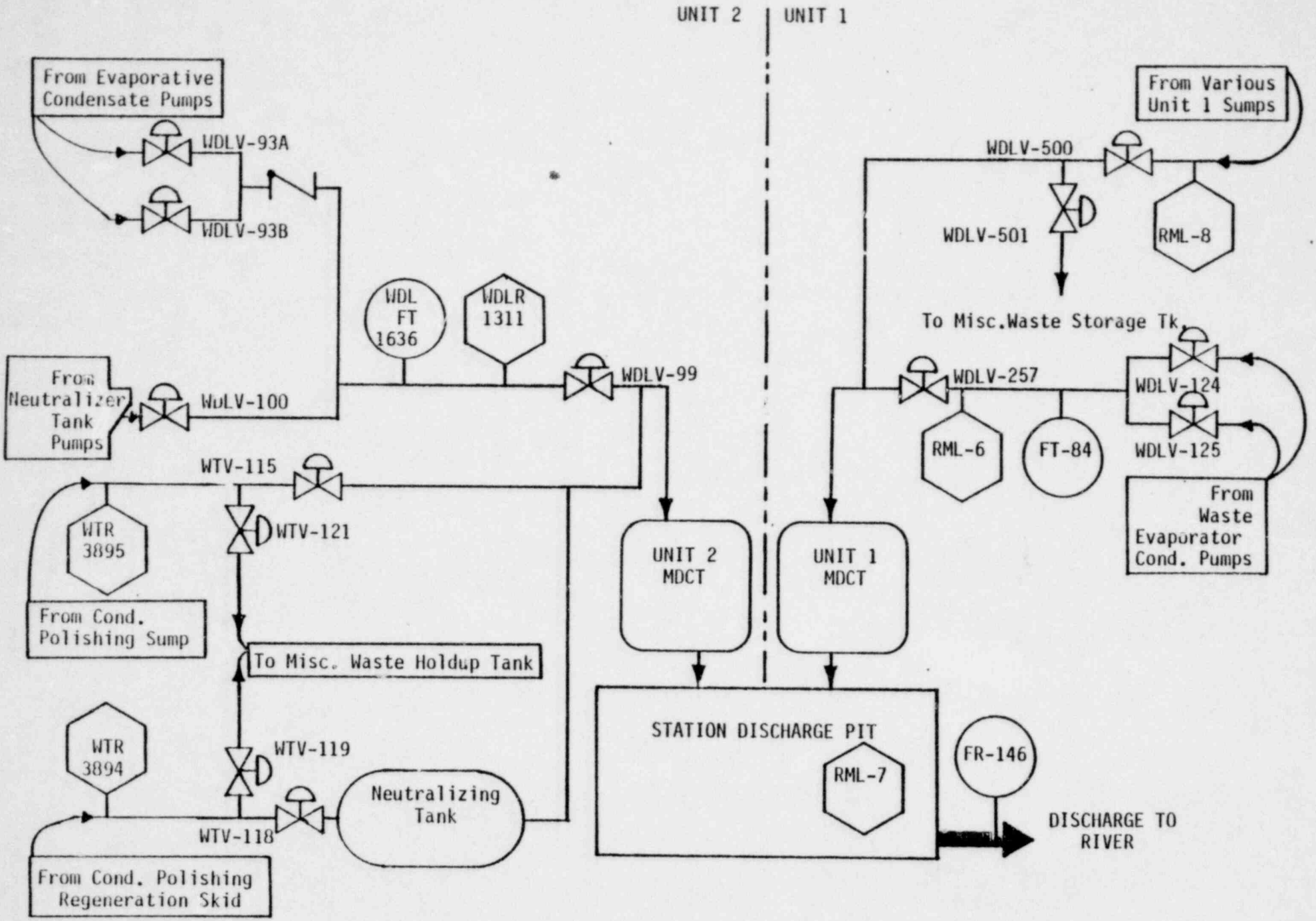
UNIT 2
UNIT 1
From Evaporative Condensate Pumps
WDLV-93A
WDLV-93B
From Neutralizer Tank Pumps
WDLV-100
WDL FT 1636
WDLR 1311
WDLV-99
WTV-115
WTV-121
WTR 3895
From Cond. Polishing Sump
To Misc. Waste Holdup Tank
WTR 3894
WTV-119
WTV-118
Neutralizing Tank
From Cond. Polishing Regeneration Skid
UNIT 2 MDCT
UNIT 1 MDCT
STATION DISCHARGE PIT
RML-7
FR-146
DISCHARGE TO RIVER
From Various Unit 1 Sumps
WDLV-500
WDLV-501
RML-8
To Misc.Waste Storage Tk.
WDLV-257
RML-6
FT-84
WDLV-124
WDLV-125
From Waste Evaporator Cond. Pumps

UNIT II RMS INTERLOCKS

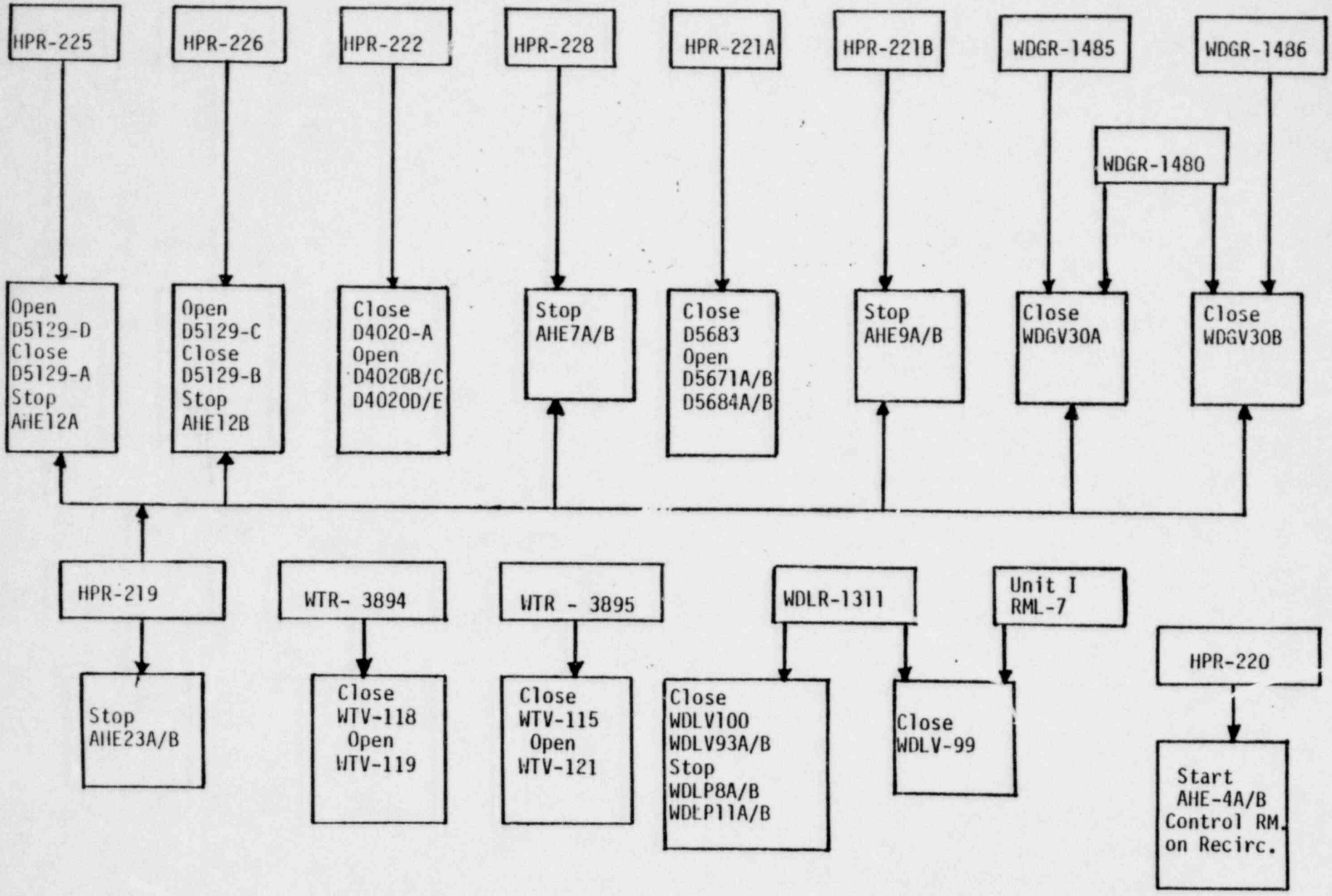

UNIT 2 RMS INTERLOCKS

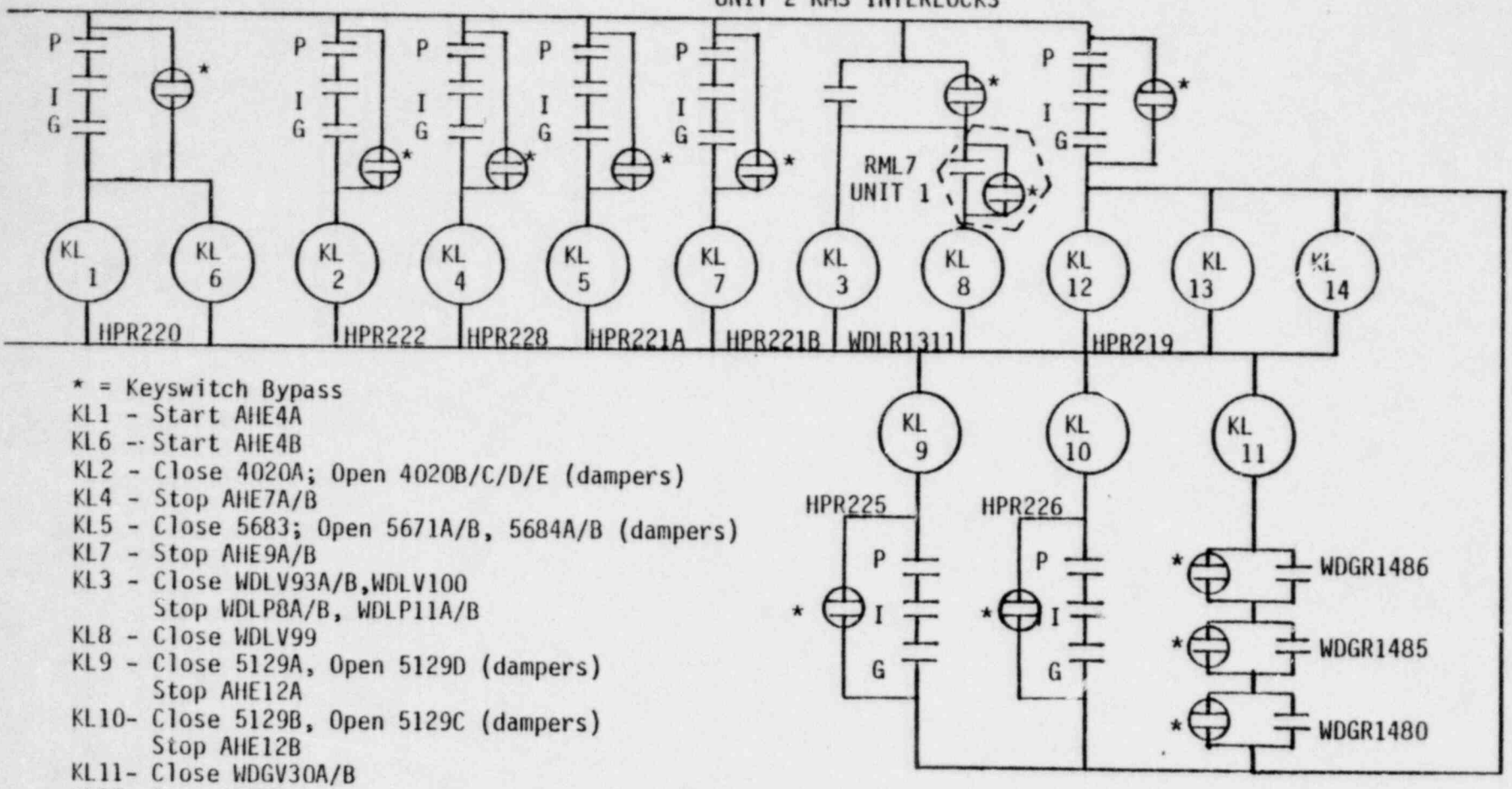

* = Keyswitch Bypass
KL1 - Start AHE4A
KL6 - Start AHE4B
KL2 - Close 4020A; Open 4020B/C/D/E (dampers)
KL4 - Stop AHE7A/B
KL5 - Close 5683; Open 5671A/B, 5684A/B (dampers)
KL7 - Stop AHE9A/B
KL3 - Close WDLV93A/B,WDLV100
Stop WDLP8A/B, WDLP11A/B
KL8 - Close WDLV99
KL9 - Close 5129A, Open 5129D (dampers)
Stop AHE12A
KL10- Close 5129B, Open 5129C (dampers)
Stop AHE12B
KL11- Close WDGV30A/B
KL12- Stop AHE7A/B
KL13- Stop AHE9A/B
KL14- Stop AHE23A/B

Note: Interlocks not shown for WTR3894 and WTR3895 since these monitors are not indicated in the control room.

ENCLOSURE 1

CATEGORY IV CRO STUDY ASSIGNMENT SHEET

NAME: _____ START DATE: _____

COMPLETION DATE: _____

ASSIGNMENTS _____ 5th CYCLE 2nd HALF

1. Read the following Procedures:

   a. 1103-15 (2103-1.9) Reactivity Balance
   b. 1103-16 (2103-1.10) Heat Balance
   c. 1105-10 (2105-1.10) Computer

2. Complete the following

   a. Hand calculation of Heat Balance
   b. Computer Calculation of Heat Balance (explain the printout)
   c. Computer Reactivity Balance (explain the printout)
   d. Reactivity Balance (SDM)
   e. Reactivity Balance (ECP)
   f. Reactivity Balance (change Boron)

3. Read second half of Environmental Tech Specs.

TOTAL POINTS TO DATE FROM ENCLOSURE 2 _____

WRITTEN TEST DATE _____ RESULTS _____

ORAL TEST DATE _____ RESULTS _____

ANSWERS MISSED, HANDED IN CORRECTED _____

_____ DATE: _____

SIGNATURE OF LICENSED TRAINING COORD.

ENCLOSUPE 1

CATEGORY IV CRO STUDY ASSIGNMENT SHEET

NAME _____ START DATE: _____

COMPLETION DATE: _____

ASSIGNMENTS _____ 6th CYCLE 2nd HALF _____

1. Review Procedures

   a. Administrative
   b. Emergency
   c. Abnormal
   d. Operating

2. Review Tech Specs

3. Review Reactor Theory

TOTAL POINTS TO DATE FROM ENCLOSURE 2 _____

WRITTEN TEST DATE _____ RESULTS _____

ORAL TEST DATE _____ RESULTS _____

ANSWERS MISSED, HANDED IN CORRECTED _____

_____ DATE: _____

SIGNATURE OF LICENSED TRAINING COORD.