7.1 INTRODUCTION

7.1.1 IDENTIFICATION OF SAFETY RELATED SYSTEMS

This Subsection is divided into two subsections: 7.1.1a, listing systems provided with the nuclear steam supply system (NSSS), and 7.1.1b, listing systems provided by others (non-NSSS). Division of responsibility is indicated in this manner throughout Chapter 7 where required.

Systems added by PP&L may be listed in the NSSS Subsection if the PP&L supplied systems are modifications of or additions to one or more NSS system, or if the PP&L supplied systems serve a specific redundancy or diversity function with respect to one or more NSS system.

This arrangement is used to preserve the standard format of the NSSS supplier. Subsection assignments in the NSSS format which were assigned to non-NSSS will be indicated with the sentence, "This Subsection was not used."

7.1.1a IDENTIFICATION OF SAFETY-RELATED SYSTEMS PROVIDED WITH THE NSSS

7.1.1a.1 General (NSSS)

Instrumentation and control systems supplied by General Electric are designated as either power generation systems or safety systems, depending on their function. Some portions of a system may have a safety function while other portions of the same system may be classified as power generation. A description of this system of classification can be found in Appendix 15A.

START HISTORICAL

The systems presented in Chapter 7.0 are also classified according to Regulatory Guide 1.70, Revision 2; namely, Reactor Protection (Trip) System, Engineered Safety Feature Systems, Safe Shutdown Systems, Safety-Related Display Instrumentation, Other Systems Required for Safety, and Control Systems Not Required for Safety. Table 7.1-1 lists the systems under each of these classifications and identifies the designer and/or the supplier. *Table 7.1-2 identifies instrumentation and control systems that are similar to those of a nuclear power plant of similar design that has recently received NRC design or operation approval through the issuance of either a construction permit or an operating license. Differences and their effect on safety-related systems are also identified in Table 7.1-2.*

END HISTORICAL

7.1.1a.2 Identification of Individual Systems

The following are safety-related systems:

(1) Reactor Protection System (RPS)
(2) Primary Containment and Reactor Vessel Isolation Control System (PCRVICS)
(3) Emergency Core Cooling Systems (ECCS)
(4) Neutron Monitoring System (NMS)
(5) Process Radiation Monitoring System
(6) Reactor Core Isolation Cooling (RCIC) System
(7) Standby Liquid Control System (SLCS)
(8) NSSS Leak Detection Systems
(9) RHRS Reactor Shutdown Mode (RHR)
(10) Safety-Related Display
(11) RHRS - Containment Spray Cooling Mode
(12) Recirculation Pump Trip (RPT) System
(13) RHRS Suppression Pool Cooling Mode
(14) ATWS Mitigation Capability - Alternate Rod Injection (ARI) System – Non-NSSS

7.1.1a.3 Classification (NSSS)

7.1.1a.3.1 Safety-Related Systems (NSSS)

Safety-related systems provide actions necessary to assure safe shutdown, to protect the integrity of radioactive material barriers, and/or to prevent the release of radioactive material in excess of allowable dose limits. These systems may be components, groups of components, systems, or groups of systems. Engineered Safety Feature (ESF) systems are included in this category. ESF systems have a sole function of mitigating the consequences of design basis accidents.

The Isolated Condenser Treatment Method (ICTM) is an ESF that mitigates the consequences of post LOCA, MSIV leakage. The ICTM is an approved Non-Safety-Related alternative to Regulatory Guide 1.96 for treating MSIV leakage. Therefore, the ICTM is an ESF that is not included in the Safety-Related category.

7.1.1a.3.2 Power Generation (Non-Safety) Systems (NSSS)

Power generation systems are not required to protect the integrity of radioactive material barriers and/or prevent the release of radioactive material beyond allowable dose limits. The instrumentation and control portions of these systems may, by their actions, prevent the plant from exceeding preset limits which would otherwise initiate action of the safety-related systems.

7.1.1a.3.3 Design Basis (NSSS)

The various NSS Systems may have both a safety design basis and a power generation design basis depending on their function. The safety design basis states in functional terms the unique design requirements that establish limits for the operation of the system. The general functional requirements portion of the safety design basis presents those requirements which have been determined to be sufficient to ensure the adequacy and reliability of the system from a safety viewpoint. These requirements have been introduced into various codes, criteria, and regulatory requirements. Safety and Power generation design bases are discussed in Subsection 15A.2.2.

7.1.1a.3.4 Specific Regulatory Requirements (NSSS)

The NSS Systems have been examined with respect to specific regulatory requirements which are applicable to the subject instrumentation and controls systems. These regulatory requirements include:

(a) Industry codes and standards
(b) Title 10 Code of Federal Regulations
(c) NRC electrical instrumentation and control systems branch technical positions, and
(d) NRC Regulatory Guides

The specific regulatory requirements applicable to NSSS's instrumentation and control are specified in Table 7.1-3. The RPS, PCRVICS, ECCS, and Leak Detection Systems have been reduced to the subsystem level, and the applicable regulatory requirements for each have been specified. This information is contained in Sections 7.2, 7.3, and 7.6.

7.1.1b IDENTIFICATION OF SAFETY RELATED SYSTEMS NOT PROVIDED WITH THE NSSS (NON-NSSS)

7.1.1b.1 Engineered Safety Feature Systems (Non-NSSS)

Instrumentation and controls for Engineered Safety Feature (ESF) Systems are identified as follows:

(1) Primary containment isolation controls
(2) Combustible gas control system
(3) Primary containment vacuum relief
(4) Standby gas treatment system
(5) Reactor building recirculation system
(6) Reactor building isolation and HVAC support

(7) Habitability systems including control room envelope isolation and supporting HVAC systems

a) Control room HVAC
b) Control structure HVAC
c) Computer room cooling system
d) Emergency outside air supply
e) Battery room exhaust system

7.1.1b.2 Engineered Safety Feature Auxiliary Support Systems (Non-NSSS)

Instrumentation and controls for ESF auxiliary support systems are identified as follows:

(1) Emergency service water (ESW)
(2) RHR service water (RHRSW)
(3) Containment instrument gas
(4) Standby power
(5) Heating, ventilating, and air conditioning for ESC areas:

a) Standby gas treatment equipment room
b) Diesel generator buildings
c) SEW pumphouse
d) ESC switchgear room
e) ECCS unit coolers
f) Drywell unit coolers
g) Control structure chilled water system

7.1.1b.3 Systems Required for Safe Shutdown (Non-NSSS)

Instrumentation an controls for the system required for safe shutdown are identified as:

(1) Reactor shutdown outside the main control room

7.1.1b.4 Safety Related Display Instrumentation (Non-NSSS)

Safety-related display instrumentation described provides operator information for normal plant operations and to perform manual safety functions.

Safety-related displays are provided for monitoring the following:

(1) ESF systems
(2) ESF auxiliary support systems
(3) Plant processes
(4) Bypass and inoperable status
(5) Post-accident monitoring
(6) Reactor shutdown outside the control room

7.1.1b.5 Other Systems Required for Safety (Non-NSSS)

Instrumentation and controls for all other systems required for safety are identified as:

(1) Drywell entry purge
(2) Containment atmosphere monitoring
(3) NSSS to non-NSSS interlocks for standby power start (diesels)
(4) Process and effluent radiation monitoring

START HISTORICAL

7.1.1b.6 Non-NSSS Systems Similar to Plants Which Have An Operating License

Non-NSSS ESF Systems and auxiliary support systems, while functionally similar to other plants, are not sufficiently similar to other plants to allow meaningful comparison. However, certain equipment, noted below and in Table 7.1-2, was furnished as part of the NSSS Contract and therefore is similar to the equipment furnished in the plants noted in the table. The application of the equipment should be considered unique to Susquehanna SES. Similar equipment:

Process Radiation Monitoring Equipment
Area Radiation Monitoring Equipment
Primary Containment and Reactor Vessel Isolation Control System (See Note 2 on Table 7.1-2)

END HISTORICAL

7.1.2 IDENTIFICATION OF SAFETY CRITERIA

7.1.2a.1 Identification of Safety Criteria for NSSS, General

Design bases and criteria for instrumentation and control equipment design are based on the need to have the system perform its intended function while meeting the requirements of applicable general design criteria, regulatory guides, industry standards, and other documents.

7.1.2a.1.1 Reactor Protection System (RPS) – Instrumentation and Control

7.1.2a.1.1.1 Safety Design Bases

7.1.2a.1.1.1.1 General Functional Requirements

The reactor protection system (RPS) is designed to meet the following functional requirements:

(1) The RPS shall initiate a reactor scram with precision and reliability to prevent or limit fuel damage following abnormal operational transients.

(2) The RPS shall initiate a scram with precision and reliability to prevent damage to the reactor coolant pressure boundary (RCPB) as a result of excessive internal pressure; that is, to prevent reactor vessel pressure from exceeding the limit allowed by applicable industry codes.

(3) To limit the uncontrolled release of radioactive materials from the fuel assembly or RCPB, the RPS shall precisely and reliably initiate a reactor scram on gross failure of either of these barriers.

(4) To detect conditions that threaten the fuel assembly or RCPB, the RPS inputs shall be derived from variables that are true, direct measures of operational conditions.

(5) The RPS shall respond correctly to the sensed variables over the expected range of magnitudes and rates of change.

(6) A sufficient number of sensors shall be provided for monitoring essential variables that have spatial dependence.

(7) The following bases assure that the RPS is designed with sufficient reliability:

a. If failure of a control or regulating system causes a plant condition that requires a reactor scram but also prevents action by necessary reactor protection system channels, the remaining portions of the RPS shall meet the requirements 1, 2, and 3 above.

b. Loss of one power supply shall neither cause nor prevent a reactor scram.

c. Once initiated, a RPS action shall go to completion. Return to normal operation shall require deliberate operator action.

d. There shall be sufficient electrical and physical separation between redundant instrumentation and control equipment monitoring the same variable to prevent environmental factors, electrical transients, or physical events from impairing the ability of the system to respond correctly.

e. Safe Shutdown Earthquake, as amplified by building and supporting structures, shall not impair the ability of the RPS to initiate a reactor scram.

f. No single failure within the RPS shall prevent proper reactor protection system action, when required, to satisfy safety design bases 1, 2, and 3 above.

g. Any one intentional bypass, maintenance operation, calibration operation, or test to verify operational availability shall not impair the ability of the RPS to respond correctly.

h. The system shall be designed to that the required number of sensors for any monitored variable exceeding the scram setpoint will initiate an automatic scram.

(8) The following bases reduce the probability that RPS operational reliability and precision will be degraded by operator error:

a. Access to trip settings, component calibration controls, test points, and other terminal points shall be under the control of plant operations supervisory personnel.

b. Manual bypass of instrumentation and control equipment components shall be under the control of the control room operator. If the ability to trip some essential part of the system has been bypassed, this fact shall be continuously annunciated in the main control room.

7.1.2a.1.1.1.2 Specific Regulatory Requirements

The specific regulatory requirements applicable to this system are shown in Tables 7.1-3 and 7.1-4. The degree of conformance to these requirements is discussed in the analysis section for this system.

7.1.2a.1.1.2 Power Generation (Non-Safety) Design Bases

The setpoints, power sources, and control and instrumentation are arranged in such a manner as to preclude spurious scrams.

7.1.2a.1.2 Primary Containment and Reactor Vessel Isolation Control System (PCRVICS) - Instrumentation and Controls

7.1.2a.1.2.1 Safety Design Bases

7.1.2a.1.2.1.1 General Functional Requirements

The following functional design bases have been implemented in the primary containment and reactor vessel isolation control system:

(1) To limit the release of radioactive materials to the environs, the PCRVICS shall, with precision and reliability, initiate timely isolation of penetrations through the primary containment whenever the values of monitored variables exceed preselected operational limits.

(2) To provide assurance that important variables are monitored with a precision sufficient to fulfill Safety Design Basis (1), the PCRVICS shall respond correctly to the sensed variables over the expected design range of magnitudes and rates of change.

(3) To provide assurance that important variables are monitored to fulfill Safety Design Basis (1), a sufficient number of sensors shall be provided for monitoring essential variables.

(4) To provide assurance that conditions indicative of a failure of the RCPB are detected to fulfill Safety Design Basis (1), PCRVICS inputs shall be derived from variables that are true, direct measures of operational conditions.

(5) The time required to close the main steamline isolation valves shall be short to minimize the loss of coolant from a steamline break outside containment.

(6) The time required to close the main steamline isolation valves shall not be so short that inadvertent isolation of steamlines causes a transient more severe than that resulting from closure of the turbine stop valves coincident with failure of the turbine bypass system. This ensures that the main steam isolation valve closure speed is compatible with the ability of the RPS to protect the fuel assembly and RCPB.

(7) To provide assurance that the closure of automatic isolation valves is initiated when required to fulfill Safety Design Basis (1), the following safety design bases are specified for the systems controlling automatic isolation valves:

a. Any one failure, maintenance operation, calibration operation, or test to verify operational availability shall not impair the functional ability of the isolation control system.

b. The system shall be designed so that the required number of sensors for any monitored variable exceeding the isolation setpoint will initiate automatic isolation.

c. Where a plant condition that requires isolation can be brought on by a failure or malfunction of a control or regulating system, and the same failure or malfunction prevents action by one or more isolation control system channels designed to provide protection against the unsafe condition, the remaining portions of the isolation control system shall meet the requirements of Safety Design Bases (1), (2), (3), and (7)a.

d. The power supplies for the PCRVICS shall be arranged so that loss of one supply cannot prevent automatic isolation when required.

e. The system shall be designed so that, once initiated, automatic isolation action goes to completion. Return to normal operation after isolation action shall require deliberate operator action.

f. There shall be sufficient electrical and physical separation of wiring and piping between trip channels monitoring the same essential variable to prevent environmental factors, electrical faults, and physical events from impairing the ability of the system to respond correctly.

g. SSE ground motions shall not impair the ability of the PCRVICS to initiate automatic isolation.

(8) The following safety design basis is specified to assure that the isolation of main steamlines is accomplished:

a. The isolation valves in each of the main steamlines shall not rely on electrical power to achieve closure.

(9) To reduce the probability that the operational reliability of the PCRVICS will be degraded by operator error, the following safety design bases are specified for automatic isolation valves.

a. Access to all trip settings, component calibration controls, test points, and other terminal points for equipment associated with essential monitored variables shall be under the physical control or supervision of plant operations supervisory personnel.

b. The means for bypassing trip channels, trip logics, or system components shall be under the control of plant operations supervisory personnel. If the ability to trip some essential part of the system has been bypassed, this fact shall be continuously indicated in the control room.

(10) To provide the operator with a means to take action that is independent of the automatic isolation functions in the event of a failure of the RCPB, it shall be possible for the operator to manually initiate isolation of the primary containment and reactor vessel from the main control room.

(11) The following bases are specified to provide the operator with the means to assess the condition of the PCRVICS and to identify conditions indicative of a gross failure of RCPB.

a. The PCRVICS shall be designed to provide the operator with information pertinent to the status of the system.

b. Means shall be provided for prompt identification of trip channel and trip system responses.

(12) It shall be possible to check the operational availability of each trip channel and trip logic during reactor operation.

7.1.2a.1.2.2 Specific Regulatory Requirements

The specific regulatory requirements applicable to this system are shown in Tables 7.1-3 and 7.1-5. The degree of conformance to these requirements is discussed in the analysis section for this system.

7.1.2a.1.3 Emergency Core Cooling Systems – Instrumentation and Controls

7.1.2a.1.3.1 Safety Design Bases

7.1.2a.1.3.1.1 General Functional Requirements

The emergency core cooling systems (ECCS) control and instrumentation shall be designed to meet the following functional safety design bases:

(1) Automatically initiate and control the ECCS to prevent excessive fuel cladding temperatures.

(2) Respond to a need for emergency core cooling, regardless of the physical location of the malfunction or break that causes the need.

(3) The following safety design bases are specified to limit dependence on operator judgement in times of stress:

a. With one exception, the ECCS shall respond automatically so that no action is required of plant operators within 20 minutes after a LOCA. The only operator action assumed in the Section 6.3 ECCS analysis is that a RHR heat exchanger is placed in service within 20 minutes into the accident.

b. The performance of the ECCS shall be indicated by main control room instrumentation.

c. Facilities for manual control of the ECCS shall be provided in the main control room.

7.1.2a.1.3.1.2 Specific Regulatory Requirements

The specific regulatory requirements applicable to this system are shown in Tables 7.1-3, 7.1-6 and 7.1-7. The degree of conformance to these requirements is discussed in the analysis section for this system.

7.1.2a.1.4 Neutron Monitoring System - Instrumentation and Controls

7.1.2a.1.4.1 Source Range Monitor (SRM) Subsystem

This control system is not required for safety.

7.1.2a.1.4.1.1 Power Generation (Non-Safety) Design Bases

The source range monitor (SRM) subsystem meets the following power generation design bases:

(1) Neutron sources and neutron detectors together shall result in a signal-to-noise ratio of at least 2:1 and a count rate of at least three counts per second with all control rods fully inserted prior to initial power operation.

(2) The SRM shall be able to perform the following functions:

a. Indicate a measurable increase in output signal from at least one detecting channel before the reactor period is less than 20 seconds during the worst possible startup rod withdrawal conditions.

b. Indicate substantial increases in output signals with the maximum permitted number of SRM channels out of service during normal reactor startup operations.

c. The SRM channels shall be on scale when the IRM first indicates neutron flux during a reactor startup.

d. Provide a measure of the time rate of change of the neutron flux (reactor period) for operational convenience.

e. Generate interlock signals to block control rod withdrawal if the count rate exceeds a preset value or falls below a preset limit (if the IRMs are not above the second range) or if certain electronic failures occur.

(3) Perform its function in the maximum normal thermal and radiation environment.

(4) Loss of a single power bus will not disable the monitoring and alarming functions of all the available monitors.

7.1.2a.1.4.2 Intermediate Range Monitor (IRM) Subsystem

7.1.2a.1.4.2.1 Safety Design Basis

The IRM generates a trip signal that can be used to prevent fuel damage resulting from anticipated or abnormal operational transients that occur while operating in the intermediate power range. The independence and redundancy incorporated in the design of the IRM is consistent with the safety design bases of the RPS.

7.1.2a.1.4.2.2 Specific Regulatory Requirements

The specific regulatory requirements applicable to this system are shown in Table 7.1-3. The degree of conformance to these requirements is discussed in the analysis section for this system.

7.1.2a.1.4.2.3 Power Generation (Non-Safety) Design Bases

The IRM generates an interlock signal to block rod withdrawal if the IRM reading exceeds a preset value or if the IRM is not operating properly. The IRM is designed so that overlapping neutron flux indications exist with the SRM and APRM subsystems.

7.1.2a.1.4.3 Local Power Range Monitor (LPRM) Subsystem

7.1.2a.1.4.3.1 Safety Design Basis

The LPRMs provide input to the APRM Subsystem (see Subsection 7.1.2a.1.4.4) and the OPRM Subsystem (see Subsection 7.1.2a.1.4.7).

7.1.2a.1.4.3.2 Power Generation (Non-Safety) Design Bases

The LPRM supplies:

(1) Signals to the APRM that are proportional to the local neutron flux at various locations within the reactor core;

(2) Signals to alarm high or low local neutron flux;

(3) Signals proportional to the local neutron flux to drive indicating meters and auxiliary devices to be used for operator evaluation of power distribution, local heat flux, minimum critical power ratio and fuel burnup rate;

(4) Signals to the RBM to indicate changes in local relative neutron flux during the movement of control rods.

7.1.2a.1.4.4 Average Power Range Monitor (APRM) Subsystem

7.1.2a.1.4.4.1 Safety Design Basis

Under the worst permitted input LPRM bypass conditions, the APRM is capable of generating a trip signal in response to average neutron flux increases (or thermal-hydraulic instability caused by Power Oscillations) in time to prevent fuel damage. The independence and redundancy incorporated into the design of the APRM is consistent with the safety design bases of the reactor protection system.

The APRM provides power level and drive flow signals to the OPRM.

7.1.2a.1.4.4.2 Specific Regulatory Requirements

The specific regulatory requirements applicable to this system are shown in Table 7.1-3. The degree of conformance to these requirements is discussed in the analysis section for this system.

7.1.2a.1.4.4.3 Power Generation (Non-Safety) Design Basis

The APRM provides the following functions:

(1) A continuous indication of average reactor power (neutron flux) from a few percent to 125% of rated reactor power;

(2) Interlock signals for blocking further rod withdrawal to avoid an unnecessary scram actuation;

(3) A reference power level for controlling reactor recirculation system flow;

(4) A reactor thermal power signal derived from each APRM channel which approximates the dynamic effects of the fuel;

(5) A reference power level for the Rod Block Monitor subsystem.

7.1.2a.1.4.5 Traversing Incore Probe (TIP) Subsystem

This control system is not required for safety. See Subsections 7.7.1.6 and 7.7.2.6.

7.1.2a.1.4.5.1 Power Generation Design Bases

The TIP subsystem meets the following power generation design bases:

(1) Provide a signal proportional to the axial neutron flux distribution at selected axial intervals over the regions of the core where LPRM detector assemblies are located. This signal shall be of high precision to allow reliable calibration of LPRM gains.

(2) Provide accurate indication of the position of the flux measurement to allow pointwise or continuous measurement of the axial neutron flux distribution.

7.1.2a.1.4.6 Rod Block Monitor (RBM) Subsystem

This subsystem is not required for safety. See Subsections 7.7.1.11 and 7.7.2.11.

7.1.2a.1.4.6.1 Power Generation (Non-Safety) Design Bases

The rod block monitor (RBM) subsystem meets the following power generation design bases:

(1) Prevent local fuel damage that may result from a single rod withdrawal error.

(2) Provide a signal used by the operator to evaluate the change in the local relative power level during control rod movement.

7.1.2a.1.4.7 Oscillation Power Range Monitor (OPRM) Subsystem

7.1.2a.1.4.7.1 Safety Design Basis

Under the limiting input LPRM bypass conditions, the OPRM is capable of generating a trip signal in response to the thermal-hydraulic induced neutron flux instabilities in time to prevent fuel damage. The independence and redundancy incorporated into the design of the OPRM is consistent with the safety design of the reactor protection system.

The OPRM RPS trip function is enabled when the reactor is in a low flow-high power configuration. Exact limits for this region are specified in the Core Operating Limits Reports (COLR).

7.1.2a.1.4.7.2 Specific Regulatory Requirements

The specific regulatory requirements applicable to this system are shown in Table 7.1-3. The degree of conformance to these requirements is discussed in the analysis section for this system.

7.1.2a.1.5 Refueling Interlocks - Instrumentation and Controls

Refueling interlocks are not required for safety. See Subsections 7.7.1.10 and 7.7.2.10.

7.1.2a.1.6 Reactor Manual Control System – Instrumentation and Controls

This system is not required for safety. See Subsections 7.7.1.2 and 7.7.2.2.

7.1.2a.1.6.1 Specific Regulatory Requirements

The specific regulatory requirements applicable to this system are shown in Table 7.1-3. The degree of conformance to these requirements is discussed in the analysis section for this system.

The OPRM provides signals to the plant computer indicating process and conditions and OPRM data for operator evaluation.

7.1.2a.1.6.2 Power Generation (Non-Safety) Design Bases

The reactor manual control system is designed to meet the following power generation design bases:

(1) Inhibit control rod withdrawal following erroneous control rod manipulations so that reactor protection system action (scram) is not required.

(2) Inhibit control rod withdrawal in time to prevent local fuel damage as a result of erroneous control rod manipulation.

(3) Inhibit control rod movement whenever such movement would result in operationally undesirable core reactivity conditions or whenever instrumentation is incapable of monitoring the core response to rod movement.

(4) Limit the potential for inadvertent rod withdrawals leading to reactor protection system action by designing the reactor manual control system in such a way that deliberate operator action is required to effect a continuous rod withdrawal.

(5) Provide the operator with the means to achieve prescribed control rod patterns, and provide information pertinent to the position and motion of the control rods in the main control room.

7.1.2a.1.7 Through 7.1.2a.1.10

These subsections were not used.

7.1.2a.1.11 Process Radiation Monitoring System - Instrumentation and Controls

7.1.2a.1.11.1 Main Steamline Radiation Monitoring Subsystem

7.1.2a.1.11.1.1 Safety Design Basis

The main steamline radiation monitoring subsystem is designed to meet the following safety design bases:

(1) The subsystem is able to detect a gross release of fission products from the fuel under any anticipated operating combination of main steamlines.

(2) The subsystem shall indicate a gross release of fission products from the fuel.

(3) On detection of a gross release of fission products from the fuel:

a. The subsystem shall initiate a main control room annunciator (alarm).

b. The subsystem shall provide the trip signal to the PCRVICS to isolate the containment via the reactor coolant sample valves. The subsystem shall trip the Mechanical Vacuum Pump (MVP) and isolate its suction valves.

7.1.2a.1.11.1.2 Specific Regulatory Requirements

The specific regulatory requirements applicable to this system are shown in Tables 7.1-3 and 7.1-8. The degree of conformance to these requirements is discussed in the analysis section for this system.

7.1.2a.1.11.1.3 Power Generation (Non-Safety) Design Basis

The main steamline radiation monitoring subsystem is designed to display in the main control room an indication of gross gamma radiation level at the main steam tunnel.

7.1.2a.1.12 through 7.1.2a.1.17

These subsections were not used.

7.1.2a.1.18 Reactor Core Isolation Cooling (RCIC) System – Instrumentation and Controls

7.1.2a.1.18.1 Safety Design Bases

(1) The system is capable of maintaining sufficient coolant in the reactor vessel in case of an isolation with a loss of main feedwater flow.

(2) Provisions are made for automatic and remote manual operation of the system.

(3) Components of the RCIC system are designed to satisfy Seismic Category I design requirements.

(4) To provide a high degree of assurance that the system shall operate when necessary, the power supply for the system is from immediately available energy sources of high reliability.

(5) To provide a high degree of assurance that the system shall operate when necessary, provision is made so that periodic testing can be performed during plant operation.

7.1.2a.1.18.2 Specific Regulatory Requirements

RCIC is considered a Safe Shutdown System rather than an ECCS. The specific regulatory requirements applicable to this system are shown in Table 7.1-3. The degree of conformance to these requirements is discussed in the analysis section for this system.

7.1.2a.1.19 Standby Liquid Control System (SLCS) - Instrumentation and Controls

7.1.2a.1.19.1 Safety Design Basis

This system is capable of shutting the reactor down from full power to cold shutdown and maintaining the reactor in a subcritical state at atmospheric temperature and pressure conditions by pumping sodium pentaborate, a neutron absorber, into the reactor.

The system will also be used to buffer suppression pool pH to prevent Iodine re-evolution following a postulated design basis loss of coolant accident.

7.1.2a.1.19.2 Specific Regulatory Requirements

The specific regulatory requirements applicable to this system are shown in Table 7.1-3. The degree of conformance to these requirements is discussed in the analysis section for this system.

7.1.2a.1.19.3 Power Generation (Non-Safety) Design Basis

There are no power generation bases for this system.

7.1.2a.1.20 through 7.1.2a.1.23

These subsections are not used.

7.1.2a.1.24 NSSS Leak Detection System – Instrumentation and Controls

7.1.2a.1.24.1 Reactor Coolant Pressure Boundary Leakage Detection

7.1.2a.1.24.1.1 Safety Design Bases

The safety design bases for the leak detection systems are as follows:

(1) Signals are provided to permit isolation of abnormal leakage before the results of this leakage become unacceptable.

(2) The unacceptable results are as follows:

a. A threat of significant compromise to the reactor coolant pressure boundary.

b. A leakage rate in excess of the coolant makeup capability to the reactor vessel.

7.1.2a.1.24.1.2 Specific Regulatory Requirements

The specific regulatory requirements applicable to this system are shown in Tables 7.1-3 and 7.1-9. The degree of conformance to these requirements is discussed in the analysis section for this system.

7.1.2a.1.24.1.3 Power Generation (Non-Safety) Design Basis

A means is provided to detect abnormal leakage from the RCPB.

7.1.2a.1.25 RHRS - Reactor Shutdown Cooling Subsystem – Instrumentation and Controls

7.1.2a.1.25.1 Safety Design Bases

The reactor shutdown cooling mode function of the RHR system is designed to meet the following functional design bases:

(1) Instrumentation and controls are provided that will enable the system to remove the residual heat (decay heat and sensible heat) from the reactor vessel during normal shutdown.

(2) Manual controls of the shutdown cooling system are provided in the main control room and the remote shutdown panel.

(3) Performance of the shutdown cooling system is indicated by main control room instrumentation and similar instrumentation in the remote shutdown panel.

7.1.2a.1.25.2 Specific Regulatory Requirements

The specific regulatory requirements applicable to this system are shown in Table 7.1-3. The degree of conformance to these requirements is discussed in the analysis section for this system.

7.1.2a.1.25.3 Power Generation (Non-Safety) Design Bases

The reactor shutdown cooling mode of the residual heat removal system (RHR) shall meet the following power generation design bases:

(1) Provide cooling for the reactor during the shutdown operation when the vessel pressure is below approximately 100 psig.

(2) Cool the reactor water to a temperature which is practical for refueling and servicing operation.

(3) Provide means for reactor head cooling by diverting part of the shutdown flow to a nozzle in the vessel head. This flow will condense the steam generated from the hot walls of the vessel while it is being flooded, thereby keeping system pressure down.

7.1.2a.1.26 through 7.1.2a.1.29

These subsections are not used.

7.1.2a.1.30 ATWS Mitigation Capability – Instrumentation and Controls

7.1.2a.1.30.1 Special Event Design Basis

The ability of the plant to accommodate anticipated transient without scram is defined and examined in Section 15.8 and Appendix 15A (Event 51).

Mitigation of an ATWS event resulting from an electrical or electromechanical failure of the Reactor Protection System is accomplished by the ATWS-Recirculation Pump Trip System (ATWS-RPT) and by the Alternate Rod Injection (ARI) System. These systems are capable of reducing reactivity by (1) tripping the recirculation pumps via the ATWS-RPT system, and (2) providing an alternate means (ARI) to rapidly insert the control rods to achieve and maintain a subcritical configuration.

The specific design basis requirements for these systems are given in License Topical Report NEDE-31096-A and in Subsection 7.2.3.

7.1.2a.1.30.2 Specific Regulatory Requirements

Regulatory requirements for ATWS-RPT and ARI systems are given in 10CFR50.62. The degree of conformance to these requirements is discussed in the analysis sections for these systems.

7.1.2a.1.31 Safety-Related Display - Instrumentation

7.1.2a.1.31.1 Safety Design Basis

The necessary display instrumentation shall be available to reactor operator in the main control room to determine and accomplish all the required manual control actions consistent with safe plant operation.

7.1.2a.1.31.2 Specific Regulatory Requirements

The specific regulatory requirements applicable to this system are shown in Table 7.1-3. The degree of conformance to these requirements is discussed in the analysis section for this system.

7.1.2a.1.31.3 Power Generation (Non-Safety) Design Basis

Sufficient and reliable display instrumentation shall be provided such that all the expected power operation actions and maneuvers can be reasonably accomplished by the reactor operator from the main control room.

7.1.2a.1.32 through 7.1.2a.1.34

These sections were not used.

7.1.2a.1.35 RHRS - Containment Spray Cooling System - Instrumentation and Controls

7.1.2a.1.35.1 Safety Design Basis

The containment spray cooling mode function of the RHR system is designed to meet the following functional safety design bases:

a. Instrumentation and controls are provided that will sense containment and drywell pressures and enable the system to provide condensation of steam in the containment air volume during a transient or accident event.

b. All manual controls of the containment spray subsystem are provided in the control room.

c. Performance of the containment spray subsystem is indicated by control room instrumentation.

7.1.2a.1.35.2 Specific Regulatory Requirements

The specific regulatory requirements applicable to this system are shown in Table 7.1-3. The degree of conformance to these requirements is discussed in the analysis section for this system.

7.1.2a.1.35.3 Power Generation Design Basis

There are no Power Generation Design Basis for the RHR Containment Spray Cooling System.

7.1.2a.1.36 This subsection is not used.

7.1.2a.1.37 Recirculation Pump Trip (RPT) - Instrumentation and Controls

7.1.2a.1.37.1 Safety Design Bases

The Recirculation Pump Trip is designed to meet the following safety design bases:

(1) Instrumentation and controls are provided that will cause both recirculation pumps to trip when the main turbine trips or a generator load rejection occurs. The RPT will occur automatically in order to ensure that the reactor core remains within the conservative thermal hydraulic limits during certain abnormal operational transients.

(2) Operational performance is indicated by main control room instrumentation.

7.1.2a.1.37.2 Specific Regulatory Requirements

The specific regulatory requirements applicable to this system are shown in Table 7.1-3. The degree of conformance to these requirements is discussed in the analysis section for this system.

7.1.2a.1.37.3 Power Generation (Non-Safety) Bases

There are no power generation bases for this system.

7.1.2a.1.38 RHRS - Suppression Pool Cooling System - Instrumentation and Controls

7.1.2a.1.38.1 Safety Design Bases

Instrumentation and controls are provided to allow the reactor operator to manually initiate suppression pool cooling to ensure that the pool temperature immediately after any relief valve discharge to the pool does not exceed the pre-established pool temperature limit.

7.1.2a.1.38.2 Specific Regulatory Requirements

The specific regulatory requirements applicable to this system are shown in Table 7.1-3. The degree of conformance to these requirements is discussed in the analysis section for this system.

7.1.2a.1.38.3 Power Generation (Non-Safety) Design Basis

There are no power generation design bases for this system.

7.1.2b.1 Identification of Safety Criteria for non-NSSS, General

Design bases for all the safety related instrumentation of the systems are presented in the section of this chapter that discusses the system to which the bases apply.

Certain Non-NSSS ESF systems conform to the following:

(1) ESF systems generally conform to IEEE Standard 279-1971. Detailed discussion of extent of conformance is in Subsections 7.3.1b and 7.3.2b.

(2) The Operational Quality Assurance program is discussed in Section 17.2.

(3) General design criteria for nuclear power plants, Appendix A of 10CFR50, as described in Section 3.1 and in Subsection 7.3.2b.

(4) Extent of compliance to specific IEEE standards is discussed in Subsection 7.1.2.5.

(5) Extent of compliance to specific regulatory guides is discussed in Subsection 7.1.2.6.

7.1.2a.2 Mechanical Systems Separation Criteria

7.1.2a.2.1 General

(1) Separation of the affected mechanical systems and equipment is accomplished so that the substance and intent of the General Design Criteria of 10 CFR 50 Appendix A are fulfilled.

(2) Consideration is given to the redundant and diverse requirements of the affected systems.

(3) Consideration is given to the type, size, and orientation of possible breaks of the reactor coolant pressure boundary specified in Subsection 3.6.2.

(4) The protection afforded by the safety-related network satisfies the single active component failure criterion. A single active component failure is an occurrence which results in the loss of capability of a component to perform its intended safety functions. Multiple failures resulting from a single occurrence are considered to be part of the single failure. Fluid systems are considered to be designed against an assumed single failure if a single failure of any active component (assuming passive components function properly) does not result in a loss of capability of the system to perform its safety function.

(5) Redundant systems are separated from each other so that single failure of a component or channel will not interfere with the proper operation of its redundant/diverse counterpart.
The affected mechanical systems and equipment are separated so that systems important to safety are protected from the following hazards:

a) The pipe break dynamic effects outlined in Section 3.6

b) Environmental effects as a result of pipe breaks and as outlined in Section 3.11

c) Flooding effects as a result of pipe breaks and as outlined in Section 3.11

d) Missiles as defined in Section 3.5

e) Fires capable of damaging redundant mechanical safety equipment.

The need for and adequacy of separation to protect the safety equipment from the hazards are determined in conjunction with the criteria specified in Sections 3.4, 3.5, 3.6, 3.11, and 9.5.

7.1.2a.2.1.1 Separation Techniques

The methods used to protect redundant safety systems from the design basis hazards fall into four categories of separation techniques: plant arrangement, barriers, spatial separation, and alternatives.

a) Plant Arrangement

A basic design consideration of plant layout is that redundant divisions of a safety system should not share common equipment areas. However, equipment common to a particular safety system division can share a common area if that equipment does not constitute a hazard within itself to another safety system of the same division.

As an example, failure of a safety related pipe in Division I should not result in a failure of a pipe in Division II and vice versa.

Failure of any non-safety-related structure system or component shall not result in failure of any safety-related structures, system, or component.

To accomplish separations through plant arrangement, redundant divisions of a safety system may be placed in different compartments or even on different elevations. Non-safety equipment, components, or piping should not be run above safety equipment unless they are adequately restrained or it can be demonstrated that failure will not impair function of the safety equipment.

b) Barriers

Barriers are most often used in restricted areas where a particular hazard (e.g., small turbine missiles) is more easily identified or where other techniques are inappropriate (e.g., separation between control boards). Separation by barriers is an extension of separation by the use of compartments in plant arrangement.

Separation was also accomplished through the use of suitably designed equipment that in itself acts as a barrier. Examples would be heavily constructed control boards or heavy wall conduits and enclosed cable trays. In many cases, the barrier may enclose the hazard (e.g., a compartment around a high-speed turbine driven pump) in lieu of effecting a direct separation between redundant systems.

c) Spatial Separation

Spatial separation is another method of separating redundant safety systems and protecting them from the hazards described in Subsection 3.12.2.1.1.

For example, in areas where a barrier would be impractical, piping has been rerouted so that energy from a jet resulting from a break would be dissipated by the distance traveled. In this example, partial barriers or restraints could also be used, as well as by hardening design (e.g., heavier housing construction) of system components within the hazard area. When it can be shown that a hazard would have only a certain sphere of effectiveness (e.g., for pipe whip, a rotation about a plastic hinge at the next restraint), spatial separation is considered adequate.

d) Alternatives

When one of the above techniques is impractical, a suitable alternative is used, some of which are additional restraints, hardening design, or temporary system isolation under accident conditions. When the redundant safety component cannot be held safe from common hazards by the alternatives outlined above, more resistant components are selected. An example would be the use of high pressure piping in a low pressure safety system to ensure its ability to withstand the effect of a break in adjacent high pressure lines.

7.1.2a.2.2 System Separation Criteria

Piping for a redundant safety system is run independently of its counterparts, unless it can be shown that no single credible event, e.g., LOCA is capable of causing piping failure that could prevent reactor shutdown. Supports and restraints of redundant mechanical components and piping are not shared, unless such sharing does not significantly impair their ability to perform their safety function.

Penetrations to the primary containment are separated or other adequate provisions are made so that the initial break of one piping branch of a system does not render its redundant counterpart(s) inoperable.

7.1.2a.2.3 Physical Separation

(1) Mechanical equipment and piping are separated from each other so that single failure of a device or component will not interfere with the proper operation of its redundant/diverse counterpart.

(2) The ADS system is separated from the HPCI system such that no break location within the normally pressurized portion of the HPCI steam line can damage any component considered essential to the operation of either redundant division of ADS.

(3) The coolant injection portions of the ECCS are separated into the following functional groups:

a. HPCIS + 1 CSS + 1 LPCIS + with one RHR heat exchanger and 100% service water.

b. 1 CSS + 1 LPCIS + with one RHR heat exchanger and 100% service water.

(4) The equipment in each group is separated from that in the other group by the required practical distance. In addition, the HPCI and the RCIC systems are adequately separated.

(5) Separation barriers are constructed between the functional groups as required to assure that environmental disturbances (such as fire, flood, pipe rupture phenomena, falling objects, etc.) affecting one functional group will not affect the remaining groups. In addition, separation barriers are provided as required to assure that such disturbances do not affect both the RCIC and HPCI systems.

7.1.2a.3 Electrical Systems Separation Criteria

7.1.2a.3.1 General

(1) Separation of the affected electrical systems and equipment is accomplished so that the substance and intent of IEEE 279-1971, 10CRF50 Appendix A, General Design Criteria 3, 17 and 21 are fulfilled as further clarified and limited below.

(2) Consideration is given to the redundant and diverse requirements of the affected systems.

(3) The protection afforded by the safety-related network satisfies the single active component failure criterion. A single active component failure is an occurrence which results in the loss of capability of a component to perform its intended safety functions. Multiple failures resulting from a single occurrence are considered to be part of the single failure.

(4) Redundant systems are separated from each other so that single failure of a component or channel will not interfere with the proper operation of its redundant/diverse counterpart.

(5) The need for and adequacy of separation to protect the safety equipment from the above hazards are determined in conjunction with the criteria specified in Section 3.12.

(6) The affected electrical systems and equipment are separated so that systems important to safety are protected from the following hazards:

a) Fires in cable raceways due to an electrical fault that could cause failure of insulation of other cables.

b) Gross failure of electrical equipment in a single compartment of a control panel

c) Mechanical damage of electrical equipment in a single location.

d) Single Design Basis event, such as earthquake.

7.1.2a.3.1.1 Separation Techniques

The methods used to protect redundant safety systems from the design basis hazards fall into two categories of separation techniques: safety class structures, spatial separation.

a) Safety Class Structure

Basic design of plant layout is performed such that redundant circuits and equipment are located in separate areas or rooms insofar as practical.

The separation of Class 1E circuits and equipment are such that the required independence will not be compromised by the failure of mechanical systems served by the Class 1E electrical system. For example, Class 1E circuits are routed or protected such that failure of related mechanical equipment of one redundant system can not disable Class 1E circuits or equipment essential to the operation of the other redundant systems. The separation of Class 1E circuits and equipment make effective use of features inherent in the plant design such as using different rooms or opposite side of rooms or areas.

b) Spatial Separation

Spatial separation and/or protective barriers are such that no locally generated force or missile can destroy redundant RPS or ESF functions. In the absence of confirming analysis to support less stringent requirements, the following rules apply:

1. In rooms or compartments having heavy rotating machinery, such as the turbine-generator, or the reactor feedwater system pumps, or in rooms containing high-pressure feedwater piping, or high-pressure steam lines such as those between the reactor and the turbine, a minimum separation of 20 feet or a 6 inch thick reinforced concrete wall is required between trays containing cables of different divisions.

2. Any redundant switchgear, associated with two redundant RPS or ESF's and located in a potential mechanical damage zone such as discussed above, must have a minimum horizontal separation of 20 feet or must be separated by a protective wall equivalent to a 6 inch thick reinforced concrete wall.

3. In any compartment containing an operating crane, such as the turbine building main floor and the region above the reactor pressure vessel, there must be a minimum horizontal separation of 20 feet or a 6 inch thick reinforced concrete wall between trays containing cables from different divisions.

4. Plant area for spacial separation is discussed in Section 3.12.

5. Cable spreading room area for spacial separation is discussed in Section 3.12.

6. NSSS Main Control Room and Relay Room Panels

   a) The protection system and ESF control, relay and instrument panels/racks are located in safety class structures. Redundant protective systems and ESF panels and racks are located in different areas thus avoiding a potential source of missiles or pipe break energy release that could destroy redundant safety functions. Where this is not possible suitable barriers are provided between the panels/racks and potential missile and the effects of a pipe break.

   b) Control, relay and instrument panels/racks are designed in accordance with the following general criteria to preclude the possibility of fire propagating between redundant circuits whose loss would prevent safe shutdown of the plant:

      i. Single panels or instrument racks do not contain circuits or devices of the redundant protection system of ESF systems except:

         Certain operator interface control panels have operational considerations which dictate that redundant protection system or ESF system circuits or devices be located on a single panel. These circuits and devices are separated horizontally and vertically by a minimum distance of 6 inches or by steel barriers, or enclosures.

      ii. Certain panels contain redundant RPS or ESF circuits due to system requirements. In these panels the 6 inch separation required in panel wiring is implemented wherever possible. Where an exception to 6 inch separation exists, for example at logic relays accepting signals from more than one division, one of the two division's wiring is run in conduit. Another exception is the Neutron Monitoring system.

         These exceptions are covered by General Electric Licensing Topical Report NEDO-10139, "Compliance of Protection Systems to Industry Criteria: General Electric BWR Nuclear

Steam Supply System," dated June, 1970 which presents an analysis for each safety system relay panel bay containing wiring from redundant divisions used in developing the combinational logic for the design. This report was specifically prepared to describe panels for BWR/4 type plants. The analysis is performed for panels without barriers and without regard to spatial separation and evaluates the loss of an entire safety system relay panel bay considering all combinations of open circuit and short circuit to either ground or power circuits. The report concludes that no safety functions are prevented following complete loss of such a bay.

iii. Where the above separation methods (i) or (ii) are not feasible, one of the separation group circuits are to be covered with a qualified non-metallic barrier material. A description of the materials and analysis to regulatory requirements is provided in Subsection 3.13 (conformance to Regulatory Guide 1.75).

iv. If two panels containing circuits of different separation divisions are less than 3 feet apart, there is a steel barrier between the two panels. Panel ends closed by steel end plates are considered to be acceptable barriers provided that terminal boards and wireways are spaced a minimum of one inch from the end plate.

v. Panel-to-floor fireproof barriers are provided between adjacent panels of different divisions, and divisional equipment on the same panel.

vi. Penetration of separation barriers within a subdivided panel is permitted, provided that such penetrations are sealed or otherwise treated so that fire generated by an electrical fault could not reasonably propagate from one section to the other and disable a protective function.

7.1.2a.3.2 Identification

Major electrical equipment of safety-related systems shall be identified so that two facts are physically apparent to operating and maintenance personnel: first, the equipment is part of the RPS or ESF equipment; and second, the grouping (or division) of enforced segregation with which the equipment is associated. Identification and division assignment conform to the following:

(1) Panels and Racks

Panels and racks associated with the RPS or ESF shall be labeled with marker plates which are conspicuously different from those for other similar panels; the difference may be in color, shape, or color of engraving-fill. The marker plates include identification of the proper division of the equipment as listed in Table 3.12-1.

(2) Junction or Pull Boxes

Junction and/or pull boxes enclosing wiring for the RPS or ESF have identification similar to and compatible with the panels and racks considered above.

(3) Cables

Cables external to cabinets and/or panels for the RPS or ESF are marked to distinguish them from other cables and identify their separation division as applicable. This identification requirement does not apply to individual conductors.

(4) Raceways

Those trays or conduits which carry RPS or ESF wiring are identified at entrance points of each room through which they pass (and exit points unless the room is small enough to facilitate convenient following of cable) with a permanent marker identifying their assigned division.

(5) Sensory Equipment Grouping and Designation Letters

Redundant sensory equipment for RPS or ESF are identified by suffix letters in accordance with Table 7.1-10 for RPS, and other deenergize to operate systems, Table 7.1-12 for ECCS, RCIC and other energize to operate systems and Table 7.1-11 for the Neutron Monitoring System. These tables also show the allocation of sensors to their separated divisions.

(6) PGCC Cables and Raceways
Cables and raceways are marked at the entrance to and exit from the PGCC floor sections and at 10 foot intervals within the floor sections. Class 1E raceways within the PGCC floor sections are identified prior to the installation of their cables.

The marking device is a permanent color coded band to distinguish between redundant Class 1E cables and non-Class 1E cables.

7.1.2a.3.3 System Separation Requirements

7.1.2a.3.3.1 Reactor Protection System (RPS)

(1) RPS cables are run in rigid or flexible metal conduits (if the conduits are qualified as a short circuit protection barrier able to carry ground current of 30 amps for 30 seconds) except 3 out of 4 channels of the RPS sensing circuits, located in the turbine building, are routed through a short length (40'-100') PVC embedded conduits. A ground fault return conductor capable of carrying 30 amps for 30 seconds is routed with each embedded conduits. Conduits or raceways containing neutron monitoring sensor cables (SRM, IRM, and LPRM) must be run in their own covered raceways which contain no other RPS cables. Cable installation beneath the reactor vessel is described in Section 8.1.6.1 (Regulatory Guide 1.75 (1/75), Part 15).

(2) Wiring to duplicate sensors on a common process tap is run in separate raceways to their separate destinations even though there is a functionally redundant set of sensors on a redundant process tap.

(3) Wiring for sensors of more than one variable in the same trip channel may be run in the same divisional raceway.

(4) Wires from the RPS trip system to a single group of scram solenoids may be run in a single raceway. A single raceway does not contain wires to more than one group of scram solenoids. RPS raceways contain only RPS wires.

(5) Cables through the primary containment penetrations are so grouped that failure of all cabling in a single penetration cannot prevent a scram. (This applies also to the neutron monitoring sensor cables and the main steam isolation valves position switch cables.)

(6) Power supplies to systems which de-energize to operate (so called "fail-safe" power supplies) require only that separation which is deemed prudent to assure availability. Therefore, the protection system fly-wheel motor generator (MG) sets, load circuit breakers and power wiring are not required to comply with these separation requirements event though the power is wired to separated panels.

(7) The RPS has a minimum of four independent input instrument channels for each measured variable.

(8) The RPS wiring is run and/or protected such that no common source of potentially damaging energy (e.g., electrical fire in non-RPS wireways, malfunction of plant equipment, pipe rupture, etc.) could reasonably result in loss of ability to scram when required.

7.1.2a.3.3.2 Emergency Core Cooling System (ECCS) and Nuclear Steam Supply Shutoff System (NSSSS)

(1) Separation is such that no single failure can prevent operation of an engineered safeguard function. Redundant (even dissimilar) systems may be required to perform the required function to satisfy the single failure criterion. Nuclear Steam

Supply Shutoff System fail-safe circuits which de-energize to operate follow the cable separation requirements described in Subsection 7.1.2a.3.3.1.

(2) The inboard and outboard NSSSS isolation valves are backups for each other so they must be independent of and protected from each other to the extent that no single failure can prevent the operation of at least one of an inboard/outboard pair.

(3) Isolation valve circuits require special attention because of their function in limiting the consequences of a pipe break outside the primary containment. Isolation valve control and power circuits shall be protected from the pipe lines that they are responsible for isolating as follows:

a. Essential isolation valve wiring in the vicinity of the outboard valve (or downstream of the valve) is installed in conduit and routed such as to take advantage of the mechanical protection afforded by the valve operator or other available structural barriers not susceptible to disabling damage from the pipe line break. Additional mechanical protection (barriers) are interposed as necessary.

b. Divisional Assignment

MOVs which have a mechanical check valve backup for their isolation function are included in the division which embraces the system in which the valves are located rather than adhering strictly to the inboard/outboard divisional classification.

7.1.2a.3.3.3 Steam Leakage Zone

Electrical equipment and raceways for systems listed in Subsection 7.1.2a.2.3 avoid location in a steam leakage zone insofar as practical, or are designed for short-term exposure to the high temperature and humidity associated with a steam leak.

7.1.2a.3.3.4 Suppression Pool Level Swell Zone

Any electrical equipment and/or raceways for RPS or ESF located in this zone are designed to satisfactorily complete their function before being rendered inoperable due to exposure to the environment created by the level swell phenomena.

7.1.2a.3.3.5 Penetrations

Penetrations are so arranged that no design basis-event can disable cabling in more than one penetration assembly. Penetrations contain cables of one divisional assignment only.

7.1.2a.3.3.6 Power Generation Control Complex - (PGCC)

Detailed description and safety evaluation aspects for a typical PGCC System are presented in GE-Topical Report: "Power Generation Control Complex; NEDO-10466A" and its amendments.

The PGCC rooms include control panels, connectors, floor sections, and termination cabinets. The floor sections are divided into ducts and the termination cabinets have metallic barriers to separate redundant Class 1E wiring.

The floor section ducts are designed so that each duct acts as a raceway and has adequate fire barriers and will contain wiring of only one redundant circuit. The ducts have solid metal walls and floor and a removable solid metal cover.

7.1.2a.3.3.7 Annunciator and Computer

All annunciator and computer input circuits are classified as non-Class 1E circuits. The cable runs of these circuits are separated from Class 1E circuits by the minimum separation requirements specified in Section 3.12. However, these non-Class 1E circuits are not separated from Class 1E control circuits within 1E panels in which the non-Class 1E circuit derives its input, (e.g., circuit breaker auxiliary contact used for computer input) or within the PGCC assembly. These non-Class 1E instrument circuits are considered to be low energy and the probability of these non-Class 1E circuits providing a mechanism of failure to the Class 1E circuits is extremely low.

7.1.2a.3.3.8 Conformance to IEEE 384-1974, 1981

The safety-related systems described in Sections 7.2, 7.3, 7.4, and 7.6 meet the independence and separation criteria for redundant systems in accordance with IEEE 279, paragraph 4.6. IEEE 384 is not applicable to the original plant, however, the following features are provided:

The electrical power supply, instrumentation, and control wiring for redundant portions of safety related systems have physical separation to preserve redundance and ensure that no single credible event will prevent operation of the associated function. Credible events include, but are not limited to, the effects of short circuits, pipe rupture, pipe whip, high pressure jets, missiles, fire, earthquake, and falling objects, and are considered in the basic plant design.

The independence of tubing, piping, and control devices for safety-related controls and instrumentation is achieved by physical space or barriers between separation groups of the same protective function. In locations where a specific hazard exists (missile, jet, etc.) which could produce damage to safety-related controls and instrumentation, the physical separation or structural protection provided will be adequate to ensure that no multiple failures can result from a single common event.

IEEE 384-1981 is applicable to the safety-related systems in the Diesel Generator 'E' Facility.

The criteria and bases for the independence of electrical cable, including routing, marking and cable derating, are covered in Section 8.3, 7.1.2a.3.2(6) and 7.1.2a.3.3.6. Fire detection and protection in the areas where wiring is installed is covered in Subsections 9.5.1 and 7.1.2a.3.3.6.

7.1.2a.4 NSSS Instrument Errors

The design considers instrument drift, setability and repeatability in the selection of instrumentation and controls and in the determination of setpoints is provided to allow for instrument error. The safety limits and allowable values are listed in the plant Technical Specifications. The trip setpoints are listed in the Technical Requirements Manual. The amount of instrument error is determined by test and experience. The setpoint is selected based on the known error. The test frequency is greater on instrumentation that demonstrates a tendency to err.

7.1.2b.4 Non-NSSS Instrument Errors

Consideration of NSSS instrument errors applies to non-NSSS LOCA signal and diesel start. See Section 7.6 for discussion and references to NSSS sections which discuss initiation in core spray and RHR nuclear steam supply shutoff systems.

7.1.2.5 Conformance to Industry Standards

This section covers both NSSS and non-NSSS application of standards. Statements of conformance are indicated as to NSSS and/or non-NSSS applicability.

On June 6, 1987, a fifth diesel generator designated Diesel Generator 'E' was added to the standby power system as part of the onsite power system. The modification that added Diesel Generator 'E' was based on applicable codes and standards in effect on September 22, 1983. These later codes and standards are only applicable to the Diesel Generator E building and the modifications in the Diesel Generator A, B, C and D rooms to add the transfer points and interconnections.

7.1.2.5.1 Conformance to IEEE 279-1971

This discussion is presented on a system-by-system basis in the analysis portions of Sections 7.2, 7.3, 7.4, and 7.6.

7.1.2.5.2 Conformance to IEEE 308-1974

Conformance to IEEE 308-1974 is described in Section 8.1.6.1 (Regulatory Guide 1.9 and 1.32).

7.1.2.5.2.1 Conformance to IEEE 308-1980

The Diesel Generator 'E' Facility is designed in accordance with IEEE 308-1980.

7.1.2.5.3 Conformance to IEEE 323-1971

a) NSSS - Compliance with IEEE 323-1971: written procedures and responsibilities are developed for the design and qualification of all Class I electric equipment. This includes preparation of specifications, qualification procedures, and documentation for both NSSS supplies manufactured and NSSS supplies purchased Class I equipment. Qualification testing or analysis is accomplished prior to release of the engineering design for production. Standards manuals are maintained containing specifications, practices, and procedures for implementing qualification requirements, and an auditable file of qualification documents is available for review. See the Susquehanna SES Environmental Equipment Qualification Program.

b) Non-NSSS - See the Susquehanna SES Environmental Equipment Qualification Program.

7.1.2.5.3.1 Conformance to IEEE 323-1974

The Diesel Generator 'E' Facility equipment meets the requirements of IEEE 323-1974 as it applies to the mild environment in the diesel generator buildings.

7.1.2.5.4 Conformance to IEEE 336-1971

a) NSSS – Specifications include requirements for conformance to IEEE 336.

b) Non-NSSS refer to Section 3.13 for Regulatory Guide 1.30.

7.1.2.5.4.1 Conformance to IEEE 336-1980

The Diesel Generator 'E' Facility equipment meets the requirements of IEEE 336-1980. The Diesel Generator 'E' equipment is installed, inspected, and tested under the requirements of the Operational Quality Assurance Program as described in Section 17.2.

7.1.2.5.5 Conformance to IEEE 338-1971

This discussion is presented on a system by system basis in the analysis portion of Sections 7.2, 7.3.2a, 7.3.2b, 7.4, and 7.6.

7.1.2.5.5.1 Conformance to IEEE 338-1977

The Diesel Generator 'E' system and equipment meet the requirements of IEEE 338-1977.

7.1.2.5.6 Conformance to IEEE 344-1971

a) NSSS - All safety-related instrumentation and control equipment is classified as Seismic Category I, designed to withstand the effects of the safe shutdown earthquake (SSE) and remain functional during normal and accident conditions. Qualification and documentation procedures used for Seismic Category I equipment and systems meet the provisions of IEEE 344 as identified in Section 3.10a. See the Susquehanna SES Environmental Equipment Qualification Program.

b) Non-NSSS - See Subsection 8.1.6.2, Sections 3.10b and 3.10c. See the Susquehanna SES Environmental Equipment Qualification Program.

c) For those systems identified in Table 7.1-3, the supplemental requirements of Branch Technical Position EICSB 10, Electrical and Mechanical Equipment Seismic Qualification Program are applicable.

7.1.2.5.6.1 Conformance to IEEE 344-1975

The Diesel Generator 'E' equipment meets the requirements of IEEE 344-1975 as it applies to the diesel generator buildings. See Subsection 3.10b and 3.10c.

7.1.2.5.7 Conformance to IEEE 379-1972

a) NSSS - The extent to which the single failure criteria of IEEE 379 is satisfied is specifically covered in the analysis of each system to the requirements of IEEE 279, paragraph 4.2 - see Subsection 7.1.2.5.1.

b) Non-NSSS - See the analysis of systems to meet requirements of IEEE 279, paragraph 4.2 in Subsection 7.3.2b.2.

7.1.2.5.7.1 Conformance to IEEE 379-1977

The Diesel Generator 'E' system and equipment are designed so that whenever the Diesel Generator 'E' is aligned to the Class 1E electrical system, the Class 1E electrical system still meets the single failure criteria as discussed in paragraph 4.2 in Subsection 7.3.2b.2.

7.1.2.5.8 Conformance to IEEE 384-1974

a) NSSS - Refer to Subsection 7.1.2a.3.3.8.

b) Non-NSSS - Refer to Section 3.12.

7.1.2.5.8.1 Conformance to IEEE 384-1981

The Diesel Generator 'E' equipment meets the requirements of IEEE 384-1981.

7.1.2.6 Conformance to Regulatory Guides

This section covers both NSSS and non-NSSS application of regulatory guides. Statements of conformance are indicated as to NSSS and/or non-NSSS applicability.

7.1.2.6.1 Conformance to Regulatory Guide 1.6 (3/10/71)

Refer to Subsection 8.1.6.1, paragraph a and Section 3.13.

7.1.2.6.2 Conformance to Regulatory Guide 1.9 (5/10/71)

Refer to Section 3.13 and Subsection 8.1.6.1, paragraph b.

7.1.2.6.2.1 Conformance to Regulatory Guide 1.9 (December 1, 1979)

For conformance of the Diesel Generator 'E' equipment to Regulatory Guide 1.9 refer to Section 3.13.

7.1.2.6.3 Conformance to Regulatory Guide 1.11 (3/10/71)

Refer to Section 3.13.

7.1.2.6.4 Conformance to Regulatory Guide 1.22 (2/17/72)

This discussion is presented for systems in the analysis portion of Sections 7.2, 7.3, 7.4, and 7.6.

7.1.2.6.5 Conformance to Regulatory Guide 1.29 (6/7/72)

a) NSSS - The instrumentation and control equipment required to meet Seismic Class I by Regulatory Guide 1.29 is identified in Table 3.2-1.

b) Non-NSSS - Refer to Section 3.13.

7.1.2.6.5.1 Conformance to Regulatory Guide 1.29 (9/78)

The conformance of the Diesel Generator 'E' equipment with Regulatory Guide 1.29 is discussed in Section 3.13.

7.1.2.6.6 Conformance to Regulatory Guide 1.30 (8/11/72)

a) NSSS - The quality assurance requirements of IEEE 336-1971 are applicable during the plant design and construction phases (see Subsection 7.1.2.5.5) and will also be implemented as an operational QA program during plant operation in response to Regulatory Guide 1.30.

b) Non-NSSS - Refer to Section 3.13.

7.1.2.6.7 Conformance to Regulatory Guide 1.32 (8/72)

a) NSSS - The ECCS is designed to the requirements of Regulatory Guide 1.32 and IEEE Standard 308-1971. Subsection 7.3.2 provides discussion of compliance.
b) Non-NSSS – Refer to Sections 3.13 and Section 8.1.6.1.

7.1.2.6.7.1 Conformance to Regulatory Guide 1.32 (2/77)

The conformance of the Diesel Generator 'E' equipment with Regulatory Guide 1.32 is discussed in Section 3.13.

7.1.2.6.8 Conformance to Regulatory Guide 1.40 (3/16/73)

a) NSSS - There are no continuous duty motors installed inside the containment that are part of the instrumentation and control systems and no discussion is provided.

b) Non-NSSS – Refer to Subsection 3.11.2 and Section 3.13.

7.1.2.6.9 Conformance to Regulatory Guide 1.45 (5/73)

Refer to Subsections 3.13 and 5.2.5.1 for detailed description of the Susquehanna SES design conformance to this guide.

7.1.2.6.10 Conformance to Regulatory Guide 1.47 (5/73)

a) NSSS - The system of bypass indication is designed to satisfy the requirement of IEEE 279-1971 paragraph 4.13 and Regulatory Guide 1.47 and is discussed for each safety-related system under Sections 7.2, 7.3, 7.4, and 7.6. The design of the bypass indication system allows testing during normal operation and is used to supplement administrative procedures by providing indications of safety systems status.

The bypass indication system is designed and installed in a manner which precludes the possibility of adverse affects on the plant safety system. The bypass indication system is electrically isolated from the protection circuits such that the failure or bypass of a protective function is not a credible consequence of failures in the bypass indication system and the bypass indication system cannot reduce the independence between redundant safety systems.

b) Non-NSSS - Refer to individual systems in Section 7.3 and discussion in Section 7.5.

7.1.2.6.11 Conformance to Regulatory Guide 1.53 (6/73)

a) NSSS - The safety-related system designs conform to the single failure criterion. The analysis portions of Sections 7.2, 7.3, 7.4 and 7.6 provide further discussion.

b) Non-NSSS Refer to Section 3.13

7.1.2.6.12 Conformance to Regulatory Guide 1.62 (10/73)

a) NSSS - Manual initiation of the protective action is provided at the system level in the Reactor Protection System, (primary) Containment and Reactor Vessel Isolation Control System and Emergency Core Cooling Systems. The analysis portions of Sections 7.2 and 7.3 provide further discussion.

b) Non-NSSS - Refer to Section 3.13.

7.1.2.6.13 Conformance to Regulatory Guide 1.63 (10/73)

a) NSSS - Regulatory Guide 1.63 applies to electrical penetration assemblies which are not part of NSSS scope.

b) Non-NSSS - Refer to Section 3.13.

7.1.2.6.14 Conformance to Regulatory Guide 1.68 (11/73)

Refer to Section 3.13.

7.1.2.6.15 Conformance to Regulatory Guide 1.70 (Rev. 2)

The format and content of Chapter 7 conform to the requirements of Regulatory Guide 1.70.

7.1.2.6.16 Conformance to Regulatory Guide 1.73 (1/74)

Refer to Section 3.13.

7.1.2.6.17 Conformance to Regulatory Guide 1.75 (1/75)

a) NSSS Regulatory Guide 1.75 is not applicable to Susquehanna SES; however, degree of compliance to separation criteria of IEEE 384 is discussed in Subsection 7.1.2.5.8.

b) Non-NSSS - Refer to Section 3.13 and Subsection 8.1.6.1.

7.1.2.6.17.1 Conformance to Regulatory Guide 1.75 (9/78)

The conformance of the Diesel Generator 'E' equipment with Regulatory Guide 1.75 is discussed in Section 8.1.6.1.

7.1.2.6.18 Conformance to Regulatory Guide 1.80 (6/74)

a) NSSS - Regulatory Guide 1.80 applies to the testing of instrument air systems which are not part of the NSSS scope.

b) Non-NSSS - Refer to Section 3.13.

7.1.2.6.19 Conformance to Regulatory Guide 1.89 (11/74)

a) NSSS - See the Susquehanna SES Environmental Equipment Qualification Program.

b) Non-NSSS - Refer to Section 3.13.

7.1.2.6.20 Conformance to Regulatory Guide 1.96 (6/76)-Rev. 1

The Main Steam Isolation Valve Leakage Control System has been deleted. The function is now performed by the Isolated Condenser Treatment Method (Section 6.7), approved by the NRC as an alternative to Regulatory Guide 1.96.

7.1.2.6.21 Conformance to Regulatory Guide 1.97

Post-accident instrumentation is in conformance with Regulatory Guide 1.97, Revision 2, with clarifications as described in PLA-965 and PLA-2222. Equipment and components used for post-accident monitoring are described in the applicable FSAR sections.

The redundant valve position indication in the control room as discussed in PLA-2222, Conformance to Regulatory Guide 1.97 Revision 2, is not applicable to the following solenoid operated Primary Containment Isolation Valves (PCIV) belonging to the Post-accident H_20_2 Analyzers subsystem:

Unit-1 PCIVs: SV15742A(B), SV15774A(B), SV15752A(B), SV15782A(B), SV15734A(B), SV15740A(B), SV15776A(B), SV15750A(B), SV15780A(B), SV15736A(B),
Unit-2 PCIVs: SV25742A(B), SV25774A(B), SV25752A(B), SV25782A(B), SV25734A(B), SV25740A(B), SV25776A(B), SV25750A(B), SV25780A(B), SV25736A(B).

The inboard and outboard PCIVs and their associated position indication circuitry are powered from the same division of class-1E power as their post-accident H_20_2 analyzers. The basis for this design is to prevent a single failure of one power source from eliminating all post accident monitoring capability. The post-accident H_20_2 analyzer piping is a closed system. The closed system provides a redundant isolation barrier for the primary containment. It is a passive isolation barrier that does not require any position indication. The design was determined acceptable in the NRC Safety Evaluation related to the Technical Specification amendment 170 and 195. (PPL document reference NRC 2001-0113).

All five valves of a group are manually operated with one control switch located in the control room. They are designed to open or close in a group and can not be opened without their power sources. Each group is provided with one set of valve position indicating lights in the control room. An amber light in the control room indicates that all valves in a given group are closed. A red light in the control room indicates that all valves in that group are open. Dual indication (red and amber both illuminated) or lack of indication (neither light illuminated) indicates a problem. Individual valve position indicating lights are provided on local control panels. They provide additional means to determine the positions of these PCIVs.

7.1.2.7 Technical Design Bases

The technical design bases for RPS are in Subsection 7.2.1, for engineered safety features in Subsection 7.3.1, for systems required for safe shutdown in Subsection 7.4.1, and for other systems required for safety in Subsection 7.6.1a.

7.1.2.8 Safety System Settings

The safety system setpoints are listed in the Technical Specifications. The settings are determined based on operating experience and conservative analyses. The settings are high enough to preclude inadvertent initiation of the safety action, but low enough to assure that significant margin is maintained between the actual setting and the limiting safety system settings. Instrument drift, setability and repeatability are considered in the setpoint determination (see Subsections 7.1.2a.4 and 7.1.2b.4). The margin between the limiting safety system settings and the actual safety limits include consideration of the maximum credible transient in the process being measured.

The periodic test frequency for each variable is determined from experimental data on setpoint drift and from quantitative reliability requirements for each system and its components.

TABLE 7.1-1

RESPONSIBILITY

	NSSS	Non-NSSS
Reactor Trip System		
Reactor Protection System (RPS)	X	
Alternate Rod Injection System (ARI)		X
Engineered Safety Feature Systems		
Emergency Core Cooling Systems (ECCS)	X	
High Pressure Coolant Injection (HPCI)		
Automatic Depressurization System (ADS)		
Core Spray System (CS)		
Low Pressure Coolant Injection (LPCI) Mode of RHR		
Primary Containment and Reactor Vessel		
Isolation Control Systems (PCBVICS)	X	X
RHR, Containment Spray Cooling Mode	X	
RHR, Suppression Pool Cooling Mode	X	
PCRVICS Leak Detection System	X	
PCRVICS Radiation Monitoring Systems	X	
Primary Containment Isolation Controls		X
Combustible Gas Control System		X
Primary Containment Vacuum Relief		X
Standby Gas Treatment System (SGTS)		X
Reactor Building Recirculation System		X
Reactor Building Isolation and HVAC Support		X
Habitability Systems, Control Room Isolation and Supporting HVAC Systems		
Control Room HVAC		X
Control Structure HVAC		X
Computer Room Cooling System		X
Emergency Outside Air Supply		X
Battery Room Exhaust System		X
Auxiliary Support Systems		
Emergency Service Water (ESW)		X
RHR Service Water (RHRSW)		X
Containment Instrument Gas		X
Standby Power Systems		X
Heating, Ventilating, and Air Conditioning for ESF Areas		X

TABLE 7.1-1

RESPONSIBILITY

	NSSS	Non-NSSS
Instrumentation and Controls for Systems Required for Safe Shutdown		
Reactor Core Isolation Cooling System (RCIC)	X	
Standby Liquid Control System (SLC)	X	
RHR, Reactor Shutdown Cooling Mode	X	
Reactor Shutdown Outside the Control Room		X
Safety Related Display Instrumentation	X	X
Other Systems Required for Safety		
High Pressure/Low Pressure Interlocks	X	
NSSS Leak Detection System	X	
Neutron Monitoring System		
Intermediate Range Monitor (IRM)	X	
Average Power Range Monitor (APRM)	X	
Local Power Range Monitor (LPRM)	X	
Oscillating Power Range Monitor (OPRM)	X	
Recirculation Pump Trip System	X	
Drywell Entry Purge (Air Purge)		X
Containment Atmosphere Monitor		X
NSSS to non-NSSS (Standby Power Start)	X	X
Process Effluent Radiological Monitoring	X	X
Control Systems Not Required for Safety		
Refueling Interlocks	X	
Reactor Vessel Instrumentation	X	
Reactor Manual Control System	X	
Rod Block Trip Subsystem	X	
Rod Worth Minimizer Subsystem	X	
Recirculation Flow Control System	X	
Feedwater Control System	X	X
Pressure Regulator & Turbine-Generator System		X
Neutron Monitoring System	X	
Traversing Incore Probe (TIP)		
Rod Block Monitor (RBM)	X	
Source Range Monitor (SRM)		
Reactor Water Cleanup System (RWCU)	X	X
Radwaste System		X
Gaseous Radwaste System		
Liquid Radwaste System		
Solid Radwaste System		
Area Radiation Monitoring System	X	X
Process Computer	X	

HISTORICAL INFORMATION

TABLE 7.1-2

SIMILARITY TO LICENSED REACTORS

	Instrumentation and Control (System)	Plants Applying for or Having Construction Permit or Operating License	Similarity of Design
(1)	Reactor Protection System	Shoreham	See Note 1
(2)	Primary Containment and Reactor Vessel Isolation Control System	Shoreham	Identical See Note 9
(3)	Emergency Core Cooling System	Peach Bottom 2 & 3	Similar
(4)	Neutron Monitoring System	Shoreham	Identical except more incore sensors
(5)	Refueling Interlocks	LaSalle	Identical
(6)	Reactor Manual Control System	Shoreham	Identical
(7)	Reactor Vessel-Instrumentation	Fermi 2	Similar See Note 3
(8)	Recirculation Flow Control System	Shoreham	Identical
(9)	Feedwater Control System	Peach Bottom 2 & 3	See Note 6
(10)	Process Radiation Monitoring Equipment	Hatch 1	See Note 2
(11)	Area Radiation Monitoring Equipment	Hatch 1	Identical
(12)	Process Computer	None	New
(13)	Reactor Core Isolation Cooling System	Shoreham	See Note 8
(14)	Standby Liquid Control System	Shoreham	Identical
(15)	Reactor Water Cleanup System	Shoreham	See Note 4
(16)	Leak Detection Systems (NSSS)	Hatch 2	See Note 5
(17)	RHR, Reactor Shutdown Cooling Mode	Shoreham	Identical
(18)	Main Steamline Isolation Valve Leakage Control	Shoreham	Identical
(19)	NSSS Safety-Related Display	Brunswick	Identical
(20)	RHR, Containment Spray Cooling Mode	Hatch 2	Identical

HISTORICAL INFORMATION

TABLE 7.1-2

SIMILARITY TO LICENSED REACTORS

Instrumentation and Control (System)		Plants Applying for or Having Construction Permit or Operating License	Similarity of Design
(21)	Recirculation Pump Trip (RPT) System	LaSalle	See Note 7
(22)	RHR, Suppression Pool Cooling Mode	Hatch 2	Identical

Note 1:

This plant has more control rods and a larger CRD scram discharge volume than Shoreham. It has sufficient discharge volume capacity to contain the required number of scrams and sufficient scram initiation equipment (control rod solenoids, actuator logic and control cables) to effect a scram.

Note 2:

The main steamline radiation monitoring subsystem is identical to Hatch 1.

Note 3: Reactor Vessel Instrumentation

Susquehanna has an upset level water range. Fermi does not.

Note 4:

Identical except for additional leak detection measurement on the RWCU inlet line. The signal is used to close the RWCU isolation valves.

Note 5:

Some variables are recorded on Susquehanna whereas they are indicated on Hatch 2.

TABLE 7.1-2

SIMILARITY TO LICENSED REACTORS

Instrumentation and Control (System)	Plants Applying for or Having Construction Permit or Operating License	Similarity of Design

Note 6:

Susquehanna SES uses GE MAC 7000 instrument loop whereas Peach Bottom 2 and 3 utilize GE MAC 5000.

Note 7:

The Susquehanna design requires that circuit breakers be located in an area where they are not exposed to environmental conditions that would cause them to fail to meet the interrupting time requirement.

Note 8:

Identical, except on Susquehanna

a) the outboard MSIV is normally open and has no warmup valve,
b) the inboard MSIV warmup valve is normally closed,
c) these are two turbine exhaust vacuum breaker valves.

Note 9:

The term "identical" means the referenced systems' instruments, controls and logics are functionally the same, although the sizes, flows, and locations may be different.

TABLE 7.1-3

CODES AND STANDARDS APPLICABILITY MATRIX [3]

	10 CFR 50.34	10 CFR 50.36	10 CFR 50.55a	10 CFR 50 App. A GDC 1	10 CFR 50 App. A GDC 2	10 CFR 50 App. A GDC 3	10 CFR 50 App. A GDC 4	10 CFR 50 App. A GDC 5	10 CFR 50 App. A GDC 10	10 CFR 50 App. A GDC 12	10 CFR 50 App. A GDC 13	10 CFR 50 App. A GDC 15
RPS	X	X	X	X	X	X	X	X	X	X	X	X
PCRVICS	X	X	X	X	X	X	X		X		X	
ECCS	X	X	X	X	X	X	X		X		X	
NMS	X	X	X	X	X	X	X		X	X	X	
Reactor Manual Control System	X	X		X	X	X	X				X	
Reactor Vessel Instrumentation	X		X								X	
Recirculation Flow Control	X		X								X	X
Feedwater Control System	X		X								X	X

Table Rev. 56

TABLE 7.1-3

CODES AND STANDARDS APPLICABILITY MATRIX (3)

	10 CFR 50.62	10 CFR 50.34	10 CFR 50.36	10 CFR 50.55a	10 CFR 50 App. A GDC 1	10 CFR 50 App. A GDC 2	10 CFR 50 App. A GDC 3	10 CFR 50 App. A GDC 4	10 CFR 50 App. A GDC 5	10 CFR 50 App. A GDC 10	10 CFR 50 App. A GDC 12	10 CFR 50 App. A GDC 13	10 CFR 50 App. A GDC 15
Process Computer		X		X									
RCIC		X	X	X	X	X	X	X		X		X	
Standby Liquid Control System	X	X	X	X	X	X	X	X				X	
Reactor Water Cleanup System		X		X								X	X
NSSS Leak Detection Systems		X	X	X	X	X	X	X		X		X	
Reactor Shutdown Cooling Mode (RHR)		X	X	X	X	X	X	X		X		X	
Alternate Rod Injection System (ARI)	X	X			X	X	X	X				X	

Table Rev. 56

TABLE 7.1-3

CODES AND STANDARDS APPLICABILITY MATRIX (3)

	10 CFR 50.34	10 CFR 50.36	10 CFR 50.55a	10 CFR 50 App. A GDC 1	10 CFR 50 App. A GDC 2	10 CFR 50 App. A GDC 3	10 CFR 50 App. A GDC 4	10 CFR 50 App. A GDC 5	10 CFR 50 App. A GDC 10	10 CFR 50 App. A GDC 12	10 CFR 50 App. A GDC 13	10 CFR 50 App. A GDC 15
Safety Related Display Instrumentation	X	X	X	X	X	X	X			X	X	X
Drywell Vacuum Relief System	X		X									
RHRS Containment Spray Cooling Mode	X	X	X	X	X	X	X				X	
Recirculation Pump Trip	X	X	X	X	X	X	X				X	
RHRS Suppression Pool Cooling Mode	X	X	X	X	X	X	X				X	

Table Rev. 56

TABLE 7.1-3

CODES AND STANDARDS APPLICABILITY MATRIX (3)

	10 CFR 50 App. A GDC 19	10 CFR 50 App. A GDC 20.	10 CFR 50 App. A GDC 21	10 CFR 50 App. A GDC 22	10 CFR 50 App. A GDC 23	10 CFR 50 App. A GDC 24	10 CFR 50 App. A GDC 25	10 CFR 50 App. A GDC 26	10 CFR 50 App. A GDC 27	10 CFR 50 App. A GDC 28	10 CFR 50 App. A GDC 29	10 CFR 50 App. A GDC 33	10 CFR 50 App. A GDC 34
RPS	X	X	X	X	X	X	X				X		
PCRVICS	X	X	X	X	X	X					X		
ECCS	X	X	X	X	X	X					X		X
NMS	X	X	X	X	X	X					X		
Reactor Manual Control Systems	X	X				X		X	X	X	X		
Reactor Vessel Instrumentation	X					X					X		
Recirculation Flow Control	X					X		X			X		
Feedwater Control System	X					X					X		

Table Rev. 56

TABLE 7.1-3

CODES AND STANDARDS APPLICABILITY MATRIX (3)

	10 CFR 50 App. A GDC 19	10 CFR 50 App. A GDC 20.	10 CFR 50 App. A GDC 21	10 CFR 50 App. A GDC 22	10 CFR 50 App. A GDC 23	10 CFR 50 App. A GDC 24	10 CFR 50 App. A GDC 25	10 CFR 50 App. A GDC 26	10 CFR 50 App. A GDC 27	10 CFR 50 App. A GDC 28	10 CFR 50 App. A GDC 29	10 CFR 50 App. A GDC 30	10 CFR 50 App. A GDC 33	10 CFR 50 App. A GDC 34
Process Computer	X										X			
RCIC	X	X	X	X	X	X					X			X
Standby Liquid Control System	X										X			
Reactor Water Cleanup System	X													
NSSS Leak Detection Systems	X	X	X	X	X	X					X	X	X	X
Reactor Shutdown Cooling Mode (RHR)	X	X	X	X	X	X					X			X
Spent Fuel Pool Cooling and Cleanup System														
Alternate Rod Injection System (ARI)	X	X	X	X		X					X			

Table Rev. 56

TABLE 7.1-3

CODES AND STANDARDS APPLICABILITY MATRIX (3)

	10 CFR 50 App. A GDC 19	10 CFR 50 App. A GDC 20	10 CFR 50 App. A GDC 21	10 CFR 50 App. A GDC 22	10 CFR 50 App. A GDC 23	10 CFR 50 App. A GDC 24	10 CFR 50 App. A GDC 25	10 CFR 50 App. A GDC 26	10 CFR 50 App. A GDC 27	10 CFR 50 App. A GDC 28	10 CFR 50 App. A GDC 29	10 CFR 50 App. A GDC 33	10 CFR 50 App. A GDC 34
Safety Related Display Instrumentation	X					X				X	X	X	X
RHRS Containment Spray Cooling Mode	X		X	X	X	X					X		X
Recirculation Pump Trip		X	X	X	X	X					X		
RHRS Suppression Trip Cooling System	X		X			X					X		

Table Rev. 56

TABLE 7.1-3

CODES AND STANDARDS APPLICABILITY MATRIX (3)

	10 CFR 50 App. A GDC 35	10 CFR 50 App. A GDC 37	10 CFR 50 App. A GDC 38	10 CFR 50 App. A GDC 40	10 CFR 50 App. A GDC 41	10 CFR 50 App. A GDC 43	10 CFR 50 App. A GDC 44	10 CFR 50 App. A GDC 46	10 CFR 50 App. A GDC 50	10 CFR 50 App. A GDC 54	10 CFR 50 App. A GDC 55	10 CFR 50 App. A GDC 56	10 CFR 50 App. A GDC 57
RPS													
PCRVICS	X									X	X	X	
ECCS	X	X											
NMS													
Reactor Manual Control System													
Reactor Vessel Instrumentation													
Recirculation Flow Control													
Feedwater Control System													
Process Computer													
RCIC													
Standby Liquid Control System													

Table Rev. 56

TABLE 7.1-3

CODES AND STANDARDS APPLICABILITY MATRIX (3)

	10 CFR 50 App. A GDC 35	10 CFR 50 App. A GDC 37	10 CFR 50 App. A GDC 38	10 CFR 50 App. A GDC 40	10 CFR 50 App. A GDC 41	10 CFR 50 App. A GDC 43	10 CFR 50 App. A GDC 44	10 CFR 50 App. A GDC 46	10 CFR 50 App. A GDC 50	10 CFR 50 App. A GDC 54	10 CFR 50 App. A GDC 55	10 CFR 50 App. A GDC 56	10 CFR 50 App. A GDC 57
Reactor Water Cleanup System											X		
Leak Detection Systems	X									X	X	X	
Reactor Shutdown Cooling Mode (RHR)													
Spent Fuel Cooling and Cleanup System													
ARI System													
Safety Related Display Instrumentation			X		X					X	X	X	X
RHRS Containment Spray Cooling Mode			X	X					X				
Recirculation Pump Trip													
RHRS Suppression Pool Cooling Mode			X	X					X				

TABLE 7.1-3

CODES AND STANDARDS APPLICABILITY MATRIX (3)

	IWW 279-1971	IWW 308-1974	IEEE 323-1971	IWW 336-1971	IEEE 338-1971	IEEE 344-1971	IEEE 379-1972	IEEE 384-1974
RPS	X			X	X	X	X	X
PCRVICS	X	X	X	X	X	X	X	
ECCS	X	X	X		X	X	X	
NMS	X		X		X	X	X	
Reactor Manual Control System	(1)							
Reactor Vessel Instrumentation	X							
Recirculation Flow Control								
Feedwater Control System								
Process Computer	(2)							
RCIC	X	X	X		X	X		
Standby Liquid Control System	X		X		X	X		
Reactor Water Cleanup System								

Table Rev. 56

TABLE 7.1-3

CODES AND STANDARDS APPLICABILITY MATRIX [3]

	IEEE 279-1971	IEEE 308-1974	IEEE 323-1971	IEEE 336-1971	IEEE 338-1971	IEEE 344-1971	IEEE 379-1972	IEEE 384-1974
NSSS Leak Detection System	X	X	X	X	X	X	X	
Reactor Shutdown Cooling Mode (RHR)	X	X	X		X	X	X	
Spent Fuel Pool Cooling and Cleanup System								X
ARI System				X	X	X		X
Safety Related Display Instrumentation	X	X	X	X	X			
RHRS Containment Spray Cooling Mode	X	X	X	X	X	X	X	
Recirculation Pump Trip	X	4	X		X	X	X	
RHRS Suppression Pool Cooling Mode	X	X	X		X	X	X	

TABLE 7.1-3

CODES AND STANDARDS APPLICABILITY MATRIX (3)

	RG 1.6-03/10/71	RG 1.11-03/10/71	RG 1.22-02/17/72	RG 1.29-02/76	RG 1.30-08/72	RG 1.32-08/72	RG 1.47-05/73	RG 1.53-06/73	RG 1.62-10/73	RG 1.56-06/73
RPS			X	X	X		X	X	X	
PCRVICS			X	X	X		X	X	X	
ECCS	X		X	X	X		X	X	X	
NMS			X				X	X		
Reactor Manual Control System										
Reactor Vessel Instrumentation										
Recirculation Flow Control										
Feedwater Control System										
Process Computer										
RCIC	X		X	X	X		X	X	X	
Standby Liquid Control System			X	X	X		X		X	

Table Rev. 56

TABLE 7.1-3

CODES AND STANDARDS APPLICABILITY MATRIX (3)

	RG 1.6-03/10/71	RG 1.11-03/10/71	RG 1.22-02/17/72	RG 1.29-02/74	RG 1.30-08/72	RG 1.32-08/72	RG 1.47-05/73	RG 1.53-06/73	RG 1.62-10/73	RG 1.63-06/73
Reactor Water Cleanup System		X								X
NSSS Leak Detection Systems	X		X				X	X		
Reactor Shutdown Cooling Mode (RHR)	X		X							
Spent Fuel Cooling and Cleanup System										
ARI System			X		X			X	X	
Safety Related Display Instrumentation			X			X	X			
RHRS Containment Spray Cooling Mode	X		X							
Recirculation Pump Trip			X	X		4	X	X		
Containment Cooling System			X	X		X				
RHRS Suppression Pool Cooling Mode			X	X	X		X	X	X	

Table Rev. 56

TABLE 7.1-3

CODES AND STANDARDS APPLICABILITY MATRIX (3)

	RG 1.63-10/73	RG 1.68-11/73	RG 1.70-09/75	RG 1.75-01/75	RG 1.89-11/74	RG 1.96-05/75
RPS		X	X			
PCRVICS			X			
ECCS			X			
NMS			X			
Reactor Manual Control System			X			
Reactor Vessel Instrumentation			X			
Recirculation Flow Control			X			
Feedwater Control System			X			
Process Computer			X			
RCIC			X			
Standby Liquid Control System			X			
Reactor Water Cleanup System			X			

Table Rev. 56

TABLE 7.1-3

CODES AND STANDARDS APPLICABILITY MATRIX (3)

	RG 1.63-10/73	RG 1.68-11/73	RG 1.70-09/75	RG 1.75-01/75	RG 1.89-11/74	RG 1.96-05/75
NSSS Leak Detection Systems			X			
Reactor Shutdown Cooling Mode (RHR)			X			
Spent Fuel Cooling and Cleanup System			X			
ARI System			X	X		
Safety Related Display Instrumentation		X	X			
RHRS Containment Spray Cooling Mode			X			
Recirculation Pump Trip			X			
RHRS Suppression Pool Cooling Mode			X			

Table Rev. 56

TABLE 7.1-3

CODES AND STANDARDS APPLICABILITY MATRIX (3)

	BTPEICSB-3	BTPEICSB-10	BTPEICSB-21
RPS		X	X
PCRVICS		X	X
ECCS	X	X	X
NMS		X	
Reactor Manual Control System			
Reactor Vessel Instrumentation			
Recirculation Flow Control			
Feedwater Control Svstem			
Process Computer			
RCIC		X	X
Standby Liquid Control System		X	

Table Rev. 56

TABLE 7.1-3

CODES AND STANDARDS APPLICABILITY MATRIX [3]

	BTP ICSB-3	BTP ICSB-10	BTP ICSB-21
Reactor Water Cleanup System			
NSSS Leak Detection Systems		X	X
Reactor Shutdown Cooling System (RHR)	X	X	X
Spent Fuel Pool Cooling and Cleanup System			
ARI System		X	
Safety Related Display Instrumentation			X
RHRS Containment Spray Cooling Mode		X	X
Recirculation Pump Trip		X	X
RHRS Suppression Pool Cooling Mode		X	

Table Rev. 56

TABLE 7.1-3

CODES AND STANDARDS APPLICABILITY MATRIX (3)

	BTPEICSB-22	BTPEICSB-23	BTPEICSB-26
RPS	X		X
PCRVICS	X		
ECCS	X		
NMS	X		
Reactor Manual Control System			
Reactor Vessel Instrumentation			
Recirculation Flow Control			
Feedwater Control Svstem			
Process Computer			
RCIC	X		
Standby Liquid Control System	X		
Reactor Water Cleanup System			

Table Rev. 56

TABLE 7.1-3

CODES AND STANDARDS APPLICABILITY MATRIX (3)

	BTPEICSB-22	BTPEICSB-23	BTPEICSB-26
NSSS Leak Detection Systems	X		
Reactor Shutdown Cooling System (RHR)	X		
Spent Fuel Pool Cooling and Cleanup System			
ARI System	X		
Safety Related Display Instrumentation		X	
RHRS Containment Spray Cooling Mode	X		
Recirculation Pump Trip	X		
RHRS Suppression Pool Cooling Mode	X		

TABLE 7.1-3

CODES AND STANDARDS APPLICABILITY MATRIX (3)

NOTES:

1. Interlock functions for Rod Withdrawal Block (RBM) are required to meet specific NRC requirements, rather than IEEE-279.

2. Process Computer contains Rod Worth Minimizer Program, which is a portion of the Rod Withdrawal Block Interlock function.

3. This table indicates applicability of codes and standards to the systems. The degree of conformance is stated in the conformance section for each system.

4. Compliance to IEEE 308-1974 and Regulatory Guide 1.32-1972 does not apply to the logic system, which is fail safe. Class 1E DC Control Power is provided to energize the breaker trip coils.

TABLE 7.1-4

REACTOR PROTECTION SYSTEM CODES AND STANDARDS

	IEEE-279-1971	IEEE-336-1971	IEEE-338-1971	IEEE-344-1971 (1)	IEEE-379-1972	IEEE-384-1974	R.G. 1.89 (1)	R. G. 1.22	R. G. 1.29	R. G. 1.47	R. G. 1.53	R. G. 1.62	R. G. 1.75
SCRAM DISCHARGE VOLUME	X		X	X	X	X							
MSL ISOLATION VALVE CLOSURE	X		X	X	X	X				X	X		
TURBINE STOP VALVE CLOSURE	X		X	X	X	X					X		
TURBINE CONTROL VALVE FAST CLOSURE	X		X	X	X	X					X		
REACTOR LOW WATER LEVEL	X		X	X	X	X							
NEUTRON MONITORING SYSTEM IRM	X		X	X	X	X							
NEUTRON MONITORING SYSTEM APRM	X		X	X	X	X							
DRYWELL HIGH PRESSURE	X		X	X	X	X							
REACTOR HIGH PRESSURE	X		X	X	X	X							
MANUAL SWITCH INPUTS	X		X	X	X	X							
BYPASS INPUTS	X		X	X	X	X							
TRIP LOGIC TRIP ACTUATOR OUTPUTS	X		X	X	X	X		X					

(1) See Table 7.1-3 notes for further discussion

TABLE 7.1-4

REACTOR PROTECTION SYSTEM CODES AND STANDARDS

	GDC 13	GDC 19	GDC 20	GDC 21	GDC 22	GDC 23	GDC 24	GDC 25	GDC 29	R. G. 1.30	R. G. 1.68
SCRAM DISCHARGE VOLUME	X		X	X	X	X	X	X	X	X	X
MSL ISOLATION VALVE CLOSURE	X		X	X	X	X	X		X	X	X
TURBINE STOP VALVE CLOSURE	X		X	X	X	X	X		X	X	X
TURBINE CONTROL VALVE FAST CLOSURE	X		X	X	X	X	X		X	X	X
REACTOR LOW WATER LEVEL	X		X	X	X	X	X		X	X	X
NEUTRON MONITORING SYSTEM IRM	X		X	X	X	X	X	X	X	X	X
NEUTRON MONITORING SYSTEM APRM	X		X	X	X	X	X	X	X	X	X
DRYWELL HIGH PRESSURE	X		X	X	X	X	X		X	X	X
REACTOR HIGH PRESSURE	X		X	X	X	X	X		X	X	X
MANUAL SWITCH INPUTS		X		X	X	X	X	X	X		
BYPASS INPUTS			X	X	X	X	X	X	X		
TRIP LOGIC TRIP ACTUATOR OUTPUTS			X	X	X	X	X	X	X		

TABLE 7.1-5

PRIMARY CONTAINMENT AND REACTOR VESSEL ISOLATION CONTROL SYSTEM CODES AND STANDARDS

	10 CFR 50.34	10 CFR 50.36	10 CFR 50.55A	GDC 1	GDC 2	GDC 3	GDC 4	GDC 5	GDC 10	GDC 13	GDC 19	GDC 20	GDC 21	GDC 22
REACTOR LOW WATER LEVEL	X	X	X	X	X	X	X	X	X	X		X	X	X
MSL HIGH RADIATION	X	X	X	X	X	X	X	X		X		X	X	X
MSL HIGH FLOW	X	X	X	X	X	X	X	X		X		X	X	X
MSL TUNNEL HIGH TEMPERATURE	X	X	X	X	X	X	X	X		X		X	X	X
MSL TUNNEL HIGH DIFF. TEMPERATURE	X	X	X	X	X	X	X	X		X		X	X	X
REACTOR LOW PRESSURE	X	X	X	X	X	X	X	X	X	X		X	X	X
DRYWELL HIGH PRESSURE	X	X	X	X	X	X	X	X		X		X	X	X
CONTAINMENT EXHAUST VENT PLENUM MON.	X	X	X	X	X	X	X	X		X		X	X	X
REACTOR WATER CLEANUP LOOP HIGH DIFF. FLOW	X	X	X	X	X	X	X	X		X		X	X	X
REACTOR WATER CLEANUP LOOP HIGH SPACE TEMPERATURE	X	X	X	X	X	X	X	X		X		X	X	X

(1) Refer to notes on Table 7.1-3

TABLE 7.1-5

PRIMARY CONTAINMENT AND REACTOR VESSEL ISOLATION CONTROL SYSTEM CODES AND STANDARDS

	GDC 23	GDC 24	GDC 29	GDC 35	GDC 54	GDC 55	GDC 56	IEEE-279-1971	IEEE 323-1971	IEEE-336-1971	IEEE-338-1971	IEEE-344-1971
REACTOR LOW WATER LEVEL	X	X	X			X	X	X	X	X	X	X
MSL HIGH RADIATION	X	X	X			X	X	X	X	X	X	X
MSL HIGH FLOW	X	X	X		X	X	X	X	X	X	X	X
MSL TUNNEL HIGH TEMPERATURE	X	X	X		X	X	X	X	X	X	X	X
MSL TUNNEL HIGH DIFF. TEMPERATURE	X	X	X		X	X	X	X	X	X	X	X
REACTOR LOW PRESSURE	X	X	X			X	X	X	X	X	X	X
DRYWELL HIGH PRESSURE	X	X	X	X		X	X	X	X	X	X	X
CONTAINMENT EXHAUST VENT PLENUM MON.	X	X	X					X	X	X	X	X
REACTOR WATER CLEANUP LOOP HIGH DIFF. FLOW	X	X	X		X	X	X	X	X	X	X	X
REACTOR WATER CLEANUP LOOP HIGH SPACE TEMPERATURE	X	X	X		X	X	X	X	X	X	X	X

TABLE 7.1-5

PRIMARY CONTAINMENT AND REACTOR VESSEL ISOLATION CONTROL SYSTEM CODES AND STANDARDS

	IEEE-379-1972	R. G. 1.22	R. G. 1.29	R. G. 1.30	R. G. 1.47	R. G. 1.53	R. G. 1.62	R. G. 1.70	BTPEICSB10	BTPEICSB21
REACTOR LOW WATER LEVEL	X	X	X	X		X		X	X	X
MSL HIGH RADIATION	X	X	X	X		X		X	X	X
MSL HIGH FLOW	X	X	X	X		X		X	X	X
MSL TUNNEL HIGH TEMPERATURE	X	X	X	X		X		X	X	X
MSL TUNNEL HIGH DIFF. TEMPERATURE	X	X	X	X		X		X	X	X
REACTOR LOW PRESSURE	X	X	X	X		X		X	X	X
DRYWELL HIGH PRESSURE	X	X	X	X		X		X	X	X
CONTAINMENT EXHAUST VENT PLENUM MON.	X	X	X	X		X		X	X	X
REACTOR WATER CLEANUP LOOP HIGH DIFF. FLOW	X	X	X	X		X		X	X	X
REACTOR WATER CLEANUP LOOP HIGH SPACE TEMPERATURE	X	X	X	X		X		X	X	X

TABLE 7.1-5

PRIMARY CONTAINMENT AND REACTOR VESSEL ISOLATION CONTROL SYSTEM CODES AND STANDARDS

	10 CFR 50.34	10 CFR 50.36	10 CFR 50.55a	GDC 1	GDC 2	GDC 3	GDC 4	GDC 5	GDC 10	GDC 13	GDC 19	GDC 20	GDC 21	GDC 22
REACTOR WATER CLEANUP LOOP HIGH SPACE DIFF. TEMPERATURE	X	X	X	X	X	X	X	X		X		X	X	X
REACTOR WATER CLEANUP FILTER DEMIN. INLET HIGH TEMPERATURE														
RHR HIGH FLOW	X	X	X	X	X	X	X	X		X		X	X	X
CONDENSER LOW VACUUM	X	X	X	X	X	X	X	X		X		X	X	X
MANUAL SWITCH INPUTS	X	X	X	X	X	X	X	X			X		X	X
BYPASS INPUTS	X	X	X	X	X	X	X	X	X	X		X	X	X
TRIP LOGIC TRIP ACTUATOR OUTPUTS	X	X	X	X	X	X	X	X	X	X		X	X	X

TABLE 7.1-5

PRIMARY CONTAINMENT AND REACTOR VESSEL ISOLATION CONTROL SYSTEM CODES AND STANDARDS

	BTPISB22
REACTOR LOW WATER LEVEL	X
MSL HIGH RADIATION	X
MSL HIGH FLOW	X
MSL TUNNEL HIGH TEMPERATURE	X
MSL TUNNEL HIGH DIFF. TEMPERATURE	X
REACTOR LOW PRESSURE	X
DRYWELL HIGH PRESSURE	X
CONTAINMENT EXHAUST VENT PLENUM MON.	X
REACTOR WATER CLEANUP LOOP HIGH DIFF. FLOW	X
REACTOR WATER CLEANUP LOOP HIGH SPACE TEMPERATURE	X

TABLE 7.1-5

PRIMARY CONTAINMENT AND REACTOR VESSEL ISOLATION CONTROL SYSTEM CODES AND STANDARDS

	GDC 23	GDC 24	GDC 29	GDC 35	GDC 54	GDC 55	GDC 56	IEEE-279-1971	IEEE-323-1971	IEEE-336-1971	IEEE-338-1971	IEEE-344-1971
REACTOR WATER CLEANUP LOOP HIGH SPACE DIFF. TEMPERATURE	X	X	X		X	X	X	X	X	X	X	X
REACTOR WATER CLEANUP FILTER DEMIN. INLET HIGH TEMPERATURE												
RHR HIGH FLOW	X	X	X		X	X	X	X	X	X	X	X
CONDENSER LOW VACUUM	X	X	X			X	X	X	X	X	X	X
MANUAL SWITCH INPUTS	X	X	X					X	X	X	X	X
BYPASS INPUTS	X	X	X		X	X	X	X	X	X	X	X
TRIP LOGIC TRIP ACTUATOR OUTPUTS	X	X	X		X	X	X	X	X	X	X	X

TABLE 7.1-5

PRIMARY CONTAINMENT AND REACTOR VESSEL ISOLATION CONTROL SYSTEM CODES AND STANDARDS

	IEEE-379-1972	R. G. 1.22	R. G.1.29	R. G. 1.30	R. G. 1.47	R. G. 1.53	R. G. 1.62	R. G. 1.70	BTPEICSB10	BTPEICSB21
REACTOR WATER CLEANUP LOOP HIGH SPACE DIFF. TEMPERATURE	X	X	X	X		X		X	X	X
REACTOR WATER CLEANUP FILTER DEMIN. INLET HIGH TEMPERATURE										
RHR HIGH FLOW	X	X	X	X		X		X	X	X
CONDENSER LOW VACUUM	X	X	X	X		X		X	X	X
MANUAL SWITCH INPUTS	X	X	X	X		X	X	X	X	X
BYPASS INPUTS	X	X	X	X		X		X	X	X
TRIP LOGIC TRIP ACTUATOR OUTPUTS	X	X	X	X		X		X	X	X

TABLE 7.1-5

PRIMARY CONTAINMENT AND REACTOR VESSEL ISOLATION CONTROL SYSTEM CODES AND STANDARDS

	BTPEICSB22
REACTOR WATER CLEANUP LOOP HIGH SPACE DIFF. TEMPERATURE	X
REACTOR WATER CLEANUP FILTER DEMIN. INLET HIGH TEMPERATURE	X
RHR HIGH FLOW	X
CONDENSER LOW VACUUM	X
MANUAL SWITCH INPUTS	X
BYPASS INPUTS	X
TRIP LOGIC TRIP ACTUATOR OUTPUTS	X

TABLE 7.1-6

HIGH PRESSURE ECCS (HPCI, ADS A, ADS B NETWORK)
CODES AND STANDARDS

	REACTOR LOW WATER LEVEL	PRIMARY CONTAINMENT HIGH PRESSURE	HPCI EMERG BUS VOLTAGE	HPCI FLOW SUFFICIENT	HPCI BATTERY VOLTAGE	ADS A BATTERY VOLTAGE	ADS A AC INTLK PERMISSIVE	ADS A TIMER	ADS B BATTERY VOLTAGE	ADS B AC INTLK PERMISSIVE	ADS B TIMER	MANUAL SWITCH INPUTS	BYPASS INPUTS	TRIP LOGIC, TRIP ACTUATOR OUTPUTS
IEEE-279-1971	XN	XN	XN	XN	XN	XN	XN	XN	XN	XN	XN	XN	XN	XN
IEEE-308-1974			XN		XN	XN			XN					
IEEE-323-1971	X	X	X	X	XN	XN	X	X	XN	X	X	X	X	X
IEEE-336-1971	X	X	X	X	XN	XN	X	X	XN	X	X	X	X	X
IEEE-344-1971	X	X	X	X	XN	XN	X	X	XN	X	X	X	X	X
IEEE-379-1972	XN	XN	XN	XN	XN	XN	XN	XN	XN	XN	XN	XN	XN	XN
RG 1.6			XN		XN	XN			XN					
RG 1.22	X	X	X	X	X	X	X	X	X	X	X	X		
RG 1.29														
RG 1.32														
RG 1.47														
RG 1.53	XN	XN	XN	XN	XN	XN	XN	XN	XN	XN	XN	XN	XN	XN
RG 1.62														
GDC 13	X	X	X	X	X	X	X		X	X				
GDC 19			X									X		
GDC 20	XN	XN	XN	XN	XN	XN	XN	XN	XN	XN	XN		XN	
GDC 21	XN	XN	XN	XN	XN	XN	XN	XN	XN	XN	XN	XN	XN	XN
GDC 22	XN	XN	XN	XN	XN	XN	XN	XN	XN	XN	XN	XN	XN	XN
GDC 23	XN	XN	XN	XN	XN	XN	XN	XN	XN	XN	XN	XN	XN	XN
GDC 24	X	X	X	X	X	X	X	X	X	X	X	X	X	X
GDC 29	XN	XN	XN	XN	XN	XN	XN	XN	XN	XN	XN	XN	XN	XN
GDC 34	XN	XN	XN	XN	XN	XN	XN	XN	XN	XN	XN	XN	XN	XN
GDC 35	XN	XN	XN	XN	XN	XN	XN	XN	XN	XN	XN	XN	XN	XN
GDC 37	XN	XN	XN	XN	XN	XN	XN	XN	XN	XN	XN	XN	XN	XN

X = APPLICABLE
XN = APPLICABLE ON A NETWORK BASIS

TABLE 7.1-7

LOW PRESSURE ECCS (CS, RHR NETWORK)
CODES AND STANDARDS

	REACTOR LOW WATER LEVEL	DRYWELL HIGH PRESSURE	HPCI EMERGENCY BUS VOLTAGE	HPCI FLOW SUFFICIENT	HPCI BATTERY VOLTAGE	CS/RHR A BATTERY VOLTAGE	CS/RHR A EMERG BUS VOLTAGE	CS/RHR A FLOW SUFFICIENT	CS/RHR A INJECTION VALVE P	RHR B BATTERY VOLTAGE	RHR B BUS VOLTAGE	RHR B SUFFICIENT	RHR B INJEC-TION VALVE P	MANUAL SWITCH	BYPASS INPUTS	TRIP LOGIC TRIP ACTUATOR INPUTS
IEEE-279-1971	XN	XN	XN	XN	XN	XN	XN	XN	XN	XN	XN	XN	XN	XN	XN	XN
IEEE-308-1971			XN		XN	XN	XN			XN	XN					
IEEE-323-1971	X	X	X	X	XN	XN	XN	X	X	XN	XN	X	X	X	X	X
IEEE-336-1971	X	X	X	X	XN	XN	XN	X	X	XN	XN	X	X	X	X	X
IEEE-344-1971	X	X	X	X	XN	XN	XN	X	X	XN	XN	X	X	X	X	X
IEEE-379-1972	XN	XN	XN	XN	XN	XN	XN	XN	XN	XN	XN	XN	XN	XN	XN	XN
RG 1.6			XN		XN	XN	XN			XN	XN					
RG 1.22	X	X	X	X	X	X	X	X	X	X	X	X	X	X		X
RG 1.29																
RG 1.32																
RG 1.47																
RG 1.53																
RG 1.62																
GDC 13	X	X	X	X	X	X	XN	X	X	X	XN	X	X			
GDC 19			X											X		
GDC 20	XN	XN	XN	XN	XN	XN	XN	XN	XN	XN	XN	XN	XN		XN	XN
GDC 21	XN	XN	XN	XN	XN	XN	XN	XN	XN	XN	XN	XN	XN	XN	XN	XN
GDC 22	XN	XN	XN	XN	XN	XN	XN	XN	XN	XN	XN	XN	XN	XN	XN	XN
GDC 23	XN	XN	XN	XN	XN	XN	XN	XN	XN	XN	XN	XN	XN	XN	XN	XN
GDC 24	X	X	X	X	X	X	X	X	X	X	X	X	X	X	X	X
GDC 29	XN	XN	XN	XN	XN	XN	XN	XN	XN	XN	XN	XN	XN	XN	XN	XN
GDC 34	XN	XN	XN	XN	XN	XN	XN	XN	XN	XN	XN	XN	XN	XN	XN	XN
GDC 35	XN	XN	XN	XN	XN	XN	XN	XN	XN	XN	XN	XN	XN	XN	XN	XN
GDC 37	XN	XN	XN	XN	XN	XN	XN	XN	XN	XN	XN	XN	XN	XN	XN	XN

X = APPLICABLE
XN = APPLICABLE ON NETWORK BASIS

TABLE 7.1-8

PROCESS RADIATION MONITORING CODES AND STANDARDS

SYSTEM	CODE OR STANDARD
Main Steamline	10 CFR 50.34
	10 CFR 50.36
	10 CFR 50.55a
	IEEE-279-1971
	IEEE-323-1971(1)
	IEEE-338-1975
	IEEE-344-1971(1)
	IEEE-379-1972
	R.G. 1.22
	R.G. 1.29
	R.G. 1.30
	R.G. 1.47
	R.D. 1.53
	GDC 1
	GDC 2
	GDC 3
	GDC 4
	GDC 13
	GDC 20
	GDC 21
	GDC 22
	GDC 23
	GDC 24
	GDC 29
	BTPEICSB-10
	BTPEICSB-21
	BTPEICSB-22

See Table 7.1-3 for Notes

TABLE 7.1-9

LEAK DETETION SYSTEM CODES AND STANDARDS

	Systems Affected	10 CFR 50.55a	10 CFR 50.34	10 CFR 50.36	IEEE-279-1971	IEEE-323-1971 (1)	IEEE-338-1971	IEEE-344-1971 (1)	IEEE-379-1972	RG 1.22	RG 1.29
HIGH TEMPERATURE AND Δ TEMPERATURE	MSL										
	RCIC	X	X	X	X	X	X	X	X	X	X
	RHR										
	RWCU										
	HPCI										
HIGH FLOW (3)	MSL	X	X	X	X	X	X	X	X	X	X
	RCIC										
	RHR										
	RWCU										
	HPCI										
LOW RV WATER LEVEL (3)	MSL	X	X	X	X	X	X	X	X	X	X
HIGH PRESSURE (3)	RCIC	X	X	X	X	X	X	X	X	X	X
	RHR										
HIGH Δ FLOW	RWCU	X	X	X	X	X	X	X	X	X	X
SUMP FILL RATE (3)		X	X	X			X				
RECIRCULATION PUMP LEAK PRESSURE FLOW (3)		X	X	X			X				
SAFETY RELIEF VALVE DISCHARGE TEMPERATURE		X	X	X			X				

TABLE 7.1-9

LEAK DETETION SYSTEM CODES AND STANDARDS

	Systems Affected	RG 1.47	RG 1.53	RG 1.68	RG 1.75	GDC 1	GDC 2	GDC 3	GDC 4	GDC 10	GDC 13	GDC 19	GDC 20	GDC 21	GDC 22
HIGH TEMPERATURE AND Δ TEMPERATURE	MSL														
	RCIC	X	X	X	X	X	X	X	X	X	X	X	X	X	X
	RHR														
	RWCU														
	HPCI														
HIGH FLOW (3)	MSL	X	X	X	X	X	X	X	X	X	X	X	X	X	X
	RCIC														
	RHR														
	RWCU														
	HPCI														
LOW RV WATER LEVEL (3)	MSL	X	X	X		X	X	X	X	X	X	X	X	X	X
HIGH PRESSURE (3)	RCIC	X	X	X	X	X	X	X	X	X	X	X	X	X	X
	RHR														
HIGH Δ FLOW	RWCU	X	X	X	X	X	X	X	X	X	X	X	X	X	X
SUMP FILL RATE (3)						X	X	X	X		X				
RECIRCULATION PUMP LEAK PRESSURE FLOW (3)						X	X	X	X	X	X				
SAFETY RELIEF VALVE DISCHARGE TEMPERATURE						X	X	X	X	X	X				

TABLE 7.1-9

LEAK DETETION SYSTEM CODES AND STANDARDS

	Systems Affected	GDC 23	GDC 24	GDC 29	GDC 30	GDC 33	GDC 34	GDC 35	GDC 54	GDC 55	GDC 56
HIGH TEMPERATURE AND Δ TEMPERATURE	MSL										
	RCIC	X	X	X	X	X	X		X	X	X
	RHR										
	RWCU										
	HPCI										
HIGH FLOW (3)	MSL	X	X	X	X	X	X		X	X	
	RCIC										
	RHR										
	RWCU										
	HPCI										
LOW RV WATER LEVEL (3)	MSL	X	X	X	X	X	X		X	X	
HIGH PRESSURE (3)	RCIC	X	X	X	X	X	X		X	X	X
	RHR										
HIGH Δ FLOW	RWCU	X	X	X	X	X	X		X	X	
SUMP FILL RATE (3)					X	X		X			
RECIRCULATION PUMP LEAK PRESSURE FLOW (3)					X	(2)					
SAFETY RELIEF VALVE DISCHARGE TEMPERATURE					X	X					

(1) See Table 7.1-3 for further discussion.

(2) Flow only.

(3) Contribute to drywell leak detection.

TABLE 7.1-10

REACTOR PROTECTION SYSTEM
SENSOR SUFFIX LETTERS AND DIVISION ALLOCATION*

TOTAL NUMBER SENSORS	DIVISION 1A	DIVISION 1B	DIVISION 2A	DIVISION 2B
	Trip Logic A1	Trip Logic B1	Trip Logic A2	Trip Logic B2
4	A	B	C	D
8	A,E	B,F	C,G	D,H
16	A,E,J,N	B,F,K,P	C,G,L,R	D,H,M,S
	Part of Trip System A	Part of Trip System B	Part of Trip System A	Part of Trip System B

* This Division does not apply to the APRM system which must have a special four group arrangement to allow for maintenance bypassing without violating the single failure criteria (See Table 7.1-11).

TABLE 7.1-11

FOUR DIVISION GROUPING FOR NEUTRON MONITORING SYSTEM

STANDARD 4 PENET GROUPING	A		C		D		B	
WIREWAY	NA		NB		NC		ND	
SRM	A		B		C		D	
IRM	A	E	B	F	C	G	D	H
APRM CHANNEL DESIG.	1		2		3		4	
RPS TRIP LOGIC	A1		B1		A2		B2	

NOTES:

1. Penetrations across top of table serve APRM's, IRM'S, SRM's and the RPS Trip Logics directly below them.
2. Horizontal zoning represents LPRM Cable distribution to APRM's from various penetrations, e.g., Penetration B carries cable for LPRM's going to APRM Channel 4.

TABLE 7.1-12

EMERGENCY CORE COOLING SYSTEM AND RCIC

SENSOR SUFFIX LETTERS AND DIVISION ALLOCATION

ENERGIZE-TO-OPERATE

DIVISION I	DIVISION II
SENSOR SUFFIX LETTERS	SENSOR SUFFIX LETTERS
A, C	B, D
Operate ECCS Division 1 directly and ECCS Division 2 through isolation devices	Operate ECCS Division 2 directly and ECCS Division 1 and RCIC through isolation devices

7.2 REACTOR TRIP SYSTEM - (REACTOR PROTECTION SYSTEM) - INSTRUMENTATION AND CONTROLS

7.2.1 DESCRIPTION

7.2.1.1 System Description

7.2.1.1.1 Identification

The reactor protection system includes the motor-generator power supplies, sensors, relays, bypass circuitry, and switches that cause rapid insertion of control rods (scram) to shut down the reactor. It also includes outputs to the process computer system and annunciators, although these latter two systems are not part of the reactor protection system. Trip signals are received from the neutron monitoring system; however, other portions of this system are treated in Sections 7.5, 7.6, and 7.7.

7.2.1.1.2 Classification

The reactor protection system (RPS) is classified as safety Class 2, Seismic Category I, and quality Group B - Electric Safety Class 1E with the exception of the motor-generator power supplies which are non-Class 1E (see Section 3.2). RPS circuits located within the turbine building, (a non-Seismic Category I structure), are designed to meet the requirements of IEEE STD. 279, except for seismic design criteria. (This has been favorably evaluated by the NRC on GESSAR-238 Nuclear Island Standard Design, Docket #STN 50-447, SER - Supplement No. 1, Sections 7.2 and 15.5.)

7.2.1.1.3 Power Sources

The reactor protection system receives power from two high inertia AC motor-generator sets (Dwg. M1-C72-2, Sh. 1). A flywheel provides high inertia sufficient to maintain voltage and frequency within 5% of rated values for at least 1 second for switching or other transients of short duration on the input power to the drive motor. For a loss of power, the electrical distribution system acts very quickly to dynamically brake the rotating MG Set and trip the generator output breaker.

Alternate power is available to either reactor protection system bus. The alternate power switch is interlocked to prevent simultaneous feeding of both buses from the alternate sources. The switch also prevents paralleling of a motor-generator set with the alternate supply. The station batteries supply DC power to the backup scram valve solenoids.

An electrical protection assembly (EPA) consisting of Class 1E protective circuitry is installed between the reactor protection system and each of the power sources (two reactor protection system motor/generator sets and two alternate voltage supplies). The EPA provides redundant protection to the RPS and other systems which receive power from the RPS busses by acting to disconnect the RPS from the power source circuits. See Subsection 8.3.1.6 for a discussion of the RPS power supply.

7.2.1.1.4 Equipment Design

7.2.1.1.4.1 General

Trip systems are designated A or B. Trip system A is comprised of instrument channels A, C, E and G; logics A1 and A2; and the A scram solenoids. Trip system B comprises instrument channels B, D, F and H; logics B1 and B2; and the B scram solenoids. During normal operation, all sensor and trip contacts essential to safety are closed, and channel logics and actuators are energized. In contrast, however, trip contact bypass channels are normally de-energized.

Table 7.2-1 lists the specifications for instruments that provide signals for the system. Figure 7.2-2 summarizes the reactor protection system signals that cause a scram.

The functional arrangement of sensors and channels that constitutes a single logic is shown in Figure 7.2-3. When a channel sensor contact opens, its sensor relay de-energizes its actuators which de-energizes the scram pilot valve solenoids associated with that actuator logic. However, the other scram pilot valve solenoid for each rod must also be de-energized before the rods will be scrammed.

There is one pilot scram valve and two scram valve solenoids for each control rod arranged as shown in Dwgs. M1-C72-2, Sh. 1, M1-C72-2, Sh. 2, M1-C72-2, Sh. 3, and M1-C72-2, Sh. 4. Each pilot scram valve is solenoid operated with normally energized solenoids. The pilot scram valve controls the air supply to the scram valves for each control rod. With either pilot scram valve solenoid energized, air pressure holds the scram valves closed. The scram valves control the supply and discharge paths for control rod drive water. As shown in Figure 7.2-4, one of the scram pilot valve solenoids for each control rod is controlled by Actuator Logic A, the other solenoid by Actuator Logic B.

When both actuator logics are tripped, air is vented from the scram valve and allows control rod drive water to act on the control rod drive piston. Thus, all control rods are scrammed. The water displaced by the movement of each rod piston is vented into a scram discharge volume.

To restore the reactor protection system to normal operation following any single actuator logic trip or a scram, the actuators must be reset manually. After a 10-second delay, reset is possible only if the conditions that caused the scram have been cleared. The actuators are reset by operating a switch in the main control room. Figure 7.2-5 shows the functional arrangement of reset contacts for Actuator Logic A.

There are two DC solenoid operated backup scram valves that provide a second means of controlling the air supply to the scram valves for all control rods. When the solenoid for each backup scram valve is energized, the backup scram valves vent the air supply for the scram valve. This action initiates insertion of any withdrawn control rods regardless of the action of the scram pilot valves. The backup scram valves are energized (initiate scram) when Trip Systems A and B are both tripped.

7.2.1.1.4.2 Initiating Circuits

The reactor protection system scram functions shown in Figure 7.2-2 are discussed in the following paragraphs.

a) Neutron Monitoring System

Neutron monitoring system instrumentation is described in Section 7.6 clarifies the relationship between neutron monitoring system channels, neutron monitoring system logics, and the reactor protection system logics. The neutron monitoring system channels are considered to be part of the neutron monitoring system; however, the neutron monitoring system logics are considered to be part of the reactor protection system. Each neutron monitoring system logic receives signals from one IRM channel and one APRM/OPRM 2-Out-of-4 Voter channel. The position of the mode switch determines which input signals will affect the output signal from the logic.

The neutron monitoring system logics are arranged so that failure of any one logic cannot prevent the initiation of a high neutron flux scram. Each reactor protection system logic receives inputs from two neutron monitoring system logics.

1) IRM System Logic

The IRMs monitor neutron flux between the upper portion of the SRM range to the lower portion of the APRM subsystems. The IRM detectors can be positioned in the core by remote control. The detectors are inserted into the core for a reactor startup and are withdrawn after the reactor reaches a predetermined power level within the power range. The IRM is able to generate a trip signal that can be used to prevent fuel damage resulting from abnormal operational transients that occur while operating in the intermediate power range.

The IRM is divided into two groups of IRM channels arranged in the core as shown in Figure 7.6-3. Four IRM channels are associated with one of the two trip systems of the reactor protection system. Two IRM channels and their trip auxiliaries from each group are installed in one bay of a cabinet; the remaining two channels are installed in a separate bay of the cabinet. Full-length side covers isolate the cabinet bays. The arrangement of IRM channels allows one IRM channel in each group to be bypassed without compromising intermediate range neutron monitoring.

Each IRM channel includes four trip circuits as standard equipment. One trip circuit is used as an instrument trouble trip. It operates on three conditions: (1) when the high voltage drops below a preset level, (2) when one of the modules is not plugged in, or (3) when the OPERATE-CALIBRATE switch is not in the OPERATE position. Each of the other trip circuits can be specified to trip when preset downscale or upscale levels are reached.

The trip functions actuated by the IRM trips are indicated in Table 7.6-3. The reactor mode switch determines whether IRM trips are effective in initiating a rod block or a reactor scram (Dwg. M1-C51-2, Sh. 1). Subsection 7.7.1.2 describes the IRM rod block trips. With the reactor mode switch in REFUEL or STARTUP, an IRM upscale or inoperative trip signal actuates a neutron monitoring system trip of the reactor protection system. Only one of the IRM channels must trip to initiate a

neutron monitoring system trip of the associated trip system of the reactor protection system.

2) APRM/OPRM System Logic

The APRM channels, which include OPRM logic, receive input signals fro the LPRM detectors and provide a continuous indication of average reactor power form a few percent to greater than rated reactor power.

The APRM/OPRM subsystem has sufficient redundant channels to meet industry and regulatory safety criteria. Under the worst permitted input LPRM bypass conditions, the APRM/OPRM subsystem is capable of generating a scram trip signal before the average neutron flux or the magnitude of any thermal-hydraulic instability caused power oscillations increase to the point where fuel damage is probable.

The digital electronics for each APRM channel, via APRL interface hardware, provides trip signals directly to the Reactor Manual Control System (RMCS) and via the APRM 2-out-of-4 voter channels to the Reactor Protection System (RPS)> An APRM upscale trip or inoperative in any two unbypassed APRM channels can initiate an RPS trip in both RPS trip systems. Similarly, an OPRM trip from any two unbypassed APRM channels can initiate an RPS trip in both RPS trip systems. Any single APRM upscale trip or inoperative or OPRM trip will not initiate an NMS trip in the RPS. Table 7.6-4 itemizes the APRM system trip functions.

Any one unbypassed APRM can initiate a rod block, depending upon the position of the reactor mode switch. Section 7.7.1.2 describes the APRM rod block functions.

The APRM Simulated Thermal Power – Upscale rod block and the APRM Simulated Thermal Power – Upscale scram trip setpoints vary as a function of reactor recirculation loop flow. The OPRM trip output to the RPS is automatically bypassed when the reactor is operating below the lower power limit or above the upper flow limit of the OPRM trip enabled region, the limits for which are defined in Technical Specifications. The trip setpoints are given in the plant Technical Requirements Manual.

Manually moving the reactor mode switch out of the RUN position to any other position causes the APRM rod block and APRM neutron flux scram setpoints to be lowered. The manual positioning of the reactor mode switch is governed by the standard reactor startup (shutdown) procedure. The operator can bypass the trips from any one APRM channel, but only one APRM channel may be bypassed at any time. No APRM voter channels may be bypassed.

b) Reactor Pressure

Reactor pressure is measured at two locations. A pipe from each location is routed through the primary containment and terminates in the reactor building. Two local panel mounted, non-indicating pressure switches monitor the pressure in each pipe. Cables from these switches are routed to the control room. One pair of the switches is physically separated from the other pair. Each switch provides a high pressure signal to one channel. The

switches are arranged so that two switches provide an input to Trip System A while the two remaining switches provide an input to Trip System B as shown in Figure 7.2-3. The physical separation and the signal arrangement ensure that no single physical event can prevent a scram caused by reactor vessel high pressure.

The environmental conditions for RPS are described in Section 3.11. The piping arrangement of the reactor pressure sensors is shown on Dwgs. M-141, Sh. 1, and M-142, Sh. 1.

The discussion of diversity for reactor vessel high pressure is provided in Subsection 7.2.1.1.4.5.

c) Reactor Vessel Water Level

Reactor vessel low water level signals are initiated from indicating type differential pressure switches which sense the difference between the pressure due to a constant reference column of water and the pressure due to the actual water level in the vessel. The switches are arranged on two sets of taps in the same way as the nuclear system high pressure switches (Figure 7.2-3). Two instrument lines attached to taps, one above and one below the water level on the reactor vessel, are required for the differential pressure measurement for each switch. The two pairs of lines terminate outside the primary containment and inside the reactor building; they are physically separated from each other and tap off the reactor vessel at widely separated points. Other systems sense pressure and level from these same pipes. The physical separation and signal arrangement assure that no single physical event can prevent a scram due to reactor vessel low water level.

Diversity of trip initiation for breaks in the primary pressure boundary is provided by reactor vessel low water level trip signals and high drywell pressure trip signals. If a break in the primary system boundary were to occur, a volume of primary coolant would be released to the drywell in the form of steam. This release would cause reactor vessel water level to decrease and drywell pressure to increase resulting in independent protective action initiation. These variables are independent of one another and provide diverse protective action for this condition.

Environmental conditions for the RPS are described in Section 3.11. The piping arrangement of the reactor vessel low water level sensors is shown on Dwgs. M-141, Sh. 1, and M-142, Sh. 1.

d) Turbine Stop Valve

Turbine stop valve closure inputs to the reactor protection system come from position switches mounted on the four turbine stop valves. Each of the double-pole, single-throw switches opens before the valve is more than 10% closed to provide the earliest positive indication of closure. Either of the two channels associated with one stop valve can signal valve closure, as shown in Figure 7.2-7. The logic is arranged so that closure of three or more valves initiates a scram.

Turbine stop valve closure trip channel operating bypasses are described in Section 7.2.1.1.4.4.2.

Diversity of trip initiation for increases in reactor vessel pressure due to termination of steam flow by turbine stop valve or control valve closure is provided by reactor vessel high pressure trip signals. A closure of the turbine stop valves or control valves at steady state conditions would result in an increase in reactor vessel pressure. If a scram was not initiated from these closures, a scram would occur from high reactor vessel pressure. Reactor vessel high pressure is an independent variable for this condition and provides diverse protective action.

The environmental conditions for the RPS are described in Section 3.11.

e) Turbine Control Valve

Turbine control valve fast closure inputs to the reactor protection system come from oil line pressure switches on each of four fast acting control valve hydraulic mechanisms. These hydraulic mechanisms are part of the turbine control and are used to effect fast closure of the turbine control valves. These pressure switches provide signals to the reactor protection system. If hydraulic oil line pressure is lost, a turbine control valve fast closure scram is initiated.

Turbine control valve fast closure trip channel operating bypasses are described in Subsection 7.2.1.1.4.4.2.

The discussion of diversity for turbine control valve fast closure is the same as that for turbine stop valve closure provided in Subsections 7.2.1.1.4.2(d) and 7.2.1.1.4.5.

The environmental conditions for the RPS are described in Section 3.11. The piping arrangement of the turbine control valve fast closure pressure switch is shown on Dwg. M1-C72-2, Sh. 3.

f) Main Steamline Isolation Valves

Position switches mounted on the eight main steamline isolation valves signal main steamline isolation valve closure to the reactor protection system. Each of the double-pole, single-throw switches is arranged to open before the valve is more than 10% closed to provide the earliest positive indication of closure. Either of the two channels associated with one isolation valve can signal valve closure. To facilitate the description of the logic arrangement, the position-sensing channels for each valve are identified and assigned to reactor protection system logics as follows:

Valve Identification	Position-Sensing Channels	Trip Channel Relays	Trip Logic Assignment
Main steamline A,	F022A	A, B	A1, B1
inboard valve	(1) and (2)		
Main steamline A,	F028A	A, B	A1, B1
outboard valve	(1) and (2)		

Valve Identification	Position-Sensing Channels	Channel Relays	Trip Logic Assignment
Main steamline B,	F022B	E, D	A1, B2
inboard valve	(1) and (2)		
Main steamline B,	F028B	E, D	A1, B2
outboard valve	(1) and (2)		
		Trip	
Main steamline C,	F022C	C, F	A2, B1
inboard valve	(1) and (2)		
Main steamline C,	F028C	C, F	A2, B1
outboard valve	(1) and (2)		
Main steamline D,	F022D	G, H	A2, B2
inboard valve	(1) and (2)		
Main steamline D,	F028D	G, H	A2, B2
outboard valve	(1) and (2)		

Thus, each logic receives signals from the valves associated with two steamlines (see Figure 7.2-8). The arrangement of signals within each logic requires closing of at least one valve in each of the steamlines associated with that logic to cause a trip of that logic. For example, closure of the inboard valve of steamline A and the outboard valve of steamline C causes a trip of logic B1. This, in turn, causes Trip isolation of two steamlines causing a scram due to valve closure. Closure of one valve in three or more steamlines causes a scram. Wiring for the position sensing channels from one position switch is physically separated in the same way that wiring to duplicate sensors on a common process tap is separated. The wiring for position-sensing channels feeding the different trip logics of one trip system is also separated.

Main steamline isolation valve closure trip channel operating bypasses are described in Subsection 7.2.1.1.4.4.3.

Diversity of trip initiation for increases in reactor vessel pressure due to main steam isolation is provided by reactor vessel high pressure trip signals. A closure of the MSIVs at steady state conditions would cause an increase in reactor vessel pressure. If a scram was not initiated from MSIV closure, a scram would occur from high reactor vessel pressure. These variables are independent and provide diverse protective action for this condition.

The environmental conditions for the RPS are described in Section 3.11.

g) Scram Discharge Volume

Four non-indicating level switches (one for each channel and four level indicating switch (trip unit) transmitter combinations (one transmitter trip unit combination for each channel)

provide scram discharge volume (SDV) high water level inputs to the four RPS channels. This arrangement provides sensor diversity, as well as redundancy, to assure that no single event could prevent a scram caused by SDV high water level. An automatic scram is initiated at a predetermined water level when sufficient SDV capacity still remains to accommodate a scram.

Scram discharge volume water level trip channel operating bypasses are described in Subsection 7.2.1.1.4.4.4.

The scram discharge volume function is to receive water which is discharged from the control rod drives during a scram. If at the completion of the scram the level of water in the scram discharge volume is greater than the trip setting, the RPS cannot be reset until the discharge volume has been drained. In addition, as described in the previous paragraph, the trip setting has been selected such that sufficient volume would be available to receive a full discharge of CRD water in the event that the scram discharge volume high level trip does not occur and subsequent scram protection is required.

The environmental conditions for the RPS are described in Section 3.11. The piping arrangement of the scram discharge volume level sensors is shown on Dwgs. M-146, Sh. 1, and M-147, Sh. 1.

h) Drywell Pressure

Drywell pressure is monitored by four non-indicating pressure switches mounted on instrument racks outside the drywell in the secondary containment. Pipes that terminate in the secondary containment connect the switches with the drywell interior. The switches are physically separated and electrically connected to the reactor protection system so that no single event will prevent a scram caused by drywell high pressure. Cables are routed from the switches to the main control room. Each switch provides an input to one channel (see Figure 7.2-3).

The discussion of diversity for high drywell pressure is provided in Subsection 7.2.1.1.4.5.

The environmental conditions of the RPS are described in Section 3.11.

i) Manual Scram

A scram can be initiated manually. There are four scram buttons, one for each division logic (A1, A2, B1, and B2). To initiate a manual scram, at least one button in each trip system must be depressed. The manual scram logic is the same as the automatic scram logic. The manual scram buttons are arranged in two groups of two switches. One group contains the A1 and B1 switches and A2 and B2 are in the other group. The switches in each group are located close enough to permit one hand motion to initiate a scram. By operating the manual scram button for one logic at a time and then resetting that logic, each actuator logic can be tested for manual scram capability. The reactor operator also can scram the reactor by interrupting power to the reactor protection system or by placing the mode switch in its shutdown position.

7.2.1.1.4.3 Logic

The basic logic arrangement of the reactor protection system is illustrated in Dwg. M1-C72-2, Sh. 1. The system is arranged as two separately powered trip systems. Each trip system has two logics as shown in Figure 7.2-4. Each logic receives input signals from at least one channel for each monitored variable. At least four channels for each monitored variable are required, one for each of its four automatic or manual logics.
Channel and logic relays are fast-response, high-reliability relays. Power relays for interrupting the scram pilot valve solenoids have high current carrying capabilities and are highly reliable. All reactor protection system relays are selected so that the continuous load will not exceed 50% of the continuous duty rating. The time requirements for control rod movement are discussed in Subsection 4.6.3.

The time response for RPS sensor and sensor trip to actuators de-energized is provided in FSAR Table 7.3-28.

Each logic provides two inputs into each of the actuator logics of one trip system as shown in Figure 7.2-5. Thus, either of the two logics associated with one trip system can produce a trip-system trip. The logic is a one-out-of-two twice arrangement. To produce a scram, the actuator logics of both trip systems must be tripped. The overall logic of the reactor protection system is termed "one-out-of-two taken twice."

Diversity of variables is provided for the RPS but not in the logic. One-out-of-two twice logic is utilized, but the logic channels are identical. Diversity would imply the use of different types of logic of each channel.

The RPS reset switch is used to momentarily bypass the seal-in contacts of the final actuators of the reactor shutdown system. The reset is effected in conjunction with auxiliary relays. If a single channel is tripped, the reset is accomplished immediately upon operation of the reset switch. On the other hand, if a reactor scram condition is present, manual reset is prohibited for a 10-second period to permit the control rods to achieve their fully inserted position.

7.2.1.1.4.4 Scram Operating Bypasses

A number of manual and automatic scram bypasses are provided to accommodate the varying protection requirements that depend on reactor conditions.

All manual bypass switches are in the main control room under the direct control of the main control room operator. The bypass status of trip system components is continuously indicated in the main control room.

7.2.1.1.4.4.1 Neutron Monitoring System

Bypasses for the neutron monitoring system channels and are described below.

The neutron monitoring scram logic trip outputs for IRM and APRM/OPRM can be bypassed by hand operated keylocked selector switches located on the reactor control

benchboard in the main control room.

The bypasses for APRM channels 1, 2, 3 & 4 are controlled by one fiber-optic selector switch. Bypassing an APRM channel also bypasses the associated OPRM channel. None of the four APRM 2-out-of-4 voter channels can be bypassed. The bypasses for IRM channels A, C, E and G are controlled by one selector switch and the bypasses for IRM channels B, D, F and H are controlled by a separate second selector switch.

Each APRM or IRM bypass switch can bypass only one NMS channel at any time.

Bypassing an APRM/OPRM or an IRM channel will not inhibit the neutron monitoring system from providing protective action when required.

7.2.1.1.4.4.2 Turbine Stop Valve and Turbine Control Valve Fast Closure

Turbine first stage pressure is sensed from two physically separate and redundant pressure taps. Each pressure tap is piped to two pressure switches which sense first stage pressure. Redundancy has been achieved by connecting one pressure switch output in parallel with each of the turbine stop valve and turbine control valve fast closure trip contacts in each of four scram logic channels.

The turbine stop valve closure scram and turbine control valve fast closure scram are automatically bypassed if the turbine first stage pressure is less than 26% of the rated power. Closure of these turbine valves below a low initial power level does not threaten the integrity of any radioactive material release barrier. Turbine stop valve closure and turbine control valve fast closure trip bypass is effected by four pressure switches associated with the turbine first stage. Any one channel in a bypass state produces a control room annunciation.

The switches are arranged so that no single failure can prevent a turbine stop valve closure scram or turbine control valve fast closure scram. In addition, this bypass is automatically removed when the turbine first stage pressure exceeds the setpoint corresponding to 26% of rated power.

7.2.1.1.4.4.3 Main Steamline Isolation Valves

At plant shutdown and during plant startup, a bypass is required for the main steamline isolation valve closure scram trip in order to properly reset the Reactor Protection System. This bypass has been designed to be in effect when the mode switch is in the shutdown, refuel or startup position. The bypass allows plant operation when the main steam line isolation valves are closed during low power operation. The bypass is removed when the mode switch is placed on RUN.

The discussion of diversity for main steamline isolation valve closure is provided in Subsections 7.2.1.1.4.2(f) and 7.2.1.1.4.5.

7.2.1.1.4.4.4 Scram Discharge Volume Level

The scram discharge high water level trip bypass is controlled by the manual operation of two keylocked switches, a bypass switch, and the mode switch. The mode switch must be in the

SHUTDOWN or REFUEL position. Four bypass channels emanate from the four banks of the RPS mode switch and are connected into the RPS logic. This bypass allows the operator to reset the reactor protection system scram relays so that the system is restored to operation allowing the operator to drain the scram discharge volume. Resetting the trip actuators opens the scram discharge volume vent and drain valves. An annunciator in the main control room indicates the bypass condition.

The discussion of diversity of the scram discharge volume level trip is provided in Subsection 7.2.1.1.4.2(g).

7.2.1.1.4.4.5 Mode Switch in Shutdown

The scram initiated by placing the mode switch in SHUTDOWN is automatically bypassed after a short time delay. The bypass allows the control rod drive hydraulic system valve lineup to be restored to normal. An annunciator in the control room indicates the bypassed condition.

Redundancy of the operating bypass with the mode switch in shutdown is provided by four separate time delay relays connected in a manner which provides redundancy of the bypass operation, but will not inhibit the scram initiation.

Diversity of variables is not provided for this function because placing of the mode switch in shutdown is the normal method for shutting down the reactor and requires only operator action for initiation. The mode switch in shutdown is not a safety function and does not require diversity.

7.2.1.1.4.4.6 Maintenance, Calibration or Test Bypasses

Each reactor scram sensor can be removed for maintenance, test or calibration. When a channel is removed from service, annunciation of the administrative tripping of one of the four trip channels or alarming of the channel bypass is provided in the main control room. Unnecessary actuation of the RPS trip logic can be prevented by use of an indicating jumper across the RPS Trip Channel logic input from the instrument channel under test. The jumper provides positive indication of channel operation when the bypassed instrument is actuated during the performance of maintenance, test, or calibration, and maintains the monitoring and trip function of the remaining portions of the RPS trip logic while this channel is removed from service.

Individual channels for drywell high pressure, reactor vessel high pressure, reactor vessel low water level, andCRD scram discharge volume high water level, are administratively tripped when any one sensor is removed for maintenance, test or calibration.

An individual channel for neutron monitoring APRM/OPRM or IRM trips can be manually bypassed during any mode of operation. Each bypass is indicated by a light in the main control room.

Main steamline isolation valve closure sensors may be removed from service during operation while the mode switch is in the RUN mode, but this causes a channel trip to occur and is annunciated in the main control room.

Turbine stop valve closure and turbine control valve fast closure sensors may be removed from service during operation. This results in an administratively controlled trip of the sensor channel and annunciation of a logic trip in the main control room.

Administrative controls during maintenance, test, and calibration are specified in the individual maintenance, test, and calibration procedure and in the plant administration procedure manual. A discussion of the bypass indication is provided in Subsection 7.2.1.1.4.4.

7.2.1.1.4.4.7 Interlocks

The scram discharge volume high water level trip bypass signal interlocks with the reactor manual control system to initiate a rod block. The interlock is performed using isolated relay contacts so that no failure in the control system can prevent a scram.

Reactor vessel low water level, reactor vessel pressure, and drywell high pressure signals are shared with the primary containment and reactor vessel isolation system. The sensors feed relays in the reactor protection system whose contacts interlock with the primary containment and reactor vessel isolation system.

A discussion of the Neutron Monitoring System interlocks to rod block functions is provided in Subsection 7.6.1a.5.

The reactor mode switch has interlocks to other than the Reactor Protection System. These interlocks are discussed in Subsection 7.6.1a.6.

7.2.1.1.4.4.8 RPS Shorting Links (Neutron Monitoring System)

RPS “shorting links” are installed in the Reactor Manual Scram Trip Channel A1, B1, A2 and B2 Circuits. The shorting links, when removed, add the neutron monitoring trip inputs to the Reactor Manual Scram Trip Logic. The IRM and SRM trip inputs will be applied with the APRM inputs remaining with the 2-out-of-4 Voter. This changes the neutron range monitoring trip logic to a one-out-of-twelve taken once logic. This changes the neutron monitoring trip logic to a one-out-of-eighteen taken once logic. The neutron monitoring system in this configuration provides a full scram in the event of any neutron monitoring trip signal. The shorting links are removed during Shutdown Margin Test RPS Instrumentation as described in the TRM Section 3.10.2.

7.2.1.1.4.5 Redundancy and Diversity

Instrument piping from the reactor vessel is routed through the drywell wall and terminates inside the secondary containment. Instruments mounted on instrument racks in the secondary containment sense reactor vessel pressure and water level information from this piping. Valve position switches are mounted on valves from which position information is required. The sensors for reactor protection system signals from equipment in the turbine building are mounted locally. The two motor generator sets that supply power for the reactor protection system are located in an area where they can be serviced during reactor operation. Cables from sensors and power cables are routed to two reactor protection system cabinets in the relay rooms. One cabinet is used for

each of the two trip systems. The logics of each trip system are isolated in separate bays in each cabinet.

The redundancy requirements for the RPS have been met by the utilization of physically separate sensor taps, sensing lines, sensors, sensor rack locations, cable routing and termination in two separate panels in the control room. By the use of more than one sensor for each RPS variable feeding two separate trip systems and two logic per trip system, redundancy of the RPS system has been achieved. For additional information on redundancy of RPS subsystems, refer to Subsection 7.2.1.1.4.2, paragraphs (a), (b), (c), (d), (e), (f), (g), (h), and (i).

No redundancy of the RPS power supply is provided. There are two MG sets which supply electrical power, one each to two logic channels of the RPS. A loss of one MG set will not inhibit protective action nor cause a scram.

Functional diversity is provided by monitoring independent reactor vessel variables. Pressure, water level, and neutron flux are all independent and are separate inputs to the system. Also, main steam line isolation valve closure, turbine stop valve closure, and turbine control valve fast closure are anticipatory of a reactor vessel high pressure and are separate inputs to the system.

Additional discussions of diversity of RPS variables are provided in Subsection 7.2.1.1.4.2, paragraphs (a), (b), (c), (d), (e), (f), (g), (h), and (i).

7.2.1.1.4.6 Actuated Devices

The actuator logic opens when a trip signal is received, and de-energizes the scram valve pilot solenoids. There are two pilot solenoids per control rod. Both solenoids must de-energize to open the inlet and outlet scram valves to allow drive water to scram a control rod. One solenoid receives its signal from Trip System A and the other from Trip System B. The failure of one control rod to scram will not prevent a complete shutdown.

The individual control rods and their controls are not part of the reactor protection system. For further information on the scram valves and control rods see Subsections 4.2.3 and 4.6-1.

The pilot solenoid valves are supplied from the 120 VAC RPS MG Sets A & B.

In addition to the two scram valves for each control rod drive, there are two backup scram valves which are used to vent the common header for all control rods. Both backup scram valves are energized to initiate venting and are individually supplied with 125 Vdc power from the plant batteries. Any use of plant instrument air system for auxiliary use is so designed that a failure of the air system will cause a safe direction actuation of the safety device.

7.2.1.1.4.7 Separation

Four independent sensor channels monitor the various process variables listed in Subsection 7.2.1.1.4.2. The sensor devices are separated such that no single failure can prevent a scram.

All protection system wiring outside the control system cabinets is run in total enclosed metallic raceway. Physically separated cabinets or cabinet bays are provided for the four scram logics. The RPS sensors and their local racks are shown in Dwg. M1-C72-2, Sh. 1, and M1-C72-2, Sh. 2.

The mode switch, scram discharge volume high water level trip bypass switch, scram reset switch, and manual scram switches are all mounted on one control panel. Each device is mounted in a metal enclosure and has a sufficient number of barrier devices to maintain adequate separation. Conduit is provided from the metal enclosures to the point where adequate physical separation can be maintained without barriers.

The outputs from the logic cabinets to the scram valves are run in four totally enclosed metallic raceways for Trip System A and four for Trip System B. The four totally enclosed metallic raceways match the four scram groups shown in Dwgs. M1-C72-2, Sh. 1, and M1-C72-2, Sh. 2. The groups are selected so that the failure of one group to scram will not prevent a reactor shutdown.

Reactor protection system inputs to annunciators, recorders, and the computer are arranged so that no malfunction of the annunciating, recording, or computing equipment can functionally disable the reactor protection system. Direct signals from reactor protection system sensors are not used as inputs to annunciating or data logging equipment. Relay contact isolation is provided between the primary signal and the information output.

7.2.1.1.4.8 Testability

The reactor protection system can be tested during reactor operation by four separate tests.

The first of these is the manual scram test. By depressing the manual scram button for one trip channel, the actuators are de-energized, opening contacts in the actuator logics. After the first trip channel is reset, the second trip channel is tripped manually and so forth for the four manual scram buttons. It also verifies the ability to de-energize all eight groups of scram pilot valve solenoids by using the manual scram pushbutton switches. In addition to control room and alarm display indications, scram group indicator lights verify that the actuator contacts have opened.

The second test includes calibration of the neutron monitoring system by means of simulated inputs from calibration signal units. Calibration and test controls for the neutron monitoring system are located in the relay rooms and control room. Their physical location places them under direct physical control of the control room operator. Subsection 7.6.1a.5 describes the calibration procedure of the neutron monitoring system.

The third test is the single rod scram test which verifies capability of each rod to scram. Timing traces can be made for each rod scrammed.

The fourth test involves applying a test signal to each reactor protection system channel in turn and observing that a channel or logic trip results. All parts of the RPS trip logic can be tested in overlapping portions, as described in section 7.2.2.1.2. This test also verifies the electrical independence of the channel circuitry. The test signals can be applied to the process type sensing instruments (pressure and differential pressure) through calibration taps. Calibration and test controls for pressure switches, level switches, and valve position switches are located in the turbine building and secondary containment. To gain access to the setting controls on each switch, a

cover plate or sealing device must be removed. The control room supervisory personnel are responsible for granting access to the setting controls. Only properly qualified plant personnel are granted access for the purpose of testing or calibration adjustments.

The alarm display provided with the NSSS process computer verifies the correct operation of many sensors during plant startup and shutdown. Main steamline isolation valve position switches and turbine stop valve position switches can be checked in this manner. The verification provided by the alarm typewriter is not considered in the selection of test and calibration frequencies and is not required for plant safety.

Required sensor response times are determined for each RPS function and are identified in the design specification data sheet as well as Table 7.3-28. The sensor manufacturer provides sensors which meet the required response times and certifies their ability to obtain these values. During preoperational testing, the sensors are tested using an accepted industry method, and the actual response time data are compared to the design requirement for acceptance. In addition, the overall reactor protection system response time is verified during preoperational testing from sensor trip to channel relay de-energization and actuator de-energization, and can be verified thereafter by similar test.

7.2.1.1.5 Environmental Considerations

Electrical modules for the reactor protection system are located in the drywell, the secondary containment, the turbine building and the control room. The environmental conditions for these areas are described in Section 3.11. Sensing elements have enclosures to withstand conditions that may result from a steam or water line break long enough to perform satisfactorily.

7.2.1.1.6 Operational Considerations

7.2.1.1.6.1 Reactor Operator Information

7.2.1.1.6.1.1 Indicators

Scram group indicators extinguish when an actuator logic opens or if a loss of power occurs. Additionally, both Units have Backup Scram indicators which extinguish if a loss of DC power occurs.

Recorders in the main control room also provide information regarding reactor vessel water level, reactor vessel pressure, drywell pressure, and reactor power level. The physical position of RPS relays may be used to identify the individual sensor that tripped in a group of sensors monitoring the same variable.

7.2.1.1.6.1.2 Annunciators

Each reactor protection system input is provided to the annunciator system through isolated relay contacts. Trip system trips also signal the annunciator system. Manual trips signal the annunciator system.

When a reactor protection system sensor trips, it lights an engraved red annunciator window, common to all the channels for that variable, on the reactor control panel in the main control room to indicate the out-of-limit variable. Each trip system lights a red annunciator window to indicate which trip system has tripped. For Unit 1, a loss of power to the Backup Scram trip system, or to some but not all scram groups due to blown scram group fuses is also annunciated on the unit operating benchboard 1C651. A loss of power to the Backup Scram System or to the scram groups for each Unit are also annunciated on the Unit Operating Benchboards (1C651 for Unit 1 and 2C651 for Unit 2). As an annunciator system input, a reactor protection system channel trip also sounds an audible indication, which can be silenced by the operator. The annunciator window lights latch in until reset manually. Reset is not possible until the condition causing the trip has been cleared.

7.2.1.1.6.1.3 Computer Alarms

A computer display identifies each tripped channel.

All reactor protection system trip events are recorded by the process computer system. This permits subsequent analysis of an operational transient that occurs too rapidly for operator comprehension of events as they occur. Use of the alarm display and computer is not required for plant safety. The display of trips is particularly useful in routinely verifying the correct operation of pressure, level, and valve position switches as trip points are passed during startup, shutdown, and maintenance operations.

7.2.1.1.6.2 Reactor Operator Controls

7.2.1.1.6.2.1 Mode Switch

A conveniently located, multiposition keylock mode switch is provided to select the necessary scram functions for various plant conditions. The mode switch selects the appropriate sensors for scram functions and provides appropriate bypasses. The switch also interlocks such functions as control rod blocks and refueling equipment restrictions, which are not considered here as part of the reactor protection system. The switch is designed to provide separation between the four trip channels. The mode switch positions and their related scram functions are as follows:

a) SHUTDOWN

Initiates a reactor scram; bypasses main steamline isolation scram.

b) REFUEL

Selects neutron monitoring system scram for low neutron flux level operation; bypasses main steamline isolation scram.

c) STARTUP

Selects neutron monitoring system scram for low neutron flux level operation, Disables the OPRM trip but does not disable the APRM scram), bypasses main steamline isolation scram.

d) RUN

Selects neutron monitoring system scram for power range operation.

7.2.1.1.6.2.2 Safety-Related Portions of Control Systems Which Inhibit or Limit the Response of the Reactivity Control System

There are no portions of control systems which inhibit or limit the response of the reactivity control system.

7.2.1.1.6.3 Setpoints

Instrument ranges are chosen to cover the range of expected conditions for the variable being monitored. Additionally, the range is chosen to provide the necessary accuracy for any required setpoints and to meet the overall accuracy requirements of the channel.

a) Neutron Monitoring System Trip

To protect the fuel against high heat generation rates, neutron flux is monitored and used to initiate a reactor scram. The neutron monitoring system setpoints and their bases are discussed in Subsection 7.6.1a.5.

b) Reactor Vessel Dome Pressure High Interlock

Excessively high pressure within the reactor vessel threatens to rupture the reactor coolant pressure boundary. A reactor vessel pressure increase during reactor operation compresses the steam voids and results in a positive reactivity insertion; this causes increased core heat generation that could lead to fuel failure and system overpressurization. A scram counteracts a pressure increase by quickly reducing core fission heat generation. The reactor vessel high pressure scram setting is chosen slightly above the reactor vessel maximum normal operation pressure to permit normal operation without spurious scram, yet provide a wide margin to the maximum allowable reactor vessel pressure. The reactor vessel high pressure scram works in conjunction with the pressure relief system to prevent nuclear system pressure from exceeding the maximum allowable pressure. The reactor vessel high pressure scram setting also protects the core from exceeding thermal hydraulic limits that result from pressure increases during events that occur when the reactor is operating below rated power and flow.

c) Reactor Vessel Low Water Level

Low water level in the reactor vessel indicates that the reactor is in danger of being inadequately cooled. Decreasing water level while the reactor is operating at power decreases the reactor coolant inlet subcooling. The effect is the same as raising feedwater temperature. Should water level decrease too far, fuel damage could result as steam forms around fuel rods. A reactor scram protects the fuel by reducing the fission heat generation within the core. The reactor vessel low water level scram setting was selected to prevent fuel damage following abnormal operational transients caused by single equipment malfunctions or single operator errors that result in a decreasing reactor vessel water level.

The scram setting is far enough below normal operational levels to avoid spurious scrams. The setting is high enough above the top of the active fuel to assure that enough water is available to account for evaporation loss and displacement of coolant following the most severe abnormal operational transient involving a level decrease. The selected scram setting was used in developing thermal-hydraulic limits. The limits set operational limits on the thermal power level for various coolant flow rates.

d) Turbine Stop Valve Closure

Closure of the turbine stop valve with the reactor at power can result in a significant addition of positive reactivity to the core as the reactor vessel pressure rise causes steam voids to collapse. The turbine stop valve closure scram initiates a scram earlier than either the neutron monitoring system or reactor vessel high pressure. It is required to provide a satisfactory margin below core thermal-hydraulic limits for this category of abnormal operational transients. The scram counteracts the addition of positive reactivity caused by increasing pressure by inserting negative reactivity with control rods. Although the reactor vessel high pressure scram, in conjunction with the pressure relief system, is adequate to preclude overpressurizing the reactor vessel, the turbine stop valve closure scram provides additional margin to the reactor vessel pressure limit. The turbine stop valve closure scram setting provides the earliest positive indication of valve closure.

e) Turbine Control Valve Fast Closure

With the reactor and turbine generator at power, fast closure of the turbine control valves can result in a significant addition of positive reactivity to the core as reactor vessel pressure rises. The turbine control valve fast closure scram initiates a scram earlier than either the neutron monitoring system or nuclear system high pressure. It is required to provide a satisfactory margin to core thermal-hydraulic limits for this category of abnormal operational transients. The scram counteracts the addition of positive reactivity resulting from increasing pressure by inserting negative reactivity with control rods. Although the reactor vessel high pressure scram, in conjunction with the pressure relief system, is adequate to preclude overpressurizing the reactor vessel, the turbine control valve fast closure scram provides additional margin to the reactor vessel pressure limit. The turbine control valve fast closure scram setting is selected to provide timely indication of control valve fast closure.

f) Main Steamline Isolation

The main steamline isolation valve closure can result in a significant addition of positive reactivity to the core as reactor vessel pressure rises. The main steamline isolation scram setting is selected to give the earliest positive indication of isolation valve closure. The logic allows functional testing of main steamline isolation trip channels by partially closing a main steamline isolation valve.

g) Scram Discharge Volume High Water Level

Water displaced by the control rod drive pistons during a scram goes to the scram discharge volume. If the scram discharge volume fills with water so that insufficient capacity remains for the water displaced during a scram, control rod movement would be hindered during a scram. To prevent this situation, the reactor is scrammed when the

water level in the discharge volume is high enough to verify that the volume is filling up, yet low enough to ensure that the remaining capacity in the volume can accommodate a scram.

h) Drywell High Pressure

High pressure inside the drywell may indicate a break in the reactor coolant pressure boundary. It is prudent to scram the reactor in such a situation to minimize the possibility of fuel damage and to reduce energy transfer from the core to the coolant. The drywell high pressure scram setting is selected to be as low as possible without inducing spurious scrams.

i) Manual Scram

Pushbuttons are located in the control room to enable the operator to shut down the reactor by initiating a scram.

j) Mode Switch in SHUTDOWN

When the mode switch is in SHUTDOWN, the reactor is to be shut down with all control rods inserted. This scram is not considered a protective function, because it is not required to protect the fuel or RCPB and it bears no relationship to minimizing the release of radioactive material from any barrier. The scram signal is removed after a short delay, permitting a scram reset that restores the normal valve lineup in the control rod drive hydraulic system.

7.2.1.1.7 Containment Electrical Penetration Assignment

Refer to Table 6.2-12.

7.2.1.1.8 Cable Spreading Room Description

RPS interconnecting cables, where required to run outside PGCC, are run in identified totally enclosed metallic raceways.

7.2.1.1.9 Control and Relay Rooms

Vertical boards are located on separate Division 1 and 2 floors in separate divisionalized relay rooms. The RPS vertical boards for trip system "A" and trip system "B" are located in Division 1 and 2 floors respectively. The vertical boards are installed on PGCC floor modules and are connected to the field via underfloor ducts and termination cabinets.
The unit operating benchboard for reactor control is located in the main control room.

7.2.1.1.10 Control Boards and their Contents

The Reactor Protection System vertical boards each contain the trip channel and trip system trip relays, test switches, trip indicating lights for the individual trip channels and trip system.

The unit operating benchboard section for reactor control contains the reactor mode switch, bypass switches, scram solenoid valve status indicating lights, and manual scram switches.

7.2.1.1.11 Test Methods that Insure RPS Reliability

Surveillance testing is performed periodically on the reactor protection system during operation. This testing includes sensor calibration, response time testing, trip channel actuation, and trip time measurement with simulated inputs to individual sensors.

Manual scram initiation channel functional tests periodically exercise the energized scram contactor, at a frequency specified in the Technical Specifications.

7.2.1.1.12 Interlock Circuits to Inhibit Rod Motion as Well as Vary the Protective Function

Subsection 7.7.1.11 describes interlock circuits to inhibit rod motion which are derived from neutron flux and recirculation flow measurements. Electrical isolation is provided between the Rod Block Monitor interlock circuits and the APRM protective action circuits.

There are no interlock circuits which inhibit rod motion as well as vary the protective functions.

7.2.1.1.13 ATWS Provisions

ATWS provisions have not been identified for RPS.

7.2.1.2 Design Bases

Design bases information requested by IEEE 279-1971 are discussed in the following paragraphs. These IEEE 279 design bases aspects are considered separately from those broader and detailed design bases for this system cited in Section 7.1.

7.2.1.2.1 Conditions

The generating station conditions which require protective action are identified below:

a) Generator load rejection above 26% of rated power

b) Turbine trip above 26% of rated power

c) Main steamline isolation valve closure during operation in the "Run" mode

d) Pressure regulator failure (open) resulting from low steamline pressure

e) Excess coolant inventory resulting in turbine trip due to high water level

f) Shutdown cooling (RHRS) malfunction causing decreasing coolant temperature

g) Loss of feedwater flow

h) Loss of auxiliary power

i) Recirculation pump seizure

j) Recirculation flow control failure with increasing flow

k) Steam jet air ejector failure followed by low main condenser vacuum trip of the turbine

l) Control rod drop accident

m) Loss-of-coolant accident

n) Main steamline break

o) Feedwater system piping break

p) Failure of air ejector lines - scram occurs when main condenser is isolated causing a turbine trip

q) Malfunction of turbine gland sealing system resulting from turbine trip on high shaft vibration

7.2.1.2.2 Variables

The generating station variables which require monitoring to provide protective actions are identified in the plant Technical Specifications.

7.2.1.2.3 Sensors

A minimum number of LPRMs per APRM are required to provide adequate protective action as defined in Subsection 7.2.2.1.1.1.6. This is the only variable which has spatial dependence as discussed in IEEE 279, paragraph 3.3.

7.2.1.2.4 Operational Limits

Operational limits for each safety-related variable trip function is selected with sufficient margin so that a spurious scram is avoided. Design basis operational limits (i.e., Allowable Values) as listed in the plant Technical Specifications are based on operating experience and constrained by the safety design basis and the safety analyses.

7.2.1.2.5 Margin Between Operational Limits

The margin between operational limits and levels requiring protective action (i.e., the analytical limits) for the reactor protection system parameters as listed in the plant Technical Specifications includes allowance for instrument accuracy, calibration error, and sensor and setpoint drift.

7.2.1.2.6 Levels Requiring Protective Action

The trip setpoints are shown in the plant Technical Requirements Manual. The Allowable Values of the trip setpoints are shown in the plant Technical Specifications.

7.2.1.2.7 Ranges of Energy Supply and Environmental Conditions

The Reactor Protection System (RPS) 120 VAC power is provided by high inertia MG sets. Voltage regulation is designed to respond to a step load change of 50% of rated load with an output voltage change of not more than 15% and output frequency change of not more than 5%. The flywheel on each MG set provides stored energy to maintain voltage and frequency within +5%, for one second, preventing momentary switchyard transients from causing a scram. RPS relays and contactors will operate without failure within the range of ±10% of rated voltage. An alternate source of 120 volt power is provided to each RPS. This unregulated alternate power is provided for the RPS bus when maintenance is required for an MG set.

Environmental conditions for proper operation of the RPS components are described in Section-3.11.

7.2.1.2.8 Unusual Events

Unusual events are defined as malfunctions, accidents, and other events which could cause damage to safety systems. Chapter 15 and Appendix 15A describe the following credible accidents and events; floods, storms, tornadoes, earthquakes, fires, LOCA, pipe break outside containment, and feedwater line break and missiles. Each of these events is discussed below for the subsystems of the RPS.

a) Floods: The buildings containing RPS components have been designed to meet the PMF (Probable Maximum Flood) at the site location. This ensures that the buildings will remain water tight under PMF including wind generated wave action and wave runup. Therefore, none of the RPS functions are affected by flooding.

b) Storms and Tornadoes: The buildings containing RPS components have been designed to withstand all credible meteorological events and tornadoes as described in Subsection 3.3.2. Superficial damage may occur to miscellaneous station property during a postulated tornado, but this will not impair the RPS capabilities.

c) Earthquakes: The structures containing RPS components except the turbine building have been seismically qualified as described in Sections 3.7 and 3.8, and will remain functional during and following a safe shutdown earthquake (SSE). The RPS components contained in the turbine building are back up scram variables for the Reactor Pressure trip.

d) Fires: To protect the RPS in the event of a postulated fire, the RPS trip logics have been divided into four separate sections within two independent RPS panels. The sections are separated by fire barriers. If a fire were to occur within one of the sections or in the area of one of the panels, the RPS functions would not be prevented by the fire. The use of separation and fire barriers ensures that, even though some portion of the system may be affected, the RPS will continue to provide the required protective action. Vertical boards have halon systems which are automatically started in the event of a fire in the panel. A fire detection system using heat detectors and product of combustion detectors is provided in PGCC floor sections and RPS panels mounted on these floor sections. A Halon fire suppression system is provided in the PCCC and RPS Panels.

e) LOCA: The following RPS subsystem components are located inside the drywell and would be subjected to the affects of a design basis loss-of-coolant accident (LOCA):

1) Neutron Monitoring System (NMS) cabling from the detectors to the main control room

2) Reactor vessel pressure and reactor vessel water level instrument taps and sensing lines, which terminate outside the drywell.

These items have been environmentally qualified to remain functional during and following a LOCA as discussed in Section 3.11 and indicated in Table 3.11-1.

f) Pipe Break Outside Secondary Containment: This condition will not affect the ability of the RPS to function.

g) Feedwater Break: This condition will not affect the RPS.

h) Missiles: With the exception of the RPS M-G sets, the RPS equipment is not mounted in a missile zone. The M-G sets may be mounted in a missile zone but they are not required for performance of the RPS safety action (scram).

7.2.1.2.9 Performance Requirements

The minimum performance requirements are shown in Table 7.2-2.
A logic combination (one-out-of-two-twice) of instrument channels trips actuated by abnormal or accident conditions will initiate a scram, and produces independent logic seal-ins within each of the four logic divisions. The trip conditions will be annunciated and recorded on the process computer. The trip seal-in will maintain a scram signal condition at the control rod drive system terminals until the trip channels have returned within their normal operating range and the seal-in is manually reset by operator action. Thus, once a trip signal is present long enough to initiate a scram and the seal-ins, the protective action will go to completion.

7.2.1.3 Final System Drawings

The final RPS drawings are processed at two different levels relative to this document.

First, all the necessary system and subsystem level Piping and Instrumentation Diagrams (P&IDs), Functional Control Diagrams (FCDs), Process Flow Diagrams (PFDs), and channel logic diagrams are provided in this section. This same technique is employed in other sections throughout the document.

Secondly, detailed circuit, component design elements, electrical elementary diagrams, cabinet and panel layout drawing (or similar finite detail design diagrams) are being provided under separate cover as allowed by the NRC regulations. This documentation is complementary to discussions and drawings included in this document.

There are no functional or architectural design basis differences or changes to this system between the approved preliminary PSAR design and the FSAR final design under review. A direct comparison of the subject documents verifies this observation. A list of drawings supplied under separate cover are given in Table 1.7-1.

7.2.2 ANALYSIS

7.2.2.1 Reactor Protection System-Instrumentation and Controls

7.2.2.1.1 General Functional Requirements Conformance

Presented below are analyses to demonstrate how the various general functional requirements and the specific regulatory requirements listed under the reactor protection system design bases (Subsection 7.1.2a.1.1) are satisfied.

7.2.2.1.1.1 Conformance to Design Basis Requirements

7.2.2.1.1.1.1 Design Bases 7.1.2a.1.1.1.1(1)

The reactor protection system is designed to provide timely protection against the onset and consequences of conditions that threaten the integrity of the fuel barrier and the RCPB. Chapter 15 identifies and evaluates events that jeopardize the fuel barrier and RCPB. The methods of assessing barrier damage and radioactive material releases, along with the methods by which abnormal events are sought and identified, are presented in that chapter.

Design basis from Subsection 7.1.2a.1.1 requires that the precision and reliability of the initiation of reactor scrams be sufficient to prevent, or limit, fuel damage and to prevent damage to the RCPB as a result of excessive internal pressure.

Table 7.2-1 provides a listing of the sensors selected to initiate reactor scrams and delineates the specified accuracy. Accuracy, transient response, and time response for the sensed variables establishes the precision of the RPS variable sensors.

Reliability of the RPS is assured through the selection of reliable components and performance of analyses.

The selection of tentative scram trip settings has been developed through analytical modeling, experience, historical use of initial setpoints and adoption of new variables and setpoints as

experience was gained. The initial setpoint selection method provided for settings which were sufficiently above the normal operating levels (to preclude the possibilities of spurious scrams or difficulties in operation), but low enough to protect the fuel and pressure barrier. As additional information became available or systems were changed, additional scram variables were provided using the above method for initial setpoint selection. The selected scram settings are analyzed to verify that they are conservative and that the fuel, fuel barriers, and RCPB are adequately protected. In all cases, the specific scram trip point selected is a conservative value that prevents damage to the fuel or RCPB taking into consideration previous operating experience and the analytical models.

7.2.2.1.1.1.2 Design Basis 7.1.2a.1.1.1.1(2)

The scram initiated by reactor vessel high pressure, in conjunction with the pressure relief system, is sufficient to prevent damage to the reactor coolant pressure boundary as a result of internal pressure. The main steamline isolation valve closure scram provides a greater margin to the reactor vessel pressure safety limit than does the high pressure scram. For turbine-generator trips, the stop valve closure scram and turbine control valve fast closure scram provide a greater margin to the reactor vessel pressure safety limit than does the high pressure scram. Chapter 15 identifies and evaluates accidents and abnormal operational events that result in reactor vessel pressure increases. In no case does pressure exceed RCPB safety limits.

7.2.2.1.1.1.3 Design Basis 7.1.2a.1.1.1.1(3)

The scram initiated by the reactor vessel low water level satisfactorily limits the radiological consequences of gross failure of the fuel or reactor coolant pressure boundary. Chapter 15 evaluates gross failures of the fuel and RCPB. In no case does the release of radioactive material to the environs result in exposures which exceed the guide values of applicable published regulations.

7.2.2.1.1.1.4 Design Basis 7.1.2a.1.1.1.1(4)

Scrams are initiated by variables which are designed to monitor fuel temperature and protect the RCPB. The neutron monitoring system monitors fuel temperature indirectly using incore detectors. The incore detectors monitor the reactor power level by detecting the neutron level in the core. Reactor power level is directly proportionate to neutron level and the heat generated in the fuel. Although the neutron monitoring system does not monitor fuel temperature directly, by establishing a correlation between fuel temperature and reactor power level, scram setpoints can be determined for protective action which will prevent fuel damage.

The RCPB is protected by monitoring parameters which indicate reactor pressure directly or anticipate reactor pressure increases. Reactor pressure is monitored directly by pressure sensors which are connected directly to the reactor pressure vessel through sensing lines and pressure taps. In addition, reactor pressure transients are anticipated by monitoring the closure of valves which shut off the flow of steam from the reactor pressure vessel and cause rapid pressure increases. The variables monitored to anticipate pressure transients are Main Steamline Isolation Valve position, Turbine Stop Valve position, and Turbine Control Valve (Fast Closure) position. If

any of these valves were to close, pressure would rise very rapidly, therefore, this condition is anticipated and a trip is initiated prior to any pressure transient occurring.

Chapter 15 identifies and evaluates those conditions which threaten fuel temperature and RCPB integrity. In no case does the core exceed a safety limit.

7.2.2.1.1.1.5 Design Basis 7.1.2a.1.1.1.1(5)

The scrams initiated by the neutron monitoring system, drywell pressure, reactor vessel pressure, reactor vessel water level, turbine stop valve closure, and turbine control valve fast closure variables will prevent fuel damage. The scram setpoints for these variables are identified in the plant Technical Requirements Manual and have been designed to cover the expected range of magnitude and rates of change during abnormal operational transients without fuel damage. The response time requirements for these variables are identified in Table 7.3-28. Chapter 15 identifies and evaluates those conditions which threaten fuel integrity. With the selected variables and scram setpoints, adequate core margins are maintained relative to thermal-hydraulic safety limits.

7.2.2.1.1.1.6 Design Basis 7.1.2a.1.1.1.1(6)

Neutron flux is the only essential variable of significant spatial dependence that provides inputs to the reactor protection system. Neutron flux is monitored both as an indication of average reactor power (APRM upscale trips) and as in indication of thermal-hydraulic instability caused power oscillations (OPRM trip). The basis for the number and locations is discussed below. The other requirements are fulfilled through the combination of logic arrangement, channel redundancy, wiring scheme, physical isolation, power supply redundancy and component environmental capabilities.
Two transient analyses were used to determine the minimum number and physical location of required LPRMs for each APRM for average power monitoring.

a) The first analysis was performed with operating conditions of 100% of originally-licensed reactor power and 100% core flow (100 x 10^6 lbm/hr) using a continuous rod withdrawal of the maximum worth control rod. In the analysis, LPRM detectors are mathematically removed from the APRM channels. This process is continued until the minimum numbers and locations of detectors needed to provide protective action are determined for this condition.

b) The second analysis was performed with operating conditions of 100% of originally-licensed reactor power and 100% core flow (100 x 10^6 lbm/hr) using a reduction of core flow at a fixed design rate. Again, LPRM detectors are mathematically removed from the APRM channels. This process is continued until the minimum numbers and locations of detectors needed to provide protective action are determined for this condition.

The results of the two analyses are analyzed and compared to establish the actual minimum number and location of LPRMs needed for each APRM channel (Reference 7.6-1).

The OPRM trip function monitors LPRMs combined into “cells” of 4 LPRMs each. If more than 2 of the 4 LPRMs in an OPRM cell are bypassed, the cell is determined to be inoperable and removed from the logic. The minimum required number of operable OPRM cells per APRM

channel is determined by performing an analysis that mathematically removes LPRMs (and OPRM cells when the number of remaining LPRMs in a cell falls below the required minimum) and calculates the “hot-bundle” MCPR change that will result prior to an OPRM trip due to a power oscillation. That calculated value is compared to the hot-bundle MCPR change calculated with no LPRMs bypassed. The minimum required number of operable OPRM cells is that number that assures that the hot-bundle MCPR change that results prior to an OPRM trip is equal to or less than the corresponding value calculated with no LPRMs bypassed (References 7.6-3 through 7.6-6).

7.2.2.1.1.1.7 Design Basis 7.1.2a.1.1.1.1(7a through 7h)

Sensors, channels, and logics of the reactor protection system are not used directly for automatic control of process systems. Therefore, failure in the controls and instrumentation of process systems cannot induce failure of any portion of the protection system.

Failure of either reactor protection system power supply would result in the de-energization of one of the two scram valve pilot solenoids on each scram valve. Alternate power is available to the reactor protection system buses. A complete, sustained loss of electrical power to both power supplies would result in a scram if the loss exceeds the ride-through capability of the power supplies.

The RPS is designed so that it is only necessary for trip variables to exceed their trip setpoints for sufficient length of time to de-energize the scram relays and open the seal-in contacts of the associated trip logic. Once this is accomplished, the scram will go to completion, regardless of the state of the variable which initiated the protective action.

When initiating condition has cleared and a sufficient (10 second) time delay has occurred, the scram may be reset only by actuation of the scram reset switches in the main control room by the operator.

Reactor protection cabling is routed in separate totally enclosed metallic raceways for each division for all wiring for sensors, racks, panels, and scram solenoids. Physical separation and electrical isolation among redundant portions of the reactor protection system is provided by separated process instrumentation, separated racks, and either separated or protected panels and cabling. Separate panels are provided for each division, except for the main control room benchboard which has internal metal barriers. Where equipment from more than one division is in a panel, divisional separation is provided by fire barriers and through the use of separated terminal boards. Where wiring from more than one division is present at a single component, divisional separation is provided by fire barriers on the component in addition to routing of the wiring from the component in separate conduits.

Separate racks are provided for the reactor protection sensor instrumentation for each division and are installed in different locations.

7.2.2.1.1.1.8 Design Basis 7.1.2a.1.1.1.1(8)

Access to trip settings, component calibration controls, test points, and other terminal points is under the control of plant operations supervisory personnel.

Access control is provided by use of administration control procedures which require: (1) that panels and cabinets outside the main control room be secured in a manner such as wire locking; (2) that approved procedures be used to perform calibration and testing, which require obtaining permission prior to performance; (3) that locked open or closed valves be used to prevent manual bypass of mechanical systems, and (4) that operations personnel within the main control room monitor and control access to panels and cabinets within the main control room.

Manual bypass of instrumentation and control equipment components is under the control of the main control room operator. If the ability to trip some essential part of the system is bypassed, this fact is continuously annunciated in the main control room.

For the subsystem operational bypasses discussed in Subsection 7.2.1, bypassing of these subsystem components provides a continuous annunciation in the control room. Trip channel components are taken out-of-service for calibration or testing in accordance with Technical Specification Surveillance requirements, or are bypassed and placed in an Inoperable status, with the plant continuing to operate in accordance with the applicable Technical Specification Limiting Condition for Operation. In each case the amount of time each condition is allowed to exist and the number and function of coincident channels out of service are controlled by the Technical Specifications.

7.2.2.1.1.1.9 Other Design Basis Requirements

The Reactor Protection System is a one-out-of-two taken twice system. The dual trip system is advantageous because it can be tested thoroughly during reactor operation without causing a scram. This capability for a thorough testing program significantly increases reliability.

The environment in which the instruments and equipment of the reactor protection system must operate is given in Section 3.11. The specifications for the instruments located in the containment or turbine building are based on the worst expected ambient conditions.

The reactor protection system components that must function in the environment resulting from a RCPB break inside the drywell are the condensing chambers which supply reactor water level for the RPS level indicating switches and the inboard main steamline isolation valve position switches. Special precautions are taken to ensure their operability after the accident. The condensing chambers and all essential components of the control and electrical equipment are either similar to those that have successfully undergone qualification testing in connection with other projects, or additional qualification testing under simulated environmental conditions has been conducted.

To ensure that the reactor protection system remains functional, the number of operable channels for the essential monitored variables is maintained at or above the minimums described in the Technical Specifications. The minimums apply to any untripped trip system; a tripped trip system may have any number of inoperative channels. Because reactor protection requirements vary with the mode in which the reactor operates, there are functional requirements for the RUN and STARTUP modes. These are the only modes where more than one control rod can be withdrawn from the fully inserted position.

In case of a LOCA, reactor shutdown occurs immediately following the accident as process variables exceed their trip setpoints. Operator verification that shutdown has occurred may be made by observing one or more of the following indications:

a) Control rod status lamps indicating each rod fully inserted

b) Control rod scram pilot valve status lamps indicating open valves

c) Neutron monitoring channels and recorders indicating decreasing neutron flux

d) Annunciators for RPS variables and trip logic in the tripped state

e) NSSS process computer logging of trips and control rod position log

Following generator load rejection, a number of events occur in the following chronological order:

a) The hydraulic pressure in the EHC lines to the control valve fast closure solenoids drops and the pressure sensors provide a trip signal to the RPS. Simultaneously the turbine control logic initiates fast opening of the turbine bypass valve which minimizes the pressure from the transient.

b) The reactor protection system will scram the reactor concurrently upon receipt of the turbine control valve fast closure signal.

   The reactor scram will be averted if at the time of load rejection the unit load is equal to or less than a given value. This load value is 26% of rated power output.

c) The trip setting of the APRM channels will be automatically reduced as recirculation flow decreases.

The trip settings discussed in Subsection 7.2.1 are not changed to accommodate abnormal operating conditions. Actions required during abnormal conditions are discussed in Chapter 16.0. Transients requiring activation of the reactor protection system are discussed in Chapter 15.0. The discussions there designate which systems and instrumentation are required to mitigate the consequences of these transients.

7.2.2.1.2 Conformance to Specific Regulatory Requirements

7.2.2.1.2.1 Conformance to NRC Regulatory Guides

7.2.2.1.2.1.1 Regulatory Guide 1.11 (1971)

Regulatory Guide 1.11 is not part of the RPS design basis, however, the degree of conformance is discussed in Section 3.13.

7.2.2.1.2.1.2 Regulatory Guide 1.22 (2/72)

The system is designed so that it may be tested during plant operation from sensor device to final actuator device. The test must be performed in overlapping portions so that an actual reactor scram will not occur as a result of the testing.

7.2.2.1.2.1.3 Regulatory Guide 1.29 (1972)

All electrical and mechanical devices and circuitry between process instrumentation and protective actuators and monitoring of systems important to safety are classified as Seismic Category I.

7.2.2.1.2.1.4 Regulatory Guide 1.30 (1972)

Refer to Section 3.13.

7.2.2.1.2.1.5 Regulatory Guide 1.47 (5/73)

Regulatory Position C.1, C.2 and C.3:

Automatic indication is provided in the main control room to inform the operator that a system is inoperable. Annunciation is provided to indicate a system or part of a system is not operable. For example, the reactor protection (trip) system, and the containment and reactor vessel isolation system have annunciators lighting and sounding whenever one or more channels of an input variable are bypassed. Bypassing is not allowed in the trip logic or actuator logic. An example of automatic indication of RPS inoperability follows.

Instruments which form part of a one-out-of-two twice logic system can be removed from service for calibration. Removal of the instrument from service will be indicated in the main control room as a single instrument channel trip.

Regulatory Position C.4:

Capability for manual initiation of the RPS system level bypass and inoperability indication is provided by activation of a control switch located in the main control room. This may be used to provide administrative control of the bypass indication for those bypasses or inoperabilities which cannot be automatically indicated. A control switch is provided for each system level bypass indicator.

The following discussion expands the explanation of conformance to Regulatory Guide 1.47 to reflect the importance of providing accurate information for the operator and reducing the possibility for the indicating equipment to adversely affect its monitored safety system.

a) Individual indicators are arranged together on the Reactor Core Cooling Benchboard to indicate what function of the system is out of service, bypassed or otherwise inoperable. All bypass and inoperability indicators both at a system level and component level will be grouped only with items that will prevent a system for operating if needed.

b) As a result of design, preoperational testing, and startup testing, no erroneous bypass indication is anticipated.

c) These indication provisions serve to supplement administrative controls and aids the operator in assessing the availability of component and system level protective actions. This indication does not perform a safety function.

d) All circuits are electrically independent of the plant safety systems to prevent the possibility of adverse effects.
e) Each indicator which can be periodically tested is provided with dual lamps.

7.2.2.1.2.1.6 Regulatory Guide 1.53 (6/73)

Compliance with NRC Regulatory Guide 1.53 is achieved by specifying, designing, and constructing the engineered safeguards systems to meet the single failure criterion, Section 4.2 of IEEE 279-1971 and IEEE 379-1972. Redundant sensors are used and the logic is arranged to ensure that a failure in a sensing element or the decision logic or an actuator will neither prevent nor initiate protective action. Separated channels are employed so that a fault affecting one channel will not prevent the other channels from operating properly. Specifications are provided to define channel separation for wiring not included with NSSS supplied equipment.

The RPS is normally energized with 2 motor generator sets for power, one for each separate trip system. Therefore, a single failure will produce a trip on one channel, and complete loss of power will trip the reactor.

Facilities for testing are provided so that the equipment can be operated in various test modes to confirm that it will operate properly when called upon. Testing incorporates all elements of the system under one test mode or another, including sensors, logic, actuators, and actuated equipment. The testing is planned to be performed at intervals so that there is an extremely low probability of failure in the periods between tests. During testing there are always enough channels and systems available for operation to provide proper protection.

7.2.2.1.2.1.7 Regulatory Guide 1.62 (10/73)

Means are provided for manual initiation of reactor manual scram at the system level through the use of four armed pushbutton switches.

Operation of these switches accomplishes the initiation of all actions performed by the automatic initiation circuitry.
These switches are located on the Unit Operating Benchboard.

The amount of equipment common to initiation of both manual scram and automatic scram is kept to a minimum through implementation of manual scram at the final devices (scram relay) of the protection system. No single failure in the manual, automatic, or common portions of the protection system will prevent initiation of reactor scram by manual or automatic means.

The "minimum of equipment" objective is accomplished for the initiation of manual scram through its implementation at the final devices (scram relay) of the protection system.

Manual initiation of reactor scram, once initiated, goes to completion as required by IEEE 279-1971, paragraph 4.16.

7.2.2.1.2.1.8 Regulatory Guide 1.63 (10/73)

Refer to Section 3.13. Design is in compliance.

7.2.2.1.2.1.9 Regulatory Guide 1.68 (11/73)

Written procedures and responsibilities are developed for the preoperational and startup testing of the system. Response times of protection channels including sensors, as defined in Tables 7.3-28, 7.3-29, 7.3-30; proper operation in all combinations of logic, calibration, and operability of primary sensors, except for neutron monitoring system and process radiation sensors; proper trip and alarm settings; proper operation of permissive, prohibit, and bypass functions; and operability of bypass switches are verified. Redundancy, electrical independence, coincidence, and safe failure on loss of power and operability of backup scram solenoid valves and devices including detectors, logic, trip points, and final control elements are demonstrated.

7.2.2.1.2.1.10 Regulatory Guide.1.75 (1/75)

The Reactor Protection System complies with the criteria set forth in IEEE 279-1971, paragraph 4.6.

Physical and electrical independence of the instrumentation devices of the system is provided by channel independence for sensors exposed to each process variable. Separate and independent conduits are routed from each device to the respective control room panel. Each channel has a separate and independent section of a control room panel which is separated by a barrier from the other channel. Trip logic outputs are separate in the same manner as the channels.

7.2.2.1.2.1.11 Regulatory Guide 1.89 (11/74)

Regulatory Guide 1.89 is not part of the RPS design basis, RPS performs its safety related function in a mild environment. Therefore the environmental qualification Provisions of 10CFR50.49 Section C, item (3) are applicable.

7.2.2.1.2.2 Conformance to 10CFR50, Appendix A – General Design Criteria

7.2.2.1.2.2.1 General Design Criterion 1

The quality assurance program for the system assures sound engineering in all phases of design and construction through conformity to regulatory requirements and design bases described in the license application.

Documents are maintained which demonstrate that all the requirements of the quality assurance program are being satisfied. These records will be maintained during the life of the operating licenses.

7.2.2.1.2.2.2 General Design Criterion 2

Refer to Section 3.1 for details of conformance.

7.2.2.1.2.2.3 General Design Criterion 3

Refer to Subsection 9.5.1 for details of conformance.

7.2.2.1.2.2.4 General Design Criterion 4

The system is designed to accommodate the effects of and to be compatible with the environmental conditions associated with normal operation, maintenance, testing, and postulated accidents, including loss-of-coolant accidents.

The system is appropriately protected against dynamic effects including the effects of missiles, pipe whipping and discharging fluids that may result from equipment failures.

Refer to Sections 3.5 and 3.6 for details of compliance.

7.2.2.1.2.2.5 General Design Criterion 5

Refer to Section 3.1 for discussion.

7.2.2.1.2.2.6 General Design Criterion 10

The RPS is designed to monitor certain reactor parameters, sense abnormalities, and to scram the reactor thereby preventing fuel design limits from - being exceeded when trip points are exceeded. Scram trip setpoints are selected based on operating experience and by the safety design basis. There is no case in which the scram trip setpoints allow the core to exceed the thermal hydraulic safety limits. Power for the reactor protection system is supplied by two independent ride-through AC power supplies. An alternate power source is available for each bus.

The system is designed to assure that the specified fuel design limits are not exceeded during conditions of normal or abnormal operation.

7.2.2.1.2.2.7 General Design Criterion 12

The system design provides protection from excessive fuel cladding temperatures and protects the RCPB from excessive pressures which threaten the integrity of the system. Local abnormalities are sensed and, if protection system limits are reached, corrective action is initiated through an automatic scram. High integrity of the protection system is achieved through the combination of logic arrangement, trip channel redundance, power supply redundancy, and physical separation.

7.2.2.1.2.2.8 General Design Criterion 13

Each system input is monitored and annunciated.

7.2.2.1.2.2.9 General Design Criterion 15

The system acts to provide sufficient margin to assure that the design conditions of the RCPB are not exceeded during any condition of normal operation, including anticipated operational occurrences. If the monitored variables exceed their predetermined settings, the system automatically responds to maintain the variables and systems within allowable design limits.

7.2.2.1.2.2.10 General Design Criterion 19

Controls and instrumentation are provided in the main control room. The reactor can also be shutdown in an orderly manner from outside the main control room at the remote shutdown panel.

7.2.2.1.2.2.11 General Design Criterion 20

The system constantly monitors the appropriate plant variables to maintain the fuel barrier and RCPB and initiates a scram automatically when the variables exceed the established setpoints.

7.2.2.1.2.2.12 General Design Criterion 21

The system is designed with four independent and separated input channels and four independent and separated output channels. No single failure or operator action can prevent a scram. The system can be tested during plant operation to assure its availability.

7.2.2.1.2.2.13 General Design Criterion 22

The redundant portions of the system are separated such that no single failure or credible natural disaster can prevent a scram. Functional diversity is employed by measuring flux, pressure, and level in the reactor vessel, which are dependent variables and are diverse.

7.2.2.1.2.2.14 General Design Criterion 23

The system is fail safe. A loss of electrical power or air supply will not prevent a scram. Postulated adverse environments will not prevent a scram.

7.2.2.1.2.2.15 General Design Criterion 24

The system has no control function. It is interlocked to control systems through isolation devices.

7.2.2.1.2.2.16 General Design Criterion 25

The system provides protection against the onset and consequences of conditions that threaten the integrity of the fuel barrier and the RCPB. Any monitored variable which exceeds the scram setpoint will initiate an automatic scram and not impair the remaining variables from being monitored, and if one channel fails the remaining portions of the reactor protection system will function.

7.2.2.1.2.2.17 General Design Criterion 29

The system is highly reliable so that it will scram in the event of anticipated operational occurrences.

7.2.2.1.2.3 Conformance with Industry Codes and Standards

7.2.2.1.2.3.1 IEEE 279 (1971)

7.2.2.1.2.3.1.1 General Functional Requirement (IEEE 279-1971, Paragraph 4.1)

The following RPS trip variables provide automatic initiation of protective action in compliance with this requirement:

a) Scram discharge volume high water level trip

b) Main steamline isolation valve closure trip

c) Turbine stop valve closure trip

d) Turbine control valve fast closure trip

e) Reactor vessel low water level trip

f) Neutron monitoring (APRM) system trip

g) Neutron Monitoring (IRM) system trip

h) Drywell high pressure trip

i) Reactor vessel high pressure trip

j) Neutron monitoring (OPRM) system trip

The reactor system mode switch selects appropriate operating bypasses for various RPS variables in the Shutdown, Refuel, Startup, and Run modes of operation. Other manual controls, such as the manual scram pushbutton switches and the RPS reset switch, are arranged so as to assure that the process variables providing automatic initiation of protective action will continue to remain in compliance with this requirement.

The RPS reset switch is under the administrative control of the reactor operator. Since the reset switch, through auxiliary relay contacts, is introduced in parallel with the trip actuator seal-in contact, failure of the reset switch cannot prevent initiation of protective action when a sufficient

number of trip channels assume the tripped condition. Hence, the automatic initiation requirement for protective action is not invalidated by this reset switch.

The RPS logic, trip actuator logic, and trip actuators are designed to comply with this requirement through automatic removal of electric power to the control rod drive scram solenoids when one or more RPS variables exceeds the specified trip setpoint.

Manual reset by the operator bypasses the seal-in contact to permit the RPS to be reset to its normally energized state when all process sensor trip channels are within their normal (untripped) range of operation.

This requirement applies to the Period Based Detection algorithm and trip portion of the OPRM. As no credit is taken for the Amplitude and Growth Rate trip algorithms, this requirement does not apply to those two functions.

7.2.2.1.2.3.1.2 Single Failure Criterion (IEEE 279-1971, Paragraph 4.2)

The following RPS trip variables are individually implemented with four redundant and physically separated channels in compliance with this requirement:

a) Main steamline isolation valve closure trip

b) Turbine stop valve closure trip

c) Turbine control valve fast closure trip

The following RPS trip variables are individually implemented with four redundant channels divided into two physically separated groups in compliance with this requirement:

d) Scram discharge volume high water level trip

e) Reactor vessel low water level trip

f) Drywell high pressure trip

g) Reactor vessel high pressure trip

The neutron monitoring system APRM/OPRM, and IRM trips comply with the single failure criterion through the use of physical-panel barriers and electrical isolation provisions to provide independence among the two redundant APRM/OPRM 2-out-of-four voter channels and four redundant IRM channels in either Trip System A or B. Four redundant APRM/OPRM channels provide inputs to both Trip System A and Trip System B.

Wiring from each sensor to the relay cabinets is run in a separate totally enclosed metallic raceway to maintain electrical isolation and physical separation among redundant sensor trip channels.

A separate trip channel relay is provided for each sensor. These relays are installed in four redundant cabinets to maintain independence of the redundant trip channels.

RPS manual controls also comply with the single failure criterion. Four manual scram pushbuttons are arranged into two groups on one main control room panel, and the switch contact blocks are enclosed within metal barriers.

The mode switch consists of a single manual actuator connected to four distinct switch banks. Each bank is housed within a fire retardant cover. Contacts from each bank are wired in conduit to individual metallic terminal boxes.

Since the scram discharge volume high water level trip operating bypass requires manual operation of a bypass switch and the mode switch to establish four bypass channels, the design of the bypass function complies with this design requirement. For the bypass switch, a single operator connects to four physically and electrically separated blocks of switch contacts within the switch body. Wiring from the contacts is routed in conduit to separate metallic terminal boxes. One set of switch contacts in conjunction with mode switch contacts is used to energize each trip channel bypass relay when the bypass condition is desired. There is no single failure of this bypass function that will satisfy the condition necessary to establish the bypass condition. Hence, this function complies with the single-failure criterion.

The main steamline isolation valve closure trip operating bypass is implemented with redundant mode switch contacts in a similar manner.

The turbine stop valve closure trip and control valve fast closure trip operating bypass complies with the single-failure criterion. Two pressure sensors are mounted at each of two turbine first stage pressure taps. Contacts from the pressure sensors are routed in a totally enclosed metallic raceway to the RPS cabinets in the control structure. A single bypass is associated with a single trip channel for stop valve closure and for control valve fast closure. The worst-case single failure could result in the bypass of the turbine stop valve closure and turbine control valve fast closure for the A and B trip logics or the C and D trip logics. The logic is arranged so that this failure does not interfere with the normal protective action of the RPS.

The RPS reset switch and associated logic comply with this design requirement. The reset switch is constructed with a single, operator and two physically and electrically separated contact blocks. The wires from the contact blocks go through totally enclosed metallic raceways to metallic terminal boxes.

Since opening of the process sensor trip channel is the initiating event for reactor scram, failure of the reset switch will not prevent de-energization of the trip actuators during the time interval that the process actually exceeds the trip setpoint.

Those portions of the RPS downstream of the trip channels also comply with this design requirement. Any postulated single failure of a given trip logic will not affect the remaining three trip logics. Similarly, any single failure of a trip actuator will not affect the remaining trip actuators, and any single failure of one trip actuator logic will not affect the other trip actuator logic networks. The cabling associated with one trip logic is routed in a totally enclosed metallic raceway that is physically separated from similar cabling associated with the other trip logics. Cabling from the trip actuator logic to the scram solenoid groups is routed in individual totally enclosed metallic raceways to comply with this design requirement. Because both the "A" and "B" solenoid coils must de-energize to scram, wiring of these two solenoids for one control rod are routed together within a single totally enclosed metallic raceways.

7.2.2.1.2.3.1.3 Quality of Components and Modules (IEEE 279-1971, Paragraph 4.3)

The RPS trip variables which are listed in Subsection 7.2.2.1.2.3.1.11 are implemented with components and modules used on previous BWR plants and which exhibit high quality and high reliability characteristics.

The RPS manual switches are also selected to be of high quality and reliability.

The four pressure sensors selected for the turbine stop valve closure trip and control valve fast closure trip operating bypass are of high quality and reliability.

The RPS trip logic consists of series-connected relay contacts from the trip channel output relays. The relay is of high quality and reliability.

The RPS trip actuator logic consists of relay contacts connected in a specific arrangement from the trip actuators. The trip actuators are of high quality and reliability.

7.2.2.1.2.3.1.4 Equipment Qualification (IEEE 279-1971, Paragraph 4.4)

Vendor certification is required for the sensor associated with each of the RPS trip variables which are listed in Subsection 7.2.2.1.2.3.1.1, manual switches, and trip logic components performs in accordance with the requirements listed on the purchase specification as well as in the intended application. This certification, in conjunction with the existing field experience with these components in this application, will serve to qualify these components.

NSSS supplier has conducted qualification tests of the relay panels to confirm their adequacy for this service. In situ operational testing of these sensors, channels, and the entire protection system will be performed at each project site during the preoperational test phase.

7.2.2.1.2.3.1.5 Channel Integrity (IEEE 279-1971, Paragraph 4.5)

The manual switches and components of the RPS trip variables which are listed in Subsection 7.2.2.1.2.3.1.1, are specified to operate under normal and abnormal conditions of environment, energy supply, malfunctions, and accidents.

The RPS trip logic, trip actuators, and trip actuator logic are designed to be operable under normal and abnormal conditions of environment, energy supply, malfunctions and accidents.

7.2.2.1.2.3.1.6 Channel Independence (IEEE 279-1971, Paragraph 4.6)

The four redundant trip channels for the following RPS trip variables are physically separated and electrically isolated from one another to meet this design requirement:

a) Scram discharge volume high water level trip

b) Turbine stop valve closure trip

c) Turbine control valve fast closure trip

d) Reactor vessel low water level trip

e) Drywell high pressure trip

f) Reactor vessel high pressure trip

The individual switch boxes for the turbine variables are physically separated.

The main steamline isolation valve closure trip is derived from 8 individual channels which are physically separated and electrically isolated to meet this design requirement.

The eight IRM, four APRM/OPRM, and four APRM/OPRM 2-out-of 4 voter channels are electrically isolated and physically separated from one another so as to comply with this design requirement.

The manual scram pushbutton is a channel component. The trip channels are physically separated and electrically isolated to comply with this design requirement.

The mode switch banks are physically separated and electrically isolated to comply with this design requirement.

The circuitry for the RPS trip variable operating bypasses complies with this design requirement. Sufficient physical separation and electrical isolation exists to assure that the operating bypass channels are satisfactorily independent. Moreover, the conditions for bypass have been made quite stringent in order to provide additional margin.

The four RPS reset channels to the trip actuators are physically separated and electrically isolated. The RPS trip logic, trip actuators, and trip actuator logic are also physically separated and electrically isolated.

7.2.2.1.2.3.1.7 Control and Protection System Interaction (IEEE 279-1971, Paragraph 4.7)

The redundant channels for the RPS trip variables which are listed in Subsection 7.2.2.1.2.3.1.1 are electrically isolated from the plant control systems in compliance with this design requirement.

Each trip channel output delay uses one contact within the RPS trip logic. One additional contact on each relay is wired to a common annunciator in the main control room, and another contact on each relay is wired to the process computer cabinets to provide a written log of the channel trips. There is no single failure that will prevent proper functioning of any protective function when it is required.

The main steamline isolation valve and turbine stop valve limit switch contacts for RPS use are routed through separate totally enclosed metallic raceways connections relative to the other limit switches used for indicator lights in the control room. After the cabling emerges from the limit switch junction box associated with each main steamline isolation valve or turbine stop valve, it is routed separately from any other cabling in the plant to the RPS panels in the control room.

Turbine control valve fast closure pressure sensor outputs for RPS use are routed separately relative to other outputs used for indicator lights and turbine control purposes. After the cabling emerges from the junction boxes, it is routed in totally enclosed metallic raceways to the logic cabinets in the control room.

Within the APRM equipment (i.e., before their output trip driving the RPS), analog outputs are

derived for use with control room meters and recorders. Electrical isolation is incorporated into the design at this interface to prevent any single failure from influencing the protective trip output. The trip outputs are physically separated and electrically isolated from other plant equipment in their routing to the RPS panel.

Each OPRM module is electrically isolated by fiber-optic data link from its companion OPRM in the same RPS channel, and electrically and physically isolated from other OPRM channels.

The manual scram pushbutton has no control interaction.

The reactor system mode switch is used for protective functions and restrictive interlocks on control rod withdrawal and refueling equipment movement. Additional contacts of the mode switch are used to disable certain computer inputs when the alarms would represent incorrect information for the operator. No control functions are associated with the mode switch. Hence, the switch complies with this design requirement. The system interlocks to control systems only through isolation devices such that no failure or combination of failures in the control system will have any effect on the reactor protection system.

The RPS scram discharge volume high water level trip variable operating bypass circuitry complies with this design requirement. For each trip channel bypass relay, four contacts are used in the bypass logic. One contact of each relay is also wired to a common annunciator in the control room and one contact is wired to the control rod block circuitry to prevent rod withdrawal whenever the trip channel bypass is in effect. There are no control system interactions with these bypass relay outputs. The system interlocks to control systems only through isolation devices such that no failure or combination of failures in the control system will have any effect on the RPS.

The main steamline isolation valve closure trip bypass has no interaction with any control system in the plant. One contact of each relay is used to initiate a control room annunciator for this bypass function.

Turbine stop valve and control valve trip bypasses have no interaction with any control system in the plant. Two output relay contacts in series are used in the RPS trip logic and one additional contact from each relay is used to initiate a control room annunciator for this bypass function.

Switch contacts of the RPS reset switch are used only to control auxiliary relays. Contacts from the relays are used only in the trip actuator coil circuit. Consequently, this RPS function has no interaction with any other system in the plant.

Reactor vessel high pressure switch contacts are routed in totally enclosed metallic raceways from the sensor to the RPS panels in the control room.

The four RPS trip logics are totally separate from all other plant systems. The RPS trip actuators utilize the power contacts of the scram relays to provide the trip actuator logic and the seal-in contact of the trip actuator, and utilize auxiliary contacts for control room annunciation, the process computer inputs, and initiation of the backup scram valves. Due to the design of this output and separation of the cabling, there is no interaction with control systems of the plant. The scram solenoids are physically separate and electrically isolated from the other portions of the control rod drive hydraulic control unit.

Reactor vessel low water level switch contacts for RPS use are routed through separate totally enclosed metallic raceways runs relative to the remaining switch contacts in these sensors.

7.2.2.1.2.3.1.8 Derivation of System Inputs (IEEE 279-1971, Paragraph 4.8)

The RPS trip variables are direct measures of:

a) Reactor vessel low water level trip

b) Neutron Monitoring (APRM) system trip

c) Neutron monitoring (IRM) system trip

d) Drywell high pressure trip

e) Reactor vessel high pressure trip

f) Neutron monitoring (OPRM) system trip

The measurement of scram discharge volume water level is an appropriate variable for this protective function. The desired variable is "available volume" to accommodate a reactor scram. However, the measurement of consumed volume is sufficient to infer the amount of remaining available volume, since the total volume is a fixed, predetermined value established by the design.

The measurement of main steamline isolation valve and turbine stop valve position is an appropriate variable for the reactor protection system. The desired variable is "loss of the reactor heat sink"; however, isolation or stop valve closure is the logical variable to infer that the steam path has been blocked between the reactor and the heat sink.

Due to the normal throttling action of the turbine control valves with changes in the plant power level, measurement of control valve position is not an appropriate variable from which to infer the desired variable, "rapid loss of the reactor heat sink." Consequently, a measurement of control valve closure rate is required.

Protection system design practice has discouraged use of rate sensing devices for protective purposes. In this instance, it was determined that detection of hydraulic actuator operation would be a more positive means of determining fast closure of the control valves.

Loss of hydraulic pressure in the EHC oil lines which initiates fast closure of the control valves is monitored. These measurements provide indication that fast closure of the control valves is imminent.

This measurement is felt to be adequate and a proper variable for the protective function taking into consideration the reliability of the chosen sensors relative to other available sensors and the difficulty in making direct measurements of control-valve fast-closure rate.

Since the mode switch is used to connect appropriate sensors into the RPS logic depending upon the operating state of the reactor, the selection of particular contacts to perform this logic operation is an appropriate means for obtaining the desired function.

Since the intent of the turbine stop valve closure trip and control valve fast closure trip operating bypass is to permit continued reactor operation at low power levels when the turbine stop or control valves are closed, the selection of turbine first stage pressure is an appropriate variable for this bypass function. In the power range of reactor operation, turbine first stage pressure is essentially linear with increasing reactor power. Consequently, this variable provides the desired measurement of power level.

Due to the manual action required for scram discharge volume high water level trip bypass, this design requirement is satisfied by operator interaction with a single bypass switch and the mode switch.

7.2.2.1.2.3.1.9 Capability for Sensor Checks (IEEE 279-1971, Paragraph 4.9)

During reactor operation, one sensor for each of the following RPS trip variables may be valved out-of-service at a time to perform testing under administrative control. During this test, operation of the sensor and the RPS trip channel may be confirmed. At the conclusion of the test, administrative control must be used to ensure that the sensor has been properly returned to service:

a) Scram discharge volume high water level trip

b) Reactor vessel low water level trip

c) Drywell high pressure trip

d) Reactor vessel high pressure trip

The scram discharge volume level sensors may be tested by using the locked instrument valves in proper sequence in conjunction with quantities of demineralized water. The test procedure is similar to the calibration procedure for this variable.

The main steamline isolation valve position switches are tested during valve movements which cause the limit switches to operate at the setpoint value of the valve position.

The logic of four MSIV instrument channel logics is as follows:

A1 (tripped) = Inboard or outboard valve partially closed in MS-A, and inboard or outboard valve partially closed in MS-B

A2 (tripped) = Inboard or outboard valve partially closed in MS-C, and inboard or outboard valve partially closed in MS-D

B1 (tripped) = Inboard or outboard valve partially closed in MS-A, and inboard or outboard valve partially closed in MS-C

B2 (tripped) = Inboard or outboard valve partially closed in MS-B, and inboard or outboard valve partially closed in MS-D

For any single valve closure test, two of the eight instrument channels will be placed in a tripped condition, but none of the channel logics will be tripped, and no RPS annunciation or computer

logging will occur. This arrangement permits single valve testing without corresponding tripping of the RPS. The observation that no RPS trips result is a valid and necessary test result.

At reduced power levels, two valves may be tested in sequence to produce RPS trips, annunciation of the trips, and computer printout of the trip channel identification. For example, closure of one valve in Main Steamline A and another valve in Main Steamline B will produce an A1 Trip Logic trip and should not produce trips in B1 or B2 channel logic circuits. These observations are another important test result that confirms proper RPS operation.

In sequence, each possible combination of single valve closure and switch operation is performed to confirm proper operation of all eight instrument channels.

These test results confirm that the valve limit switches operate as the valves are manually closed. The turbine stop valve position switches are also tested during valve movements which cause the limit switches to operate at the setpoint value.

The logic of the four turbine stop valve instrument channel logics is as follows:

A1 (tripped) = Turbine Stop Valve 1 partially closed, and Turbine Stop Valve 2 partially closed

A2 (tripped) = Turbine Stop Valve 3 partially closed, and Turbine Stop Valve 4 partially closed

B1 (tripped) = Turbine Stop Valve 1 partially closed, and Turbine Stop Valve 3 partially closed

B2 (tripped) = Turbine Stop Valve 2 partially closed, and Turbine Stop Valve 4 partially closed
For any single stop valve closure test, two of the eight instrument channels will be placed in a tripped condition, but none of the channel logics will be tripped, and no RPS annunciation or computer logging will occur. This arrangement permits single valve testing without corresponding tripping of the RPS, and the observation that no RPS trips result is a valid and necessary test result.

Although per design, the Turbine Stop Valve logic will allow for testing of TSVs in pairs, it is not desirable to test in this manner since it will lead to an EOC-RPT. Therefore, this feature is not used and stop valves are only tested individually.

The turbine control valve fast closure oil pressure sensors may be tested during the routine turbine system tests. During any control-valve fast-closure test, one RPS instrument channel will be tripped and will produce both control room annunciation and computer logging of the instrument channel identification.

The four RPS instrument logics are arranged as follows:

A1 (tripped) = Pressure Switch A loss of oil pressure

A2 (tripped) = Pressure Switch C loss of oil pressure

B1 (tripped) = Pressure Switch B loss of oil pressure

B2 (tripped) = Pressure Switch D loss of oil pressure

During plant operation, the individual pressure switches may be valved out-of-service, and the turbine control system may be used to operate the turbine bypass valves so as to perform a periodic test of the RPS inputs and channel logic.

During reactor operation in the "Run" mode, the IRM detectors are stored below the reactor core in a low flux region. Movement of the detectors into the core will permit the operator to observe the instrument response from the different IRM channels and will confirm that the instrumentation is operable.

In the power range of operation, the individual LPRM detectors will respond to local neutron flux and provide the operator with an indication that these instrument channels are responding properly. The APRM channels may also be observed to respond to changes in the gross power level of the reactor to confirm their operation.

Each APRM instrument channel may also be calibrated with a simulated signal introduced into the amplifier input and each IRM instrument channel may be calibrated by introducing an external signal source into the amplifier input. The OPRM is an integral part of the APRM and is calibrated with the APRM.

During these tests, proper instrument response may be confirmed by observation of instrument lights in the control room and trip annunciators. Unnecessary actuation of the RPS trip logic can be prevented by use of an indicating jumper across the RPS Trip Channel logic input from the instrument channel under test. The jumper provides positive indication of channel operation when the bypassed instrument is actuated during the performance of maintenance, test, or calibration, and maintains the monitoring and trip function of the remaining portions of the RPS trip logic while this channel is removed from service.

7.2.2.1.2.3.1.10 Capability for Test and Calibration (IEEE 279-1971, Paragraph 4.10)

The following RPS trip variables have provisions for sensor test and calibration during reactor operation in compliance with this design requirement:

a) Reactor vessel low water level trip

b) Neutron monitoring (APRM) system trip

c) Neutron monitoring (IRM) system trip

d) Drywell high pressure trip

e) Reactor vessel high pressure trip

f) Neutron monitoring (OPRM) system trip

The reactor water level indicating switches can be calibrated during normal plant operation or during shutdown. The switches are valved out of service and a test source, using operational process fluid (demineralized water in this case) applies a differential pressure across the switches. Pressures are analogous to those corresponding to reactor water levels over the instruments range. The same procedure is used for both setpoint and indication calibration.

A test of the scram discharge volume water level sensors and trip units can be performed during full power operation. At plant shutdown, the level switches may be calibrated by introducing a fixed volume of water into the discharge volume and observing that all level switches and trip units operate at the specified levels.

During plant operation, the operator can confirm that the main steamline isolation and turbine stop valve limit switches operate during valve motion, from full open to full closed and vice versa, by comparing the time that the RPS trip occurs with the time that the valve position indicator lights in the control room signaling that the valve is fully open and fully closed. This test does not confirm the exact setpoint, but does provide the operator with an indication that the limit switch operates between the limiting positions of the valve. During reactor shutdown, calibration of the main steam line isolation and turbine stop valve limit switch setpoint at a valve position of 10% closure is possible by physical observation of the valve stem.

During reactor operation, a test of the individual EHC oil line pressure sensors when the plant is operating above 26% of rated power may be accomplished by valving one sensor out-of-service at a time. Actual calibration of the setpoint can only be accomplished at plant shutdown.

The APRMs are calibrated to reactor power by using a reactor heat balance and the (TIP) system to establish the relative local flux profile. LPRM gain settings are determined from the local flux profiles measured by the TIP system once the total reactor heat balance has been determined.

The gain-adjustment-factors for the LPRMs are produced as a result of the process computer nuclear calculations involving the reactor heat balance and the TIP flux distributions. These adjustments when incorporated into the LPRMS, permit the nuclear calculations to be completed for the next operating interval and establish the APRM calibration relative to reactor power.

During reactor operation, one manual scram pushbutton may be depressed to test the proper operation of the switch, and once the RPS has been reset, the other switches may be depressed to test their operation one at a time. For each such operation, a control room annunciation will be initiated and the process computer will print the identification pertinent trip.

In the startup and run modes of plant operation, procedures may be used to confirm that scram discharge volume high water level trip channels are not bypassed as a result of the operating bypass switch. In the shutdown and refuel modes of plant operation, a similar procedure may be used to bypass all four trip channels. Due to the discrete "ON-OFF" nature of the bypass function, calibration is not meaningful.

Administrative control must be exercised to valve one turbine first stage pressure sensor out-of-service for the periodic test. During this test, a variable pressure source may be introduced to operate the sensor at the setpoint value. When the condition for bypass has been achieved on an individual sensor under test, the control room annunciator for this bypass function will be initiated. If the RPS trip channel associated with this sensor had been in its tripped state, the process computer will log the return to normal state for the RPS trip logic. When the plant is operating above 26% of rated power, testing of the turbine stop valve and control valve fast closure trip channels will confirm that the bypass function is not in effect.

Operation of the reset switch following a trip of one RPS trip system will confirm that the switch is performing its intended function. Operation of the reset switch following trip of both RPS trip

systems will confirm that all portions of the switch and relay logic are functioning properly since half of the control rods are returned to a normal state for one actuation of the switch.

A manual scram and test switch permits each individual trip logic, trip actuator, and trip actuator logic to be tested on a periodic basis. Testing of each process sensor of the protection system also affords an opportunity to verify proper operation of these components. Calibration of the time response of the trip channel relays and trip actuators may be accomplished by connection of external test equipment to test points provided in the RPS control room panels in addition to the process computer sequential annunciation output log.

7.2.2.1.2.3.1.11 Channel Bypass or Removal from Operation (IEEE 279-1971, Paragraph 4.11)

The following RPS trip variables have no provision for channel bypass or removal from service because of the use of valve position limit switches as the channel sensor:

a) Main steamline isolation valve closure trip

b) Turbine stop valve closure trip

During periodic test of any one main trip channel, a sensor may be valved out-of-service and returned-to-service under administrative control procedures. Since only one sensor is valved out-of-service at any given time during the test interval, protective capability for the following RPS trip variables is maintained through the remaining instrument channels:

c) Scram discharge volume high water level trip

d) Turbine control valve fast closure trip

e) Reactor vessel low water level trip

f) Drywell high pressure trip

g) Reactor vessel high pressure trip

A sufficient number of IRM channels has been provided to permit any one IRM channel in a given trip system to be manually bypassed and still ensure that the remaining operable IRM channels comply with the IEEE 279 design requirements.

One IRM manual bypass switch has been provided for each RPS trip system. The mechanical characteristics of this switch permit only one of the four IRM channels of that trip system to be bypassed at any time. In order to accommodate a single failure of this bypass switch, electrical interlocks have also been incorporated into the bypass logic to prevent bypassing of more than one IRM in that trip system at any time. Consequently, with any IRM bypassed in a given trip system, at least two and generally three IRM channels remain in operation to satisfy the protection system requirements.

One manual APRM bypass switch is provided for all four APRM channels. This is a mechanical/optical switch which allows only one APRM channel to be bypassed at any time. This interlock is accomplished independently in each of the APRM/OPRM 2-out-of-4 Voter channels. With any one APRM channel bypassed, the three remaining operating channels provide the necessary protection of the reactor. Bypassing an APRM channel bypasses both the APRM and OPRM trips from that channel. None of the APRM/OPRM 2-out-of-4 Voter

channels can be bypassed.

The use of four banks of contacts for the mode switch permits any RPS trip channel which is connected into the mode switch to be periodically tested in a manner that is independent of the mode switch itself. Consequently, for any stated position of the mode switch, a sufficient number of trip channels will remain operable during the periodic test to fulfill this design requirement. Movement of the mode switch handle from one position to another will disconnect all redundant channels associated with the former position and will connect all redundant channels pertinent to the latter position. In this manner, the mode switch complies with this design requirement.

Since actuation of one manual scram pushbutton places its RPS trip system in a tripped condition, it is in compliance with this design requirement.

7.2.2.1.2.3.1.12 Operating Bypasses (IEEE 279-1971, Paragraph 4.12)

The following RPS trip variables have no provision for an operating bypass (i.e., removal of the protective capability for all channels of the RPS trip variable):

a) Reactor vessel low water level trip

b) Neutron monitoring (APRM-) system trip

c) Drywell high pressure trip

d) Reactor vessel high pressure trip

An operating bypass of the scram discharge volume high water level trip is provided in the control room for the operator to bypass the trip outputs in the shutdown and refuel modes of operation. Control of this bypass is achieved through administrative procedures, and its only purpose is to permit reset of the RPS following reactor scram. The bypass is manually initiated and must be manually removed to commence withdrawal of control rods after a reactor shutdown.

An operating bypass is provided for the main steamline isolation valve closure trip. The bypass requires that the reactor system mode switch, which is under the administrative control of the operator, be placed in the shutdown, refuel, or startup positions. The only purpose of this bypass is to permit the RPS to be placed in its normal energized state for operation at low power levels with the main steamline isolation valves not fully open.

For each of these operating bypasses, four independent bypass channels are provided through the mode switch to assure that all of the protection system criteria are satisfied.

An operating bypass of the turbine stop valve and control valve fast closure trip is provided whenever the turbine is operating at an initial power level below 26% of rated power. The only purpose of the bypass is to permit the reactor protection system to be placed in its normal energized state for operation at low power levels with the turbine stop valves not fully open.

During normal plant operation above 26% of rated power, the bypass circuitry is in its passive, de-energized state. At these conditions, removal of the bypass for periodic test is permitted since it has no effect on plant safety. Under plant conditions below 26% of rated power, one bypass

channel may be removed from service at a time without initiating protective action or affecting plant safety. This removal from service is accomplished under administrative control of plant personnel.

When operating in the run mode, the IRM system is bypassed by the mode switch.

OPRM Trips are enabled when the plant is operated at the power and core flow boundary specified in the Technical Specification. OPRM trips are disabled when the plant is not within those boundaries.

7.2.2.1.2.3.1.13 Indication of Bypasses (IEEE 279-1971, Paragraph 4.13)

The control room operator must exercise administrative control over the valving out-of-service of one RPS trip variable sensor at a time. Once a sensor has been removed from service and a simulated test signal has been introduced in excess of the setpoint, a control room annunciator will indicate the tripped condition and the process computer will provide a typed record of the channel identification.

When any IRM or APRM instrument channel output to the RPS is bypassed, this fact is indicated by lights for each channel located on the main control room panels.

Operating bypasses are annunciated in the main control room. The discharge volume high water level trip operating bypass, the main steamline isolation valve closure trip operating bypass, and the turbine stop and control valve fast-closure trips operating bypass are individually annunciated to the operator.

Control and tracking of trip channels taken out of service is described in Section 7.2.2.1.1.1.8. Bypassing is not allowed in the trip logic or actuator logic.

7.2.2.1.2.3.1.14 Access to Means for Bypassing (IEEE 279-1971, Paragraph 4.14)

All instrumentation valves associated with the periodic testing of individual RPS trip variable sensors are under administrative control of the operator.

Manual bypassing of any IRM, OPRM or APRM channel is accomplished with control room selector switches under the administrative control of the operator.

Manual controls for the scram discharge volume high water level trip operating bypass and the main steam line isolation valve closure trip operating bypass are located in the control room, and are under the direct administrative control of the operator. Manual keylock switches are used to control these operating bypasses.

The mode switch is a keylock switch under the administrative control of plant personnel. Since other controls must be operated or other sensors must be in an appropriate state to complete the operating bypass logic, the mode switch itself satisfies this requirement.

Under normal operating conditions, all four channels of the turbine stop valve closure trip and control valve fast closure trip operating bypass are in operation and will be automatically removed from service as reactor power is increased above the 26% setpoint and automatically reinstated as

reactor power is reduced below this same setpoint. During periodic tests of each bypass channel, one sensor will be removed from service under administrative control.

7.2.2.1.2.3.1.15 Multiple Setpoints (IEEE 279-1971, Paragraph 4.15)

The design requirement is not applicable to the following RPS trip variables because the setpoint values are fixed and do not vary with other reactor or plant parameters:

a) Scram discharge volume high water level trip

b) Main steamline isolation valve closure trip

c) Turbine stop valve closure trip

d) Turbine control valve fast closure trip

e) Reactor vessel low water level trip

f) Drywell high pressure trip

g) Reactor vessel high pressure trip

h) Neutron monitoring (OPRM) system trip

The trip setpoint of each IRM channel is established at the 95% of full scale mark for each range of IRM operation. The IRM is a linear, half-decade per range instrument. Therefore, as the operator switches an IRM from one range to the next, the trip setpoint tracks the operator's selection. In the startup mode, the APRM Neutron Flux – High trip is automatically changed to the “setdown” value, nominally 18% of Rated Thermal Power.

In the transition from the "Startup" to the "Run" mode of operation, the reactor system mode switch is used to convert from IRM and APRM protection to APRM protection.

In the run mode, the APRM Simulated Thermal Power – High trip is automatically varied in relation to recirculation flow. The flow sensors are Class 1E. The setpoint never exceeds 120% of rated neutron flux. For further discussion of the setpoint variation, refer to Subsection 7.6.1a.5.

Each of these multiple setpoint provisions is a portion of the reactor protection system and complies with the design requirements of IEEE 279.

Operation of the mode switch from one position to another imposes different RPS trip channels into the RPS logic in accordance with the reactor conditions implied by the given position of the mode switch. This action does not influence the established setpoint of any given RPS trip channel, but merely connects one set of channels as another set are disconnected. Consequently, the mode switch meets this design requirement.

7.2.2.1.2.3.1.16 Completion of Protective Action Once it is Initiated (IEEE 279-1971, Paragraph 4.16)

It is only necessary that the instrument channel remain in a tripped condition for a sufficient length of time to de-energize the scram contactors and open their seal-in contacts. Once this action is accomplished, the trip actuator logic proceeds to initiate reactor scram regardless of the state of the instrument channel that initiated the sequence of events.

Once the manual scram push buttons are depressed, it is only necessary to maintain them in that condition until the scram contactors have de-energized and opened their seal-in contacts. At this point, the trip actuator logic proceeds to initiate reactor scram regardless of the state of the manual scram push buttons.

The function of the mode switch is to provide appropriate RPS trip channels for the RPS trip logic on a steady-state basis for each of four given reactor operating states: shutdown, refuel, startup, and run. Protective action, in terms of the needed transient response, is derived from the other portions of the trip channels independent of the mode switch. Hence, the mode switch does not influence the completion of protective action in any manner.

The turbine operating bypass is put into effect only when the turbine first-stage pressure is at or below a preset level. For plant operation above this setpoint, the trip channels initiate protective action once the scram contactors have de-energized and opened the seal-in contact.

The trip actuator is normally energized and is sealed in by one of the power contacts to the trip logic string. Once the trip logic string has been open-circuited as a result of a process sensor trip channel becoming tripped or the depression of a manual scram pushbutton, the scram contactor seal-in contact opens, and completion of protective action is directed without regard to the state of the initiating process sensor trip channel. The interface of the RPS trip logic and the trip actuators ensures that this design requirement is accomplished.

Reset of the RPS logic is permissible only after a 10-second time delay and requires deliberate operator action.

7.2.2.1.2.3.1.17 Manual Actuation (IEEE 279-1971, Paragraph 4.17)

Four manual scram pushbutton controls are provided on one main control room panel to permit manual initiation of reactor scram at the system level. The four manual scram pushbuttons (one in each of the four RPS trip logics) comply with this design requirement. The logic for the manual scram is one-out-of-two twice. Failure of an automatic RPS function cannot prevent the manual portions of the system from initiating the protective action.

Additional back-up to these manual controls is provided by the Shutdown position of the Reactor System Mode Switch and by the electrical power controls associated with the RPS M-G sets.

No single failure in the manual or automatic portions of the system can prevent either a manual or automatic scram.

7.2.2.1.2.3.1.18 Access to Setpoint Adjustments, Calibration, and Test Points (IEEE 279-1971, Paragraph 4.18)

Access to setpoint adjustments, calibration controls, and test points for the RPS trip variables which are listed in Subsection 7.2.2.1.2.3.1.1 is under the administrative control of plant operations supervisory personnel.

7.2.2.1.2.3.1.19 Identification of Protective Actions (IEEE 279-1971, Paragraph 4.19)

When any one of the redundant sensors exceeds its setpoint value for the following RPS trip variables, a main control room annunciator is initiated to identify the particular variable:

a) Scram discharge volume high water level trip
b) Turbine control valve fast closure trip
c) Reactor vessel low water level trip
d) Neutron monitoring (APRM) system trip
e) Neutron monitoring (IRM) system trip
f) Drywell high pressure trip
g) Reactor vessel high pressure trip
h) Neutron monitoring (OPRM) system trip

Identification of the particular trip channel exceeding its setpoint is accomplished as a typed record from the process computer or visual observation of the relay contacts at the RPS panels.
When any manual scram pushbutton is depressed, a control room annunciation is initiated and a process computer record is produced to identify the tripped RPS trip logic.

Identification of the mode switch in shutdown position scram trip is provided by the manual scram and the process computer trip logic identification printout, and the mode switch in shutdown position annunciator.

Partial or full closure of any main steamline isolation or turbine stop valve causes a change in the status of position indicator lights in the control room. These indications are not a part of the reactor protection system but they do provide the operator with valid information pertinent to the valve status. Partial or full closure of one or both valves in a particular set of two main steamlines will initiate a control room annunciator when the trip setpoint has been exceeded. Partial or full closure of two or more turbine stop valves will initiate a control room annunciator when the trip point has been exceeded. This same condition will permit identification of the tripped channels in the form of a typed record from the process computer or by visual observation of the relay contacts at the RPS panels.

Neutron monitoring system annunciators provided in the control room indicate the source of the RPS trip. The process computer provides a typed record of the tripped neutron monitoring system channel as well as identification of individual IRM, OPRM and APRM channel trips. Each instrument channel, whether IRM, OPRM or APRM, has control room panel lights indicating the status of the channel for operator convenience.

Two control room annunciators are provided to identify the tripped portions of the RPS auto scram in addition to the previously described trip channel annunciators:

a) A1 or A2 trip logics tripped

b) B1 or B2 trip logics tripped

These same functions are connected through independent auxiliary contacts of the scram relays to the NSSS process computer to provide a typed record of the relay operations.

7.2.2.1.2.3.1.20 Information Readout (IEEE 279-1971, Paragraph 4.20)

The data presented to the control room operator for each of the RPS trip variables which are listed in Subsection 7.2.2.1.2.3.1.1 complies with this design requirement.

7.2.2.1.2.3.1.21 System Repair (IEEE 279-1971, Paragraph 4.21)

During periodic testing of the sensor channels for the following RPS trip variables, the operator can determine any defective component and have it replaced during plant operation:

a) Scram discharge volume high water level trip
b) Turbine control valve fast closure trip
c) Reactor vessel low water level trip
d) Drywell high pressure trip
e) Reactor vessel high pressure trip

During reactor operation, the control room operator will be able to determine failed sensors for the following RPS trip variables, but subsequent repair can only be accomplished during reactor shutdown:

g) Main steamline isolation valve closure trip

h) Turbine stop valve closure trip

i) Neutron monitoring (APRM) system trip

j) Neutron monitoring (IRM) system trip

k) Neutron monitoring (OPRM) system trip

Replacement of IRM and LPRM detectors must be accomplished during plant shutdown. Repair of the remaining portions of the neutron monitoring system may be accomplished during plant operation by appropriate bypassing of the defective instrument channel. The design of the system facilitates rapid diagnosis and repair.

7.2.2.1.2.3.1.22 Identification of Protection Systems (IEEE 279-1971, Paragraph 4.22)

Each system cabinet is marked with the words "Reactor Protection System" and the particular redundant portion is listed on a distinctively colored marker plate. Cabling outside the cabinets is identified specifically as Reactor Protection System Wiring. An identification scheme is used to distinguish between redundant cables and raceways. Redundant racks are identified by the identification marker plates of instruments on the racks. Control room panels are identified by tags on the panels, which indicate the function and identified the contained logic channels.

7.2.2.1.2.3.2 IEEE 308-1974

Criteria for Class 1E electric Systems - does not apply to the RPS. The RPS is fail safe and its power supplies are thus unnecessary for scram. A total loss of power will cause a scram. A loss of one power source will cause a trip system trip.

7.2.2.1.2.3.3 IEEE 317 - 1972

Refer to Section 3.13.

7.2.2.1.2.3.4

Intentionally Blank.

7.2.2.1.2.3.5 IEEE 336 - 1971

Refer to Section 3.13.

7.2.2.1.2.3.6 IEEE 338 - 1971

Periodic Testing of Protection Systems - is complied with by being able to test the RPS from sensors to final actuators at any time during plant operation. The test must be performed in overlapping portions.

7.2.2.1.2.3.7 IEEE 344 - 1971

Seismic Qualification of Class 1 Electric Equipment requirements are satisfied by all Class 1 RPS equipment as described in Section 3.10a.

7.2.2.1.2.3.8 IEEE 379 -1972

Application of the Single-Failure Criterion to Nuclear Power Generating Station Protection Systems - requirements are satisfied by consideration of the different types of failure and carefully designing all potential violations of the single-failure criterion out of the system.

7.2.2.1.2.3.9 IEEE 384 - 1974

This standard requires that instrumentation be located in separate cabinets or compartments of a cabinet. Subsection 7.2.1.1.4.7 discusses physical and electrical separation of component and instrumentation in panels associated with the Reactor Protection System. The separation provided meets the requirements of IEEE 279-1971, paragraph 4.6.
Additionally, the standard requires that redundant sensors and their connections to the process system be sufficiently separated to assure that functional capability of the protection system will be maintained despite any single design basis event or resulting effect.

The effect on sensor and sensing lines as a result of design basis events are discussed in Subsection 7.2.1.2.8. Redundant pressure taps are located at widely divergent points around the reactor vessel. The sensing lines are routed to the sensors through separate penetrations in the primary containment. Redundant sensors are located on separated racks outside the primary containment. The location and routing of sensors, sensing lines, and pressure taps meet the requirements of IEEE 279-1971, paragraph 4.6.

The discussion of compliance with the separation requirements of IEEE 384-1974 for Class 1E power supplies for the RPS is provided in Section 3.13.

7.2.2.1.2.4 Conformance to NRC Branch Technical Positions

7.2.2.1.2.4.1 Branch Technical Position EICSB 10

Seismic qualification requirements of all Class 1E RPS equipment are satisfied as described in Section 3.10a.

7.2.2.1.2.4.2 Branch Technical Position EICS/B21

Indication is provided to inform the operator that a system is inoperable as described in 7.2.2.1.2.1.5.

7.2.2.1.2.4.3 Branch Technical Position EICSB 22

The system is designed so that it may be tested during plant operation from sensor device to final actuator device. The test must be performed in overlapping portions so that an actual reactor scram will not occur as a result of the testing. There is no actuated equipment in the system which is not tested during plant operation.

7.2.2.1.2.4.4 Branch Technical Position EICSB 26

Anticipating or "backup" trips for the system do comply with the requirements of IEEE Std. 279-1971 as discussed in Subsection 7.2.2.1.2.3.1.

7.2.2.1.3 Additional Design Considerations Analyses

7.2.2.1.3.1 Spurious Rod Withdrawals

Spurious control rod removal will not normally cause a scram. A control rod withdrawal block may occur, however. Rod block is discussed in Subsection 7.6.1a.6 and is not part of the RPS. A scram will occur, however, if the spurious control rod withdrawal causes the average flux to exceed the trip setpoint.

7.2.2.1.3.2 Loss of Plant Instrument Air System

Loss of plant instrument air will cause the control rods to drift in, resulting in a scram.

7.2.2.1.3.3 Loss-of-Cooling Water to Vital Equipment

There is no loss-of-cooling water which will affect the RPS.

7.2.2.1.3.4 Plant Load Rejection

Electrical grid disturbances could cause a significant loss of load which would initiate a turbine-generator overspeed trip and control valves fast closure resulting in a reactor scram. The reactor scram occurs to anticipate an increase in reactor vessel pressure due to shutting off the path of steam flow to the turbine. Any additional increase in pressure will be prevented by the safety/relief valves which will open to relieve reactor pressure and close as pressure is reduced. The reactor core isolation cooling (RCIC) or high pressure coolant injection (HPCI) systems will automatically actuate and provide vessel makeup water if required.

The fuel temperature of RCPB thermal/hydraulic limits are not exceeded during this event as described in Chapter 15.

7.2.2.1.3.5 Turbine Trip

Initiation of turbine trip by the turbine system closes the turbine stop valves initiating a reactor scram. The reactor scram anticipates an increase in reactor pressure due to turbine stop valves closure. Any additional increase in reactor vessel pressure will be prevented by the safety/relief valves which will open to relieve reactor vessel pressure and close as pressure is reduced. The RCIC and HPCI will automatically actuate and provide vessel makeup water if low water level occurs.

Initiation of turbine trip by loss of condenser vacuum causes simultaneous closure of the turbine stop valves and main steam isolation valves initiating a reactor scram.
The fuel temperature or RCPB, thermal/hydraulic limits are not exceeded during these events as described in Chapter 15.

7.2.3 ALTERNATE ROD INJECTION SYSTEM

7.2.3.1 System Description

7.2.3.1.1 Identification

The Alternate Rod Injection (ARI) system consists of two divisionally separate trip systems which will depressurize the Control Rod Drive (CRD) scram air header on receipt of automatic or manual initiating signals. The net effect of this system is similar to the rapid shutdown effected by the Reactor Protection System backup scram valves. This system also isolates the scram discharge volume vent and drain lines. Each trip system shares its automatic initiation signals with the ATWS-Recirculation Pump Trip (ATWS-RPT) system, has manual initiation capability as well as operator trip system reset control in the main control room, provides annunciator, process computer, and Transient Monitoring System (TMS) inputs on actuation. Electrical maintenance bypasses for each ARI trip system and for the associated ATWS-RPT trip systems are provided to allow system testing while at power operation; each bypass is continuously alarmed in the main control room.

7.2.3.1.2 Classification

The ARI system is classified as a safety Class 2, with the exception of valve position indications, annunciator, process computer, and TMS outputs. Although not designed as a Seismic Category I, the ARI system is designed to withstand on Operating Basis Earthquake.

ARI is a balance of plant Class 1E system, but shall not be considered an Engineered Safety Feature (ESF) as defined by Table 1.8. Except where specifically noted, the ARI trip system complies with the requirements of IEEE Std. 279-1971.

7.2.3.1.3 Power Sources

ARI is powered from divisionally separate 125 VDC 1E power supplies. ARI trip capability will be continuously available during a loss of offsite power.

7.2.3.1.4 Equipment Design

7.2.3.1.4.1 General

ARI trip systems are distinguished by their associated electrical division, Division 1 and Division 2. Division 1 derives its automatic trip signals from process sensors with suffix A and C; Division 2 derives from sensors with suffix B and D.

Each trip system energizes two two-way solenoid valves. One valve serves to block the instrument air supply to the scram air header, the second opens a vent path for blowdown of the header which allows the CRD hydraulic system scram valves to open, rapidly inserting the control rods in the normal manner.

The divisionally separate block valves are arranged in parallel, each allowing 100% normal flow to the scram air header. The divisionally separate vent valves are arranged in series, allowing either vent valve to open for testing without venting the header.

Tripping both trip systems vents the air header which effectively inserts the control rods in the event that the RPS failed to do so, either by the normal scram pilot valves or by the existing backup scram valves. ARI will not interfere in any way with the normal scram process via the RPS system.

To restore an ARI trip system to normal operation following any single trip system actuation, the control room operator actuates a reset switch following a 25 second time delay. Following an ARI scram, where both trip systems have actuated, the operator must reset both trip systems by separate switches following a 25 second delay from actuation of the last of the two trip systems to trip (i.e., 25 seconds from when an ARI scram air header blowdown has been initiated).

7.2.3.1.4.2 Initiating Circuits

7.2.3.1.4.2.1 Input Parameter Selection

The selection of input parameters for ARI trip system actuation was based on ARI being an ATWS, not accident, mitigation system, and on the requirement that the design include prevention of unnecessary challenges to the safety system as a primary consideration. This second requirement leads to the requirement that the number of input parameters be kept to an absolute minimum.

RPV Pressure and Level - These parameters are direct indications of an ATWS event and are expected to exceed operating levels in an ATWS event which occurs at any operating power level.

MSIV closure - This is only applicable at high RPV pressures. Therefore, MSIV closure can be expected to increase pressure which will lead to ARI actuation. This parameter would constitute an unnecessary duplication of the RPV pressure input.

Primary Containment High Pressure - This parameter is indicative of an accident and therefore not required.

SDV High Water Level - This would be needed if there was an equipment failure causing an increase in SDV level and failure of the operator to take corrective action coincident with the transient and RPS failure. The probability of this sequence is judged to be sufficiently small to warrant exclusion of this parameter, particularly given the SDV level detection improvements made per 1E Bulletin 80-16.

Power (Neutron) Level - There is a close correlation between power level and RPV pressure. Therefore the RPV pressure input can be used to indicate a power excursion transient.

Loss of Offsite Power - The RPS scram on loss of off-site power is anticipatory in nature in that the power loss does not directly affect the core. Rather, equipment loss is expected to lead to vessel level reduction and/or a pressure increase. Since both of these parameters are included in ARI, duplication is unnecessary.

Manual Initiation - Manual initiation is provided in keeping with the plant operating and design philosophy, and in keeping with compliance with IEEE-279 (1971) standards for the ARI trip system.

7.2.3.1.4.2.2 Reactor Steam Dome Pressure - High

ARI utilizes reactor steam dome pressure instrumentation installed for ATWS-RPT. Each trip system measures reactor pressure at two locations. Instrument sensing lines penetrate containment and terminate in the reactor building at a non-indicating pressure switch. ARI shares the pressure switch output with the ATWS-RPT trip system up to and including the first trip channel relay. ARI derives a trip signal from that relay; cables from these local relays are routed to local, divisionally separate control and relay panels. At this point the separate pressure switch channels combine into the ARI trip system.

Single failure protection and diversity for the reactor pressure high signals are not required. See Subsection 7.2.3.1.4.5.

7.2.3.1.4.2.3 Reactor Vessel Water Level-Low

Reactor vessel water level is sensed by indicating differential pressure switches which sense the difference in pressure due to a constant reference column of water and the pressure due to the actual water level in the vessel. The level switches are arranged on two sets of taps, with the reference leg shared with the reactor pressure sensors, and the variable leg on the wide range tap. The sensing lines penetrate containment and are terminated at the level switches located in the reactor building.

The switch output is taken by cable directly to the local divisionally separate control and relay panels. At this point the separate level switch channels combine into the ARI trip system.

Single failure protection and diversity for the reactor water level-low signals are not required. See Subsection 7.2.3.1.4.5.

7.2.3.1.4.2.4 Manual Trip

The ARI trip system can be initiated manually from the main control room. There are two divisionally separate armed pushbutton switches located on the ECCS benchboard, which are adjacent to controls for the CRD hydraulic system and the Standby Liquid Control system. This provides a single location for operator control for all ATWS mitigation systems.

To initiate a manual scram, each pushbutton switch must be armed and depressed. Arming each pushbutton will activate an annunciator. The signal for each switch will be taken by cable to the local (Reactor Building) divisionally separate relay and control panel. At this point the manual trip channels combine into the ARI trip system.

7.2.3.1.4.3 Logic

The basic logic for the ARI trip system is illustrated in Figure 7.2-10. This system consists of two divisionally separate trip systems, each of which will trip on coincidental occurrence of two reactor low level signals or two reactor steam dome high pressure signals or on actuation of the manual initiation armed pushbutton switch. Both trip systems must actuate to produce an ARI scram. The overall logic for ARI can be considered two out of two taken twice. This trip system is not required to be single failure proof. See Section 7.2.4.1.1.2.
The ARI vent valves are sized such that the scram air header will depressurize rapidly enough that all control rods will have initiated their scram motion no later than 15 seconds from receipt of the trip signal.

The ARI trip system adds diversity to the trip logic of the existing RPS system (Subsection 7.2.3.1.4.5). ARI is an energize to actuate 125 VDC trip system, providing a reactor trip actuation by a different operating principle from RPS. ARI contains no diversity or redundancy within itself.

Channel and logic relays are fast-response, high reliability relays. Power relays for energizing the block and vent valve solenoid coils have high current carrying capabilities and are highly reliable.

ARI reset momentarily de-energizes the ARI trip and logic seal-in relay. If a single trip system has tripped, this reset may be effected after a 25 second time delay from the time of actuation. If both trip systems have tripped, this reset may be effected only after both trip systems' time delays have expired. This allows all control rods to fully insert before the logic reset can be effected.

7.2.3.1.4.4 ARI Operating and Maintenance Bypasses

There are no operating bypasses in the ARI system.

A bypass is provided in each trip system for system testing and maintenance. This bypass is effected from the local relay and control panel via keylocked switches. ARI bypasses are continuously alarmed in the control room.

ARI is inoperable when either trip system is bypassed or is otherwise inoperable.

Such bypasses are necessary to minimize the possibility of a spurious scram while at power. Without a maintenance and testing bypass, ARI is vulnerable to a spurious trip as a result of single electrical failure while the maintenance or testing activity is under way.

Bypasses are also provided for the associated division of the ATWS-Recirculation Pump Trip System (ATWS-RPT). The ATWS-RPT bypasses will prevent ATWS-RPT actuation while testing the associated ARI trip system. ATWS-RPT is a divisionally redundant system; actuation of either ATWS-RPT system is sufficient to trip both recirculation pumps (Ref. Fig. 7.7-7). Without these bypasses, ARI system testing would trip both recirculation pumps.

The ARI and ATWS-RPT bypasses are not expected to be used more often than once a year. Most bypasses for system testing are expected to occur during shutdown conditions.

Mechanical bypasses are provided to allow system maintenance while at power. Each bypass valve is keylocked in place. Manual bypass valve position indication is readily apparent by the orientation of the valve handle.

7.2.3.1.4.5 Redundancy and Diversity

ARI is divisionally redundant for prevention of spurious scrams.

ARI is fully redundant to the Reactor Protection System, except that the actuating instrumentation described in 7.2.3.1.4.2 share sensing lines with the RPS sensors monitoring these same process conditions (Subsection 7.2.1.1.4.2 paragraphs b and c). ARI is diverse from RPS in that the actuation logic operates on a different operating principle from RPS. Additional diversity is provided for the scram function within RPS and is not necessary within ARI.

7.2.3.1.4.6 Actuated Devices

The actuation trip systems energize one scram air header vent valve and one scram air header block valve each. Energizing all four valves will depressurize the scram air header. This will allow the diaphragm on each scram pilot valve to lift, allowing the scram valves to open, allowing the control rods to insert in the normal manner.

Depressurizing the scram air header will also isolate the scram discharge volume (SDV) vent and drain isolation valves.

Reset of the ARI trip system will re-pressurize the scram air header. If RPS had also tripped, RPS must be reset in order to fully return the CRD scram system operability. Note that the converse is also true.

Reset of the ARI trip systems will also open the SDV vent and drain line isolation valves. Each of these valves will open in the proper order to prevent water hammer transients.

7.2.3.1.4.7 Separation

Separation is maintained between ARI trip systems and between the ARI trip systems and RPS by following the separation requirements for divisional Balance of Plant 1E systems.

7.2.3.1.4.8 Testability

ARI contains sufficient bypass capability and operational redundancy to be fully testable, from actuating instrumentation to final actuation device (scram air header vent and block valves) while at power. Testing may be done with ARI logic bypasses in place to minimize the chance for spurious scram, or it may be done without ARI bypass, which would impose a half scram and would allow an ATWS induced trip while testing. ARI testing which includes actuation of the process sensors requires the use of the ATWS-RPT bypasses while at power (reference Subsection 7.2.3.1.4.4).

7.2.3.1.5 Environmental Considerations

All active components in the ARI trip systems are located in Reactor Building general access areas. The Reactor Building environment does not change appreciably in the time scale that ARI is expected to actuate. All components are designed to be installed in a normal industrial environment.

ARI is not required to be operable following a LOCA or High Energy Line Break. The ARI trip systems are electrically isolated from ESF systems powered from the same 1E 125 VDC power systems.

7.2.3.1.6 Operational Considerations

7.2.3.1.6.1 Reactor Operator Information

7.2.3.1.6.1.1 Indicators

Each ARI scram valve (scram air header block and vent valve) provides position indication in the main control room. Successful ARI initiation is evidenced by existing scram air header pressure low pressure alarms and by the full core display and nuclear instrumentation, as well as by the ARI valve position indicators and system trip annunciators.

7.2.3.1.6.1.2 Annunciators

Each ARI trip system produces an alarm when actuated. These alarms are located adjacent to the RPS scram alarms on the Unit Operating Benchboard. These alarms are derived from the ARI scram valve position switches.

Each ARI trip system manual scram pushbutton armed collar activates an annunciator when engaged. This alarm guards against inadvertent bypass of the protection against accidental manual initiation.

Each ARI trip system manual maintenance and testing electrical bypass activates an annunciator when engaged. Similarly, each ATWS RPT system bypass is annunciated when engaged. These alarms provide control room confirmation that the bypasses are invoked for testing and maintenance activities, and serve as constant indication that the bypasses are engaged.

Reset for all these alarms is not possible until the conditions causing the alarms have been cleared.

7.2.3.1.6.1.3 Computer Alarms

7.2.3.1.6.1.3.1 Process Computer System

All ARI trip events are recorded by the process computer system. The process computer also records each ARI system trip.

Use of the computer alarm display is not required for plant safety.

7.2.3.1.6.1.3.2 Transient Monitoring System

The ARI system trip alarms are recorded by the transient monitoring system (TMS). On Unit 2, separate trip system signals are combined within the TMS system to give an ARI scram point which triggers the TMS recording mode.

7.2.3.1.6.2 Reactor Operator Controls

All operator controls are located on the ECCS benchboard, grouped together with other controls used for ATWS mitigation-Standby Liquid Control and Control Rod Drive Hydraulic System controls.

Operator controls consist of armed pushbutton switches for manual initiation and pushbutton switches for system reset. Manual controls are separate for the divisional trip systems.

7.2.3.1.6.3 Setpoints

Automatic initiation of the ARI trip system is concurrent with the initiation of ATWS-RPT. Each system shares process instrumentation as described in Subsection 7.2.3.1.4.2.

a) Reactor Steam Dome Pressure - High

The Reactor high pressure setting is consistent with the design objectives of the License Topical Report NEDE-31096-A. Setpoints were chosen so as to minimize the possibility for spurious ARI actuation due to setpoint drift below the RPS setting, and to maximize the probability that the ARI setpoint will not drift above more Reactor pressure vessel relief valve settings than would prevent reactor pressure from reaching the ARI trip setpoint.

b) Reactor Water Level - Low

The Reactor low water level setting is consistent with the design objectives of the License Topical Report NEDE-31096-A. Setpoints were chosen so as to minimize the possibility for spurious ARI actuation due to setpoint drift above the RPS low water level setting.

c) Manual Trip

Pushbuttons are located in the control room for manual ARI initiation as described in Subsection 7.2.3.1.6.2.

7.2.3.1.7 Control Panels

ARI control panels are wall mounted enclosures located in a Reactor Building general access area, adjacent to the CRD Master Control Station. These panels are divisionally separate from each other and are also separate from all RPS logic and raceway. Each panel contains trip channel and trip system relays, trip channel status indication, power supply status indication, keylocked switches for ARI and ATWS-RPT bypass control, and isolation relays for system reset control.

Control room panels for ARI are described in Subsection 7.2.3.1.6.

7.2.3.1.8 Test Methods to Ensure ARI Reliability

Per Subsection 7.2.3.1.4.8, ARI is fully testable while at power, from the actuating instrumentation up to and including the final actuation devices, the ARI scram air header block and vent valves.

Channel calibration, channel checks and channel functional tests will be performed periodically during operation.

7.2.3.2 Design Bases

Design bases as required by IEEE-279-1971 Section 3 are referred to below. Full discussion of these bases is contained in the License Topical Report NEDE-31096-A.

7.2.3.2.1 Operating Conditions

ARI is required to mitigate the effects of a failure of the Reactor Protection System to effectively shut down the reactor. This capability is required for all power levels. ARI is not required during or following LOCA or Safe Shutdown Earthquake events.

7.2.3.2.2 Variables

See Subsection 7.2.3.1.4.2.

7.2.3.2.3 Sensors

None of the above sensors have a spatial dependence.

7.2.3.2.4 Operational Limits

Margins between ARI trip settings and operational limits are sufficient to assure (1) ARI will not trip before RPS has had a chance to do so, and (2) ARI will trip before HPCI injection is initiated and before the second bank of reactor vessel relief valves open, when the analysis accounts for instrument accuracies, calibration, and setpoint drifts.

7.2.3.2.5 Levels Requiring Protection Action

ARI must mitigate the effects of an electrical ATWS. The conditions which will always occur in an ATWS are high reactor pressure or low vessel water level.

7.2.3.2.6 Ranges of Energy Supply and Environmental Conditions

ARI is powered from 1E 125 VDC batteries. ARI is normally de-energized; loss of the 125 VDC power supply is alarmed in the control room.
Environmental conditions remain constant for all circumstances throughout which ARI is expected to perform.

7.2.3.2.7 Unusual Events

ARI is only required to operate under circumstances related to an ATWS event. ARI is operable under all anticipated operational occurrences except those associated with a LOCA or SSE.

7.2.3.2.8 Performance Requirements

ARI shall depressurize the CRD scram air header in order to insert all control rods and close the scram discharge volume vent and drain line isolation valves in the event that RPS has failed to do so.

All rods shall have begun insertion by 15 seconds from ARI initiation. Once initiated, the trip signals shall be sealed in long enough for successful completion of the ARI trip function. Additional performance requirements listed in NEDE-31096-A are met when this requirement is satisfied.

ARI shall not affect normal shutdown or scram discharge volume isolation by the RPS trip system.

7.2.3.3 Final System Drawings

ARI system piping and control valves are shown on Dwg. M-146, Sh. 1. Initiating instrumentation is shown on Dwgs. M-141, Sh. 1, and M-141, Sh. 2. Channel and trip system initiation logic diagrams are provided in this section.

Detailed logic, circuit, cabinet and panel layout drawings are provided under a separate cover.

7.2.4 ARI ANALYSIS

7.2.4.1 ARI General Functional Requirements Conformance

7.2.4.1.1 Conformance to Design Basis Requirements

7.2.4.1.1.1 Design Bases 7.1.2a.1.30

ARI is designed to produce a reactor scram in a manner functionally equivalent to the RPS backup scram valves. It has been demonstrated by test that rod insertion occurs quickly enough to assure all rods will be fully inserted before the scram discharge volume fills with water when effected by a single RPS backup scram valve. Scram air header blowdown pressure drop calculations have shown that all rods will begin insertion within 15 seconds of the ARI initiation signal when the vent path is through two vent valves in series. Control rod insertion travel time is not affected by ARI

initiation, so that scram time measurements and Technical Specifications requirements for rod insertion times are preserved. Therefore, scram performance when initiated by ARI is similar to the proven performance of the RPS backup scram valves.

The adequacy of instrument setpoints is discussed in Subsection 7.2.3.1.6.3. Assurance of completion of the protective action and reset capabilities are discussed in Subsection 7.2.3.1.4.3.

ARI exceeds the design basis for the system stated in NEDE-31096-A by using a Class 1E system and meeting the requirements of IEEE-279-1971. ARI is separate from RPS and has no effect on its operation.

ARI is powered from 125 VDC, Class 1E electrical power, and is an energize to trip actuation system.

All hardware is capable of performing its function in the normal environment of the Reactor Building general access areas. ATWS events will not alter the environment to which this system will be exposed in the time frame in which it is required to operate.

ARI is dynamically qualified for Operating Basis Earthquakes.

Testability of ARI is discussed in Subsection 7.2.3.1.4.8; separation within ARI and between ARI and RPS is discussed in Subsection 7.2.3.1.4.7; minimizing inadvertent trips and challenges is described in Subsection 7.2.3.1.6.3, 7.2.3.1.4.8, and 7.2.3.1.4.4.

Quality assurance requirements consistent with the system classification as described in Subsection 7.2.3.1.2 meet or exceed the NRC QA requirements for ARI trip systems.

7.2.4.1.1.2 Conformance to Specific Regulatory Requirements

7.2.4.1.1.2.1 Conformance to 10CFR50.62 (C)(3)

ARI is a reliable, Class 1E system which is fully diverse from and redundant to the Reactor Protection System. ARI is fully independent of the Reactor Protection System from initiating sensors to final actuation devices. ARI is an energize to actuate trip system which shares no components, cables, raceway, or control with RPS. Further compliance with the ATWS rule is as described in NEDE-31096-A.

7.2.4.1.1.2.2 Conformance to NRC Regulatory Guides

7.2.4.1.1.2.2.1 Regulatory Guide 1.22 (February 17,1972)

ARI testability is described in Subsection 7.2.3.1.4.8.

7.2.4.1.1.2.2.2 Regulatory Guide 1.30 (August 11, 1972)

See Subsection 3.13.

7.2.4.1.1.2.2.3 Regulatory Guide 1.53 (June, 1973)

ARI does not, in itself, conform to the single failure criterion, Section 4.2 of IEEE-279-1971. This is in conformance with 10CFR50.62(C)(3) which requires only that ARI be redundant to the existing Reactor Protection System. The Reactor Protection System is fully redundant within itself (reference Subsection 7.2.2.1.2.16). The purpose of ARI is to add diversity to the scram initiation process (RPS). Therefore, the scram trip system, taken as RPS and ARI together, is fully redundant and conforms to Regulatory Guide 1.53.

7.2.4.1.1.2.2.4 Regulatory Guide 1.62 (October, 1973)

Manual initiation provisions are described in Subsection 7.2.3.1.4.2.

7.2.4.1.1.2.2.5 Regulatory Guide 1.70 (September, 1975)

Sections 7.2.3 and 7.2.4 provide the information relevant to ARI which is required by Section 7.2 of Regulatory Guide 1.70 for the Reactor Protection System.

7.2.4.1.1.2.2.6 Regulatory Guide 1.75 (January, 1975)

Physical independence of ARI from the Reactor Protection System is controlled by designing ARI as a Balance of Plant Class 1E divisionally separate trip system. Divisional separation between the ARI trip system assures reliable operation and protection from spurious scrams due to a single failure of any active component.

7.2.4.1.1.2.3 Conformance to 10CFR50 Appendix A - General Design Criteria

7.2.4.1.1.2.3.1 General Design Criterion 1

ARI is designed, built, tested, and maintained as a Class 1E safety system. The provisions of the applicable quality assurance program meet or exceed the special quality requirements provided for per 10CFR50.62(D).

7.2.4.1.1.2.3.2 General Design Criterion 2

ARI is designed to withstand all normal operating occurrences, including operating basis earthquakes, and the environmental conditions in which it is required to function. These conditions do not include LOCA or HELB events.

7.2.4.1.1.2.3.3 General Design Criterion 3

ARI is designed not to degrade the fire protection provisions of other safety-related systems. No failure of ARI due to fire can impede RPS from performing its safety function.

7.2.4.1.1.2.3.4 General Design Criterion 4

See Sections 3.5 and 3.6. No failure of ARI due to missiles or pipe whip can impede RPS from performing its safety related function.

7.2.4.1.1.2.3.5 General Design Criterion 13

See Subsection 7.2.3.1.6.

7.2.4.1.1.2.3.6 General Design Criterion 19

See Subsection 7.2.3.1.6.

7.2.4.1.1.2.3.7 General Design Criterion 20

ARI will shut down the reactor in time that core coolable geometry is maintained. This is accomplished by tripping on high reactor pressure or on low vessel level before depressurization or high pressure injection systems are initiated.

7.2.4.1.1.2.3.8 General Design Criterion 21

ARI is designed to be reliable and fully testable while at power. The system is composed of safety-related components, installed, maintained, and tested as a safety related system.

The system is designed to minimize the possibility of a spurious scram due to misoperation or equipment failure.

Conformance to the Single Failure criterion is discussed in Subsection 7.2.4.1.1.2.2.3.

Removal of ARI from service for testing and maintenance does not affect the ability of RPS to perform its safety-related function.

7.2.4.1.1.2.3.9 General Design Criterion 22

ARI increases the diversity of the reactor trip initiation capability. ARI is designed to withstand all normal operating occurrences, including operating basis earthquakes.

7.2.4.1.1.2.3.10 General Design Criterion 23

The system is not designed to fail in the safe state; failure of a single component, including valves, sensors, cables, and power supplies, can prevent ARI from functioning. However, failure within ARI cannot cause the Reactor Protection System to fail. Therefore, for the overall safe shutdown capability, this criterion is satisfied by RPS. (See Subsection 7.2.2.1.2.2.14.)

7.2.4.1.1.2.3.11 General Design Criterion 24

This system has no control function and does not interfaces with any control systems.

7.2.4.1.1.2.3.12 General Design Criterion 29

ARI is designed to be reliable, testable, and fully maintainable under all operating conditions. ARI is designed and maintained as a Class 1E system.

Bypasses are provided to assure that single failures or spurious trip while testing will not result in a scram.

ARI provides an extra margin of safety to the overall plant shutdown capability over the reliability of the existing Reactor Protection System.

7.2.4.1.1.2.4 Conformance to Industry Standards

7.2.4.1.1.2.4.1 IEEE 279-1971

7.2.4.1.1.2.4.1.1 General Functional Requirements (IEEE 279-1971, Paragraph 4.1)

Automatic and manual controls are described in Subsection 7.2.3. Operating conditions and performance requirements are described in Subsection 7.2.3.

7.2.4.1.1.2.4.1.2 Single Failure Criterion (IEEE 279-1971, Paragraph 4.2)

The ARI trip system does not conform to the single failure criterion as an independent, stand alone system. However, the purpose of ARI is to provide diversity to the reactor trip system; where the existing Reactor Protection System relies on de-energization of 120 VAC trip systems, ARI is a 125 VDC, energize to actuate trip system. The potential for common cause failures to defeat the overall plant shutdown capability is minimized.

Because of the redundance provided in the existing Reactor Protection System, ARI is not required to be redundant within itself.

The single failure criterion does apply to the protection afforded against spurious trips and shutdowns: no single failure can cause a reactor scram via the ARI trip system. ARI bypasses are provided to maintain this protection during all modes of testing, maintenance, and surveillances.

7.2.4.1.1.2.4.1.3 Quality of Components (IEEE-279-1971, Paragraph 4.3)

ARI is a Class 1E, safety related trip system. Components used in the ARI trip system are all selected for their quality and reliability. All components in the trip system are commonly used, assuring high maintainability and operator/technician familiarity with the components. The pilot solenoid valves are similar to other safety related pilot valves.

7.2.4.1.1.2.4.1.4 Equipment Qualification (IEE-279-1971), Paragraph 4.4)

All components used in the ARI trip systems perform their safety related function in an environment which at no time is more severe than the environment which occurs during normal operation. Therefore, environmental qualification testing is not required per 10CFR50.49.
All components are qualified for anticipated operational occurrences, including Operational Basis Earthquakes. The probability that an electrical ATWS would occur concurrent with a Safe Shutdown Earthquake (SSE) is sufficiently small that SSE qualification is not required.

7.2.4.1.1.2.4.1.5 Channel Integrity (IEEE 279-1971, Paragraph 4.5)

The ARI trip system is designed to operate under all anticipated operational occurrences, which include normal environmental extremes, trip system power supply fluctuations, and ATWS events.

7.2.4.1.1.2.4.1.6 Channel Independence (IEEE 279-1971, Paragraph 4.6)

The ARI trip systems are independent to the extent required of divisionally separate trip systems. ARI is similarly independent of and separate from the Reactor Protection System per the electrical separation requirements.

7.2.4.1.1.2.4.1.7 Control and Protection System Interaction (IEEE 279-1971, Paragraph 4.7)

No ARI trip channels or actuation devices are used for control functions. No control system failures can affect the operation of the ARI trip system.

7.2.4.1.1.2.4.1.8 Derivation of System Inputs (IEEE 279-1971, Paragraph 4.8)

ARI trip system variables are defined in Subsection 7.2.3.1.4.2. These variables were chosen to be indicative of an ATWS condition, with the setpoints chosen in accordance with Subsection 7.2.3.1.6.3.

7.2.4.1.1.2.4.1.9 Capability for Sensor Checks (IEEE 279-1971, Paragraph 4.9)

Each trip channel can be checked under any operating mode without causing a trip system actuation; the logic is described in Subsection 7.2.3.1.4.3, and bypasses are described in Subsection 7.2.3.1.4.4. Sensors are checked by imposing a simulated process signal to the sensor input.

7.2.4.1.1.2.4.1.10 Capability for Test and Calibration (IEEE-279-1971 Section 4.10)

Testability is described in Subsection 7.2.3.1.4.8.

7.2.4.1.1.2.4.1.11 Channel Bypasses for Removal from (IEEE 279-1971, Paragraph 4.11)

Each individual channel of the ARI trip system may be tested and maintained without causing a scram actuation. In view of the redundancy afforded by the Reactor Protection System (Subsection 7.2.4.1.1.2.4.1.2) and the importance of preventing a spurious scram, bypasses may be imposed, as described in Subsection 7.2.3.1.4.4, which can defeat the ARI trip function for the duration of the bypass.

7.2.4.1.1.2.4.1.12 Operating Bypasses (IEEE 279-1971, Paragraph 4.12)

ARI contains no operating bypasses.

7.2.4.1.1.2.4.1.13 Indication of Bypasses (IEEE 279-1971, Paragraph 4.13)

Bypass indications are described in Subsection 7.2.3.1.6.1.2.

7.2.4.1.1.2.4.1.14 Access to Means for Bypassing (IEEE 279-1971, Paragraph 4.14)

Bypass control is described in Subsection 7.2.3.1.4.4.

7.2.4.1.1.2.4.1.15 Multiple Setpoints (IEEE 279-1971, Paragraph 4.15)

This paragraph does not apply to the ARI trip system. Setpoints are described in Subsection 7.2.3.1.6.3.

7.2.4.1.1.2.4.1.16 Completion of Protective Action Once it is Initiated (IEEE 279-1971, Paragraph 4.16)

Each ARI trip system is sealed in for 25 seconds following actuation of both trip systems, as required to initiate an ARI scram. Resets for each of the divisionally separate trip systems are inhibited until both trip systems have timed out. Seal in circuits are separated by electrical isolation devices.

Reset controls are located in the main control room and requires deliberate operator action. Reset of either trip system will return the CRD scram trip system to normal operation.

7.2.4.1.1.2.4.1.17 Manual Initiation (IEEE 279-1971, Paragraph 4.17)

Capability for manual initiation as described in Subsection 7.2.3.1.4.2.

7.2.4.1.1.2.4.1.18 Access to Setpoint Adjustments, Calibration, and Test Points (IEEE 279-1971, Paragraph 4.18)

Access to setpoint adjustments and test points is covered under the administrative control of plant operations supervision.

7.2.4.1.1.2.4.1.19 Identification of Protective Actions

Actuation of the divisional ARI trip systems is annunciated in the main control room. The plant computer system records the actuation of all automatic and manual initiation trip signals. The plant variables monitored by the ARI trip systems are annunciated when the warning level and RPS trip level setpoints are exceeded. The RPS trip system annunciators will precede the initiation of the corresponding ARI trip channels.

7.2.4.1.1.2.4.1.20 Information Readout (IEEE 279-1971, Paragraph 4.20)

Information readout is described in Subsection 7.2.3.1.6.1.

7.2.4.1.1.2.4.1.21 System Repair (IEEE 279-1971, Paragraph 4.21)

The system is fully testable, from initiating sensors up to and including the final actuation devices per Subsection 7.2.3.1.4.8. Bypasses are provided per Subsection 7.2.3.1.4.4 to allow maintenance and repair activities during operation.

7.2.1.1.2.4.1.22 Identification of Protection Systems (IEEE 279-1971, Paragraph 4.22)

All major components (control room devices, local panels, and final actuation devices) are labeled with device identification and system designations where appropriate. Interconnecting cables are identified by their divisional separation designation and scheme identification tags.

7.2.4.1.1.2.4.2 IEEE 336-1971

See Section 3.13.

7.2.4.1.1.2.4.3 IEEE 338-1971

Periodic testing of Nuclear Power Plant Safety Systems - is complied with by being able to test ARI from initiating sensors up to and including the final actuating devices during plant operation, as well as when the plant is shut down.

7.2.4.1.1.2.4.4 IEEE 344-1975

Seismic Qualification and Class 1 Electric Equipment - Requirements are satisfied by qualifying all system components for anticipated operational occurrences, including operating basis earthquakes. Qualification to Safe Shutdown Earthquake levels is not required.

7.2.4.1.1.2.4.5 IEEE 384-1981

Independence of Class 1E Equipment and circuits - Requirements are satisfied by conformance to divisional separation requirements for Balance of Plant 1E trip systems. ARI is therefore fully separate from RPS.

7.2.4.1.1.2.5 Branch Technical Positions

7.2.4.1.1.2.5.1 EICSB-10

See Subsection 7.2.4.1.1.2.4.4.

7.2.4.1.1.2.5.2 EICSB-21

See Subsection 7.2.3.1.6.

7.2.4.1.1.2.5.3 EICSB-22

See Subsection 7.2.3.1.4.8.

7.2.4.1.1.2.5.4 EICSB-24

ARI trip system response time verification is measured directly on a periodic basis of the trip channels described in Subsection 7.2.3.1.4.2.

TABLE 7.2-1

REACTOR PROTECTION SYSTEM INSTRUMENTATION SPECIFICATIONS

Scram Function	Instrument	Normal Range[1]
Reactor vessel dome pressure	Pressure Switch	1050 psig [2]
Drywell high	Pressure Switch	0.65 to 0.85 psig
Reactor vessel low water level	Level Switch	567.5 to 577.5” above vessel zero
Scram discharge volume high water level	- Level Switch - Level Transmitter	Empty [3] Empty
Turbine stop valve closure	Position Switch	Fully open to fully closed[4]
Turbine control valve fast closure	Pressure Switch	1100- 1600 psig
Main steamline isolation valve closure	Position Switch	Fully open to fully closed[4]
Neutron Monitoring System	See Subsection 7.6. 1a.5	
Discharge Volume High Water Level Trip Bypass	N/A	N/A
Turbine Stop Valve and Control Valve Fast Closure Trip Bypass	Pressure Switch	100 – 1200 psig

(1) See Technical Requirements Manual for the trip setpoints; and the plant Technical Specifications for Allowable Values, where applicable.
(2) Pressure corresponds to 100% rated, power.
(3) Steady state operational limits of the measured variables.
(4) Fully open during normal RUN mode operation.

Table Rev. 56

TABLE 7.2-2

CHANNELS REQUIRED FOR FUNCTIONAL PERFORMANCE OF RPS

This table shows the normal number of sensors required for the functional performance of the reactor protection system in the run mode.

Channel Description	Normal
Neutron monitoring system (APRM)	4
Neutron monitoring system (IRM) *	8
Nuclear system high pressure	4
Containment high pressure	4
Reactor vessel low water level	4
Scram discharge volume high water level, float switches	4
Manual scram	4
Each main steamline isolation valve position	2/valve
Each turbine stop valve position	2/valve
Turbine control valve fast closure	4
Turbine first stage pressure (Bypass channel)	4
Scram discharge volume high water level, level transmitter/trip units	4
Neutron monitoring system (OPRM)	4

* In all modes except run.

TABLE 7.2-3

ATWS RECIRCULATION PUMP TRIP AND ALTERNATE ROD INJECTION INSTRUMENTATION SPECIFICATIONS

Page 1 of 1

Parameter	Instrument	Normal Operating[1] Range
Reactor vessel pressure-high	Pressure Switch	1050 psig [2]
Reactor vessel low water level	Level (differential pressure) switch	30 to 79 inches above instrument zero

(1) See the Technical Requirements Manual for the trip setpoints; and the plant Technical Specifications for the Allowable Values.

(2) Pressure corresponds to 100% power.

TABLE 7.2-4

CHANNELS REQUIRED FOR FUNCTIONAL PERFORMANCE OF ARI

This table shows the normal number of sensors required for initiation of the ARI system. These sensors are evenly divided among divisionally separate trip channels.

Channel Description	Normal
Reactor vessel high pressure	4
Reactor vessel low water level	4
Manual trip	2

FIGURE 7.2-1-1 REPLACED BY DWG. M1-C72-2, SH. 1

FIGURE 7.2-1-2 REPLACED BY DWG. M1-C72-2, SH. 2

FIGURE 7.2-1-3 REPLACED BY DWG. M1-C72-2, SH. 3

FIGURE 7.2-1-4 REPLACED BY DWG. M1-C72-2, SH. 4

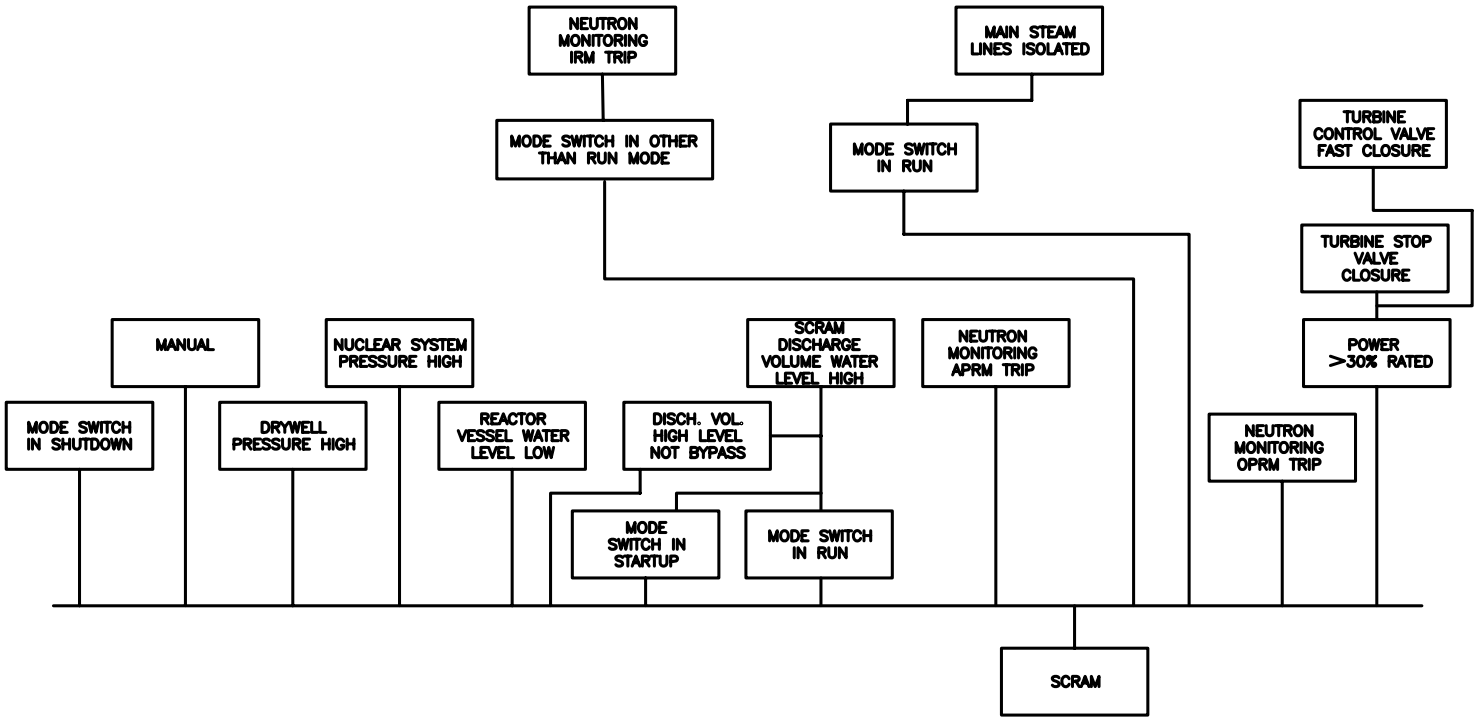

FSAR REV.65

SUSQUEHANNA STEAM ELECTRIC STATION
UNITS 1 & 2
FINAL SAFETY ANALYSIS REPORT

REACTOR PROTECTION SYSTEM
SCRAM FUNCTIONS

FIGURE 7.2-2, Rev 51

AutoCAD: Figure Fsar 7_2_2.dwg

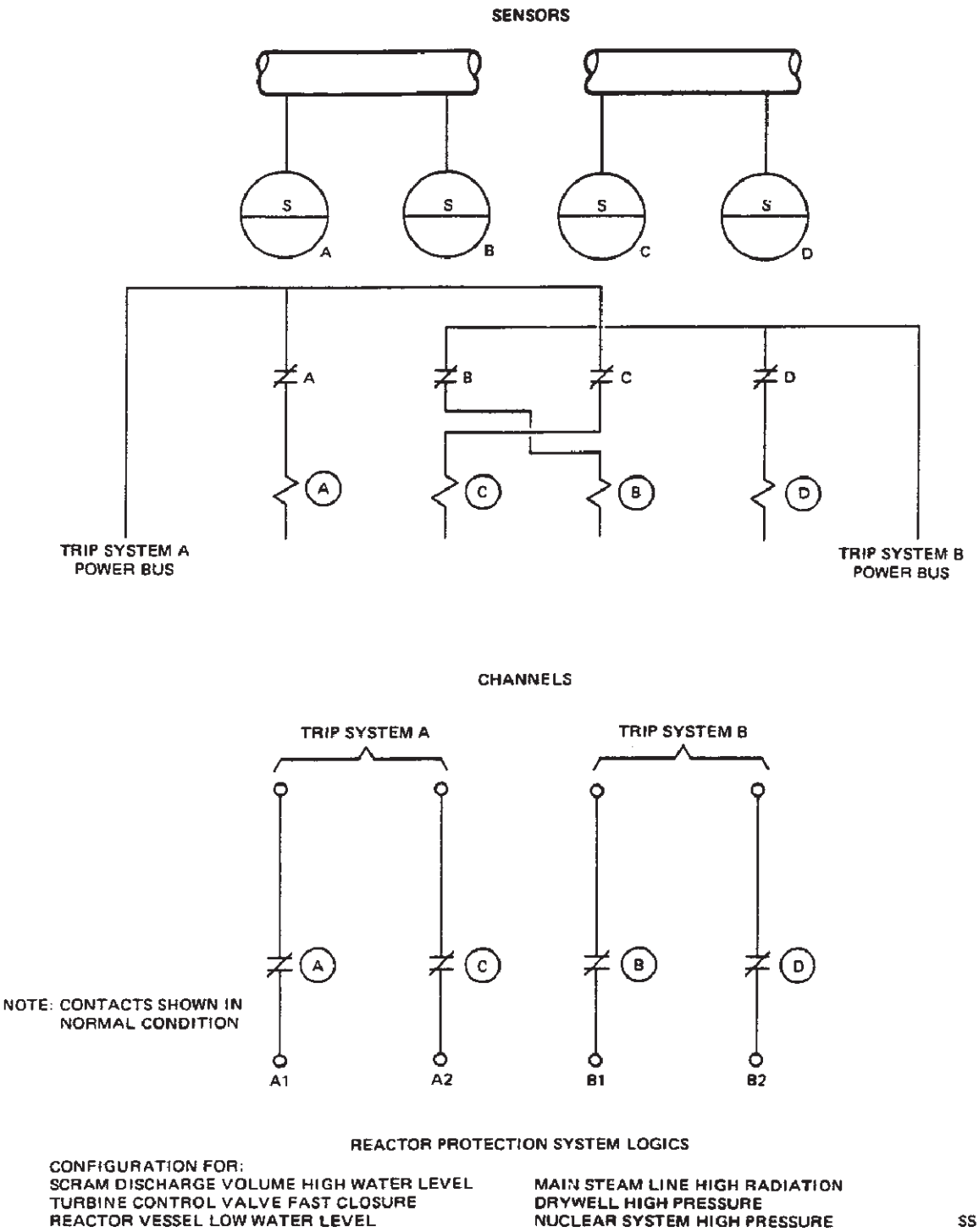

FSAR REV.65

SUSQUEHANNA STEAM ELECTRIC STATION
UNITS 1 & 2
FINAL SAFETY ANALYSIS REPORT

ARRANGEMENT OF CHANNELS
AND LOGICS

FIGURE 7.2-3, Rev 49

AutoCAD: Figure Fsar 7_2_3.dwg

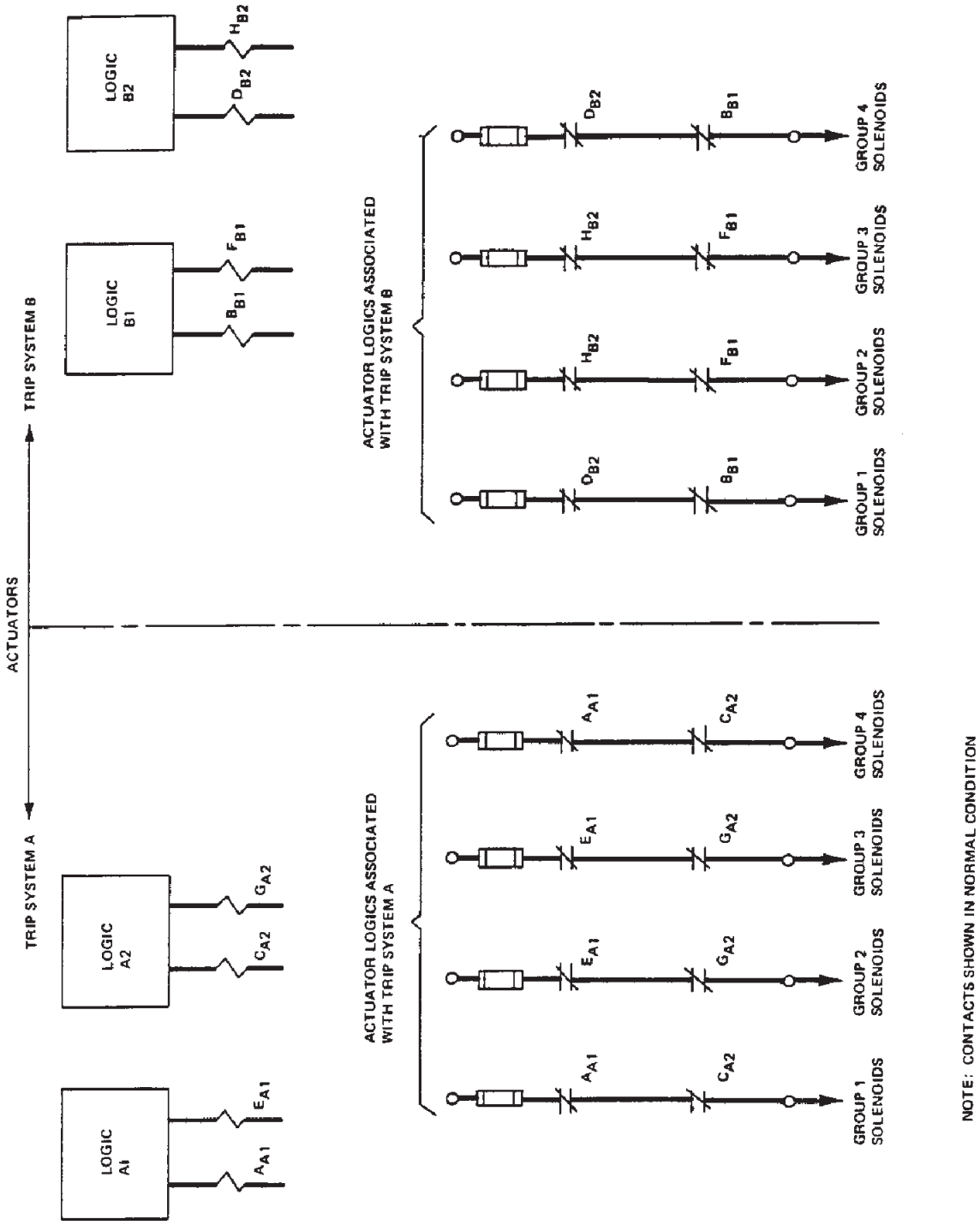

FSAR REV.65

SUSQUEHANNA STEAM ELECTRIC STATION
UNITS 1 & 2
FINAL SAFETY ANALYSIS REPORT

ACTUATORS AND ACTUATOR LOGICS

FIGURE 7.2-4, Rev 49

AutoCAD: Figure Fsar 7_2_4.dwg

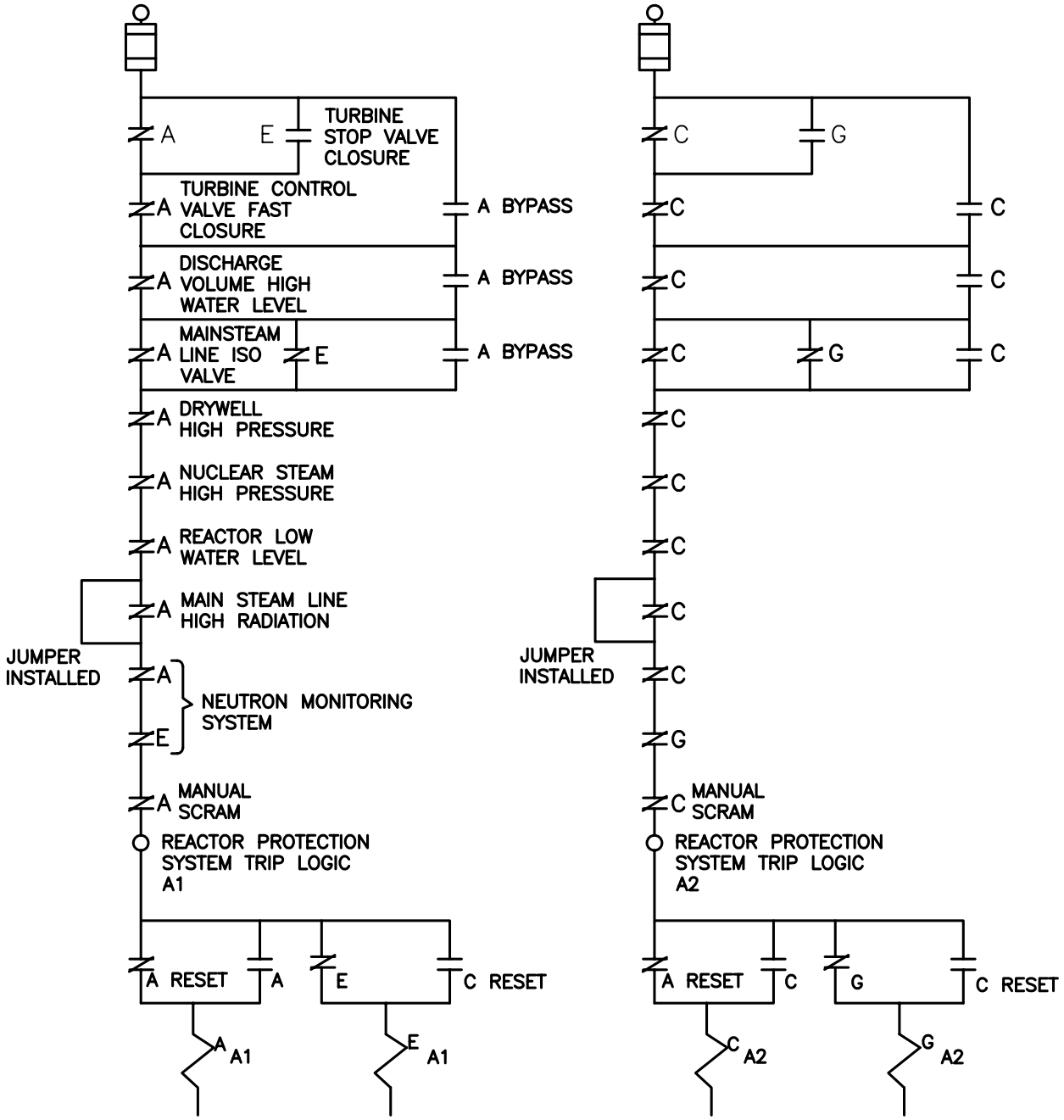

NOTE: CONTACTS SHOWN IN NORMAL CONDITION

FSAR REV.65

SUSQUEHANNA STEAM ELECTRIC STATION
UNITS 1 & 2
FINAL SAFETY ANALYSIS REPORT

LOGIC IN ONE TRIP SYSTEM

FIGURE 7.2-5, Rev 57

AutoCAD: Figure Fsar 7_2_5.dwg

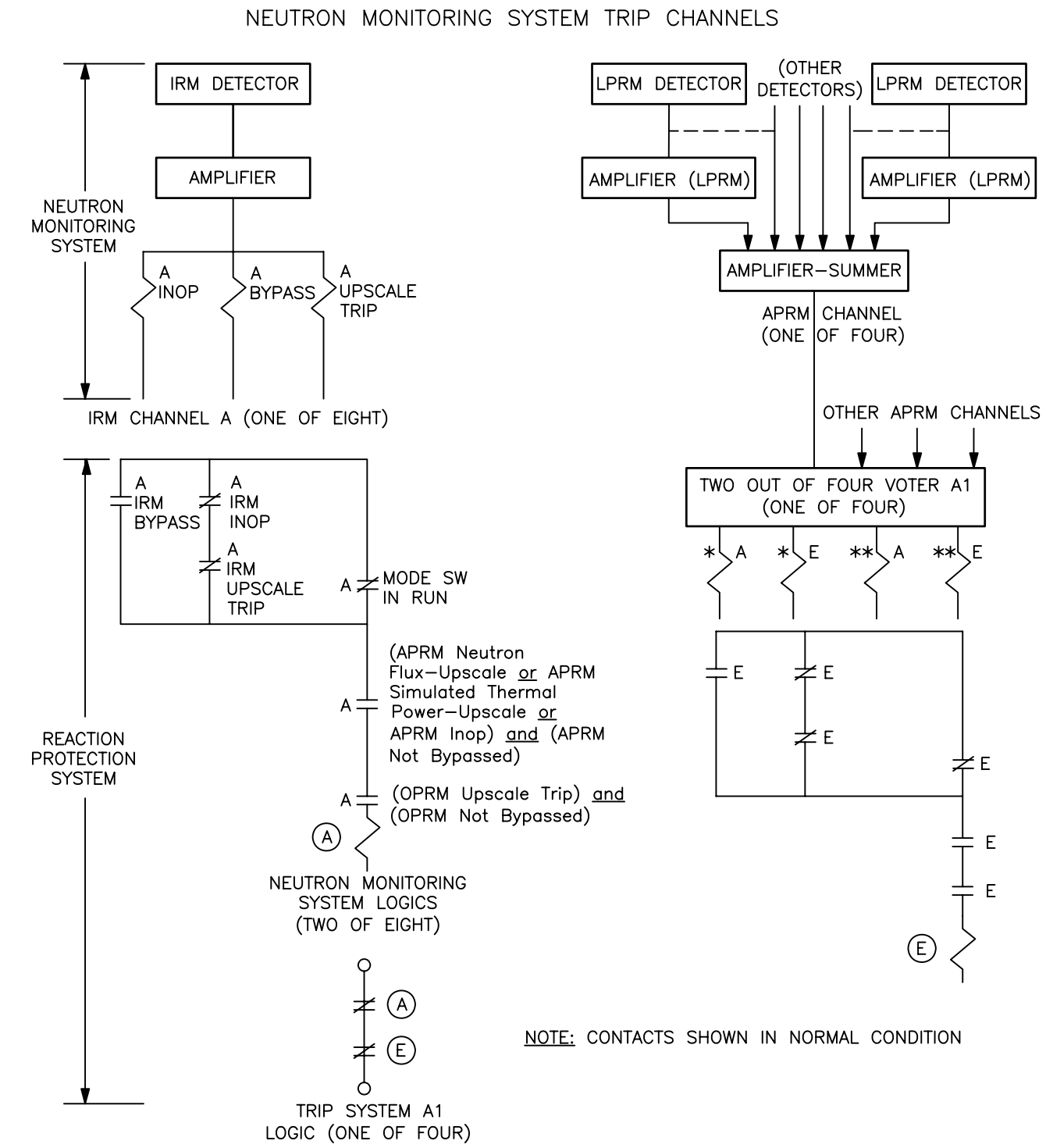

* (APRM Neutron Flux–Upscale or APRM Simulated Thermal Power–Upscale or APRM Inop) and (APRM Not Bypassed)

** (OPRM Upscale Trip) and (OPRM Not Bypassed)

FSAR REV.65

SUSQUEHANNA STEAM ELECTRIC STATION
UNITS 1 & 2
FINAL SAFETY ANALYSIS REPORT

RELATIONSHIP BETWEEN NEUTRON MONITORING SYSTEM & REACTOR PROTECTION SYSTEM

FIGURE 7.2-6, Rev 57

AutoCAD: Figure Fsar 7_2_6.dwg

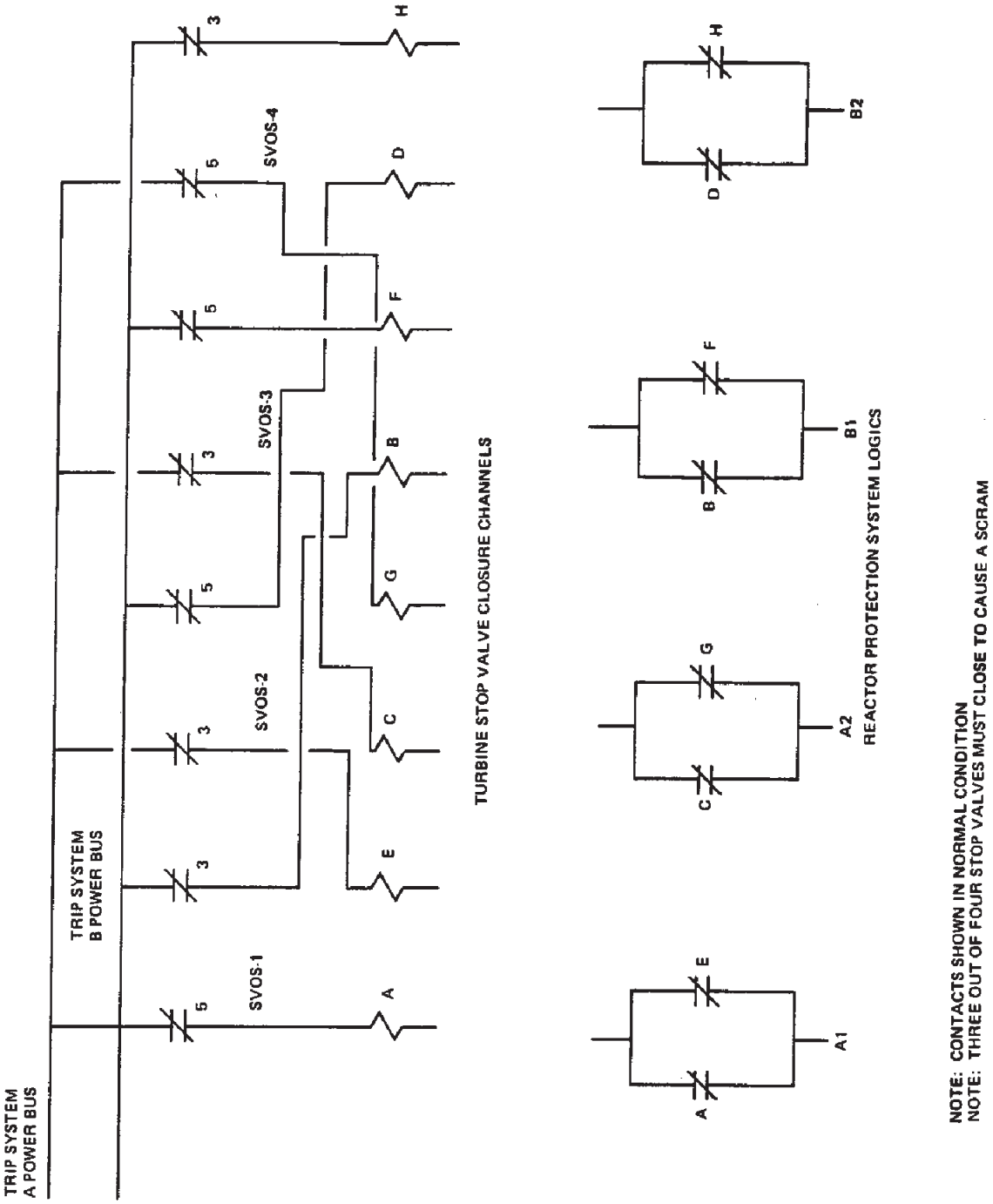

FSAR REV.65

SUSQUEHANNA STEAM ELECTRIC STATION
UNITS 1 & 2
FINAL SAFETY ANALYSIS REPORT

CONFIGURATION FOR TURBINE
STOP VALVE CLOSURE REACTOR
TRIP

FIGURE 7.2-7, Rev 49

AutoCAD: Figure Fsar 7_2_7.dwg

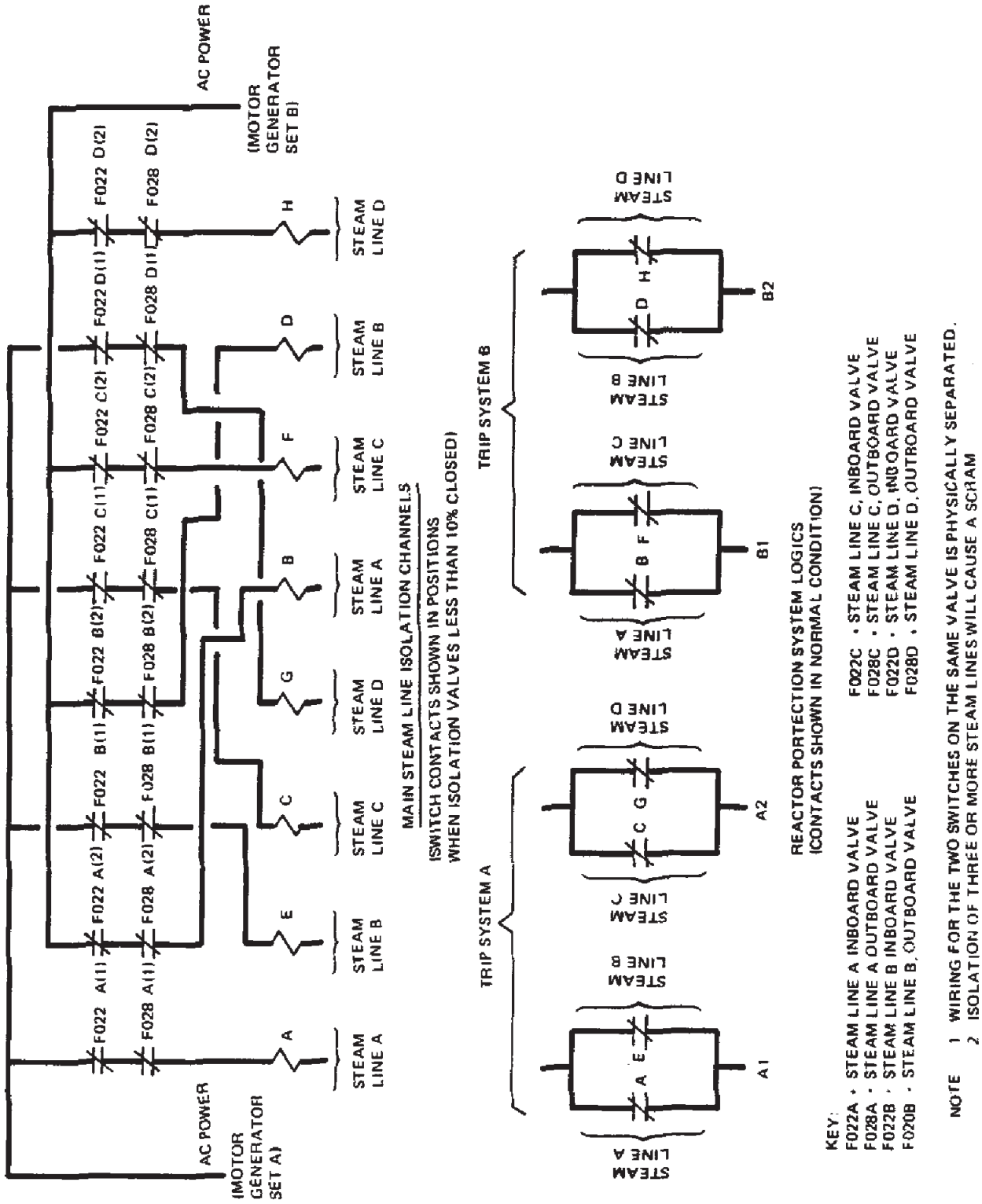

FSAR REV.65

SUSQUEHANNA STEAM ELECTRIC STATION
UNITS 1 & 2
FINAL SAFETY ANALYSIS REPORT

CONFIGURATION FOR MAIN
STEAMLINE ISOLATION
REACTOR TRIP

FIGURE 7.2-8, Rev 49

AutoCAD: Figure Fsar 7_2_8.dwg

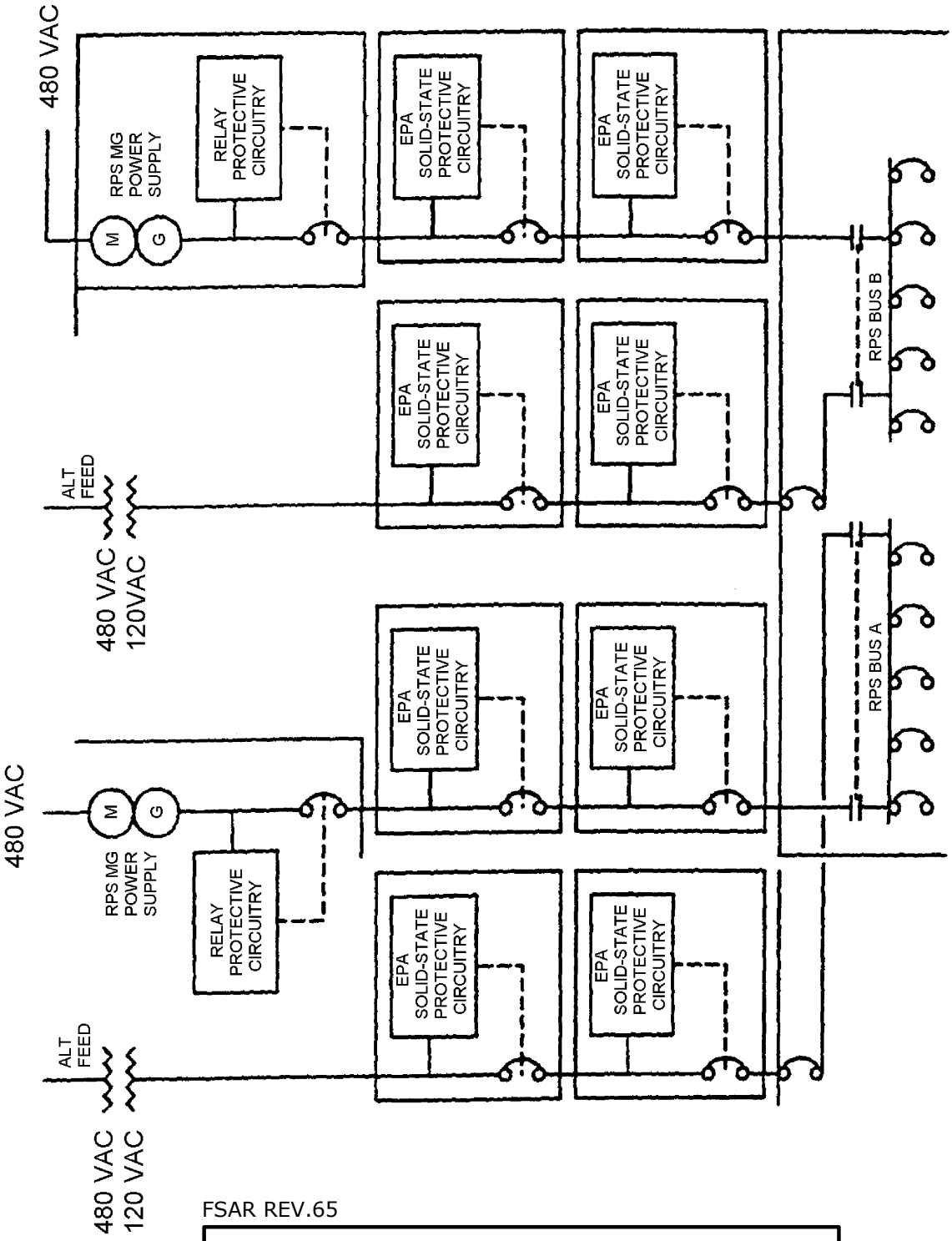

FSAR REV.65

SUSQUEHANNA STEAM ELECTRIC STATION
UNITS 1 & 2
FINAL SAFETY ANALYSIS REPORT

BLOCK DIAGRAM - RPS
PROTECTIVE CIRCUIT -
ELECTRICAL PROTECTION
ASSEMBLY(EPA)

FIGURE 7.2-9, Rev 55

AutoCAD: Figure Fsar 7_2_9.dwg

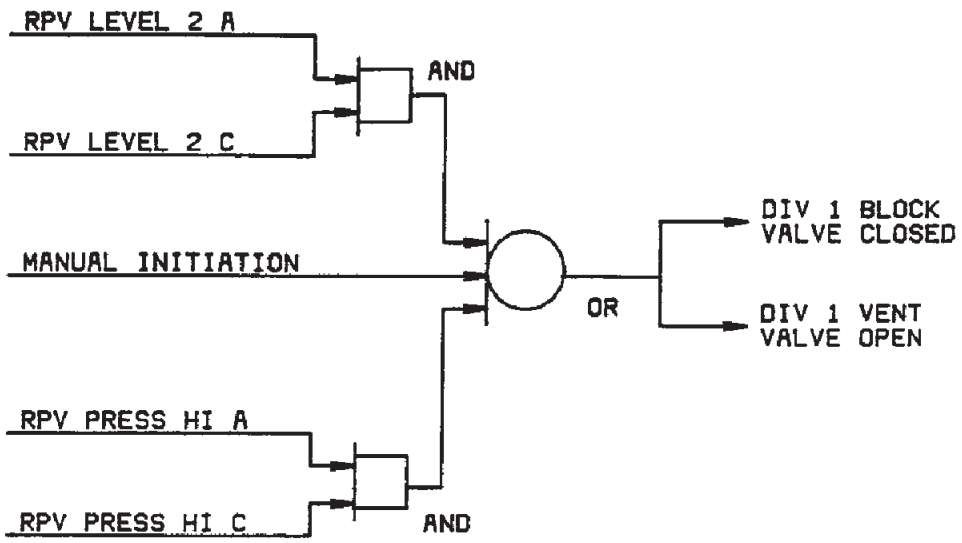

ATWS-ARI TRIP SYSTEM INITIATION

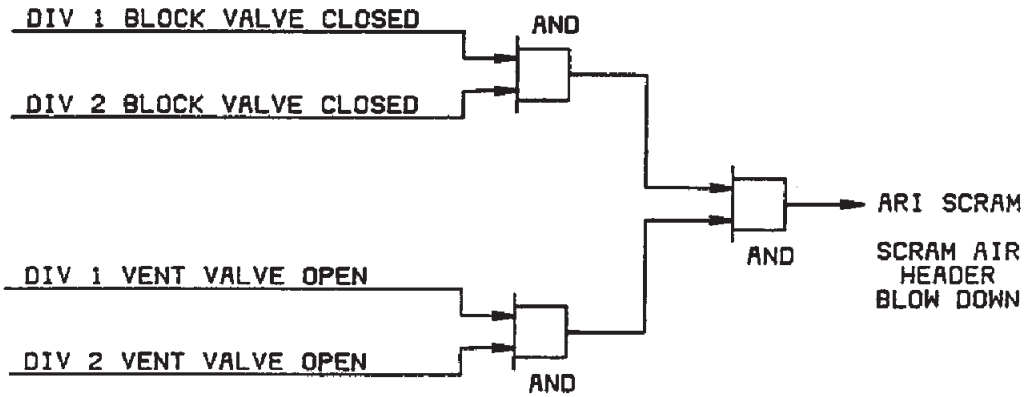

ARI SCRAM ACTUATION

FSAR REV.65

SUSQUEHANNA STEAM ELECTRIC STATION
UNITS 1 & 2
FINAL SAFETY ANALYSIS REPORT

AIR TRIP SYSTEM LOGIC

FIGURE 7.2-10, Rev 49

AutoCAD: Figure Fsar 7_2_10.dwg

7.3 ENGINEERED SAFETY FEATURE SYSTEMS

Safety-related instrumentation and controls for engineered safety feature (ESF) systems, i.e., the actuation system (AS) from sensor to actuation device and controls for the ESF system, which are engineered safety feature actuation systems (ESFAS), are described in this section. Instrumentation and controls for systems which support ESF systems are also described.

This section is divided by responsibility as to supply, with NSSS and non-NSSS in Subsections A and B respectively.

7.3.1 DESCRIPTION

A) ESF Actuation Systems Supplied with the NSSS

1) Emergency Core Cooling Systems (ECCS)

2) Primary Containment and Reactor Vessel Isolation Control Systems (PCRVICS)

3) RHRS/Containment Spray Cooling System

4) RHRS Suppression Pool Cooling

B) ESF Actuation Systems and ESF Aux Support Systems Not Supplied with the NSSS.

1) Containment Isolation (AS)

2) Combustible Gas Control Systems (AS)

3) Primary Containment Vacuum Relief (AS)

4) Standby Gas Treatment System (AS)

5) Reactor Building Recirculation (AS)

6) Reactor Building Isolation (AS) and HVAC Support

7) Habitability Systems (AS), Control Room Isolation and Supporting HVAC Systems

8) ESF Auxiliary Support Systems

a) Emergency Service Water

b) RHR Service Water

c) Containment Instrument Gas

d) Standby Power

9) Heating, Ventilating and Air Conditioning for ESF Areas:

a) Standby Gas Treatment Equipment Room

b) Diesel Generator Buildings

c) ESSW Pumphouse

d) ESF Switchgear Room

e) ECCS Unit Coolers

f) Drywell Unit Coolers

g) Control Structure Chilled Water System

7.3.1.1a System Description (NSSS)

7.3.1.1a.1 Emergency Core Cooling Systems (ECCS) Instrumentation and Control

7.3.1.1a.1.1 Network Identification

The ECCS is a network of the following subsystems:

(1) High Pressure Coolant Injection (HPCI) System

(2) Automatic Depressurization (ADS) System

(3) Core Spray (CS) Systems

(4) Low Pressure Coolant Injection (LPCI) Mode of the Residual Heat Removal System (RHR)

The purpose of ECCS instrumentation and controls is to initiate appropriate responses from the system to ensure that the fuel is adequately cooled in the event of a design basis accident. The cooling provided by the system restricts the release of radioactive materials from the fuel by preventing or limiting the extent of fuel damage following situations in which coolant is lost from the reactor coolant pressure boundary (RCPB).

The ECCS instrumentation detects a need for core cooling systems operation, and the trip systems initiate the appropriate response.

Successful core cooling for a specified line break accident is discussed in Chapter 15.

7.3.1.1a.1.2 Network Power Sources

The instrumentation and controls of the ECCS network system are powered by the 125 VDC and 120 VAC systems. The redundancy and separation of these systems are consistent with the redundancy and separation of the ECCS functional requirements. These power sources are described in detail in Chapter 8.0.

7.3.1.1a.1.3 High Pressure Coolant Injection (HPCI) System – Instrumentation and Controls

7.3.1.1a.1.3.1 System Identification

When actuated, the HPCI system pumps water from either the condensate storage tank, the primary source, or the suppression chamber to the reactor vessel via the feedwater lines. The HPCI system includes one turbine-driven pump, one DC motor-driven auxiliary oil pump, one gland seal condenser and associated condensate pump, one gland seal condenser blower, automatic valves, control devices for this equipment, sensors, and logic circuitry. The arrangement of equipment and control devices is shown in Dwgs. M-155, Sh. 1 and M-156, Sh. 1.

7.3.1.1a.1.3.2 Equipment Design

Pressure and level switches used in the HPCI system are located on racks in the reactor building and at the condensate storage tank. The only active component for the HPCI system that is located inside the primary containment is one of the two HPCI system turbine steam supply line isolation valves and its associated warm-up value. The rest of the HPCI system control and instrumentation components are located outside the primary containment. Cables connect the sensors to control circuitry in the control structure. The system is arranged to allow a full flow functional test of the system during normal reactor power operation. The test controls are arranged so that the system can operate automatically to fulfill its safety function regardless of the test being conducted except for the conditions discussed in Section 6.3.4.2.1.

7.3.1.1a.1.3.3 Initiating Circuits

Reactor vessel low water level is monitored by four indicating type level switches that sense the difference between the pressure due to a constant reference column of water and the pressure due to the actual height of water in the vessel. Two lines (one attached to a tap above and one to a tap below the water level on the reactor vessel) are required for the differential pressure measurement for each switch. The two pairs of lines terminate outside the primary containment and inside the reactor building. The pairs are physically separated from each other and tap off the reactor vessel at widely separated points. These same lines are also used for pressure and water level instruments for other systems. A one-out-of-two twice logic arrangement of the switches sensing low water level can initiate the HPCI system. This arrangement assures that no single event can prevent the initiation of the HPCI system due to reactor vessel low water level.

Primary containment pressure is monitored by four non-indicating pressure switches which are mounted on instrument racks outside the drywell, but inside the reactor building. Each instrument is connected to the drywell atmosphere by a redundant sensing line. The switches are grouped in pairs in a manner similar to the level sensors, and are electrically connected so that no single event can prevent the initiation of the HPCI system due to primary containment high pressure.

The HPCI system controls automatically start the HPCI system from the receipt of a reactor vessel low water level signal or primary containment high pressure signal and bring the system to its design flow rate in approximately 30 seconds. The controls then function to provide design makeup water flow to the reactor vessel until the amount of water delivered to the reactor vessel is adequate, at which time the HPCI system automatically shuts down. The controls are arranged to allow remote-manual startup, operation, and shutdown.

The HPCI turbine is functionally controlled as shown in Dwgs. **M1-E41-65, Sh. 1**, M1-E41-65, Sh. 2, **M1-E41-65, Sh. 3**, M1-E41-65, Sh. 4, and **M1-E41-65, Sh. 5**. A turbine governor control system controls turbine speed during normal operation. A control governor receives a HPCI system flow signal and adjusts the turbine steam control valve so that design HPCI system pump discharge flow rate is obtained. Manual control of the governor is possible. The flow signal used for automatic control of the turbine is derived from a differential pressure measurement across a flow element in the HPCI system pump discharge line. The governor controls the pressure applied to the hydraulic operator of the turbine control valve which, in turn, controls the steam flow to the turbine. Hydraulic pressure is supplied for both the turbine control valve and the turbine stop valve by the DC powered oil pump during startup and then by the shaft driven hydraulic oil pump when the turbine reaches operating speed.

Upon receipt of an initiation signal, the auxiliary oil pump starts, providing hydraulic pressure for the turbine stop valve and turbine control valve hydraulic operator. As hydraulic oil pressure is developed, the turbine stop valve and the turbine control valve open and the turbine accelerates toward the speed setting of the control governor. As HPCI system flow increases, the flow signal adjusts the control governor setting so that design flow is maintained. The turbine is automatically shut down by tripping the turbine stop valve closed if any of the following conditions are detected:

(1) Turbine overspeed

(2) High turbine exhaust pressure

(3) Low pump suction pressure

(4) Reactor vessel high water level

(5) HPCI isolation signal from logic "A" or "B"

Turbine overspeed indicates a malfunction of the turbine control mechanism. High turbine exhaust pressure indicates a condition that threatens the physical integrity of the exhaust line. Low pump suction pressure warns that cavitation and lack of cooling can cause damage to the pump which could place it out of service. A turbine trip is initiated for those conditions so that if the causes of the abnormal conditions can be found and corrected, the system can be restored to service. The trip settings are selected far enough from normal values so that a spurious turbine trip is unlikely, but not so close that damage occurs before the turbine is shut down. Turbine overspeed is detected by a standard turbine overspeed mechanical-hydraulic device. Two pressure switches are used to detect high turbine exhaust pressure; either switch can initiate turbine shutdown. One pressure switch is used to detect low HPCI system pump suction pressure.

High water level in the reactor vessel indicates that the HPCI system has performed satisfactorily in providing makeup water to the reactor vessel. Further increase in level could result in HPCI system turbine damage caused by gross carryover of moisture. The reactor vessel high water level setting which trips the turbine is near the top of the steam separators and is sufficient to prevent gross moisture carryover to the turbine. Two level switches that sense differential pressure are arranged to require that both switches trip to initiate a turbine shutdown.

For both a manual and automatic initiation, the HPCI system logic provides for automatic cycling of HPCI operation from a high water level tripped condition to a restart upon again reaching low water level. This action is afforded through the absence of a latch (seal-in) in the turbine trip logic, and a conditional (on low water level) latch in the high water level trip logic. Upon (again) returning to low water level, the latch high water level trip is cleared, thereby defeating the turbine tripped condition and re-establishing turbine operation.

The control scheme for the turbine auxiliary oil pump is shown in Dwg. M1-E41-65, Sh. 5. The controls are arranged for automatic or manual control. Upon receipt of an HPCI system initiation signal, the auxiliary oil pump starts and provides hydraulic pressure to open the turbine stop valve and the turbine control valve. As the turbine gains speed, the shaft-driven oil pump begins to supply hydraulic pressure. After about 1/2 minute during an automatic turbine startup, the pressure supplied by the shaft driven oil pump is sufficient, and the auxiliary oil pump automatically stops upon receipt of a high oil pressure signal. Should the shaft-driven oil pump malfunction, causing oil pressure to drop, the auxiliary oil pump restarts automatically.

Operation of the gland seal condenser components (gland seal condenser condensate pump (DC), gland seal condenser blower (DC), and gland seal condenser water level instrumentation) prevent out-leakage from the turbine shaft seals. Startup of this equipment is automatic, as shown in Dwg. M1-E41-65, Sh. 5. Failure of this equipment will not prevent the HPCI system from providing water to the reactor vessel.

7.3.1.1a.1.3.4 Logic and Sequencing

Either reactor vessel low water level or primary containment (drywell) high pressure can automatically start the HPCI system as indicated in Dwg. M1-E41-65, Sh. 1. A 3 sec. time delay in each logic division prevents inadvertent system isolations due to pressure spikes. Reactor vessel low water level is an indication that reactor coolant is being lost and that the fuel is in danger of being overheated. Primary containment high pressure is an indication that a breach of the nuclear system process barrier has occurred inside the drywell.

The scheme used for initiating the HPCI system is shown on Figure 7.3-6. One trip system logic actuates the trip system upon receipt of a low water level signal. The other actuates upon receipt of a high drywell pressure signal. Either trip system logic can start the HPCI system. The HPCI system is powered by DC buses.

Instrument functions, type, range and number of channels provided for the HPCI system controls and instrumentation are listed in Table 7.3-1. The reactor vessel low water level setting for HPCI system initiation is selected high enough above the active fuel to start the HPCI system in time both to prevent excessive fuel cladding temperatures and to prevent more than a small fraction of the core from reaching the temperature at which gross fuel failure occurs. The water level setting is sufficiently below normal levels such that spurious HPCI system startups are avoided. The primary containment high pressure setting is selected to be as low as possible without inducing spurious HPCI system startup.

7.3.1.1a.1.3.5 Bypasses and Interlocks

To prevent the turbine pump from being damaged by overheating at reduced HPCI pump discharge flow, a pump discharge bypass is provided to route the water being discharged from the pump to the suppression pool. The bypass is controlled by an automatic, DC motor operated valve whose control scheme is shown in Dwg. M1-E41-65, Sh. 4. At high HPCI flow, the valve is closed and at low flow, the valve is opened. Flow switches that measure the pressure difference across a flow element in the HPCI pump discharge pipeline provide the signals used for flow indication.
To prevent the HPCI steam supply pipeline from filling up with water and cooling, a drain pot, steamline drain, and appropriate valves are provided in a drain pipeline arrangement just upstream of the turbine supply valve. The control scheme is shown in Dwg. M1-E41-65, Sh. 2. The controls position valves so that during normal operation steamline drainage is routed to the main condenser. Upon receipt of a HPCI initiation signal, the drainage path is isolated. The water level in the steamline drain pot is controlled by a level switch and air operated valve.

During test operation, the HPCI pump discharge is routed to the condensate storage tank. Two DC motor-operated valves are installed in the pump discharge to the condensate storage tank pipeline. The piping arrangement is shown in Dwgs. M-155, Sh. 1 and M-156, Sh. 1. The control scheme for the two valves is shown in Dwg. M1-E41-65, Sh. 4. Upon receipt of an HPCI system initiation signal, the two valves close and remain closed except for the conditions discussed in Section 6.3.4.2.1. The valves are interlocked closed if the suppression pool suction valve is not fully closed. Indications pertinent to the operation and condition of the HPCI system are available to the main control room operator as shown in Dwgs. **M-155, Sh. 1**, M-156, Sh. 1 and **M1-E41-65, Sh. 4.**

7.3.1.1a.1.3.6 Redundancy and Diversity

The HPCI system is actuated either by reactor vessel low water level or by primary containment high pressure. Both of these conditions could result from a LOCA. The redundancy of the HPCI system initiating circuits is consistent with the design of the HPCI system.

7.3.1.1a.1.3.7 Actuated Devices

The HPCI actuated devices are automatically controlled by logic or manually by switches in the main control room. Motor-operated valves are provided with appropriate limit or torque switches to turn off the motors when the full open or full closed positions are reached. Valves that are automatically closed on isolation or turbine trip signals are equipped with remote manual reset devices, so that they cannot be reopened without operator action. All essential HPCI system controls operate independent of AC power.

To assure that the HPCI system can be brought to design flow rate within 30 seconds from the receipt of the initiation signal, the following maximum operating times for essential HPCI system valves are provided by the valve operation mechanisms:

(1)	HPCI system turbine steam supply valve	20 seconds
(2)	HPCI system pump discharge valves	20 seconds
(3)	HPCI system pump minimum flow bypass valve	10 seconds

The operating time is the time required for the valve to travel from the fully closed to the fully open position or vice versa. Because the two HPCI system steam supply line isolation valves are normally open and because they are intended to isolate the HPCI system steamline in the event of a break in that line, the operating time requirements for them are based on isolation specifications. These are described in Subsection 7.3.1.1a.2. A normally closed DC motor-operated isolation valve is located in the turbine steam supply line just upstream of the turbine stop valve. The control scheme for this valve is shown in Dwg. M1-E41-65, Sh. 5. Upon receipt of an HPCI system initiation signal, this valve opens and remains open until closed by operator action from the main control room.

Two normally open isolation valves are provided in the steam supply line to the turbine. The valve inside the drywell is controlled by an AC motor. The valve outside the drywell is controlled by a DC motor. The control diagram is shown in Dwg. M1-E41-65, Sh. 2. The valves close automatically upon receipt of an HPCI signal. An isolation signal results from HPCI steam line high differential pressure (flow), HPCI turbine exhaust diaphragm high pressure, low reactor vessel pressure (low steam supply to turbine), or high temperature around the steamline. The isolation signal resulting from steam line high differential pressure incorporates a time delay to prevent inadvertent isolation due to transient events. The instrumentation for isolation is described in Subsection 7.3.1.1a.2.

Two pump suction valves are provided in the HPCI system. One valve provides pump suction from the condensate storage tank; the other one provides suction from the suppression chamber. The condensate storage tank is the preferred source. Both valves are operated by DC motors. The control arrangement is shown in Dwgs. M1-E41-65, Sh. 4 and M1-E41-65, Sh. 2. Although the condensate storage tank suction valve is normally open, an HPCI system initiation signal opens it if it is closed and the suppression pool suction valve is not full open. If the water level in the condensate storage tank falls below a preselected level, during HPCI operation, an automatic suction transfer is initiated. The suppression chamber suction valve receives a signal to open and in parallel, the condensate storage tank suction valves receives a signal to close to complete the transfer. Two level switches are used to detect the condensate storage tank low water level condition. Either switch can initiate the automatic suction transfer from the condensate storage tank to the suppression chamber. If open, the suppression chamber suction valve automatically closes upon receipt of the signals that initiate HPCI system steamline isolation.

Two level switches monitor the suppression chamber water level and provide high level alarms.

Two DC motor-operated HPCI system pump discharge valves in the pump discharge line are provided. The control schemes for these two valves are shown in Dwg. M1-E41-65, Sh. 4. Both valves are arranged to open upon receipt of HPCI system initiation signals. The outboard valve remains open upon receipt of a turbine trip signal until closed by operator action in the main control room.

To prevent damage by overheating at reduced HPCI system pump flow, a pump discharge minimum flow bypass is provided. The bypass is controlled by an automatic, DC motor-operated valve whose control scheme is shown in Dwg. M1-E41-65, Sh. 2. At HPCI system high flow, the valve is closed; at low flow, the valve is opened. Flow switches that measure the pressure difference across a flow element in the HPCI system pump discharge line provide the signals used for flow indication. There is also an interlock provided to shut the minimum flow bypass whenever the turbine is tripped. This is necessary to prevent drainage of the condensate storage tank into the suppression pool.

To prevent the HPCI system steam supply line from filling up with water and cooling, a drain pot, steamline drain, and appropriate valves are provided in a drain line arrangement just upstream of the turbine supply valve. The control scheme is shown in Dwgs. M1-E41-65, Sh. 2 and M1-E41-65, Sh. 3. The controls position valves so that during normal operation steamline drainage is routed to the main condenser. Upon receipt of an HPCI system initiation signal, the drainage path is isolated. The water level in the steamline drain pot is controlled by a level switch and air operated valve.

During test operation, the HPCI system pump discharge is routed to the condensate storage tank. The DC motor-operated valves are installed in the pump discharge test lines. The piping arrangement is shown in Dwgs. M-155, Sh. 1 and M-156, Sh. 1. The control scheme for the valves is shown in Dwg. M1-E41-65, Sh. 4. Upon receipt of an HPCI system initiation signal, the valves close and remain closed except for the conditions discussed in Section 6.3.4.2.1. The valves are interlocked closed if the suppression chamber suction valve is not fully closed. Indications pertinent to the operation and condition of the HPCI system are available to the plant operator as shown on Dwgs. **M-155, Sh. 1**, M-156, Sh. 1, **M1-E41-65, Sh. 1**, M1-E41-65, Sh. 2, **M1-E41-65, Sh. 3**, M1-E41-65, Sh. 4, and **M1-E41-65, Sh. 5**.

7.3.1.1a.1.3.8 Separation

The HPCI system is a Division II system. The system equipment is part of Division II except that the initiation sensors are from Division I and Division II in order to develop the one-out-of-two twice logic. Additionally the system has Division I and Division II isolation logic and controls. Relay coil to contact isolation is used to assure separation between the divisions. The HPCI system is functionally redundant to the ADS and the low pressure core cooling system (ADS and low pressure ECCS systems have redundant functions in Division I and II).

7.3.1.1a.1.3.9 Testability

The HPCI system is designed to be completely testable during reactor operation. Systems providing core cooling water are arranged with bypass valves so that pumps may be operated at design flow. Control design is such that the system automatically returns from the test to the operating mode if system initiation is required except for the conditions discussed in Section 6.3.4.2.1. Controls and instrumentation are designed to establish that the following functions are met.

(1) Each instrument channel functions independently of all others.

(2) Sensing devices will respond to process variables and provide channel trips at correct values.

(3) Sensors and associated instrument channels will respond to both steady-state and transient changes in the process variable within specified accuracy and time limitations, and will provide channel trips at correct values even when affected by process variations that may extend grossly beyond the expected trip setpoint.

(4) Paralleled circuit elements can perform their intended function independently.

(5) Series circuit elements are free from shorts that can abrogate their function.

(6) Redundant instrument or logic channels are free from interconnecting shorts that could violate independence if a single malfunction should occur.

(7) No element of the system is omitted from the test if it can impair system operability in any way. If the test is done in parts, then the parts must overlap sufficiently to ensure operability of the entire system.

(8) Each monitoring alarm or indication function is operable.

The HPCI system is provided with a test jack so that the reactor low water level or drywell high pressure one-out-of-two twice circuits can be tested. Completeness of tests can be assured if all instrument channels are tested, actuating one instrument channel at a time. Insertion of the test plug at the logic relay panel is indicated in the control room.

7.3.1.1a.1.3.10 Environmental Considerations

The only HPCI system control component located inside the primary containment that must remain functional in the environment resulting from a LOCA is the control mechanism for the inboard isolation valve on the HPCI system turbine steamline. The environmental capabilities of this valve are discussed in Subsection 7.3.1.1a.2. The HPCI system control and instrumentation equipment located outside the primary containment is selected in consideration of the normal and accident environments in which it must operate. These conditions are discussed in Section 3.11.

7.3.1.1a.1.3.11 Operational Considerations

7.3.1.1a.1.3.11.1 General Information

The HPCI system is not required for normal operations. Under the abnormal or accident conditions when it is required, initiation and control are provided automatically for at least 10 min. After that time, operator action may be required to sustain core cooling. The HPCI system may also be used for reactor pressure control when the MSIVs are closed. This mode of operation may only be used when it has been determined that HPCI is not required for core cooling.

7.3.1.1a.1.3.11.2 Reactor Operator Information

Indications pertinent to the operation and condition of the HPCI system are available to the main control room operator, as shown in Dwgs. **M-155, Sh. 1**, M-156, Sh. 1, **M1-E41-65, Sh. 1**, M1-E41-65, Sh. 2, **M1-E41-65, Sh. 3**, M1-E41-65, Sh. 4, and **M1-E41-65, Sh. 5**.

7.3.1.1a.1.3.11.3 Setpoints

Refer to the Technical Requirements Manual for safety trip setpoints; and the plant Technical Specifications for the Allowable Values.

7.3.1.1a.1.4 Automatic Depressurization System (ADS) - Instrumentation and Controls

7.3.1.1a.1.4.1 System Identification

The automatic depressurization system (ADS) has six automatically controlled safety/relief valves that are installed on the main steamlines inside the primary containment. These six valves perform both the ADS and the SRV function. The valves are dual purpose in that they will relieve pressure by normal mechanical action or by automatic action of an electric-pneumatic control system. The relief by normal mechanical action is intended to prevent overpressurization of the reactor vessel. The depressurization by automatic action of the control system is intended to reduce reactor vessel pressure during a LOCA in which the HPCI system is not available so that the CS system or LPCI system can inject water into the reactor vessel. The instrumentation and controls for one of these safety/relief valves are discussed. The remaining five safety/relief valves equipped for automatic depressurization are identical. Ten additional safety/relief valves providing only the SRV function are discussed in Subsection 7.7.1.12.

7.3.1.1a.1.4.2 Equipment Design

The control system consists of drywell pressure and reactor water level sensors arranged in trip systems that control two solenoid-operated pilot air valves (one for each ADS system) for each safety relief valve. Each of these two air valves controls pneumatic pressure for safety relief valves actuation. (A third solenoid-operated pilot air valve with each safety relief valve is used for the Relief Valve function. See Subsection 7.7.1.12 for details of Relief Valve control.) An accumulator is included with the control equipment to store pneumatic energy for actuation of the ADS piston type pneumatic actuator via the solenoid valves following failure of the pneumatic supply. The accumulator is sized to provide one ADS safety/relief valve actuation peak calculated drywell pressure or two ADS actuations at 70% of peak calculated drywell pressure. Additional design information is provided in section 5.2.2.4. Cables from the sensors lead to the control structure where the logic arrangements are formed in cabinets. The electrical control circuitry is powered by DC from the plant batteries. The power supplies for the redundant control circuits are selected and arranged to maintain tripping ability in the event of an electrical power circuit failure. Electrical elements in the control system energized to cause opening of the safety/relief valve.

7.3.1.1a.1.4.3 Initiating Circuits

The pressure and level switches used to initiate one ADS logic are separated from those used to initiate the other logic on the same ADS valve. Reactor vessel low water level is detected by six switches that measure differential pressure. Primary containment high pressure is detected by four pressure switches, which are located outside the primary containment and inside the reactor building. The level instruments are piped individually so that an instrument pipeline break will not inadvertently initiate auto blowdown. The primary containment high pressure signals are arranged to seal into the control circuitry; they must be manually reset to clear.

Two separate time delays are used in each ADS logic. The ADS Logic delay is long enough that the HPCI system has time to operate, yet not so long that the LPCI and CS systems are unable to adequately cool the fuel if the HPCI system fails to start. An alarm in the main control room is annunciated when either of the ADS Logic timers is timing. Resetting the ADS initiating signals recycles the timers. An eight (8) minute time delay is provided in each trip system so that the ADS trip logic will initiate on RPV Low Low Low Level 1 (Drywell Pressure Bypass Timer) after the 8 minute time delay even if high drywell pressure is not present. The remaining trip logic must be satisfied in order to actuate either division of ADS. In addition, a manual inhibit switch is installed to permit overriding ADS actuation in the event that the actuation signals are due to an ATWS rather than a LOCA.

7.3.1.1a.1.4.4 Logic and Sequencing

Three initiation signals are used for the ADS; namely, reactor vessel low water level, drywell high pressure, and RHR and/or CS pumps running. All signals must be present to cause the safety/relief valves to open, as shown in Figure 7.3-5. Reactor vessel low water level indicates that the fuel is in danger of becoming uncovered. The second (lower) low water level initiates the ADS. Primary containment high pressure indicates a breach in the RCPB inside the drywell. A permissive signal indicating LPCI or CS pump discharge pressure is also required. Discharge pressure on any one of the RHR pumps or either pair of the CS pumps (A&C) or (B&D) is sufficient to give the permissive signal, which permits automatic depressurization when the LPCI and CS systems are operable.

After receipt of the initiation signals and after a delay provided by timers, each of the pilot gas solenoid valves is energized. This allows pneumatic pressure from the accumulator to act on the gas cylinder operator. The gas cylinder operator holds the relief valve open. Lights in the main control room indicate when the solenoid-operated pilot valves are energized to open a safety/relief valve.

Manual reset circuits are provided for the ADS initiation signals. By manually resetting the initiation signal the delay timers are recycled. The operator can use the reset pushbuttons to delay or prevent automatic opening of the relief valves if such delay or prevention is prudent.

Control switches are available in the main control room for each safety/relief valve associated with the ADS. The OPEN position is for manual safety/relief valve operation.

Two ADS logics trains are provided as shown in Dwg. M1-B21-92, Sh. 4. Division I sensors for low reactor water level and high drywell pressure initiate ADS A (logics A & C), and Division II sensors initiate ADS B (logics B & D). One of the two solenoid-operated pilot air valves associated with each safety relief valves is controlled by ADS A and the other is controlled by ADS B. The reactor vessel low water level initiation setting for the ADS is selected to depressurize the reactor vessel in time to allow adequate cooling of the fuel by the LPCI system or CS system following a LOCA in which the HPCI system fails to perform its function adequately. The primary containment high pressure setting is selected as low as possible without inducing spurious initiation of the automatic depressurization system. This provides timely depressurization of the reactor vessel if the HPCI system fails to start, or fails after it successfully starts following a LOCA.

Each LPCI and CS pump discharge line is monitored by pressure switches with setpoints selected to indicate that the pumps are running and capable of delivering water to the reactor vessel. The switches are arranged to provide a permissive to the initiation of ADS Division 1, logic A, when either of the RHR A or C pump is running or when the CS pump A is running. Initiation of the Division 1, logic C, occurs when either the RHR A or C pump is running or when the CS pump C is running. Division 2 ADS initiation is similar to the above except that RHR pump B and D, respectively. The setting is high enough to ensure that the pump will be delivering at near rated flow, yet not be so low as to provide an erroneous signal that the pump is running when it actually is not.

As discussed in Subsection 18.1.24.3, each of the 16 safety/relief valves are provided with an acoustic monitoring system to detect flow through the valve.

7.3.1.1a.1.4.5 Bypasses and Interlocks

It is possible for the operator to manually delay the depressurizing action by the trip system reset switches. This would reset the timers to zero seconds and prevent depressurization for another timer delay period. The operator would make this decision based on an assessment of other plant conditions. ADS is interlocked with the CS and RHR by means of pressure switches located on the discharge of these pumps. These are the "AC interlock." Although the "AC interlocks" are common to automatic and manual ADS initiation circuits, the independence of manual and automatic initiation is not compromised because each of the logics is duplicated (ADS A and ADS B) and for a failure of the ADS to occur both the AC interlocks would have to fail. At least one of the RHR pumps or one pair of the CS pumps must be capable of delivering water into the vessel. In addition, a manual inhibit switch is installed to permit overriding ADS actuation in the event that actuation signals are due to an ATWS rather than a LOCA.

7.3.1.1a.1.4.6 Redundancy and Diversity

The ADS, when CS or LPCI permissive signals are present, is initiated by high drywell pressure and low reactor vessel water level. The initiating circuits for each of these parameters are redundant, as verified by the circuit description of this section.

Instrument types functions, ranges and number of channels provided are listed in Table 7.3-2 according to system functions.

7.3.1.1a.1.4.7 Actuated Devices

All safety/relief valves in the ADS are equipped with remote manual switches so that the entire system can be operated manually as well as automatically. The valves will also relieve pressure by built-in mechanical action.

7.3.1.1a.1.4.8 Separation

ADS is a Division 1 (ADS A) and Division 2 (ADS B) system except that only one set of relief valves is supplied. Each relief valve can be actuated by either of two pilot solenoid valves supplying gas to the relief valve piston operators. One of the pilot solenoid valves is operated by trip system A and the other by trip system B. Logic relays, manual controls, and instrumentation are mounted so that Division l and Division 2 separation is maintained.

7.3.1.1a.1.4.9 Testability

The ADS has two trip systems and either one can initiate automatic depressurization. Each trip system has two trip logics, both of which must trip to initiate ADS. Four test jacks are provided, one in each trip logic. To prevent spurious actuation of the ADS during testing, only one trip logic should be actuated at a time. An alarm is provided if a test plug is inserted in both trip logics. Operation of the test plug switch along with actuation of the ADS reactor level interlock and with the RHR or CS pump running, will close one of the two series relay contacts in the valve solenoid circuit. This will cause a panel light to come on indicating proper trip logic operation and also continuity of the solenoid electrical circuit. Testing of the other trip logic and trip system is similar. Annunciation is provided in the main control room whenever a test plug is inserted in a jack to indicate to the reactor operator that the ADS is in a test status. Testing of the one division does not interfere with automatic operation of the redundant division if required by an initiation signal.

7.3.1.1a.1.4.10 Environmental Considerations

The signal cables, solenoid valves, and safety/relief valve operators are the only control and instrumentation equipment for the ADS located inside the primary containment. These items will operate in the most severe environment resulting from a LOCA. Gamma and neutron radiation have been considered in the selection of these items. Equipment located outside the primary containment will also operate in its normal and accident environments. See Section 3.11.

7.3.1.1a.1.4.11 Operational Considerations

7.3.1.1a.1.4.11.1 General Information

The instrumentation and controls of the ADS are not required for normal plant operations. When automatic depressurization is required, it will be initiated automatically by the circuits described in this section.

7.3.1.1a.1.4.11.2 Reactor Operator Information

A temperature element is installed on the safety/relief valve discharge piping several feet from the valve body. The temperature element is connected to a multi-point recorder in the back row panels of the main control room to provide a means of detecting safety/relief valve leakage during plant operation. When the temperature in any safety/relief valve discharge pipeline exceeds a preset value, an alarm is sounded in the main control room. This alarm setting is high enough above normal rated power temperatures to avoid spurious alarms, yet low enough to give early indication of safety/relief valve leakage.

As discussed in Subsection 18.1.24.3, each of the 16 safety/relief valves are provided with an acoustic monitoring system to detect flow through the valve.

7.3.1.1a.1.4.11.3 Setpoints

Refer to the Technical Requirements Manual for safety trip setpoints; and the plant Technical Specifications for the Allowable Values.

7.3.1.1a.1.5 Core Spray (CS) System - Instrumentation and Controls

7.3.1.1a.1.5.1 System Identification

The CS system consists of two independent spray loops as illustrated in Dwg. M-152, Sh. 1. Each loop is capable of supplying cooling water to the reactor vessel to cool the core following a LOCA.

7.3.1.1a.1.5.2 Equipment Design

The two CS loops are physically and electrically separated so that no single physical event makes both loops inoperable. Each loop includes two AC motor-driven pumps, appropriate valves, and the piping to route water from the suppression pool to the reactor vessel. The controls and instrumentation for the CS system includes the sensors, relays, wiring, and valve operating mechanisms used to start, operate, and test the system. Except for the testable check valve in each spray loop, which is inside the primary containment, the sensors and valve closing mechanisms for the CS system are located in the reactor building. Testable check valves are described in Chapter 6. Cables from the sensors are routed to the control structure where the control circuitry is assembled in electrical panels. Each CS loop is powered from a different AC bus which is capable of receiving standby power. The power supply for automatic valves in each loop is the same as that used for the CS pumps in that loop. Control power for each of the CS loops come from separate DC buses. The electrical equipment in the control structure for one core spray loop is isolated from that used for the other loop.

7.3.1.1a.1.5.3 Initiating Circuits

Primary containment pressure is monitored by four non-indicating pressure switches mounted on instrument racks outside the primary containment, but inside the reactor building. Cables are routed from the switches to the relay logic cabinets. Figure 7.3-5 shows the initiating logic typical for each CS loop. Each drywell high pressure trip channel provides an input into the appropriate trip logic shown in Figure 7.3-5. Pipes that terminate in the reactor building allow the switches to communicate with the drywell interior. Two diverse automatic initiations are provided for each CS loop: 1) Reactor Vessel Low Water Level; or, 2) Drywell High Pressure coincident with Low Reactor Vessel Pressure. Each low reactor vessel pressure switch is electrically connected in series with a high drywell pressure switch so that high drywell pressure alone cannot initiate the CS automatic functions in a one-out-of-two-twice circuit arrangement as shown by Figure 7.3-5. Contacts from the primary containment high pressure signal relays are also used in the HPCI system. Reactor vessel low water level initiation signal uses low level switches as described for the HPCI system. A manual system initiation is also included.

7.3.1.1a.1.5.4 Logic and Sequencing

The control scheme for the CS system is illustrated in Dwgs. M1-E21-3, Sh. 1, M1-E21-3, Sh. 2, and M1-E21-3, Sh. 3. The overall operation of the system following the receipt of an initiating signal and required permissive signal is as follows:

(1) Test bypass valves are closed and interlocked to prevent opening.

(2) If normal AC power is available, the CS pumps in both spray loops start after a 15 Second delay.

(3) If normal AC power is not available, the CS pumps in both spray loops start 10.5 seconds after standby power becomes available for loading.

(4) When reactor vessel pressure drops to a preselected value, valves open in the pump discharge lines allowing water to be sprayed over the core.

(5) When sufficient pump discharge flow is indicated, the pump low flow bypass valves shut directing full flow into the reactor vessel.

The initiation logic for one CS loop is depicted in Figure 7.3-5 in a one-out-of-two-twice network using level and pressure sensors. The initiation signal will be generated when:

(1) both level sensors are tripped, or

(2) two high drywell pressure sensors and two low reactor vessel pressure sensors are tripped, or

(3) two of the four possible combinations of one level sensor and one high drywell pressure sensor together with its associated low reactor vessel pressure sensor.

Once an initiation signal is received by the CS control circuitry, the signal is sealed in until manually reset. The seal-in feature is shown in Dwg. M1-E21-3, Sh. 1.

Reactor vessel low water level indicates that the core is in danger of being overheated due to the loss of coolant. Drywell high pressure indicates that a breach of the RCPB has occurred inside the drywell. The reactor vessel low water level and primary containment high pressure settings and the instruments that provide the initiating signals are selected and arranged so as to assure adequate cooling for the LOCA without inducing spurious system startups.

7.3.1.1a.1.5.5 Bypasses and Interlocks

SSES is designed to withstand a LOCA simultaneous with a loss of offsite power assuming the most severe active single failure. This means the plant must withstand a LOCA on one unit combined with a false or spurious LOCA signal on the non-accident unit. Interlocks between the Unit 1 and Unit 2 Core Spray Systems prevent electrical system overloads by limiting the number of CS pumps that can start because of a LOCA/False LOCA signal.

Any time a LOCA signal (low reactor water level or high drywell pressure combined with low reactor pressure) is generated in Unit 1, a trip signal is sent to Unit 2 CS pumps A and C. Similarly, if a LOCA signal is generated in Unit 2, Unit 1 CS pumps B and D receive a trip signal. The pumps receiving a trip signal are also prevented from starting. Therefore, a LOCA in one unit and a false LOCA signal in non-accident unit will start A and C CS pumps on Unit 1 and the B and D CS pumps on Unit 2. A single LOCA signal on either unit will start all four CS pumps of the affected unit and will trip and prevent operation of two CS pumps of the unaffected unit.

To prevent pump overheating at reduced CS pump flow, a pump discharge minimum flow bypass is provided from each loop. The bypass routes the discharge from the pump in a loop back to the suppression pool. The bypass is controlled by an automatic motor-operated valve whose control scheme is shown in Dwg. M1-E21-3, Sh. 2. At CS flow above setpoint, the bypass valve is closed. At low flow, and with at least one pump in the loop running, the bypass valve is opened. A flow switch measures the flow in each of the two loops. During test operation, each CS loop discharge can be routed to the suppression pool. Motor-operated valves are installed in the test lines. The piping arrangement is shown in Dwg. M1-152, Sh. 1. The control scheme for the two valves is shown in Dwg. M1-E21-3, Sh. 2. On receipt of a CS initiation signal, the bypass valve closes and remains closed.

To permit opening of the CS inboard injection valves in the event of a loss of the CS logics or failure of the low reactor pressure signals, a capability has been provided in the injection valve control circuit to bypass the low reactor pressure permissive. Operation of this bypass switch in conjunction with placing the injection valve control switch in the OPEN position will permit CS injection if reactor pressure is below the CS pump discharge design pressure. Operation of the bypass switch provides an input to the CS bypass indication system (BIS) display panel.

7.3.1.1a.1.5.6 Redundancy and Diversity

The CS is actuated by either reactor vessel low water level and/or drywell high pressure coincident with reactor low pressure permissive. The redundancy and diversity inherent in the CS one-out-of-two-twice initiation logic are described in Subsection 7.3.1.1a.1.5.4. Each pair of CS pumps is backed up by RHR (LPCI Mode) within ECCS Division 1.

7.3.1.1a.1.5.7 Actuated Devices

The control arrangements for the CS pumps are shown in Dwg. M1-E21-3, Sh. 1. The circuitry provides for detection of normal power available, so that all pumps are automatically started in sequence. Each pump can be manually controlled by a main control room remote switch, or the automatic control system. A pressure transducer on the discharge line from each set of CS pumps provides a signal in the main control room to indicate the successful startup of the pumps. If a CS initiation signal is received when normal AC power is not available, the CS pumps start 10.5 seconds after AC power is available for loading. The CS pump motors are provided with overload and undervoltage protection. Overload relays are applied so as to maintain power as long as possible without immediate damage to the motors or standby power system.

Undervoltage trips are provided with time delays to permit power transfer from one startup transformer to the other.

Flow-measuring instrumentation is provided in the discharge line of each set of core spray pumps. The instrumentation provides flow indication in the main control room.

Except where specified otherwise, the remainder of the description of the CS system refers to one CS loop. The second CS loop is identical. The control arrangements for the various automatic valves in the CS system are indicated in Dwgs. M1-E21-3, Sh. 1, M1-E21-3, Sh. 2, and M1-E21-3, Sh. 3. All motor-operated valves are equipped with limit and torque switches to turn off the valve motor when the valve reaches the limits of movement and provide control room indication for valve position. Each automatic valve can be operated from the main control room. Valve motors are protected by overload devices during test only.

Upon receipt of an initiation signal, the test bypass valve is interlocked shut. The core spray pump discharge valves are automatically opened when reactor vessel pressure drops to a preselected value; the setting is selected low enough so that the CS system is not over-pressurized, yet high enough to open the valves in time to provide adequate cooling for the fuel. Four pressure switches in each loop are used to monitor reactor vessel pressure. Contacts from four switches are wired in a one-out-of-two/twice configuration and permits valve opening any time reactor pressure is below the switches setpoint. The full stroke operating times of the motor-operated valves are selected to be rapid enough to assure proper delivery of water to the reactor vessel in a DBA.

A flow switch on the discharge of each set of pumps provide a signal to operate the minimum flow bypass line valve for each pump set. When the flow reaches the value required to prevent pump overheating, the valves close and all flow is directed into the sparger.

7.3.1.1a.1.5.8 Separation

The CS System consists of four CS Pumps powered from four independent 4.16kV buses. Each CS Pump (A through D) is powered from its respective 4.16 kV bus (A through D). Class 1E 125 VDC Bus A (Channel A) provides logic control power to the Division I relay logic. The Division I relay logic provides a start signal to CS Pumps A and C. Class 1E 125 VDC Bus B (Channel B) provides logic control power to the Division II relay logic. Division II relay logic provides a start signal to CS Pumps B and D. The two divisionalized logics are located in separate panels. Each CS Pump (A through D) obtains its breaker control power from its respective Class 1E 125 VDC Bus (A through D).

7.3.1.1a.1.5.9 Testability

The CS system is provided with a test jack in both logics A and B. The reactor low water level or high drywell pressure one-out-of-two-twice circuit can be completely tested by actuating one instrument channel at a time. Completeness of tests can be assured if all instrument channels are tested. Insertion of the test plug at either logic relay panel is indicated in the control room.

7.3.1.1a.1.5.10 Environmental Considerations

There are no control and instrumentation components for the CS system that are located inside the primary containment that must operate in the environment resulting from a LOCA. All components of the CS system that are required for system operation are outside the drywell and are selected in consideration of the normal and accident environments in which they must operate.

7.3.1.1a.1.5.11 Operational Considerations

7.3.1.1a.1.5.11.1 General Information

The CS system is not required for normal plant operation. When it is required for accident conditions, it will be initiated automatically by the circuitry described in this section. No operator action will be required for at least 20 minutes following initiation.

7.3.1.1a.1.5.11.2 Reactor Operator Information

Core Spray System pressure between the two pump discharge valves is monitored by a pressure switch to permit detection of leakage from the RCPB into the CS system outside the primary containment. A detection system is also provided to continuously confirm the integrity of the core spray piping between the inside of the reactor vessel and the core shroud. A differential pressure switch measures the pressure difference between the top of the core support plate and the inside of the CS sparger pipe just outside the reactor vessel. If the CS sparger piping is sound, this pressure difference will be the pressure drop across the core resulting from interchannel leakage. If integrity is lost, this pressure drop will include the steam separator pressure drop. An increase in the normal pressure drop initiates an alarm in the main control room. Pressure in each core spray pump suction line is monitored by a local pressure indicator to determine suction head and pump performance. Pressure in the discharge line of the pair of pumps is monitored by a pressure indicator in the control room to determine pump performance.

7.3.1.1a.1.5.11.3 Setpoints

Refer to the Technical Requirements Manual for safety trip setpoints; and the plant Technical Specifications for the Allowable Values.

7.3.1.1a.1.6 Low Pressure Coolant Injection (LPCI) System - Instrumentation and Controls

7.3.1.1a.1.6.1 System Identification

Low pressure coolant injection (LPCI) is an operating mode of the residual heat removal system (RHR). The RHR system and its operating modes are discussed in Chapters 5 and 6. Because the LPCI system is designed to provide water to the reactor vessel following the LOCA, the controls and instrumentation for it are discussed here.

7.3.1.1a.1.6.2 Equipment Design

Dwgs. **M-151, Sh. 1**, M-151, Sh. 2, and **M-151, Sh. 3** show the entire RHR system, including the equipment used for LPCI operation. Control and instrumentation for the following equipment is essential:

(1) Four RHR main system pumps

(2) Pump suction valves

(3) LPCI injection valves

(4) Vessel level switches

(5) Drywell pressure switches

(6) Vessel pressure switches.

The instrumentation for LPCI operation controls other valves in the RHR. This ensures that the water pumped from the suppression pool by the main system pumps is routed directly to the reactor. These interlocking features are described in this subsection. LPCI operation uses two identical pump loops, each loop with two pumps in parallel. The two loops are arranged to discharge water into different reactor recirculation loops. A cross-connection containing two keylocked normally closed valves in series exists between the pump discharge lines of each loop. Dwgs. **M-151, Sh. 1**, M-151, Sh. 2, and **M-151, Sh. 3** show the locations of instruments, control equipment, and LPCI components. Except for the RHR testable check valves and the reactor recirculation loop valves, the components pertinent to LPCI operation are located outside the primary containment.

Power for the main system pumps is supplied from AC buses that can receive standby AC power. Motive power for the injection valves (one in each loop) used during LPCI operation comes from a bus which can be automatically connected to alternate standby power sources. Refer to Subsection 8.3.1.3.5 for discussion of this bus. Control power for the LPCI components, except valves, comes from the DC buses. Redundant trip systems are powered from different DC buses.

LPCI is arranged for automatic operation and for remote manual operation from the main control room. The equipment provided for manual operation of the system allows the operator to take action independent of the automatic controls in the event of a LOCA.

7.3.1.1a.1.6.3 Initiating Circuits

Two diverse automatic initiation signals are provided for the RHR (LPCI) pumps; namely, reactor vessel low water level (Level 1) or drywell high pressure coincident with low reactor pressure. The low reactor pressure permissive is provided to prevent a high drywell pressure condition which is not accompanied by low reactor pressure, i.e., a false LOCA signal, from disabling two RHR pumps on the other unit. (This would otherwise occur due to the interlocks between the Unit 1 and Unit 2 RHR pumps as discussed in Subsection 7.3.1.1a.1.6.5.) After system initiation, the LPCI injection valve is opened when the low reactor pressure permissive is present.

The RHR (LPCI) pump initiation logic is cross connected between divisions; i.e., a start signal from either division will start all four pumps. This feature is essential to ensuring that the ECCS equipment specified in Table 6.3-5 will be available in the event of a discharge side break and the single failure of a DC power source. The cross connection logic ensures that the RHR pump assumed to remain is available, and this pump is necessary to meet minimum ECCS criteria (see Subsection 6.3.3.2).

The low water level or high drywell pressure initiation signal for the LPCI system is a one-out-of-two-twice circuit arrangement as described in Subsection 7.3.1.1a.1.5.3 for the CS system. A manual system initiation is provided by armed pushbutton switches show as Item (6) RHR A/RHR C and Item (7) RHR B/RHR D of Subsection 7.3.2a.1.2.1.9.

Dwgs. M-151, Sh. 1, M-151, Sh. 2, and M-151, Sh. 3 can be used to determine the locations of sensors and Dwgs. **M1-E11-51, Sh. 1**, M1-E11-51, Sh. 2, **M1-E11-51, Sh. 3**, M1-E11-51, Sh. 4, and **M1-E11-51, Sh. 5** can be used to determine the functional use of each sensor in the control circuitry for LPCI components. Instrument function, type, ranges and number of channels provided are given in Table 7.3-4.

7.3.1.1a.1.6.4 Logic and Sequencing

The overall LPCI operating sequence following the receipt of an initiation signal is as follows:

(1) The valves in the suction paths from the suppression pool are kept open and require no automatic action to line up suction.

(2) If normal AC power is available, the A and B RHR pumps start immediately, taking suction from the suppression pool. The other two pumps start after a 7.5-second delay to limit the loading of the power sources. In the event the normal AC power is lost, standby power sources become available and all pumps start after a 3-second time delay.

(3) Valves used in other RHR modes are automatically positioned so the water pumped from the suppression pool is routed correctly.

(4) The LPCI injection valves automatically open when reactor pressure decreases to the setpoint.

(5) When reactor vessel pressure has dropped to a value at which the main system pumps are capable of injecting water into the recirculation loops, water is delivered to the reactor vessel via the recirculation loop until the vessel water level is adequate to provide core cooling and the RHR pumps are manually shut off.

When the RHR system is operating in the shutdown cooling mode below the pressure where LPCI is not required, receipt of an initiation signal will not automatically open the LPCI injection valves. The low water level signal, however, will isolate the shutdown cooling valves to prevent further loss of water; the CS system will operate to provide cooling makeup water.

7.3.1.1a.1.6.5 Bypasses and Interlocks

To protect the pumps from overheating at low flow rates, a minimum flow bypass pipeline is provided which routes water from the pump discharge to the suppression chamber, for each pair of pumps. A single motor-operated valve controls the conditions of each bypass line. The minimum flow bypass valve automatically opens upon sensing low flow in the discharge lines from both pumps of the associated pump pair. The valve automatically closes whenever the flow from the main system pumps is above the low flow setting. Flow indications are derived from flow switches that sense the pressure differential across a length of the pump discharge lines. Dwgs. M-151, Sh. 1, M-151, Sh. 2, and M-151, Sh. 3 show the location of the flow switches. One switch is used for each pair of pumps.

The valves that allow the diversion of water for containment cooling are automatically closed upon receipt of a low water level and/or high drywell pressure (LOCA) signal, or a system level manual initiation of the LPCI mode. The manual controls for these valves are interlocked so that opening the valves is possible only if there is no LOCA or manual initiation signal present. A keylock switch in the main control room allows a manual override of the LOCA interlock for containment cooling valve operation.

Interlocks are provided between Susquehanna Units 1 and 2 within the LPCI systems. The Unit 1 and Unit 2 RHR pumps are interlocked such that a Unit 1 and corresponding Unit 2 pump cannot operate at the same time. The interlock assures that the shared Emergency Power Supplies are not overloaded.

Additional interlocks are provided for the following conditions:

1. LOCA/false-LOCA - The interlocks stop and prevent the manual or automatic starting of one pump in each RHR Loop as follows: Unit 1 LOCA initiation logic stops RHR pumps A and B in Unit 2, similarly, Unit 2 LOCA initiation logic stops RHR Pumps C and D in Unit 1. The purpose of these interlocks is to assure that adequate core cooling pump capacity exists in the Unit with the actual LOCA.

2. LOCA in one Unit, Non-LOCA in the other Unit - The interlocks stop and prevent the manual or automatic starting of all four of the non-LOCA Unit's RHR pumps, thus assuring that all four RHR pumps on the LOCA unit will operate, providing adequate core cooling pump capacity in the unit with the LOCA. Analyses were performed on the non-LOCA Unit, assuming the following initial conditions one at a time:

    a. Normal power generation with or without suppression pool cooling.

    b. High Pressure, hot standby.

    c. Low pressure, hot standby.

    d. Cold shutdown with RPV head on.

    e. Cold shutdown with RPV head off.

In addition, the analysis assumed the RHR system was inoperable on the non-LOCA Unit for a period of twenty minutes. The non-LOCA unit response has been determined to be bounded by existing Chapter 15 events.

7.3.1.1a.1.6.6 Redundancy and Diversity

The LPCI system is redundant in that two separate loops are provided, with pumps A and C feeding into recirculation loop A, and pumps B and D feeding into recirculation loop B. Loops A and B are connected together by means of a cross header containing two series mounted valves which are keylocked closed and have their power removed except during cold shutdown. Failure of A or B logic would still allow two pumps to supply water to the reactor.

7.3.1.1a.1.6.7 Actuated Devices

The functional control arrangement for the RHR pumps is shown in Dwg. M1-E11-51, Sh. 1. When AC power is available, two of the RHR pumps start immediately, while the remaining two pumps start after a 7.5 second delay. The operator can manually control the pumps from the main control room, thus permitting the operator to use the pumps for other purposes, such as containment cooling. Two pressure switches are installed in each pump discharge pipeline to verify that the pumps are operating following an initiation signal. The pressure signal is used in the ADS to verify availability of low pressure core cooling. The pressure instruments are located upstream of the pump discharge check valves to prevent the operating pump discharge pressure from concealing a pump failure. The main system pump motors are provided with overload protection. The overload relays maintain power on the motors as long as possible without harming the motors or jeopardizing the emergency power system.

All automatic valves used in the LPCI function are equipped with remote manual test capability. The entire system can be operated from the main control room. Motor operated valves have limit switches to turn off the motors when the full open positions are reached and are torque seated in the closing direction. Valves that have vessel and containment isolation requirements are described in Subsection 7.3.1.1a.2.

The RHR pump suction valves from the suppression pool are normally open. To reposition the valves, a key lock switch must be turned in the main control room. On receipt of an LPCI system initiation signal, other RHR system valves are signaled to close, even though they may normally be closed, to ensure that the RHR pump discharge is correctly routed. The normally closed valves that provide suction from the recirculation loop during RHR shutdown cooling mode are signaled closed by the low water level signal.

A 'LOCA OVERRIDE' switch when manually operated cancels the LPCI open signal to the heat exchanger bypass valves. The signal override allows the operator to control the flow through the heat exchangers for other post-accident or ATWS conditions. Overriding the open signal does not cause the bypass valve to close.

7.3.1.1a.1.6.8 Separation

The LPCI System consists of four RHR Pumps powered from four independent 4.16 kV buses. Each RHR Pump (A through D) is powered from its respective 4.16 kV bus (A through D). Class 1E 125 VDC Bus A (Channel A) provides logic control power to the Division I relay logic. The Division I relay logic provides a start signal to all four RHR Pumps. Class 1E 125 VDC Bus B (Channel B) provides logic control power to the Division II relay logic. Division II relay logic also provides a start signal to all four RHR Pumps. The two divisionalized logics are located in separate panels. Each RHR Pump (A through D) obtains its breaker control power from its respective Class 1E 125 VDC Bus (A through D).

7.3.1.1a.1.6.9 Testability

The LPCI system is provided with test jacks in each logic. The reactor vessel low water level or high drywell pressure one-out-of-two-twice circuit can be tested by actuating one instrument channel at a time. Completeness of tests can be assured if all instrument channels are tested. The other test jacks are used in the logic to facilitate testings as required. Insertion of the test plug in any jack actuates an alarm in the main control room to indicate that the LPCI system is in test status and the system is inoperative.

7.3.1.1a.1.6.10 Environmental Considerations

The only control components pertinent to LPCI operation that are located inside the drywell are those controlling the gas-operated check valves on the injection lines. Other equipment, located outside the primary containment, is selected in consideration of the normal and accident environments in which it must operate (see Section 3.11).

7.3.1.1a.1.6.11 Operational Considerations

7.3.1.1a.1.6.11.1 General Information

The LPCI mode is not required for normal operation.

7.3.1.1a.1.6.11.2 Reactor Operator Information

Initiation of this mode is automatic and no operator action is required for at least 20 minutes following initiation. Under certain conditions, automatic opening of LPCI injection valves on low RW level is blocked. These conditions include: reactor pressure ≤135 psig and the RHR system is aligned for the shutdown cooling mode, RHR Reactor Pump suction from RPV valves HV-1F008 and HV-1F009 not fully closed, and an isolation signal exists. The operator may control the RHR system manually after initiation to use its capabilities in the other modes of the RHR system, if the core is being cooled by other ECCS. Temperature, flow, pressure, and valve position indications are available in the main control room for the operator to assess the IPCI system operation accurately. Valves have indications of full open, intermediate, and full closed positions. Pumps have indications for pump running and pump stopped. Alarm and indication devices are shown in Dwgs. **M-151, Sh. 1**, M-151, Sh. 2, **M-151, Sh. 3**, M1-E11-51, Sh. 1, **M1-E11-51, Sh. 2**, M1-E11-51, Sh. 3, **M1-E11-51, Sh. 4**, and M1-E11-51, Sh. 5.

7.3.1.1a.1.6.11.3 Setpoints

Refer to the Technical Requirements Manual for safety trip setpoints; and the plant Technical Specifications for the Allowable Values.

7.3.1.1a.2 Primary Containment and Reactor Vessel Isolation Control System – for NSSS Instrumentation and Controls

7.3.1.1a.2.1 System Identification

The PCRVICS includes the instrument channels, logics and actuation circuits that activate valve closing mechanisms associated with the valves, which, when closed, effect isolation of the primary containment or reactor vessel or both.

The PCRVICS include the following instrumentation and control subsystems:

(1) Reactor Vessel - Low Water Level

(2) Main Steamline - High Radiation

(3) Main Steamline Tunnel - High Temperature and Differential Temperature (high differential temperature isolation and isolation alarm function have been removed but equipment still remains in the field).

(4) Main Steamline - High Flow

(5) Main Turbine Inlet - Low Steam Pressure

(6) Drywell - High Pressure

(7) Reactor Water Cleanup System - High Differential Flow

(8) Reactor Water Cleanup System - Area - High Temperature and Differential Temperature (high differential temperature isolation and isolation alarm function has been removed but equipment still remains in the field).

(9) Main Steamline - Leak Detection

(10) Main Condenser - Vacuum Trip

(11) Reactor Water Cleanup System - High Flow

This system provides initiation to non-NSSS systems as follows:

(1) Containment Isolation (see Subsection 7.3.1.1b.1)

(2) Standby Gas Treatment System (see Subsection 7.3.1.1b.4)

(3) Reactor Building Isolation and HVAC Support System (see Subsection 7.3.1.1b.6)

The purpose of the system is to prevent the gross release of radioactive material in the event of a breach in the RCPB by automatically isolating the appropriate pipelines that penetrate the primary containment. The power generation objective of this system is to avoid spurious closure of particular isolation valves as a result of single failure. Identification of NSSS and non-NSSS valves closed by the PCRVICS is provided in Table 6.2-12.

7.3.1.1a.2.2 System Power Sources

Power for the system channels and logics of the isolation control system and main steamline isolation valves are supplied from the two electrical buses that supply the reactor protection system trip systems. Each bus has its own motor-generator set and can receive alternate power from the preferred power source. Each bus can be supplied from only one of its power sources at any given time. Motor-operated isolation valves receive power from emergency buses. Power for the operation of any two valves mounted series is supplied from separate or different sources. Inboard isolation valves are powered from the Division I AC power source. Outboard isolation valves use a Division II DC power source.

7.3.1.1a.2.3 System Equipment Design

Pipelines that penetrate the primary containment and drywell and directly communicate with the reactor vessel generally have two isolation valves, one inside the primary containment and one outside the primary containment. These automatic isolation valves are considered essential for protection against the gross release of radioactive material in the event of a breach in the RCPB.

Power cables run in raceways from the electrical source to each motor-operated isolation valve. Solenoid valve power goes from its source to the control devices for the valve. The main steamline isolation valve controls include pneumatic piping, and an accumulator for the gas operated valves as the emergency motive power source in addition to the springs. Pressure, temperature, and water level sensors are mounted on instrument racks or locally in either the secondary containment or the turbine building. The location of these sensors is shown on FSAR Dwgs:

J-2-4, Sh. 1	J-6-3, Sh. 1	J-6-4, Sh. 1	J-10-3, Sh. 1	J-11-4, Sh. 1
J-25-1, Sh. 1	J-25-3, Sh. 1	J-25-4, Sh. 1	J-26-2, Sh. 1	J-26-3, Sh. 1
J-26-4, Sh. 1	J-26-6, Sh. 1	J-26-12, Sh. 1	J-27-1, Sh. 1	J-27-2, Sh. 1
J-27-3, Sh. 1	J-27-4, Sh. 1	J-27-5, Sh. 1	J-27-6, Sh. 1	J-28-1, Sh. 1
J-28-2, Sh. 1	J-28-3, Sh. 1	J-28-4, Sh. 1	J-28-5, Sh. 1	J-28-6, Sh. 1
J-29-1, Sh. 1	J-29-3, Sh. 1	J-29-4, Sh. 1	and	J-29-5, Sh. 1

Valve position switches are mounted on motor and gas-operated valves. Switches are encased to protect them from environmental conditions. Cables from each sensor are routed in raceways to the control structure. All signals transmitted to the main control room are electrical; no piping from the reactor pressure coolant boundary penetrates the main control room. The sensor cables and power supply cables are routed to cabinets in the control or electrical equipment rooms, where the sensor signals and supplied power are arranged according to system logic requirements.

7.3.1.1a.2.4 System Initiating Circuits

During normal plant operation, the isolation control system sensors and trip controls that are essential to safety are energized. When abnormal conditions are sensed, contacts in the trip logic initiate isolation. Loss of both power supplies also initiates isolation.

Each main steamline isolation valve is fitted with two control solenoids. For any valve to close automatically, both of its solenoids must be deenergized. Each solenoid receives inputs from two logics; a signal from either can deenergize the solenoid.

For the main steamline isolation valve control, four instrument channels are provided for each measured variable. The four channels (A, B, C, and D) are independent and separate. One output of the Channels A and C logic actuators control one solenoid in both the inboard and outboard valves of all four main steamlines. One output of the Channels B and D logic actuators control the other solenoid in both inboard and outboard valves for all four main steamlines.

The main steamline drain valves and inboard valves close if two of the main steamline isolation logics are tripped, and the outboard valves close if the other two logics are tripped.

The reactor water cleanup system and RHR system isolation valves are each controlled by two logic circuits; one for the inboard valve and a second for the outboard valve.

7.3.1.1a.2.4.1 Isolation Functions and Settings

The isolation function, instrument type, range and number of channels provided of the PCRVICS are listed in Table 7.3-5. The functional control diagram Dwgs. **M1-B21-92, Sh. 1**, M1-B21-92, Sh. 2, **M1-B21-92, Sh. 3**, M1-B21-92, Sh. 4, **M1-B21-92, Sh. 5**, and M1-B21-92, Sh. 6 illustrate how these signals initiate closure of isolation valves.

7.3.1.1a.2.4.1.1 Reactor Vessel Low Water Level

7.3.1.1a.2.4.1.1.1 Subsystem Identification

A low water level in the reactor vessel could indicate that reactor coolant is being lost through a breach in the RCPB and that the core is in danger of becoming overheated as the reactor coolant inventory diminishes.

Reactor vessel low water level initiates closure of various valves. The closure of these valves is intended to isolate a breach in any of the pipelines in which the valves are contained, conserve reactor coolant by closing off process lines, or prevent the escape of radioactive materials from the primary containment through process lines that communicate with the primary containment interior.

Three reactor vessel low water level isolation trip settings are used to complete the isolation of the primary containment and the reactor vessel.

The first low water level setting (which is the RPS low water level scram setting, Low Level 3) is selected to initiate isolation at the earliest indication of a possible breach in the reactor coolant pressure boundary, yet far enough below normal operational levels to avoid spurious isolation. Isolation of the following pipelines is initiated when reactor vessel low water level falls to Level 3:

(1) RHR-Reactor Vessel head spray

(2) RHR shutdown cooling suction

(3) TIP guide tube

(4) Non-NSSS system isolation as described in Subsection 7.3.1.1b.

The second (and lower) reactor vessel low water level isolation setting (the same water level setting at which the RCIC system is placed in operation, Low, Low Level 2) is selected low enough to allow the removal of heat from the reactor for a predetermined time following the scram and high enough to complete isolation in time for ECCS operation in the event of a large break in the RCPB. Isolation of the following pipelines is initiated when the reactor vessel water level falls to Level 2:

(1) Reactor water sample line

(2) RWCU system suction

(3) Non-NSSS system isolation as described in Subsection 7.3.1.1b

The third (and lowest) reactor vessel low water level isolation setting (Low Low Low Level 1) is selected low enough to allow operation of those systems which may alleviate the effects of a LOCA inside of containment, yet high enough to allow isolation of those systems when an uncovered core may be imminent. Isolation of the following pipelines is initiated when the reactor vessel water level falls to Level 1:

(1) Main steamlines

(2) Main steamline drain

(3) RHR - Drywell Spray

(4) RHR - Suppression Pool Spray/Suppression Pool Cooling

(5) Core Spray Test Line

(6) Non-NSSS System isolation as described in Section 7.3.1.1b

Reactor vessel low water level signals are initiated from indicating type differential pressure switches. One contact on each of four redundant switches per trip system is used to indicate that water level has decreased to Low Level 3; one contact on each of four other redundant switches per trip system are used to indicate that water level has decreased to Low, Low Level 2 or low, low, low level 1 as required.

Three instrument lines, one common line above water level and one from each differential pressure switch to the below water level taps, are provided for each redundant pair of level switches. Each switch pair provides signals into one trip logic. There is a different trip logic for each switch pair. The three lines of each pair terminate outside the primary containment and inside the reactor building; they are physically separated from each other and tap off the reactor vessel at widely separated points. The reactor vessel low water level switches sense level from these pipes. This arrangement assures that no single physical event can prevent isolation, if required. Cables from the level sensors are routed to the control structure. Temperature equalization is used to increase the accuracy of the level measurements.

7.3.1.1a.2.4.1.1.2 Subsystem Power Supplies

For the power supplies for main steamline isolation valves and other isolation valves, see Figures 7.3-2 and 7.3-3, respectively.

7.3.1.1a.2.4.1.1.3 Subsystem Initiating Circuits

Four level sensing circuits monitor the reactor vessel water level. One level circuit is associated with each of four logic channels. Four level switches at two separate locations on the reactor vessel allow the earliest possible detection of reactor vessel low water level.

7.3.1.1a.2.4.1.1.4 Subsystem Logic and Sequencing

When a significant decrease in reactor water level is detected, trip signals are transmitted to the PCRVICS, which initiates closure of the main steamline isolation valves, main steamline drain valves, RHR process sampling valve, RHR discharge valve to radwaste, reactor water sample valve, and TIP system valves.

There are four instrumentation channels provided to assure that protective action occurs when required but prevents inadvertent isolation resulting from instrumentation malfunctions. The output trip signal of each instrumentation channel initiates a logic channel trip. Logic channel trips are combined as shown in Figures 7.3-2 and 7.3-3.

7.3.1.1a.2.4.1.1.5 Subsystem Redundancy and Diversity

Redundancy of trip initiation for each reactor vessel low water level setpoint is provided by four level switches installed at separate locations in secondary containment. Each trip system is powered from diverse and redundant power supplies.

Diversity to reactor vessel low water level (level 3) for pipe breaks inside the primary containment is provided by drywell high pressure. RHR leak detection instrumentation provide diversity to reactor vessel low water level for pipe breaks outside of primary containment. No diversity is provided for pipe breaks outside the primary containment for TIP guide tube isolation.

Diversity to reactor vessel low low water (Level 2) which results in isolation as indicated in Subsection 7.3.1.1a.2.4.1.1.1, for pipe breaks outside the primary containment, is provided by main steamline and RWCS leak detection instrumentation. No diversity is provided for breaks inside the primary containment.

7.3.1.1a.2.4.1.1.6 Subsystem Bypasses and Interlocks

The low water level (Level 1) initiation of the MSIVs (Div. 1) Control Logic "A" and Control Logic "C" can be manually bypassed from the Control Room following an ATWS event, or during beyond design basis conditions (e.g., Rapid Depressurization or Primary Containment Flooding). Bypassing of the low water level isolation signal interlock will not prevent MSIV closure since other diverse isolation signal interlocks are available.

Reactor vessel low water level trip has provisions to initiate the standby gas treatment system.

7.3.1.1a.2.4.1.1.7 Subsystem Testability

Testability is discussed in Subsections 7.3.2a.2.2.3.1.9 and 7.3.2a.2.2.3.1.10.

7.3.1.1a.2.4.1.2 Main Steamline High Radiation

7.3.1.1a.2.4.1.2.1 Subsystem Identification

High radiation in the vicinity of the main steamlines could indicate a gross release of fission products from the fuel. High radiation near the main steamlines initiates isolation of the following pipelines:

(1) Reactor water sample line

The high radiation trip setting is selected high enough above background radiation levels to avoid spurious isolation, yet low enough to promptly detect a gross release of fission products from the fuel.

Refer to Section 11.5 for subsystem description.

The objective of the main steamline radiation monitoring subsystem is to monitor for the gross release of fission products from the fuel and, upon indication of such release, the control room operators manually initiate appropriate action to limit fuel damage and contain the released fission products.

This subsystem classification is provided in Table 3.2-1.

7.3.1.1a.2.4.1.2.2 Subsystem Power Sources

The 120 VAC RPS Buses A and B are the power sources for the main steamline radiation monitoring subsystem. Two channels are powered from one RPS bus and the other two channels are powered from the other RPS bus.

7.3.1.1a.2.4.1.2.3 Subsystem Initiating Circuits

Four gamma-sensitive instrumentation channels monitor the gross gamma radiation from the main steamlines. The detectors are physically located near the main steamlines just downstream of the outboard main steamline isolation valves. The detectors are geometrically arranged to detect significant increases in radiation level with any number of main steamlines in operation. Their location along the main steamlines allows the earliest practical detection of a gross fuel failure.

Each monitoring channel consists of a gamma-sensitive ion chamber and a log radiation monitor, as shown in Dwgs. **M1-D12-1, Sh. 1**, M1-D12-1, Sh. 2, **M1-D12-1, Sh. 3**, M1-D12-1, Sh. 4, and **M1-D12-1, Sh. 5**. Capabilities of the monitoring channel are listed in Table 11.5-1. Each log radiation monitor has three trip circuits. One upscale trip circuit is used to initiate, isolation, and alarm. The second circuit is used for an alarm and is set at a level below that of the upscale trip circuit used for isolation. The third circuit is a downscale trip that actuates an alarm in the main control room and produces an isolation trip signal. The output from each log radiation monitor is displayed on a six-decade meter on back row panel in the main control room.

7.3.1.1a.2.4.1.2.4 Subsystem Logic and Sequencing

When a significant increase in the main steamline radiation level is detected, trip signals are transmitted to the reactor protection system, the PCRVICS, and to condenser air removal systems. Upon receipt of the high radiation trip signals, the PCRVICS initiate closure of the reactor coolant sample valves.

Four instrumentation channels are provided to assure protective action when needed and to prevent inadvertent scram and isolation resulting from instrumentation malfunctions. The output trip signals of each monitoring channel are combined as shown in Figures 7.3-2 and 7.3-3. Failure of any one monitoring channel does not result in inadvertent action.

7.3.1.1a.2.4.1.2.5 Subsystem Bypasses and Interlocks

No operational bypasses are provided with this subsystem. However, the individual log radiation monitors may be bypassed for maintenance or calibration by the use of test switches on each monitor. Bypassing one log radiation monitor will not cause an isolation, but will cause a single trip system trip to occur.

The main steamline radiation monitor isolation signals provide interlocks to prevent operation of the condenser mechanical vacuum pump.

7.3.1.1a.2.4.1.2.6 Subsystem Redundancy and Diversity

The number of monitoring channels in this subsystem provides the required redundancy and is verified in the circuit description.

The single failure criterion has been met in the design by providing redundant sensors, channels, division logics and trip systems, which are seismically and environmentally qualified. The failure of a single component will not prevent the system from functioning in the event protective action is required. In addition, a single failure will not initiate an isolation function, due to the use of two independent trip systems.

7.3.1.1a.2.4.1.2.7 Testability

A built-in source of adjustable current is provided with each log radiation monitor for test purposes. The operability of each monitoring channel can be routinely verified by comparing the outputs of the channels during power operation.

7.3.1.1a.2.4.1.2.8 Environmental Considerations

This subsystem is designed and has been qualified to meet the environmental conditions indicated in Section 3.11. In addition, this subsystem has been seismically qualified as described in Section 3.10a.

7.3.1.1a.2.4.1.2.9 Operational Considerations

In the event of a high or low radiation level trip within any of the channels, the subsystem will automatically activate the appropriate alarm annunciator and provide a meter indication in the main control room. Similarly, the occurrence of a high-high or an inoperable trip within any of the channels of the system will result in a signal being sent to the PCRVICS.

The panels in the main control room, associated with the PCRVICS, are identified by colored nameplates which indicate the panel function and identification of the contained logic channels.

The only direct support required for the PCRVICS is the electrical power system, which is provided from 120 VAC RPS Buses A and B as described in Subsection 7.3.1.1a.2.4.1.2.2 and Chapter 8.0.

7.3.1.1a.2.4.1.3 Main Steamline Tunnel High Temperature and Differential Temperature

7.3.1.1a.2.4.1.3.1 Subsystem Identification

High temperature in the tunnel in which the main steamlines are located outside of the primary containment could indicate a breach in a main steamline. Also, such a breach may be indicated by high differential temperature between the outlet and inlet ventilation air for this steamline tunnel (note the high differential temperature isolation and isolation alarm function has been removed but a pre-isolation alarm will still be initiated for high differential temperature). The automatic closure of various valves prevents the excessive loss of reactor coolant and the release of a significant amount of radioactive material from the RCPB. Main steamline tunnel temperatures are monitored in the Reactor Building and Turbine Building portions of the steam tunnel; steam tunnel differential temperature is monitored only in the Reactor Building portion of the steam tunnel and the differential temperature does not provide an isolation or isolation alarm function. When high temperatures occur in the main steamline tunnel, the following pipelines are isolated:

(1) Main steamlines

(2) Main steamline drain

The main steamline tunnel high temperature trips are set far enough above the temperature expected during operation at rated power to avoid spurious isolation, yet low enough to detect a pipe crack well below the size that would become unstable and rupture (critical crack size).

High temperature in the vicinity of the main steamlines is detected by four dual element thermocouples in each portion of the steam tunnel with remote readout in the control room. These thermocouples are located along the main steamlines between the drywell wall and the Reactor Building wall, and between the Turbine Building wall and the turbine. The detectors are located or shielded so that they are sensitive to air temperature and not the radiated heat from hot equipment.

The temperature sensors activate an alarm at high temperature. The main steamline tunnel temperature detection system is designed to detect leak rates well below the flow corresponding to critical crack size in a main steam line. A total of four main steamline space high temperature channels are provided in each portion of the steam tunnel. Each main steamline isolation logic receives an input signal from one main steamline Reactor Building tunnel high temperature and one Turbine Building tunnel high temperature channel.

7.3.1.1a.2.4.1.3.2 Subsystem Power Supplies

For the power supplies for the main steamline isolation valves and other isolation valves, see Figures 7.3-2 and 7.3-3, respectively.

7.3.1.1a.2.4.1.3.3 Subsystem Initiating Circuits

Four space and four differential temperature sensing circuits monitor the Reactor Building main steamline area temperatures. Four space temperature sensing circuits monitor the Turbine Building main steamline area temperatures. One space temperature circuit from each portion of the steam tunnel and one Reactor Building differential temperature circuit is connected to each of four instrumentation channels. Both sets of space temperature elements are physically located near the main steamlines in the main steamline tunnel. The eight temperature elements for differential temperature monitoring are located in the ventilation supply and exhaust ducts for the Reactor Building portion of the main steamline tunnel. The locations of the temperature elements provide the earliest practical detection of main steamline breaks. Note that the high differential temperature isolation and isolation alarm function have been removed but the above equipment is still located in the field. A pre-isolation alarm will still be initiated for high differential temperature.

7.3.1.1a.2.4.1.3.4 Subsystem Logic and Sequencing

When a significant increase in main steamline tunnel temperature is detected, trip signals are transmitted to the PCRVICS. The PCRVICS initiate closure of all main steamline isolation and drain valves.

Four instrumentation channels are provided to assure protective action when needed and to prevent inadvertent isolation resulting from instrumentation malfunctions.

The output trip signal of each instrumentation channel initiates a logic trip. The output trip signals of the logic are combined as shown in Figure 7.3-2 and 7.3-3. Failure of any one logic does not result in inadvertent action.

7.3.1.1a.2.4.1.3.5 Subsystem Redundancy and Diversity

Redundancy of trip initiation signals for high space temperature is provided by four temperature elements installed at different locations within both portions of the main steamline tunnel. Each device is associated with one of four logic divisions. Temperature elements A and B are supplied from one power source, and C and D are supplied from a different power source.

Redundancy of trip initiation signals for high differential temperature is provided by four temperature element pairs installed at different locations within the ventilation supply and exhaust areas of the Reactor Building portion of the main steamline tunnel. Each pair of temperature elements is associated with one of four logic divisions. Note that the high differential temperature isolation and isolation alarm function have been removed but the above equipment is still located in the field. A pre-isolation alarm will still be initiated for high differential temperature.

Diversity of trip initiation signals for main steamline break is provided by main steamline tunnel temperature, main steamline high flow, low pressure instrumentation and reactor vessel low low water level, Level 1. An increase in tunnel temperature, main steamline flow, or a decrease in pressure will initiate main steamline and main steamline drain valve isolation.

7.3.1.1a.2.4.1.3.6 Subsystem Bypasses and Interlocks

No operational bypasses are provided with this subsystem. However, the temperature switches may be bypassed by the use of bypass switches provided for surveillance and calibration purposes. Bypassing of a temperature switch will not cause nor prevent a logic channel trip.

Interlocks to other systems are not provided.

7.3.1.1a.2.4.1.3.7 Subsystem Testability

Testability is discussed in Subsections 7.3.2a.2.2.3.1.9 and 7.3.2a.2.2.3.1.10.

7.3.1.1a.2.4.1.4 Main Steamline High Flow

7.3.1.1a.2.4.1.4.1 Subsystem Identification

Main steamline high flow could indicate a break in a main steamline. Automatic closure of various valves prevents excessive loss of reactor coolant and release of significant amounts of radioactive material from the RCPB. On detection of main steamline high flow, the following pipelines are isolated:

(1) Main steamlines
(2) Main steamline drain

The main steamline high flow trip setting was selected high enough to permit isolation of one main steamline for test at rated power without causing an automatic isolation of the other steamlines, yet low enough to permit early detection of a steamline break.

High flow in each main steamline is sensed by four indicating type differential pressure switches that sense the pressure difference across the flow element in that line.

7.3.1.1a.2.4.1.4.2 Subsystem Power Supplies

For power supplies, refer to Figures 7.3-2 and 7.3-3.

7.3.1.1a.2.4.1.4.3 Subsystem Initiating Circuits

Sixteen differential pressure sensing circuits, four for each main steamline, monitor the main steamline flow. One differential pressure circuit for each main steamline is associated with each of four logics. Four differential pressure indicating switches are installed on each main steamline and provide the earliest practical detection of a main steam line break.

7.3.1.1a.2.4.1.4.4 Subsystem Logic and Sequencing

When a significant increase in main steamline flow is detected, trip signals are transmitted to the PCRVICS. The PCRVICS initiate closure of all main steamline isolation and drain valves.

Four instrumentation logics are provided to assure protective action when required and to prevent inadvertent isolation resulting from instrumentation malfunctions. The output trip signal of each instrumentation channel initiates a logic trip. The output trip signals of the logics are combined as shown in Figures 7.3-2 and 7.3-3 in a one-out-of-two-twice and two-out-of-two logics. Logic A or C and B or D are required to initiate main steamline isolation. Logics A and B or C and D are required to initiate main steamline drain isolation. Failure of any one logic does not result in inadvertent action.

7.3.1.1a.2.4.1.4.5 Subsystem Redundancy and Diversity

Redundancy of trip initiation signals for high flow is provided by four differential pressure switches for each main steamline. Each differential pressure switch for each main steamline is associated with one of four logics. Two differential pressure switches for each main steamline are supplied from one power source and two are supplied from a different power source.

Diversity of trip initiation signals is described in Subsection 7.3.1.1a.2.4.1.3.5.

7.3.1.1a.2.4.1.4.6 Subsystem Bypasses and Interlocks

There are no bypasses associated with this Subsystem or interlocks to other systems from main steamline high flow trip signals.

7.3.1.1a.2.4.1.4.7 Subsystem Testability

Testability is discussed in Subsections 7.3.2a.2.2.3.1.9 and 7.3.2a.2.2.3.1.10.

7.3.1.1a.2.4.1.5 Main Turbine Inlet - Low Steam Pressure

7.3.1.1a.2.4.1.5.1 Subsystem Identification

Low steam pressure at the turbine inlet while the reactor is operating could indicate a malfunction of the steam pressure regulator in which the turbine control valves or turbine bypass valves become fully open, and causes rapid depressurization of the reactor vessel. From part-load operating conditions, the rate of decrease of saturation temperature could exceed the allowable rate of change of vessel temperature. A rapid depressurization of the reactor vessel while the reactor is near full power could result in undesirable differential pressures across the channels around some fuel bundles of sufficient magnitude to cause mechanical deformation of channel walls. Such depressurizations, without adequate preventive action, could require thorough vessel analysis or core inspection prior to returning the reactor to power operation. To avoid these requirements following a rapid depressurization, the steam pressure at the turbine inlet is monitored. Pressure falling below a pre-selected value with the reactor in the RUN mode initiates isolation of the following pipelines:

(1) Main steamlines

(2) Main steamline drain

The low steam pressure isolation setting was selected far enough below normal turbine inlet pressures to avoid spurious isolation, yet high enough to provide timely detection of a pressure regulator malfunction. Although this isolation function is not required to satisfy any of the safety design bases for this system, the discussion is included to complete the listing of isolation functions.

Main steamline low pressure is sensed by four bourdon-tube-operated pressure switches that sense pressure downstream of the outboard main steamline isolation valves. The sensing point is located at the header that connects the four steamlines upstream to the turbine stop valves. Each switch is part of an independent channel. Each channel provides a signal to one isolation logic.

7.3.1.1a.2.4.1.5.2 Subsystem Power Supplies

For power supplies, refer to Figures 7.3-2 and 7.3-3.

7.3.1.1a.2.4.1.5.3 Subsystem Initiating Circuits

Four pressure sensitive circuits, one for each main steamline, monitor main steamline pressure. One pressure circuit is associated with each of four logics. The locations of the pressure switches provide the earliest practical detection of low main steamline pressure.

7.3.1.1a.2.4.1.5.4 Subsystem Logic and Sequencing

When a significant decrease in main steamline pressure is detected, trip signals are transmitted to the PCRVICS. The PCRVICS initiate closure of all main steamline isolation and drain valves.

Four instrumentation channels are provided to assure protective action when required and to prevent inadvertent isolation resulting from instrumentation malfunctions. The output trip signal of each instrumentation channel initiates a logic division trip. The output trip signals of the logics are combined as shown in Figures 7.3-2 and 7.3-3. Failure of any one channel does not result in inadvertent action.

7.3.1.1a.2.4.1.5.5 Subsystem Redundancy and Diversity

Redundancy of trip initiation signals for low pressure is provided by four pressure switches, one for each main steamline. Each pressure switch is associated with one of four logics. Two pressure transmitters are supplied from one power source and the other two are supplied from a different power source.

Diversity of trip initiation signals is described in Subsection 7.3.1.1a.2.4.1.3.5.

7.3.1.1a.2.4.1.5.6 Subsystem Bypasses and Interlocks

The main steamline low pressure trip is bypassed by the reactor mode switch in the Shutdown, Refuel, and Startup modes of reactor operation. In the RUN mode, the low pressure trip function is operative.

There are no interlocks to other systems for main steamline low pressure trip signals.

7.3.1.1a.2.4.1.5.7 Subsystem Testability

Testability is discussed in Subsections 7.3.2a.2.2.3.1.9 and 7.3.2a.2.2.3.1.10.

7.3.1.1a.2.4.1.6 Containment Drywell-High Pressure

7.3.1.1a.2.4.1.6.1 Subsystem Identification

High pressure in the drywell could indicate a breach of the RCPB inside the drywell. The automatic closure of various valves prevents the release of significant amounts of radioactive material from the primary containment. On detection of high drywell pressure, the following pipelines are isolated:

(1) HPCI, RCIC Vacuum Relief Valves

(2) RHR-Reactor Vessel Head Spray Valves

(3) Traversing in-core probe guide tubes

(4) RHR-Drywell, Suppression Pool Sprays, Suppression Pool Cooling

(5) Core Spray Test Line Valve

(6) Non-NSSS System isolation valves as described in Subsection 7.3.1.1b

The drywell high pressure isolation setting was selected to be as low as possible without inducing spurious isolation trips.

7.3.1.1a.2.4.1.6.2 Subsystem Power Supplies

For power supplies, refer to Figures 7.3-2 and 7.3-3.

7.3.1.1a.2.4.1.6.3 Subsystem Initiating Circuits

Drywell pressure is monitored by locally mounted pressure switches which are located outside of containment. Three separate sets of pressure switches, consisting of four switches each, monitor Drywell pressure for various isolation valves. Instrument sensing lines connect the switches with the Drywell interior. All Drywell pressure sensing lines are wholly contained within the Reactor Building/secondary containment. The switches are divisionally separate such that no single failure will prevent isolation trip system initiation on high Drywell pressure.

7.3.1.1a.2.4.1.6.4 Subsystem Logic and Sequencing

When a significant increase in drywell pressure is detected, trip signals are transmitted to the PCRVICS. The PCRVICS initiate closure of those system isolation valves identified in Subsection 7.3.1.1a.2.4.1.6.1.

Four instrumentation channels are provided to assure protective action when required and to prevent inadvertent isolation resulting from instrumentation malfunctions. The output trip signals of the instrumentation channels are combined as shown in Figures 7.3-2 and 7.3-3. Failure of any one channel does not result in inadvertent action.

7.3.1.1a.2.4.1.6.5 Subsystem Redundancy and Diversity

Redundancy of trip initiation signals for drywell high pressure is described in Subsections 7.3.1.1a.2.4.1.6.3 and 7.3.1.1a.2.4.1.6.4.

Diversity of trip initiation signals for line breaks inside of the primary containment is provided by drywell high pressure and reactor low water level. An increase in drywell pressure or a decrease in reactor water level will initiate isolation, except for HPCI and RCIC vacuum relief isolation valves which isolate on Drywell Pressure-high or Reactor Vessel/System Steam Supply low pressure. In these cases, Reactor Vessel low pressure provides the diverse isolation signal.

7.3.1.1a.2.4.1.6.6 Subsystem Bypasses and Interlocks

There are no bypasses for drywell high pressure trip signals.

7.3.1.1a.2.4.1.6.7 Subsystem Testability

Testability is discussed in Subsections 7.3.2a.2.2.3.1.9 and 7.3.2a.2.2.3.1.10.

7.3.1.1a.2.4.1.7 and 7.3.1.1a.2.4.1.8

These Subsection numbers were not used.

7.3.1.1a.2.4.1.9 Reactor Water Cleanup (RWCU) System - High Differential Flow and High Flow

7.3.1.1a.2.4.1.9.1 Subsystem Identification

High differential flow or high flow in the reactor water cleanup system could indicate a breach of the RCPB in the cleanup system. The RWCU system flow at the inlet to the heat exchanger is compared with the flow at the outlet of the filter/demineralizer; high flow in the RWCU suction line is also monitored. High differential flow or high flow initiates isolation of the cleanup system.

7.3.1.1a.2.4.1.9.2 Subsystem Power Supplies

For power supply arrangements, see Figures 7.3-2 and 7.3-3.

7.3.1.1a.2.4.1.9.3 Subsystem Initiating Circuits

Two differential flow actuation devices (FDSH-G33-1N603A, FDSH-G33-1N603B) provide an isolation signal A or isolation signal B, respectively, to isolate the reactor water cleanup system on high differential flow. High RWCU system differential flow is measured between the system inlet flow to the heat exchanger (FT-G33-1N036) and combined outlet of the filter/deminerializer (FT-G33-1N041) flow and drain flow (FT-G33-1N012) to either the condenser or radwaste.

The two differential flow actuation devices (FDSH-G33-1N603A, FDSH-G33-1N603B) receive an input signal from a common summer (FY-G33-1K604). The summer receives its inputs from FT-G33-1N036, FT-G33-1N041 and FT-G33-1N012. The locations of the flow transmitters provide the earliest practical detection of a RWCU system line break.

Two high flow (differential pressure switches (PDIS-G33-1N044A and PDIS-G33-1N044B) sensors monitor the suction line to detect the line break.

The single failure criterion applies at the system or function level and not at the signal input or channel level (see response to FSAR Question 032.74). The RWCU isolation valves will receive a system isolation signal from the space temperature trip channels or the high flow signal where PDIS-G33-N044A or N044B provide a RWCU system isolation signal on high flow in the RWCU suction line if a breach occurs in the RWCU system reactor coolant pressure boundary and the flow summer (FY-G33-1K604) was to fail. Thus, single failure of the summer, any of the three flow transmitters or the common power supply for the two isolation actuation devices (PDIS-G33-1N044A, PDIS-G33-1N044B) will not preclude RWCU system isolation.

7.3.1.1a.2.4.1.9.4 Subsystem Logic and Sequencing

When a significant increase in reactor water cleanup system differential flow or high flow is detected, trip signals are transmitted to the PCRVICS. The PCRVICS initiate closure of all RWCU system isolation valves.

Two instrumentation channels are provided to assure protective action when required. The output trip signal of each instrumentation channel initiates a division logic trip and closure of either the inboard or outboard RWCU system isolation valve.

7.3.1.1a.2.4.1.9.5 Subsystem Redundancy and Diversity

Diversity of trip initiation signals for RWCU system line break is provided by high differential flow, high flow, ambient temperature, and Reactor Vessel low, low water level, Level 2. An increase in differential flow, space temperature, or low Reactor vessel water level will initiate RWCU system isolation.

As described in Subsection 7.3.1.1a.2.4.1.9.3, the single failure criterion applies at the system or function level and not at the channel level.

7.3.1.1a.2.4.1.9.6 Subsystem Bypasses and Interlocks

A time delay is provided for the RWCU Differential Flow – High and RWCU Flow – High Functions to prevent spurious trips during RWCU transients. Bypass switches for the RWCU Differential Flow – High and RWCU Flow – High Functions with a status annunciator are located in the control room. The bypass switches are designed to permit testing during normal operation and the annunciator is used to supplement administrative procedures by providing system status in accordance with Regulatory Guide 1.47 requirements.

There are no interlocks to other systems from reactor water cleanup system high differential flow, or high flow trip signals.

7.3.1.1a.2.4.1.9.7 Subsystem Testability

Testability is discussed in Subsection 7.3.2a.2.2.3.1.10.

7.3.1.1a.2.4.1.10 Reactor Water Cleanup (RWCU) System-Area High Temperature and Differential Temperature

7.3.1.1a.2.4.1.10.1 Subsystem Identification

High temperature in the area of the RWCU system could indicate a breach in the RCPB in the cleanup system. High area temperature initiates isolation of the RWCU system. Note that the high differential temperature isolation and isolation alarm function have been removed but the above equipment is still located in the field. A pre-isolation alarm will still be initiated for high differential temperature.

7.3.1.1a.2.4.1.10.2 Power Supplies
For the power supply arrangements, see Figures 7.3-2 and 7.3-3.

7.3.1.1a.2.4.1.10.3 Subsystem Initiating Circuits

Six space temperature and six differential temperature sensing circuits monitor the RWCU system area temperatures. Three space and three differential temperature circuits are associated with each of two instrumentation channels. Redundant space temperature measurements and inlet and outlet differential temperatures of the Reactor Water Cleanup pump room, heat exchanger room and penetration room are used to detect system line breaks. Note that the high differential temperature isolation and isolation alarm function have been removed but the above equipment is still located in the field. A pre-isolation alarm will still be initiated for high differential temperature.

7.3.1.1a.2.4.1.10.4 Subsystem Logic and Sequencing

When a significant increase in RWCU system area space temperature is detected, trip signals are transmitted to the PCRVICS. The PCRVICS initiate closure of all reactor water cleanup system isolation valves.

Two instrumentation channels are provided to assure protective action when required. The output trip signal of each instrumentation channel initiates a division logic trip and closure of either the inboard or outboard RWCU system isolation valve. In order to close both the inboard and outboard isolation valves, both division logics must trip. Protection against inadvertent isolation due to instrumentation malfunction is not provided.

7.3.1.1a.2.4.1.10.5 Subsystem Redundancy and Diversity

Redundancy of trip initiation signals from high space temperature is provided by two space temperature elements installed in each RWCU system area, and which are associated with one of two division logics.

Redundancy of trip initiation signals for high differential temperature is provided by four temperature elements in each RWCU system area. Each pair of sensors is associated with one of two division logics. Note that the high differential temperature isolation and isolation alarm function have been removed but the above equipment is still located in the field. A pre-isolation alarm will still be initiated for high differential temperature.

Diversity is discussed in Subsection 7.3.1.1a.2.4.1.9.5.

7.3.1.1a.2.4.1.10.6 Subsystem Bypasses and Interlocks

The RWCU system high space temperature trips have no automatic bypasses associated with them.

There are no interlocks to other systems from the RWCU system high space temperature trip signals.

7.3.1.1a.2.4.1.10.7 Subsystem Testability

Testability is discussed in Subsection 7.3.2a.2.2.3.1.10.

7.3.1.1a.2.4.1.11 (This subsection has been deleted

7.3.1.1a.2.4.1.12 Main Steamline-Leak Detection

7.3.1.1a.2.4.1.12.1 Subsystem Identification

The main steamlines are constantly monitored for leaks by the leak detection system Dwgs. **M-141, Sh. 1**, M-141, Sh. 2, and **M-142, Sh. 1**. Steamline leaks will cause changes in at least one of the following monitored operating parameters: Reactor Building steam tunnel ambient temperature, flow rate, low turbine inlet pressure, or low water level in the reactor vessel. If a leak is detected, the detection system responds by triggering an annunciator and initiating a steamline isolation trip logic signal.

The main steamline break leak detection subsystem consists of three types of monitoring circuits: a) ambient temperature monitors, which cause an alarm and main steamline isolation to be initiated when an observed temperature rises above a preset maximum, b) steamline mass flow rate monitors, which initiate an alarm and closure of isolation valves when the observed flow rate exceeds a preset maximum, and c) reactor vessel water level detectors which send a trip signal to the isolation valve logic when level decreases below a pre-selected setpoint.

The area temperature monitoring feature is discussed in Subsection 7.3.1.1a.2.4.1.3.

The main steamline flow monitoring feature is discussed in Subsection 7.3.1.1a.2.4.1.4.

The reactor vessel level monitoring feature is discussed in Subsection 7.3.1.1a.2.4.1.1.

The main steamline pressure monitoring feature is discussed in Subsection 7.3.1.1a.2.4.1.5.

7.3.1.1a.2.4.1.13 Main Condenser Vacuum Trip

7.3.1.1a.2.4.1.13.1 Subsystem Identification

In addition to the present turbine stop valve trip resulting from low condenser vacuum which is a standard component of turbine system instrumentation, a main steamline isolation valve trip from a low condenser vacuum instrumentation system is provided, and meets the safety design basis of the PCRVICS.

The main turbine condenser low vacuum signal would indicate a leak in the condenser. Initiation of automatic closure of various Class A valves will prevent excessive loss of reactor coolant and the release of significant amounts of radioactive material from the RCPB. Upon detection of turbine condenser low vacuum, the following lines will be isolated:

(1) Main steamline

(2) Main steamline drain

The turbine condenser low vacuum trip setting was selected far enough above the normal operating vacuum to avoid spurious isolation, yet low enough to provide an isolation signal prior to the rupture of the condenser and subsequent loss of reactor coolant and release of radioactive material.

7.3.1.1a.2.4.1.13.2 Subsystem Power Supplies

For power supply arrangements, see Figures 7.3-2 and 7.3-3.

7.3.1.1a.2.4.1.13.3 Subsystem Initiating Circuits

Four pressure sensing circuits monitor the main condenser vacuum. One pressure circuit is associated with each of four instrumentation channels. Four pressure switches are installed to provide the earliest practical detection of main condenser leak.

7.3.1.1a.2.4.1.13.4 Subsystem Logic and Sequencing

With a significant decrease in main condenser vacuum is detected, trip signals are transmitted to the PCRVICS. The PCRVICS initiate closure of all main steamline isolation and drain valves.

Four instrumentation channels are provided to assure protective action when required, and to prevent inadvertent isolation resulting from instrumentation malfunctions. The output trip signal of each instrumentation channel initiates a logic trip. The output trip signals of the logics are combined as shown in Figures 7.3-2 and 7.3-3. Failure of any one channel does not result in inadvertent isolation action.

7.3.1.1a.2.4.1.13.5 Subsystem Redundancy and Diversity

Redundancy of trip initiation signals for low condenser vacuum is provided by four pressure switches. Each pressure signal is associated with one of four logics. Two pressure switches are supplied by one power source and the other two are supplied from a different power source.

Diversity of trip initiation signals is not provided.

7.3.1.1a.2.4.1.13.6 Subsystem Bypasses and Interlocks

Each main condenser low vacuum trip system isolation signal can be bypassed manually when the appropriate turbine stop valve is not full open, the reactor pressure is below the high pressure scram initiation setpoint, and the reactor mode switch not in run.

There are no interlocks to other systems from the main condenser low vacuum trip signals.

7.3.1.1a.2.4.1.13.7 Subsystem Testability

Testability is discussed in Subsection 7.3.2a.2.2.3.1.10.

7.3.1.1a.2.4.1.14 RHR System High Flow

7.3.1.1a.2.4.1.14.1 Subsystem Identification

High flow in the RHR system suction line could indicate a breach in the RCPB in the RHR system. High flow initiates closure of either the inboard or outboard RHR-Shutdown Cooling system isolation valve.

7.3.1.1a.2.4.1.14.2 Subsystem Power Supplies

For power supply arrangements, see Figures 7.3-2 and 7.3-3.

7.3.1.1a.2.4.1.14.3 Subsystem Initiating Circuits

Two redundant differential pressure switches monitor the RHR shutdown cooling mode suction line. The output trip signal of each sensor initiates closure of either the inboard or outboard RHR system isolation valve.

7.3.1.1a.2.4.1.14.4 Subsystem Logic and Sequencing

When RHR system high low is detected, trip signals are transmitted to the RHR system suction line isolation valves. Two instrumentation channels are provided to assure protective action when required. The output trip signal of each instrumentation channel initiates a division logic trip and closure of either the inboard or outboard RHR system suction line isolation valve.

7.3.1.1a.2.4.1.14.5 Subsystem Redundancy and Diversity

Each of two instrumentation channels are supplied from a different power source. One channel is supplied to inboard logic and the other to outboard logic.

Diverse signals for isolation of the RHR system suction line isolation valves are provided by vessel low level (level 3in addition to excess flow.

7.3.1.1a.2.4.1.14.6 Subsystem Bypasses and Interlocks

There are no interlocks or bypasses associated with RHR system high flow trip signals.

7.3.1.1a.2.4.1.14.7 Subsystem Testability

Testability is discussed in Subsection 7.3.2a.2.2.3.1.10.

7.3.1.1a.2.4.2 System Instrumentation

Sensors providing inputs to the PCRVICS are not used for the automatic control of the process system, thereby achieving separation of the protection and process systems. Channels are physically and electrically separated to reduce the probability that a single physical event will prevent isolation. Redundant channels for one monitored variable provide inputs to different isolation trip systems. The functions of the sensors in the isolation control system are shown in Figures 7.3-2 and 7.3-3. Table 7.3-5 lists instrument characteristics.

7.3.1.1a.2.5 System Logic

The variables and logic arrangements that initiate automatic actuation of all subsystems associated with the PCRVICS are provided in Subsection 7.3.1.1a.2.4.

7.3.1.1a.2.6 System Sequencing

A discussion of all sequencing of all subsystems of the PCRVICS is provided in Subsection 7.3.1.1a.2.4.

7.3.1.1a.2.7 System Bypasses and Interlocks

Bypasses and interlocks for all subsystems associated with the PCRVICS are detailed in Subsection 7.3.1.1a.2.4.1.

7.3.1.1a.2.8 System Redundancy and Diversity

The variables which initiate isolation are listed in the circuit description, Subsection 7.3.1.1a.2.4.1. Also listed there are the number of initiating sensors and channels for the isolation valves.

7.3.1.1a.2.9 System Actuated Devices

To prevent the reactor vessel water level from falling below the top of the active fuel as a result of a pipeline break, the valve closing mechanisms are designed to meet the closure times specified in Table 6.2-12.

The main steamline isolation valves are spring-closing, pneumatic, piston-operated valves. They close on loss of pneumatic pressure to the valve operator. This is fail-safe design. The control arrangement is shown in Figure 7.3-4. Closure time for the valves is adjustable between 3 and 10 seconds. Each valve is piloted by two three-way, packless, direct-acting, solenoid-operated pilot. An accumulator located close to each isolation valve provides pneumatic pressure for valve closing in the event of failure of the normal gas supply system.

The sensor trip channel and trip logic relays for the instrumentation used in the systems described are high reliability relays. The relays are selected so that the continuous load will not exceed 50% of the continuous duty numbers of trip channels needed to ensure that the isolation control system retains its functional capabilities.

7.3.1.1a.2.10 System Separation

Sensor devices are separated physically such that no single failure (open, closure, or short) can prevent the safety action. By the use of separated raceways, the single failure criterion is met from the sensors to the logic cabinets in the relay control rooms. The logic cabinets are so arranged that redundant equipment and wiring are not present in the same bay of a cabinet except as noted in Section 3.12. A bay is a cabinet section separated from other cabinet sections by a fire barrier. Normally the barrier is of full cabinet height and depth. Redundant equipment and wiring may be present in control room bench boards, where separation is achieved by surrounding redundant wire and equipment in metal encasements. From the logic cabinets to the isolation valves, separated raceways are employed to complete adherence to the single failure criterion.

7.3.1.1a.2.11 System Testability

The main steamline isolation valve instrumentation is capable of complete testing during power operation. The isolation signals include low reactor water level, high main steamline flow, high main steamline tunnel temperature, low condenser vacuum, and low turbine pressure. The water level, turbine pressure, and steamline flow sensors are pressure or differential pressure type sensors which may be valved out of service one at a time and functionally tested using a test pressure source. The radiation measuring amplifier is provided with a test switch and internal test source by which operability may be verified.

Functional operability of the temperature switches may be verified by applying a heat source to the locally mounted temperature sensing elements. Control room indications include annunciation and panel lights. The condition of each sensor is indicated by at least one of these methods in addition to annunciators common to sensors of one variable. In addition, the functional availability of each isolation valve may be confirmed by completely or partially closing each valve individually at reduced power using test switches located in the control structure.

The RWCU system isolation signals include low reactor water level, equipment area high ambient temperature, high flow, high differential flow, high temperature downstream of the non-regenerative heat exchanger, and standby liquid control system actuation. The water level sensor is of the differential pressure type and can be periodically tested by valving each sensor out of service and applying a test pressure. The temperature switches may be functionally tested by removing from service and applying a heat source to the temperature sensing elements. The differential flow switches may be tested by applying a test input. The various trip actuation are annunciated in the main control room. Also, valve indicator lights in the main control room provide indication of RWCU isolation valve position.

7.3.1.1a.2.12 System Environmental Considerations

The physical and electrical arrangement of the PCRVICS was selected so that no single physical event will prevent achievement of isolation functions. Motor operators for valves inside the drywell are of the totally enclosed type; those outside the containment have weatherproof-type enclosures. Solenoid valves, whether used for direct valve isolation or as a gas pilot, are provided with watertight enclosures. All cables and operators are capable of operation in the most unfavorable ambient conditions anticipated for normal operations. Temperature, pressure, humidity, and radiation are considered in the selection of equipment for the system. Cables used in high radiation areas have radiation-resistant insulation. Shielded cables are used where necessary to eliminate interference from magnetic fields.

Special consideration has been given to isolation requirements during a LOCA inside the drywell. Components of the PCRVICS that are located inside the drywell and that must operate during a LOCA are the cables, control mechanisms, and valve operators of isolation valves inside the drywell. These isolation components are required to be functional in a LOCA environment (see Section 3.11). Electrical cables are selected with insulation designed for this service. Closing mechanisms and valve operators are considered satisfactory for use in the PCRVICS only after completion of environmental testing under LOCA conditions or submission of evidence from the manufacturer describing the results of suitable prior tests.

7.3.1.1a.2.13 System Operational Considerations

7.3.1.1a.2.13.1 General Information

The PCRVICS are not required for normal operation. The system is initiated automatically when one of the monitored variables exceeds preset limits. No operation action is required for at least 10 minutes following initiation.

All automatic isolation valves can be closed by manipulating switches in the main control room, thus providing the reactor operator with control which is independent of the automatic isolation functions.

7.3.1.1a.2.13.2 Reactor Operator Information

In general, once isolation is initiated, the valve continues to close even if the condition that caused isolation is restored to normal. The reactor operator must manually operate switches in the main control room to reopen a valve that has been automatically closed. Except where manual override features are provided in the manual control circuitry, the operator cannot reopen the valve until the conditions that initiated isolation have cleared.

A trip of an isolation control system channel is annunciated in the main control room so that the reactor operator is immediately informed of the condition. The response of isolation valves is indicated by OPEN-CLOSED status lights in the main control room. All motor-operated and gas-operated isolation valves have OPEN-CLOSED status lights in the main control room.

Inputs to annunciators and indicators are arranged so that no malfunction of the annunciating or indicating equipment can functionally disable the system. Direct signals from the isolation control system sensors are not used as inputs to annunciating or indicating equipment. Relay isolation is provided between the primary signal and the information output. (Refer to Section 7.7 for further discussion of information available for the reactor operator.)

7.3.1.1a.2.13.3 Setpoints

Refer to the Technical Requirements Manual for safety trip setpoints; and the plant Technical Specifications for the Allowable Values.

7.3.1.1a.3 This Subsection Is Not Used

7.3.1.1a.4 RHRS/Containment Spray Cooling System - Instrumentation and Controls

7.3.1.1a.4.1 System Identification

The containment spray cooling system is an operating mode of the Residual Heat Removal System. It is designed to provide the capability of condensing steam in the suppression pool air volume and/or the drywell atmosphere and removing heat from the suppression pool water volume. The system is manually initiated when necessary.

The RHR system is shown in Dwgs. **M-151, Sh. 1**, M-151, Sh. 2, **M-151, Sh. 3**, and M-151, Sh. 4.

7.3.1.1a.4.2 Power Sources

The power supplies for the RHR system are described in Subsection 7.3.1.1a.1.6.

7.3.1.1a.4.3 Equipment Design

Control and instrumentation for the following equipment is required for this mode of operation:

(1) Two RHR main system pumps

(2) Pump suction valves

(3) Containment spray discharge valves

Sensors needed for operation of the equipment are drywell pressure switches, reactor water level indicating switches, and valve limit switches.

The instrumentation for containment spray cooling operation allows the operator to assure that water will be routed from the suppression pool to the containment spray system for use in the drywell and/or suppression pool air volumes.

Containment spray operation uses two pump loops, each loop with its own separate discharge valve. All components pertinent to containment spray cooling operation are located outside of the drywell. The system can be operated such that the spray can be directed to the drywell and/or suppression pool air volume.

7.3.1.1a.4.4 Initiating Circuits

Loop A containment spray cooling mode of the RHR System may be initiated by the operator when the LOCA interlock (reactor vessel low water level and/or drywell high pressure in a one-out-of-two-twice logic configuration) has been satisfied.

This interlock may be bypassed by a manual override switch. The Loop B containment spray cooling mode of the RHR System initiation is identical to that of Loop A.

7.3.1.1a.4.5 Logic and Sequencing

The operating sequence of containment spray following receipt of the necessary initiating signals is as follows:

(1) The RHR system pumps continue to operate.

(2) Valves in other RHR modes are manually positioned or remain as positioned during LPCI.

(3) The RHR service water pumps are started.

(4) RHR service water discharge valves to the RHR heat exchanger are opened.

The containment spray system will continue to operate until the operator closes the containment spray injection valves. The operator can then initiate another mode of RHR if appropriate permissives are satisfied.

7.3.1.1a.4.6 Bypasses and Interlocks

No bypasses are provided for the containment spray system.

7.3.1.1a.4.7 Redundancy and Diversity

Redundancy is provided for the containment spray function by two separated logics, one for each divisional loop. Redundancy and diversity of initiation permissive sensors is described in Subsection 7.3.2a.4.

7.3.1.1a.4.8 Actuated Devices

Dwg. M1-E11-51, Sh. 4 shows functional control arrangement of the containment spray system.

The RHR A and RHR B loops are utilized for containment spray. Therefore, the pump and valves are the same for LPCI and containment spray function except that each has its own discharge valve. See Subsection 7.3.1.1a.1.6.7 for specific information.

7.3.1.1a.4.9 Separation

For separation, refer to Subsection 7.3.1.1a.1.6.8.

7.3.1.1a.4.10 Testability

Containment spray cooling system is capable of being tested up to the last discharge valve during normal operation.

Testing for functional operability of the control logic relays can be accomplished by use of plug-in test jacks and switches in conjunction with single sensor tests. Other control equipment is functionally tested during manual testing of each loop. Adequate indication in the form of panel lamps and annunciators is provided in the main control room.

7.3.1.1a.4.11 Environmental Considerations

See Section 3.11 for environmental qualifications of the containment spray system components.

7.3.1.1a.4.12 Operational Considerations

7.3.1.1a.4.12.1 General Information

Containment spray is a mode of the RHR and is not required during normal operation.

7.3.1.1a.4.12.2 Reactor Operator Information

Sufficient temperature, flow, pressure, and valve position indications are available in the control room for the operator to accurately assess containment spray operation. Alarms and indications are shown in Dwgs. **M-151, Sh. 1**, M-151, Sh. 2, **M-151, Sh. 3**, M-151, Sh. 4, **M1-E11-51, Sh. 1**, M1-E11-51, Sh. 2, **M1-E11-51, Sh. 3**, M1-E11-51, Sh. 4, and **M1-E11-51, Sh. 5**.

7.3.1.1a.4.12.3 Setpoints

Setpoints for the containment spray permissives (drywell pressure and reactor vessel water level) are shown in the Technical Requirements Manual. Refer to the plant Technical Specifications for the Allowable Values.

7.3.1.1a.5 RHRS/Suppression Pool Cooling Mode - Instrumentation and Controls

7.3.1.1a.5.1 System Identification

Suppression pool cooling is an operating mode of the Residual Heat Removal System. It is designed to provide the capability of removing heat from the suppression pool water volume. The system is manually initiated when necessary.

7.3.1.1a.5.2 Power Sources

Power for the RHR system pumps is supplied from four AC buses that can receive standby AC power. Motive and control power for the two loops of suppression pool cooling are the same as that used for the two LPCI loops; see Subsection 7.3.1.1a.1.6. Power for suppression pool cooling instrumentation is from the Class 1E 125 VDC and 120 VAC systems, described in Chapter 8.

7.3.1.1a.5.3 Equipment Design

Control and instrumentation for the following equipment is required for this mode of operation:

(1) RHR pumps,

(2) Pump suction valves, and

(3) Suppression pool return valves.

Suppression pool cooling uses two pump loops, each loop containing two pumps. All components pertinent to suppression pool cooling operation are located outside the drywell.

The suppression pool cooling mode is manually initiated from the control room. This mode is put into operation to maintain the water temperature in the suppression pool within specified limits.

7.3.1.1a.5.4 Initiating Circuits

Initiation of either suppression pool cooling loop is performed manually by the control room operator.

7.3.1.1a.5.5 Logic and Sequencing

The operating sequence of suppression pool cooling mode is as follows:

(1) Valves are manually positioned.

(2) The RHR pumps operate.

(3) The RHR heat exchanger service water system is placed into service.

The suppression pool cooling mode will continue to operate until terminated by manual operator action.

7.3.1.1a.5.6 Bypasses and Interlocks

No bypasses are provided for the suppression pool cooling mode. The suppression pool cooling mode is interlocked with reactor water level and drywell pressure functions by the repositioning of valves associated with the initiation of the LPCI mode on LOCA signal. See Subsection 7.3.1.1a.1.6.4.

7.3.1.1a.5.7 Redundancy and Diversity

Redundancy is provided for the suppression pool cooling mode by separate logics, one for each loop.

7.3.1.1a.5.8 Actuated Devices

Dwgs. **M1-E11-51, Sh. 1**, M1-E11-51, Sh. 2, **M1-E11-51, Sh. 3**, M1-E11-51, Sh. 4, and **M1-E11-51, Sh. 5** show functional control arrangement of the pumps and valves used during the suppression pool cooling mode.

7.3.1.1a.5.9 Separation

Suppression pool cooling is a two-divisional system. Manual control, logic circuits, cabling, and instrumentation for suppression pool cooling are mounted so that divisional separation is maintained.

7.3.1.1a.5.10 Testability

Suppression pool cooling is capable of being tested during normal operation.

Testing for functional operability can be accomplished during manual testing of each loop. Panel lamps and annunciators provide control room indications.

7.3.1.1a.5.11 Environmental Considerations

Refer to Section 3.11 and the Susquehanna SES Environmental Equipment Qualification Program for environmental qualifications of the system components.

7.3.1.1a.5.12 Operational Considerations

7.3.1.1a.5.12.1 General Information

Suppression pool cooling is used to limit suppression pool temperature.

7.3.1.1a.5.12.2 Reactor Operator Information

Temperature, flow, pressure, and valve position indications are available in the control room for the operator to assess suppression pool cooling operation. Annunciator identification and system logic are shown in Dwgs. **M1-E11-51, Sh. 1**, M1-E11-51, Sh. 2, **M1-E11-51, Sh. 3**, M1-E11-51, Sh. 4, and **M1-E11-51, Sh. 5.**

7.3.1.1a.5.12.3 Setpoints

There are no setpoints. The system is only manually initiated.

7.3.1.1b System Description (Non-NSSS)

7.3.1.1b.1 Primary Containment Isolation Control System for Non-NSSS-Instrumentation and Control

The isolation described in this subsection as non-NSSS and that described in Subsection 7.3.1.1a.2 as NSSS provide the complete containment isolation ESF.

7.3.1.1b.1.1 System Description

The primary containment isolation for non-NSSS is designed to ensure the containment integrity in the event of a LOCA. The system includes divisionalized logic and actuation circuits that initiate the closing of non-NSSS containment isolation valves.

The initiating contact for each division is provided by the NSSS initiating logic for the primary containment isolation control system and is a combination of the following:

(1) Reactor vessel - low water level

(2) Drywell - high pressure

In addition, containment purge supply and exhaust lines isolate on high radiation measured at the SGTS exhaust stack.

Sensors and initiating circuits are provided in the NSSS-PCRVICS. Refer to 7.3.2a.2.2.3.1.9 and 7.3.2a.2.2.3.1.10 for discussion of calibration and testing. For discussion of test provisions of the non-NSSS circuits refer to Subsection 7.3.2b.2-4.10. For description of the SGTS exhaust radiation monitors, refer to Subsection 11.5.2.1.4.

The objective of the system is to provide automatic isolation of all non-NSSS pipeline penetrations of the primary containment upon a LOCA.

A specific identification of containment isolation valves is provided in Table 6.2-12.

Isolation of the following pipelines is initiated by this system:

(1) Reactor Building Closed Cooling Water Supply and Return
(2) Drywell & Suppression Chamber Purge Supply and Exhaust Lines
(3) Drywell & Suppression Chamber Gas Sampling and Return Lines

(4) Instrument Gas Supply and Return Lines
(5) Drywell Floor Drain to Radwaste
(6) Equipment Drain to Radwaste
(7) Chilled Water Supply and Return Lines
(8) Suppression Pool Cleanup

7.3.1.1b.1.2 Initiating Circuits and Logic

The non-NSSS isolation logics are derived from inputs from the PCRVICS and Core Spray System. Refer to Subsection 7.3.1.1a.2 for description of initiating circuits, logic, bypasses, interlocks, redundancy and diversity of the NSSS portion of this system.

Eight sets of contacts on six relays, four sets of contacts and three relays per division, represent the interface from NSSS to non-NSSS containment isolation. These relays will be de-energized and initiate isolation on any of the following conditions:

(1) Manual Isolation

(2) Low low Reactor Water Level 2.

(3) Low low low Reactor Water Level 1.

(4) High Drywell Pressure

For Containment Purge lines, there signals are combined with trip signals from the SGTS Exhaust Radiation - high sensors.

Normally energized relays are used to multiply these signals. The assignment of electrical divisions to containment isolation valves is as shown in Table 6.2-12.

7.3.1.1b.1.3 Bypasses, Interlocks, and Sequencing

No sequencing is required for this system.

A timing circuit is implemented to allow manual opening of isolation valves after the isolation signal is received and the timer times out. These timing circuits reset when the isolation signal is manually reset to ensure closure upon receiving the next isolation signal. The time varies to meet post-LOCA monitoring of the containment. Refer to Subsection 6.2.4.3.3.1 and Table 6.2-12, Remarks column, for identification of valves, times, and bypasses.

The Low Reactor Water Level/High Drywell Pressure isolation signal initiation of CIG valves HV-12603, HV-22603, SV-12651, SV-22651, SV-12605 and SV-22605 control logics can be manually bypassed from the Control Room following an ATWS event, or during beyond design basis conditions (e.g., Rapid Depressurization or Primary Containment Flooding). Bypassing of these isolation signal interlocks will ensure the MSIVs can be maintained open during an ATWS event, or will allow the MSIVs to be reopened, to preserve containment integrity and to keep the main condenser available as a heat sink or to reestablish it as a heat sink during other beyond design basis conditions. Bypassing these isolation signal interlocks will also enable the SRVs to be individually controlled for pressurization and pressure control of the RPV during a Loss of All Decay Heat Removal beyond design basis event. Individual control of SRVs enables decay heat removal via RWCU to be maximized until another method of decay heat removal is available.

7.3.1.1b.1.4 Redundancy and Diversity

The Division I initiation circuit is independent and redundant to the Division II circuit. Diversity of measurements is discussed in Subsection 7.3.1.1a.

7.3.1.1b.1.5 Actuated Devices

Table 6.2-12 lists all valves actuated by the containment isolation control system.

7.3.1.1b.1.6 Supporting Systems

The power sources for the isolation logic are supplied from two divisionalized and redundant 120 VAC buses. Refer to Chapter 8.0 for division.

Two additional divisionalized and redundant 125 VDC power sources are supplied to auxiliary isolation timing logics for drywell and suppression chamber purge supply and exhaust lines, drywell, and suppression chamber sampling and return lines, and drywell burp and purge lines.

7.3.1.1b.1.7 Instrument Sensing Lines

All instrument line penetrations of the primary containment are equipped with excess flow check valves which isolate upon a high flow and differential pressure across the valve. This would be caused by a downstream line break on a high pressure system. When isolation of any excess flow check valve occurs, control room alarm alerts the operator. Two position-indicating lights on a backrow panel in the main control room panel provide the status of each valve. A test pushbutton allows a circuit test for the indicating lights as well as the annunciating logic for all excess flow check valves. Annunciation is provided on the unit operating benchboard to indicate excess flow check valve operation.

7.3.1.1b.2 Combustible Gas Control System

The concentration of the combustible gas inside the primary containment may increase after a LOCA as described in Subsection 6.2.5.

7.3.1.1b.2.1 System Description

Two pairs of redundant hydrogen recombiner units are controlled from two divisionalized panels located in the upper and lower relay rooms. The instrumentation and controls for each hydrogen recombiner are listed in Subsection 6.2.5.5.1. Refer to Subsection 6.2.5.4 for periodic test requirements. Note the hydrogen recombiners are not credited in the accident analysis and although the equipment is maintained safety related, the hydrogen recombiners no longer perform a safety related function.

7.3.1.1b.2.1.1 Initiating Circuits, Logic, Bypasses, Interlocks, and Sequencing

Each hydrogen recombiner is initiated by manual on-off control from the divisionalized system panels. Bypasses of hydrogen recombiners are identified in the description for the Bypass Indication System (BIS) in Section 7.5.

No interlocks or sequencing is provided for this system.

7.3.1.1b.2.1.2 Redundancy and Diversity

Two redundant hydrogen recombiners are located in the primary containment and two redundant units are in the suppression chamber. Controls and instrumentation are redundant and divisionalized on a one-to-one basis with the mechanical equipment.

7.3.1.1b.2.1.3 Supporting Systems

The primary containment atmospheric monitoring system (hydrogen and oxygen analyzers) indicates the performance of the hydrogen recombiner system. Refer to Subsection 6.2.5.2 for system description and to Section 7.5 for safety-related display instrumentation.

7.3.1.1b.3 Primary Containment Vacuum Relief - Instrumentation and Control

7.3.1.1b.3.1 System Description

The system is designed to allow periodic testing of all five pairs of primary containment vacuum relief valves to ensure their functional capability. This is accomplished by opening each valve by remote actuation of the solenoid valve. Status-indicating lights of the relief valve position verifies the operation.

7.3.1.1b.3.2 Initiating Circuits, Logic, Bypasses, Interlocks, and Sequencing

One test selector switch per division permits the testing of each relief valve in that group. A momentary test pushbutton will cause a selective opening of each valve. All valves will close again when the selector switch is returned into normal position.

No system bypasses, interlocks, or sequencing are provided.

7.3.1.1b.3.3 Redundancy and Diversity

Redundancy is given by the divisionalized system design. Diversity is not required for this manually-operated system.

7.3.1.1b.3.4 Actuated Devices

The vacuum relief valves are the only actuated devices.

7.3.1.1b.4 Standby Gas Treatment System (SGTS)

For the description and operation of the SGTS, refer to Subsections 6.5.1.1 and 9.4.2.

7.3.1.1b.4.1 Initiating Circuits

Each train of the SGTS may be initiated or stopped in a protective function mode as follows:

a) High radiation sensed by any of the five gamma sensors located as follows (see Section 11.5 and Table 11.5-1):

   1) Unit 1 - Refueling floor high exhaust duct

   2) Unit 2 - Refueling floor high exhaust duct

   3) Unit 1 - Refueling floor wall exhaust duct

   4) Unit 2 - Refueling floor wall exhaust duct

   5) Railroad access shaft exhaust duct

b) LOCA signals provided by NSSS to non-NSSS output initiating contacts (see Subsection 7.3.1.1b.1.1).

c) Primary containment vent and purge operation will be stopped by high radiation detected at the SGTS exhaust vent.

d) An operating train will be stopped by low air flow and the standby train initiated. This occurs only when SGTS is not responding to a reactor building isolation signal. The low flow trip is automatically bypassed when SGTS is to perform its ESF function.

e) Secondary protection is provided by sensors monitoring an operating filter train for a malfunction condition that will trip an operating train and cause the standby train to start. That malfunction condition is a high-high charcoal filter temperature (also controls fire protection deluge water valves and drain valves).

f) High inlet header static pressure of the SGTS will initiate a SGTS train.

g) System protection (not safety-related) is provided to initiate the filter train fan in a cooling mode on high charcoal temperature (pre-ignition temperature).

Each channel provides:

1) Continuous monitoring of radiation

2) Alarms in the control room for downscale/inoperative, high, and high-high radiation

3) Analog signals for the radiation indicator and recorder and trip circuit for initiating isolation and stop signals

Capability for sensor checks and capability for test and calibration is provided as described in Subsection 7.3.2b.2-4.10.

7.3.1.1b.4.2 Logic and Sequencing

The two SGTS redundant filter trains are set up in a lead-lead mode. When an emergency start signal exists in this mode, both trains will start.

The flow control of the operating SGTS uses inlet header pressure to outside air pressure differential as a setpoint to ensure the inlet header pressure is less than atmospheric. This prevents reactor building air exhaust to the atmosphere, through the outside air intake plenum.

The SGTS is provided with redundant control loops to control the following variables:

a) Total airflow of the system

b) Relative humidity of air entering the charcoal absorber

c) Pressure in the SGTS inlet header

d) Air pressure in the reactor building

e) Rate of flow of cooling air through the charcoal absorbers

Operation of the above loops is described in Subsection 6.5.1.1.

7.3.1.1b.4.3 Interlocks

No outputs of reactor building zone pressure differential controllers (PDIC-07554A&B) are present under the following conditions:

a) No reactor building isolation signal

b) Respective SGTS fan is not running

As a result, though both of the reactor building negative pressure control loops are operable at all times, dampers PDD-07554A&B will not operate when the above two conditions exist.

7.3.1.1b.4.4 Bypasses

The manual control switches of the fans in the SGTS when in OFF position provide automatic input to the Bypass Indication System (BIS). See Section 7.5 for complete discussion of BIS.

7.3.1.1b.4.5 Redundancy

Controls and instrumentation are provided on a none-to-one basis with the mechanical equipment, so that the controls and instrumentation preserve the redundancy of the mechanical equipment. Equipment, controls, and instrumentation of filter train A belong to Division I and filter train B to Division II.

7.3.1.1b.4.6 Diversity

The diversity of the NSSS-furnished LOCA signal from the PCRVICS is used.

7.3.1.1b.4.7 Actuated Devices

The list of actuated equipment is shown in Table 7.3-13.

7.3.1.1b.4.8 Separation

The instrumentation, controls, and power supply of the SGTS system are redundant, and are physically and electrically separate in accordance with IEEE Std. 384-1974.

Redundant local control panels of the SGTS system are physically separate.

7.3.1.1b.4.9 Supporting Systems

The instrumentation and controls of the SGTS are powered from the Class 1E 125 VDC and 120 VAC systems. These electrical systems are discussed in Chapter 8.

The SGTS equipment room heating and ventilating system supports the SGTS and is discussed in Subsection 9.4.1.

7.3.1.1b.4.10 System Parts Not Required for Safety

The parts of the SGTS not required for safety are as follows:

a) Charcoal filter fire protection. The fire protection system is discussed in Subsection 9.5.1.

b) Instrumentation loops for monitoring air flow from the reactor building recirculation system and outside makeup air intake.

7.3.1.1b.5 Reactor Building Recirculation System

For the description and operation of the recirculation system, refer to Subsections 6.5.3 and 9.4.2.

7.3.1.1b.5.1 Initiating Circuits

Each fan of the recirculation system may be initiated or stopped in a protective function by the following:

a) High radiation sensed by any of the five gamma sensors located as follows (see Section 11.5 and Table 11.5-1):

1) Unit 1 - Refueling floor high exhaust duct
2) Unit 2 - Refueling floor high exhaust duct
3) Unit 1 - Refueling floor wall exhaust duct
4) Unit 2 - Refueling floor wall exhaust duct
5) Railroad access shaft exhaust duct

b) LOCA signals provided by NSSS to non-NSSS output initiating contacts.

c) Low system airflow will initiate the standby fan. The low flow is detected by a pressure differential switch sensing low differential pressure between supply and exhaust plenums of the recirculation system.

The initiation signals described in a or b above may open at least one of two, arranged in parallel, isolation-type dampers provided on ducts connecting the supply and return plenums of the recirculation system with appropriate normal ventilation ductwork.

Each channel provides:

1) Continuous monitoring of radiation.

2) Alarms in the control room for downscale/inoperative, high, and high-high radiation.

3) Analog signals for the radiation indicator/recorder, and digital output initiating signal.

7.3.1.1b.5.2 Logic and Sequencing

Capability for sensor checks and test and calibration is provided as described in Subsection 7.3.2b.2-4.10.

Two redundant recirculation fans are normally set up in a "lead-lag" fashion. When an initiation signal exists, the lead fan automatically starts and the other fan remains on standby. The standby fan pressure differential switch (flow switch) monitors the operation of the lead fan by sensing pressure differential developed by the running lead fan between common supply and exhaust plenums. If the lead fan, and the system loses airflow, the standby fan will start.

Except for the differential pressure switches, no other instruments or instrument loops are provided for the recirculation system.

The initiation signals except for low system air flow will also initiate closure of isolation dampers for the affected portions of the secondary containment, and open dampers linking the recirculation system with the respective supply and exhaust air duct systems.

7.3.1.1b.5.3 Interlocks

See Table 7.3-14 for interlocks between control systems and mechanical equipment and components. This table includes the reactor building isolation dampers and the reactor building plant normal operation ventilation fans interlocked with ESFAS.

7.3.1.1b.5.4 Bypasses

The hand control switch of each recirculation fan, when in OFF position, provides automatic input to the Bypass Indication System (BIS). See Section 7.5 for complete discussion of BIS.

7.3.1.1b.5.5 Redundancy

Controls and instrumentation are provided on a one-to-one basis with the mechanical equipment, so that the controls and instrumentation preserve the redundancy of the mechanical equipment. Equipment, controls, and instrumentation of fan A belong to Division I and fan B to Division II.

7.3.1.1b.5.6 Diversity

The diversity of the NSSS-furnished LOCA signal from the PCRVICS is used.

7.3.1.1b.5.7 Actuated Devices

The list of actuated equipment, including the reactor building isolation dampers, and non-safety-related normal plant operation ventilation fans, is shown in Table 7.3-14.

7.3.1.1b.5.8 Separation

The instruments, controls, and power supply of the recirculation system are redundant and are physically and electrically separated.

7.3.1.1b.5.9 Supporting Systems

The instrumentation and controls of the recirculation system are powered from the Class 1E 125 VDC and 120 VAC systems. These electrical systems are discussed in Chapter 8.

7.3.1.1b.5.10 System Parts Not Required for Safety

All instrumentation and controls of the recirculation system are safety-related and required for safety.

7.3.1.1b.6 Reactor Building Isolation and HVAC Support

Isolation of the reactor building (secondary containment) is a function of the reactor building ventilation system discussed in Subsection 9.4.2.1.

7.3.1.1b.6.1 Initiation Circuits

Refer to Subsection 9.4.2.1.3, for discussion of isolation signals which are the same as those used for the standby gas treatment and reactor building recirculation systems. See Subsection 7.3.1.1b.4 and 7.3.1.1b.5.

Capability for sensor checks and test and calibration is provided as described in Subsection 7.3.2b.2-4.10.

7.3.1.1b.6.2 Logic and Sequencing

Refer to Subsection 9.4.2.1.3.

7.3.1.1b.6.3 Interlocks

The isolation function is not interlocked with other systems.

7.3.1.1b.6.4 Bypasses

Zone I and II HVAC isolation bypass switches are provided to isolate the appropriate zone from the recirculation system and remove it from the secondary containment boundary.

7.3.1.1b.6.5 Redundancy

Controls and instrumentation are provided on a one-to-one basis with mechanical equipment, i.e., the redundant dampers have separate actuation systems.

7.3.1.1b.6.6 Diversity

The diversity of the NSSS-furnished LOCA signal from the PCRVICS is used.

7.3.1.1b.6.7 Actuated Devices

Refer to Table 7.3-14.

7.3.1.1b.6.8 Separation

Physical and electrical separation of actuation systems is provided.

7.3.1.1b.6.9 Supporting Systems

Instrumentation and controls are powered from Class 1E 125 VDC and 120 VAC systems.

7.3.1.1b.6.10 System Parts Not Required for Safety

Refer to Subsection 9.4.2 for non-safety-related parts.

7.3.1.1b.7 Habitability, Control Room Isolation

Instrumentation and controls function in the following systems to provide control room isolation:

1) Emergency outside air system
2) Control structure HVAC system

Refer to Subsection 9.4.1 for descriptions.

Capability for sensor checks and for test and calibration is provided as described in Subsection 7.3.2b.2-4.10.

7.3.1.1b.7.1 Initiation

Control Structure Isolation is initiated by:

a) Outside Air High-High Radiation (see Section 11.5)
b) Reactor Building Isolation Signal (SGTS Isolation)

7.3.1.1b.7.2 Logic and Sequencing

One mode of isolation is provided: Diverting the outside air through the Emergency Outside Air Intake filter in the event of high radiation detection and reactor building isolation. Refer to Subsection 9.4.1 and Tables 7.3-15 and 7.3-16 for details.

7.3.1.1b.7.3 Interlocks

The systems listed are interlocked to provide the appropriate isolation mode and initiate proper equipment. Control Room Floor, Computer Room Floor and Control Structure H&V systems are interlocked with the Control Structure Chilled Water System. Refer to Subsection 7.3.1.1b.8.5.

7.3.1.1b.7.4 Bypasses

Off position of the hand control switches in the Habitability and Control Structure Isolation Systems are automatically input to the Bypass Indication System (see Section 7.5).

7.3.1.1b.7.5 Redundancy

Controls and instrumentation are provided on a one-to-one basis with the redundant mechanical equipment they control.

7.3.1.1b.7.6 Diversity

The diversity provided in the NSSS LOCA signals is used. No diversity is provided in radiation detection.

7.3.1.1b.7.7 Actuated Devices

Actuated equipment is listed in Tables 7.3-15.

7.3.1.1b.7.8 Separation

Physical and electrical separation of all actuation systems is provided.

7.3.1.1b.7.9 Supporting Systems

Instrumentation and controls are powered from Class 1E 125 VDC and 120 VAC systems. The control structure chilled water system and emergency service water provide support when the systems are operated as a safety function.

7.3.1.1b.7.10 System Parts Not Required for Safety

Refer to Subsection 9.4.1, description of individual systems.

7.3.1.1b.8 Auxiliary Support Systems

Auxiliary support systems are required for proper operation of ESF systems as listed in Subsection 7.3.1.

7.3.1.1b.8.1 Emergency Service Water System - Instrumentation and Control

The emergency service water system is discussed in Subsection 9.2.5. The instrumentation for the two redundant emergency service water loops is designed with necessary logic and actuation circuits, controls, and instrumentation for process monitoring by the control room operator. Capability for test and calibration is provided as described in Subsection 7.3.2b.2-4.10.

In addition, a temperature control valve and associated logic and instrumentation to accomplish control of the diesel generator intake air temperature is discussed in Sections 8.3.1.4.3, 9.5.5.2, and 9.5.5.5.

7.3.1.1b.8.1.1 Initiating Circuits

A signal from each aligned diesel generator start logic initiates the automatic start of the associated emergency service water pump. For diesel generator logic, see Subsection 8.3.1.4. Diesel generator A (C) starts ESW pump A (C), which supplies cooling water for loop A (Division I) of the system. Signals from the start logic of diesel generator B (D) start the ESW pump B (D) for loop B (Division 2) of the system.

Diesel Generator E serves as a replacement for any of the four normally-aligned diesel generators, A, B, C, or D. In the event that Diesel Generator A, B, C, or D is removed from service for repair or maintenance, the replacement Diesel

Generator 'E" is aligned to the respective ESS Bus and will initiate the automatic start of the associated Emergency Service Water Pump.

Manual control for all four pumps is available to the operator in the control room and on the remote shutdown panel. Manual control of the diesel generator cooler main inlet/outlet valves for the diesel generators is available only in the local engine control panels.

7.3.1.1b.8.1.2 Logic, Bypasses, Interlocks, and Sequencing

The logics of the ESW system uses electromechanical relays and switch contacts that actuate the equipment.

7.3.1.1b.8.1.2.1 Logic Power Source

The power supply for the auxiliary supporting system divisionalized logic is from the divisionalized 125 VDC Class 1E bus. Refer to Section 8.3.

7.3.1.1b.8.1.2.2 Pump Logic

Refer to the electrical schematic diagram E-146 which was submitted under separate cover.

Automatic and/or manual start of each pump is initiated if the following conditions exist:

a) Power supply bus voltage available

b) Automatic pump start signal from the aligned diesel generator logic or manual control from the control room (or remote shutdown panel)

If automatic start fails because of power supply bus trouble, one annunciator for each system loop alerts the operator in the control room.

Indicating lights for pump status are provided on the control room panel.

Once a pump is started, it remains in operation until any one of the following conditions trip the circuit breaker:

a) Manual stop by operator in control room or at remote shutdown panel

b) Feeder overcurrent

c) Power bus lockout

d) Power bus undervoltage

Long-time phase B overcurrent is alarmed for each pump motor in the main control room, but does not trip the pump.

7.3.1.1b.8.1.2.3 Bypasses

A manual bypass of the pump control logic is possible by switching the transfer switch in the remote shutdown panels.

The physical removal of the pump motor circuit breaker for functional testing of the control logic represents a bypass of the system.

For bypass indication system description refer to Section 7.5.

7.3.1.1b.8.1.2.4 Interlocks

The diesel cooler main inlet/outlet valves are normally open on both loops of ESW for the diesel generators which are aligned to the ESS buses.

If Diesel Generator 'E' is being operated in the test mode while it is not aligned to an ESS bus, an auto-start on the aligned diesel generators will trip Diesel Generator 'E' and isolate the ESW inlet/outlet valves to the diesel generator.

During maintenance on either loop of the ESW system, local switches in each diesel bay will permit the respective loop of ESW to be isolated at each diesel generator.

7.3.1.1b.8.1.2.5 Sequencing

Refer to Subsection 9.2.5.1.

7.3.1.1b.8.1.3 Redundancy

Controls and instrumentation are provided on a one-to-one basis with the mechanical equipment to maintain the redundancy of the mechanical equipment.

ESW loop A is in Division I with pumps A and C providing the necessary system flow. System loop B is in Division II using pumps B and D.

The instrumentation of one process loop is redundant to the other.

7.3.1.1b.8.1.4 Actuated Devices

Each pump running condition generates a signal to permit the start of its associated HVAC air cooling fan and also permits the control structure chilled water system safety function to be tested. For description of the HVAC system, refer to Subsection 9.4.8.

An actuation signal is provided from the pump A or C running condition to start the chart drive of the emergency service water flow and RHR service water flow recorder for loop A in the control room. Pump running condition of pump B or D initiates the chart drive for the system loop B recorder.

7.3.1.1b.8.1.5 Supporting Systems

The ESSW pumphouse HVAC system described in Subsection 9.4.8 is a supporting system to the emergency service water system.

7.3.1.1b.8.1.6 ESW Instrumentation Not Required for Safety

Non-safety related instrumentation in the control room includes:

a) Diesel generator A cooler outlet temperature

b) Diesel generator B cooler outlet temperature

c) Diesel generator C cooler outlet temperature

d) Diesel generator D cooler outlet temperature

e) ESW loop A (B) flow (recording)

Diesel Generator 'E' serves as replacement for any of the four normally aligned Diesel Generators A, B, C, or D. In the event that Diesel Generator A, B, C, or D is removed from service for repair or maintenance, the replacement Diesel Generator 'E' will be aligned to the respective ESS Bus. Diesel Generator 'E' cooler outlet temperature will be indicated on the diesel generator cooler outlet temperature instrumentation in the control room for the diesel generator it is replacing.

Refer to Section 7.5 for instrument ranges, accuracy, and panel location for the above-mentioned instruments.

Control room annunciators are not required for safety, but alert the operator of abnormal process conditions. The following alarms are in the main control room:

a) Spray pond low level

b) ESSW structure flooded

c) ESW loop low flow

d) Diesel generator coolers high outlet temperature

e) Diesel generator rooms flooded

7.3.1.1b.8.2 RHR Service Water System - Instrumentation and Controls

The description, the design basis, and the safety evaluation of the RHR service water system are in Subsection 9.2.6.

The controls and instrumentation for the RHR service water system are designed to provide adequate information to the control room operator for control and monitoring of the system operating modes. Capability for test and calibration is provided as described in Subsection 7.3.2b-2.4-10.

7.3.1.1b.8.2.1 Initiation Circuits

The RHR service water system can be manually initiated from either the main control room or the remote shutdown panel.

7.3.1.1b.8.2.2 Logic, Bypasses, Interlocks, and Sequencing

The RHR water system control logics are designed using electromechanical relays and control switch signals to actuate the equipment.

7.3.1.1b.8.2.2.1 Logic Power Source

The RHR service water system logics are powered from two independent divisionalized 125 VDC Class 1E power sources. Refer to Section 8.3 for description.

7.3.1.1b.8.2.2.2 Pump Control Logic

For documentation of the logic, refer to electrical schematic diagram E-150 which was submitted under separate cover.

Each RHRSW pump can be started from the main control room, or one can be started from the unit remote shutdown panel (1B/2A) and the other (1A/2B) from the unit switchgear. In order to start any RHRSW pump, the following conditions must be satisfied:

a) Power supply bus voltage is available

b) Control switch is turned to pump run position. Any of the following conditions trip the circuit breaker to the pump motor.

1) Manual stop by operator in main control room or at the remote shutdown panel (or local circuit breaker control switch at the switchgear)
2) Motor feeder overcurrent
3) Power bus lockout
4) Power bus undervoltage

Long-time phase B overcurrent is alarmed in the main control room, but does not trip the circuit breaker.

7.3.1.1b.8.2.2.3 Bypasses

A manual bypass of the main control room pump control is possible by transferring control of pump 1B or 2A at the unit remote shutdown panel or by controlling pump 1A or 2B at the unit switchgear.

The physical removal of the circuit breaker from its operating position for functional testing of the pump control logic inhibits the operation of the pump.

The above bypasses are automatically indicated on the bypass indication panel in the control room. For the Bypass Indication System (BIS) description, refer to Section 7.5.

7.3.1.1b.8.2.2.4 Valve Control Logic

In general, motor-operated valves are controlled by momentary switches with seal-in logic or by switches with maintained contacts to ensure a fully opened or closed position. The exceptions are (1) the RHR service water heat exchanger inlet valves, which are designed to modulate the RHR service water flow by manual jogging of the valve in either an opening or closing direction and (2) the spray pond bypass valves, which are part of the UHS. These valves are used to throttle ESW flow in support of ESW pump in-service testing. This function is in addition to their normal spray pond bypass function.

7.3.1.1b.8.2.2.5 Interlocks

If a LOCA occurs during a routine test of the RHR service water system, the function for "LOCA trip enable," initiated by the operator before start of testing procedure, will cause the LOCA signal to open the circuit breaker of the pump in test. This logic design prevents overloading the diesel generator in its initial operation. Under these conditions, manual initiation requires resetting the "LOCA trip enable" switch.

7.3.1.1b.8.2.3 Actuated Devices

Refer to sequencing for description of equipment actuated. The running condition for each pump closes a contact for the start of its associated HVAC air cooling fan. For description of the HVAC system, refer to Subsection 9.4.8.

The flow recorder for RHR service water and ESW flow receives the initiating signal for the chart drive from the running condition of the RHR service water pump.

7.3.1.1b.8.2.4 Redundancy and Diversity

Redundancy of the mechanical equipment is maintained on a one-to-one basis with controls and instrumentation.

The Pump A and the associated process loop A are in Division I. Pump B and the associated process loop B are in Division II.

The display instrumentation in the main control room provides diversity for the process monitoring by allowing the operator to evaluate the system function from system flow, pump discharge pressure, and water temperature.

7.3.1.1b.8.2.5 Supporting Systems

The HVAC system for the ESSW pumphouse is described in Subsection 9.4.8.

7.3.1.1b.8.2.6 RHR Service Water Instrumentation Not Required for Safety

The following variables provide system monitoring to the operator but are not required for safety:

a) RHR service water pump discharge pressure
b) RHR service water flow and ESW flow recording
c) Heat exchanger inlet temperature
d) RHR service water heat exchanger inlet valve percent open position
e) RHR service water radiation monitoring (refer to Section 11.5)
f) Spray pond temperature
g) Computer inputs for process monitoring
h) Annunciator system
i) Spray Pond Riser Level

All instrument data and ranges for the RHR service water system are listed in Section 7.5.

7.3.1.1b.8.3 Containment Instrument Gas System - Instrumentation and Control

The containment instrument gas system is described in Subsection 9.3.1.5 and gives the design basis, system operation, and safety evaluation.

The two redundant sets of high pressure nitrogen storage bottles are designed as an ESF auxiliary supporting system to provide the necessary compressed gas for the operation of the main steam relief valves for auto depressurization (ADS).

Containment isolation of the instrument gas system is described in Subsection 7.3.1.1b.1. Capability for testing is provided when testing containment isolation and further described in Subsection 7.3.2b.2-4.10.

7.3.1.1b.8.3.1 Initiating Logic and Interlocks

A pressure sensing transmitter is located in piping headers A&B leading to the ADS relief valves.

A signal from an electronic switch automatically opens the isolation valve of the nitrogen storage bottles if the normal supply pressure is not available from the gas compressors. A signal from containment isolation also initiates the automatic opening of the nitrogen storage isolation valve.

The manual control of the outboard isolation valves allows the operator, after determining that adequate supply pressure is available from the compressors, to open the normal supply line to the ADS relief valves. This operation will isolate the instrument gas storage bottles. However, low instrument gas header pressure will automatically override this interlock to ensure the necessary gas supply.

Refer to electrical schematic diagram E-172 which was submitted under separate cover.

The logic power supply for containment isolation valves is divisionalized from a 125 VDC Class 1E bus.

The instrument panel supply is provided by a 120 VAC Class 1E source to 120 VAC/24 VDC power supply.

7.3.1.1b.8.3.2 Bypasses, Interlocks, and Sequencing

Refer to Subsection 7.3.1.1b.1.3 for Bypasses associated with CIG Valves HV-12603, HV-22603, SV-12651, SV-22651, SV-12605 and SV-22605.

The system is not designed with bypass capability. Sequencing is not applicable for this system. This system is not interlocked with other systems.

7.3.1.1b.8.3.3 Redundancy

Instrumentation and controls are provided on a one-to-one basis with the mechanical equipment.

7.3.1.1b.8.3.4 Containment Instrument Gas - Instrumentation Not Required for Safety

The instrumentation application discussed in Subsection 9.3.1.5.5 describes the monitoring instruments and controls for the gas compressors and its controls.

The monitoring instruments in the auxiliary support system are not safety-related. Each train of gas bottles has a low header pressure alarm in the main control room. The isolation valve position is indicated by status lights on the main control room panel. Refer to Table 7.5-7 for listing of instrumentation for the containment instrument gas system.

7.3.1.1b.8.3.5 Containment Instrument Gas - Safety-Related Instrumentation

The high pressure header for each train of containment instrument gas system bottles is monitored by a safety-grade pressure indication loop which reads out on a single dual-gauge indicator located on a main control room panel. This pressure instrumentation also provides a signal to the plant computer.

This system complies with the criteria of Regulatory Guide 1.97 for post-accident indication.

7.3.1.1b.8.4 Standby Power System

Descriptions of the standby power system and supporting system can be found in the following:

a) Refer to Subsection 8.3.1 for description of the diesel generators. Refer to Section 7.6.1b.3 for NSSS to non-NSSS diesel initiation signal.

b) Refer to Subsection 9.5.4 for Diesel Fuel Oil Storage and Transfer.

c) Refer to Subsection 9.5.5 for Diesel Generator Cooling Water System.

d) Refer to Subsection 9.5.6 for Diesel Generator Starting System.

e) Refer to Subsection 9.5.7 for Diesel Generator Lubrication System.

7.3.1.1b.8.5 Heating, Ventilating, and Air Conditioning Systems for ESF Areas

All H&V systems for ESF areas are actuated by the system they support.

7.3.1.1b.8.5.1 SGTS Equipment Room H&V System

For the description and operation of this system, refer to Subsection 9.4.1

7.3.1.1b.8.5.1.1 Initiating Circuits

Each fan of the SGTS Equipment Room H&V System may be initiated or stopped in a protective mode as follows:

a) High room temperature (lower of two high temperature setpoints) as detected by room thermostat will initiate the lead fan in "automatic" mode. The standby fan is also placed into service when the higher temperature setpoint is reached.

b) Low airflow at the common exhaust duct as detected by a flow sensor will trip the turning fan.

Capability for sensor checks and for test and calibration is provided as described in Subsection 7.3.2b-2-4.10.

7.3.1.1b.8.5.1.2 Logic and Sequencing

The ESFAS of the SGTS Equipment Room H & V System is a one-out-of-one logic.

7.3.1.1b.8.5.1.3 Interlocks

This system has no interlocks.

7.3.1.1b.8.5.1.4 Bypasses

The manual control switches for the fans in the SGTS Equipment room H&V System when in OFF position provide automatic input to the Bypass Indication System (BIS). See Section 7.5 for discussion of BIS.

The manual/automatic control of the 'A' SGTS Equipment Room Fan can be bypassed by manual operation at the Alternate Control Structure HVAC Control Panel. Operation of the fan from this panel provides input to the BIS.

7.3.1.1b.8.5.1.5 Redundancy

Controls and instrumentation are provided on a one-to-one basis with the mechanical equipment, so that the controls and instrumentation preserve the redundancy of the mechanical equipment. Equipment, controls, and instrumentation for the A fans belong to Division I and B fans to Division II.

7.3.1.1b.8.5.1.6 Diversity

Not applicable.

7.3.1.1b.8.5.1.7 Actuated Devices

The fan motors for this system are the only actuated devices.

7.3.1.1b.8.5.1.8 Separation

The instrumentation, controls, and power supply of the SGTS Equipment Room H&V system are redundant, and are physically and electrically separate in accordance with IEEE Std. 384-1974.

Redundant instrument sensors on the common duct are located on opposite sides of the duct to achieve separation in accordance with IEEE Std. 384-1974.

7.3.1.1b.8.5.1.9 Supporting Systems

The instrumentation and controls of the SGTS are powered from the Class 1E 125 VDC and 120 VAC systems. These electrical systems are discussed in Chapter 8.

7.3.1.1b.8.5.1.10 System Parts Not Required for Safety

The system parts not required for safety are the outputs to the control room annunciator systems and the local pressure differential indicators across the filters of the heating system.

7.3.1.1b.8.5.2 Diesel Generator Buildings' H&V Systems

For the description and operation of the Diesel Generator Buildings H&V Systems, refer to Subsection 9.4.7.

7.3.1.1b.8.5.2.1 Initiating Circuits

a) Diesel Generators A, B, C, D - Cooling Mode

Each of the four diesel generators has its own corresponding ventilation system and may be initiated or stopped as follows:

1) The starting of an associated diesel.

2) The initiation by the room thermostat.

3) Manual starting by a handswitch located in the back row panel of the main control room.

4) Tripping of the start-stop thermostat, once the diesel has been shut down and the room ambient temperature drops below the fan cut-out setting.

5) Manual stopping by a handswitch located in the main control room.

6) Manual starting by a handswitch located at a diesel generator's associated transfer panel (0C512A, B, C, D) when the diesel generator is replaced by a Diesel Generator 'E.'

7) Manual stopping by a handswitch located at a diesel generator's associated transfer panel (0C512A, B, C, D) when the diesel generator is replaced by Diesel Generator 'E.'

8) An additional temperature switch is provided in each diesel generator room to detect high-high room temperature resulting from fan control failure due to a fire in the control room. Detection of high-high temperature will actuate the switch causing transfer of controls from the control room circuit to this temperature actuated control circuit and automatically start the associated fan. This occurrence will also result in “fan trouble” annunciation in the control room. A low temperature setpoint is also provided to stop the fan after adequate cooling has occurred.

b) Diesel Generators A, B, C, D - Heating Mode

Each diesel generator room is maintained at a minimum of 72°F which is controlled by four thermostats that initiate the cycling of electric resistance heaters.

c) Diesel Generator 'E' - Cooling Mode

Diesel Generator 'E' has its own corresponding ventilation system and may be started or stopped as follows:

(1) Automatic starting initiated by the room thermostats.

(2) Manual starting by handswitches located on Panel 0C577E when Diesel Generator 'E' is not aligned to replace Diesel Generator A, B, C, or D.

(3) Manual stopping by handswitches located on Panel 0C577E when Diesel Generator 'E' is not aligned to replace Diesel Generator A, B, C, or D.

(4) Automatic stopping (trip) by the start-stop room thermostats, once the room ambient temperature drops below the fan cut-out setting.

(5) Manual starting by a handswitch located in the back row panel of the main control room when Diesel Generator 'E' is aligned to replace Diesel Generator A, B, C, or D.

(6) Manual stopping by a handswitch located in the back row panel of the main control room when Diesel Generator 'E' is aligned to replace Diesel Generator A, B, C, or D.

(7) Automatic stopping (trip) by the Smoke and Temperature Detection System if Diesel Generator 'E' is not aligned to an ESS Bus and in the Auto-Start mode of operation.

d) Diesel Generator 'E' Basement and Battery Room Ventilation System Cooling Mode.

Diesel Generator 'E' has a basement and battery room ventilation system that may be initiated or stopped as follows:

(1) Manual starting by a handswitch located on Panel 0C-577E.

(2) Manual stopping by a handswitch located on panel 0C-577E.

(3) Automatic stopping (trip) by the Smoke and Temperature Detection System if Diesel Generator 'E' is not aligned to an ESS Bus and in the Auto-Start mode of operation.

e) Diesel Generator 'E' - Heating Mode

Diesel Generator 'E' is maintained at a minimum temperature of 72° at elevation 708'-0" by six thermostats that initiate the cycling of six electric unit heaters.

Elevation 675'-6" is maintained at a minimum temperature of 72° by eight thermostats that initiate the cycling of eight electric unit heaters and by two thermostats that initiate the cycling of two electric baseboard heaters.

f) Diesel Generator 'E' Basement and Battery Room H&V System - Heating Mode

Diesel Generator 'E' Basement at elevation 656'-6" is maintained at a minimum of 60°F by five thermostats that initiate the cycling of five electric unit heaters and by four thermostats that initiate the cycling of four electric baseboard heaters. Diesel Generator 'E' also has a battery room located in the basement that is maintained at a minimum of 65°F by one thermostat located on the basement/battery room ventilation fan duct. The thermostat controls an electric baseboard heater for the battery room.

Capability for sensor checks and capability for test and calibration is provided as described in Subsection 7.3.2b.2-4.10.

7.3.1.1b.8.5.2.2 Logic and Sequencing

(a) Diesel Generators A, B, C, D

Once the diesel start signal is initiated, the associated ventilation fan also starts after a time delay and continues to run, until the diesel stops and the ambient room temperature drops below the thermostat cut-out setting. The intake, exhaust, and recirculation dampers are continually energized and will modulate to control the discharge air temperature.

If the room temperature exceeds 95°F while the diesel generator is not operating the fan will automatically start. These start signals will initiate the system, provided the selector switch is positioned in the auto-mode. If the diesel generator is aligned, its associated ventilation fan can be manually stopped or started from a handswitch located on a back row panel in the main control room.

(b) Diesel Generator 'E'

The heating and ventilating system for the Diesel Generator 'E' Building is designed to maintain a suitable environment for the diesel generator and its accessories during all modes of operation. Two (2) 50 percent capacity supply fans and two (2) 50 percent capacity exhaust fans are installed to ventilate the Diesel Generator 'E' Building. One supply fan and one exhaust fan operate in a pair with three modulating dampers (one supply, one exhaust, and one recirculation damper). A second pair of ventilating fans consists of one supply, one exhaust, and no modulating dampers.

The first pair of fans are started by a thermostat located on elevation 675'-6" and another on elevation 656'-6." The thermostats will start the first pair of fans when room temperature at either elevation exceeds 100°F and will stop the fans when ambient room temperatures drop below the thermostat's cut-out setting. The supply, exhaust, and recirculation dampers are continually energized and will nodulate to control the supply fan discharge air temperature at 95°F.

If the ambient room temperature on elevation 675'-6" (operating floor) increases to 110°, the second pair of supply and exhaust fans will start to provide additional cooling. The second pair of fans will stop on decreasing temperature of 100°F. The fans can be manually started and stopped in pairs by selector switches located on Panel 0C577E in the Diesel Generator 'E' Building if Diesel Generator 'E' is not aligned to replace Diesel Generator A, B, C, or D. If Diesel Generator 'E' is aligned to replace Diesel Generator A, B, C, or D, then all four ventilation fans can manually be stopped or started only from a selector switch located on a back row panel (0C681) in the main control room.

The Diesel Generator 'E' Basement and Battery Room ventilation fan is designed to run continuously to prevent hydrogen gas from accumulating in the battery room. The fan is not capable of being started automatically. A two-position switch on local Panel 0C577E is used to start or stop the fan. An alarm on 0C577E will annunciate whenever the Diesel Generator 'E' Basement and Battery Room Fan is not running.

7.3.1.1b.8.5.2.3 Interlocks

The building ventilation fans for Diesel Generators A, B, C, and D are interlocked with the respective diesel start. The Diesel Generator 'E' Building ventilation fans are not interlocked with the diesel start. They are, however, interlocked in pairs such that a supply and an exhaust fan will start and stop together.

7.3.1.1b.8.5.2.4 Bypasses

The manual control switches of the diesel generator buildings' ventilation systems when in the OFF position provide automatic input to the Bypass Indication System (BIS). See Section 7.5 for discussion of BIS.

7.3.1.1b.8.5.2.5 Redundancy

Individual redundancy is not required in the diesel generator buildings' ventilation systems since each diesel generator has its own ventilating system.

7.3.1.1b.8.5.2.6 Diversity

Not applicable.

7.3.1.1b.8.5.2.7 Actuated Devices
Refer to Subsection 9.4.7.

7.3.1.1b.8.5.2.8 Separation

The instrumentation, controls, and power supply of the Diesel Generator Buildings' Ventilation Systems are physically and electrically separate. Each system is located in a separate room with missile barrier designed walls between them, or in separate buildings.

7.3.1.1.b.8.5.2.9 Supporting Systems

The instrumentation and controls of the Diesel Generator Buildings' Ventilation Systems are powered from Class 1E 125 VDC and 120 VAC systems. These electrical systems are discussed in Chapter 8.0.

The diesel generator buildings' unit heaters and the basement ventilation fans that support the main ventilation system are discussed in Subsection 9.4.7.

7.3.1.1b.8.5.2.10 System Parts Not Required for Safety

The parts of the Diesel Generator Buildings' Ventilation Systems that are not required for safety are as follows:

(a) All electric heaters, see Subsection 9.4.7

(b) Instrumentation for monitoring airflow from the Diesel Generator Buildings' Ventilation Systems

(c) Instrumentation for alarming on the back row panel in the main control room of high, low, and high-high temperatures in the diesel generator room

(d) The Diesel Generator A-D Building basement ventilation fans and controls

7.3.1.1b.8.5.3 Engineered Safeguard Service Water Pumphouse Ventilation System

For the description and operation of the Engineered Safeguard Service Water (ESSW) Pumphouse H&V System, refer to Subsection 9.4.8.

7.3.1.1b.8.5.3.1 Initiating Circuits

(a) Cooling Mode

Each of the RHR and RHR emergency service water pumps has a corresponding ventilation system which may be initiated or stopped as follows:

(1) The starting of an associated service water pump

(2) The initiation by thermostat

(3) Manual starting

(4) Tripping of the start stop thermostat, once the associated service water pump has been shut down and the surrounding ambient temperature drops below the fan cut-out setting

(5) Manual stopping Capability for sensor checks and for test and calibration is provided as described in Subsection 7.3.2b.2-4.10

(6) An additional temperature switch initiates autostart of the ventilation fan should pump room temperature rise above high temperature setting in the event of loss of control from the control room due to a control room fire, and shuts off when the room temperature falls below the cutout setting.

7.3.1.1b.8.5.3.2 Logic and Sequencing

The pump start signal also initiates the vent fan and damper control. Fan and damper control are energized until the pump stops or until ambient temperature drops below the thermostat setting.

7.3.1.1b.8.5.3.3 Interlocks

The ESSW pumphouse ventilation systems are interlocked with the respective pump start signal.

7.3.1.1b.8.5.3.4 Bypasses

The manual control switches of the ESSW pumphouse ventilation system, when in the OFF position, provide automatic input to the Bypass Indication System (BIS). See Section 7.5 for a discussion of BIS.

7.3.1.1b.8.5.3.5 Redundancy

Instrumentation and controls are provided on a one-to-one basis with the mechanical equipment they control.

7.3.1.1b.8.5.3.6 Diversity

Not applicable.

7.3.1.1b.8.5.3.7 Actuated Devices

Refer to Subsection 9.4.8.

7.3.1.1b.8.5.3.8 Separation

The instrumentation, controls, and power supply of the ESSW pumphouse are divisionally separated. Two bays provide physical and electrical separation between Division I and Division II.

7.3.1.1b.8.5.3.9 Supporting Systems

The instrumentation and controls of the ESSW pumphouse ventilation system are powered from a Class 1E 120 VAC system. This electrical system is discussed in Chapter 8.

The ESSW pumphouse unit heaters support the ventilation system as discussed in Subsection 9.4.8.

7.3.1.1b.8.5.3.10 System Parts Not Required for Safety

The parts of the ESSW pumphouse ventilation system not required for safety are as follows:

(a) All electric unit heaters, see Subsection 9.4.8

(b) Instrumentation for monitoring airflow from the ESSW pumphouse ventilation system

(c) Instrumentation for alarming in the main control room of high-high and low-low temperatures in the ESSW pumphouse

7.3.1.1b.8.5.4 ESF Switchgear (SWGR) Rooms Cooling System

For the description of operation of the above system refer to Subsection 9.4.2.2.

7.3.1.1b.8.5.4.1 Initiating Circuits

Each cooling unit of the Emergency SWGR Rooms Cooling System may be initiated or stopped as follows:

(a) Low airflow in the common cooling air duct, as detected by a flow sensing switch in the redundant (standby) cooling system, will initiate the standby unit.

(b) High air temperature in the common cooling air duct, as detected by a temperature sensing switch in the standby cooling system, will initiate the standby unit.

(c) On Unit 1 a separate temperature switch will isolate control circuits of Emergency Switchgear And Load Center Room Cooling Equipment from the Control Room and initiate an autostart of the A(B) Emergency Switchgear And Load Center Room Cooling Equipment upon a high room temperature provided the respective Division Control Structure Chilled Water Circulation Pump is running. It will shut off when room temperature falls below the cutout setting. This will provide cooling in the event that the existing control circuits for the Emergency Switchgear Room And Load Center Cooling System are disabled during a Control Room fire.

(d) On Unit 2 a separate temperature switch will isolate control circuits of Emergency Switchgear Room Cooling Equipment from the Control Room and initiate an autostart of the A Emergency Switchgear Room Cooling Equipment upon a high room temperature and shuts off when room temperature falls below the cutout setting. Interlocks are provided in the fan control circuit to prevent it from starting until the compressor is running. This will

provide cooling in the event that the existing control circuits for the Emergency Switchgear room cooling system are disabled during a Control Room fire.

When the standby unit is initiated, the running unit is tripped.

Capability for sensor checks and for test and calibration is provided as described in Subsection 7.3.2b.2.2-4.10.

7.3.1.1b.8.5.4.2 Logic and Sequencing

The two redundant cooling units are normally set up in a "lead-lag" fashion. The lead unit is started manually, while the other unit is on standby. The system is used for both normal and emergency operation. The lead unit continues to run after an emergency condition unless stopped as described above.

In that event, the standby unit will automatically start. During the system safety-related operation emergency power supply (see Chapter 8.0) is used. In both Unit 1 and Unit 2, the SWGR room cooler's cooling coils for normal operation are cooled by the Reactor Building Chilled Water System. In Unit 1, the cooler's emergency cooling coils are cooled by the Control Structure Chilled Water System. In Unit 2, the cooler's emergency cooling coils are cooled by direct expansion refrigeration units which are in turn cooled by the Emergency Service Water System.

7.3.1.1b.8.5.4.3 Interlocks

The flow switches and temperature switches, located in the system common discharge duct, are interlocked with the respective fan.

7.3.1.1b.8.5.4.4 Bypasses

The manual control switches of each cooler fan when in OFF position provide automatic input to the Bypass Indication System (BIS). See Section 7.5 for complete discussion of BIS.

7.3.1.1b.8.5.4.5 Redundancy

Controls and instrumentation are provided on a one-to-one basis with the mechanical equipment, so that the controls and instrumentation preserve the redundancy of the mechanical equipment. Equipment, controls, and instrumentation of unit cooler A belong to Division I, and unit cooler B to Division II.

7.3.1.1b.8.5.4.6 Diversity

Not applicable.

7.3.1.1b.8.5.4.7 Actuated Devices

None of the Emergency SWGR Rooms Cooling System equipment is actuated by any of the ESFAS control signals. The system's operation is described in Subsection 9.4.2.2.

7.3.1.1b.8.5.4.8 Separation

The instrumentation, controls, and power supply are redundant and physically and electrically separate.

Redundant instrument sensors on the common duct are located on opposite sides of the duct to achieve separation in accordance with IEEE Std. 384-1974.

7.3.1.1b.8.5.4.9 Supporting Systems

The instrumentation and controls are powered from the Class 1E 125 VDC and 120 VAC systems. These electrical systems are discussed in Chapter 8.0.

7.3.1.1b.8.5.4.10 System Parts Not Required for Safety

System discharge air temperature control loop, including chilled water control valve and chilled water cooling coils, are the only parts of the system not required for safety.

7.3.1.1b.8.5.5 Emergency Core Cooling Systems (ECCS) Unit Coolers
For the description and operation of the ECCS unit coolers, see Subsection 9.4.2.2.

7.3.1.1b.8.5.5.1 Initiating Circuits

The unit coolers may be initiated or stopped as follows:

(a) RHR and Core Spray Pump Rooms Unit Coolers

(1) Respective pump start or stop signal

(2) Each unit cooler is also provided with a hand switch in the control room for manual operation.

(3) An additional temperature switch is provided in the RHR pump room to detect high room temperature resulting from fan control failure due to a fire in the control room. Detection of high temperature results in the automatic start the “B” unit cooler in the RHR pump room (“A” unit cooler for the Unit 2 RHR pump room) while simultaneously isolating the control room controls from the fan starter circuits. A low temperature setpoint is also provided to stop the fans after adequate cooling has occurred.

(b) HPCI and RCIC Pump Rooms Unit Coolers

(1) High lead cooler discharge air temperature will initiate the standby cooler.

(2) A signal to open steam stop valve RCIC pump turbine will initiate the lead RCIC unit cooler.

(3) A position signal on HPCI pump turbine stop valve will initiate the lead HPCI unit cooler, when the valve is opened.

(4) Each unit cooler is also provided with a hand switch in the control room for manual operation.

(5) An additional temperature switch is provided in the RCIC pump room to detect high room temperature resulting from fan control failure due to a fire in the control room. Detection of high temperature results in the automatic start of the “B” fan in the RCIC pump while simultaneously isolating the control room controls from the fan starter circuits. A low temperature setpoint is also provided to stop the fans after adequate cooling has occurred.

Capability for sensor checks and for test and calibration is provided as described in Subsection 7.3.2b.2-4.10.

7.3.1.1b.8.5.5.2 Logic and Sequencing

a) RHR and Core Spray Pump Rooms Unit Coolers

Each cooler is assigned on a one-to-one basis to a pump. When the pump start signal exists, the fan automatically starts.

A flow switch monitors the fan's operation. If the fan fails and the unit cooler loses the flow, an alarm will be annunciated in the main control room.

b) HPCI and RCIC Pump Rooms Unit Coolers

Two redundant unit coolers are set up in a lead-lag fashion. When an ECCS pump start signal exists, the lead fan of the respective pair of unit coolers automatically starts and the other fan remains on standby. The standby fan temperature switch monitors the operation of the lead cooler. If the lead cooler fails to deliver cooling air at the temperature below setting of the temperature switch, the standby cooler will start.

Except for the flow switches and temperature switches, no other instruments or instrument loops are provided for the unit cooler.

7.3.1.1b.8.5.5.3 Interlocks

Each RHR and core spray pump rooms unit cooler is interlocked with a respective pump on a one-to-one basis.

7.3.1.1b.8.5.5.4 Bypass

Based on maintenance practices, indication in the Bypass Indication System (BIS) is not required per Regulatory Guide 1.47. See Section 7.5 for discussion of BIS.

7.3.1.1b.8.5.5.5 Redundancy

Instruments are provided on one-to-one basis with the mechanical equipment they serve.

With RHR and core spray unit coolers, instrumentation and coolers A and C belong to Division I, and instrumentation and coolers B and D to Division II.

RCIC pump room unit coolers and their instrumentation belong to Division I, and HPCI coolers and their instrumentation to Division II.

7.3.1.1b.8.5.5.6 Diversity

Not applicable.

7.3.1.1b.8.5.5.7 Actuated Devices

Only fans of the unit coolers are actuated.

7.3.1.1b.8.5.5.8 Separation

Instrumentation and power supply belong to and separated into the same divisions as the pumps the unit coolers serve.

7.3.1.1b.8.5.5.9 Supporting Systems

The instruments are powered from the Class 1E 120 VAC systems. These systems are discussed in Chapter 8.

7.3.1.1b.8.5.5.10 System Parts Not Required for Safety

The flow switches for RHR and core spray pump room unit coolers are the only parts of the system not required for safety. Their function is to alarm in the main control room the loss of air flow.

7.3.1.1b.8.5.6 Drywell Unit Coolers and CRD Area Recirculating Fans

For the description and operation of the drywell unit coolers and CRD area recirculation fans, see Subsection 9.4.5.

7.3.1.1b.8.5.6.1 Initiating Circuits

All drywell unit coolers and CRD area recirculation fans are stopped by a LOCA signal. Low airflow in the lead unit or high temperature will initiate the standby unit cooler and CRD area recirculation fan, only during non safety-related, high speed, mode of operation. Capability for sensor checks and for test and calibration is provided as described in Subsection 7.3.2b.2-4.10.

7.3.1.1b.8.5.6.2 Logic and Sequencing

Each pair of unit coolers and CRD area recirculation fans is set up in a "lead-lag" fashion. When high drywell pressure exists, all the running coolers and CRD area recirculation fan are automatically stopped. Then, the safety-related unit coolers and fan can be manually started, at low speed, from the back row panel in main control room to provide mixing of the containment atmosphere. During the plant normal operation, the standby cooler and CRD area recirculation fan pressure flow switch monitors fan operation. If the lead fan loses airflow, the standby fan will start. The flow switch is non safety-related. Any cooler or CRD area recirculation fan, once manually started in the safety-related mode, can only be manually stopped. The flow switch no-flow-signal will not affect cooler's and CRD area recirculation fan's operation.

7.3.1.1b.8.5.6.3 Interlocks

See logic and sequencing.

7.3.1.1b.8.5.6.4 Bypass

The hand control switches of each cooler and CRD area recirculation fan, when in OFF position, provide automatic input to the Bypass Indication System (BIS). See Section 7.5 for discussion of BIS.

7.3.1.1b.8.5.6.5 Redundancy

Controls and instrumentation are provided on one-to-one basis with the mechanical equipment they serve.

7.3.1.1b.8.5.6.6 Diversity

Not applicable.

7.3.1.1b.8.5.6.7 Actuated Devices

Refer to Subsection 9.4.5.

7.3.1.1b.8.5.6.8 Separation

The instrumentation, controls, and power supply are physically and electrically separate.

7.3.1.1b.8.5.6.9 Supporting Systems

Except for flow switches, the control system is powered from the Class 1E 120 VAC system.

7.3.1.1b.8.5.6.10 System Parts Not Required for Safety

Flow switches and the cooler inlet and outlet temperature monitoring subsystem are the only parts of the system not required for safety.

7.3.1.1b.8.5.7 Control Structure Chilled Water System (CSCWS)

For description and operation of the CSCWS, refer to Subsection 9.2.12.

7.3.1.1b.8.5.7.1 Initiating Circuits

Each CSCWS loop may be initiated or stopped as follows:

a) Manual starting and stopping

b) Low flow in the chilled water operating loop initiates the standby loop

c) High return air temperatures, in any of the following H&V systems, will trip the operating chilled water loop and initiate the standby loop:

    1) Main control room
    2) Computer room
    3) Control structure

d) Failure of the emergency condenser water circulating pump will trip the associated chilled water circulating loop

e) Failure of a chiller will trip the entire associated loop

f) Fan failure of any of the following H&V systems will trip the associated chiller loop:

    1) Main control room
    2) Computer room
    3) Control structure
    4) Emergency switchgear and load center room - Unit 1 (Emergency operations only)

Capability for test and calibration is provided as described in Subsection 7.3.2b.2-4.10.

7.3.1.1b.8.5.7.2 Logic and Sequencing

The chilled water circulating pump loops are the controlling components for the control structure chilled water system.

Once a chilled water circulating pump is running and flow is detected, the condenser water circulating pump is initiated along with a solenoid valve, which allows air pressure to control the condensing water temperature mixing valve. Initiating signals from indication of flow in both the chilled water and condensing water loops will start the associated chiller, providing that the chiller's internal permissives such as low oil pressure are not present. Once the system is in operation, the chiller's capacity control system will modulate the compressor's inlet vane, controlling the amount of refrigerant flow to maintain a constant chilled water temperature.

In the event of any of the following input signals, the emergency condenser water circulating pump (ECWCP) associated with the operating chilled water loop will start:

a) LOCA, Unit 1
b) LOCA, Unit 2
c) Loss of offsite power

Upon initiation of the ECWCP, the following functions will occur:

a) Energize the emergency condenser water temperature control valve
b) Energize (open) the emergency service water return valve
c) Trip the condenser water circulating pump

Upon low flow of emergency condenser water, the main control room alarm is actuated and the chilled water circulation pump is tripped, which in turn sequences off the entire operating loop and initiates the standby loop.

A manual switch located on a back row panel in the main control room can start the emergency condenser water circulating pumps for testing purposes whenever the corresponding emergency service water loop operating.

7.3.1.1b.8.5.7.3 Interlocks

The CSCWS is interlocked with the following airflow systems:

a) Main control room
b) Computer room
c) Control structure
d) Emergency switchgear and load center room - Unit 1 (Emergency operations only)

7.3.1.1b.8.5.7.4 Bypasses

The manual control switches for the chilled water circulating pumps when in the OFF position provide automatic input to the Bypass Indication System (BIS). See Section 7.5 for discussion of BIS.

The manual/automatic control of the 'A' Train (loop) of CSCWS can be bypassed by manual operation at the Alternate Control Structure HVAC Control Panel. Operation from this panel would provide input to BIS.

7.3.1.1b.8.5.7.5 Redundancy

Controls and instrumentation are provided on a one-to-one basis with the mechanical equipment they serve. Equipment, controls, and instrumentation of chilled water loop A belong to Division I and chilled water loop B to Division II.

7.3.1.1b.8.5.7.6 Diversity

Not applicable.

7.3.1.1b.8.5.7.7 Actuated Devices

Refer to Subsection 9.2.12.

7.3.1.1b.8.5.7.8 Separation

The instrumentation, controls, and power supply of the CSCWS are physically and electrically separate. Redundant local control panels of the CSCWS are physically separate.

7.3.1.1b.8.5.7.9 Supporting Systems

The instrumentation and controls of the CSCWS are powered from the Class 1E 125 VDC and 120 VAC systems. These electrical systems are discussed in Chapter 8.

7.3.1.1b.8.5.7.10 System Parts Not Required for Safety

The parts of the CSCW not required for safety are as follows:

a) The service water piping and associated condenser water circulating system (pump, valves, piping, and instrumentation)

b) Pipe mounted temperature and pressure indicators

7.3.1.1b.9 Containment Atmosphere Control

The valves within these systems are a subset of those listed in Table 6.2-12 (Containment Penetration Data) and are identified by XV-157YY. Many of these valves have timers as described in section 7.3.1.1b.1.3.

The LOCA isolation signal to four of these valves (two per division) may be bypassed by keylocked hand switches for the purpose of venting either the Drywell or the Suppression Chamber to the SGTS in the event of a false LOCA during startup.

Fifteen of these valves are independently isolated by High High Radiation signals (one per division) from detectors located in the SGTS exhaust. Four of these valves are provided with High High Radiation isolation signal overrides by means of keylocked hand switches.

7.3.1.2 IEEE 279-1971 Design Basis Information

Design basis information as required by Section 3 of IEEE 279-1971 is provided below for NSSS and non-NSSS as required for the protection systems listed and described in the preceding sections.

7.3.1.2.1 Conditions

a. NSSS

The plant conditions which require protective action involving the systems of this section and other sections are examined and presented in Chapter 15 and Appendix 15A.

b. Non-NSSS

Non-NSSS ESF systems as listed in Subsection 7.3.1 provide protective action in response to the following plant conditions:

Reactor Water Level

Primary Containment Pressure

Radiation (at outside air intake)

Radiation (plant gaseous effluents)

7.3.1.2.2 Variables

a. NSSS

The plant variables which require monitoring to provide protective actions are identified in the Tables 7.3-1, 7.3-2, 7.3-3, 7.3-4 for ECCS and Table 7.3-5 for containment isolation function. For other ESF described, refer to the individual system discussions or to Chapter 15 where safety analysis parameters for each event are cited.

b. Non-NSSS

Variables required to be monitored in order to provide non-NSSS ESF action are as follows:

NSSS reactor water level and primary containment pressure variables constitute a LOCA signal used for Primary Containment Isolation (refer to Table 6.2-12); Secondary Containment Isolation, and Secondary Containment Recirculation and Standby Gas Treatment System initiation. Also refer to 7.3.1.1a.

Radiation (outside air intake) is used for control room isolation and initiation of the Emergency Outside Air Supply System (EOASS). Refer to Table 11.5-1.

Radiation (SGTS exhaust) is used for Primary Containment Purge Vent valve isolation. Refer to Section 11.5.

Radiation (plant gaseous effluents) is used for Secondary Containment Isolation. Refer to Table 11.5-1.

7.3.1.2.3 Numbers of Sensors and Location

a. NSSS

Minimum number of sensors required to monitor safety-related variables are provided in Technical Specifications. There are no sensors in the PCRVICS or ECCS which have a spatial dependence. Therefore, location information is not relevant.

b. Non-NSSS

Minimum sensors required are noted in sections and tables describing the systems as follows:

Reactor water level and primary containment pressure are provided with NSSS and are described in 7.3.1.1a and Table 7.3-5.

Radiation (outside air intake) is provided by the NSSS supplier and is described in Table 11.5-1. Number and locations are defined under non-NSSS responsibility.

Radiation (plant gaseous effluents) are provided by the NSSS supplier and is described in Table 11.5-1. Number and locations are defined under non-NSSS responsibility.

7.3.1.2.4 Operational Limits

a. NSSS

Prudent operational limits for each safety-related variable trip setting are selected to be far enough above or below normal operating levels so that a spurious isolation or ECCS initiation is avoided. It is then verified by analysis that the release of radioactive materials, following postulated gross failures of the fuel or the RCPB is kept within an acceptable bounds. Design basis operational limits (Allowable Values), as listed in the plant Technical Specifications for the PCRVICS and the ECCS, are based on operating experience and constrained by the safety design basis and the safety analyses.

b. Non-NSSS

Non-NSSS systems use the operational limits for the variables as follows:

Reactor water level and primary containment pressure - refer to Subsection 7.3.1.2.3 and the plant Technical Specifications.
Radiation (intake) - refer to the plant Technical Specifications.

Radiation (Reactor Building Isolation) - refer to the plant Technical Specifications.

7.3.1.2.5 Margin Between Operational Limits

a. NSSS

The margin between operational limits (i.e., trip setpoints) and the limiting conditions of operation (i.e., Allowable Values) for the PCRVICS parameters as listed in Table 7.3-5 and those listed in Tables 7.3-1 through 7.3-4 for the ECCS includes consideration of the setpoint drift. The margin between the Allowable Value and the Analytical Limit includes consideration of the accuracy. (See Tables 7.3-29 and 7.3-30 for response times). Annunciators are actuated at the setpoints to alert the reactor operator of the onset of unsafe conditions.

b. Non-NSSS

Reactor water level and containment pressure - refer to Subsection 7.3.1.2.5(a)

Radiation trip levels will be below Allowable Values established in the Technical Specifications

7.3.1.2.6 Levels Requiring Protective Action

a. NSSS

Tables 7.3-5 (PCRVICS) and 7.3-1 through 7.3-4 (ECCS) provide information of the Instrument functions, Instrument/sensor type, Instrument range and Number of channels provided. Refer to the Technical Requirements Manual for the trip setpoints; and the plant Technical Specifications for the Allowable Values.

b. Non-NSSS

Refer to the Technical Requirements Manual.

7.3.1.2.7 Range of Energy Supply and Environmental Conditions of Safety Systems

See Section 3.11 and the Susquehanna SES Environmental Qualification Program for Class 1E Equipment for environmental conditions, and Chapter 8 for the range of energy supply. PCRVICS channel, logic and main steamline isolation valve 120 VAC power is provided by the reactor protection system high inertia MG sets. Voltage regulation is designed to respond to a step load change of 50% of rated load with an output voltage change of not more than 15%. The flywheel on each MG set provides stored energy to maintain voltage and frequency within 5% of rated value for 1 second, preventing momentary switchyard transients from causing a scram. PCRVICS relays will operate without failure within the range of +10% of rated voltage. An alternate source of 120 volt power is provided to each RPS bus. This unregulated alternate power is provided for the RPS bus when maintenance is required for an MG set.

125 VDC power is provided by the Class 1E station batteries. 120 VAC power is provided by the Class 1E instrument AC system. Motive power is provided by class 1E power systems.

7.3.1.2.8 Malfunctions, Accidents, and Other Unusual Events Which Could Cause Damage to Safety System

Chapter 15 describes the following credible accidents and events; LOCA, pipe break outside containment, and feedwater line break. The remaining accidents and events are described in the FSAR as indicated.

Floods

The buildings containing ESF components have been designed to meet the PMF (Probable Maximum Flood) at the Susquehanna SES site. This ensures that the buildings will remain watertight under PMF including wind generated wave action and wave runup.

Refer to Subsection 3.4.1.

Storms and Tornadoes

The buildings containing ESF components have been designed to withstand the meteorological events described in Subsection 3.3.2.

Earthquakes

The structures containing ESF components have been seismically qualified as described in Sections 3.7 and 3.8, and will remain functional during and following a safe shutdown earthquake (SSE).

Fires

To protect the ESF in the event of a postulated fire, the redundant portions of the systems are separated by fire barriers. If a fire were to occur within one of the sections or in the area of one of the panels, the PCRVICS and ECCS functions would not be prevented by the fire. The use of separation and fire barriers ensures that even though some portion of the systems may be affected, the PCRVICS and ECCS will continue to provide the required protective action. A fire detection system using heat detectors and product of combustion detectors is provided in PGCC floor sections and in panels containing ESF systems mounted on these floor sections. A Halon fire suppression system is provided in the same areas.

Refer to Subsection 9.5.1.1 for further fire protection discussion.

LOCA

The following PCRVICS and ECCS system components which are located inside the drywell are functionally required during and following a loss-of-coolant accident (LOCA):

1) Reactor vessel pressure and reactor vessel water level instrument taps and sensing lines, which terminate outside the drywell

2) The MSIV safety/relief valves and recirculation discharge valve actuators, actuated equipment and cables

These items have been environmentally qualified to remain functional during and following a LOCA as discussed in Section 3.11.

Pipe Break Outside Secondary Containment

This condition will not prevent the ESF from performing their safety functions.

Feedwater Break

This condition will not prevent the ESF from performing their safety functions.

7.3.1.2.9 Minimum Performance Requirements

a. NSSS

(See Table 7.3-5 for PCRVICS which provides information of the Instrument functions, Instrument/sensor type, Instrument range and Number of channels provided.)

Within ECCS, performance requirements refer only to a system as a whole and not specifically to individual components except in the area of accuracy (see Tables 7.3-1 through 7.3-4 which provide information of the Instrument functions, Instrument/sensor type, Instrument range and Number of channels provided.).

b. Non-NSSS

Reactor water level and containment pressure are discussed in Subsection 7.3.1.2.9(a). Radiation detection response times are not applicable; ranges are provided in Table 11.5-1. Instrument accuracy is maintained by calibration per as requirement of the Technical Specifications. Calibration per the Technical Specifications.

7.3.1.3 Final System Drawings

The final system drawings including:

a. Piping and Instrumentation Diagrams (P&ID)

b. Functional Control Diagrams (FCD)

have been provided for the ESF in this section.

Logic, schematic, electrical interconnection will be supplied under separate cover. Table 1.7-1 lists the drawings to be supplied.

7.3.2 ANALYSIS

7.3.2a Analysis of ESFAS Supplied with the NSSS

7.3.2a.1 Emergency Core Cooling Systems - Instrumentation and Controls

7.3.2a.1.1 General Functional Requirement Conformance

Chapters 15.0 and 6.0 evaluate the individual and combined capabilities of the ECCS. For the entire range of RCPB break sizes, the cooling systems prevent excessive fuel cladding temperatures.

Instrumentation for the ECCS must respond to the potential inadequacy of core cooling regardless of the location of a breach in the RCPB. Such a breach inside or outside the containment is sensed by reactor low water level. The reactor vessel low water level signal is the only ECCS initiating function that is completely independent of breach location. Consequently, it can actuate HPCI. It can also initiate CS and LPCI with a low reactor pressure permissive present.

The other major initiating function, drywell high pressure, is provided because pressurization of the drywell will result from any significant RCPB breach anywhere inside the drywell.

Initiation of the ADS which employs both reactor vessel low water level and drywell high pressure in coincidence, requires that the RCPB breach be inside the drywell. This control arrangement is satisfactory in view of the automatic isolation of the reactor vessel for breaches outside the drywell and because the automatic depressurization system is required only if the HPCI fails.

An evaluation of ECCS controls show that no operator action is required to initiate the correct responses of the ECCS. However, the control room operator can manually initiate every essential operation of the ECCS. Alarms and indications in the control room allow the operator to assess situations that requires the ECCS and verify the responses of each system. This arrangement limits safety dependence on operator judgment, and design of the ECCS control equipment has appropriately limited response.

The redundance of the control equipment for the ECCS is consistent with the redundancy of the cooling systems themselves. The arrangement of the initiating signals for the ECCS, as shown in Figures 7.3-5 and 7.3-6, is also consistent with the arrangement of the systems themselves.

No failure of a single initiating trip channel can prevent the start of the cooling systems when required or inadvertently initiate these same systems.

An evaluation of the control schemes for each ECCS component shows that no single control failure can prevent the combined cooling systems from providing the core with adequate cooling. In performing this evaluation the redundancy of components and cooling systems was considered.

The control arrangement used for the ADS is designed to avoid spurious actuation. The ADS relief valves are controlled by two trip systems. The conditions indicated by the table result in both trip systems always remaining capable of initiating automatic depressurization. If an inoperable sensor is in the tripped state or if a synthetic trip signal is inserted in the control circuitry, automatic depressurization can be initiated when the other initiating signals are received.

The only equipment protective devices that can interrupt planned ECCS operation are those that must act to prevent complete failure of the component or system. In no case can the action of a protective device prevent other redundant cooling systems from providing adequate cooling to the core.

The controls that adjust or interrupt operation of ECCS and subsystems are located in the control structure and are under administrative control of the operators.

The components located inside the drywell and essential to ECCS performance are designed to operate in the drywell environment resulting from a LOCA. Essential instruments located outside the drywell are also qualified for the environment in which they must perform their essential function.

Capability for emergency core cooling following a postulated accident may be verified by observing the following indications:

(1) annunciators for HPCI, CS, LPCI and ADS sensor initiation logic trips

(2) flow and pressure indications for each emergency core cooling system

(3) isolation valve position lights indicating open valves

(4) injection valve position lights indicating either open or closed valves

(5) relief valve initiation circuit status by open-closed indicator lamps

(6) relief valve position may be inferred from reactor pressure indications

(7) relief valve discharge pipe temperature monitors and alarm

7.3.2a.1.2 Specific Regulatory Requirements Conformance

7.3.2a.1.2.1 Regulatory Guides

7.3.2a.1.2.1.1 Regulatory Guide 1.6 (1971)

See Subsection 8.1.6.1, paragraph a.

7.3.2a.1.2.1.2 Regulatory Guide 1.11 (1971)

Instrument lines have automatic or remote-manual isolation.

7.3.2a.1.2.1.3 Regulatory Guide 1.22 (1972)

Conformance to this regulatory guide is achieved by providing system level indication when the system is rendered inoperable for test or maintenance except for position D.3.b of the guide which is clarified and amplified in the compliance analysis for Regulatory Guide 1.47-1973. Facilities for testing are provided so that the equipment can be operated in various test modes to confirm that it will operate properly when called upon. Testing incorporates all elements of the system under one test mode or another, including sensors, logic, actuators, and actuated equipment. The testing is planned to be performed at intervals so that there is an extremely low probability of failure in the periods between tests. During testing there are always enough channels and systems available for operation to provide proper protection.

7.3.2a.1.2.1.4 Regulatory Guide 1.29 (1976)

Instrumentation is classified as Seismic Category I as discussed in Section 3.10.

7.3.2a.1.2.1.5 Regulatory Guide 1.30 (1972)

Refer to Section 3.13.

7.3.2a.1.2.1.6 Regulatory Guide 1.32 (1972)

Conformance is described in the conformance to General Design Criterion 17 and Industry Standard IEEE 308-1971.

7.3.2a.1.2.1.7 Regulatory Guide 1.47 (1973)

Regulatory Position C.1, C.2 and C.3
Indication is provided in the main control room to inform the operator that a system is inoperable. Annunciation is provided to indicate that either a system or a part of a system is not operable. For example, the ECCS system have annunciator alarms whenever one or more channels of an input variable are bypassed. Instruments which form part of a one-out-of-two-twice logic and can be removed from service for calibration. Removal of the instrument from service will be indicated in the control room as a single instrument channel trip. Each subsystem within the ECCS Network is provided with an automatically or operator initiated system level bypass and inoperability annunciator located in the control room.

Regulatory Position C.4

Capability for manual initiation of the ECCS system level bypass and inoperability indication is provided by activation of a control switch located in the main control room. This may be used to provide administrative control of the bypass indication for those bypasses or inoperabilities which cannot be automatically indicated. A control switch is provided for each system level bypass indicator.

The importance of providing accurate information for the reactor operator and reducing the possibility for the indicating equipment to adversely affect its monitored safety system are discussed in the following paragraphs:

(1) Individual indicators are arranged together on the control room panel to indicate what function of the system is out of service, bypassed or otherwise inoperable. All bypass and inoperability indicators, both at a system level and component level, will be grouped only with those items that will prevent a system from operating if needed.

(2) As a result of design, preop testing and startup testing, no erroneous bypass indication is anticipated.

(3) These indication provisions serve to supplement administrative controls and aid the operator in assessing the availability of component and system level protective actions. This indication has no safety-related functions.

(4) All circuits will be electrically independent of the plant safety systems to prevent the possibility of adverse effects. The annunciator initiation signals cannot prevent required protective actions.

(5) Each indicator can be individually tested.

7.3.2a.1.2.1.8 Regulatory Guide 1.53 (1973)

Compliance with NRC Regulatory Guide I.53-1973 is achieved by specifying, designing, and constructing the ECCS so that they meet the single failure criterion described in Paragraph 4.2 of IEEE 279-1971 and IEEE 379-1972. Redundant sensors are used, and the logic is arranged to insure that a failure in a sensing element or the decision logic or an actuator will neither prevent nor spuriously initiate protective action. Separated channels are employed, so that a fault affecting one channel will not prevent the other channels from operating properly. Specifications are provided to define channel separation for wiring not included with NSSS supplier supplied equipment.

7.3.2a.1.2.1.9 Regulatory Guide 1.62 (1973)

Means are provided for manual initiation of ECCS at the system level through the following armed pushbutton switches:

(1)	HPCI:	one switch in Division 2
(2)	ADS A:	two switches in Division 1
(3)	ADS B:	two switches in Division 2
(4)	CS A/CS C:	one switch in Division 1
(5)	CS B/CS D:	one switch in Division 2
(6)	RHR A/RHR C:	one switch in Division 1
(7)	RHR B/RHR D:	one switch in Division 2

These switches are located on a main control room panel in the designated ECCS division portions of that panel.

The amount of equipment common to initiation of both manual and automatic emergency core cooling is kept to a minimum through implementation of manual initiation (operation of armed pushbutton) of emergency core cooling at the final devices (relays) of the protection system. No single failure in the manual, automatic or common portions of the protection system will prevent initiation of a sufficient amount of emergency core cooling equipment by manual or automatic means.

In order to prevent manual initiation of vessel depressurization when low pressure core cooling capability is absent, the ADS manual initiation has an interlock to assure proper conditions for depressurization (AC Interlock). One interlock is provided for Division 1 ADS and a second independent interlock is provided for Division 2 ADS.

Manual initiation of emergency core cooling, once initiated, goes to completion as required by IEEE 279-1971 paragraph 4.16.

7.3.2a.1.2.1.10 Regulatory Guide 1.75 (1974)

Refer to Subsection 7.1.2.5.8.

7.3.2a.1.2.2 10CFR50, Appendix A

(1) Criterion No. 5

Emergency power supplies are shared between Susquehanna Unit 1 and 2. Interlocks are provided so that required safety functions are adequately performed in the event of an accident in one Unit, and so that orderly, safe shutdown and cooldown functions are adequately performed in the other Unit.

(2) Criterion No. 13

Conformance to this requirement is achieved by monitoring appropriate variables over the range expected and providing containment isolation, emergency core cooling, and other functions to maintain the variables within the prescribed ranges.

(3) Criteria 17 and 18

See Subsection 8.3.1.11.1 and 8.3.2.2.1

(4) Criteria 19 through 24, 29, 35, and 37

Conformance to these criteria are shown in Subsections 7.3.1.1a.1.3, 7.3.1.1a.1.4, 7.3.1.1a.1.5 and 7.3.1.1a.1.6. See also Section 3.1.

7.3.2a.1.2.3 Industry Standards

7.3.2a.1.2.3.1 IEEE 279-1971 Criteria for Protection Systems for Nuclear Power Generating Stations

Compliance of the ECCS with IEEE 279-1971 is detailed below.

7.3.2a.1.2.3.1.1 General Functional Requirement (IEEE 279-1971, Paragraph 4.1)

Automatic initiation of the ECCS is provided from sensors measuring reactor vessel low water level and drywell high pressure. The following systems are individually initiated by automatic means:

(1) HPCI

(2) ADS

(3) CS

(4) LPCI mode of the RHR system

This automatic initiation is accomplished with precision and reliability commensurate with the overall ECCS objective and is effective over the full range of environmental conditions depicted below:

(1) Power supply voltages

HPCI: Tolerance is provided to complete loss of station AC power, but not loss of the DC source of power for the HPCI system.

ADS: Tolerance is provided to complete loss of station AC power, but not to loss of both DC sources for ADS.

CS: Tolerance is provided to complete loss of AC or DC power within one division, but not loss of power to both divisions.

LPCI: Tolerance is provided to AC power supply failure such that failures cannot negate successful low pressure cooling. DC power supply failure will affect only one of the two LPCI Divisions.

(2) Power supply frequency

HPCI: No AC controls are used.

ADS: No AC controls are used.

CS: Excessive frequency reduction is indicative of an onsite power supply failure and equipment shutdown in that division is required.

LPCI: Excessive frequency reduction is indicative of an onsite power supply failure and equipment shutdown in that division is required.

(3) Temperature

HPCI, ADS, CS, and LPCI:

Operable at all temperatures that can result from LOCA. See Section 3.11.

(4) Humidity

HPCI, ADS, CS, and LPCI:

Operable at humidities, including steam, that can result from a LOCA. See Section 3.11.

(5) Pressure

HPCI, ADS, CS, and LPCI:

Operable at all pressures resulting from a LOCA as required. See Section 3.11.

(6) Vibration

HPCI, ADS, CS, and LPCI:

Tolerance to conditions stated in Section 3.10.

(7) Malfunctions

Overall ECCS:

Network tolerance to any single component failure to operate on command.

(8) Accidents

HPCI, ADS, CS, and LPCI:

Network tolerance to all design basis accident without malfunction.

(9) Fire

HPCI:

Tolerance to single raceway fire or mechanical damage of the initiation sensors but not the control cabinet outputs.

Overall ECCS:

Network tolerance to single raceway fires or mechanical damage.

(10) Explosion

HPCI, ADS, CS, and LPCI:

Explosions are not defined in design bases.

(11) Missiles

HPCI: Tolerance to any single missile destroying no more than one pipe or raceway to the initiation sensors.

ADS:

Separate routing of the ADS conduits within the drywell reduces to a very low probability the potential for missile damage to more than one conduit to ADS or damage to the pilot solenoid assemblies of ADS valves.

Overall ECCS:

Network tolerance to any single missile destroying no more than one pipe, raceway, equipment or cabinet.

(12) Lightning

HPCI and ADS:

Ungrounded DC system not subject to lightning strikes.

CS and LPCI:

Tolerance to lightning damage limited to one auxiliary bus system. See comments under (1) and (2).

(13) Flood

HPCI, ADS, CS, and LPCI:

All control equipment is located above level by design.

(14) Earthquake

HPCI, ADS, CS, and LPCI:

Tolerance to conditions stated in Section 3.10.

(15) Wind and Tornado

HPCI, ADS, CS, and LPCI:

Class I structure houses all control equipment.

(16) System Response Time

HPCI, ADS, CS, and LPCI:

Response times are within the requirements of need to start ECCS (see Chapter 15).

(17) System Accuracies

HPCI; ADS; CS; and LPCI:

Accuracies are within that needed for correct timely action.

(18) Abnormal Ranges of Sensed Variables

HPCI, ADS, CS, and LPCI:

Sensors are not subject to saturation when overranged.

7.3.2a.1.2.3.1.2 Single Failure Criterion (IEEE 279-1971, Paragraph 4.2)

HPCI: The HPCI system, by itself, is not required to meet the single failure criterion. The control logic circuits for the HPCI system initiation and control are housed in a single relay cabinet and the power supply for the control logic and other HPCI system equipment is from a single DC power source.

The HPCI system initiation sensors and wiring up to the HPCI system relay logic cabinet does, however, meet the single failure criterion. In addition, two divisionally separated HPCI isolation logics are provided in compliance with IEEE-279-1971 for the leak detection system isolation function. Physical separation of instrument lines is provided so that no single instrument rack destruction or single instrument line, or pipe, failure can prevent HPCI initiation. Wiring separation between divisions also provides tolerance to single raceway destruction, including shorts, opens, and grounds, in the accident detection portion of the control logic. The single failure criterion is not applied to logic relay cabinet or to other equipment required to function for HPCI system operation.

ADS: The ADS system, comprised of two independent sets of controls for the two pilot solenoids, meets all credible aspects of the single failure criterion. At least two failures would have to occur to cause actuation. Tolerance to the following single failures or events has been incorporated into the control system design and installation:

(1) Single open circuit

(2) Single short circuit

(3) Single relay failure to pickup

(4) Single relay failure to drop out

(5) Single module failure

(6) Single control cabinet destruction

(7) Single instrument rack destruction

(8) Single raceway destruction

(9) Single control power supply failure (any mode)

(10) Single motive power supply failure (any mode)

(11) Single control circuit failure

(12) Single sensing line (pipe) failure

(13) Single electrical component failure

CS: The CS system, comprising two independent sets of controls for the two physically separated pumping systems, meets the single failure criterion. Tolerance to the following single failures or events has been incorporated into the control system design and installation:

(1) Single open circuit

(2) Single short circuit

(3) Single relay failure to pickup

(4) Single relay failure to drop out

(5) Single module failure (including multiple shorts, opens and grounds)

(6) Single control cabinet destruction (including multiple shorts, opens and grounds)

(7) Single instrument rack destruction (including multiple shorts, opens and grounds)

(8) Single raceway destruction (including multiple shorts, opens and grounds)

(9) Single control power supply failure (any mode)

(10) Single motive power supply failure (any mode)

(11) Single control circuit failure

(12) Single sensing line (pipe) failure

(13) Single electrical component failure

When considering the consequences of destruction of a single control cabinet, instrument rack or raceway, attention is focused on the wiring that must run between the two CS system control cabinets for purposes of mutual backup. Destruction of wiring in one cabinet can be assumed to short and ground the wires going between the two cabinets. It can be shown that the worst combination of shorts and grounds in a single cabinet cannot disable the automatic control for both CS system loops. False starts could be initiated and a ground may be imposed on one side of the second subsystem and redundancy may be impaired, leaving a single subsystem operating on a limiting two-out-of-two logic for the injection valve opening permissive. However, such gross destruction of an entire cabinet is extremely unlikely. Moreover, these consequences are no worse than losing a single fuse on the low pressure permissive relay circuit or failing to operate a single injection valve. Gross faulting within a single raceway can reduce redundancy but does not disable redundant systems, even though redundant DC power supplies may be involved and sensors are shared by different systems.

LPCI: Redundancy in equipment and control logic circuitry is provided so that it is highly unlikely that the complete LPCI subsystem can be rendered inoperative.

Two control logic circuits are provided. Control logic "A" initiates loop A pumps and valves. Control logic "B" initiates loop B pumps and valves.

Tolerance to the following single failures or events is provided in the control logic initiation circuitry so that these failures would disable only one LPCI loop (no more than two of four pumps available):

(1) Single open circuit

(2) Single short circuit

(3) Single relay failure to pickup

(4) Single relay failure to drop out

(5) Single module failure (including shorts, opens, and grounds)

(6) Single control cabinet destruction (including shorts, opens, and grounds)

(7) Single local instrument rack destruction (including shorts, opens, and grounds)
(8) Single raceway destruction (including shorts, opens, and grounds)

(9) Single control power supply failure

(10) Single motive power supply failure

(11) Single control circuit failure

(12) Single sensing line (pipe) failure

(13) Single electrical component failure

7.3.2a.1.2.3.1.3 Quality of Components (IEEE 279-1971, Paragraph 4.3)

HPCI: See Section 3.11

ADS: Components used in the ADS control system have been carefully selected for the specific application. Ratings have sufficient conservatism to ensure against significant deterioration over the lifetime of the plant as described below:

(1) Switch and relay contacts carry no more than 50% of their continuous current rating.

(2) Controls are energized to operate and have brief and infrequent duty cycles.

(3) Instrumentation and controls are heavy duty industrial type of standard designs well proven by service in industry or in nuclear power plants applications.

(4) These components are subjected to the manufacturers normal quality control and undergo functional testing on the panel assembly floor as part of the integrated module test prior to shipment of each panel. Only components which have demonstrated a high degree of reliability and serviceability in other functionally similar applications are selected for use in the ADS.

Furthermore, a quality control and assurance program is required, to be implemented and documented by equipment vendors, with the intent of complying with the requirements set forth in 10CFR50, Appendix B.

CS: Components used in the CS control system have been carefully selected on the basis of suitability for the specific application. All of the sensors and logic relays are of the same types used in the RPS discussed in Section 7.2. Ratings have been selected with sufficient conservatism to ensure against significant deterioration during anticipated duty over the lifetime of the plant as illustrated below:

(1) Switch and relay contacts carry no more than 50 percent of their continuous current rating.

(2) CS controls are energized to operate and have brief and infrequent duty cycles.

(3) Motor starters and breakers are effectively derated for motor starting applications since their nameplate ratings are based on short circuit interruption capabilities as well as on continuous current carrying capabilities. Short circuit current interrupting capabilities are many times the starting current for the motors being started, so that normal duty does not begin to approach maximum equipment capability.

(4) Normal motor starting equipment ratings include allowance for a much greater number of operating cycles than the emergency core cooling application will demand, even including testing.

(5) Instrumentation and controls are heavy duty industrial types of standard designs well proven by service in industry or in nuclear power plant applications.

(6) These components are subjected to the manufacturers' normal quality control and undergo functional testing on the panel assembly floor as part of the integrated module test prior to shipment of each panel. Only components that have demonstrated a high degree of reliability and serviceability in other functionally similar applications are selected for use in the CS control system.

Furthermore, a quality control and assurance program is required to be implemented and documented by equipment vendors with the intent of complying with the requirements set forth in 10CFR50, Appendix B. "Minimum" maintenance has been assumed to have been achieved if components can be reasonably expected to last 40 years or more without wearing out or failing under their maximum anticipated duty cycle, including testing.

LPCI: The discussion in this section regarding CS system equipment applies equally to the LPCI system.

7.3.2a.1.2.3.1.4 Equipment Qualification (IEEE 279-1971, Paragraph 4.4)

HPCI: The HPCI system steamline isolation valve located inside the drywell is a normally open valve and is, therefore, not required to operate except under special or test conditions. Also, this valve is considered to be part of the piping system for HPCI system operation rather than part of the control system and is outside the scope of this section. See the discussion in Section 5.5 for further information on this valve control.

Other process sensor equipment for HPCI system initiation is located in the reactor building and is capable of accurate operation in ambient temperature conditions that result from abnormal (i.e., loss-of-ventilation and LOCA) conditions. Panels and relay cabinets are located in the control structure, so environmental testing of components mounted in these enclosures is not warranted. There are no components in the HPCI control system that have not demonstrated their reliable operability in previous applications in nuclear power plant protection systems or in extensive industrial use. See Sections 3.10 and 3.11 also.

ADS: The solenoid valves, their cables, and the relief valve mechanical operators of the ADS are located inside the drywell and must remain operable in the LOCA environment. These items are selected with capabilities that permit proper operation in the most severe environment resulting from a LOCA and have been environmentally tested to verify the selection. Gamma and neutron radiation is also considered in the selection of these items and only materials which are expected to tolerate the integrated dosage superimposed on other environmental factors for at least a 40-year period of normal plant operation without excessive deterioration are used (i.e., no need for a replacement is anticipated). The SSES EQ Program manages aging of equipment in the program to ensure it continues to perform its intended function during the period of extended operation.

Other components of the ADS control system which are required to operate in the drywell environment are the condensate pots for the vessel level sensors. All other sensory equipment is located outside the drywell and is capable of accurate operation with wider swings in ambient temperature than results from normal or abnormal (i.e., loss-of-ventilation and LOCA) conditions. Reactor vessel level sensors are of the same type as for the RPS and meet the same standards. Drywell high pressure sensors are of the same type as used for the RPS and meet the same standards. Control panels and relay logic cabinets are located in the control structure which presents no new or unusual operating considerations.

All components used in the ADS control system have demonstrated reliable operation in similar nuclear power plant protection system or industrial applications. See Sections 3.10 and 3.11 also.

CS: All sensory equipment is located in the reactor building outside the drywell and is capable of accurate operation with wider swings in ambient temperature than would result from the normal or abnormal (i.e., loss-of-ventilation and LOCA) conditions. Reactor vessel water level sensors, drywell high pressure sensors, and reactor vessel low pressure permissive switches are of the same type as those discussed in Section 7.2. The testable check valves located inside the drywell are considered to be part of the piping system rather than part of the control system. Control panels and relay logic cabinets are located in the control structure which presents no new or unusual operating considerations. All components used in the CS control system have demonstrated reliable operation in similar nuclear power plant protection systems or industrial applications.

LPCI: No components of the LPCI System are required to operate in the drywell environment except for the condensate pots used with the vessel level sensors. All other sensory equipment is located outside the drywell and is capable of accurate operation with wider changes in ambient temperature than results from normal or abnormal (i.e., loss-of-ventilation and LOCA) conditions. Reactor vessel level sensors are of the same type as for the RPS and meet the same standards. Drywell high pressure sensors are of the same type as used for the RPS and meet the same standards. Reactor vessel low pressure permissive sensors are of the same type as those discussed in the RPS. The testable check valves which are located inside the drywell are considered to be part of the piping system rather than part of the control system. Control panels and relay logic cabinets are located in the control structure which present no new or unusual operating considerations.

All components used in the LPCI system have demonstrated reliable operation in similar nuclear power plant protection system or industrial applications.

7.3.2a.1.2.3.1.5 Channel Integrity (IEEE 279-1971, Paragraph 4.5)

HPCI: The HPCI system instrument initiation sensors and isolation logic meet the single failure criterion as discussed in Subsection 7.3.2a.1.2.3.1.2 and thus satisfy the channel integrity objective of this paragraph.

By definition, from IEEE 279-1971, paragraph 2, a channel loses its identity where single action signals are combined. Therefore, since instrument channels are combined into a single initiation trip system this paragraph of IEEE 279-1971 does not strictly apply for the HPCI control system.

ADS: The ADS system initiation channels (low water level or high drywell pressure) satisfy the channel integrity objective of the paragraph.

CS: The CS control system is designed to tolerate the spectrum of failures listed under the general requirements, the single failure criterion, and thus satisfies the channel integrity objective of this paragraph.

LPCI: The LPCI system initiation channels (low water level or high drywell pressure) satisfy the channel integrity objective of this paragraph.

7.3.2a.1.2.3.1.6 Channel Independence (IEEE 279-1971, Paragraph 4.6)

HPCI: Channel independence for initiation sensors monitoring each variable is provided by electrical and mechanical separation. For instance, the A and C sensors for reactor vessel water level are located on one local instrument panel identified as Division 1 equipment, and the B and D sensors are located on a second instrument rack widely separated from the first and identified as Division 2 equipment. The A and C sensors have a common pair of process taps which are widely separated from the corresponding taps for sensors B and D. Disabling of one or both sensors in one location does not disable the control for HPCI initiation. Channel independence does not strictly apply to the HPCI system since the one-out-of-two taken twice logic is combined in a single logic trip system.

ADS: Channel independence for sensors exposed to each variable is provided by electrical and mechanical separation. For instance, the A and C sensors for reactor vessel level are located on one local instrument rack identified as Division I equipment and the B and D sensors are located on a second instrument rack widely separated from the first and identified as Division 2 equipment. The A and C sensors have a common pair of process taps which are widely separated from the corresponding taps for sensors B and D. Disabling of one or both sensors in one location does not disable the control for both of the auto depressurization control channels.

Logic relays for the ADS are separated into Division 1 and Division 2 located in separate cabinets. ADS controls are separated on the control panels.

CS: Channel independence of the sensors for each variable is provided by electrical isolation and mechanical separation. For instance, the A and C sensors for reactor vessel water level are located on one local instrument panel that is identified as Division 1 equipment, and the B and D sensors are located on a second instrument panel, widely separated from the first and identified as Division 2 equipment. The A and C sensors have a common process tap, which is widely separated from the corresponding tap for sensors B and D. Disabling of one or all sensors in one location does not disable the control for either of the two core spray loops.

Relay cabinets for CS subsystem A are in a separate physical division from that for CS subsystem B, and each division is complete in itself, with its own station battery control and instrument power bus, power distribution buses, and motor control centers. The divisional split is carried all the way from the process taps to the final control element, and includes both control and motive power supplies. Although there are only two sensors for each variable in each division, the drywell pressure and reactor water level sensors backup each other so that the logic for each division is one-out-of-two taken twice, energize to operate.

LPCI: Channel independence of the sensors for each variable is provided by electrical isolation and mechanical separation. For instance, the A and C sensors for reactor vessel low water level are located on one local instrument rack that is identified as Division 1 equipment, and the B and D sensors are located on a second instrument rack, widely separated from the first and identified as Division 2 equipment. The A and C sensors have a common process tap which is widely separated from the corresponding tap for sensors B and D. Disabling of one or all sensors in one location does not disable the control for the other Division.

Relay cabinets for Division 1 are in a separate location from that of Division 2, and each division is complete in itself, with its own station battery control and instrument power bus, power distribution buses, and motor control centers. The divisional split is carried all the way from the process taps to the final control element, and includes both control and motive power supplies.

Although there are only two sensors for each variable in each division, these sensors back up each other as described in the preceding paragraph.

7.3.2a.1.2.3.1.7 Control and Protection Interaction (IEEE 279-1972, Paragraph 4.7)

The HPCI, ADS, CS and LPCI systems are designated as safety systems and are designed to be independent of plant control systems. Annunciator circuits are electrically isolated and cannot impair the operability of these systems.

7.3.2a.1.2.3.1.8 Derivation of System Inputs (IEEE 279-1971, Paragraph 4.8)

HPCI: Inputs that start the HPCI system are direct measures of the variables that indicate need for high pressure core cooling; viz., reactor vessel low water level or high drywell pressure. Reactor vessel water level and drywell pressure sensors are described in this section for the CS system and apply equally to the HPCI system.

ADS: Inputs that start the ADS are direct measures of the variables that indicate both the need and acceptable conditions for rapid depressurization of the reactor vessel; viz., reactor vessel low water verified by high drywell pressure and at least one low pressure core cooling subsystem developing adequate discharge pressure plus adequate time delay to allow HPCI to operate if available.

CS: Inputs that start the CS system are direct measures of the variables that indicate the need for low pressure core cooling; viz., reactor vessel low water level, high drywell pressure, and reactor low pressure. Reactor vessel water level is sensed by level indicating switches. Drywell high pressure is sensed by non-indicating pressure switches on two separate sensing lines connected to two separate penetrations. Each sensing line has its own root valve and each pressure switch has its own instrument valve. Four reactor vessel pressure switches for the low pressure injection valve opening permissive are on four separate instrument lines going through the drywell at two different locations. The A and C lines are in one location and the B and D lines in another location. These switches operate relays whose contacts are connected in A or B logic for the CS system valve opening permissives. The vessel water level indicator switches are operated by the differential pressure between a reference leg and a vessel static head tap.

LPCI: Inputs that start the LPCI system are direct measures of the variables that indicate the need for LPCI; viz., reactor vessel low water, high drywell pressure, and reactor low pressure. Reactor vessel level is sensed by vessel water level indicator switches. Drywell high pressure is sensed by pressure switches. Reactor low pressure is sensed by pressure switches.

7.3.2a.1.2.3.1.9 Capability of Sensor Checks (IEEE 279-1971, Paragraph 4.9)

All HPCI, ADS, CS and LPCI sensors are of the pressure sensing type, and are installed with calibration taps and instrument valves to permit testing during normal plant operation or during shutdown.

The reactor low pressure switches can be checked for operability during plant operation by closing the instrument valve and bleeding off pressure to the low pressure actuation point observing channel trip.

The reactor vessel level switches can be similarly checked for operability by closing the low side instrument valve and bleeding off a small amount of water through the low side bleed plugs (which are provided for venting the instruments), while observing the scale reading and channel trip indication in the control structure, and then reopening the instrument valve.

The drywell high pressure switches can be checked only by application of gas pressure from a low pressure source (instrument air or inert gas bottle) after closing the instrument valve and opening the calibration valve.

7.3.2a.1.2.3.1.10 Capability for Test and Calibration (IEEE 279-1971, Paragraph 4.10)

HPCI: The discussion in this section regarding CS system test and calibration applies equally to the HPCI system except that the turbine (rather than pump) is started by opening the steam inlet valve. The injection valve is kept closed during the test. The operability of the injection valve can be verified during reactor operation by opening it when the HPCI turbine is not operating.

ADS: The ADS is not tested in its entirety during actual plant operation but provisions are incorporated so that operability of all elements of the system can be verified at periodic intervals. The operability of individual valves may be verified by means of the individual control switches on the main control room panels. Testing of control circuitry is accomplished at the control relay cabinets by means of test jacks, switches, and indicator lights while exercising sensors one at a time. The test method is generally as follows:

	Action		Observation
(1)	Exercise a sensor	a.	Sensor relay pickup
		b.	Alarm is given
(2)	Start a CS or RHR	a.	Off-normal alarm
	(LPCI mode) pump	b.	Low pressure cooling
			system available relay pickup
(3)	Exercise logic channel	a.	Logic channel relay pickup
	by means of plug-in	b.	Continuity lights on each
	test switch		valve circuit are energized
(4)	Reset logic channel	a.	Annunciators clear
(5)	Repeat above steps	a.	Same as for associated
	for other sensors, other		steps above
	low pressure ECCS pumps,		
	other logic channels		

CS: The CS control system is capable of being completely tested during normal plant operation to verify that each element of the system, active or passive, is capable of performing its intended function. Sensors can be exercised by applying test pressures. Logic relays can be exercised by means of plug-in test switches used alone or in conjunction with single sensor tests. Pumps can be started by the appropriate breakers to pump water against system check valves, or return it to the suppression pool through test valves while the reactor is at pressure. Motor-operated valves can be exercised by the appropriate control relays and starters, and all indications and annunciations can be observed as the system is tested. Check valves are testable by a remotely operable pneumatic piston. Core spray water is not actually introduced into the vessel during CS system testing, unless operator action is taken to cause the injection. The only time the core spray pattern was tested was prior to initial fuel load.

LPCI: The discussion in this section regarding CS system test and calibration applies equally to the LPCI system.

7.3.2a.1.2.3.1.11 Channel Bypass or Removal from Operation (IEEE 279-1971, Paragraph 4.11)

HPCI: Calibration of a sensor that introduces a single instrument channel trip will not cause a protective function without the coincident trip of a second channel. There are no instrument channel bypasses as such in the HPCI system. Removal of a sensor from operation during calibration does not prevent the redundant instrument channel from functioning if accident conditions occur. Removal of an instrument channel from service during calibration will be brief.

ADS: Calibration of each sensor will introduce a single instrument channel trip. This does not cause a protective action without the coincident trip of three other channels. Removal of an instrument channel from service during calibration will be brief and will not significantly increase the probability of failure to operate. There are no channel bypasses in the ADS. Removal of a sensor from operation during calibration does not prevent the redundant trip circuit from functioning if accident conditions occur. The manual reset buttons can interrupt the auto depressurization for a limited time. However, releasing either one of the two reset buttons will allow automatic timing and action to resume.

CS: The discussion in this section regarding HPCI channel bypass is equally applicable to the CS system.

LPCI: The discussion in this section regarding HPCI channel bypass is equally applicable to the LPCI subsystem.

7.3.2a.1.2.3.1.12 Operating Bypasses (IEEE 279-1971, Paragraph 4.12)

There are no operating bypasses in the HPCI, CS, and LPCI system.

ADS: The manual reset of ADS timer may be considered to be an operating bypass. The bypass is automatically removed when the preset time interval expires.

7.3.2a.1.2.3.1.13 Indication of Bypasses (IEEE 279-1971, Paragraph 4.13)

Automatic indication, accompanied by an audible alarm, is provided in the main control room to inform the operator that a protection system, of which the ECCS is one, and the systems actuated or controlled by the protection system, is inoperable. Manual capability also exists in the main control room and may be used to activate each system level indicator provided for the protection system.

7.3.2a.1.2.3.1.14 Access to Means for Bypassing (IEEE 279- 1971, Paragraph 4.14)

Access to switch-gear, motor control centers and valves may be procedurally controlled by the following administrative means or other suitable alternative:

(1) Seals (or locks) on valves

(2) Lockable doors on the emergency switchgear rooms

(3) Lockable breaker control switch handles in the motor control centers

The logic test plugs are under the administrative control of the operators.

The HPCI turbine cannot be automatically bypassed but can be disabled for test purposes. Such disabling is capable only in the control room and is under the administrative control of plant supervisory personnel.

7.3.2a.1.2.3.1.15 Multiple Setpoints (IEEE 279-1971, Paragraph 4.15)

This section is not applicable to the HPCI, ADS, CS or LPCI systems because all trip setpoints are fixed.

7.3.2a.1.2.3.1.16 Completion of Protective Action Once It Is Initiated (IEEE 279-1971, Paragraph 4.16)

HPCI: The final control elements for the HPCI system are essentially bi-stable, i.e., motor operated valves stay open or closed once they have reached their desired position even though their starter may drop out (which they do when the limit switch is reached). In the case of the turbine, the auto initiation signal is electrically sealed in. Thus, protection action once initiated (i.e., flow is established) must go to completion or continue until terminated by deliberate operator action or automatically stopped on vessel high water level or system malfunction trip signals.

ADS: Each of the redundant ADS seals in electrically and remains energized until manually reset by one of the two reset pushbuttons.

CS: The final control elements for the CS system are essentially bi-stable, i.e., pump breakers stay closed without control power, and motor-operated valves stay open once they have reached their open position, even though the motor starter may drop out which will occur when the valve open limit switch is reached. In the event of an interruption in AC power, timer will recycle causing 10 second delay. Then AC motor operated valves will continue to completion of their direction of motion. Thus, protective action once initiated will go to completion or continue until terminated by deliberate operator action.

LPCI: The discussion provided in this section for the CS system is equally applicable to the LPCI system.

7.3.2a.1.2.3.1.17 Manual Initiation (IEEE 279-1971, Paragraph 4.17)

HPCI: The HPCI has a manual initiation armed pushbutton in parallel with the automatic initiation logic. Each piece of HPCI system actuation equipment required to operate the pumps and valves is capable of manual initiation electrically from the control panel in the main control room. Failure of logic circuitry to initiate the HPCI system will not affect the manual control of equipment. However, failures of active components, or control circuit failure which produce a turbine trip, may disable the manual actuation of the HPCI subsystem. Failures of this type are continuously monitored by alarms as discussed in previous sections and as such cannot realistically be expected to occur when HPCI subsystem operation is required. In no event can failure of the automatic control circuit for the HPCI subsystem disable the automatic depressurization system which provides backup to the HPCI subsystem.

ADS: The ADS has four manual initiation switches. Two switches are in each of the two ADS systems (A&B). Both switches for one system have to be closed to manually initiate ADS. To further preclude inadvertent actuation, each switch is equipped with a collar which must be turned before electrical contacts of the pushbutton are effective. Thus, to initiate ADS manually, the operator must turn two collars and depress two pushbuttons. Whenever a collar is turned, an annunciator is actuated. The two switches have, as a permissive, the RHR/core spray pump run interlocks.

The ADS automatic initiation delay timer is provided to give HPCI ample time to automatically restore vessel level so that ADS actuation will not be needed. This delay timer is not provided for manual initiation since the operator will not initiate ADS until he determines it necessary.

CS: The CS system can be manually initiated at the system level in the main control room. Each piece of CS system actuation equipment, such as a pump, valve, breaker, or starter, is capable of individual manual initiation, electrically from the control panel in the main control room and locally, if desired, by use of physical mechanisms. The valves have handwheels overriding the motor operators, and the switchgear is capable of having closing springs charged manually and the breaker closed by mechanical linkages on the switchgear.

Failures within the logic circuitry of a single CS logic may cause a single manual control failure because of commonality of circuitry at the control power fuse, the low pressure permissive relay and at the utilization point, e.g., the breaker control relay or valve motor starter coil. However, failure of any active control component exclusive of the breaker will not affect the manual control of the CS system pumps. In no event can failure of an automatic control circuit for one CS loop disable the manual electrical control circuit for the other CS loop. Single electrical failures cannot disable manual initiation of the core spray function.

LPCI: The discussion provided in this section for the CS system is equally applicable to the LPCI system.

7.3.2a.1.2.3.1.18 Access to Setpoint Adjustments (IEEE 279-1971, Paragraph 4.18)

Setpoint adjustments for the HPCI, ADS, CS, and LPCI sensors are integral with the sensors and cannot be changed without the use of tools to remove covers over these adjustments. Test points are incorporated into the control relay cabinets which are lockable to prevent unauthorized actuation.

The range or span of the drywell and reactor vessel pressure switches is not adjustable. Because of these restrictions, compliance with this paragraph of IEEE-279-1971 is considered complete.

The only adjustable setpoints in the HPCI system are those provided on the flow controller on the main control room panel and are administratively controlled.

7.3.2a.1.2.3.1.19 Identification of Protective Actions (IEEE 279-1971, Paragraph 4.19)

HPCI, ADS, CS, and LPCI:

Protective actions are directly indicated and identified by annunciator operation, sensor relay indicator lights, or action of the sensor relay, which has an identification tag and a clear glass front window permitting convenient, visible verification of the relay position. Any one of these indications should be adequate, so this combination of annunciation and visible verification relay actuation fulfills the requirements of this criterion.

In addition, the following indications are provided for the ADS:

(1) ADS-timers initiated (either one of two)

(2) ADS control power failure (any normal supply de-energized)

(3) ADS auxiliary relays energized (either one of two)

(4) High drywell pressure sealed in (any one of four)

(5) Relief valves discharge pipe high temperature (any one)

7.3.2a.1.2.3.1.20 Information Readout (IEEE 279-1971, Paragraph 4.20)

HPCI: The HPCI control system is designed to provide the operator with accurate and timely information pertinent to its status. It does not introduce signals into other systems that could cause anomalous indications confusing to the operator. Periodic testing is the means provided for verifying the operability of the components and, by proper selection of test periods to be compatible with the historically established reliability of the components tested, complete and timely indications are made available. Sufficient information is provided on a continuous basis so that the operator can have a high degree of confidence that the HPCI function is available and/or operating properly.

Annunciators are provided as shown on the functional control diagram, Dwgs. **M1-E41-65, Sh. 1**, M1-E41-65, Sh. 2, **M1-E41-65, Sh. 3**, M1-E41-65, Sh. 4, and **M1-E41-65, Sh. 5**. In addition to these annunciators, there are other indications for the HPCI system in the main control room. These indications include:

(1) Valve position lights

(2) Pump suction pressure indicator

(3) Pump discharge pressure indicator

(4) Pump flow indicator

(5) Turbine exhaust line pressure indicator

(6) Turbine steam supply pressure indicator

(7) Turbine speed indicator

(8) Shaft vibration indication

(9) Temperature recorder for:

a. Oil cooler discharge temperature

b. High pressure bearing oil temperature

c. Low pressure bearing oil temperature

d. Thrust bearing temperature

e. Pump oil temperature

(10) Control power indicator lights

ADS: The information provided to the operator pertinent to ADS status is as follows:

(1) Annunciators listed in Subsection 7.3.2a.1.2.3.1.19

(2) Valve position lights for each valve

(3) Reactor vessel level indication

a. All four channels are indicated locally.

b. Reactor vessel level is indicated in the control room.

Change of state of any active component from its normal condition is indicated in the main control room; therefore, the indication is considered to be complete and timely. The condition of the ADS pertinent to plant safety is also considered to be adequately covered by the indications and alarms delineated above.

CS: The CS control system is designed to provide the operator with accurate and timely information pertinent to its status. It does not introduce signals into other systems that could cause anomalous indications. There are many passive as well as active elements of this energize-to-operate system that are not continuously monitored for operability. Examples are circuits that are normally open and are not monitored for continuity on a continuous basis, and pressure and level sensors, that, although continuously active, are not continuously exercised and verified as operable. Verifying the operability of these components is accomplished by periodic testing and by proper selection of test period to be compatible with the historically established reliability of the components tested. Sufficient information is provided on a continuous basis so that the operator can have a high degree of confidence that the CS function is available and operating properly. Annunciation is provided for the following conditions:

(1) CS pump trip for each pump

(2) Core spray injection valve hi leakage pressure

(3) CS pump motor overload for each pump

(4) CS system out of service

(5) CS system actuated (system 1 and 2)

(6) CS system manual initiation switch armed

In addition to the annunciation listed above, other indications are included on the main control panel as follows:

(7) Valve position lights for each motor-operated valve

(8) Pump breaker position lights for each pump

(9) Position lights for the locked open valves in the drywell

(10) Position lights for the testable check valves

(11) Flow indication of loop flow in each loop

(12) CS pump discharge pressure for each pump

(13) CS pump current meter for each pump

LPCI: Sufficient information is provided on a continuous basis so that the operator can have a high degree of confidence that the LPCI function is available and/or operating properly.

7.3.2a.1.2.3.1.21 System Repair (IEEE 279-1971, Paragraph 4.21)

The HPCI, ADS, CS and LPCI control systems are designed to permit repair or replacement of components.

Recognition and location of a failed component will be accomplished during periodic testing. The logic will make the detection and location failed component relatively easy, and components are mounted in such a way that they can be conveniently replaced. For example, estimated replacement time for the type relays used is less than 30 minutes. Sensors which are connected to the instrument piping cannot be changed so readily, but they are required to be connected with separable screwed or bolted fittings and could be changed in less than 1 hour, including electrical connection replacement.

7.3.2a.1.2.3.1.22 Identification (IEEE 279-1971, Paragraph 4.22)

The ECCS panels are identified by yellow colored nameplates. Rear of panel nameplates for controls, instrumentation, and relays are distinctively colored according to their power supply color.

7.3.2a.1.2.3.2 IEEE 308-1974

Class 1E AC and DC power supply system ECCS loads are physically separated and electrically isolated into redundant load groups so that safety actions provided by redundant counterparts are not compromised.

7.3.2a.1.2.3.3 IEEE 323-1971

See Subsection 7.1.2.5.3(a).

7.3.2a.1.2.3.4 IEEE 338-1971

The only paragraphs of IEEE-338 that apply to the design of the ECCS are as follows:

(1) 2.1 - Capability of Sensor Checks

(2) 2.2 - Capability for Test and Calibration

(See Subsections 7.3.1.1a.1.3, 7.3.1.1a.1.4, 7.3.1.1a.1.5, and 7.3.1.1a.1.6.)

7.3.2a.1.2.3.5 IEEE 344-1971

See Section 3.10a.

7.3.2a.1.2.3.6 IEEE 379-1972

The Single Failure Criterion of IEEE 279-1971, Paragraph 4.2, as further defined in IEEE 379-1972, is met as described in Subsection 7.3.2a.1.2.3.1.2.

7.3.2a.2 Primary Containment and Reactor Vessel Isolation Control System for NSS Systems – Instrumentation and Controls

7.3.2a.2.1 General Functional Requirement Conformance

The PCRVICS instrumentation and control system is analyzed in this subsection. This system is described in Subsection 7.3.1.1a.2, and that description is used as the basis for this analysis. The safety design bases and specific regulatory requirements of this system are stated in Subsection 7.1.2a.1.2. This analysis shows conformance to the requirements given in that subsection.

The PCRVICS instrumentation and control system, in conjunction with other safety systems, are designed to provide timely protection against the onset and consequences of the gross release of radioactive materials from fuel and reactor coolant pressure boundaries. Chapter 15.0 identifies and evaluates postulated events that can result in gross failure of fuel and reactor coolant pressure boundaries. The consequences of such gross failures are described and evaluated. Chapter 15.0 also evaluates a gross breach in a main steamline outside the containment during operation at rated power. The evaluation shows that the main steamlines are automatically isolated in time to prevent the loss-of-coolant from being great enough to allow uncovering of the core. These results are true even if the longest closing time of the valve is assumed.

The shortest possible main steamline valve closure time is 3 seconds. The transient resulting from a simultaneous closure of all main steamline isolation valves in 3 seconds during reactor operation at rated power is discussed in Chapter 15.0.

7.3.2a.2.2 Specific Regulatory Requirements Conformance

7.3.2a.2.2.1 NRC Regulatory Guides

7.3.2a.2.2.1.1 Regulatory Guide 1.11 (1971)

Instrument lines penetrating the primary reactor containment have excess flow check valves to isolate the lines in the event of line rupture.

7.3.2a.2.2.1.2 Regulatory Guide 1.22 (1972)

MSIV:

The main steamline isolation valves, associated logic, and sensor devices may be tested from the sensor device to one of the two solenoids required for valve closure. The valve may be exercised closed with a slow acting test solenoid to verify that there are no obstructions to the valve stem at full power. A reduction in power is necessary to avoid reactor scram before performing a valve closure using two, fast acting, main solenoids.

Other Isolation Valves:

Except for the MSIV, all isolation valves may be tested from sensor to actuator during plant operation. The test may cause isolation of the process lines involved but this is tolerable.

MSL High Radiation Monitoring Subsystems:

This subsystem conforms to Regulatory Guide 1.22 in that provisions which allow periodic testing of individual channels have been built into the monitoring instruments and the trip systems.

7.3.2a.2.2.1.3 Regulatory Guide 1.29 (1972)

All electrical and mechanical devices and circuitry between process instrumentation and protective actuators and monitoring of systems important to safety are classified as Seismic Category I.

7.3.2a.2.2.1.4 Regulatory Guide 1.30 (1972)

See Section 3.13.

7.3.2a.2.2.1.5 Regulatory Guide 1.47 (1973)

MSIV and Other Isolation Valves:

Regulatory Position C.1, C.2, and C.3

Automatic indication will be provided in the main control room to inform the reactor operator that a system is inoperable. Annunciation will be provided to indicate a system or part of a system is not operable. For example, the RPS (trip) system and the PCRVICS activate annunciators whenever one or more channels of an input variable are bypassed.

Bypassing is not allowed in the trip logic or actuator logic. An example of indication of operability follows:

Instruments which form part of a one-out-of-two twice logic can be removed from service for calibration. Removal of the instrument from service will be indicated in the main control room as a single instrument channel trip.

Regulatory Position C.4

Capability for manual initiation of the ECCS system level bypass and inoperability indication is provided by activation of a control switch located in the main control room. This may be used to provide administrative control of the bypass indication for those bypasses or inoperabilities which cannot be automatically indicated. A control switch is provided for each system level bypass indicator.

The following discussion expands the explanation of conformance to Regulatory Guide 1.47 to reflect the importance of providing accurate information for the operator and reducing the possibility for the indicating equipment to adversely affect its monitored safety system.

(1) Individual indicators are arranged together on the control room panel to indicate what function of the system is out of service, bypassed or otherwise inoperable. All bypass and inoperability indicators both at a system level and component level are grouped only with items that will prevent a system from operating if needed.

(2) As a result of design, preop testing and startup testing, no erroneous bypass indication is anticipated.

(3) These indication provisions serve to supplement administrative controls and aid the operator in assessing the availability of component and system level protective actions. This indication does not perform safety functions.

(4) All circuits are electrically independent of the plant safety systems to prevent the possibility of adverse effects.

(5) Each indicator can be tested and is provided with dual lamps.

MSL High Radiation Monitoring Subsystem:

This subsystem meets the requirements of this guide as discussed in this section for MSIV.

7.3.2a.2.2.1.6 Regulatory Guide 1.53-1973

MSIV, Other Isolation Valves, and MSL High Radiation Monitoring:

Compliance with NRC Regulatory Guide 1.53 is achieved by specifying, designing, and constructing the engineered safeguard systems to meet the single failure criterion (Section 4.2 of IEEE 279-1971 and IEEE 379-1972). Redundant sensors are used and the logic is arranged to ensure that a failure in a sensing element or the decision logic of an actuator will not prevent or initiate protective action. Separated channels are employed so that a fault affecting one channel will not prevent the other channels from operating properly. Specifications are provided to define channel separation for wiring not included with NSSS supplied equipment.

Facilities for testing are provided so that the equipment can be operated in various test modes to confirm that it will operate properly when required. Testing incorporates all elements of the system under one test mode or another, including sensors, logic, actuators, and actuated equipment. The testing is planned to be performed at intervals so that there is an extremely low probability of failure in the periods between tests. During testing there are always enough channels and systems available for operation to provide proper protection.

7.3.2a.2.2.1.7 Regulatory Guide 1.62 (1973)

MSIV and Other Isolation Valves:

Means are provided for manual initiation of reactor isolation at the system level through the use of four armed pushbutton switches.

Operation of these switches accomplishes the initiation of all actions performed by the automatic initiation circuitry.

The amount of equipment common to initiation of both manual reactor isolation and automatic isolation is kept to a minimum through implementation of manual reactor isolation at the final devices (relays) of the protection system. No failure in the manual, automatic or common portions of the protection system will prevent initiation of reactor isolation by manual or automatic means.

Manual initiation of reactor isolation, once initiated, goes to completion as required by IEEE 279-1971, paragraph 4.16.

7.3.2a.2.2.1.8 Regulatory Guide 1.63 (1973)

See Subsection 7.1.2.6.13.

7.3.2a.2.2.1.9 Regulatory Guide 1.75 (1975)

Physical independence of electric systems of the PCRVICS is provided by channel independence for sensors exposed to each process variable using electrical and mechanical separation. Physical separation is maintained between redundant elements of the redundant control systems which add to reliability of operation.

7.3.2a.2.2.1.10 Regulatory Guide 1.89 (1974)

See the Susquehanna SES Environmental Qualification Program for Class 1E Equipment.

7.3.2a.2.2.2 Conformance to 10CFR50, Appendix A

(1) Criterion 13

MSIV and Other Isolation Valves:

The integrity of the reactor core and the reactor coolant pressure boundary is assured by monitoring the appropriate plant variables and closing various isolation valves.

(2) Criterion 19

MSIV and Other Isolation Valves:

Controls and instrumentation are provided in the control room.

(3) Criterion 20

MSIV and Other Isolation Valves:

The PCRVICS automatically isolates the appropriate process lines. No operator action is required to effect an isolation.

(4) Criterion 21

MSIV, Other Isolation Valves, MSL High Radiation Monitoring Subsystems:

The high reliability relay and switch devices are arranged in two redundant divisions and maintained separately. Testing is covered in the discussion on conformance to Regulatory Guide 1.22 (Subsection 7.3.2a.2.2.1.2).

(5) Criterion 22

MSIV and Other Isolation Valves:

Two redundant divisions are physically arranged so that no single failure can prevent an isolation. Functional diversity of sensed variables is utilized.

MSL High Radiation Monitoring Subsystem:

This subsystem conforms to criterion 22 in that the effects of natural phenomena and normal operation (including testing) will not result in the loss of protection.

(6) Criterion 23

MSIV and Other Isolation Valves:

The system logic and actuator signals are failsafe. The motor operated valves will fail "as-is" on loss of power, steam leak subsystem temperature switches excluded. Temperature switches fail open (non fail-safe), to negate spurious closure of isolation valves. Reliance is placed on other leak detection instruments.

MSL High Radiation Monitoring Subsystem:

This subsystem conforms to criterion 23 in that the trip circuits associated with each channel have been designed to specifically "fail-safe" in the event of loss of power.

(7) Criterion 24

MSIV, Other Isolation Valves, and MSL High Radiation Monitoring Subsystems:

The system has no control functions. The equipment is physically separated from the control system equipment to the extent that no single failure in the control system can prevent isolation.

(8) Criterion 29

MSIV, Other Isolation Valves, and MSL High Radiation Monitoring Subsystems:

No anticipated operational occurrence will prevent this equipment from performing its safety function. No anticipated operational occurrence will prevent an isolation.

(9) Criterion 34

MSIV and Other Isolation Valves:

Isolation Signals are provided for the Shutdown Cooling Subsystem of the RHR System.

7.3.2a.2.2.3 Industry Codes and Standards

7.3.2a.2.2.3.1 IEEE 279-1971

7.3.2a.2.2.3.1.1 General Functional Requirement (IEEE 279-1971, Paragraph 4.1)

PCRVICS: The PCRVICS initiates automatic closure of specific isolation valves from trip signals generated by specified process variables and maintains the valves in a closed position without further application of power until such time as a manual reset is permissible.

The control system is capable of initiating action in a time commensurate with the need for valve closure. Speed of the sensors and valve actuators are chosen to be compatible with the isolation function considered.

Accuracies of each of the sensing elements is sufficient to accomplish the isolation initiation within required limits without interfering with normal plant operation. Accuracies of each of the types of sensing instruments used for isolation are considered when establishing a trip setpoint. The safety trip setpoints are specified in the Technical Requirements Manual, and the Allowable Values of the trip setpoints are specified in the plant Technical Specifications.

The reliability of the isolation control system is compatible with the reliability of the actuated equipment (valves).

The PCRVICS equipment is designed for the full range of environmental conditions enumerated as follows:

(1) Power Supply Voltage

Tolerance exists to any degree of power supply failure in one motive power system or one control power system.

(2) Power Supply Frequency

Tolerance exists to any degree of power supply failure in one power system or one control power system.

(3) Temperature

System operates within required time limit at all temperatures that can result from an accident.

(4) Humidity

System operates within required time limit at humidities (steam) that can result from a loss-of-coolant accident.

(5) Pressure

System operates at all pressures resulting from LOCA as required.

(6) Vibration

Tolerance to conditions stated in Section 3.10.

(7) Malfunctions

System is tolerant to any single component malfunction in any mode.

(8) Accidents

Tolerance exists for any design basis accident without malfunction of either Subsystem.

(9) Fire

System is tolerant to any single raceway fire, or fire within a single enclosure.

(10) Explosion

Explosions are not defined in design bases.

(11) Missiles

System has tolerances to any single missile destroying no more than one pipe, raceway, or cabinet.

(12) Lightning

Tolerance to lightning damage is limited to one auxiliary bus system.

(13) Flood

All control equipment is located above flood level by design.

(14) Earthquake

Tolerance to conditions stated in Section 3.10.

(15) Wind and Tornado

Seismic Class I buildings house all control equipment.

(16) System Response Time

Responses are within the requirements of need to start ECCS.

(17) System Accuracies

Accuracies are within that needed for correct timely action.

(18) Abnormal Ranges of Sensed Variables

Sensors are not subject to saturation when overranged.

Valves and wiring which must function in the drywell environment in the event of a LOCA will have fulfilled their function within a short time after such an event has occurred, probably before the environment has attained the design basis values.

Main Steamline Radiation Monitoring Subsystem:

The Main Steamline Radiation Monitoring Subsystem will detect and promptly indicate a gross release of fission products from the fuel under any operation for any combination of main steamlines.

On detection of a gross release of fission products from the fuel, the subsystem will initiate appropriate alarm annunciators and provide the PCRVICS with a "trip-occurred" signal. The high-high radiation trip setting is selected so that a trip will result from the fission products released at low steam flow condition in the design basis rod drop accident. The setting is sufficiently above the background radiation level in the vicinity of the main steamlines that spurious trips are unlikely at rated power. Yet the setting is low enough to trip on the fission products calculated to be released during the design basis rod drop accident. The amount of fuel damage and fission product release involved in this accident is relatively small. Therefore, for any situation involving gross fission product release, the main steamline radiation monitoring subsystem can provide prompt safety action.

Reactor Building Radiation Monitoring Subsystem:

The subsystem will detect and promptly indicate excessive radiation in the reactor building. On detection, an isolation will be effected. For further discussion, see Section 11.5.

7.3.2a.2.2.3.1.2 Single Failure Criterion (IEEE 279-1971, Paragraph 4.2)

PCRVICS:

Tolerance to the following single failures has been incorporated into the control system design and installation:

(1) Single open circuit

(2) Single short circuit

(3) Single relay failure to pickup

(4) Single relay failure to drop out

(5) Single module failure (including multiple shorts, opens and grounds)

(6) Single control cabinet destruction (including multiple shorts, opens and grounds)

(7) Single instrument panel destruction (including multiple shorts, opens and grounds

(8) Single raceway destruction (including multiple shorts, opens and grounds)

(9) Single control power supply failure (any mode)

(10) Single motive power supply failure (any mode)

(11) Single control circuit failure

(12) Single sensing line (pipe) failure

(13) Single electrical component failure

7.3.2a.2.2.3.1.3 Quality of Components and Modules (IEEE 279-1971, Paragraph 4.3)

PCRVICS:

Components used in the isolation system have been carefully selected on the basis of suitability for the specific application. All of the sensors and logic relays are of the same types used in the RPS. Ratings have been selected with sufficient conservatism to ensure against significant deterioration during anticipated duty over the lifetime of the plant as illustrated below:

(1) Switch and relay contacts carry no more than 50% of their continuous current rating.

(2) Isolation control is deenergized to trip, instead of energized to trip, and is thus made to call attention to the failures that may occur in coil circuits, connections, or contacts.

(3) Instrumentation and controls are heavy duty industrial type of standard designs well proven by service in industry or in nuclear power plants applications.

(4) These components are subjected to the manufacturers' normal quality control and undergo functional testing on the panel assembly floor as part of the integrated module test prior to shipment of each panel. Only components which have demonstrated a high degree of reliability and serviceability in other functionally similar applications are selected for use in the isolation system.

Furthermore, a quality control and assurance program is required to be implemented and documented by equipment vendors to comply with the requirements set forth in 10CFR50, Appendix B. "Minimum" maintenance has been assumed to have been achieved if components can be reasonably expected to last 40 years or more without wearing out or failing under their maximum anticipated duty cycle (including testing).

7.3.2a.2.2.3.1.4 Equipment Qualification (IEEE 279-1971, Paragraph 4.4)

PCRVICS:

No sensory components of the isolation system are required to operate in the drywell environment with the exception of the condensing chambers. All other sensory equipment is located outside the drywell and is capable of accurate operation with wider swings in ambient temperature than results from normal or abnormal (loss-of-ventilation and LOCA) conditions. Reactor vessel level sensors are of the same type as for the RPS and meet the same standards. Drywell high pressure sensors are of the same type used for the RPS and meet the same standards. Control panels and relay logic cabinets are located in the control structure which presents no new or unusual operating considerations.

All components used in the isolation system have demonstrated reliable operation in similar nuclear power plant protection system or industrial applications.

On the component and module level, NSSS supplier conducted qualification tests to qualify the items for this application.

In situ operational testing of the detectors, monitors and channels will be performed at the site during the preoperational test phase.

7.3.2a.2.2.3.1.5 Channel Integrity (IEEE 279-1971, Paragraph 4.5)

PCRVICS:

The isolation system is designed to tolerate the spectrum of failures listed under the general requirements and the single failure criterion, and so it satisfies the channel integrity objective of this paragraph.

7.3.2a.2.2.3.1.6 Channel Independence (IEEE 279-1971, Paragraph 4.6)

The four trip channels of this protective function are electrically isolated and physically separated in order to meet this design requirement.

Channel independence for sensors exposed to each process variable is provided by electrical and mechanical separation. Physical separation is maintained between redundant elements of the redundant control systems which will add to reliability of operation.

7.3.2a.2.2.3.1.7 Control and Protection Interaction (IEEE 279-1971, Paragraph 4.7)

PCRVICS:

(1) Classifications of Equipment. There is no control function in the system. It is strictly a protection system.

(2) Isolation Devices. No isolation devices are required.

(3) Single Random Failure. No single random failure of a control system can prevent proper action of the isolation channel designed to protect against the condition.

(4) Multiple Failures Resulting from a Credible Single Event. Analysis of (3) above applies directly.

7.3.2a.2.2.3.1.8 Derivation of System Inputs (IEEE 279-1971, Paragraph 4.8)

PCRVICS:

The inputs which initiate isolation valve closure are direct measures of variables that indicate a need for isolation; viz., reactor vessel low level, drywell high pressure, and pipe break detection. Pipe break detection utilizes methods of recognition of the presence of a material that has escaped from the pipe, rather than detecting actual physical changes in the pipe itself.

7.3.2a.2.2.3.1.9 Capability for Sensor Checks (IEEE 279-1971, Paragraph 4.9)

PCRVICS:

The reactor vessel instruments can be checked one at a time by application of simulated signals. These include level, pressure, radiation and flow. Temperature sensors used for leak detection are checked periodically against a known heat source and also are calibrated, which requires removal from the circuit during calibration and replacement by calibrated units.

7.3.2a.2.2.3.1.10 Capability for Test and Calibration (IEEE 279-1971, Paragraph 4.10)

PCRVICS:

All active components of the PCRVICS can be tested and calibrated during plant operation. The radiation sensors can be cross-checked against their companions for verification of operability and since they are used with reference to background, they do not require actual sensitivity verification on a frequent basis. The contact action on an HFA type relay during a channel trip condition can be verified by observation of actual drop-out when deenergized. The auxiliary relay circuits can be tested individually by pulling the individual valve circuit fuses and observing relay drop-out. The log radiation monitor can be tested by placing the monitor switch out of the "operate" position.

Thus, complete testability of every element of the system can be demonstrated without shutting down the plant.

7.3.2a.2.2.3.1.11 Channel Bypass or Removal from Operation (IEEE 279-1971, Paragraph 4.11)

PCRVICS:

Calibration of each sensor will introduce a single instrument channel trip. This does not cause a protective function without the coincident trip of at least one other instrument channel.

7.3.2a.2.2.3.1.12 Operating Bypasses (IEEE 279-1971, Paragraph 4.12)

PCRVICS:

The isolation valve control system has two bypasses. One is the main steamline low pressure bypass which is imposed by means of the mode switch in the other-than-run mode. The mode switch cannot be left in this position with neutron flux measuring power above 10% of rated power without initiating a scram. Therefore, the bypass is removed in accordance with IEEE 279-1971, although it is a manual action that removes it rather than an automatic one.

The second, low condenser vacuum bypass is imposed by means of a manual bypass switch in conjunction with closure of the turbine stop valves. Bypass removal is accomplished automatically by the opening of the turbine stop valves and manually by placing the bypass switch in normal position. Hence, the bypass is considered to be removed in accordance with IEEE 279-1971.

In the case of the motor-operated valves, automatic or manual closure can be prevented by shutting off electric power to the motor starters. This action will be indicated by annunciator in the main control room.

As in other ESF many of the sensors for process variables operate from instrument lines hooked up with root valves and instrument valves. Shutting off these valves in certain selected combinations can disable redundant sensors and thus prevent operation of the system. Precautions are taken to preclude such a possibility by requiring that the specific manipulation of all instrument valves be either procedurally controlled, or controlled via a work authorizing document in such a manner as to assure equipment restoration is accurately performed and documented.

The low water level (Level 1) initiation of the MSIVs (Div. 1) Control Logic "A" and Control Logic "C" can be manually bypassed from the Control Room following an ATWS event, or during beyond design basis conditions (e.g., Rapid Depressurization or Primary Containment Flooding).

7.3.2a.2.2.3.1.13 Indication of Bypasses (IEEE 279-1971, Paragraph 4.13)

PCRVICS:

The bypass of the main steamline low pressure isolation signal is not indicated directly in the main control room except by the position of the mode switch handle. The bypass of the low condenser vacuum is directly indicated in the main control room by an annunciator.

As with other ESF there are means of deliberately rendering the system inoperative without giving indication of such conditions in the main control room. For instance, wires can be disconnected in an energize-to-operate system without giving indication. Nor is the de-energize-to-operate system immune from the equally disabling action of jumpering of normally closed contacts so their action will not be seen by the system. Instrument valve shutoff is another disabling mechanism which is not directly indicated in the main control room, but such action cannot be taken without defeating established administrative procedural controls.

The position of the Bypass Switches used to defeat the low water level (Level 1) initiation of the MSIVs following an ATWS event, or during beyond design conditions, is indicated in the Main Control Room by indicating lights and by an annunciator.

7.3.2a.2.2.3.1.14 Access to Means for Bypassing (IEEE 279-1971, Paragraph 4.14)

PCRVICS:

The mode switch and condenser vacuum bypass switch are the only bypass switches affecting the PCRVICS are located in the control structure and are keylocked.

As discussed in the paragraphs above, the instrument valves are under administrative control.

The Bypass Switches for the low water level (Level 1) initiation of the MSIVs following an ATWS event, or during beyond design basis conditions, are keylocked and located in the Main Control Room.

7.3.2a.2.2.3.1.15 Multiple Setpoints (IEEE 279-1971, Paragraph 4.15)

Paragraph 4.15 of IEEE 279-1971 is not applicable because all setpoints are fixed.

7.3.2a.2.2.3.1.16 Completion of Protection Action Once Initiated (IEEE 279-1971, Paragraph 4.16)

PCRVICS:

All isolation actions are sealed-in downstream of the logic, so valves go to the close position completing the protective action. Manual reset action is provided by two reset switches, so that inboard valves will be reset independent of outboard valves. This feature is incorporated only to augment the electrical separation of the inboard and outboard valves and not for any need to reset them separately.

7.3.2a.2.2.3.1.17 Manual Action (IEEE 279-1971, Paragraph 4.17)

PCRVICS:

The PCRVICS has four divisionally separated manual initiation switches which will separately activate each of the four MSIV logics and isolation system initiation at the system level.

The logic for manual initiation is one-out-of-two-twice for the main steamline isolation valves and one-out-of-two for the other isolation valves. The manual initiation switches require two distinct operator actions (armed pushbuttons) to initiate the safety action. The manual initiation circuits are at the system level, redundant, separated, testable during power operation and will meet the single failure criterion.

Manual controls are separated so that a single failure will not inhibit an isolation. The separation of devices is maintained in both the manual and automatic portion of the system so that no single failure in either the manual or automatic portions can prevent an isolation by either manual or automatic means.

7.3.2a.2.2.3.1.18 Access to Setpoint Adjustments (IEEE 279-1971, Paragraph 4.18)

PCRVICS:

Setpoint and adjustments for the isolation system sensors are integral with the sensors on the local instruments and cannot be changed without the use of tools to remove covers over these adjustments. Test points are incorporated into the control relay cabinets which are lockable to prevent unauthorized actuation. The range (or span) of the drywell and reactor vessel pressure switches is not adjustable.

7.3.2a.2.2.3.1.19 Identification of Protective Actions (IEEE 279-1971, Paragraph 4.19)

PCRVICS:

Protective actions (here, interpreted to mean pickup of a single sensor relay) are directly indicated and identified by action of the sensor relay, which has an identification tag and a clear glass front window permitting convenient, visible verification of the relay position. Any one of the sensor relays also actuates an annunciator, so that no single channel "trip" (relay pickup) will go unnoticed. Either of these indications is adequate, so this combination of annunciation and visible verification of relay actuation fulfills the requirements of this criterion. In addition, indicator lights are provided to show pickup of sensor relays.

7.3.2a.2.2.3.1.20 Information Readout (IEEE 279-1971, Paragraph 4.20)

PCRVICS:

The information presented to the reactor operator by isolation control system are as follows:

(1) Annunciation of each process variable which has reached a trip point

(2) Computer readout of trips on main steamline tunnel temperature or main steamline high flow

(3) Annunciation of steam leaks in each of the systems monitored, viz., main steam, cleanup, and RHR

(4) Open and closed position lights for each isolation valve

7.3.2a.2.2.3.1.21 System Repair (IEEE 279-1971, Paragraph 4.21)

PCRVICS:

Those components which are expected to have a moderate need for replacement are designed for convenient removal. This includes the temperature signal amplifier units and temperature sensor. The amplifier units are of the circuit card or replaceable module construction and the temperature sensor are replaceable units with disconnectable heads. Pressure sensors, vessel level sensors can be replaced in a reasonable length of time, but these devices are considered to be permanently installed although they have non-welded connections at the instrument, which will allow replacement. All devices in the system can be reasonably expected to last forty years without failure, with the duty cycle expected to be imposed, including testing. However, failures can be detected during periodic testing and replacement time will be nominal.

The main steam tunnel temperature sensors are not accessible during normal plant operation because of radiation from the main steamlines. Since there are four sensors per division, a failed sensor will be replaced during a shutdown.

Similarly, the main steamline low pressure sensors are not readily accessible during operation because of radiation from steamlines.

7.3.2a.2.2.3.1.22 Identification of Protection Systems (IEEE 279-1971, Paragraph 4.22)

PCRVICS:

Panels and racks which house isolation system equipment are identified by a distinctive color marker plate listing the system name and designation of the particular redundant portion of the system. Cables and raceways are color coded displaying the appropriate redundant portion of the system.

7.3.2a.2.2.3.2 Conformance to IEEE 308-1974

Class 1E AC power supply systems are physically separated and electrically isolated into redundant load groups so that safety actions provided by redundant counterparts are not compromised.

7.3.2a.2.2.3.3 Conformance to IEEE 323-1971

The components of the PCRVICS are covered by Subsection 7.1.2.5.3.

7.3.2a.2.2.3.4 Conformance to IEEE 338-1971

The system is testable during reactor operation. The tests will test the sensors through to the final actuators, demonstrate independence of channels, and expose failures while not negating the isolation function.

7.3.2a.2.2.3.5 Conformance to IEEE 344-1971

The seismic qualification of components of PCRVICS is covered by Section 3.10a.

7.3.2a.2.2.3.6 Conformance to IEEE 379-1972

The single failure criterion of IEEE 279, as defined by IEEE 379-1972, is fully complied with in the design of the PCRVICS.

The Main Steamline High Radiation Trip meets the single failure criterion by use of two redundant gamma sensors in each of two different locations (four sensors total). The outputs from the sensors are connected and routed separately to two independent logic trip systems. A single failure would not inhibit the required isolation function. The equipment has been seismically and environmentally qualified to ensure operation.

Power is provided from two independent sources. A failure of one source would neither cause nor inhibit the isolation function. A complete loss of power would cause an isolation to occur.

7.3.2a.3 This Subsection Is Not Used

7.3.2a.4 Containment Spray Cooling System-Instrumentation and Controls

7.3.2a.4.1 General Functional Requirement Conformance

The RHR system is in the containment spray cooling mode, when the pumps take suction from the suppression pool, pass it through the RHR heat exchangers, and inject it through spray spargers located in the upper drywell.

In the event that the hydrogen mixing system is required to limit the hydrogen concentration in the drywell, the RHR system flow will be diverted to containment spray headers (Containment Spray Mode of RHR). The flow of the RHR pump will pass through the containment spray nozzles quenching any bypassed steam resulting from operation of the hydrogen mixing system. The system is initiated as described in Subsection 7.3.1.1a.4.

7.3.2a.4.2 Specific Regulatory Requirements Conformance

The containment spray system meets the specific Regulatory Requirements as described in Subsection 7.3.2a.1.2.

7.3.2a.4.3 Conformance to Industry Codes and Standards

7.3.2a.4.3.1 IEEE 279-1971

7.3.2a.4.3.1.1 General Functional Requirement (IEEE 279-1971, Paragraph 4.1)

IEEE 279-1971 Requirement Containment Spray Design Provision

AUTO-INITIATION Containment spray is not automatically initiated; however, its safety function is adequately assured by manual initiation.

(1) Appropriate Action — Appropriate action for the containment spray control system is defined as activating equipment for introducing water into the containment spray discharge valves.

(2) Precision — Precision is a term that does not apply strictly to the containment spray system control because of the wide range of setpoint values that could give the appropriate signal to allow manual initiation. Reliability of the control system is compatible with the controlled equipment.

(3) With Reliability

(4) Over Full Range of Environmental Conditions

a. Power Supply Voltage Tolerance is provided to any degree of AC power supply voltage fluctuation within one division such that voltage regulation failures in one division cannot negate successful low pressure core cooling. DC power supply failure will likewise affect only one of the two containment spray divisions.

b. Power Supply Frequency — Same as (4)a. above. Excessive frequency reduction is indicative of an onsite power supply failure and equipment shutdown in that division is required.

c. Temperature — Operable at all temperatures that can result from LOCA.

d. Humidity — Operable at humidities (steam) that can result from LOCA.

e. Pressure — Operable at all pressures resulting from a LOCA as required.

f. Vibration — Tolerance to conditions stated in Section 3.10.

g. Malfunctions — Tolerance to any single component failure to operate on command.

h. Accidents — Tolerance to all design basis accidents without malfunction.

i. Fire — Tolerance to a single raceway or enclosure fire or mechanical damage.

j. Explosion — Explosions not defined in design basis.

k. Missiles — Tolerance to any single missile destroying no more than one pipe, raceway, or electrical enclosure.

l. Lightning — Tolerance to lightning damage limited to one auxiliary bus system. See comments under (4)a.

m. Flood — All control equipment is located above flood level by design.

n.	Earthquake	Tolerance to conditions stated in Section 3.10.
o.	Wind	Seismic Class I building houses all control equipment.
p.	System Response	Responses are within the time requirements of need to start containment spray.
q.	System Accuracies	Accuracies are within that needed for correct timely action.
r.	Abnormal Ranges	Sensors do not saturate when overranged. of Sensed Variables

7.3.2a.4.3.1.2 Single-Failure Criterion (IEEE 279-1971, Paragraph 4.2)

Redundancy in equipment and control logic circuitry is provided so that it is not possible that the complete containment spray system can be rendered inoperative using single failure criteria.

Two division logics are provided. Division 1 logic is provided to initiate loop A equipment and Division 2 logic is provided to initiate loop B equipment.

Tolerance to the following single failures or events is provided in the sensing channels, trip logic, actuator logic, and actuated equipment so that these failures will be limited to the possible disabling of the initiation of only one loop:

(1) Single open circuit

(2) Single short circuit

(3) Single component failure open

(4) Single component failure shorted or grounded

(5) Single module failure (including shorts, opens, and grounds)

(6) Single electrical enclosure involvement (including shorts, opens, and grounds)

(7) Single local instrument cabinet destruction (including shorts, opens, and grounds)

(8) Single raceway destruction (including shorts, opens, and grounds)

(9) Single control power supply failure

(10) Single motive power supply failure

(11) Single control circuit failure

(12) Single sensing line (pipe) failure

(13) Single electrical component failure

7.3.2a.4.3.1.3 Quality Components (IEEE 279-1971, Paragraph 4.3)

Components used in the containment spray control system have been carefully selected for the specific application. Ratings have sufficient conservatism to ensure against significant deterioration during anticipated duty over the lifetime of the plant as illustrated below:

(1) Switch and relay contacts carry no more than 50% of their continuous current rating.

(2) Controls are energized to operate and have brief and infrequent duty cycles.

(3) Motor starters and circuit breakers are effectively derated for motor starting applications since their nameplate ratings are based on short circuit interruption capabilities, as well as on continuous current carrying capabilities. Short-circuit current-interrupting capabilities are many times the starting current for the motors being started.

(4) Normal motor starting equipment ratings include allowance for a much greater number of operating cycles than the emergency core cooling application will demand, including testing.

(5) Instrumentation and controls are rated for application in the normal, abnormal, and accident environments in which they are located.

(6) These components are subjected to the manufacturers normal quality control and undergo functional testing on the panel assembly floor as part of the integrated module test prior to shipment of each panel. Only components which have demonstrated a high degree of reliability and serviceability in other functionally similar applications, or qualified by tests, are selected for use.

Furthermore, a quality control and assurance program is required to be implemented and documented by equipment vendors with the intent of complying with the requirements set forth in 10CFR50, Appendix B.

7.3.2a.4.3.1.4 Equipment Qualification (IEEE 279-1971, Paragraph 4.4)

No components of the containment spray system are required to operate in the drywell environment. Sensory equipment is located outside the drywell and is capable of accurate operation with wider swings in ambient temperature than results from normal or abnormal (loss-of-ventilation and LOCA) conditions. All components used in the containment spray system have demonstrated reliable operation in similar nuclear power plant protection systems or industrial operation. All of the equipment located outside the drywell are qualified to and will operate in their worst-case environments shown in the 3.11 tables.

7.3.2a.4.3.1.5 Channel Integrity (IEEE 279-1971, Paragraph 4.5)

The containment spray system instrument channels (low water level or high drywell pressure) are designed to satisfy the channel integrity objective.

7.3.2a.4.3.1.6 Channel Independence (IEEE 279-1971, Paragraph 4.6)

Channel independence of the sensors for each variable is provided by electrical isolation and mechanical separation. For instance, the A and C sensors for reactor vessel low water levels are located on one local instrument panel that is identified as Division 1 equipment; the B and D sensors are located on a second instrument panel, widely separated from the first and identified as Division 2 equipment. The A and C, sensors have a common process tap, which is widely separated from the corresponding tap for sensors B and D. Disabling of one or all sensors in one location does not disable the control for the other division.

Relay cabinets for Division 1 are in a separate physical location from that of Division 2. Each division is complete in itself with its own station battery control and instrument power bus, power distribution buses, and motor control centers. The divisional split is carried all the way from the process taps to the final activated equipment, and includes both control and motive power supplies.

Although there are only two sensors for each variable in each division, these sensors back up each other as described in the preceding paragraph.

7.3.2a.4.3.1.7 Control and Protection Interaction (IEEE 279-1971, Paragraph 4.7)

The containment spray system is a safety system designed to be independent of plant control systems.

7.3.2a.4.3.1.8 Derivation of System Inputs (IEEE 279-1971, Paragraph 4.8)

The inputs which are permissive for the containment spray system are direct measures of the variables that indicate need for containment cooling. Containment high pressure is sensed by pressure sensors. Reactor vessel water level is sensed by vessel water level sensors.

7.3.2a.4.3.1.9 Capability for Sensor Checks (IEEE 279-1971, Paragraph 4.9)

All sensors are of the pressure sensing type and are installed with calibration taps and instrument valves, to permit testing during normal plant operation or during shutdown. The drywell high pressure sensors can be checked only by application of gas pressure from a low pressure source (instrument air or inert gas bottle) after closing the instrument valve and opening the calibration valve.

The reactor water indicating switches can be calibrated during normal plant operation or during shutdown. The switches are valved out of service and a test source, using operational process fluid (demineralized water in this case), applies a differential pressure across the switches. Pressures are analogous to those corresponding to reactor water levels over the instrument's range. The same procedure is used for both setpoint and indication calibration.

7.3.2a.4.3.1.10 Capability for Test and Calibration (IEEE 279-1971, Paragraph 4.10)

The containment spray system is capable of being completely tested during normal plant operation to verify that each element of the system, active or passive, is capable of performing its intended function. Motor-operated valves can be exercised by the appropriate control logic and starters, and all indications and annunciations can be observed as the system is tested.

The pump can be started by appropriate breakers. Sensors can be exercised by applying test pressures. Logic relays can be exercised by means of plug-in test switches used alone or in conjunction with single sensor tests.

7.3.2a.4.3.1.11 Channel Bypass or Removal from Operation (IEEE 279-1971, Paragraph 4.11)

Calibration of each sensor will introduce a single instrument channel trip. This does not cause a protective function without coincident operation of a second channel.

Removal of a sensor from operation during calibration does not prevent the redundant instrument channel from functioning if accident conditions occur. Removal of an instrument channel from service during calibration will be brief.

7.3.2a.4.3.1.12 Operating Bypasses (IEEE 279-1971, Paragraph 4.12)

Containment spray has no operating bypasses.

7.3.2a.4.3.1.13 Indication of Bypasses (IEEE 279-1971, Paragraph 4.13)

There are no automatic bypasses of any part of the containment spray control system. Deliberate opening of the valve motor breaker will give annunciation in the main control room.

7.3.2a.4.3.1.14 Access to Means for Bypassing (IEEE 279-1971, Paragraph 4.14)

Access to switchgear, motor control centers, and instrument valves may be procedurally controlled by the following administrative means or other suitable alternative:

(1) Seals (or locks) on instrument valves

(2) Lockable doors on emergency switchgear rooms

(3) Lockable breaker control switch handles in the motor control centers

7.3.2a.4.3.1.15 Multiple Trip Settings (IEEE 279-1971, Paragraph 4.15)

Paragraph 4.15 of IEEE 279 is not applicable because all setpoints are fixed.

7.3.2a.4.3.1.16 Completion of Protection Action Once It Is Initiated (IEEE 279-1971, Paragraph 4.16)

The final control elements for the containment spray system are essentially bi-stable, i.e., pump breakers stay closed without control power, and motor-operated valves stay open once they have reached their open position, even though the motor starter may drop out (which will occur when the valve open limit switch is reached). In the event of an interruption in AC power the control system will reset itself and recycle on restoration of power.

Thus, protective action once initiated must go to completion or continue until terminated by deliberate operator action.

7.3.2a.4.3.1.17 Manual Actuation (IEEE 279-1971, Paragraph 4.17)

Containment spray is a manually initiated system.

7.3.2a.4.3.1.18 Access to Setpoint Adjustment (IEEE 279-1971, Paragraph 4.18)

Setpoint adjustments for the containment spray system sensors are integral with the sensors on the local instrument racks and cannot be changed without the use of tools to remove covers over these adjustments. Test points are incorporated into the control relay cabinets which are capable of being locked to prevent unauthorized actuation. The range (or span) of the drywell and reactor vessel pressure transducers is not adjustable. Because of these restrictions, compliance with this requirement of IEEE 279 is considered complete.

7.3.2a.4.3.1.19 Identification of Protective Actions (IEEE 279-1971, Paragraph 4.19)

Protective actions are directly indicated and identified by annunciator operation and sensor relay indicator lights. Either of these indications should be adequate, so this combination of annunciation and visible verification fulfills the requirements of this criterion.

7.3.2a.4.3.1.20 Information Readout (IEEE 279-1971, Paragraph 4.20)

Sufficient information is provided on a continuous basis so that the operator can have a high degree of confidence that the containment spray function is available and/or operating properly.

7.3.2a.4.3.1.21 System Repair (IEEE 279-1971, Paragraph 4.21)

The containment spray control system is designed to permit repair or replacement of components.

Recognition and location of a failed component will be accomplished during periodic testing. The simplicity of the logic will make the detection and location relatively easy, and components are mounted in such a way that they can be conveniently replaced in a short time. Sensors which are connected to the instrument piping are connected with separate screwed or bolted fittings and could be changed in approximately 1 hour, including electrical connection replacement.

7.3.2a.4.3.1.22 Identification (IEEE 279-1971, Paragraph 4.22)

A colored nameplate identifies each logic cabinet and instrument panel that are part of the containment spray system. The nameplate shows the division to which each panel or cabinet is assigned, and also identifies the function in the system of each item on the control panel.

Identification of cables and raceways is provided.

Panels in the control structure are identified by tags which indicate the system and logic contained in each panel.

7.3.2a.5 Suppression Pool Cooling Mode (RHR) - Instrumentation and Controls

7.3.2a.5.1 General Functional Requirements Conformance

The suppression pool cooling mode of the RHR is designed to limit the water temperature in the suppression pool such that the temperature immediately after a blowdown does not exceed the established limit when reactor pressure is above the limit for cold shutdown. During this mode of operation, water is pumped from the suppression pool, through the RHR system heat exchangers, and back to the suppression pool. The SPC mode thus maintains the suppression pool as a heat sink for reactor and containment.

7.3.2a.5.2 Regulatory Requirements Conformance

7.3.2a.5.2.1 Regulatory Guide 1.22 (1972)

Conformance to this guide is discussed in Section 7.3.2a.1.2.1.3

7.3.2a.5.2.2 Regulatory Guide 1.29 (1973)

Conformance to this guide is discussed in Section 7.3.2a.1.2.1.4.

7.3.2a.5.2.3 Regulatory Guide 1.30 (1972)

Conformance to this guide is discussed in Section 3.13.

7.3.2a.5.2.4 Regulatory Guide 1.32 (1972)

See Subsection 7.3.2a.1.2.3.2.

7.3.2a.5.2.5 Regulatory Guide 1.47 (1973)

Indication and annunciation is provided in the control room to inform the operator that a system or part of a system is inoperable. See Section 7.1.2.6.10 for a discussion of the bypass indication capability provided.

7.3.2a.5.2.6 Regulatory Guide 1.53 (1973)

The system is designed with two independent and redundant portions to assure that no single failure can prevent the safety function.

7.3.2a.5.2.7 Regulatory Guide 1.62 (1973)

System initiation is manual from the control room. The manual controls are easily accessible to the operator so that required actions can be performed quickly. Once initiated, system initiation goes to completion unless overridden by a higher priority function or interlock.

7.3.2a.5.2.8 Regulatory Guide 1.63 (1973)

See Subsection 7.1.2.6.13.

7.3.2a.5.2.9 Regulatory Guide 1.75 (1975)

Conformance to this guide is discussed in Section 7.1.2.6.17.

7.3.2a.5.3 Conformance to 10CFR50 Appendix A

Conformance to GDC 5, 13, 19 through 24, 29, 35, and 37 are described in Section 7.3.2a.1.2.2.

7.3.2a.5.4 Conformance to Industry Codes and Standards

7.3.2a.5.4.1 IEEE Standard 279 (1971)

7.3.2a.5.4.1.1 General Functional Requirements (Paragraph 4.1)

A. Auto Initiation - The suppression pool cooling mode has no auto-initiation feature, but is manually initiated from the control room. Proper and timely system operation is assured with manual initiation, because sufficient time and information is available to the operator. The monitored parameters which would indicate satisfactory system performance, or operator error include fluid temperature, flow, pressure, and valve positions.

B. Appropriate Protective Action - The suppression pool cooling instrumentation and controls allows manual initiation of cooling flow to control suppression pool temperature.

C. Precision - Since suppression pool cooling is manually initiated based on one or more parameters, precision does not strictly apply to this system's control circuitry.

D. Reliability - Reliability of the control system is compatible with controlled equipment.

E. Performance Under Adverse Conditions

1. Power supply voltage and frequency - An electrical fault in one division cannot impair proper suppression pool cooling mode operation due to the redundant control circuits, each being supplied by different power sources.

2. Temperature - The suppression pool cooling mode is designed to function properly in the high temperature environment expected during the design basis accidents.

3. Humidity - The system is designed to function properly in the high humidity (steam) environment expected during the design basis accidents.

4. Pressure - The system is designed to function properly in the full range of pressures expected during the design basis accidents.

5. Vibration - Tolerance to environmentally - induced vibration (earthquake, wind) is discussed in Section 3.10.

6. Accidents - The system is tolerant to any design basis accident.

7. Fire - The system is tolerant to a fire in a single division raceway or enclosure.

8. Explosions - Explosions are not defined in the design basis.

9. Missiles - The system is tolerant to any single missile destroying no more than one pipe, raceway, or electrical enclosure.

10. Lightning - The system is tolerant to lightning damage to one auxiliary AC bus.

11. Flood - All instrumentation and controls are located above flood level or are protected from flood damage.

12. Earthquake - All control equipment is housed in a seismic Class I structure. Tolerance to earthquake damage is discussed in Section 3.10.

13. Wind and Tornado - The structures containing ESF components have been designed to withstand meteorological events described in Section 3.3.2. Superficial damage may occur to miscellaneous station property during a postulated tornado, but this will not impair ESF capabilities.

14. System Response Time - Manual initiation has been shown to provide adequate response time for initiation of this RHR mode.

15. System Accuracies - Instrumentation accuracy is considered when establishing a safety trip setpoint. System accuracies are within that needed for correct timely action.

16. Ranges of Monitored Parameters - Instrument sensors and processing equipment are capable of displaying the full ranges of parameters expected during the design basis accidents.

7.3.2a.5.4.1.2 Single Failure Criterion (Paragraph 4.2)

Two independent fluid systems are provided, each with the capacity for removing the total design heat load. Two division logic networks are provided: Division 1 logic initiates loop A equipment and Division 2 logic initiates loop B equipment.

Redundancy in equipment and control logic circuitry is provided so that a single failure will not interfere with proper operation of the redundant portions of the system.

Tolerance to specific single failures or events is discussed in Section 7.3.2a.4.3.1.2.

7.3.2a.5.4.1.3 Quality of Components (Paragraph 4.3)

Components used in the suppression pool cooling mode have been carefully selected for their specific applications. Ratings have sufficient conservatism to prevent significant deterioration during expected duty over the lifetime of the plant, as illustrated below:

(1) Controls are "energized to operate" and have infrequent, brief duty cycles.

(2) Switch and relay contacts carry no more than 50% of their continuous duty rating.

(3) Normal motor starting equipment ratings include allowance for a much greater number of operating cycles than the application will demand, including testing.

(4) Instrumentation and controls are rated for application in the normal, abnormal, and accident environments in which they are located.

(5) These components are subjected to the manufacturer's normal quality control and undergo functional testing on the panel assembly floor as part of the integrated module test prior to shipment of each panel assembly. Only components which have demonstrated a high degree of reliability and serviceability in other functionally similar applications, or which have been qualified by testing, are selected for use.

Additionally, equipment vendors are required to implement and document a quality control and assurance program in accordance with the requirements of 10CFR50, Appendix B.

7.3.2a.5.4.1.4 Equipment Qualification (Paragraph 4.4)

Components of the suppression pool cooling mode instrumentation have undergone qualification testing to evaluate their suitability for reliable service in their installed locations, or have demonstrated reliable operation in similar nuclear power plant installations and industrial applications.

No component of the control system is required to operate in the drywell environment. Sensory equipment is located outside the drywell and is capable of accurate operation in wide variations of environmental conditions.

7.3.2a.5.4.1.5 Channel Integrity (Paragraph 4.5)

The suppression pool cooling mode instrumentation and controls are designed to remain operable under extreme environmental conditions as detailed in Subsection 7.3.2a.5.4.1.3 (5).

7.3.2a.5.4.1.6 Channel Independence (Paragraph 4.6)

Channel independence is maintained for all suppression pool cooling control circuitry. Channel sensor instrumentation is physically and electrically separated and identified as belonging to the respective divisions. Relay cabinets are physically and electrically separated. Each division has its own battery, control and instrumentation bus, power distribution buses, and motor control centers.

7.3.2a.5.4.1.7 Control and Protection System Interaction (Paragraph 4.7)

The suppression pool cooling mode is a safety function and is independent of plant control systems.

7.3.2a.5.4.1.8 Derivation of System Inputs (Paragraph 4.8)

The inputs to the interlock circuit for suppression pool cooling flow control are the same as those used for low pressure coolant injection. (See Section 7.3.1.1a.1.6.5.)

7.3.2a.5.4.1.9 Capability for Sensor Checks (Paragraph 4.9)

Discussion of checks on sensors used in the interlock circuit are discussed in Subsection 7.3.2a.4.3.1.9.

7.3.2a.5.4.1.10 Capability for Test and Calibration (Paragraph 4.10)

The suppression pool cooling mode can be tested completely during normal plant operation to verify that each element of the system active or passive, is capable of performing its intended function. Motor-operated valves can be exercised by the appropriate control logic and starters, and all indications and annunciations can be observed during the test.

7.3.2a.5.4.1.11 Channel Bypass or Removal from Operation (Paragraph 4.11, Operating Bypasses (Paragraph 4.12), Indication of Bypasses (Paragraph 4.13)

The suppression pool cooling controls have no operating bypasses.

7.3.2a.5.4.1.12 Access to Means for Bypassing (Paragraph 4.14)

Since there are no bypasses, this criterion is not strictly applicable. Means of disabling instrumentation and controls is administratively controlled, including control of access to instrument valves and emergency switchgear.

7.3.2a.5.4.1.13 Multiple Setpoint (Paragraph 4.15)

There are not multiple trip settings.

7.3.2a.5.4.1.14 Completion of Protective Action Once Initiated (Paragraph 4.16)

The final control elements for the suppression pool cooling mode are essentially bi-stable: for example, motor-operated valves stay open once they have reached their open position even after the motor starter drops out. Thus, once manually initiated an action will go to completion and will continue unless deliberately terminated by the operator, or overridden by a higher priority function or interlock.

7.3.2a.5.4.1.15 Manual Initiation (Paragraph 4.17)

Suppression pool cooling is manually-initiated. Each separated loop is independently controlled by the operator.

7.3.2a.5.4.1.16 Access to Setpoint Adjustments (Paragraph 4.18)

The suppression pool cooling mode does not require setpoints.

7.3.2a.5.4.1.17 Identification of Protective Actions (Paragraph 4.19)

Suppression pool cooling flow initiation is indicated by status lights on the control panel.

7.3.2a.5.4.1.18 Information Read-Out (Paragraph 4.20)

Continuous-reading indications are provided to enable the operator to verify proper system operation. The design minimizes the possibility of confusion due to inconsistent indications.

7.3.2a.5.4.1.19 System Repair (Paragraph 4.21)

The suppression pool cooling mode is designed for efficient maintainability. Easy recognition of malfunctioning equipment is provided through proper test procedures. Accessibility is provided for the sensors and controls to facilitate repair or adjustment.

Sensors connected to instrument piping have threaded fittings or bolted fasteners and can be easily replaced.

7.3.2a.5.4.1.20 Identification (Paragraph 4.22)

Nameplates identify each logic cabinet and instrument panel that is part of the RHR system. The nameplates also indicate the division to which each panel or cabinet is assigned. Identification of cables and raceways is provided.

7.3.2a.5.4.2 IEEE Standard 308 (1974)

Class 1E electrical loads in the suppression pool cooling instrumentation and control system are physically separated and electrically isolated into independent load groups. A failure in one group will not interfere with proper operation of the redundant portions of the system in Section 8.1.

7.3.2a.5.4.3 IEEE Standard 338 (1971)

The capability for testing the suppression pool cooling instrumentation and control system is discussed in Subsection 7.3.1.1a.5.10.

7.3.2a.5.4.4 IEEE Standard 379 (1972)

The single failure criterion of IEEE 279 (1971), paragraph 4.2 as further defined in IEEE 379 (1972), "Application of the Single Failure Criterion to Nuclear Power Generating Station Protection System," is met as described in Subsection 7.3.2a.5.4.1.2.

7.3.2a.5.4.5 IEEE Standard 384 (1974)

Independence of suppression pool cooling equipment is demonstrated in the Section on Conformance to IEEE 279 (1971) paragraph 4.6 and IEEE 308 (1974).
See Subsections 7.3.2a.5.4.1.6 and 7.3.2a.5.4.2.

7.3.2a.6 Additional Design Considerations Analyses

7.3.2a.6.1 General Plant Safety Analysis

The examination of the subject ESF system at the plant safety analyses level is presented in Chapter 15 and Appendix 15A.

7.3.2a.6.2 Loss of Plant Instrument Air System

Loss of plant instrument air will not negate the subject ESF system safety functions. Refer to Appendix 15A.

7.3.2a.6.3 Loss of Cooling Water to Vital Equipment

Loss of cooling water to ECCS, containment and reactor vessel isolation systems and other systems described in this section, when subject to single active component failure or single operator error, will not result in the loss of sufficient ESF system to negate their safety function. Refer to Appendix 15A.

7.3.2b ANALYSIS FOR NON-NSSS SYSTEMS

Analysis of ESF Actuation Systems (ESFAS) not supplied with the NSSS. Generally, the requirements of the General Design Criteria, Appendix A of 10CFR50, are satisfied for ESFAS as described in Section 3.1. This section describes the applicability of General Design Criteria to non-NSSS ESFAS, describes how the requirements of IEEE 279-1971 (Section 4) are applicable, and how they are met.

7.3.2b.1 General Design Criteria

Criterion 1: Quality Standards and Records

The equipment for non-NSSS ESFAS, ESF, and supporting systems is included in an established quality assurance program as described in Subsection 3.1.2 and Chapter 17.

Regulatory Guides 1.28, 1.30, and 1.38 has been satisfied with exceptions noted in Section 3.13.

Criterion 2: Design Basis for Protection Against Natural Phenomena

The design basis for protection against natural phenomena is described in Subsection 3.1.2 and is applicable to non-NSSS ESFAS.

Criterion 3: Fire Protection

The design basis for the fire protection system is described in Subsection 9.5.1 and in the Fire Protection Review Report.

Criterion 4: Environmental and Missile Design Basis

Environmental design is described in Section 3.11. Missile design basis requirements are documented in Section 3.5, and see Subsection 3.1.2 for response to these GDC.

Criterion 5: Sharing of Structures, Systems, and Components

Refer to Section 3.1.2 for general discussion.

Refer to Subsection 9.4.2 for sharing of H&V, reactor building isolation and recirculation and standby gas treatment systems.

Criterion 10: Reactor Design

The criterion is applicable to non-NSSS ESFAS insofar as containment isolation, standby gas treatment, reactor building isolation and recirculation, and control room isolation (habitability) are initiated by NSSS sensors monitoring reactor and containment conditions.

Refer to Subsection 7.2.2.1.2.2.6.

Criterion 13: Instrumentation and Controls

The instrumentation and controls for ESF systems are selected to monitor variables required for safety over the expected range of operation for normal, transient, and accident conditions. Variables affecting plant design limits are monitored to initiate protective action.

Safety related display instrumentation is documented in Table 7.5-1.

Criterion 19: Control Room

The control room layout is presented in Section 7.5.

Control room isolation and habitability is described in Sections 6.4 and Subsections 7.3.1.1b.7, and 9.4.1.

Remote shutdown design is described in Subsection 7.4.1.4.

Criterion 20: Protection System Function

The criterion is applicable to non-NSSS ESFAS insofar as containment isolation, standby gas treatment, reactor building isolation and recirculation, and control room isolation (habitability) are initiated by NSSS sensors monitoring reactor and containment conditions. Refer to Subsection 7.2.1.1.4.2 which describes variables affecting plant safety which are monitored by RPS and ESF systems, with automatic initiation through ESFAS. Refer to Tables 7.3-1 through 7.3-5 for information on the Instrument functions, Instrument/sensor type, Instrument range and Number of channels provided. Refer to Technical Requirements Manual for the trip setpoints; and the plant Technical Specifications for the Allowable Values.

Criterion 21: Protection System Reliability and Testability

Refer to Subsections 7.2.2.1.2.2.12 and 7.3.2a.2.2.3.10.

Criterion 22: Protection System Independence

Refer to Subsection 7.2.2.1.2.2.13 and 3.1.2.

Criterion 23, 24, 25, 26, 27, 28

These criteria are not directly applicable to non-NSSS ESF. Refer to Subsection 3.1.2 for general discussion.

Criterion 29: Protection Against Anticipated Operational Occurrences

Non-NSSS is affected insofar as NSSS sensors and logic are provided, selected, and installed to accomplish their function.

Criteria 30, 31, 32, 33

Not applicable to non-NSSS ESF.

Criterion 34: Residual Heat Removal

Non-NSSS RHR Service Water is an auxiliary support system to provide coolant to RHR. The system is described in Subsection 9.2.6. ESFAS is described in Subsection 7.3.1.1b.8.2.

Criterion 35: Emergency Core Cooling

Non-NSSS provides support to ECCS in that ECCS Unit Coolers (Subsection 7.3.1.1b.8.5.5) support ECCS equipment. Actuation is described in the above reference. These coolers are actuated directly by interlocks to the equipment they serve.

Criteria 36 and 37

These criteria are not applicable to non-NSSS ESF.

Criterion 38: Containment Heat Removal

Non-NSSS Drywell Unit Coolers provide the normal operating function of containment heat removal. Actuation of these coolers is described in Subsection 7.3.1.1b.8.5.6. The system is described in Subsection 9.4.5.

Criteria 39 and 40: Inspection and Testing of Containment Heat Removal

These criteria are not applicable to non-NSSS ESFAS.

Criterion 41: Containment Atmosphere Cleanup

Hydrogen Recombiner, SGTS, Recirculation and Containment Atmosphere monitoring provide functions to which these criteria apply.

These systems' ESFAS are described and analyzed in the following sections:

Hydrogen recombiner: Subsections 6.2.5 and 7.3.1.1b.2.
Standby Gas: Subsections 6.5.1.1, 9.4.2, 7.3.1.1b.4, and Table 7.3-18

Recirculation: Subsections 6.5.3, 9.4.2, 7.3.1.1b.5, and Table 3-19

Containment Atmosphere: Subsection 6.2.5, and Sections 7.5 Monitoring and 7.6.

Criteria 42 and 43

Not applicable to non-NSSS ESFAS.

Criterion 44: Cooling Water

Emergency Service Water provides support of heat transfer for standby power and reactor building and Containment Cooling under emergency conditions. RHR Service Water serves RHR. Both systems work from the ultimate heat sink. Descriptions are in Subsections 9.2.5, and 9.2.6; ESFAS are in Subsections 7.3.1.1b.8.1 and 7.3.1.1b.8.2.

Criterion 45

Not applicable to non-NSSS ESF.

Criterion 46: Testing of Cooling Water Systems

Testing of EBSW and RHRSW ESFAS are described under IEEE requirements (Paragraph 4.10) below.

Criterion 50-54: Piping Systems Penetrating Containment

These criteria are not applicable to non-NSSS ESF.

Criteria 55, 56, and 57

Primary Containment Isolation

Refer to Subsections 6.2.4, 7.3.1.1a.2, 7.3.1.1b.1, 7.3.2a and 7.3.2b and Table 6.2-12.

Criterion 60-64

Not applicable to non-NSSS ESFAS.

7.3.2b.2 Equipment Design Criteria

The requirements for safety related functional performance and reliability of ESF and auxiliary support systems are established in IEEE 279-1971, criteria for protection systems for nuclear power generating stations.

This section describes how the requirements listed in Section 4 of IEEE 279 are satisfied.

4. Requirements

4.1 General Functional Requirement

The ESFAS is designed to manually or automatically actuate non-NSSS ESF systems and auxiliary support systems whenever a plant condition is detected to exceed a preset safe value. Instrument performance and characteristics, such as response time, accuracies, and ranges are considered in the design to ensure adequate protection during anticipated normal, abnormal, or accident conditions.

Technical specifications are presented in Chapter 16.

4.2 Single Failure Criteria

In all cases for non-NSSS ESFAS described, single failure criteria are met by use of redundant protection systems. In terms of single failure analysis (IEEE 379-1972) for any required protective action, channels, system logic, and actuator circuits are redundant and independent trains. Therefore, any single failure in any subdivision of one train cannot prevent the other train from operating. Non-NSSS ESFAS and auxiliary support systems use the above design.

4.3 Quality of Components and Modules

NSSS furnished equipment serving non-NSSS ESFAS is described in Subsections 7.3.2a.2.2.3.1.3 and 7.3.2a.1. 2.3.1.3.

4.4 Equipment Qualifications

Equipment qualifications for the performance requirement of instrumentation for ESF systems, and auxiliary support systems are described in Sections 3.10 and 3.11.

4.5 Channel Integrity

Integrity within each redundant system is provided as described in above and below statements of compliance.

4.6 Channel Independence

Each redundant safety related system and its instrumentation is designed as an independent system physically separated from each other.

Physical independence of electrical systems follows the recommendations of Regulatory Guide l.75 for all non-NSSS ESF systems, and auxiliary supporting systems. Also refer to Section 3.12.

4.7 Control and Protection System Interaction

No portion of non-NSSS ESFAS is used for control functions.

4.8 Derivation of Signal Inputs

Safety related signals are measured directly from the desired process variable, if the input is provided to the ESFAS. Signals originate as described in Subsections 7.3.2a.2.2.3.1.8 and 7.3.2a.2.1.3.1.8.

4.9 Capability of Sensor Checks

Non-NSSS ESFAS use NSSS sensors. Capability for checks is covered typically in Subsection 7.3.2a.2.2.1.9. Radiation detector checks are described in Section 11.5.

4.10 Capability for Test and Calibration

Provisions have been incorporated to periodically test the non-NSSS ESFAS functions to affirm operability from the initiation signal to the final actuators. Implementation is described below for each system. Test frequency is as noted in the Technical Specification or in accordance with the preventative maintenance program as appropriate.

(1) Primary Containment Isolation Control (See Subsection 7.3.1.1b.1) is initiated by relays B21H-K84, E21A-K100A, E21A-K101A, PSHX-15120C and LISX-14221C for Division I circuits and by relays B21H-K83, E21A-K100B, E21A-K101B, PSHX-15120D and LISX-14221D for Division II circuits (Refer to E-184, sheets 1, 5 and 7). The system then isolates containment.

(2) Combustible Gas Control System - Instrumentation and Control (Subsection 7.3.1.1b.2.1), test requirements are given in 6.2.5.4.

(3) Primary Containment Vacuum Relief Instrumentation and Control is a test system (see Subsection 7.3.1.1b.3).

(4) Emergency Service Water System Instrumentation and Control (Subsection 7.3.1.1b.8.1) is initiated by the diesel start signal from diesel generators aligned to ESS Buses. All features of the system can be tested by altering the start sequence and the number of diesels being operated.

(5) RHR Service Water System Instrumentation and Control (Subsection 7.3.1.1b.8.2) is a manually initiated system and may be tested by manual initiation.

(6) Containment Instrument Gas System Instrumentation and Control (Subsection 7.3.1.1b.8.3) is initiated by the relays as described in (1) above. The system then completes its transfer function to the standby gas bottles, which is verified by indicator lights and local pressure indication.

(7) Standby Gas Treatment System (SGTS) (Subsection 7.3.1.1b.4) Sensors of the SGTS initiating circuits can be checked for the operational availability, and the initiating circuits can be actuated or calibrated by either perturbing the monitored variable or by use of substitution input to the sensors.

LOCA - signal for the SGTS is initiated by relay XY07553A for Div. I and by relays XY07553B for Div. II.

(8) Reactor Building Recirculation System (7.3.1.1b.5) Sensors of the recirculating system initiating circuits can be checked for operational availability, and the initiation of circuits can be actuated or calibrated by use of substitution input to the sensors.

LOCA-signal for the fans are directly initiated by relays XY07553A and B; Zone I recirculation dampers are initiated by relays XY07551A and B; dampers connecting SGTS to the recirculation plenum are initiated by relays XY07553A and B; Zone II dampers are initiated by relays XY07552A and B.

(9) Reactor Building Isolation and HVAC Support (Subsection 7.3.1.1b.6)

Checking of sensors and initiation circuits for the reactor building isolation is the same as for the Reactor Building Recirculation System, see Subsection 7.3.2b.2-4.10(8).

(10) Habitability, Control Room Isolation (Subsection 7.3.1.1b.7) Sensors of the control room isolation initiating circuit can be checked for the operational availability, and the initiating circuits can be initiated or calibrated by use of Substitution input to the sensors.

The LOCA signal for the control room isolation is initiated by any one of relays XY07551A, XY07552A or XY07553A for Div. I, and any one of relays XY07551B, XY07552B or XY07553B for Div. II.

(11) SGTS Equipment Room H&V System (Subsection 7.3.1.1b.8.5.1) Sensors of the SGTS equipment room H&V system initiating circuits can be checked for the availability, and the initiating circuits can be actuated or calibrated by perturbing the monitored variable at the sensors.

(12) Diesel Generator Buildings' H&V Systems (Subsection 7.3.1.1b.8.5.2) Sensors of the diesel generator buildings H&V system initiating circuits can be checked for the availability, and the initiating circuits can be actuated or calibrated by perturbing the monitored variable at the sensors.

Also the Diesel Generator A-D Building H&V system is initiated by the start of the same channel diesel generator, and by manual initiation from the main control room.

Diesel Generator 'E' Building H&V System is automatically initiated by room thermostats and manually initiated from a local control panel. If Diesel Generator 'E' is aligned to replace Diesel Generator A, B, C or D, then the Diesel Generator 'E' Building H&V System can be manually started from the main control room.

(13) Engineered Safeguard Service Water Pumphouse Ventilation System (Subsection 7.3.1.1b.8.5.3). Sensors of the system initiating circuits can be checked for the availability, and the initiating circuits can be actuated or calibrated by perturbing the monitored variable at the sensors.

Also, the ventilation system can be initiated by a start signal of associated service water pump or by manual initiation from the control room.

(14) ESF Switchgear (SWGR) Rooms Cooling Systems (Subsection 7.3.1.1b.8.5.4) The ESF SWGR rooms cooling system initiating circuits can be checked for operational availability, and the initiating circuits can be actuated or calibrated by either the use of substitution input to the sensors, or perturbing the monitored variable.

(15) Emergency Core Cooling Systems (ECCS) Unit Coolers (Subsection 7.3.1.1b.8.5.5) RHR and core spray pumps, unit coolers can be initiated by a start signal of an associated pump, or by manual initiation from the control room.

HPCI and RCIC pump room unit cooler high discharge air temperature switch initiating circuits can be checked for operational availability, and the initiating circuits can be actuated or calibrated by use of substitution input to the sensors.

Other HPCI and RCIC initiating circuits can be tested by manual tripping of steam stop valve position switches (valve open) to the respective turbines.

(16) Drywell Unit Coolers (Subsection 7.3.1.1b.8.5.6) are tripped by high drywell pressure signal relays HSX117701A through HSX517701A for Div. I, and HSX117701B through HSX517701B for Div. II, once tripped they can be manually initiated from the control room for low speed operation. CRD area ventilation fans 1V418A (Div. I) and 1V418B (Div. II) are tripped by high drywell signal relays HSX217701A and HSX217701B, respectively. Once tripped, they can be manually initiated from the control room for low speed operation.

(17) Control Structure Chilled Water System (Subsection 7.3.1.1b.8.5.7) The control structure chilled water initiating circuits can be checked for operational availability, and the initiating circuits can be actuated or calibrated by use of substitution input to the sensors, or by perturbing the monitored variable at the sensors.

(18) Primary Containment Isolation of containment purge and vent valves on high radiation signal (SGTS Exhaust Hi Hi Radiation). See Subsection 7.3.1.1b.9. The initiating circuits can be actuated or calibrated by perturbing the monitored variable at the sensor.

4.11 Channel Bypass or Removal for Operation

Non-NSSS protection systems are tested, one system at a time, which allows one of the two redundant divisions to perform full protective function. This is described typically in Subsection 7.3.2a.2.2.3.1.11.

If a division is bypassed, the single failure criteria are violated. However, the redundant division is available and is designed to fail safe, i.e., to initiate a protective action.

4.12 Operating Bypass

Non-NSSS systems are not provided with operating bypasses.

4.13 Indication of Bypasses

Bypasses of protective systems are indicated and alarmed in the control room or are covered by administrative procedure.

Refer to Bypass Indication System (BIS) description in Subsection 7.5.1b.7.

4.14 Access to Means for Bypassing

Administrative procedure is required to allow for manual system bypass. Divisionalized circuits are located in key locked panels.

4.15 Multiple Setpoints

Non-NSSS systems do not require multiple setpoints.

4.16 Completion of Protective Action Once it is Initiated
The logic circuit design ensures completion of protective action once it is initiated.

4.17 Manual Initiation

Each ESF system can be manually initiated by the operator in the main control room.

4.18 Access to Setpoint Adjustments, Calibration, and Test Points

Refer to Subsection 7.3.2a.2.2.3.1.18 and the response to requirement 4.14.

4.19 Identification of Protective Action

NSSS equipment is described in Subsection 7.3.2a.2.2.3.1.19 which applies to containment isolation, reactor building and containment atmosphere decontamination. High radiation initiated ESFAS is discussed in Section 11.5.

4.20 Information Read-Out

Each ESF system is designed with display instrumentation necessary for monitoring the protection function from the main control room. Refer to Subsections 7.3.2a.2.2.3.1.20 and 11.5.

Safety related display instrumentation is described in Section 7.5.

4.21 System Repair

Defective systems can be detected by observation of alarms, indicating lights, or during periodic testing. Replacement or repair of components is possible after the affected system has been bypassed.

4.22 Identification

All equipment, panels, modules, components, and cables of ESF and support systems are identified by tag numbers. Interconnecting cables are color coded on a division basis.

7.3.2b.3 Failure Modes and Effect Analysis (FMEA)

7.3.2b.3.1 Non-NSSS Containment Isolation Systems

FMEA's are provided in Table 7.3-20.

7.3.2b.3.2 Combustible Gas Control

This system is manually initiated. Therefore, no FMEA is provided.

Refer to the system description in Section 6.5 for details.

7.3.2b.3.3 Primary Containment Vacuum Relief

This system is a mechanically actuated system. Actuation is provided only for a test function which determines that the valves do open.

7.3.2b.3.4 Standby Gas Treatment System

FMEA is provided in Table 7.3-18.

7.3.2b.3.5 Reactor Building Recirculation

System's FMEA is provided in Table 7.3-19.

7.3.2b.3.6 Reactor Building Isolation

The discussion is provided in Subsection 9.4.2.

7.3.2b.3.7 Control Room Isolation

The system is described as Emergency Outside Air Supply. The FMEA is in Tables 7.3-21 through 7.3-26.

7.3.2b.4 Consideration of Plant Contingencies

7.3.2b.4.1 Loss of Instrument Air Systems

a) No instrument air is required to perform any protective action. Equipment using instrument air is designed to fail in a safe condition.

b) Containment Instrument Gas is provided for certain protective functions inside the containment. Refer to Subsection 7.3.1.1b.8.3 for discussion of its function.

c) Complete loss of instrument air will cause a reactor scram as described in Chapter 15.

7.3.2b.4.2 Loss of Cooling Water to Vital Equipment

Vital equipment, the emergency diesels, containment cooling, reactor building cooling, control structure coolers and ECCS unit coolers are all switched to emergency service water when the equipment is required to provide its protective function. Refer to Subsections 9.2.5 and 7.3.1.1b.8.1.

7.3.2b.5 Testing Methods and Effects on System Integrity During Testing

Chapter 14 discusses preoperational and startup test programs. See the Technical Specifications for surveillance during normal operation.

Table Rev. 55

TABLE 7.3-1

HIGH PRESSURE COOLANT INJECTION SYSTEM-INSTRUMENT SPECIFICATIONS AND CHANNELS

HPCI Function	Instrument	Instrument Range[1]	Number of Channels Provided[2]
Reactor vessel high water level turbine trip	Level switch	0 – 60"	2 per trip system
Turbine exhaust high pressure	Pressure switch	10 – 240 psig	2
HPCI system pump high/low suction pressure	Pressure switch	High[5] Low 30" Hg/10 psig	1 1
Reactor vessel low water level	Level switch	-150/0/+60"	2 per trip system
Primary containment (drywell)high pressure	Pressure switch	0.2 – 6 psig	2 per trip system
HPCI pump minimum flow	Flow switch	0 – 1370gpm [4]	1
HPCI system steam supply low pressure	Pressure switch	6 – 340 psig	2 per trip system
HPCI pump discharge flow	Flow indicator controller	0 – 6000 gpm	1
Condensate storage tank low level	Level switch	± 1"	2 per trip system
Suppression pool high water level	Level switch	± 1"	2[6]
Turbine overspeed	Centrifugal device[3]	0 – 6000 rpm	1
HPCI system pump high discharge pressure	Pressure switch	6-340 psig	1

(1) See the Technical Requirements Manual for the trip setpoints; and the plant Technical Specifications for the Allowable Values, where applicable.

(2) See the Technical Specifications for the minimum number of channels required.

(3) See Section 6.3, ECCS, for description of the turbine; this purely mechanical device forms an integral part of the turbine.

(4) Equivalent dp range 0-20" H_2O.

(5) Unit 1: 3-85 psig
Unit 2: 10-275 psig

(6) Control Room Alarm Only

TABLE 7.3-2

AUTOMATIC DEPRESSURIZATION SYSTEM – INSTRUMENT SPECIFICATIONS AND CHANNELS

ADS Function	Instrument	Instrument Range [1]	Number Of Channels Provided[2]
Reactor Vessel Low Level (ADS Initiation)	Level Switch	0-60"	1 per Trip System
Reactor Vessel Low Water Level (ADS Initiation)	Level Switch	-150/0/+60"	2 per Trip System
Primary Containment (Drywell) High Pressure	Pressure Switch	0.2-6 psig	2 per Trip System
Automatic Depressurization Time Delay	Timer	0-150 sec	1 per Trip System
LPCI Pump Discharge Pressure	Pressure Switch	10-240 psig	4 per Trip System
Core Spray Pump Discharge Pressure	Pressure Switch	6-330 psig	2 per Trip System
High Drywell Pressure Bypass Time Delay	Timer	1-30 min.	2 per Trip System

(1) See the Technical Requirements Manual for the trip setpoints, and the plant Technical Specifications for the Allowable Values, where applicable.

(2) See the Technical Specifications, for minimum number of channels required.

TABLE 7.3-3

CORE SPRAY SYSTEM – INSTRUMENT SPECIFICATIONS AND CHANNELS

CS Function	Instrument	Instrument Range [1]	Number Of Channels Provided [2]
Reactor Vessel Low Water	Level Switch	-150/0/+60"	2 per Trip System
Reactor Containment High Pressure	Pressure Switch	0.2-6 psig	2 per Trip System
Reactor Vessel Low Pressure	Pressure Switch	0-500 psig	2 per Trip System
Core Spray High Differential Pressure	Differential Pressure Switch	-10/0/+15 psid	1 per Sparger (alarm only)
Pump Discharge Minimum Flow	Flow Switch	0-1782 gpm[3]	4 per Loop
Pump Suction Pressure	Pressure Indicator	-30" Hg/0/60 psig	2 per Pump (indicator only)
Pump Discharge Pressure (ADS Permissive)	Pressure Indicator	6-330 psig	2 per Trip System

(1) See the Technical Requirements Manual for the trip setpoints, and the plant Technical Specifications for the Allowable Values, where applicable.

(2) See the Technical Specifications, for minimum number of channels required.

(3) Equivalent dp range 0-30" H_2O.

TABLE 7.3-4

LOW PRESSURE COOLANT INJECTION - INSTRUMENT SPECIFICATION AND CHANNELS

LPCI Function	Instrument	Range [1]	Channels Provided [2]
Reactor vessel low water level (LPCI initiation)	Level switch	-150"/0/+60"	2 per trip System
Drywell high pressure (LPCI initiation)	Pressure switch	0.2-6 psig	2 per trip System
Drywell high pressure (ADS initiation)	Pressure switch	0.2-6 psig	2 per trip System
Reactor low pressure (LPCI valves)	Pressure switch	0-500 psig	2 per trip System
Pump minimum flow bypass	Flow switch	0-4270 gpm (3)	1 per trip System
Pump discharge pressure (signal to auto. depressurization system)	Pressure switch	10-240 psig	4 per trip System
Reactor low pressure (recirc. valves)	Pressure switch	100-1200 psig 0-500 psig	2 per trip System

---

(1) See the Technical Requirements Manual for the trip setpoints, and the plant Technical Specifications for the Allowable Values, where applicable.

(2) See the Technical Specifications for minimum number of channels required.

(3) Equivalent dp range 0-20" H_2O.

TABLE 7.3-5

PRIMARY CONTAINMENT AND REACTOR VESSEL ISOLATION CONTROL SYSTEM INSTRUMENTATION SPECIFICATIONS

Isolation Function	Instrument / Or Sensor	Range (1)	Number Of Channels Provided (1) (2)
Reactor Vessel Low Water Level (Isolation of Primary System Valves Except MSI Valves) Signal A	Differential Level Switch	0-60”	--
Reactor Vessel Low Water Level (Isolation MSI Valves) Signal G	Differential Level Switch	-150 / 0 / +60”	--
Main Steamline High Radiation	Radiation Monitor	$1\text{-}10^6$ MR/HR	4
Main Steamline High Flow	Differential Pressure Switch	0-200 psid	--
Main Steamline Low Pressure	Pressure Switch	100 – 1200	--
Primary Containment High Pressure	Pressure Switch	0.2-6 psig	--
Condenser Vacuum	Vacuum Switch	.8” Hg VAC-29.2” Hg VAC 30” HgV to 0.5 psi	4
Reactor Building Ventilation Exhaust High Radiation	Radiation Monitor	0.01 = 100 MR/HR	2
Isolation Function	**Instrument / Or Sensor**	**Range (1)**	**Number Of Channels Provided (2) (3)**
Reactor Vessel High Pressure	Pressure Switch	0-225 psig	2
Reactor Water Cleanup System Space High Temperature (System Isolation)	Temperature Switch	50 - 350°F	6
Main Steamline Space High Temperature	Temperature Switch	50 - 350°F	--
RWCU High Flow	Flow Switch	0 – 24” H_20	2
Reactor Water Cleanup High Differential Flow	Differential Flow Switch	0 - 100%	--
RHR Water Line High Flow	Differential Pressure Indicating Switch	-300-+300”H_20	2

(1) See the Technical Requirements Manual for the trip setpoints, and the plant Technical Specifications for the Allowable Values, where applicable..

(2) See the Technical Specifications for minimum number of channels required.

(3) Normal number of trip channels per trip system.

TABLE 7.3-13

ESFAS ACTUATED EQUIPMENT
STANDBY GAS TREATMENT SYSTEM

Equipment No.	Figure No.	Description	ESF Train	Control Signal Function (See Table 7.3-17)						Remarks
				A	B	C	D	E	F	
OV-109A	VC-175 Sh. 3	SGTS 'A' fan	A	Start	Start		Start	Start	Trip	
OV-109B	VC-175 Sh. 3	SGTS 'B' fan	B	Start	Start		Start	Start	Trip	
TV-07550A	VC-175 Sh. 3	SGTS backup deluge valve 'A'	A	--	--	--	--	--	Open	
TV-07550B	VC-175 Sh. 3	SGTS backup deluge valve 'B'	B	--	--	--	--	--	Open	
HV-07551A1 through A4	VC-175 Sh. 3	SGTS drain valves 'A1' through 'A4'	A	--	--	--	--	--	Open	
HV-07551B1 through B4	VC-175 Sh. 3	SGTS drain valves 'B1' through 'B4'	B	--	--	--	--	--	Open	
TD-07560A	VC-175 Sh. 3	SGTS crossover duct 'A' dmpr	A	--	--	--	--	Open	--	Control signal 'E' will open valve 'A' only when SGTS train 'B' is in operation and vice versa; otherwise, they will stay closed.
TD-07560B	VC-175 Sh. 3	SGTS crossover duct 'B' dmpr	B	--	--	--	--	Open	--	

TABLE 7.3-14

ESFAS ACTUATED EQUIPMENT
RECIRCULATION SYSTEM, REACTOR BUILDING ISOLATION DAMPERS, AND REACTOR BUILDING NONSAFETY RELATED EQUIPMENT

Table Rev. 55

EQUIPMENT NO.	FIGURE NO.	DESCRIPTION	ESP TRAIN	Control Signal Function (See Table 7.3-17)		REMARKS
				A	B	
0V201A	VC-175 Sh. 1	Recirculation 'A' fan	A	Start	Start	
0V201B	VC-175 Sh. 1	Recirculation 'B' fan	B	Start	Start	
HD07543A	VC-175 Sh. 1	Recirculation 'A' dmpr	A	Open	Open	
HD07543B	VC-175	Recirculation 'B' dmpr	B	Open	Open	
HD17601A	VC-176	Recirculation 'A' dmpr	A	Open	-	
HD17601B	VC-176	Recirculation 'B' dmpr	B	Open	-	
HD17602A	VC-176	Recirculation 'A' dmpr	A	Open	-	
HD17602B	VC-176	Recirculation 'B' dmpr	B	Open	-	
HD17657A	VC-176	Recirculation 'A' dmpr	A	Open	-	
HD17657B	VC-176	Recirculation 'B' dmpr	B	Open	-	
		Reactor Building Isolation Dmprs				
HD17524A	VC-175 Sh. 2	Zone I eq comp exh sys	A	Close	-	
HD17524B	VC-175 Sh. 2	Zone I eq comp exh sys	B	Close	-	
HD17576A	VC-175 Sh. 1	Zone I exhaust sys	A	Close	-	
HD17576B	VC-175 Sh. 1	Zone I exhaust sys	B	Close	-	
HD17586A	VC-175 Sh. 1	Zone I supply sys	A	Close	-	
HD17586B	VC-175 Sh. 1	Zone I supply sys	B	Close	-	
HD17514A	VC-175 Sh. 2	Zone III filt'd exh sys	A	Close	Close	
HD17514B	VC-175	Zone III filt'd exh sys	B	Close	Close	

TABLE 7.3-14

ESFAS ACTUATED EQUIPMENT
RECIRCULATION SYSTEM, REACTOR BUILDING ISOLATION DAMPERS, AND REACTOR BUILDING NONSAFETY RELATED EQUIPMENT

Table Rev. 55

EQUIPMENT NO.	FIGURE NO.	DESCRIPTION	ESP TRAIN	Control Signal Function (See Table 7.3-17)		REMARKS
				A	B	
HD17502A	VC-175 Sh. 2	Zone III exhaust sys	A	Close	Close	
HD17502B	VC-175 Sh. 2	Zone III exhaust sys	B	Close	Close	
HD17564A	VC-175 Sh. 1	Zone III supply sys	A	Close	Close	
HD17564B	VC-175 Sh. 1	Zone III supply sys	B	Close	Close	
HD17534A	VC-175 Sh. 1	Zone air lock I-606	A	Close	Close	
HD17534B	VC-175 Sh. 1	Zone air lock I-611	A	Close	Close	
HD17534D	VC-175 Sh. 1	Zone air lock I-803	A	Close	Close	
HD17534E	VC-175 Sh. 1	Zone air lock I-805	A	Close	Close	
HD17534F	VC-175 Sh. 1	Zone air lock I-617	A	Close	Close	
HD17534H	VC-175 Sh. 1	Zone air lock I-618	A	Close	Close	
HD17508A	VC-175 Sh. 3	Unit 1 drywell & wetwell purge & burp	A	Close	Close	
HD17508B	VC-175 Sh. 3	Unit 1 drywell & wetwell purge & burp	B	Close	Close	
		Reactor Building Non-Safety-Related Equipment				
1V217A	VC-175 Sh. 2	Zone III filt'd exh sys	-	Trip	Trip	

TABLE 7.3-14

ESFAS ACTUATED EQUIPMENT
RECIRCULATION SYSTEM, REACTOR BUILDING ISOLATION DAMPERS, AND REACTOR BUILDING NONSAFETY RELATED EQUIPMENT

Table Rev. 55

EQUIPMENT NO.	FIGURE NO.	DESCRIPTION	ESP TRAIN	Control Signal Function (See Table 7.3-17)		REMARKS
				A	B	
1V217B	VC-175 Sh. 2	Zone III filt'd exh sys	-	Trip	Trip	
1V206A	VC-175 Sh. 2	Zone I eq comp exh sys	-	Trip	-	
1V206B	VC-175 Sh. 2	Zone I eq comp exh sys	-	Trip	-	

TABLE 7.3-15

ESFAS ACTUATED EQUIPMENT
CONTROL STRUCTURE EMERGENCY OUTSIDE AIR SUPPLY SYSTEM

EQUIPMENT NO	FIGURE NO.	DESCRIPTION	ESF TRAIN	Control Signal Function (See Table 7.3-17)						REMARKS
				A	B	F	I	J	G	
OV101A	VC-178 Sh. 1	Emerg O/A supp A fan	A	Start	Start	Trip	-	Start	Trip	
OV101B	VC-178 Sh. 1	Emerg O/A supp B fan	B	Start	Start	Start	-	Start	Start	
HD07812A	VC-178 Sh. 1	Emerg O/A supp cont A dmpr	A	Open	Open	Close	Close	Open	Close	
HD07812B	VC-178 Sh. 1	Emerg O/A supp cont B dmpr	B	Open	Open	Open	Close	Open	Open	
HD07802A	VC-178 Sh. 1	Normal O/A supp isol A dmpr	A	Close	Close	-	Close	Close	-	
HD07802B	VC-178 Sh. 1	Normal O/A supp isol B dmpr	B	Close	Close	-	Close	Close	-	
HD07814A	VC-178 Sh. 1	Emerg O/A supp isol A dmpr	A	Open	Open	Close	Close	Open	Close	
HD07814B	VC-178 Sh. 1	Emerg O/A supp isol B dmpr	B	Open	Open	Open	Close	Open	Open	
HD07813A	VC-178 Sh. 1	Emerg O/A recirc isol A dmpr	A	-	-	-	Open	-	-	
HD07813B	VC-178 Sh. 1	Emerg O/A recirc isol B dmpr	B	-	-	-	Open	-	-	
HD07833A	VC-178 Sh. 1	Cont rm relief air A dmpr	A	-	-	-	Close	-	-	
HD07833B	VC-178 Sh. 1	Cont rm relief air B dmpr	B	-	-	-	Close	-	-	
HD07824A1	VC-178 Sh. 3	Cont struct exh isol A1 dmpr	A	Close	Close	-	Close	Close	-	
HD07824B1	VC-178 Sh. 3	Cont struct exh isol A2 Dmpr	B	Close	Close	-	Close	Close	-	

TABLE 7.3-15

ESFAS ACTUATED EQUIPMENT
CONTROL STRUCTURE EMERGENCY OUTSIDE AIR SUPPLY SYSTEM

EQUIPMENT NO	FIGURE NO.	DESCRIPTION	ESF TRAIN	Control Signal Function (See Table 7.3-17)						REMARKS
				A	B	F	I	J	G	
HD07873A	VC-178 Sh. 2	Cont rm kitchen A dmpr	A	Close	Close	-	Close	Close	-	
HD07873B	VC-178 Sh. 3	Cont rm kitchen B dmpr	B	Close	Close	-	Close	Close	-	
OV105	VC-178 Sh. 4	Access cont & lab area supp fan	A/B	Trip	Trip	-	-	Trip	-	

TABLE 7.3-16

ESFAS ACTUATED EQUIPMENT
BATTERY ROOMS EXHAUST SYSTEM

THIS TABLE HAS BEEN DELETED

TABLE 7.3-17

GENERAL NOTES FOR TABLES 7.3-13 THROUGH 7.3-16

1.	The Engineered Safety Feature actuation Systems (ESFAS) control signals are as follows:
A	Loss of coolant accident (LOCA)
B	High radiation in reactor building zone III nonfiltered exhaust system
C	High radiation in SGTS exhaust vent
D	High pressure in SGTS inlet header
E	Charcoal filter high temperature (pre-ignition temperature)
F	Charcoal filter high-high temperature (ignition temperature)
G	High radiation in emergency outside air intake for the control structure
H	High temperature differential across the emergency outside air supply charcoal unit.
I	High drywell pressure

TABLE 7.3-18

STANDBY GAS TREATMENT SYSTEM (SGTS)
FAILURE MODE AND EFFECTS ANALYSIS

Failure Mode	Effect On System	Detection	Remarks
Loss of offsite power	Momentary loss of the system. The system will automatically start as required when emergency power to on line.	Alarm in the control room	Instrumentation and controls are powered from separate Class IE diesel generators.
Failure of LOCA signal:	No lose of safety function		
a) Contact open or open wiring	If the system is operated in the lead-lead mode, the train affected by the failure will not start but the other train will.		
b) Contact closed or shorted	If the system is operated in the lead-lead mode the train is in the same division as the failed contact will start.		
Failure of any high-high radiation signal from the refueling pool, refueling floor, and railroad access shaft radiation monitors:	No loss of safety function		
a) Contact open or open wiring	Effect on system is the same as failure of LOCA signal.	Radiation monitor inoperative is alarmed in the control room.	Any other failures such as open circuit, which may not be alarmed, can be detected by periodic testing.
b) Contact closed or shorted	Effect on system is the same as failure of LOCA signal.	High-high radiation contact closure is alarmed in the control room.	

TABLE 7.3-18

STANDBY GAS TREATMENT SYSTEM (SGTS)
FAILURE MODE AND EFFECTS ANALYSIS

Failure Mode	Effect On System	Detection	Remarks
Failure of the common exhaust duct airflow signal:	No loss of safety function		
a) Contact open or open wiring	The system is operated in the lead-lead mode both trains will continue to operate.		
b) Contact closed or shorted	The system is operated in the lead-lead node both trains will continue to operate.		
Failure of high-high charcoal adsorber temperature (ignition temperature) trip signal:	No loss of safety function		
a) Contact closed or shorted	The system Is operated In the lead-lead mode both trains will continue to operate.	High and high-high temperature alarm. High- high radiation alarm. All alarms are in the control room.	The charcoal pre-ignition temperature is alarmed in the control room to forewarn the operator.
b) Contact open or open wiring	The system Is operated In the lead-lead mode and the affected train will be tripped and the other train will continue to operate.	Periodic testing. Emergency operating procedure.	
Failure of high inlet header static pressure Initiating signal:			
a) Contact closed or shorted	The affected train will automatically start.	Status indicating lights In the control room.	

TABLE 7.3-18

STANDBY GAS TREATMENT SYSTEM (SGTS)
FAILURE MODE AND EFFECTS ANALYSIS

Failure Mode	Effect On System	Detection	Remarks
b) Contact open or open wiring	One train will start if required.	Periodic testing. Alarm In the control room if high pressure exists.	
Failure of the charcoal adsorber high temperature(pre-ignition) Initiating signal:	No loss of the safety function		
a) Contact closed or shorted	The affected train will automatically start in its cooling mode (non-safety-related function).	Status Indicating lights In the control room. Alarm in the control room if high temperature exists.	
b) Contact open or open wiring	No effect if the affected train is operating.	Periodic testing	
	If the affected train is not operating, the heat could eventually reach ignition. At Ignition temperature, the train will not be able to start and the deluge water valve is opened.	Periodic testing. Pre-ignition and ignition temperature alarms in the control room.	

TABLE 7.3-19

REACTOR BUILDING RECIRCULATION SYSTEM
FAILURE MODE AND EFFECTS ANALYSIS

Failure Mode	Effect on System	Detection	Remarks
Loss of offsite power	No loss of the safety function by the system. Momentary loss of the system. The system will automatically restart when emergency power supply is established.	alarm in the control room	Instrumentation and controls are powered from separate Class IE diesel generators.
Failure of initiating signal from any of reactor building radiation monitors:	No loss of safety function of the system.		
a) Contact closed or shorted	This is equivalent to existence of any of the reactor building high radiation initiating signals. See Table 7.3-14 for the list of the actuated equipment.	Various alarms in the control room associated with the reactor building isolation.	
b) Contact open or open wiring	Failure to initiate operation of the lead recirculation fan. Also failure to open or close associated isolation dampers. However, the redundant high radiation signal will initiate the standby recirculation fan and actuate the redundant isolation dampers.	Periodic testing	
Failure of one LOCA signal	No loss of safety function of the system. The effect on system is identical to the effect of loss of one of the reactor building high radiation signals. See description above.		

TABLE 7.3-19 (Continued)

Failure Mode	Effect on System	Detection	Remarks
Failure of system air flow switch:	No loss of safety function of the system		
a) Contact closed or shorted	If the signal is for the operating fan, the fan will trip and the standby fan will automatically start.	Fan failure alarm in the control room, or periodic testing if the fan is not in operation when the flow switch fails.	
	If failed signal is for the standby fan, the fan will not start when required.	Periodic testing	
b) Contact open or open wiring	If failed signal is for the operating fan, the fan will continue to run. When failed signal is for the standby fan, the fan can start and run when required, and once the standby fan, when used, loses its flow the lead fan flow switch will detect it and will start the lead fan.	Periodic testing	

TABLE 7.3-20

FAILURE MODE AND EFFECTS ANALYSIS
PRIMARY CONTAINMENT ISOLATION CONTROL SYSTEM FAN NON-NSS SYSTEMS

FAILURE MODE	EFFECT ON SYSTEM	DETECTION	REMARKS
Nuclear Steam Supply Shutoff System interface/actuation relays:			
Open	Components in one division isolate	Immediate annunciator	Spurious trip and isolation of part of one division
Close	Loss of actuation system for components in one division	Periodic testing	Redundant division available for isolation control
Loss of one division AC power (control circuit)	Automatic isolation of portions of one division	Immediate annunciator	Spurious trip and isolation of part of one division
Output wiring fails (equipment level):			
Short	Loss of isolation function for this device	Periodic testing	Redundant division available for isolation
Open	Spurious isolation of the process line	Periodic testing/indicating lights	
Core Spray System Interface/actuation relays			
Open	1 channel of 2 in division trips, no components re-position	Indicating lamps in control room.	Isolation logic for division is placed to 1 of 1 once logic. Redundant division available for isolation.
Close	1 channel of 2 in division will not trip, therefore isolation on that function inhibited in that division	Periodic testing	Redundant division available for isolation.
Loss of one division DC power (control circuit)	1 channel of 2 in division trips, no components re-position	Indicating lamps in control room.	Isolation logic for division is placed to 1 of 1 once logic. Redundant division available for isolation.

TABLE 7.3-20

FAILURE MODE AND EFFECTS ANALYSIS
PRIMARY CONTAINMENT ISOLATION CONTROL SYSTEM FAN NON-NSS SYSTEMS

FAILURE MODE	EFFECT ON SYSTEM	DETECTION	REMARKS
Output wiring fails (equipment level):			
Open	The fault will not cause the isolation nor inhibit the proper operation of the other division	Periodic testing	Redundant division available for isolation
Short	The fault will not cause the isolation nor inhibit the proper operation of the other division	Periodic testing	Redundant division available for isolation.

TABLE 7.3-21

EMERGENCY OUTSIDE AIR SUPPLY SYSTEM (EOASS)
FAILURE MODE AND EFFECTS ANALYSIS

FAILURE MODE	EFFECT ON SYSTEM	DETECTION	REMARKS
Loss of offsite power	Momentary loss of the system. The system will automatically start as required when emergency power is on line.	Alarm in the control room	Instrumentation and controls are powered from separate Class IE diesel generators.
Failure of the control structure radiation isolation signal.	No loss of safety function		
a) Contact closed or shorted	The affected train will start automatically.	Status indicating lights in the control room.	All isolation dampers except those required by the EOASS are tripped (closed) on control structure radiation isolation.
b) Contract open or open wiring	The affected train will not be able to start automatically when required.	Periodic testing	
Failure of the common exhaust duct air flow signal:			
a) Contact open or open wiring	If failed signal is for the lead operating train, it has no effect.	Periodic testing	
	If failed signal is for the standby train, the standby train will not start on failure of the lead train.	Periodic testing	
b) Contact closed or shorted	If failed signal is for the lead operating train, the lead train will trip itself out and the standby will start automatically.	Fan failure alarm in the control room.	

TABLE 7.3-21

EMERGENCY OUTSIDE AIR SUPPLY SYSTEM (EOASS)
FAILURE MODE AND EFFECTS ANALYSIS

FAILURE MODE	EFFECT ON SYSTEM	DETECTION	REMARKS
	If failed signal is for the standby train, the standby train is disabled.	Periodic testing.	
Failure of high-high charcoal adsorber temperature (ignition temperature) trip signal:	No loss of safety function		
a) Contact closed or shorted	If failed signal is for the operating filter train, the operating train will not trip and air supply to the control room may be contaminated. The area radiation monitors in the control room will detect contamination and will alarm. The operating train of the EOASS could then be manually stopped and the standby manually started.	High area radiation alarm, high and high-high charcoal temperature alarms	All alarms are in the control room.
	If failed signal is for the standby filter train, the standby train will no longer be effective to perform its function. The standby train can be put in OFF position.	High and high-high charcoal temperature alarms in the control room. Periodic testing.	
b) Contact open or open wiring	Affected train will not be able to start or operate.	Periodic testing Status indicating lights, high and/or high-high charcoal temperature alarms in the control room	

TABLE 7.3-21

EMERGENCY OUTSIDE AIR SUPPLY SYSTEM (EOASS)
FAILURE MODE AND EFFECTS ANALYSIS

FAILURE MODE	EFFECT ON SYSTEM	DETECTION	REMARKS
Failure of the low temperature differential across the electric heater (heater failure) trip signal	No loss to the safety function. Effect on the system is the same as failure of the high-high charcoal adsorber temperature.	High area radiation alarm Heater failure alarm Periodic testing	Alarms are in the control room.

TABLE 7.3-22

COMPUTER ROOM COOLING SYSTEM (CRCS)
FAILURE MODE AND EFFECTS ANALYSIS

Failure Mode	Effect on System	Detection	Remarks
Loss of offsite power	Momentary loss of the system. System will automatically restart when emergency power is ON and the chilled water system starts.	Alarm in the control room	Instrumentation and controls are powered from separate Class IE diesel generators.
Failure of initiating signal from the chilled water system:	No loss of safety function		
a) Contact closed or shorted	If failed signal is from operating lead chiller, the associated fan of the CRCS will continue to operate even if the lead chiller has tripped and the standby chiller has started.	Periodic testing	
	If failed signal is from the standby chiller which is not in operation, the two redundant units of the CRCS will operate.	Unit status indicating lights in the control room	
b) Contact open or open wiring	If the failed signal is from the operating lead chiller, the associated fan of the CRCS will trip. The standby unit will start only when the redundant temperature detection loops at the common return air duct detect high temperature. The operating chiller is then tripped and the standby chiller is started.	High temperature alarm together with status indicating lights of the units.	Alarms, hand switches, and indicating lights are located in the control room.

TABLE 7.3-22 (Continued)

Failure Mode	Effect on System	Detection	Remarks
Failure of the common exhaust duct airflow signal:	No loss of safety function of the system.		
a) Contact closed or shorted	If failed signal is for the operating fan, the operating fan and its associated chiller will trip. The standby unit of the CRCS will automatically start as soon as the standby chiller starts.	Fan failure alarm in the control room.	
	If failed signal is for the standby fan, the fan cannot operate when required.	Periodic testing	
b) Contact open or open wiring	No effect on the lead fan. If the failed signal is for the standby unit, the standby unit cannot operate when required. However, the redundant temperature detection loops at the common return air duct will detect return air high temperature and will trip the operating chiller and start the standby chiller. When the standby chiller starts, the standby fan of the CRCS automatically starts.	Periodic testing Return air high temperature alarm in the control room	

TA. 8 7.3-23

CONTROL STRUCTURE H&V SYSTEM (CSHVS)
FAILURE MODE AND EFFECTS ANALYSIS

Failure Mode	Effect on System	Detection	Remarks
Loss of offsite power	Momentary loss of the system. System will automatically restart when emergency power is ON and the chilled water system starts.	Alarm in the control room	Instrumentation and controls are powered from separate Class IE diesel generators.
Failure of initiating signal from the chilled water system:	No loss of safety function of the system.		
a) Contact closed or shorted	If failed signal is from operating lead chiller, the associated fan of the CSHVS will continue to operate even if the lead chiller has tripped and the standby chiller has started.	Periodic testing	
	If failed signal is from the standby chiller which is not in operation, the two redundant units of the CSHVS will operate.	Unit status indicating lights in the control room	
b) Contact open or open wiring	If the failed signal is from the operating lead chiller, the associated fan of the CSHVS will trip. The standby unit will start only when the redundant temperature detection loops at the common return air duct detect high temperature. The operating chiller is then tripped and the standby chiller is started.	High temperature alarm together with status indicating lights of the units.	Alarms, hand switches, and indicating lights are located in the control room.

TABLE 7.3-23 (Continued)

Failure Mode	Effect on System	Detection	Remarks
Failure of the common exhaust duct airflow signal:	No loss of safety function of the system.		
a) Contact closed or shorted	If failed signal is for the operating fan, the operating fan and its associated chiller will trip. The standby unit of the CSHVS will automatically start as soon as the standby chiller starts.	Fan failure alarm in the control room.	
	If failed signal is for the standby fan, the fan cannot operate when required.	Periodic testing	
b) Contact open or open wiring	No effect on the lead fan. If the failed signal is for the standby unit, the standby unit cannot operate when required. However, the redundant temperature detection loops at the common return air duct will detect return air high temperature and will trip the operating chiller and start the standby chiller. When the standby chiller starts, the standby fan of the CSHVS automatically starts.	Periodic testing Return air high temperature alarm in the control room	

TABLE 7.3-24

CONTROL STRUCTURE CHILLED WATER SYSTEM (CSCWS)
FAILURE MODE AND EFFECTS ANALYSIS

Failure Mode	Effect on System	Detection	Remarks
Failure of the chilled water low flow initiating signal:	No loss of safety function		
a) Contact closed or shorted	If the failed signal is for the standby loop, the standby loop will start and both loops will run.	Status indicating lights in the control room	
	If the failed signal is for the operating loop, the operating loop will continue to run.	Periodic testing	
b) Contact open or open wiring	If the signal failure is for the operating loop, the loop will continue to run.	Periodic testing	
	If the failed signal is for standby loop, the standby loop will not start when required.	Periodic testing	
Failure of any of the air handling units return air high temperature signal:	No loss of safety function		
a) Contact closed or shorted	If the signal failure occurs on the standby loop, the standby loop will start.	Status indicating light in the control room	
	If the signal failure occurs on the operating loop, both loops will operate.	Handswitch and status indicating lights in the control room	
b) Contact open or open wiring	If failure of the operating loop signal accompanied with high temperature occurs, the standby loop will be initiated.	Periodic testing High air temperature alarm Handswitch and status indicating lights.	
	If failure of the standby loop signal accompanied with high temperature occurs, the operating loop will trip and the standby loop will be initiated through loss of water flow in the operating loop.	Periodic testing High air temperature alarm Handswitch and status indicating lights.	

TABLE 7.3-24 (Continued)

Failure Mode	Effect on System	Detection	Remarks
Failure of any of the air handling units failure trip signal:	No loss of safety function		
a) Contact open or open wiring	If failed signal is for the operating loop, the operating loop will trip and the standby loop will start.	Handswitch and status indicating lights in the control room	
	If failed signal is for the standby loop, the operating loop will continue to run but the standby loop will not be able to start when required.	Periodic testing	
b) Contact closed or shorted	No effect on the running loop unless there is actual failure of the associated air handling unit, in which case the return air high temperature signal will trip the operating loop and standby loop starts.	Periodic testing Return air high temperature alarm and status indicating lights in the control room.	
	No effect on the standby loop.	Periodic testing	
Failure of emergency condenser water circulating pump failure trip signal:	No loss of safety function		
a) Contact closed or shorted	Failure of the running emergency condenser water circulating loop signal will allow the loop to run, unless a flow failure actually occurs.		
	Failure of the standby emergency condenser water circulating loop trip signal will not affect the starting of the standby loop.	Periodic testing	
	If this is the case the chiller will trip out on high condensing pressure, which will then trip the chilled water pump and start the standby loop.	Periodic testing, chiller failure alarm, handswitch and status indicating lights	

TABLE 7.3-24 (Continued)

Failure Mode	Effect on System	Detection	Remarks
b) Contact open or open wiring	Failure of the running emergency condenser water circulating loop signal will trip the associated chiller and chilled water pump, which in turn will initiate the standby loop.	Periodic testing Emergency condenser circulating water loop failure alarm Handswitch and status indicating lights	
	Failure of the standby emergency condenser water circulating loop signal will prevent the standby loop from starting.	Periodic testing	
Failure of chiller trip signal:	No loss of safety function		
a) Contact open or open wiring	If failed signal is for the operating loop, the operating loop is tripped and the standby loop starts automatically.	Status indicating lights in the control room and at the local chiller control panel	
	If failed signal is for the standby loop, the standby loop will not be able to start when required.	Periodic testing	
b) Contact closed or shorted	If failed signal is for the operating loop and there is actual failure of the chiller, the chilled water pump will continue to operate until tripped by the high temperature switch of any of the associated air handling units. The standby loop will start automatically.	Periodic testing Air handling units high temperature alarm in the control room	
	No effect on the standby loop	Periodic testing	

TABLE 7.3-24 (Continued)

Failure Mode	Effect on System	Detection	Remarks
Failure of the condenser water circulating pump trip signal (non-safety-related):	No loss of safety function. This control signal is cancelled out automatically during emergency conditions.		
a) Contact open or open wiring	If failed signal is for the operating loop, the loop is tripped and the standby loop starts automatically.	Status indicating lights in the control room	
	If failed signal is for the standby loop, the standby loop will not start when required.	Periodic testing	
b) Contact closed or shorted	No effect on the operating loop unless flow failure actually occurs. Low condenser water flow will trip the operating loop and the standby loop will start automatically.	Periodic testing	
	No effect on the standby loop unless the standby loop is operating and failure actually occurs.	Periodic testing	
Failure of any of the following emergency signals: LOCA (Unit 1) LOCA (Unit 2) Loss of offsite power	No loss of safety function. These signals are used to trip out the non-safety-related condenser water circulating pump and initiate the emergency condenser water circulating pump.		
a) Contact closed or shorted	The failed signal has no effect on the operating loop if the emergency service water system is not operating.	Periodic testing	
	If the failed signal is for the standby loop, the standby loop will not operate when required if its associated emergency service water loop is not in operation.	Periodic testing	

TABLE 7.3-24 (Continued)

Failure Mode	Effect on System	Detection	Remarks
b) Contact open or open wiring	The operating loop may trip out and the standby loop will start automatically.	Emergency operating procedure	
	If the failed signal is for the standby loop, the standby loop will not operate when required.	Periodic testing	

TABLE 7.3-25

BATTERY ROOMS EXHAUST SYSTEM
FAILURE MODE AND EFFECTS ANALYSIS

FAILURE MODE	EFFECT ON SYSTEM	DETECTION	REMARKS
Loss of offsite power	Momentary loss of the system. System will automatically restart when emergency power is ON.	Alarm in the control room.	Instrumentation and controls are powered from separate Class IE diesel generators.
Failure of control structure H&V system low airflow trip signal:	No loss of safety function		
a) Contact closed or shorted	No effect on the system	Periodic testing	
b) Contact open or open wiring	The control structure H&V system common discharge airflow detection loops are redundant. If the operating fan of the battery rooms exhaust system is tripped, the standby fan will automatically start	Periodic testing Position of hand control switches and fan status indicating lights	Hand control switches and status indicating lights are located in the control room.
Failure of the common exhaust duct airflow signal:	No loss of safety function of the system		
a) Contact closed or shorted	If failed signal is for operating (lead) fan, the fan trips and alarms. The standby unit automatically starts after a time delay.	Alarm in the control room	
	If failed signal is for the standby unit, the standby unit will start after a time delay, operate a few seconds and then trip itself out and alarm.	Alarm in the control room	

TABLE 7.3-25

BATTERY ROOMS EXHAUST SYSTEM
FAILURE MODE AND EFFECTS ANALYSIS

FAILURE MODE	EFFECT ON SYSTEM	DETECTION	REMARKS
b) Contact open or open wiring	If failed signal is for operating fan, the fan will not alarm when it fails. If failed signal is for the standby unit, the standby unit will not start on failure of the operating fan.	Periodic testing	

TABLE 7.3-26

CONTROL ROOM FLOOR COOLING SYSTEM (CRFCS)
FAILURE MODE AND EFFECTS ANALYSIS

Failure Mode	Effect on System	Detection	Remarks
Loss of offsite power	Momentary loss of the system. System will automatically restart when emergency power is ON and the chilled water system starts.	Alarm in the control room	Instrumentation and controls are powered from separate Class 1E diesel generators
Failure of initiating signal from the chilled water system:	No loss of safety function		
a) Contact closed or shorted	If failed signal is from operating lead chiller, the associated fan of the CRFCS will continue to operate even if the lead chiller has tripped and the standby chiller has started.	Periodic testing	
	If failed signal is from the standby chiller which is not in operation, the two redundant units of the CRFCS will operate.	Unit status indicating lights in the control room	
b) Contact open or open wiring	If the failed signal is from the operating lead chiller, the associated fan of the CRFCS will trip. The standby unit will start only when the redundant temperature detection loops at the common return air duct detect high temperature. The operating chiller is then tripped and the standby chiller is started.	High temperature alarm together with status indicating lights of the units.	Alarms, hand switches, and indicating lights are located in the control room.

TABLE 7.3-26 (Continued)

Failure Mode	Effect on System	Detection	Remarks
Failure of the common exhaust duct airflow signal:	No loss of safety function		
a) Contact closed or shorted	If failed signal is for the operating fan, the operating fan and its associated chiller will trip. The standby unit of the CRFCS will automatically start as soon as the standby chiller starts.	Fan failure alarm in the control room	
	If failed signal is for the standby fan, the fan cannot operate when required.	Periodic testing	
b) Contact open or open wiring	No effect on the lead fan. If the failed signal is for the standby unit, the standby unit cannot operate when required. However, the redundant temperature detection loops at the common return air duct will detect return air high temperature and will trip the operating chiller and start the standby chiller. When the standby chiller starts, the standby fan of the CRFCS automatically starts.	Periodic testing. Return air high temperature alarm in the control room	

Table 7.3-28

REACTOR PROTECTION SYSTEM RESPONSE TIMES

FUNCTIONAL UNIT	RESPONSE TIME (Seconds)
1. Intermediate Range Monitors	
a. Neutron Flux – High	NA
b. Inoperative	NA
2. Avg. Power Range Monitor*	
a. Neutron Flux – High (Setdown)	N/A
b. Simulated Thermal Power – High**	≤0.09***
c. Neutron Flux – High	≤0.09***
d. Inoperative	NA
e. 2-out of-4 Voter	≤0.05****
f. OPRM Trip	≤0.40***
3. Reactor Vessel Steam Dome Pressure – High	≤0.55***
4. Reactor Vessel Water Level – Low, Level 3	≤1.05***
5. Main Steam Line Isolation Valve – Closure	≤0.06
6. Main Steam Line Radiation – High	NA
7. Drywell Pressure – High	NA
8. Scram Discharge Volume Water Level – High	
a. Level Transmitter	NA
b. Float Switch	NA
9. Turbine Stop Valve – Closure	≤0.06
10. Turbine Control Valve Fast Closure, Trip Oil Pressure – Low	≤0.08#
11. Reactor Mode Switch Shutdown Position	NA
12. Manual Scram	NA
* Neutron detectors are exempt from response time testing. Response time shall be measured from the detector output or from the input of the first electronic component in the channel.	
** Not including simulated thermal power time constant.	
# Measured from actuation of fast-acting solenoid.	
*** Response time testing is not required.	
**** Measured from activation of the 2-out-of-4 Voter output.	

Table Rev. 53

Table 7.3-29

ISOLATION SYSTEM INSTRUMENTATION RESPONSE TIME

TRIP FUNCTION	RESPONSE TIME (Seconds)#
1. Primary Containment Isolation	
a. Reactor Vessel Water level	
1) Low, Level 3	NA
2) Low Low, Level 2	NA
3) Low Low Low, Level 1	NA
b. Drywell Pressure – High	NA
c. Manual initiation	NA
d. SGTS Exhaust Radiation – High[(b)]	NA
e. Main Steam Line Radiation – High[(b)]	≤ 10[(a)#####]
2. Secondary Containment Isolation	
a. Reactor Vessel Water Level – Low Low, Level 2	NA
b. Drywell Pressure – High	NA
c. Refuel Floor High Exhaust Duct Radiation – High[(b)]	NA
d. Railroad Access Shaft Exhaust Duct Radiation – High[(b)]	NA
e. Refuel Floor Wall Exhaust Duct Radiation – High[(b)]	NA
f. Manual Initiation	NA
3. Main Steam Line Isolation	
a. Reactor Vessel Water Level – Low Low Low, Level 1	≤ 1.0*‡
b. Main Steam Line Pressure – Low	≤ 1.0*###
c. Main Steam Line Flow – High	≤ 0.5*‡
d. Condenser Vacuum – Low	NA
e. Reactor Building Main Steam Line Tunnel Temperature – High	NA
f. Manual Initiation	NA
g. Turbine Building Main Steam Line Tunnel Temperature - High	NA
4. Reactor Water Cleanup System Isolation	
a. RWCU Δ Flow – High	≤ 10[(a)##]
b. RWCU Area Temperature – High	NA
c. SLCS Initiation	NA
d. Reactor Vessel Water Level – Low Low, Level 2	NA
e. RWCU Flow – High	NA
f. Manual Initiation	NA
5. Reactor Core Isolation Cooling System Isolation	
a. RCIC Steam Line Δ Pressure – High	NA
b. RCIC Steam Supply Pressure – Low	NA
c. RCIC Turbine Exhaust Diaphragm Pressure – High	NA
d. RCIC Equipment Room Temperature – High	NA
e. RCIC Pipe Routing Area Temperature – High	NA
f. RCIC Emergency Area Cooler Temperature – High	NA
g. Manual Initiation	NA
h. Drywell Pressure - High	NA

Table Rev. 53

Table 7.3-29

ISOLATION SYSTEM INSTRUMENTATION RESPONSE TIME

6. High Pressure Coolant Injection System Isolation	
a. HPCI Steam Flow – High	NA
b. HPCI Steam Supply Pressure – Low	NA
c. HPCI Turbine Exhaust Diaphragm Pressure – High	NA
d. HPCI Equipment Room Temperature – High	NA
e. HPCI Emergency Area Cooler Temperature – High	NA
f. HPCI Pipe Routing Area Temperature – High	NA
g. Manual Initiation	NA
h. Drywell Pressure - High	NA
7. RHR System Shutdown Cooling/Head Spray Mode Isolation	
a. Reactor Vessel Water Level – Low, Level 3	NA
b. Reactor Vessel (RHR Cut-In Permissive) Pressure – High	NA
c. RHR Flow - High	NA
d. Manual Initiation	NA
e. Drywell Pressure - High	NA

(a) The isolation system instrumentation response time shall be measured and recorded as a part of the ISOLATION SYSTEM RESPONSE TIME. Isolation system instrumentation response time specified includes the delay for diesel generator starting assumed in the accident analysis.

(b) Radiation detectors are exempt from response time testing. Response time shall be measured from detector output or the input of the first electronic component in the channel.

* Isolation system instrumentation response time for MSIVs only. No diesel generator delays assumed for MSIV Valves.

** Isolation system instrumentation response time for associated valves except MSIVs.

‡ Response time testing not required.

\# Isolation system instrumentation response time specified for the Trip Function actuating each valve group shall be added to isolation time shown in Table 3.6.3-1 and 3.6.5.2-1 for valves in each valve group to obtain ISOLATION SYSTEM RESPONSE TIME for each valve.

\## With time delay of 45 seconds. Response time testing of isolating relay is not required.

\### Response time testing of sensors is not required.

\#### With time delay of 3 seconds.

\##### Response time testing of relays for function 1e (10 second requirement) is not required. The sensor response time testing requirement for functions 1e (10 second requirement) is met by testing the sensor to the 1 second requirement.

TABLE 7.3-30

EMERGENCY CORE COOLING SYSTEM RESPONSE TIMES

TRIP FUNCTION	RESPONSE TIME (Seconds)
1. **Core Spray System**	
a. Reactor Vessel Water Lever - Low Low Low, Level 1	≤ 34*
b. Drywell Pressure - High	≤ 34*
c. Reactor Vessel Steam Dome Pressure - Low	≤ 34*
d. Manual Initiation	NA
2. **Low Pressure Coolant Injection Mode of RHR System**	
a. Reactor Vessel Water Level - Low Low Low, Level 1	≤ 40*
b. Drywell Pressure - High	≤ 40*
c. Reactor Vessel Steam Dome Pressure - Low	
1) System Initiation	≤ 40*
2) Recirculation Discharge Valve Closure	≤ 40*
d. Manual Initiation	NA
3. **High Pressure Coolant Injection System**	
a. Reactor Vessel Water Level - Low Low, Level 2	≤ 30*
b. Drywell Pressure - High	≤ 30*
c. Condensate Storage Tank Level - Low	NA
d. Reactor Vessel Water Level - High, Level 8	NA
e. Suppression Pool Water Level - High	NA
f. Manual Initiation	NA
4. **Automatic Depressurization System**	
a. Reactor Vessel Water Level - Low Low Low, Level 1	NA
b. Drywell Pressure - High	NA
c. ADS Timer	NA
d. Core Spray Pump Discharge Pressure - High	NA
e. RHR LPCI Mode Pump Discharge Pressure - High	NA
f. Reactor Vessel Water Lever - Low, Level 3	NA
g. ADS Drywell Pressure Bypass Timer	NA
h. Manual Inhibit	NA
i. Manual Initiation	NA
5. **Loss of Power**	
a. 4.16 kV ESS Bus Undervoltage (Loss of Voltage < 20%)	NA
b. 4.16 kV ESS Bus Undervoltage (Degraded Voltage < 65%)	NA
c. 4.16 kV ESS Bus Undervoltage (Degraded Voltage < 93%)	NA
d. 480V ESS Bus OB565 (Degraded Voltage < 65%)	NA
e. 480V ESS Bus OB565 (Degraded Voltage < 92%)	NA

* Response time testing of sensors and relays is not required.

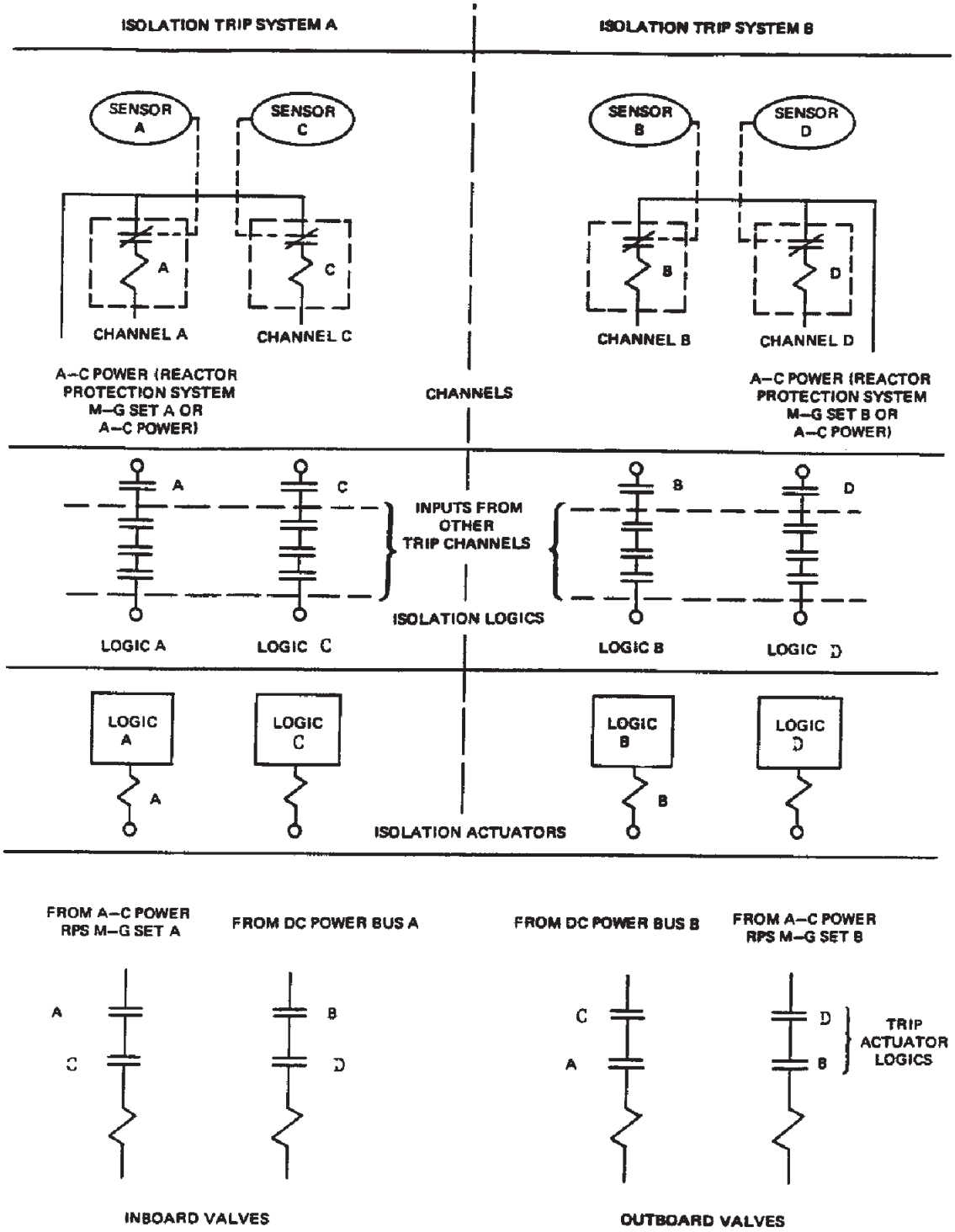

FSAR REV.65

SUSQUEHANNA STEAM ELECTRIC STATION
UNITS 1 & 2
FINAL SAFETY ANALYSIS REPORT

ISOLATION CONTROL SYSTEM FOR
MAIN STEAM LINE ISOLATION
VALVES

FIGURE 7.3-2, Rev 49

AutoCAD: Figure Fsar 7_3_2.dwg

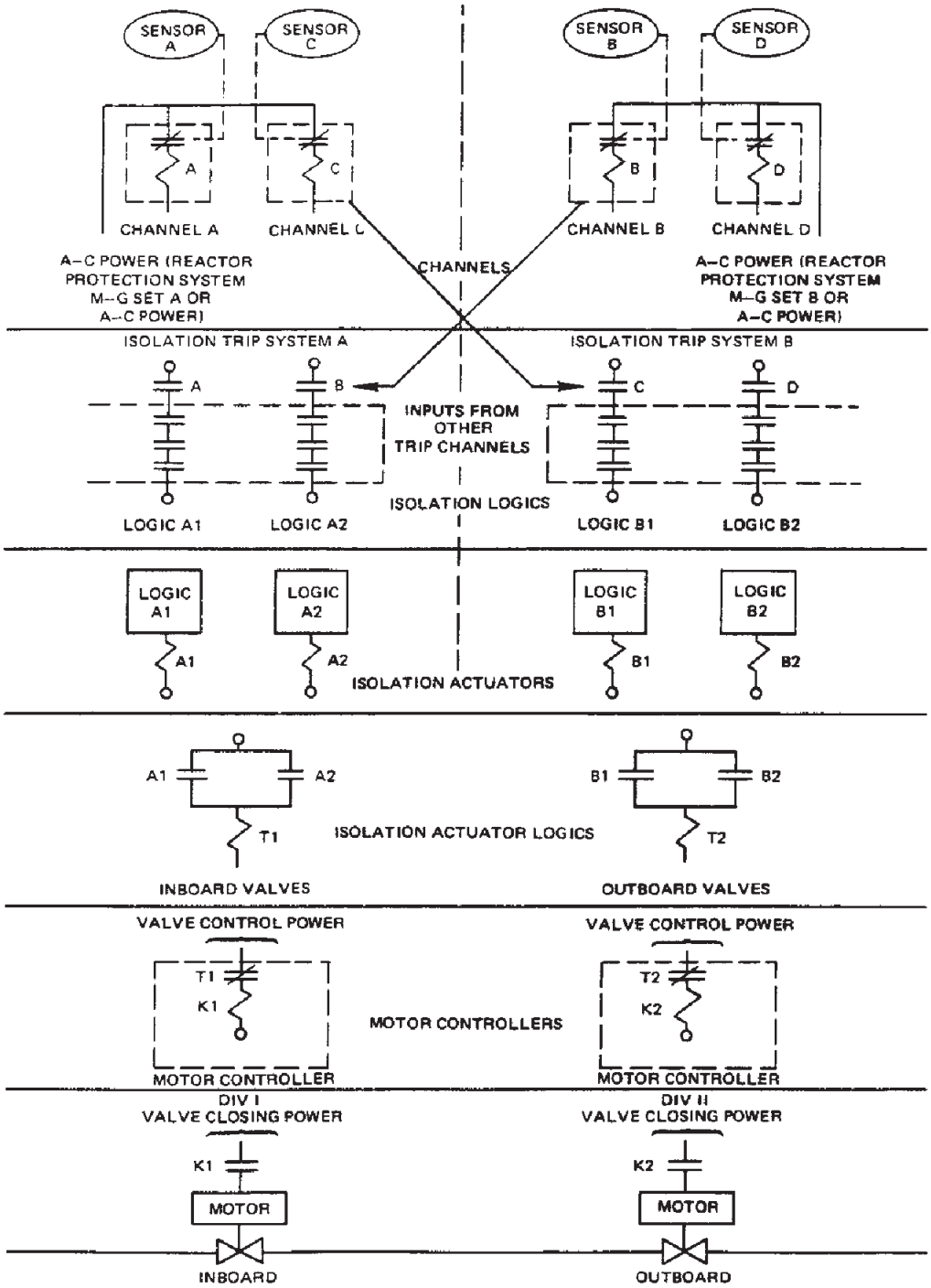

FSAR REV.65

SUSQUEHANNA STEAM ELECTRIC STATION
UNITS 1 & 2
FINAL SAFETY ANALYSIS REPORT

ISOLATION CONTROL SYSTEM
USING MOTOR-OPERATED VALVES

FIGURE 7.3-3, Rev 49

AutoCAD: Figure Fsar 7_3_3.dwg

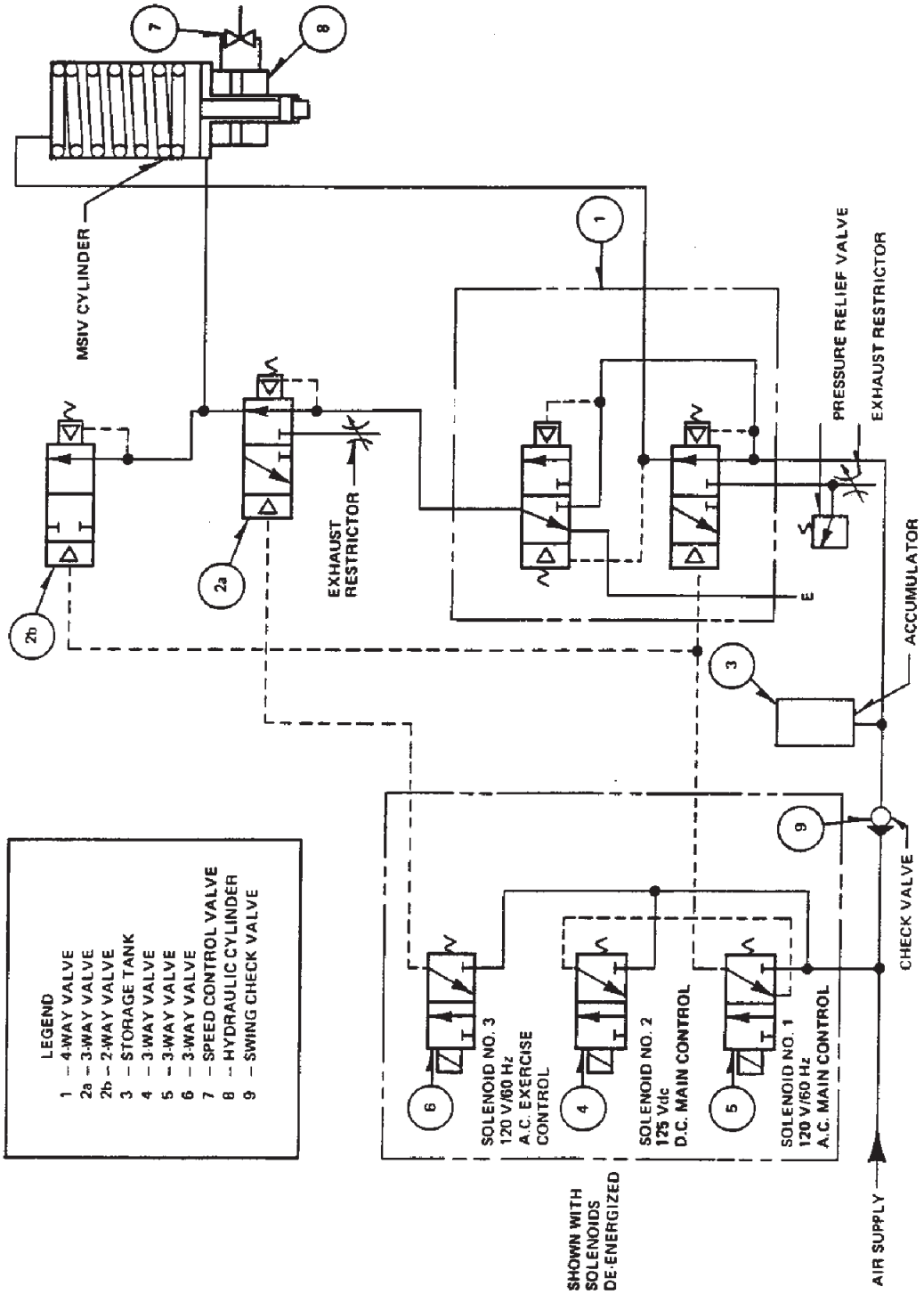

FSAR REV.65

SUSQUEHANNA STEAM ELECTRIC STATION
UNITS 1 & 2
FINAL SAFETY ANALYSIS REPORT

MAIN STEAM LINE ISOLATION
VALVE (SCHEMATIC)

FIGURE 7.3-4, Rev 49

AutoCAD: Figure Fsar 7_3_4.dwg

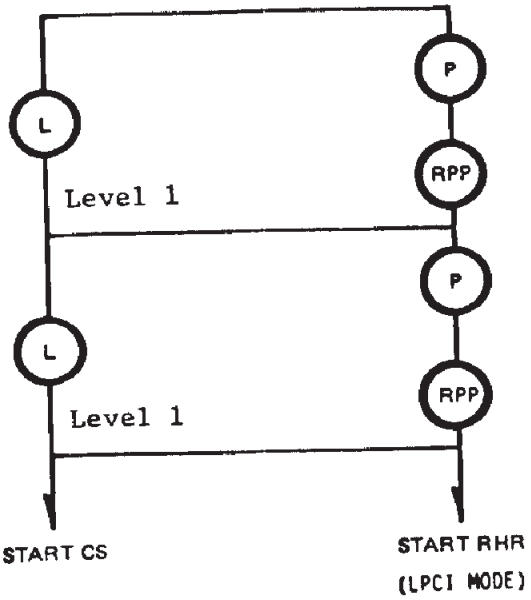

NOTE:
FOR DETAILED LOGIC
See Figure 7.3-9 & 7.3-10

Δt – TIME DELAY

L – LOW REACTOR WATER LEVEL

P – HIGH DRYWELL PRESSURE

RPP – REACTOR PRESSURE PERMISSIVE

PP – PUMP PRESSURE PERMISSIVE

FSAR REV.65

SUSQUEHANNA STEAM ELECTRIC STATION
UNITS 1 & 2
FINAL SAFETY ANALYSIS REPORT

INITIATION LOGIC -
ADS, CS, RHR

FIGURE 7.3-5-1, Rev 48

AutoCAD: Figure Fsar 7_3_5_1.dwg

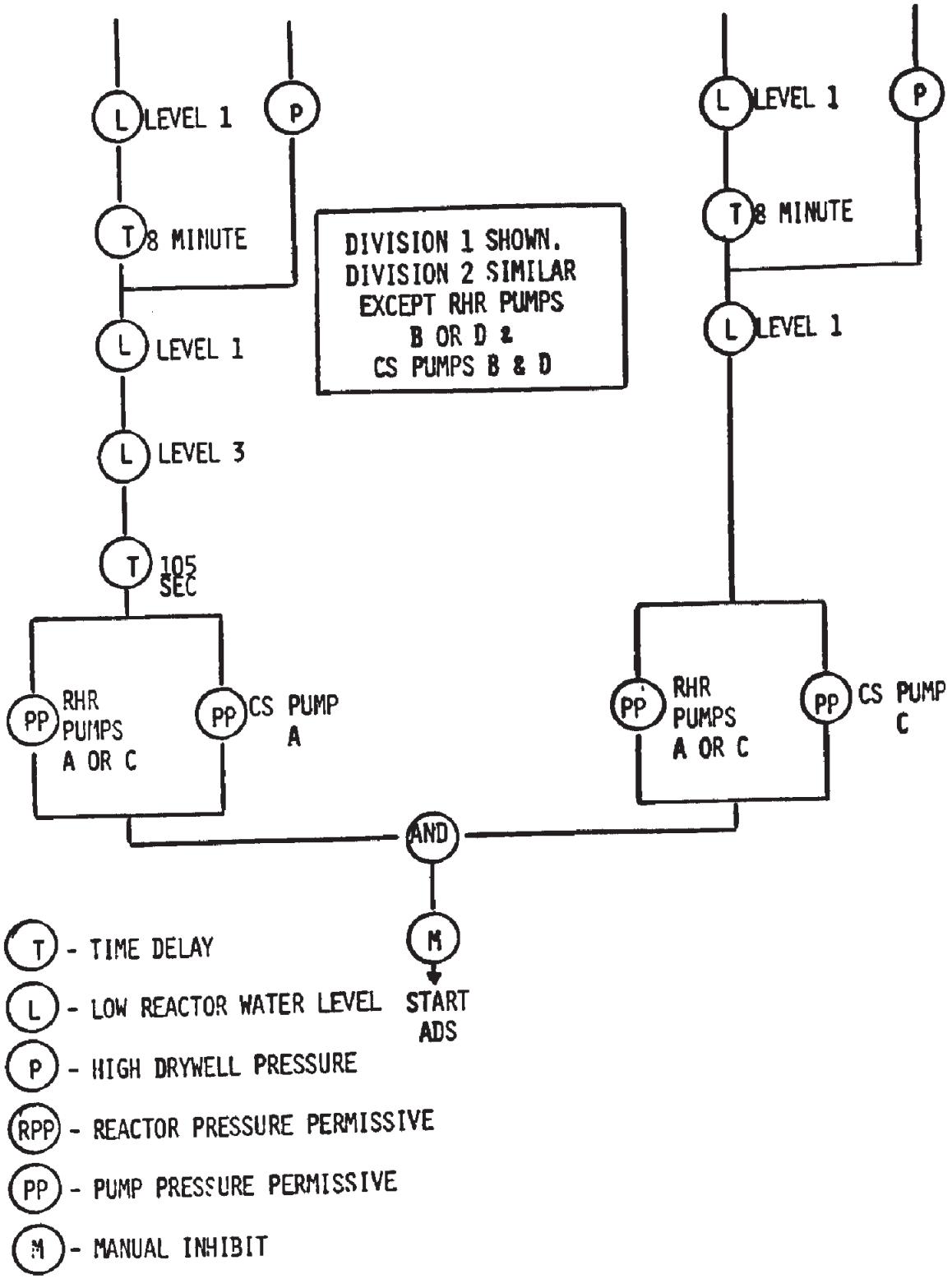

FSAR REV.65

SUSQUEHANNA STEAM ELECTRIC STATION
UNITS 1 & 2
FINAL SAFETY ANALYSIS REPORT

ADS INITIATION LOGIC

FIGURE 7.3-5-2, Rev 48

AutoCAD: Figure Fsar 7_3_5_2.dwg

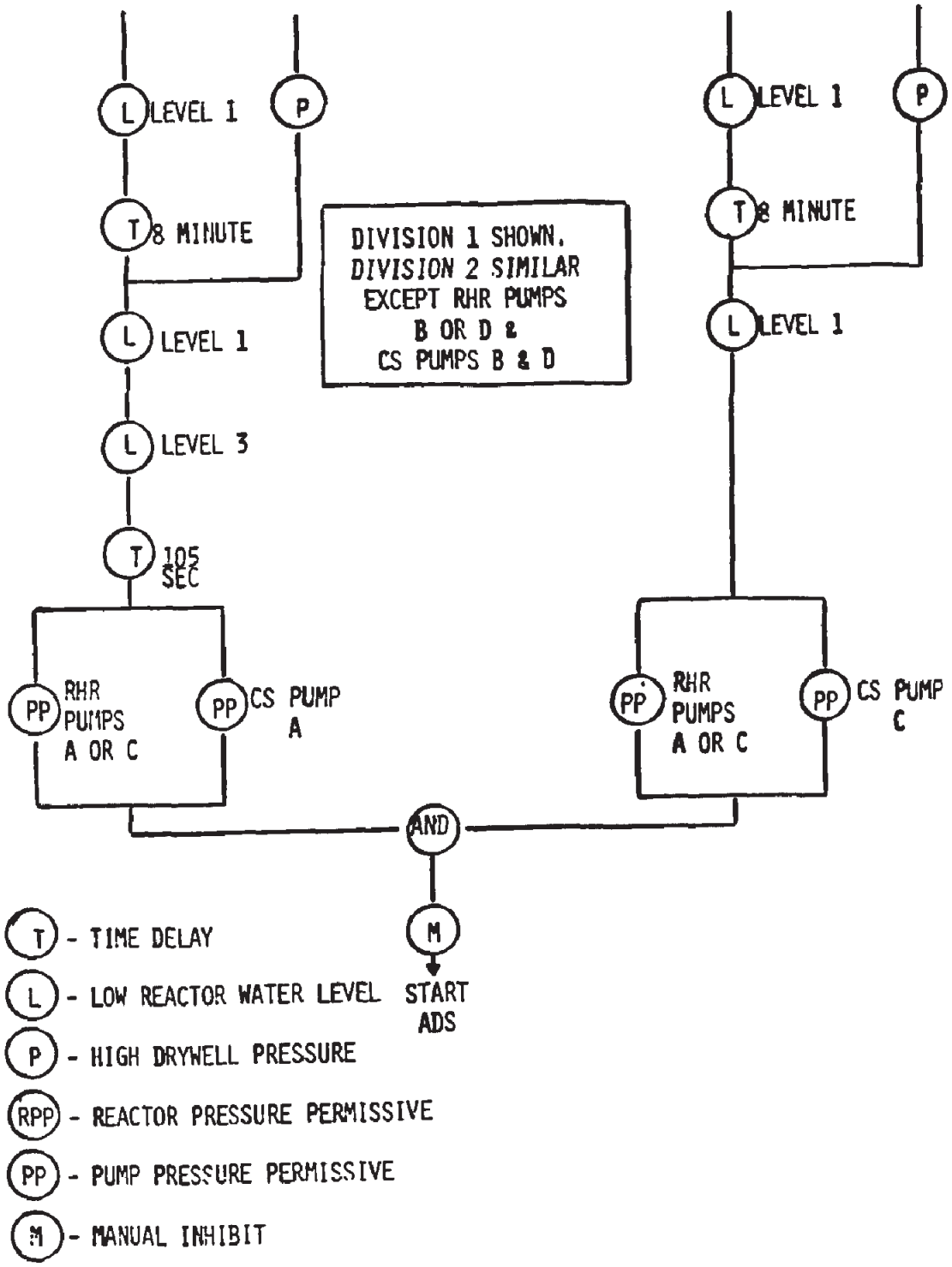

FSAR REV.65

SUSQUEHANNA STEAM ELECTRIC STATION
UNITS 1 & 2
FINAL SAFETY ANALYSIS REPORT

UNIT 2
ADS INITIATION LOGIC

FIGURE 7.3-5-3, Rev 48

AutoCAD: Figure Fsar 7_3_5_3.dwg

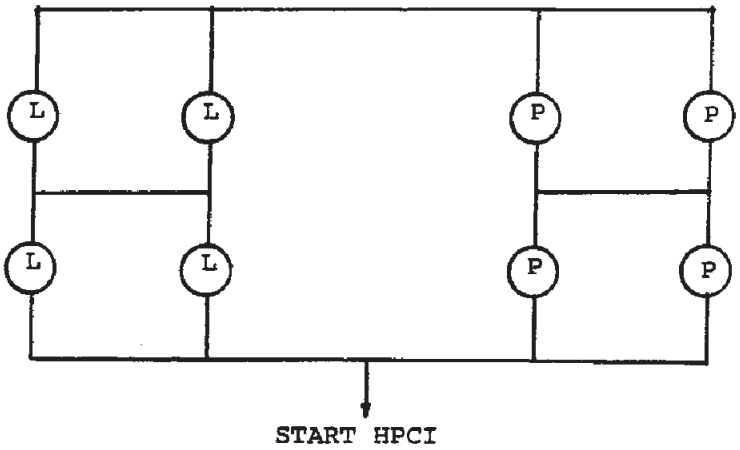

RCIC

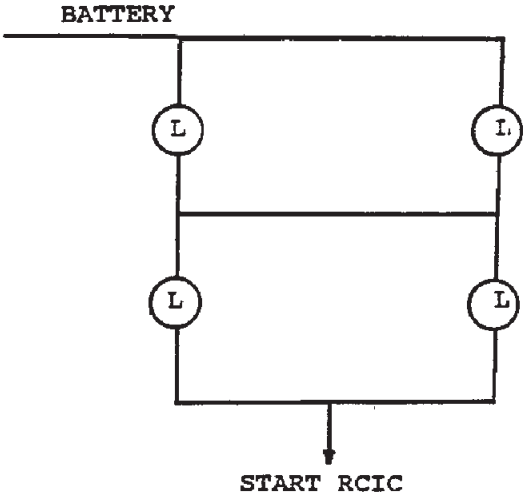

L -REACTOR VESSEL WATER LEVEL

P -HIGH DRYWELL PRESSURE

FSAR REV.65

SUSQUEHANNA STEAM ELECTRIC STATION
UNITS 1 & 2
FINAL SAFETY ANALYSIS REPORT

INITIATION LOGIC -
HPCI,RCIC

FIGURE 7.3-6, Rev 49

AutoCAD: Figure Fsar 7_3_6.dwg

FIGURE 7.3-7-1 REPLACED BY DWG. M1-E41-65, SH. 1

FIGURE 7.3-7-2 REPLACED BY DWG. M1-E41-65, SH. 2

FIGURE 7.3-7-3 REPLACED BY DWG. M1-E41-65, SH. 3

FIGURE 7.3-7-4 REPLACED BY DWG. M1-E41-65, SH. 4

FIGURE 7.3-7-5 REPLACED BY DWG. M1-E41-65, SH. 5

FIGURE 7.3-8-1 REPLACED BY DWG. M1-B21-92, SH. 1

FIGURE 7.3-8-2 REPLACED BY DWG. M1-B21-92, SH. 2

FIGURE 7.3-8-3 REPLACED BY DWG. M1-B21-92, SH. 3

FIGURE 7.3-8-4 REPLACED BY DWG. M1-B21-92, SH. 4

FIGURE 7.3-8-5 REPLACED BY DWG. M1-B21-92, SH. 5

FIGURE 7.3-8-6 REPLACED BY DWG. M1-B21-92, SH. 6

FIGURE 7.3-9-1 REPLACED BY DWG. M1-E21-3, SH. 1

FIGURE 7.3-9-2 REPLACED BY DWG. M1-E21-3, SH. 2

FIGURE 7.3-9-3 REPLACED BY DWG. M1-E21-3, SH. 3

FIGURE 7.3-10-1 REPLACED BY DWG. M1-E11-51, SH. 1

FIGURE 7.3-10-2 REPLACED BY DWG. M1-E11-51, SH. 2

FIGURE 7.3-10-3 REPLACED BY DWG. M1-E11-51, SH. 3

FIGURE 7.3-10-4 REPLACED BY DWG. M1-E11-51, SH. 4

FIGURE 7.3-10-5 REPLACED BY DWG. M1-E11-51, SH. 5

FIGURE 7.3-11-1 REPLACED BY DWG. M1-D12-1, SH. 1

FIGURE 7.3-11-2 REPLACED BY DWG. M1-D12-1, SH. 2

FIGURE 7.3-11-3 REPLACED BY DWG. M1-D12-1, SH. 3

FIGURE 7.3-11-4 REPLACED BY DWG. M1-D12-1, SH. 4

FIGURE 7.3-11-5 REPLACED BY DWG. M1-D12-1, SH. 5

7.4 SYSTEMS REQUIRED FOR SAFE SHUTDOWN

This section describes instrumentation and control systems that are required to establish and maintain safe reactor shutdown conditions. Two shutdown conditions are addressed: hot shutdown and cold shutdown. In hot shutdown the reactor is in the shutdown mode and the reactor coolant temperature is greater than 212°F. In cold shutdown the reactor is also in the shutdown mode but the coolant temperature is less than 212°F and the reactor is vented.

7.4.1 Description

The following systems are provided for safe shutdown of the reactor. Responsibility is noted.

- Reactor Core Isolation Cooling (RCIC) System, NSSS
- Standby Liquid Control System (SLCS), NSSS
- Residual Heat Removal System (RHRS) Reactor Shutdown Cooling System Mode, NSSS
- Reactor Shutdown from Outside the Control Room (Remote Shutdown Panels) Non-NSSS

7.4.1.1 Reactor Core Isolation Cooling (RCIC) System - Instrumentation and Controls

7.4.1.1.1 System Identification

7.4.1.1.1.1 Function

The Reactor Core Isolation Cooling System consists of a turbine, pump, piping, valves, accessories, and instrumentation designed to assure that sufficient reactor water inventory is maintained in the reactor vessel thus assuring continuity of core cooling. Reactor vessel water is maintained or supplemented by the RCIC system during the following conditions:

(1) When the reactor vessel is isolated and yet maintained in the hot standby condition;

(2) When the reactor vessel is isolated and accompanied by a loss of normal coolant flow from the reactor feedwater system;

(3) When a complete plant shutdown under conditions of loss of normal feedwater system is started before the reactor is depressurized to a level where the reactor shutdown cooling mode of the RHR system can be placed into operation.

7.4.1.1.1.2 Classification

Electrical components for the RCIC system are classified as Safety Class 2 and Seismic Category I.

7.4.1.1.2 Power Sources

RCIC logic and outboard RCIC isolation valve logic are powered from 125 VDC Bus A. Inboard RCIC isolation valve logic is powered from 125 VDC Bus B.

7.4.1.1.3 Equipment Design

7.4.1.1.3.1 General

When actuated, the RCIC system pumps water from either the condensate storage tank or the suppression pool to the reactor vessel. The RCIC system includes one turbine-driven pump, one barometric condenser, one DC vacuum pump, one DC condensate pump, automatic valves, control devices for this equipment, sensors, and logic circuitry. The arrangement of equipment and control devices is shown in Dwgs. M-149, Sh. 1 and M-150, Sh. 1.

Pressure and level switches used in the RCIC system are located on instrument panels outside the drywell and locally at the CST. The only operating components of the RCIC system that are located inside the drywell are the inboard steamline isolation valve, the steamline warm-up line isolation valve, and one of the two check valves on the feedwater line into which the turbine driven RCIC pump discharges.

The rest of the RCIC system control and instrumentation components are located in the reactor building. Cables connect the sensors to control circuitry in the control structure.

A design flow functional test of the RCIC system may be performed during normal plant operation by drawing suction from the condensate storage tank and discharging through a full flow test return line to the condensate storage tank. All components of the RCIC system are capable of individual functional testing during normal plant operation. The control system provides automatic return from test to operating mode if system initiation is required. There are three exceptions:

(1) The flow controller in manual mode. This feature is required for operation flexibility during system operation.

(2) Steam inboard/outboard isolation valves closed. Closure of either or both of these valves requires operator action to properly sequence their opening. An alarm sounds when either of these valves leaves the fully open position.

(3) Breakers have been manually racked out-of-service.

7.4.1.1.3.2 Initiating Circuits

Reactor vessel low water level is monitored by four indicating type level switches that sense the difference between the pressure to a constant reference leg of water and the pressure due to the actual height of water in the vessel. The two pairs of sensing lines for the switches are physically separated from each other and tap off the reactor water vessel at widely separated points.

The RCIC system is automatically initiated only by low water level utilizing a one-out-of-two twice logic.

The RCIC system is initiated automatically after the receipt of a reactor vessel low water level signal and produces the design flow rate within 30 seconds. The system then functions to provide

design makeup water flow to the reactor vessel until the amount of water delivered to the reactor vessel is adequate to restore vessel level, at which time the RCIC system automatically shuts down. The controls are arranged to allow remote-manual startup, operation, and shutdown.

The RCIC turbine is functionally controlled as shown in Dwgs. M1-E51-80, Sh. 1, M1-E51-80, Sh. 2, M1-E51-80, Sh. 3, and M1-E51-80, Sh. 4. The turbine governor limits the turbine speed and adjusts the turbine steam control valve so that design pump discharge flow rate is obtained. The flow signal used for automatic control of the turbine is derived from a differential pressure measurement across a flow element in the RCIC system pump discharge line.

The turbine is automatically shut down by tripping the turbine trip and throttle valve closed if any of the following conditions are detected:

(1) Turbine overspeed

(2) High turbine exhaust pressure

(3) RCIC isolation signal from logic "A" or "B"

(4) Low pump suction pressure

(5) Manual trip actuated by the operator.

Turbine overspeed indicates a malfunction of the turbine control mechanism. High turbine exhaust pressure indicates a condition that threatens the physical integrity of the exhaust line. Low pump suction pressure warns that cavitation and lack of cooling can cause damage to the pump which could place it out of service. A turbine trip is initiated for these conditions so that if the causes of the abnormal conditions can be found and corrected, the system can be quickly restored to service. The trip settings are selected far enough from normal values so that a spurious turbine trip is unlikely, but not so far that damage occurs before the turbine is shut down. Turbine overspeed is detected by a standard turbine overspeed mechanical device. Two pressure switches are used to detect high turbine exhaust pressure; either switch can initiate turbine shutdown. One pressure switch is used to detect low RCIC system pump suction pressure.

The turbine is automatically shut down by closing the steam supply valve if reactor vessel high water level is detected. High water level in the reactor vessel indicates that the RCIC system has performed satisfactorily in providing makeup water to the reactor vessel. Further increase in level could result in RCIC system turbine damage caused by gross carry-over of moisture. To prevent this, a high water level trip is used to initiate closure of steam supply valve to shut off the steam to the turbine and halt RCIC operation. The system will automatically re-initiate if the water level decreases to the reactor water level trip point. Two level switches that sense differential pressure are arranged to require that both switches trip to initiate a turbine shutdown.

7.4.1.1.3.3 Logic and Sequencing

The scheme used for initiating the RCIC system is shown in Dwgs. M1-E51-80, Sh. 1, M1-E51-80, Sh. 2, M1-E51-80, Sh. 3, and M1-E51-80, Sh. 4.

7.4.1.1.3.4 Bypasses and Interlocks

To prevent the pump overheating at reduced flow, a pump discharge bypass is provided to route the water from the pump back to the suppression pool.

The bypass is controlled by an automatic, DC motor-operated valve whose control scheme is shown in Dwgs. M1-E51-80, Sh. 1, M1-E51-80, Sh. 2, M1-E51-80, Sh. 3, and M1-E51-80, Sh. 4. At RCIC high flow, the valve is closed; conversely, at low flow, the valve is opened. A switch actuated by the pressure difference across a flow element in the RCIC pump discharge pipeline provides the signals.

To prevent the RCIC steam supply pipeline from filling up with water and cooling excessively, a drain pot, steamline drain, and appropriate valves are provided in a drain pipeline arrangement just upstream of the turbine supply valve. The control scheme is shown in Dwgs. M1-E51-80, Sh. 1, M1-E51-80, Sh. 2, M1-E51-80, Sh. 3, and M1-E51-80, Sh. 4. The controls position valves so that during normal operation steamline drainage is routed to the main condenser. Upon receipt of an RCIC initiation signal, the drainage path is isolated. The water level in the steamline drain pot is controlled by a level switch and a direct acting solenoid valve which energizes to allow condensate to flow out of the drain pot.

During test operation, the RCIC pump discharge is routed to the condensate storage tank. Two DC motor-operated valves are installed in the pump discharge to condensate storage tank pipeline. The piping arrangement is shown in Dwg. M-149, Sh. 1 and Dwg. M-150, Sh. 1. The control scheme for the valves is shown in Dwgs. M1-E51-80, Sh. 1, M1-E51-80, Sh. 2, M1-E51-80, Sh. 3, and M1-E51-80, Sh. 4. Upon receipt of an RCIC initiation signal, the valves close and remain closed. The pump suction and discharge to condensate storage tank valves are interlocked closed if the suppression pool suction valve is fully open. Numerous indications pertinent to the operation and condition of the RCIC are available to the main control room operator. Dwgs. M1-E51-80, Sh. 1, M1-E51-80, Sh. 2, M1-E51-80, Sh. 3, and M1-E51-80, Sh. 4 show the various indications provided.

7.4.1.1.3.5 Redundancy & Diversity

On a network basis, the RCIC is redundant to HPCI for the safe shutdown function. Therefore, RCIC as a system by itself is not required to be redundant, although the instrument channels are redundant for operational availability purposes.

Diversity of initiating signals for RCIC is not required for the RCIC system.

The RCIC is actuated by reactor low water level. Four level sensors in a one-out-of-two twice circuit supply this signal.

7.4.1.1.3.6 Actuated Devices

All automatic valves in the RCIC are equipped with remote-manual test capability, so that the entire system can be operated from the control room. For control room operation, all required components of the RCIC controls operate independently of ac power.

To assure that the RCIC can be brought to design flow rate within 30 seconds from the receipt of the initiation signal, the following maximum operating times for essential RCIC valves are provided by the valve operation mechanisms:

RCIC turbine steam supply valve	20 seconds (opening)
RCIC pump discharge valves	15 seconds
RCIC pump minimum flow bypass valve	5 seconds

The operating time is the time required for the valve to travel from the fully closed to the fully open position, or vice versa. The two RCIC steam supply line isolation valves are normally open and they are intended to isolate the RCIC steam line in the event of a break in that line. A normally closed dc motor-operated valve is located in the turbine steam supply pipeline just upstream of the turbine stop valve. The control scheme for this valve is shown in Dwgs. M1-E51-80, Sh. 1, M1-E51-80, Sh. 2, M1-E51-80, Sh. 3, and M1-E51-80, Sh. 4. Upon receipt of a RCIC initiation signal this valve opens approximately 40%, then after a seven (7) second time delay, opens fully and remains open until closed by operator action from the main control room, or by reactor vessel high water level.

Two isolation valves are provided in the steam supply line to the turbine. The valve inside the primary containment is normally open and is controlled by an ac motor. The valve outside the primary containment is normally open and is controlled by a dc motor. The bypass line is used to equalize and preheat the steamline, and is normally closed in standby. The three (3) valves automatically close upon receipt of an RCIC isolation signal. An isolation signal results from RCIC steam line high differential pressure (flow), RCIC turbine exhaust diaphragm high pressure, low reactor pressure (steam supply), or high temperature around the steam line. The isolation signal resulting from steamline high differential pressure incorporates a time delay to prevent inadvertent isolation due to transient events. Since the RCIC isolation signal is provided from a logic "A" or a logic "B", the Leak Detection System isolation function meets the intent of IEEE-279-1971, "Protection System Criteria."

The instrumentation for isolation consists of the following:

Outboard RCIC Turbine Isolation Valve

(1) Ambient temperature switches-RCIC equipment area high temperature.

(2) Ambient temperature switch-RCIC pipe routing area high temperature.

(3) Differential pressure switches-RCIC steam line high flow or instrument line break.

(4) Two pressure switches-RCIC turbine exhaust diaphragm high pressure. Both switches must activate to isolate.

(5) Pressure switch-RCIC steam supply pressure low.

(6) Manual isolation if the system has been initiated.

Inboard RCIC Turbine Isolation Valve

(1) A similar set of instrumentation causes the inboard valve to isolate except for the manual isolation feature.

Two pump suction valves are provided in the RCIC system. One valve lines up pump suction from the condensate storage tank; the other from the suppression pool. The RCIC is normally aligned to the CST, therefore upon receipt of a RCIC initiation signal, the CST suction valve is found to be open. If the water level in the CST falls below a predetermined level, the suppression pool suction valve automatically opens. The CST and suppression pool suction valves are interlocked in such a manner that when the suppression pool suction valve automatically opens, the CST suction valve automatically closes. Both valves are operated by dc motors. The control arrangement is shown in Dwgs. M1-E51-80, Sh. 1, M1-E51-80, Sh. 2, M1-E51-80, Sh. 3, and M1-E51-80, Sh. 4.

One dc motor-operated RCIC pump discharge valve and one dc motor operated injection shutoff valve in the pump discharge pipeline are provided. The control scheme for these valves is shown in Dwgs. M1-E51-80, Sh. 1, M1-E51-80, Sh. 2, M1-E51-80, Sh. 3, and M1-E51-80, Sh. 4. These valves are arranged to open upon receipt of the RCIC initiation signal. The injection shutoff valve closes automatically upon receipt of a turbine trip signal.

7.4.1.1.3.7 Separation

As in the ECCS, the RCIC system is separated into Divisions 1 and 2. The RCIC system is a Division 1 system, but the inboard steamline valve is in Division 2. The inboard valve is an ac powered valve. The rest of the valves are dc powered valves. Division 1 logic is powered by the 125 VDC Division 1 bus A, and the Division 2 logic is powered by the 125 VDC Division 2 bus B. In order to maintain the required separation, RCIC logic relays, cabling, instruments and manual controls are mounted so that physical separation of Division 1 and Division 2 is maintained.

The auxiliary systems which support the RCIC system are: the barometric condenser system which prevents turbine leakage, and the lube oil cooling water system. An initiation signal starts the condenser vacuum pump and opens the cooling water valve which initiates the barometric condenser and oil cooling action. The condenser vacuum pump remain on until manually turned off.

The method used for identifying power and signal cables and raceways as safety-related equipment, and the scheme used to distinguish between redundant cables and raceways are discussed in Section 3.12. Instrument panels are identified in accordance with the requirements of IEEE 279-1971.

7.4.1.1.3.8 Testability

The RCIC system may be tested to design flow during normal plant operation as discussed in Subsection 7.4.1.1.3.1. Water is drawn from the condensate storage tank and discharged through a full flow test return line to the condensate storage tank. The discharge valve from the pump to the feedwater line remains closed during the test and reactor operation remains undisturbed. Design of the control system is such that the RCIC system returns to the operating mode from test if systems initiation is required with the exceptions discussed in Subsection 7.4.1.1.3.1.

Testing of the initiation transducers which are located outside the drywell is accomplished by valving out each transducer and applying a test pressure source. This verifies the operability of the sensor as well as the calibration range. Observation of relay contact closure of the relays directly coupled to the initiation transducers verifies the operability of the instrument channel.

7.4.1.1.4 Environmental Considerations

The only RCIC control components located inside the drywell that must remain functional in the environment resulting from a LOCA are the control mechanisms for the inside isolation valve and the steamline warm-up line isolation valve. The environmental capabilities of these valves are discussed in Subsection 7.3.1.1a.2. The RCIC control and instrumentation equipment located outside the drywell is selected in consideration of the environments in which it must operate. The safety-related RCIC instrumentation is seismically qualified to remain functional following a Safe Shutdown Earthquake (SSE).

7.4.1.1.5 Operational Considerations

7.4.1.1.5.1 General Information

Normal core cooling is required in the event the reactor becomes isolated during normal operation from the main condenser by a closure of the MSIV. Cooling is necessary due to the core fission product decay heat. Steam is vented through the pressure relief/safety valves to the suppression pool. The RCIC system maintains reactor water level by providing the makeup water. Initiation and control are automatic.

7.4.1.1.5.2 Reactor Operator Information

The following items are located in the main control room for operator information:

Analog Indication

(1) RCIC Turbine Inlet Pressure

(2) RCIC Pump Suction Pressure

(3) RCIC Pump Discharge Pressure

(4) RCIC Pump Discharge Flow

(5) RCIC Turbine Speed

(6) RCIC Turbine Exhaust Line Pressure

Indicating Lamps

(1) Position of all motor-operated valves.

(2) Position of all solenoid-operated valves.

(3) Turbine trip.

(4) All sealed-in circuits.

(5) Pump status.

(6) Division in Test.

Annunciators

Annunciators are provided as shown in Figure 7.4-1 and Dwgs. M1-E51-80, Sh. 1, M1-E51-80, Sh. 2, M1-E51-80, Sh. 3, and M1-E51-80, Sh. 4.

7.4.1.1.5.3 Setpoints

Instrument settings for the RCIC system controls and instrumentation are listed in technical specifications.

The reactor vessel low water level setting for RCIC system initiation is selected high enough above the active fuel to start the RCIC system in time to prevent the need for the use of the low pressure engineering safeguards. The water level setting is far enough below normal levels that spurious RCIC system startups are avoided.

7.4.1.2 Standby Liquid Control System (SLCS) - Instrumentation & Controls

7.4.1.2.1 System Identification

7.4.1.2.1.1 Function

The instrumentation and controls for the SLCS are designed to initiate and continue injection of a liquid neutron absorber into the reactor when manually called upon to do so. This equipment also provides the necessary controls to maintain this liquid chemical solution above saturation temperature in readiness for injection.

7.4.1.2.1.2 Classification

The SLCS is a backup method of manually shutting down the reactor to cold subcritical conditions by independent means other than the normal method by the control rod system. The system will also be used to buffer suppression pool pH to prevent Iodine re-evolution following a postulated design basis loss of coolant accident. The standby liquid control process equipment, instrumentation, and controls essential for injection of the neutron absorber solution into the reactor are designed to withstand Seismic Category I earthquake loads.

7.4.1.2.2 Power Sources

The SLCS injection valve, pump A, and explosive valve A are powered by a different 480 VAC emergency bus than pump B and explosive valve B. The two tank heaters are also powered from a 480 VAC emergency bus.

Valve position indicating lights (non-Class 1E loads) are fed from a Division 1 120V instrument ac power supply. The pump pressure and storage tank level instruments are fed from a non-Class 1E 120V instrument ac power supply.

Heat tracing for pump suction piping is a non-Class 1E load which is fed from a Class 1E (Division 1) MCC 1B217 (2B217) for reliable power. Loads for these two MCC's are shown on drawing E9, Sh. 36 and Sh. 45 of Section 1.7. In accordance with Section 8.1.6(n), a second breaker of a two-breakers-in-series isolation system is installed near the non-Class 1E heat tracing panel to provide isolation between the Class 1E power supply and non-Class 1E load.

7.4.1.2.3 Equipment Design

7.4.1.2.3.1 General

The SLCS (Dwg. M-148, Sh. 1) is a special “plant capability” event system. The system is identified as a safe shutdown system having a safety-related classification. Boron injection from the SCL system is required for suppression pool pH control during a DBA-LOCA. The maintenance of the suppression pool pH level above 7.0 is achieved by boron injected to the suppression pool from the SLC system via the reactor vessel to prevent re-evolution of iodine from the suppression pool water. Consequently, operation of the SLC system includes reactor modes and timing during a DBA LOCA. The SCL System will be required to be operable in Mode 3.

The special consideration evens are:

1. Plant Capability to Shutdown the Reactor Without Control Rods From Normal Operation (Refer to appendix 15A).

2. Plant Capability to Shutdown the Reactor Without Control Rods From a Transient Incident (Refer to Appendix 15A and Section 15.8).

Even though the SLCS has a post LOCA function, the SLCS is not required to meet single failure criteria. However, the system must meet the following criteria in lieu of the single failure criteria (Reference 7.4.3-1)

a. The SLC System should be provided with standby AC power supplemented by the emergency diesel generators.

b. The SLC system should be seismically qualified in accordance with Regulatory Guide 1.29 and Appendix A to 10 CFR Part 100.

c. The SLC system should be incorporated into the plant's ASME Code ISI and IST Programs based upon the plant's code of record (10 CFR 5055a).

d. The SCL System should be incorporated into the plant's Maintenance Rule program consistent with 10 CFR 50.65.

e. The SLC System should meet 10 CFR 50.49 and Appendix A (GDC 4) to 10 CFR 50.

f. Non-redundant active components should have proven reliability based on historical information.

g. Components should remain functional for the appropriate environmental conditions.

7.4.1.2.3.2 Initiating Circuits

The SLCS is initiated in the main control room by turning a keylocking switch to either the "Start A" or the "Start B" position. The key is removable in the "STOP" position. Placing the keylocking switch in either the "Start A" or the "Start B" position initiates either pump A or pump B, respectively, in the injection mode configuration.

7.4.1.2.3.3 Logic and Sequencing

When the SLCS is initiated, both the explosive-operated valves fire. Simultaneously, the selected SLC pump is started and solution injection begins.

7.4.1.2.3.4 Bypasses and Interlocks

There are no bypasses. When the SLCS is initiated to inject the neutron absorber into the reactor, the outboard isolation valve of the RWCU system is automatically closed.

7.4.1.2.3.5 Redundancy and Diversity

Under special shutdown conditions, the SLCS is functionally redundant to the control rod drive system in achieving and maintaining the reactor subcritical. Therefore, the SLCS as a system by itself is not required to be redundant.

The SLCS provides, however, a means for shutting down the reactor by using a liquid neutron absorber in lieu of the control rod drive system.

The SLCS System provides a unique function of suppression pool pH control to prevent iodine re-evolution following a postulated design basis loss of coolant accident. The SLCS is not required to be redundant or diverse for the suppression pool pH control function.

7.4.1.2.3.6 Actuated Devices

When the SLCS is initiated to inject a liquid neutron absorber into the reactor, the following devices are actuated:

(1) Both explosive valves are fired;

(2) The selected injection pump is started, and

(3) The pressure sensing equipment indicates that the SLCS is pumping liquid into the reactor.

7.4.1.2.3.7 Separation

The SLCS is separated both physically and electrically from the control rod drive system. The SLCS instrument channels are separated in accordance with the requirements of IEEE 279-1971.

7.4.1.2.3.8 Testability

The instrumentation and control system of the SLCS is tested when the system test is performed as outlined in Section 14.2.

7.4.1.2.4 Environmental Considerations

The environmental considerations for the instrument and control portions of the SLCS are discussed in Section 3.11. The instrument and control portions of the SLCS are seismically qualified to remain functional following a Safe Shutdown Earthquake (SSE). Refer to Section 3.10a for seismic qualification aspects.

7.4.1.2.5 Operational Considerations

7.4.1.2.5.1 General Information

The control scheme for the SLCS is shown in Dwg. M1-C41-31, Sh. 1. The SLCS is manually initiated in the main control room by inserting the proper key in the keylocking switch and turning it to either the "START A" or “Start B” position. Upon SLCS manual initiation, the RWCU outboard isolation valve automatically closes to prevent removal of boron by the RWCU demineralizers. When the storage tank level sensors indicate that the storage tank is dry and injection is complete, the system may be manually turned off by turning the key lock switch to the STOP position.

7.4.1.2.5.2 Reactor Operator Information

The following items are located in the main control room for operator information:

Analog Indication

(1) Storage tank level

(2) Pump pressures

(3) Injection flow

Indicating Lamps

(1) Pump status

(2) Explosive valve continuity

(3) Injection valve status

(4) Maintenance valve status

Annunciators

The SLCS control room annunciators indicate:

(1) Injection valve not fully open.

(2) The loss of continuity of either explosive valve primers.

(3) Standby liquid storage tank high or low temperature.

(4) Standby liquid tank high and low level.

The following items are located locally at the equipment for operator utilization:

Analog Indication

(1) Storage tank level

(2) System pressure

(3) Storage tank temperature

Indicating Lamps

(1) Storage tank heaters A&B status

(2) Storage tank high and low level alarm status

7.4.1.2.5.3 Setpoints

The SLCS has setpoints for the various instruments as follows:

(1) The injection valve position switches are adjusted to indicate the valve is fully open.

(2) Loss of continuity activates the annunciator below the trickle current that is observed when both primers of an explosive valve are new.

(3) The high and low standby liquid temperature switch is set to activate the annunciator at temperatures of 110°F and 60°F, respectively.

(4) The high and low standby liquid storage tank level switch is set to activate the annunciator at levels which assure that the maximum and minimum volume/concentration limits of Figure 9.3-14 are met. A redundant storage tank level switch is also provided.

(5) The thermostatic controller is set to turn on the operating heater when the standby liquid temperature drops to 65°F and to turn off the heater at 75°F.

7.4.1.3 RHRS/Reactor Shutdown Cooling Mode - Instrumentation and Controls

7.4.1.3.1 System Identification

7.4.1.3.1.1 Function

The shutdown cooling mode of the RHR System (including the reactor vessel head spray) used during a normal reactor shutdown and cooldown is the non-safety portion of the RHRS. The shutdown cooling mode utilizes most of the safety classified portions of the RHRS.

The initial phase of a normal RCPB cooldown is accomplished by routing steam from the reactor vessel to the main condenser which serves as the heat sink.

The Reactor Shutdown Cooling System consists of a set of pumps, valves, heat exchangers, and instrumentation designed to provide decay heat removal capability for the core. The system specifically accomplishes the following:

(1) The reactor shutdown cooling system is capable of providing cooling for the reactor during shutdown operation after the vessel pressure is reduced below 98 psig.

(2) The system is capable of cooling the reactor water to a temperature at which reactor refueling and servicing can be accomplished.

(3) The system is capable of diverting part of the shutdown flow to a nozzle in the reactor vessel head to condense the steam generated from the hot walls of the vessel while it is being flooded.

The system can accomplish its design objectives by a preferred means by directly extracting reactor vessel water from the vessel via the recirculation loop B and routing it to a heat exchanger and back to the vessel, or by an alternate means by indirectly extracting the water via relief valve

discharge lines to the suppression pool and routing pool water to the heat exchanger and back to the vessel.

7.4.1.3.1.2 Classification

Electrical components for the Reactor Shutdown Cooling Mode of the Residual Heat Removal System are classified as Safety Class 2 and Seismic Category I.

7.4.1.3.2 Power Sources

This system utilizes standby power sources, since the RHRS has safety modes of operation (e.g., LPCI) connected to this equipment.

7.4.1.3.3 Equipment Design

7.4.1.3.3.1 General

The reactor water is cooled by taking suction from the “B” reactor recirculation loop; the water is pumped through the system heat exchanger and back to the reactor vessel via either recirculation loop. Part of the flow can be diverted to a nozzle in the vessel head to provide for head cooling. The function of head cooling is to condense steam generated from the hot walls of the vessel while it is being flooded, thereby keeping system pressure down. During the initial phase of shutdown cooling mode, only a portion of the RHR system heat exchanger capacity is required. This allows the remaining portion of the RHR system with its heat exchanger, associated pumps, and valving to be available for the LPCI mode. The LPCI mode portion of the system is shifted to the shutdown mode after the reactor is depressurized so the proper cooling rate may be achieved with the lower reactor water inlet temperature. If it is necessary to discharge a complete core load of reactor fuel to the fuel pool, a means is provided for making a physical intertie between the spent fuel pool cooling and clean-up system and the RHR heat exchangers. This increases the cooling capacity of the spent fuel pool cooling and clean-up system to handle the heat load for this situation.

7.4.1.3.3.2 Initiating Circuits

The reactor shutdown cooling mode is initiated by manual operator actions. There is no requirement for automatic control.

7.4.1.3.3.3 Logic and Sequencing

The following reactor shutdown cooling operating sequence is to be utilized:

(1) The RHRS valving should be aligned for shutdown cooling mode

(2) The recirculation loop suction valve is opened

(3) The RHRS Heat Exchangers are lined up for water-water heat transfer

7.4.1.3.3.4 Bypasses and Interlocks

To prevent opening the reactor shutdown cooling valves except under proper conditions, the interlocks are provided as shown in Table 7.4-2-1, 7.4-2-2, 7.4-2-3, and 7.4-2-4.

The two RHR pumps used for shutdown cooling are interlocked to trip if the reactor shutdown cooling valves and suction valves from the suppression pool are not properly positioned.

7.4.1.3.3.5 Redundancy and Diversity

The reactor shutdown cooling mode contains two loops. Either loop is sufficient to satisfy the cooling requirements for shutdown cooling. A diverse method of shutdown cooling is provided by the alternate shutdown cooling mode, which is actually an extension of the LPCI mode. To establish the alternate mode, the normal shutdown cooling loop is bypassed by manually switching to take suction water from the suppression pool and manually opening the ADS valves to allow reactor water to flow back to the suppression pool.

7.4.1.3.3.6 Actuated Devices

All valves in the shutdown cooling mode are equipped with remote manual switches in the main control room. Further discussion can be found in Subsection 7.3.1.1a relative to the general operation of the RHR system including its other modes of its operation.

7.4.1.3.3.7 Separation

Since various modes of operation of the RHR system perform safety-related functions (LPCI and containment cooling), any system equipment performing these functions satisfy the appropriate safety separation criteria (refer to Subsection 7.3.1.1a).

7.4.1.3.3.8 Testability

The reactor shutdown cooling system pumps (RHR) may be tested during normal plant operation. All motor operated valves in the system may be tested during normal plant operation from the remote switches in the main control room.

7.4.1.3.4 Environmental Considerations

The only reactor shutdown cooling control component located inside the drywell that must remain functional in the environment is the control mechanism for the inboard isolation shutdown cooling suction valve. The environmental capabilities of this valve are discussed in Subsection 7.3.1.1a.2.

The control and instrumentation equipment located outside the drywell is selected in consideration of the normal and accident environments in which it must operate.

RHR equipment is seismically qualified and environmentally classified as discussed in Sections 3.2, 3.10 and 3.11.

7.4.1.3.5 Operational Considerations

7.4.1.3.5.1 General Information

All controls for the reactor shutdown cooling mode are located in the main control room.

7.4.1.3.5.2 Reactor Operator Information

Refer to Subsection 7.3.1.1a for reactor operator information associated with the RHRS in general.

7.4.1.3.5.3 Setpoints

The safety-related setpoints involved in the operation of the shutdown cooling mode of the RHRS are those associated with the Reactor Steam Dome Pressure – High and Reactor Vessel Water Level – Low, Level 3 functions described in the Technical Requirements Manual.

7.4.1.4 Reactor Shutdown from Outside the Control Room (Remote Shutdown)

7.4.1.4.1 Description

The Susquehanna SES is designed with a main control room that is common to Unit 1 and 2. If this main control room becomes uninhabitable and must be evacuated, a remote shutdown panel is provided for each unit.

In the event the main control room becomes uninhabitable and must be evacuated due to a fire, as evaluated in the FPRR Sections 3.3 and 6.2.25 an Alternate Control Structure HVAC Control Panel is provided. Control Structure HVAC is a common system and this panel would be available for Unit 1 and 2.

The remote shutdown panels are equipped with sufficient control and monitoring devices to bring the reactor to a hot shutdown condition, and subsequently to cold shutdown condition.

The remote shutdown panel for each unit is located within a locked room in the reactor building of each unit. Access to this room is controlled by a locked door with a keycard. The keycards are under administrative control. The Alternate Control Structure HVAC Control Panel is located in the Control Structure. Access to the control structure is controlled by a locked door with a keycard. The keycards are under administrative control.

Adequate environmental control capability is provided at the location of these panels. Refer to Subsection 9.4.2 for HVAC systems provided in the reactor building and Subsection 9.4.1 for HVAC systems provided in the control structure.

The following systems are required for safe remote shutdown:

a) RCIC system to maintain reactor water level.

b) Relief valves and nuclear boiler system to reduce and monitor reactor vessel pressure, respectively.

c) RHR system to control suppression pool water temperature and for reactor water cooling mode.

d) RHR service water system to supply cooling water to the RHR heat exchanger.

e) Emergency service water system to supply cooling water to safety systems and the diesel generators.

f) Suppression pool system monitoring instrumentation.

Tables 7.4-3 and 7.4-4 are listings of control and indicating devices on the remote shutdown panels and the Alternate Control Structure HVAC Control Panel, respectively.
With exception of indication circuits which have no corresponding device located in the Control Room, all control and indicating devices on the panels are normally deenergized and must be connected to the active circuitry by transfer switches. This action bypasses the main control room circuits for control and indication, except for the suppression pool temperature indication, and generates an alarm in the control room as part of the Bypass Indication System (BIS) (see Section 7.5).

The average suppression pool temperature indication is provided at the RSP via the redundant Suppression Pool Temperature Monitoring System (SPOTMOS) equipment, located in the control room and described in Section 7.6.1b.1.2. The SPOTMOS equipment provides a continuous and isolated signal to the RSP indicators.

7.4.1.4.2 Design Criteria

The design basis for the remote shutdown panel is in accordance with 10CFR50, Appendix A, Criterion 19 of the General Design Criteria.

7.4.1.4.2.1 Postulated Conditions During the Evacuation of the Main Control Room

a) The reactor is operating at or below the design power level.

b) The plant is not experiencing a major transient condition or a recovery from an abnormal condition.

c) Design basis accidents, such as a LOCA, do not occur during the period when the control room is uninhabitable.

d) Control room evacuation was initiated by an undefined cause. For example, an environmental condition intolerable to humans forces the operators to leave the control structure.

e) The design assumes that no disaster resulting from a natural phenomenon has occurred. The control room is not physically destroyed. However, it remains uninhabitable for an extended period of time.

f) Total loss of offsite power has been considered in the design.

g) Loss of safety system redundancy for the plant does not occur as a result of the event requiring control room evacuation.

h) The cause of the evacuation is of such nature that the control room operating personnel will have sufficient time to manually scram each reactor before leaving the control room. As a backup procedure, manual trip actuation of the circuit breakers for the reactor protection system (RPS) logic will allow the operator to achieve initial reactor scram from outside the main control room.

i) The event causing main control room evacuation will not prevent access to the remote shutdown panel. If the event causing main control room evacuation is a fire, access to the Alternate Control Structure HVAC Control Panel will not be prevented.

7.4.1.4.2.2 Design Considerations

a) The design of the remote shutdown panel and the Alternate Control Structure HVAC Control Panel is in accordance with seismic qualification requirements for Seismic Category I.

b) The divisionalization and separation of safety-related systems and their components is not violated by the design of the panels.

c) The remote shutdown or Alternate CSHVAC control panel design does not compromise the single failure criteria of controls in the main control room. The control devices and instruments on the remote shutdown panel itself are not designed to meet the single failure criteria.

d) Testability of the readout instruments is provided by test switches on the front of the panel.

e) Upon actuation, the transfer switches will generate a signal to actuate valves in a direction that will isolate piping that could bypass significant volumes of water away from systems required for remote shutdown.

The valves that are actuated to the "safe-condition" are listed in Table 7.4-3.

f) The design provides redundant safety grade capability to achieve and maintain hot shutdown and/or attaining subsequent cold shutdown through the use of suitable procedures from a location(s) remote from the control room, assuming no fire damage to any required systems and equipment and assuming no accident has occurred. Credit is taken for manual actuation (exclusive of continuous control) of systems from locations that are reasonably accessible from the Remote Shutdown Panel. Credit is not taken for manual actions involving jumpering, rewiring or disconnecting circuits.

g) The design is such that the manual transfer of control to the remote location(s) does not disable any, automatic actuation of ESF functions while the plant is attaining or maintained in hot shutdown, other than where ESF features are manually placed in service to achieve or maintain hot shutdown. The design may disable automatic LPCI actuation in this manner only when necessary in order to enable control of the RHR system from the remote location and while operating this system to effect cold shutdown from hot shutdown.

h) The design provides, as a minimum, non-redundant safety grade systems necessary to achieve and maintain hot shutdown and/or cold shutdown from either the control room or from a remote location(s) assuming a postulated fire in any fire area, including the control room or the Remote Shutdown Panel. Credit is taken for manual actuation (exclusive of continuous control) of systems from locations that are reasonably accessible from the control room or the Remote Shutdown Panel, as applicable. Credit is not taken for manual actions involving jumpering, rewiring or disconnecting circuits. The design is such that in the event of fire damage in any fire area, systems could be repaired or made operable within 72 hours if required for cold shutdown.

i) Communication from the Remote Shutdown Panel, is available in various forms from the Remote Shutdown Panel area to the areas requiring local control, including:

1. an intraplant public address, 5-channels page/talk handset intercom system,
2. an intraplant maintenance/test jack telephone system, and
3. portable communication systems (walkie talkies).

These systems will support the control of any of the aforementioned redundant mechanisms.

7.4.1.4.2.3 Remote Shutdown Functional Capabilities

The capabilities of the remote shutdown control panel are outlined in the following discussion. See Subsections 9.4.1 and 9.2.12 for the capabilities of the Alternate CSHVAC Control Panel.

Hot Shutdown

After reactor scram has been manually initiated, transfer switches on the remote shutdown panel allow the operator to transfer control from the control room to the remote instrumentation and controls for the systems described in Subsection 7.4.1.4.1.

Main steamline isolation is likely to occur; hence, reactor pressure will be relieved to the suppression pool through the RPV relief valves. Control of three pressure relief valves is provided on the remote shutdown panel. Reactor pressure can be monitored.

The operation of the RCIC system can be manually initiated, controlled, and monitored to maintain water level in the reactor pressure vessel. Reactor vessel level can be monitored. Condensate Storage Tank display information is not provided on the Remote Shutdown Panel. A 135,000 reserve capacity is maintained in the Condensate Storage Tank for HPCI and RCIC use only. This reserve will allow over three hours of RCIC operation at the design flow rate of 600 GPM. Three hours of RCIC operation is adequate to cool the reactor from the operating temperature of 546°F to the RHR shutdown cooling initiation temperature of 338°F assuming a cooldown rate of 100°F/hr.

Condensate Storage Tank level indication is provided locally at the tank, should the operator desire this information.

The Residual Heat Removal (RHR) system can be used in a suppression pool cooling mode to control temperature of the suppression pool water.

Monitoring and control of the RHR service water system and emergency service water system is provided for cooling water to RHR heat exchangers, RHR and RCIC room coolers, and diesel generators.

Controls for the containment (drywell) instrument gas supply suction and injection valve make it possible to provide operating gas pressure to the RPV relief valves.

Monitoring of containment pressure/temperature, suppression pool level/temperature and suppression chamber temperature is provided by indicators.

Cold Shutdown

Manual operation of the RPV relief valves will cool the reactor and reduce its pressure at a controlled rate until RCIC (and/or HPCI) systems discontinue operation.

Reactor pressure reduction below 98 psig dome pressure allows operation of the residual heat removal (RHR) system to operate in the reactor shutdown cooling mode. The RHR system is connected to the reactor vessel via the reactor recirculation system and cooling is provided with RHR heat exchangers to bring the reactor to a cold, low pressure condition. The Remote Shutdown Panel provides control for the "B" RHR pump on Unit 1, and the "A" RHR pump on Unit 2. RHR flow indication (0-30,000 GPM) is provided on the remote shutdown panel for the appropriate RHR loop. RHR suction for shutdown cooling is taken from the "B" reactor recirculation loop on both units. Control for the "B" reactor recirculation pump suction valve (F023B) is provided on the remote shutdown panel on both units. This valve will be closed prior to initiating RHR shutdown cooling. Closing this valve will trip the "B" recirculation pump, thereby protecting both the applicable RHR pump, and the "B" recirculation pump from cavitation. The "A" reactor recirculation pump suction valve (F023A) will be closed from Motor Control Center 2B237043 prior to initiating A loop RHR shutdown cooling at unit two remote shutdown panel. Closing this valve will prevent shutdown cooling flow diversion around the reactor core. All remaining recirculation suction and discharge valves will remain in an "as-is" position throughout the remote shutdown operation.

7.4.1.4.3 Consideration for Operation of the Remote Shutdown Panel

a) Scram each unit's reactor.

b) Operate transfer switches to shift operations from the main control room to the remote shutdown panel.

c) Open containment instrument gas supply valves.

d) Start manual depressurization of the reactor pressure vessel by operating the pressure relief valves.

e) If automatic initiation has not occurred, start RCIC system, to maintain reactor water level.

f) Initiate RHR system in the suppression pool cooling mode.

Place RHR service water and emergency service water in operation.

g) Reactor water level will rise as a result of RCIC system flow.

Manually control the system flow rate to maintain the required level.

h) Observe reactor water level, reactor pressure, and suppression pool temperatures.

i) Actuate two relief valves to continue reactor vessel depressurization, while observing suppression pool temperature.

j) Reduce reactor pressure to 98 psig.

k) The RCIC system will discontinue operation.

l) Place the RHR system in the reactor shutdown cooling mode. If desired, flush the system for several minutes. Then reroute the flow through the RHR heat exchanger and back into the vessel. Continue cooldown until the reactor is in the cold, low pressure condition.

m) Hold the required reactor water level with the RHR system.

7.4.1.4.4 Consideration for Operation of the Alternate Control Structure HVAC Panel

a) Operate transfer switches to shift operation from the main control room to the Alternate Control Panel.

b) Start the 'A' loop of control structure chilled water system.
c) Start the 'A' train of the SGTS equipment room ventilating exhaust system, control structure HVAC unit, computer room HVAC unit, and the battery room exhaust system.

7.4.2 Analysis

7.4.2.1 Reactor Core Isolation Cooling (RCIC) System - Instrumentation and Control

7.4.2.1.1 General Functional Requirements Conformance

For events other than pipe breaks, such as RCPB isolations, the RCIC system has a makeup capacity sufficient to prevent the reactor vessel water level decreasing to the level where the core is uncovered. All components necessary for initiating the RCIC System when it is aligned to the control room are capable of start-up independent of auxiliary AC power, plant service air, and external cooling water systems.

To provide a high degree of assurance that the RCIC system shall operate when necessary and in time to provide adequate inventory makeup, the power supply for the system is taken from energy

sources of high reliability and which are immediately available. Evaluation of instrumentation reliability for the RCIC system shows that no failure of a single initiating sensor either prevents or falsely starts the system.

A design flow functional test of the RCIC system can be performed during plant operation by taking suction from the demineralized water in the condensate storage tank and discharging through the full flow test return line back to the condensate storage tank. During the test, the discharge valve to the reactor vessel remains closed and reactor operation is not disturbed. Control system design provides automatic return from the test mode to the operating mode if system initiation is required during testing except for the conditions described in Subsection 7.4.1.1.3.1.

Chapter 15 and Appendix 15A examine the system-level aspects of this system in plant operation and consider its function under various plant transient events.

7.4.2.1.2 Specific Regulatory Requirements Conformance

7.4.2.1.2.1 NRC Regulatory Guides Conformance

7.4.2.1.2.1.1 Regulatory Guide 1.6

Although it is not required that RCIC alone meet single failure criterion, redundant power sources are required for inboard and outboard RCIC isolation valves. These power sources are consistent with the guidelines of Regulatory Guide 1.6 as described in Subsections 8.1.6.1 and 8.3.2.2.

7.4.2.1.2.1.2 Regulatory Guide 1.11

All RCIC instrument lines penetrating or connected to containment meet the requirements of regulatory position C.1.

7.4.2.1.2.1.3 Regulatory Guide 1.22

RCIC is fully testable from initiating sensors to actuated devices during full power operation.

7.4.2.1.2.1.4 Regulatory Guide 1.29

The safety-related portion of RCIC instrumentation and control is classified as Seismic Category I and is qualified to remain functional following an SSE.

7.4.2.1.2.1.5 Regulatory Guide 1.30

Conformance to Regulatory Guide 1.30 is discussed in Subsection 7.1.2.

7.4.2.1.2.1.6 Regulatory Guide 1.32

Conformance to Regulatory Guide 1.32 as discussed in Section 8.1 is applicable to RCIC safety-related control instrumentation.

7.4.2.1.2.1.7 Regulatory Guide 1.47

Regulatory Guide 1.47 Positions C.1, C.2, and C.3

Automatic indication is provided in the control room to inform the operator that the system is inoperable. Annunciation RCIC out of service is provided to indicate a system or part of a system is not operable. Bypassing is not allowed in the trip logic or actuator logic. Bypasses of certain infrequently used pieces of equipment, such as manual locked open valves, are not automatically annunciated in the main control room; however, capability for manual activation of each system level bypass indicator is provided in the main control room for equipment that has infrequently used bypasses. An administratively controlled switch may be used for this manual activation. Further examples of automatic indication of inoperability are listed below:

(1) If any circuit breaker is racked out, indication is provided in the main control room.

(2) All motor control center control circuits are individually monitored. If control voltage is lost as a result of tripping of a motor starter feeder breaker or removal of a fuse in the control circuit, indication is provided in the main control room.

(3) Instruments which form part of a one-out-of-two twice logic can be removed from service for calibration. Removal of the instrument from service is indicated in the control room as a single instrument channel trip.

(4) The RCIC System contains a control switch with "Test Mode" capability which provides continuous control room indication that "Test Mode" has been selected.

Regulatory Guide 1.47 Position C.4

System level out of service annunciator may be administratively activated by the control room operator by activating a control switch.

All the annunciators can be tested by depressing the annunciator test switches on the control room benchboards.

Individual indicators are arranged together on the control room panel to indicate what function of the system is out of service, bypassed, or otherwise inoperable. All bypass and inoperability indicators both at a system level and component level are grouped only with items that will prevent a system from operating if needed. Indication of pressures, temperatures, and other system variables that are a result of system operation are not included with the bypass and inoperability indicators.

As a result of design, preoperational testing and startup testing, no erroneous bypass indication is anticipated.

These indication provisions serve to supplement administrative controls and aid the operator in assessing the availability of component and system level protective actions This indication does not perform a safety function.

All circuits are electrically independent of the station safety systems to prevent the possibility of adverse effects.

Each indicator which can be periodically tested is provided with dual lamps. Also see conformance to Regulatory Position C.4 above.

7.4.2.1.2.1.8 Regulatory Guide 1.53

RCIC meets the single-failure criterion on a network basis in conjunction with HPCI. It is not necessary for RCIC alone to meet the single-failure criterion in itself since its function is duplicated or backed up by other systems. Redundant sensors are discussed in Subsection 7.4.2.1.2.3.1.6.

7.4.2.1.2.1.9 Regulatory Guide 1.62

RCIC may be automatically as well as manually initiated inside the main control room as well as at the remote shutdown facility outside the main control room.

7.4.2.1.2.1.10 Regulatory Guide 1.63

See Subsection 7.1.2.6.13.

7.4.2.1.2.1.11 Regulatory Guide 1.75

Conformance to Regulatory Guide 1.75 is discussed in Subsection 7.1.2.6.17.

7.4.2.1.2.1.12 Regulatory Guide 1.89

Conformance to Regulatory Guide 1.89 is discussed in Section 3.11. See the Susquehanna SES Environmental Qualification Program for Class 1E Equipment.

7.4.2.1.2.2 NRC Regulations Conformance - 10CFR50 Appendix A Requirements

7.4.2.1.2.2.1 General Design Criterion 13

The reactor vessel water level, RCIC pump discharge pressure, and RCIC flow rate are monitored and displayed in the main control room.

7.4.2.1.2.2.2 General Design Criterion 20

The RCIC system constantly monitors the water level in the reactor vessel and is automatically initiated when the level drops below the pre-established setpoint.

7.4.2.1.2.2.3 General Design Criterion 21

RCIC is fully testable from sensor to actuated device during normal operation. Reliability of operation is enhanced through the use of high functional reliability components and thoroughly engineered design.

7.4.2.1.2.2.4 General Design Criterion 22

RCIC initiation signal is supplied by redundant, independent sensors in a one-out-of-two twice logic.

7.4.2.1.2.2.5 General Design Criterion 29

Thorough design and selection of highly reliable components assure an extremely high probability that RCIC will accomplish its intended safety function.

7.4.2.1.2.2.6 General Design Criterion 34

Conformance to General Design Criterion 34 is discussed is Subsection 7.4.1.1.1.1.(3).

7.4.2.1.2.2.7 General Design Criterion 37

RCIC is not part of the ECCS.

7.4.2.1.2.3 Conformance to Industry Codes and Standards

7.4.2.1.2.3.1 IEEE 279-1971

7.4.2.1.2.3.1.1 General Functional Requirement (IEEE 279-1971, Paragraph 4.1)

RCIC is automatically initiated by reactor low water level measurements.

7.4.2.1.2.3.1.2 Single-Failure Criterion (IEEE 279-1971, Paragraph 4.2)

The RCIC system is not required to meet the single-failure criterion. The control logic circuits for the RCIC initiation and control are housed in a single relay cabinet and the power supply for the control logic and other RCIC equipment is from a single DC power source.

The RCIC initiation sensors wiring and relay logic cabinet do, however, meet the single-failure criterion. Physical separation of instrument lines is provided so that no single instrument rack destruction or single instrument line (pipe) failure can prevent RCIC initiation. Wiring separation between divisions also provides tolerance to single raceway destruction (including shorts, opens, and grounds) in the accident detection portion of the control logic. The single-failure criterion is not applied to logic relay cabinet or to other equipment required to function for RCIC operation.

7.4.2.1.2.3.1.3 Quality of Components and Modules

The components of the RCIC instrumentation and control are of the same high quality as the ECCS systems. The safety-related portion of RCIC control and instrumentation components and modules is seismically qualified to remain functional following a Safe Shutdown Earthquake (SSE).

7.4.2.1.2.3.1.4 Equipment Qualification (IEEE 279-1971, Paragraph 4.4)

Refer to Sections 3.10 and 3.11

7.4.2.1.2.3.1.5 Channel Integrity (IEEE 279-1971, Paragraph 4.5)

The RCIC system instrument initiation channels satisfy the channel integrity objective.

7.4.2.1.2.3.1.6 Channel Independence (IEEE 279-1971, Paragraph 4.6)

Channel independence for initiation sensors is provided by electrical and mechanical separation. The A and C sensors for reactor vessel level, for instance, are located on one local instrument panel identified as Division 1 equipment and the B and D sensors are located on a second instrument panel widely separated from the first and identified as Division 2 equipment. The A and C sensors have a common pair of process taps which are widely separated from the corresponding taps for the B and D sensors.

Disabling of one or both sensors in one location does not disable the control for RCIC initiation.

7.4.2.1.2.3.1.7 Control and Protection Interaction (IEEE 279-1971, Paragraph 4.7)

The RCIC system has no interaction with plant control systems. Annunciator circuits using contacts of sensors and logic relays cannot impair the operability of the RCIC system control because of electrical isolation.

7.4.2.1.2.3.1.8 Derivation of System Inputs (IEEE 279 -1971, Paragraph 4.8)

The RCIC system uses a direct measure of the need for coolant inventory makeup, e.g., reactor vessel low water level.

7.4.2.1.2.3.1.9 Capability for Sensor Checks (IEEE 279-1971, Paragraph 4.9)

All sensors are installed with calibration taps and instrument valves to permit testing during normal plant operation or during shutdown.

The reactor vessel level switches can be checked for operability by closing the low side instrument valve and bleeding off a small amount of water through the low side bleed valves which are provided for venting the instruments), while observing the scale reading and channel trip indication in the main control room, and then reopening the instrument valve.

7.4.2.1.2.3.1.10 Capability for Test and Calibration (IEEE 279-1971, Paragraph 4.10)

The RCIC control system is capable of being completely tested during normal plant operation to verify that each element of the system, whether active or passive, is capable of performing its intended function. As part of this test, the turbine and pump are started in the test mode with the pump discharging to the condensate storage tank. In this test mode all major components except the isolation valves are tested. Valve operability tests complete the major component testing. Sensors are exercised by applying test pressure.

7.4.2.1.2.3.1.11 Channel Bypass or Removal from Operation (IEEE 279-1971, Paragraph 4.11)

Calibration of a sensor which introduces a single instrument channel trip will not cause a protective function without the coincident trip of a second channel. There are no instrument channel bypasses. Removal of a sensor from operation during calibration does not prevent the redundant instrument channel from functioning. Removal of an instrument channel from service during calibration will be brief.

7.4.2.1.2.3.1.12 Operating Bypasses (IEEE 279-1971, Paragraph 4.12)

RCIC has no operating bypasses.

7.4.2.1.2.3.1.13 Indication of Bypasses (IEEE 279-1971, Paragraph 4.1.3)

Automatic indication of bypasses is provided by individual annunciators to indicate what function of the system is out of service, bypassed or otherwise inoperative. In addition, each of the indicated bypasses also activates a "system inoperative" or a "system out of service" annunciator. Manual "system inoperative" or "system out of service" switches are provided for operator use and may be used for items that are only under supervisory control.

There are several means by which the RCIC system could be deliberately rendered inoperative by plant operating personnel:

(1) Manually opening feeder breakers to the motor starter for valves, pumps, etc., that are required to function during RCIC operation. Manually opening a breaker for a specific motor will deenergize the control power to the motor starter and annunciate loss of power alarm in the main control room. Tagging procedures may also be used to indicate

out-of-service equipment and are considered an adequate indication of equipment status. Manual opening of breakers is a requirement for safe maintenance of equipment.

(2) Manually opening DC control power feeder breakers. Tripping or opening a DC control power feeder breaker will give a loss-of-power alarm.

(3) Manually shutting off instrument line valves in various specific combination.

(4) Placing of the flow controller from "Auto" to "Manual" operation in the main control room or adjusting "Auto" setpoint in the incorrect position. Manual operation of the flow controller setpoint in the incorrect position. Manual operation of the flow controller is provided to allow operator intervention should the auto portion of the controller fail. The availability of an auto setpoint control on the controller is desirable so that the operator can regulate the flow to maintain water level rather than cycling the turbine between the auto trip and start level setpoints and without going to the "Manual" mode of operation. The controller is in the main control room and therefore under the direct supervision of the control room operator.

All of these items are under supervisory control and are not automatically defeated by RCIC initiation signals.

The following is a list of automatic bypasses which can render the RCIC system inoperative:

(1) RCIC steamline isolation signal.

(2) RCIC turbine trip caused by:

a. RCIC isolation signal.

b. RCIC pump suction pressure low.

c. RCIC turbine exhaust pressure high.

d. RCIC turbine overspeed.

These functions are discussed in Subsection 7.4.1.1.3.2.

7.4.2.1.2.3.1.14 Access to Means for Bypassing (IEEE 279-1971, Paragraph 4.14)

Access to motor control centers and instrument valves is controlled as discussed in Subsection 7.4.2.1.2.3.1.13. Access to other means of bypassing is located in the relay rooms and therefore under the administrative control of the operators.

7.4.2.1.2.3.1.15 Multiple Setpoints (IEEE 279-1971, Paragraph 4.15)

This is not applicable because all setpoints are fixed.

7.4.2.1.2.3.1.16 Completion of Protective Action Once it is Initiated (IEEE 279-1971, Paragraph 4.16)

The final control elements for the RCIC system are essentially bistable, i.e., motor-operated valves stay open or closed once they have reached their desired position, even though their starter may drop out. In the case of pump starters, the auto initiation signal is electrically sealed-in.

Thus, once protective action is initiated (i.e., flow established), it must go to completion until terminated by deliberate operator action or automatically stopped on high vessel water level or system malfunction trip signals.

7.4.2.1.2.3.1.17 Manual Actuation (IEEE 279-1971, Paragraph 4.17)

Each piece of RCIC actuation equipment required to operate (pumps and valves) is capable of manual initiation from the main control room.

Failure of logic circuitry to initiate the RCIC system will not affect the manual control of equipment.

However, failures of active components or control circuits which produce a turbine trip may disable the manual actuation of the RCIC system. Failures of this type are continuously monitored by alarms.

7.4.2.1.2.3.1.18 Access to Setpoint Adjustment (IEEE 279-1971, Paragraph 4.18)

Setpoint adjustments for the RCIC system sensors are integral with the sensors on the local instrument racks and cannot be changed without the use of tools to remove covers over these adjustments. Control relay cabinets are capable of being locked to prevent unauthorized actuation.

7.4.2.1.2.3.1.19 Identification of Protective Actions (IEEE 279-1971, Paragraph 4.19)

Protective actions are directly indicated and identified by annunciator operation or action of the sensor relay which has an identification tag and a clear glass window front which permits convenient visible verification of the relay position. The combination of annunciation and relay observation is considered to fulfill the requirements of this criterion.

7.4.2.1.2.3.1.20 Information Readout (IEEE 279-1971, Paragraph 4.20)

The RCIC control system is designed to provide the operator with accurate and timely information pertinent to its status. It does not introduce signals into other systems that could cause anomalous indications confusing to the operator. Periodic testing is provided for verifying the operability of the RCIC components and, by proper selection of test periods to be compatible with the historically established reliability of the components tested, complete and timely indications are made available. Sufficient information is provided on a continuous basis so that the operator can have a high degree of confidence that the RCIC function is available and/or operating properly.

7.4.2.1.2.3.1.21 System Repair (IEEE 279-1971, Paragraph 4.21)

The RCIC control system is designed to permit repair or replacement of components. All devices in the system are designed for a 40-year lifetime under the imposed duty cycles. Since this duty cycle is composed mainly of periodic testing rather than operation, lifetime is more a matter of "shelf life" than active life.

Recognition and location of a failed component will be accomplished during periodic testing. The simplicity of the logic will make the detection and location relatively easy, and components are mounted in such a way that they can be conveniently replaced in a short time. For example, estimated replacement time for the type relay used is less than 30 minutes. Sensors which are connected to the instrument piping cannot be changed so readily, but they are required to be connected with separable screwed or bolted fittings and could be changed in less than 1 hour, including electrical connection replacement.

7.4.2.1.2.3.1.22 Identification (IEEE 279-1971, Paragraph 4.22)

All controls and instruments are located in one section of the main control room panel and clearly identified by nameplates. Relays and relay panels are identified by nameplates.

7.4.2.1.2.3.2 IEEE 308-1974

Compliance to IEEE 308-1974 is described in Section 8.3.

7.4.2.1.2.3.3 IEEE 323-1971

Specific conformance to requirements of IEEE 323 is covered in Subsection 7.1.2.5 and Section 3.11.

7.4.2.1.2.3.4 IEEE 338-1971

The RCIC system is fully testable during normal operation. The discharge valve to the feedwater line remains closed during the test, and reactor operation remains undisturbed, thus meeting requirements of IEEE STD 338-1971. Refer to Subsections 7.4.2.1.2.3.1.9 and 7.4.2.1.2.3.1.10 for further discussion.

7.4.2.1.2.3.5 IEEE 344-1971

The conformance to the requirements of IEEE 344-1971 is detailed in Section 3.10a.

7.4.2.2 Standby Liquid Control System (SLCS) Instrumentation and Controls

7.4.2.2.1 General Functional Requirements Conformance

Redundant positive displacement pumps, explosive valves, and control circuits for the standby liquid control system components have been provided as described in Subsection 7.4.1.2. A single manual switch initiates either pump A or pump B and both explosive valves. This constitutes all of the active equipment required for injection of the sodium pentaborate solution. Continuity relays provide monitoring of the explosive valves, and indicator lights provide indication on the Reactor Core Cooling Benchboard of system status. Testability is described in Section 14.2. The redundant pumps and explosive valves and their control circuits are powered from different essential power sources within the same division as described in Section 7.4.1.2.2.

Chapter 15 and Appendix 15A examine the system-level aspects of the subject system under applicable plant events.

7.4.2.2.2 Specific Regulatory Requirements Conformance

7.4.2.2.2.1 NRC Regulatory Guides Conformance

7.4.2.2.2.1.1 Regulatory Guide 1.6

Since it is not necessary for SLCS to meet the single-failure criterion even for suppression pool pH control post DBA LOCA see Section 7.4.1.2.3, redundant power sources are not required. SLCS equipments are connectable to divisional essential power.

7.4.2.2.2.1.2 Regulatory Guide 1.11

No SLCS instrument lines penetrate the containment.

7.4.2.2.2.1.3 Regulatory Guide 1.22

SLCS is capable of testing from initiation to actuated devices during normal operation. In the test mode, demineralized water is circulated in the SLCS loops rather than sodium pentaborate. The explosive valves may be tested when plant is shut down. Otherwise, continuity in the explosive valve initiation circuits is continuously monitored during plant operation.

7.4.2.2.2.1.4 Regulatory Guide 1.29

The control instrumentation of SLCS is classified as Seismic Category I and is qualified to remain functional following a SSE.

7.4.2.2.2.1.5 Regulatory Guide 1.30

Conformance to Regulatory Guide 1.30 is discussed in Subsection 7.1.2.6.

7.4.2.2.2.1.6 Regulatory Guide 1.32

Conformance to IEEE 308 as discussed in Section 8.3 is applicable to SLCS control instrumentation.

7.4.2.2.2.1.7 Regulatory Guide 1.47

The continuity of the explosive valve circuit is continuously monitored and is annunciated in the control room. The level and temperature of the sodium pentaborate tank are monitored with the high and low levels and high and low temperature conditions annunciated in the control room. The removal of all other equipments for servicing may be manually annunciated and is administratively controlled.

7.4.2.2.2.1.8 Regulatory Guide 1.53

SLCS serves as a back-up for the control rod system when an insufficient number of control rods can be remote manually inserted from full power setting. The system is also required to control suppression pool pH post DBA-LOCA. It is not necessary for SLCS to meet the single-failure criterion. The pumps and pump motors and the explosive valves are redundant so that no single failure in these components will cause or prevent initiation of SLCS. The system must also meet the requirements of Section 7.4.1.2.3.

7.4.2.2.2.1.9 Regulatory Guide 1.62

SLCS is initiated manually from the main control room.

7.4.2.2.2.1.10 Regulatory Guide 1.63

See Subsection 7.1.2.6.13.

7.4.2.2.2.1.11 Regulatory Guide 1.89

Conformance to Regulatory Guide 1.89 is discussed in Section 3.11. See the Susquehanna SES Environmental Qualification Program for Class IE Equipment. Additional requirements are discussed in Section 7.4.1.2.3.

7.4.2.2.2.2 NRC Regulations Conformance - 10CFR150 Appendix A Requirements

7.4.2.2.2.2.1 General Design Criterion 13

The sodium pentaborate tank temperature and level and explosive valves control circuit continuity are monitored and annunciated. The sodium pentaborate solution discharge flow rate is monitored and displayed in the main control room.

7.4.2.2.2.2.2 General Design Criterion 29

SLCS maintains the reactor subcritical by introducing poison into the reactor in the event the control rods fail to achieve subcriticality in the reactor.

7.4.2.2.2.3 Conformance to Industry Codes and Standards

7.4.2.2.2.3.1 IEEE 279-1971

7.4.2.2.2.3.1.1 General Functional Requirement (IEEE 279-1971, Paragraph 4.1)

Display instrumentations in the main control room provide the operator with information on reactor vessel water level, pressure, neutron flux level, control rod position, and scram valve status. Based on this information, the operator decides whether or not to initiate the manually operated SLCS.

7.4.2.2.2.3.1.2 Single Failure Criterion (IEEE 279 -1971, Paragraph 4.2)

SLCS serves as backup to the control rod scram in controlling reactivity. Additionally, the SLCS is required to control suppression pool pH post LOCA. It is not necessary for SLCS to meet the single failure criterion. However, the pumps and the explosive valves are redundant so that no single failure in these components will cause or prevent initiation of SLCS.

See Section 7.4.1.2.3 for SLCS requirements.

7.4.2.2.2.3.1.3 Quality of Components and Modules (IEEE 279-1971, Paragraph 4.3)

The control instrumentations of SLCS are qualified Class 1E in accordance with IEEE 323-1971.

7.4.2.2.2.3.1.4 Equipment Qualification (IEEE 279-1971, Paragraph 4.4)

No components of SLCS are required to operate in the drywell environment. A maintenance valve is the only component located inside the drywell and it is normally locked open. Other SLCS equipments are located in the reactor building or containment and are capable of operation following an SSE.

7.4.2.2.2.3.1.5 Channel Integrity (IEEE 279-1971, Paragraph 4.5)

One of SLC System's design functions is to prevent re-evolution of iodine from the suppression pool in the event of a Design Basis Accident (DBA-LOCA). SLCS must maintain necessary functional capability under extremes of conditions relating to environment, energy supply, malfunctions, and accidents. See Section 7.4.1.2.3 for specific requirements. It is designed to remain functional following an SSE.

7.4.2.2.2.3.1.6 Channel Independence (IEEE 279-1971, Paragraph 4.6)

SLCS serves as backup to control rod scram system for shutting down the reactor. SLCS is kept independent of the control rod scram system. SLCS provides the unique function of controlling suppression pool pH post DBA-LOCA. Channel independence is not a concern for this function.

7.4.2.2.2.3.1.7 Control and Protection Interaction (IEEE 279-1971, Paragraph 4.7)

SLCS has no interaction with plant control systems. It has no function during normal plant operation and it is completely independent of control systems and other safety systems.

7.4.2.2.2.3.1.8 Derivation of System Inputs (IEEE 279-1971, Paragraph 4.8)

Since SLCS is a manually initiated system, inputs are derived directly from the operator.

Display instrumentations in the main control room provide the operator with information on reactor vessel water level, pressure, neutron flux level, control rod position and scram valve status. Based on this information, the operator decides whether or not to initiate SLCS.

7.4.2.2.2.3.1.9 Capability of Sensor Checks (IEEE 279-1971, Paragraph 4.9)

The operational availability is checked for by the operator. The sensor checks are made by operator observation of analog indications, indicating lamps, annunciators and status lights located in the control room and locally at the equipment. Refer to Subsection 7.4.1.2.5.2 for further clarification.

7.4.2.2.2.3.1.10 Capability for Test and Calibration (IEEE 279-1971, Paragraph 4.10)

The explosive valves may be tested during plant shutdown. The explosive valve control circuits are continuously monitored and annunciated in the control room. The remainder of the SLCS may be tested during normal plant operation to verify each element passive or active is capable of performing its intended function. In the test mode, demineralized water instead of sodium pentaborate solution is circulated from and back to the test tank.

7.4.2.2.2.3.1.11 Channel Bypass or Removal from Operation (IEEE 279-1971, Paragraph 4.11)

The pumps and pump motors are redundant, so that one pump may be removed from service during normal plant operation.

7.4.2.2.2.3.1.12 Operating Bypass (IEEE 279-1971, Paragraph 4.12)

SLCS has no function during normal plant operation.

7.4.2.2.2.3.1.13 Indication of Bypass (IEEE 279-1971, Paragraph 4.13)

Removal of components from service may be manually annunciated in the main control room.

7.4.2.2.2.3.1.14 Access to Means for Bypass (IEEE 279-1971, Paragraph 4.14)

Removal of components from service during normal plant operation is under administrative control.

7.4.2.2.2.3.1.15 Multiple Setpoints (IEEE 279-1971, Paragraph 4.15)

The operation of SLCS is not dependent on or affected by setpoints.

7.4.2.2.2.3.1.16 Completion of Protective Action Once it is Initiated (IEEE 279-1971, Paragraph 4.16)

The explosive valves remain open once fired and the pump motor operation once initiated will not stop unless terminated by operator action.

7.4.2.2.2.3.1.17 Manual Initiation (IEEE 279-1971, Paragraph 4.17)

SLCS is manually initiated.

7.4.2.2.2.3.1.18 Access to Setpoint Adjustments, Calibration, and Test Points (IEEE 279-1971, Paragraph (4.18)

The operation of SLCS is not dependent on or affected by any setpoint adjustment or calibration. The control circuits, pumps and pump motors are accessible for test and service.

7.4.2.2.2.3.1.19 Identification of Protective Actions (IEEE 279-1971, Paragraph 4.19)

The explosive valve status, once fired, is indicated in the main control room.

7.4.2.2.2.3.1.20 Information Read-out (IEEE 279-1971, Paragraph 4.20)

The discharge flow rate of sodium pentaborate solution is indicated in the control room.

7.4.2.2.2.3.1.21 System Repair (IEEE 279-1971, Paragraph 4.21)

The control circuits, pumps and pump motors may be repaired or replaced during normal plant operation.

7.4.2.2.2.3.1.22 Identification (IEEE 279-1971, Paragraph 4.22)

Controls and instrumentation are located in control room panels and are clearly identified by nameplates.

7.4.2.2.2.3.2 IEEE 323-1971

Controls and instrumentation of SLCS required to perform its safety function are part of the Equipment Qualification Program for Class 1E equipment. Specific conformance requirements to IEEE 323 is covered in Section 3.11.

7.4.2.2.2.3.3 IEEE 338-1971

Except for the explosive valves, the design of SLCS permits periodic testing of the system from initiation devices to actuated devices. The explosive valves control circuit continuity is continuously monitored and annunciated in the main control room.

7.4.2.2.2.3.4 IEEE 344-1971

The control instrumentations of SLCS is classified as Seismic Category I and will remain functional following an SSE. Qualification and documentation procedures used for Seismic Category I equipment is discussed in Section 3.10a.

7.4.2.3 Residual Heat Removal System - Reactor Shutdown Cooling Mode Subsystem - Instrumentation and Controls

7.4.2.3.1 General Functional Requirements Conformance

The design of the RHRS reactor shutdown cooling subsystem meets the general functional requirements as follows:

(1) Valves.

Manual controls and position indicator are provided in the main control room. No single failure in the valves electrical system can result in a loss of capability to perform a safety function.

Interlocks are provided to close the valves if an isolation signal is present or if high reactor pressure exists.

(2) Instrumentation.

Shutdown Flow indicator is provided. Heat exchanger shutdown cooling water and service water temperatures are provided. Head spray flow indication is provided.

(3) Annunciation.

Valve motor overload. Heat exchanger cooling water outlet temperature high. Heat exchanger shutdown cooling water high temperature. Shutdown suction header high pressure. Pump motor overload.

(4) Pumps.

Manual controls and stop and start indicators are provided in the control room. Interlocks are provided to trip the pumps if the shutdown cooling valves are not properly set up.

Appendix 15A examines the protective sequences relative to the above event and equipment. Chapter 15 considers the operation and the system level aspects of this system.

7.4.2.3.2 Specific Regulatory Requirements Conformance

7.4.2.3.2.1 Conformance to NRC Regulatory Guides

Regulatory Guide requirements are not applicable because the RHR Shutdown Cooling Mode is used only to cool the reactor core for removal of decay heat with the reactor fully shut down.

7.4.2.3.2.2 Conformance to NRC Regulations - 10CFR50 Appendix A Requirements

7.4.2.3.2.2.1 General Design Criterion 34 Residual Heat Removal

The Reactor Shutdown Cooling Mode of RHR removes residual heat from the reactor when it is shutdown and the main steamlines are isolated to maintain the fuel and RCPB within design limits. On-site and off-site power are provided in the event that either source is not available when shutdown cooling is needed.

7.4.2.3.2.3 Conformance to Industry Codes and Standards

The only applicable industry codes or standards which apply to the RHRS Shutdown Cooling Mode are those considered for the LPCI and containment cooling modes described in Subsections 7.3.2a.1.2.3.1 and 7.3.2a.4.3. These modes share some of the same equipment.

7.4.2.4 Reactor Shutdown from Outside the Control Room (Remote Shutdown)

The remote shutdown panel is designed in response to the NRC General Design Criterion 19, which requires functional capabilities outside of the control room as described in Subsection 7.4.1.4.

The remote shutdown panel, by itself, does not perform any safety-related or protective function and is by definition not required to follow the design criteria of ESF systems.

All equipment interfacing with safety-related systems, such as RHR and RCIC, is designed to meet the criteria of those systems.

The design provides protection to safety grade systems which are necessary to achieve and maintain hot or cold shutdown from either the control room or from a remote location(s), assuming a postulated fire in any fire area including the Remote Shutdown Panel or the loss of habitability of the control room. Manual actions involving jumpering, rewiring or disconnecting circuits are not taken.

All other design criteria for the remote shutdown panel are discussed in Subsection 7.4.1.4.

7.4.3 REFERENCES

7.4.3.1 PLA 5963 “Application for License Amendment and Related Technical Specification Changes to Implement Full-Scope Alternative Source Term in Accordance with 10 CFR 50.67”.

TABLE 7.4-2

RHRS SHUTDOWN COOLING BYPASSES AND INTERLOCKS

Valve Function Manual Open	**Reactor Pressure Exceeds Shutdown Cooling Setpoint**	**Isolation Valve Closure Signal**	**Shutdown Return Line Excess Flow**
Inboard suction isolation	Cannot open	Cannot open	Cannot open
Outboard suction isolation	Cannot open	Cannot open	Cannot open
Reactor injection	Can open[1]	Cannot open	Can open
Head spray	Cannot open	Cannot open	Cannot open
Radwaste discharge inboard	Can open	Cannot open	Not applicable
Radwaste discharge outboard	Can open	Cannot open	Not applicable
Valve Function			
Auto (A) close or Manual (M) close			
Inboard suction isolation	Closes A and M	Closes A and M	Closes A and M
Outboard suction isolation	Closes A and M	Closes A and M	Closes A and M
Reactor injection	Closes M	Closes A and M	Closes M
Head spray	Closes A and M	Closes A and M	Closes A and M
Radwaste discharge inboard	Closes M	Closes A and M	Not Applicable
Radwaste discharge outboard	Closes M	Closes A and M	Not Applicable

(1) This valve is normally interlocked closed by reactor pressure but can be opened for test if the other series injection valve is closed.

TABLE 7.4-3

REMOTE SHUTDOWN PANEL INSTRUMENTATION

UNIT 1	UNIT 2	HOT SHUTDOWN	COLD SHUTDOWN	DESCRIPTION
RCIC System				
HSS-14901A	HSS-24901A	X	X	Instrumentation Transfer A
HSS-14902A	HSS-24902A	X	X	Control Transfer A
HSS-14903A	HSS-24903A	X	X	Control Transfer B
HSS-14904A	HSS-24904A	X	X	Control Transfer C
HSS-14905A	HSS-24905A	X	X	Control Transfer D
HSS-14902B	HSS-24902B	X	X	Control Transfer M
HSS-14903B	HSS-24903B	X	X	Control Transfer N
HV-E51-1F059	HV-E51-2F059	X	X	Control - RCIC turb exh to suppr pool valve
HV-E51-15012	HV-E51-25012	X	X	Control - RCIC turb stop valve
HV-E51-1F045	HV-E51-2F045	X	X	Control - RCIC turb shutoff valve
HV-E51-1F008	HV-E51-2F008	X	X	Control - RCIC steam supply outboard valve
HV-E51-1F007	HV-E51-2F007	X	X	Control - RCIC steam supply inboard valve
HV-E51-1F031	HV-E51-2F031	X	X	Control - RCIC suppression pool to pump suction valve
HV-E51-1F010	HV-E51-2F010	X	X	Control - RCIC cond storage to pump suction valve
FV-E51-1F019	FV-E51-2F019	X	X	Control - RCIC pump discharge min flow valve
HV-E51-1F012	HV-E51-2F012	X	X	Control - RCIC pump outboard disch valve
HV-E51-1F013	HV-E51-2F013	X	X	Control - RCIC pump inboard disch valve
1P-220	2P-220	X	X	Control - RCIC vac tank condensate pump
1P-219	2P-219	X	X	Control - RCIC barometric condenser vac pump
HV-E51-1F060	HV-E51-2F060	X	X	Control - RCIC condenser vac pump disch valve

TABLE 7.4-3 (Continued)

REMOTE SHUTDOWN PANEL INSTRUMENTATION

UNIT 1	UNIT 2	HOT SHUTDOWN	COLD SHUTDOWN	DESCRIPTION
HV-E51-1F062	HV-E51-2F062	X	X	Control - RCIC turb exh outboard vac breaker
HV-E51-1F084	HV-E51-2F084	X	X	Control - RCIC turb exh inboard vac breaker
HV-E51-1F022	HV-E51-2F022			Control - Test FCV to condensate storage tank
SI-15001	SI-25001	X	X	Indication - RCIC turb speed
FIC-14903	FIC-24903	X	X	Controller - RCIC pump injection flow
FI-14903	FI-24903	X	X	Indication - RCIC pump injection flow
Transfer switches actuate safe conditions for the following valves:				
HV-E51-1F046	HV-E51-2F046			RCIC turbine cooling water supply (open)
Reactor Recirculation System				
HV-B31-1F023B	HV-B31-2F023B	X	X	Control - Reactor recirculation pump suction
Nuclear Boiler System				
HV-B21-1F022A	HV-B21-2F022A	X	X	Status - Mn steam line inboard isolation valve A
HV-B21-1F022B	HV-B21-2F022B	X	X	Status - Mn steam line inboard isolation valve B
HV-B21-1F022C	HV-B21-2F022C	X	X	Status - Mn steam line inboard isolation valve C
HV-B21-1F022D	HV-B21-2F022D	X	X	Status - Mn steam line inboard isolation valve D
PI-14262	PI-24262	X	X	Indication - reactor vessel pressure
LI-14262	LI-24262	X	X	Indication - reactor vessel level
PSV-B21-1F013A	PSV-B21-2F013A	X	X	Control - RPV blowdown to suppression pool
PSV-B21-1F013B	PSV-B21-2F013B	X	X	Control - RPV blowdown to suppression pool
PSV-B21-1F013C	PSV-B21-2F013C	X	X	Control - RPV blowdown to suppression pool

TABLE 7.4-3 (Continued)

REMOTE SHUTDOWN PANEL INSTRUMENTATION

UNIT 1	UNIT 2	HOT SHUTDOWN	COLD SHUTDOWN	DESCRIPTION
RHR System				
HSS-15110A	HSS-25110A	X	X	Instrumentation transfer B
	HSS-25111A	X	X	Control transfer E
HSS-15112A	HSS-25112A	X	X	Control transfer F
HSS-15113A	HSS-25113A	X	X	Control transfer G
HSS-15114A	HSS-25114A	X	X	Control transfer H
HSS-15115A	HSS-25115A	X	X	Control transfer J
HSS-15116A	HSS-25116A	X	X	Control transfer K
HSS-15117A	HSS-25117A	X	X	Control transfer L
HSS-15111B	HSS-25111B	X	X	Control transfer R
HSS-15112B	HSS-25112B	X	X	Control transfer S
HSS-15113B	HSS-25113B	X	X	Control transfer T
HSS-15114B	HSS-25114B	X	X	Control transfer U
HSS-15115B	HSS-25115B	X	X	Control transfer V
HSS-15116B	HSS-25116B	X	X	Control transfer W
HSS-15117B	HSS-25117B	X	X	Control transfer X
HV-E11-1F009	HV-E11-2F009		X	Control - RHR pump suction from RPV inboard valve
HV-E11-1F008	HV-E11-2F008		X	Control - RHR pump suction from RPV outboard valve
HV-E11-1F006B	HV-E11-2F006A	X	X	Control - RHR pump suction from RPV
HV-E11-1F004B	HV-E11-2F004A	X	X	Control - RHR pump suction from suppression pool
1P-202B	2P-202A	X	X	Control - RHR pump

TABLE 7.4-3 (Continued)

REMOTE SHUTDOWN PANEL INSTRUMENTATION

UNIT 1	UNIT 2	HOT SHUTDOWN	COLD SHUTDOWN	DESCRIPTION
HV-E11-1F007B	HV-E11-2F007A	X	X	Control - RHR min flow valve to suppression pool
HV-E11-1F048B	HV-E11-2F048A	X	X	Control - RHR heat exchanger bypass valve
HV-E11-1F015B	HV-E11-2F015A		X	Control - RHR LPCI inboard valve
	HV-E11-F022		X	Control – RHR head spray inboard valve
	HV-E11-2F023		X	Control – RHR head spray outboard valve
	HV-25112		X	Control – RHR head spray supply valve
HV-E11-1F010B	HV-E11-2F010A		X	Control – RHR head spray Div. 1 cross connection
HV-E11-1F017B	HV-E11-2F017A	X	X	Control - RHR LPCI outboard valve
HV-E11-1F024B	HV-E11-2F024A	X	X	Control - RHR dsch to suppression pool (inboard)
HV-E11-1F028B	HV-E11-2F028A	X	X	Control - HR dsch to suppression pool (outboard)
HV-E11-1F047B	HV-E11-2F047A	X	X	Control - RHR pump dsch to RHR HX valve
HV-E11-1F003B	HV-E11-2F003A	X	X	Control - RHR heat exchanger outlet valve
HV-E11-1F040	HV-E11-2F040	X	X	Control - RHR dsch to LRW inboard valve
HV-E11-1F049	HV-E11-2F049		X	Control - RHR dsch to LRW outboard valve
HV-E11-1F103B	HV-E11-2F103A	X	X	Control - heat exchanger vent valve
HV-E11-1F104B	HV-E11-2F104A	X	X	Control - heat exchanger vent valve
FI-15105	FI-25105	X	X	Indication - RHR system flow Loop B (Unit 2 Loop A)
The following valves of the RHR system are actuated by a signal from the transfer switches to travel in the safe condition.				
HV-E11-1F006A	HV-E11-2F006B			Pump suction from reactor vessel (closed)
HV-E11-1F006C	HV-E11-2F006C			Pump suction from reactor vessel (closed)
	HV-E11-2F016A			Drywell spray line (closed)

TABLE 7.4-3 (Continued)

REMOTE SHUTDOWN PANEL INSTRUMENTATION

UNIT 1	UNIT 2	HOT SHUTDOWN	COLD SHUTDOWN	DESCRIPTION
HV-E11-1F073B	HV-E11-2F073A			RHR & RHRSW cross-tie (closed)
HV-E11-1F006D	HV-E11-2F006D			Pump suction from reactor (closed)
HV-E11-1F016B				Drywell spray line (closed)
HV-E11-1F027B	HV-E11-2F027A			Wet well spray line (closed)
	HV-E11-2F010B			Loop A & B cross tie (closed)
RHR Service Water System				
HV-11215B	HV-21215A	X	X	Control - RHRSW heat exchanger outlet valve
HV-11210B	HV-21210A	X	X	Control - RHRSW heat exchanger inlet valve
1P-506B	2P-506A	X	X	Control - RHR service water pump
HV-01222B	HV-01222A	X	X	Control - Spray pond loop B (A) bypass valve
HV-01224B1	HV-01224A1	X	X	Control - Spray pond dsch valve to network B1 (A1)
HV-01224B2	HV-01224A2	X	X	Control - Spray pond dsch valve to network B2 (B2)
FI-11207B	FI-21207A	X	X	Indication - RHR service water system flow
Emergency Service Water System				
OP-504B	OP-504A	X	X	Control - emergency service water pump
OP-504D	OP-504C	X	X	Control - emergency service water pump
Containment Instrument Gas System				
HV-12603	HV-22603	X	X	Control - containment gas inboard suction valve
SV-12605	SV-22605	X	X	Control - containment gas outboard suction valve
SV-12651	SV-22651	X	X	Control - containment gas injection valve

TABLE 7.4-3 (Continued)

REMOTE SHUTDOWN PANEL INSTRUMENTATION

UNIT 1	UNIT 2	HOT SHUTDOWN	COLD SHUTDOWN	DESCRIPTION
Containment and Suppression Pool Monitoring System				
PI-15728B	PI-25728A			Indication - containment drywell pressure
TI-15790B2	TI-25790A2			Indication - containment temperature
LI-15776B2	LI-25776A2	X	X	Indication - suppression pool level
TI-15725B	TI-25725B			Indication - suppression chamber temperature
TI-15751	TI-25751	X	X	Indication - suppression pool temperature (Div. I SPOTMOS)
TI-15752	TI-25752	X	X	Indication - suppression pool temperature (Div. II SPOTMOS)
Reactor Water Clean-Up System				
HSS-14454	HSS-24454			Control transfer switch
				Closes upon placing HSS-14454 and/or
HV-G33-1F004	HV-G33-2F001			HSS-24454 in Emergency position

TABLE 7.4-4

ALTERNATE CONTROL STRUCTURE HVAC CONTROL PANEL

COMMON	HOT SHUTDOWN	COLD SHUTDOWN	DESCRIPTION
CS Chilled Water System			
HSS-07899C	X	X	Control Transfer A
HSS-07899D	X	X	Control Transfer B
OP162A	X	X	Control-CW Circulating Pump
OP171A	X	X	Control-CW Emergency Condenser Water Circulating Pump
OK112A	X	X	Control-Chiller
HV-08693A	X	X	Control-CW ESW Control Valve
CSHVAC System			
HSS-07899A	X	X	Control Transfer C
HSS-07899B	X	X	Control Transfer D
OV118A	X	X	Control-SGTS Equipment Room Vent System Exhaust Fan
OV115A	X	X	Control- Computer Room HVAC Unit Fan
OV116A	X	X	Control-Battery Room Vent System Exhaust Fan
OV103A	X	X	Control-Control Structure HVAC Unit Fan

FIGURE 7.4-1 REPLACED BY DWGS. M-149, SH. 1 & M-150, SH. 1

FIGURE 7.4-2-1 REPLACED BY DWG. M1-E51-80, SH. 1

FIGURE 7.4-2-2 REPLACED BY DWG. M1-E51-80, SH. 2

FIGURE 7.4-2-3 REPLACED BY DWG. M1-E51-80, SH. 3

FIGURE 7.4-2-4 REPLACED BY DWG. M1-E51-80, SH. 4

FIGURE 7.4-3 REPLACED BY DWG. M-148, SH. 1

FIGURE 7.4-3 REPLACED BY DWG. M-148, SH. 1

FIGURE 7.4-4 REPLACED BY DWG. M1-C41-31, SH. 1

7.5 SAFETY-RELATED DISPLAY INSTRUMENTATION (SRDI)

Safety-Related Display Instrumentation (SRDI) required for safe functioning of the plant during normal operating and accident conditions is incorporated in a control room complex named the Advanced Control Room (ACR). It is necessary to consider the ACR as a whole to verify conformance to the requirements.

The ACR is a complex of major components, provided with the NSSS, for monitoring and controlling two units and providing safety functions. The entire complex consists of the Power Generation Control Complex (PGCC) in the upper relay room at the 754/ft. 0/in. level and the lower relay room at the 698/ft. 0/in. level, the Plant Integrated Computer System at the 698/ft. 0/in. level and the plant-operator interface at the 729/ft. 0/in. level.

a) PGCC

The PGCC provides support and interconnections to the systems panels of the upper and lower relay rooms and the computer room of the ACR complex. The plant-operator interface noted below is not mounted on PGCC, however, all other principles of the PGCC concept, e.g., separation, are used.

b) Plant-Operator Interface

Major components are in the main control room arranged as shown on Dwg. A-105, Sh. 1 and described on Figure 7.7-13A and include the following:

Unit Operating Benchboard Panel (C651/H12-P680) - houses controls, hardwired displays, the control rod position display and process displays which are computer generated from the Plant Integrated Computer System described briefly below and more completely in Section 7.7. The combination of displays on this panel and panel (C652/H12-P678), Standby Information Panel, are arranged by system and are used for start up, normal operation, and shut down.

See Section 7.7 for a description of the Plant Integrated Computer System, in regard to the displays on all control room panels.

Standby Information Panel (C652/H12-P678) - houses hardwired indicators and recorders required to start up, run, and shut down the plant. It is a hardwired backup to the Plant Integrated Computer System.

Reactor Core Cooling System Benchboard (C601/H12-P601) - houses hardwired indicators, recorders, manual controls, and annunciators for ESF systems including containment atmosphere systems.

Unit Services Benchboard (C668/H12-P870) - houses hardwired indicators, recorders, annunciators and controls for unit BOP system's functions which do not require the operator's immediate attention during normal operation of the power plant. Functions on this panel have been determined to be long time response functions.

Plant Operating (Common Plant) Benchboard (C653/H12-P853) - houses hardwired indicators, recorders, controls and annunciators for systems common to both units. Manual controls for the diesel generators are located here. It also houses two displays connected to the Plant Integrated Computer System.

Unit Monitoring Console (C684/C92-P628) - provides the unit operator with sit down surveillance of the unit operating benchboard and access to the Plant Integrated Computer System.

Safety Parameter Display System/Plant Monitoring Console (C667) - provides sit down surveillance of both units and access to Plant Computer System displays and Plant Computer Functions as well as SPDS displays.

Panels which support the primary plant-operator interface are mounted in back rows of the main control room and on PGCC floor modules on floors above and below the main control room.

The annunciator system is a hardwired system which provides the operator with the alarm information required for unit operation, startup, and shutdown. This system is independent of the Plant Integrated Computer System, is not part of the SRDI, and is not Class 1E.

c) Plant Integrated Computer System

The Plant Integrated Computer System is primarily used for monitoring unit operation by generating graphic displays to display optimized information for operator surveillance. In addition, it is capable of generating other displays, making NSSS and BOP calculations, recording historical data, logging data, and performing off-line functions.

In addition to the NSSS calculational capabilities, a Reactor Data Analysis System (RDAS) is available to monitor core conditions. The RDAS will receive data from the Plant Integrated Computer System and will be capable of providing information to be displayed in the ACR. The Plant Integrated Computer System and RDAS are not part of the SRDI and are not Class 1E.

The Plant Integrated Computer System makes use of redundant computers for critical applications to maximize availability. As stated above, the information important to safety displayed by the Plant Integrated Computer System, is also displayed on hardwired indicators, recorders and alarm annunciators. Alarms in Plant Integrated Computer System displays are redundant to those provided by the hardwire annunciator system. While the operator makes primary use of the computer generated displays during normal operation, he is not dependent on computers or annunciators to operate the plant safely during startup, steady-state operation, or any design basis events.

Plant Integrated Computer System displays are designed to be used on the ACR benchboard panels, and are organized by system and plant mode of operation. The operator can select displays on most benchboard displays, appropriate to each benchboard area and plant mode of operation, with one select operation from a control position on each benchboard associated with that display. The operator can individually call up any available display on any display for the Plant Integrated Computer System.

7.5.1a Description

This section describes the hardwired displays noted above in the ACR description. It does not describe computer generated displays. SRDI is described on the basis of NSSS and non-NSSS responsibility by system. NSSS and non-NSSS share panels and use the same types of instruments which were provided with the NSSS. (Some of the instrumentation described below may be non-SRDI, and is provided to give a more complete picture of the totality of information available to the Operator in the ACR. Reference should be made to Tables 7.5-1 through 7.5-7a to determine which instrumentation is part of the SRDI.)

Therefore, control room panels and instruments, unless otherwise noted, use NSSS qualification and separation techniques.

As noted in Section 7.1, sections with an "a" describe NSSS and "b" denote non-NSSS.

7.5.1a.1 General Description of NSSS Safety-Related Display Instrumentation

This section describes the instrumentation which provides information to the operator to enable him to perform required safety functions.

The Safety-Related Display Instrumentation is listed in Table 7.5-1. It tabulates SRDI equipment which may be illustrated on the various system figures located in Sections 7.2, 7.3, 7.4, and 7.6.

The instrumentation and ranges shown in Tables 7.5-1 through 7.5-7a are selected on the basis of giving the reactor operator information to perform manual safety functions and yet the capability to track process variables pertinent to safety during expected operational perturbations.

Separation of redundant display instrumentation and electrical isolation of redundant sensors and channels is illustrated in the Elementary Diagrams, Electrical Schematics and the Loop Diagrams associated with the individual circuits. Additional information on the redundancy of monitored variables and component sensors and channels can be found in Design Specifications, P&ID and Design Basis Documents.

7.5.1a.2 Normal Operation

The information channel ranges and hardwired indicators and recorders were selected on the basis of giving the reactor operator the necessary information to perform all the normal plant startup, steady-state maneuvers, with the required precision and to be able to track all the process variables pertinent to safety during expected operational perturbations.

7.5.1a.3 Abnormal Transient Occurrences

The ranges of indicators and recorders provide adequate information for all abnormal transient events.

7.5.1a.4 Accident Conditions

The DBA-LOCA is the most extreme postulated operational action event. Adequate instrumentation is provided from the standpoint of operator action, information, and event tracking requirements, in order to cover all other design-basis events or incident requirements.

7.5.1a.4.1 Initial Accident Event

The design basis of all ESF to mitigate the accident event condition takes into consideration that no operator action or assistance is assumed for the first twenty minutes of the event with one exception. The only operator action assumed in the Section 6.3 ECCS analysis is that a RHR heat exchanger is placed in service within 20 minutes into the accident. This requirement, therefore, makes it mandatory that all protective action necessary in the first twenty minutes be "automatic." Therefore, although continuous tracking of process variables is available, no operator action based on them is required.

7.5.1a.4.2 Post-Accident Tracking

No operator action (and, therefore, post-accident information) is required for at least twenty minutes following an accident although the various monitoring devices are continuously tracking and indicating important parameter information and displaying it to the operator as well as recording appropriate data.

The DBA-LOCA serves as the envelope accident sequence event to provide and demonstrate the plant's post-accident tracking capabilities. All other accidents have less severe and limiting tracking requirements. Refer to Chapter 15 "Accident Analysis."

The following process instrumentation provides information to the operator after a DBA-LOCA to monitor reactor parameters.

7.5.1a.4.2.1 Reactor Water Level

(1) Two independent wide range water level signals are transmitted to and recorded on two separate recorders. The differential pressure transmitters have one side connected to a condensing chamber reference leg and the other side connected directly to a vessel nozzle for the variable leg. The water level system is uncompensated for variation in reactor water density and is calibrated to be most accurate at operational pressure and temperature conditions at which it is used. The range of the recorded level is from the top of the feedwater control range (just above the high level turbine trip point) down to a point near the top of the active fuel. The power sources for the two channels are separate, divisionalized Class 1E buses.

(2) Two fuel zone water level signals are transmitted from two independent differential pressure transmitters. One signal goes to a fuel zone water level indicator and the other water level signal goes to a fuel zone water level recorder. The differential pressure transmitters have one side connected to a condensing chamber reference leg and the other side connected directly to the bottom tap of a calibrated jet pump for the variable leg. The fuel zone water level system is uncompensated for variation in reactor water density and is calibrated to be most accurate at saturated atmospheric conditions at which it is used. The level range is from over the top of the active fuel to near the bottom of the active fuel. The ranges of the wide range level and the fuel zone level will overlap. Power sources are as stated in the previous paragraph.

(3) Two extended range water level signals are transmitted from two independent differential pressure transmitters. Each level transmitter is connected to a dual indicator which displays both wide and extended range. The differential transmitter reference leg is tubed

to a condensing chamber and the variable leg to vessel nozzle. The water level system is uncompensated for variation in reactor water density and is calibrated to be most accurate at operational pressure and temperature conditions at which it is used. The level range is from over the top of the steam lines to near the top of the active fuel. The range of the extended level will overlap the wide range level. Power sources are as stated in the first paragraph.

(4) Non-condensible gases may exist in the reference legs of the nuclear boiler instrumentation system. During a rapid or normal depressurization of the reactor, these gases may come out of solution displacing water from the reference legs and leading to false high level indications. The non-condensible gases are believed to be H_2 and O_2 generated by the dissociation of H_2O from neutron flux. (Reference NRC Generic Letter 92-04 and Information Notice 93-27.) All three of the following conditions must exist in order for these level indication errors to occur:

1. An elevated level of non-condensible gases in the condensing chamber,

2. A migration of the gases into the reference leg, and

3. A Reactor Pressure Vessel depressurization (below 450 psig).

Non-condensible gases will exist in the condensing chamber during normal operations. Vessel depressurizations will inevitably occur during the life of the plant and migration of gases may be undetectable. To prevent level indication errors from occurring, the concentration of non-condensibles in the reference legs must be kept below 150 ppmv. This value has been determined to be acceptable by Boiling Water Reactor Owner's Group (BWROG) testing.

Vent lines from condensing chambers XY-B21-1/2D004A and XY-B21-1/2D004B to the variable leg piping from vessel nozzles N11A and N11B and from condensing chambers XY-B21-1/2D002 and XY-1/24202 to the RPV head vent line are installed to prevent non-condensible gas build-up in the reference leg by providing a path to sweep away any gases which may build-up in the chamber. This eliminates condition 1 above, by assuming that the non-condensible gases never build-up in the steam space of the condensing chamber.

7.5.1a.4.2.2 Reactor Pressure

Three independent reactor pressure signals (ranged 0 to 1500 psig) are transmitted and indicated on control room panels. Two signals are recorded on two separate recorders. Power sources are as stated in Subsection 7.5.1a.4.2.1.

7.5.1a.4.2.3 Reactor Shutdown, Isolation, and Core Cooling Indication

7.5.1a.4.2.3.1 Reactor Operator Information and Observations

The information furnished to the main control room operator permits him to assess reactor shutdown, isolation, and availability of emergency core cooling following the postulated accident. Some of the information listed below is provided by non-SRDI equipment.

(1) Operator verification that reactor shutdown has occurred may be made by observing the following indications:

a. Control rod status lamps indicating each rod fully inserted. The power source is one of the instrument AC buses.

b. Control rod scram pilot valve indicating lamps which are illuminated when the control rod scram pilot valves are energized. The power source is an RPS MG Set.

c. Neutron monitoring power range channels and recorders downscale. The power sources are RPS MG sets.

d. Annunciators for reactor protection system variables and trip logic in the tripped state. The power source is dc from a plant battery.

(2) The reactor operator may verify reactor isolation by observing the following indications:

a. Isolation valve position lamps indicating valve closure. The power source is the same as for the associated valve motor-operator.

b. Main steamline flow indication downscale. The power source is instrument AC.

c. Annunciators for the containment and reactor vessel isolation system variables and trip logic in the tripped state. The power source is DC from one or more plant batteries.

(3) Operation of the emergency core cooling and the RCIC system following the accident may be verified by observing the following indications:

a. Annunciators for HPCI, CS, RHR, ADS, RCIC sensor initiation logic trips. The power source is DC from a plant battery.

b. Flow and pressure indications for each emergency core cooling system. The power sources are independent and from the same standby buses as the driven equipment.

c. RCIC isolation valve position lights indicating to open valves. The power source is from the same bus as the valve motive power.

d. Injection valve position lights indicating either open or closed valves. The power source is the same as the valve motor.

e. Relief valve initiation circuit status by open or closed indicator lamps. The power source is the same as for the pilot solenoid.

f. Relief valve position may be inferred from reactor pressure indications. The power source is instrument AC from the standby AC systems.

g. Relief valve discharge pipe temperature monitors. The power source is instrument AC.

h. Relief valve position is indicated by acoustic monitors (see Subsection 18.1.24.3).

7.5.1a.4.2.3.2 System Operation Information-Display Equipment

(1) RCIC

Two meters, one displaying RCIC discharge flow rate and one displaying RCIC pump discharge pressure, are located in the main control room.

(2) HPCI

Three meters, one displaying HPCI discharge flow rate and one displaying HPCI pump discharge pressure, and one displaying HPCI turbine steam pressure, are located in the main control room.

(3) CS System

Two meters displaying CS flow rate are located in the main control room.

(4) RHR

One meter displaying RHR flow rate for each of the two RHR loops, and one meter displaying RHR service water flow rate for each of the two service water loops are located in the main control room.

(5) Miscellaneous

In addition to the above displays, the following also provide information to enable the reactor operator in the main control room to perform post-accident safety functions:

a. Control rod status lamps

b. Scram pilot valve status lamps

c. Neutron flux level meters.

7.5.1a.4.2.3.3 System Operation Information-Display Equipment Qualification

Environmental Qualification of Safety-Related Display Instrumentation is addressed in the Susquehanna SES Environmental Qualification Program for Class 1E Equipment. Additionally, some of the safety-related display instrumentation help to satisfy our commitment to Regulatory Guide 1.97, Rev. 2, and meet the additional requirements as committed to for that regulatory guide.

7.5.1a.4.2.4 Containment Indications

Refer to Table 7.5-3.

7.5.1b Description of non-NSSS Safety-Related Displays

Non-NSSS safety-related displays provide the operator with information to monitor certain containment conditions, non-NSSS ESF systems, and auxiliary support systems.

Description is provided in the form of Tables 7.5-2 through 7.5-7, which list details of the displays by ESF systems as previously listed.

7.5.1b.1 Containment Isolation

Refer to Table 6.2-12 for list of isolation valves. All containment isolation valves have status indication lights on control room panels (C651/H12-P680) or (C601/H12-P601).

7.5.1b.2 Combustible Gas Control

Refer to Subsection 6.2.5 for the hydrogen recombiner instrumentation. Table 7.5-3 lists displays for containment atmosphere monitoring.

7.5.1b.3 Primary Containment Vacuum Relief

Status indication only is provided for test operation described in Subsection 7.3.1.1b.3. Containment pressures are noted in Table 7.5-3.

7.5.1b.4 Standby Gas Treatment, RX Building Recirculation and Isolation System

These systems are listed in Table 7.5-4.

7.5.1b.5 Habitability Systems

These systems are listed in Table 7.5-2.

7.5.1b.6 Auxiliary Support Systems

Emergency service water system displays are listed in Table 7.5-5. RHR service water system displays are listed in Table 7.5-6. Containment instrument gas system displays are listed in Table 7.5-7.

7.5.1b.7 Bypass Indication System

This system is established and used during normal reactor operations to control planned actions whose manual initiation would effectively disable any safety function.

The design complies with Regulatory Guide 1.47 (May 1973).

7.5.1b.7.1 System Description

The primary control method is administrative control which is exercised by the unit control room operator; however, these administrative controls are supplemented by an automated Bypass Indication System (BIS). Restricted access to various in-plant areas is also used to supplement the administrative control.

The BIS indicators annunciate on the Reactor Core Cooling System benchboard in the control room, automatically, at the system level, indicates the bypass or deliberately induced inoperability of a safety-related system.

The BIS is provided with the capability for manual initiation of each system-level indicator. This manual-entry method is used to cover system components that have not been provided with automatic BIS input capability.

The Bypass Indication System for non-NSSS Systems consists of the following:

a) Two indicator lamp boxes each consisting of 4x6 array of lights and located in the control room on the Reactor Core Cooling System benchboard. Each window, provided with dual lamps and an integral pushbutton for lamp test, will indicate a system-level bypass.

b) Two annunciator windows, located above the lamp box assemblies will alert the operator that a system-level bypass has occurred.

c) The indication of the bypass status of components, systems, channels, and/or divisions is provided on a backrow panel in the main control room. This panel contains the hardware logic required to translate the combination of component bypasses that constitute system bypasses.

A manual control switch for each safety system enables the operator to indicate a system's inoperability whenever a component which is not included in the automatic indication system is deliberately bypassed.

The BIS and its logic can be tested by depressing test pushbuttons.

The following systems provide inputs to the Bypass Indication System:

Emergency Service Water System
Diesel Generator Control System
Diesel Generator Output System
Diesel Generator Auxiliary System
Control Room Habitability System
Standby Gas Treatment System
Battery Room Exhaust System
RHR Service Water System
Remote Shutdown Panel
Containment Instrument Gas System
Containment Hydrogen Recombiner System
Containment Isolation System
Drywell Ventilation System
Reactor Building Emergency Switchgear And Motor Control Center Cooling
Control Structure HVAC Alternate Operation System

Table 7.5-8 identifies the system and components of the automatic Bypass Indication System.

7.5.1b.8 Post-Accident Neutron Flux Monitoring System

The post-accident neutron flux monitoring function is performed by the Average Power Range Monitoring System (APRM). This system is discussed in Section 7.6.1a.5.6.

The use of the conventional Nuclear Monitoring System (NMS), in particular the APRMs, to perform the post-accident monitoring function was evaluated from an Emergency Procedure Guideline (EPG) standpoint in NEDO-31558A. The results from the BWROG analysis show a separate accident monitoring system (e.g., the ex-core system) is not required for accident conditions, since the conventional NMS would provide adequate indication. The analysis also showed that, since operators could use other plant parameters to determine neutron flux, even a failure of the conventional NMS would not compromise plant safety.

The NRC Office of Nuclear Reactor Regulation found the BWROG report (NEDO-31558) acceptable and concluded that "Category 1 neutron flux monitoring instrumentation is not needed for existing BWRs to cope with LOCA, ATWAS, or other accidents that do not result in severe core damage conditions. Instrumentation to monitor the progression of core melt accidents would be best addressed by the current severe accident management program."

The ex-core neutron flux monitoring system was originally installed at SSES to meet the requirements of Regulatory Guide 1.97, Revision 2. Based on the results of the BWROG report, the NRC position on this issue, and SSES specific reviews, the post-accident neutron flux monitoring function was changed to be performed by the Average Power Range Monitoring System (APRM). The excore neutron flux monitoring system has been removed from service.

7.5.1b.8.1 (This Subsection Has Been Deleted)

7.5.2a Analysis of NSSS Safety-Related Displays

7.5.2a.1 General

The safety-related display instrumentation provides adequate information to allow the reactor operator to perform the necessary manual safety function.

All protective actions required under accident conditions for the NSSS equipment are automatic, redundant, and decisive such that immediate reactor operator information or intervention is unnecessary.

The ACR design improves the availability of the plant by providing the operator with more readily accessible information and control of the various plant operational parameters. This is accomplished by the logical organization of functional plant system indicators, displays, controls and a computer display system.

A complete description and analysis of design criteria applicable to the hardwired indicators, displays and controls for the various safety-related systems are described elsewhere in Chapter 7 with the systems they serve. Redundancy and independence or diversity are provided in all of those information systems which are used as a basis for operator-controlled safeguards action.

A complete failure of the Plant Integrated Computer System which serves as an active part of the operator/plant interface does not degrade the quantity or quality of necessary information presented by hardwired devices needed to determine the status or action of plant safety systems.

7.5.2a.1.1 DESIGN CRITERIA

7.5.2a.1.1.1 Power Generation Control Complex Criteria

The applicable design criteria for the PGCC aspects of the ACR design are provided in General Electric Licensing Topical Report, NEDO-10466-A.

7.5.2a.1.1.2 Advance Control Room Design and Operational Criteria

7.5.2a.1.1.2.1 Design Criteria

(1) The implementation of the ACR design does not affect the ability of any system to meet the requirements of its design specification.

(2) In the implementation of the ACR design, instruments for the reactor protection system and the engineered safety features meet the system design requirements of the systems they serve. They are located at easily visible and accessible positions.

(3) The design employs modular techniques to implement distinct circuits so that separation and redundancy requirements are satisfied.

The interfacing circuitry between the Class 1E safety systems and the non-Class 1E non-safety Display Control System utilizes both digital and analog safety signals. Isolation devices have not been provided between certain Class 1E systems and the non-safety Display Control System.

As an alternative to providing isolation devices, analyses of the Class 1E safety systems from which the non-Class 1E non-safety Display Control System derive their signals was performed. The analyses evaluated the effects of an open or short circuit in the non-safety system component and a fault voltage of 250 VDC (288 VDC max.) on the cabling connecting the non-safety system component to the Class 1E system. The analyses determined that the design of the interfacing circuitry between the Class 1E safety systems and the non-Class 1E non-safety Display Control System was acceptable by demonstrating that the Class 1E safety systems are not degraded below an acceptable level when postulating faults in the non-safety Display Control System that derive their signals from Class 1E circuits. This acceptance is documented in a letter dated November 5, 1997 from the USNRC entitled, “Single Failure Analysis of Class 1E/Non Class 1E Interface Circuits in the GE Scope of Supply, Susquehanna Steam Electric Station, Units 1 and 2 (TAC NOS. M90541 and M90542).”

(4) All reactor protection system components incorporated by the ACR design are of at least comparable quality to the components that are integral to the design of related systems and have demonstrated operational reliability.

(5) The implementation of the ACR makes use of modular control and indication components. Plug-connected cables are used to facilitate removal of the modules. Cables and

connectors are easily accessible and identified. Connector separation requires deliberate action.

(6) Cabling is identified at each connection point, in the panels, wireways and termination cabinets so that visual verification of separation can be easily made. Connectors and cabling at connection points are clearly marked with system and reference designations.

(7) All plant system controls remain hardwired. They are external to, and not dependent upon, the computer systems.

(8) Simplification of controls is restricted to manual functions operating independently from, but compatible with, the automatic protective functions.

(9) All safety system functions, either automatic protective or interlocking, including controls, displays and alarms remain hardwired. These system functions can be changed only by physically modifying the wiring or equipment. They are independent from the computer systems.

7.5.2a.1.1.2.2 Operating Criteria

The implementation of the ACR design provides for planned operations or normal plant operation under planned conditions in the absence of significant abnormalities. Operations subsequent to an incident (transient, accident or special event) are not considered planned operations until the procedures being followed or equipment being used are identical to those used during any one of the defined planned operations. The established planned operations can be considered as a chronological sequence from refueling outage to refueling outage. The following planned operations are identified:

a. Refueling Outage
b. Achieving Criticality
c. Heatup
d. Reactor Power Operation
e. Achieving Shutdown
f. Cooldown

7.5.2a.2 Normal Operation

Subsection 7.5.1a.2 describes the basis for selecting ranges for instrumentation. Since abnormal, transient, or accident condition monitoring requirements exceed those for normal operation, the normal ranges are covered adequately. The accuracy of safety-related display instrumentation is included in the Technical Specifications.

7.5.2a.3 Abnormal Transient Occurrences

These occurrences are not limiting from the point of view of instrument ranges and functional capability. (See Subsection 7.5.2a.4.)

The variety of indications which may be utilized to verify that shutdown and isolation safety actions have been accomplished as required (see Subsection 7.5.1a.4.2.3) meets the requirements of IEEE 279-1971.

7.5.2a.4 Accident Conditions

The DBA-LOCA is the most extreme operational event. Information readouts are designed to accommodate this event from the standpoint of operator actions, information, and event tracking requirements, and therefore, will cover all other design basis events or incident requirements. Refer to Chapter 15 "Accident Analysis."

7.5.2a.4.1 Initial Accident Event

The design basis of all engineered safety features to mitigate accident event condition takes into consideration that "no operator action or assistance is required or recommended for the first twenty (20) minutes of the event with one exception." The only operator action assumed in the Section 6.3 ECCS analysis is that a RHR heat exchanger is placed in service within 20 minutes into the accident. This requirement therefore makes it mandatory that all protective action necessary in the first twenty minutes be "automatic", excluding the exception above. Therefore, although continuous tracking of variables is available, no operator action based on them is intended.

7.5.2a.4.2 Post-Accident Tracking

The operator has many options which are procedures controlled based on the following information:

(1) Reactor Water Level and Pressure

Vessel water level and pressure instrumentation is redundant and electrically independent. Power is from independent divisionalized Class 1E buses. This instrumentation complies with the independence and redundancy requirements of IEEE 279-1971 and provides recorded outputs. All equipment except the recorders and indicators will perform their required functions during a seismic event.

The reactor water level and pressure sensors are mounted on independent local panels. The sensors and recorders are designed to operate during normal operation and post-accident environmental conditions. The design criteria that the instruments must meet are discussed in Subsection 7.1.2a.1.31.

Refer to Table 7.5-1 during the following discussion.

A combination of three different level instrument ranges, with two independent channels each, monitor Reactor Vessel Level:

1. The extended range instrumentation measure from over the top of the steam lines to near the top of the active fuel and outputs to three control room level indicators per channel.

2. The wide range instrumentation measures from the top of the feedwater control range (just above the high level turbine trip point) down to a point near the top of the active fuel and outputs to one control room recorder and three control room indicators per channel.

3. The fuel zone range instrumentation measures from over the top of the active fuel to near the bottom of the active fuel and outputs to a control recorder (one channel) and a control room indicator (one channel).

These three ranges of instruments combine to provide level indication from the bottom of the Core to above the main steam line.

Two independent channels of reactor vessel pressure (ranged 0 to 1500 psig) are transmitted to and recorded on two separate recorders.

The recorders are located in the control room on the Reactor Core Cooling System benchboard. In the case of the wide range level, one recorder is with the Division 1 systems and the other recorder is with the Division 2 systems. The design, considering the accuracy, range and quality of the instrumentation, is adequate to provide the operator with accurate reactor water level and reactor pressure information during normal operation, abnormal, transient, and accident conditions.

(2) ECCS

Performance of ECCS following an accident may be verified by observing redundant and independent indications as described in Subsection 7.5.1a.4.2.3(3) and fully satisfies the need for operator verification of operation of the system.

(3) Continued Shutdown Tracking

The various indications described in Subsection 7.5.1a.4.2 provide adequate information regarding status of the reactor vessel level and pressure to allow reactor operators to make proper decisions regarding core and containment cooling operations, and fully satisfies the need for post-accident surveillance of these variables.

7.5.2a.4.3 Safe Shutdown Display

The safe shutdown display instrumentation in Subsection 7.5.1a includes the control rod status lamps, scram pilot valve status lamps, and neutron monitoring instrumentation. These displays are expected to remain operable for a long enough time following an accident to indicate the occurrence of safe and orderly shutdown.

The displays provide redundancy by being in three separate systems and the rod position and neutron monitoring outputs are recorded (the former by the process computer). The systems cited are either manually or automatically connectable to the standby AC power.

7.5.2a.4.4 Engineered Safety Feature Operation Display

The other operating instruments covered in Subsection 7.5.1a provide indication of operation of various safety systems but, except for the isolation valve status, do not constitute post-accident

surveillance or safe shutdown display. Isolation valve status indication is designed to perform as stated in Subsection 7.5.2a.4.

7.5.2a.5 Compliance with Regulatory/Industry Standards

7.5.2a.5.1 Conformance to IEEE-279-1971

7.5.2a.5.1.1 General

The rod status and scram pilot valve status circuits do not individually meet the requirements of IEEE-279. Jointly, however, they do meet the requirements applicable to display instrumentation except for seismic qualification.

Safety-related portions of the neutron monitoring system are designed to meet all the requirements of IEEE 279 as a part of the RPS. However, its RPS function is a "fail-safe" function while safe shutdown display is not. Further, its RPS function terminates with the generation and maintenance of a shutdown signal. In this regard, post DBA environment conditions may cause malfunction but not until the RPS function of scram generation is concluded. This makes it impossible to claim continuous indicating capability for safe shutdown display by the neutron monitoring system. Redundancy, power switching capabilities, RPS capabilities, and expected time to failure under DBA environment conditions allow the neutron monitoring system to meet the functional requirements of IEEE-279 as applicable to display instrumentation.

7.5.2a.5.1.2 Automatic Initiation of Protective Action (IEEE-279, Paragraph 4.1)

This requirement is not applicable to the safe shutdown display instrumentation.

7.5.2a.5.1.3 Single Failure Criterion (IEEE 279, Paragraph 4.2)

Indications associated with redundant channels meet the single failure criterion.

7.5.2a.5.1.4 Quality of Indicators (IEEE 279, Paragraph 4.3)

The quality of the indicators will be in accordance with their importance to safety.

7.5.2a.5.1.5 Equipment Qualification (IEEE 279, Paragraph 4.4)

All safety-related equipment except indicators and recorders will be qualified to assure performance of their safety-related functions including post-seismic performance.

7.5.2a.5.1.6 Channel Integrity (IEEE 279, Paragraph 4.5)

The failure of any indicator will not adversely affect channel integrity.

7.5.2a.5.1.7 Channel Independence (IEEE 279, Paragraph 4.6)

The failure of any indicator will not adversely affect channel independence.

7.5.2a.5.1.8 Control and Protection System Interaction (IEEE 279, Paragraph 4.7)

This design requirement is not applicable to the safe shutdown display instrumentation.

7.5.2a.5.1.9 Deviation of System Inputs (IEEE 279, Paragraph 4.8)

This is not applicable to display instrumentation.

7.5.2a.5.1.10 Capability for Sensor Checks (IEEE 279, Paragraph 4.9)

This is not applicable to safe shutdown display instrumentation.

7.5.2a.5.1.11 Capability for Test and Calibration (IEEE 279, Paragraph 4.10)

This is not applicable.

7.5.2a.5.1.12 Channel Bypass (IEEE 279, Paragraph 4.11)

This is not applicable.

7.5.2a.5.1.13 Operating Bypasses (IEEE 279, Paragraph 4.12)

This is not applicable.

7.5.2a.5.1.14 Indication of Bypass (IEEE 279, Paragraph 4.13)

This is not applicable.

7.5.2a.5.1.15 Access to Means for Bypassing (IEEE 279, Paragraph 4.14)

Bypassing is not applicable.

7.5.2a.5.1.16 Multiple Setpoints (IEEE 279, Paragraph 4.15)

This design requirement is not applicable to shutdown instrumentation.

7.5.2a.5.1.17 Completion of Protective Action Once it is Initiated (IEEE 279, Paragraph 4.16)

This is not applicable.

7.5.2a.5.1.18 Manual Actuation (IEEE 279, Paragraph 4.17)

Manual actuation is not applicable to display instrumentation.

7.5.2a.5.1.19 Access to Setpoints (IEEE 279, Paragraph 4.18)

This design requirement is not applicable to display instrumentation.

7.5.2a.5.1.20 Identification of Protective Action (IEEE 279, Paragraph 4.19)

Indicators will indicate protective actions to the channel level.

7.5.2a.5.1.21 Information Read Out (IEEE 279, Paragraph 4.20)

Indicators will provide required information.

7.5.2a.5.1.22 System Repair (IEEE 279, Paragraph 4.21)

This design requirement is not applicable, except for the role played by the indicators in providing diagnostic information.

7.5.2a.5.1.23 Identification (IEEE 279, Paragraph 4.22)

Indicators will be identified.

7.5.2a.5.2 Conformance with IEEE 323

See Subsection 3.11.2.1.

7.5.2a.5.3 Conformance with IEEE 344

See Section 3.10a.2.1.

7.5.2a.5.4 Regulatory Guide 1.47

The Safety-Related Display Instrumentation (SRDI) is designed to operate continuously, and there is no requirement for bypass provisions. Removal of instrumentations for servicing during plant operation is administratively controlled.

7.5.2a.5.5 Regulatory Guide 1.97

Safety-related display instrumentation will be in accordance with PP&L's commitment to Regulatory Guide 1.97, Rev. 2. The systems are discussed in the referenced sections:

- Post-Accident ARMS, see Subsection 12.3.4
- Suppression Pool/Drywell Spray Flow, see Subsection 5.4.7.1

  Standby Liquid Control System, see Subsection 9.3.5.2 Instrument Gas Bottles Pressure Indication, see Subsection 7.3.1.1b.8.3.
- RPV Water Level/Pressure, see Subsection 7.5.1a.4.2
- RHR Heat Exchanger Outlet Temperature, see Subsection 7.4.2.3.1

All other items required for commitments to Regulatory Guide 1.97, Revision 2, appear in the appropriate subsections and tables in Section 7.5.

7.5.2a.5.6 10CFR50, Appendix B

Safety-related display instrumentation environmental qualification is addressed in PP&L's commitment to Regulatory Guide 1.97, Rev. 2.

7.5.2b Analysis of non-NSSS Safety-Related Display Instrumentation

7.5.2b.1 Identification, Redundancy, Accuracy

SRDI which is provided under non-NSSS responsibility is summarized in Subsection 7.5.1b and in Tables 7.5-2 through 7.5-7a. The safety-related displays are for ESF systems and for auxiliary support systems. These tables illustrate the redundancy applied to the displays and location of the panel on which the instrument is mounted, within the plant-operator interface.

7.5.2b.2 Isolation, Separation

Table 1.7-1 lists elementary diagrams which show electrical isolation of divisions. It should be noted that these divisions are routed through separate divisionalized panels and use the divisional separation and identification provisions of the PGCC. Outside PGCC, refer to Section 3.12.

7.5.2b.3 Qualification of Components

Primary containment isolation, primary containment vacuum relief, containment atmosphere, ESW, RHRSW and containment instrument gas rely on NSSS qualifications in Section 3.10a.

Standby gas treatment, reactor building recirculation, habitability systems use qualification described in Section 3.10b. Post-accident monitoring instruments in panel C693, C690A&B, and Bypass Indication are also qualified as described in Section 3.10b.

7.5.2b.4 Capability for Checking

Under normal conditions periodic cross checking between indicators of two divisions, and checking against previous records will provide notification of malfunction. Under any conditions, normal or abnormal, if there is disagreement of readings, it is necessary to check to determine which indication is correct. The suspect indication is checked against a third indictor or checked against an alternate indicator from which the correct indication may be inferred.

7.5.2b.5 Analysis of the Bypass Indication System

The Bypass Indication System (BIS) indicates on panel (C601/H12-P601) that any non-NSSS ESF or ESF supporting system is inoperable. That is indication of inoperability at a system level. Indication of component inoperability within the non-NSSS ESF systems is provided on Panel C694. Both panels are located in the operator interface ring of panels.

Table 7.5-8 lists the systems and components included in the system.

Manual capability for testing operability of each indication is provided. The system design maintains the divisionalized structure of the ESF and signals to the BIS are mechanically and electrically isolated from the associated ESF system.

Regulatory Guide 1.47 and Branch Technical Position E1CSB 21 are complied with in the design of BIS.

7.5.2b.6 This Section Has Been Deleted

TABLE 7.5-1
SAFETY RELATED DISPLAY INSTRUMENTATION

Design Criteria	Type Readout#		Panel# Number	Number of Channels	Rated Range	Location	PAM
Reactor Vessel Pressure	Recorder	UR14201A/B	1C601	2	0-1500 PSIG	CR	X
	Indicator	PI14202A/B PI14204A/B PI14202A1/B1 PI14262	1C601 1C601 1C651 1C201	2 2 2 1	0-1500 PSIG 0-1500 PSIG 0-1500 PSIG 0-1500 PSIG	CR CR CR RSP	X X X X
Reactor Vessel Water Level	Recorder	UR14201A/B	1C601	2	-150"/0/+60" (wide)	CR	X
	Recorder	UR14201a	1C601	1	-310"/TAF/-110" (fuel zone)	CR	X
	Indicator	LI14201A/B	1C601	2	-150"/0/+180" (extended) -150"/0/+60" (wide)	CR	X
	Indicator	LI14203A	1C601	2	-150"/0/+180" (extended) -150"/0/+60" (wide)	CR	X
	Indicator	LI14201A1/B1	1C651	2	-150"/0/+180" (extended) -150"/0/+60" (wide)	CR	X
	Indicator	UR14201B LI14262	1C601 1C201	1 1	-310"/TAF/-110" (fuel zone) -150"/0/+60" (wide)	CR RSP	X
RCIC Flow	Indicator	FIE511R600-1	1C601	1	0-700 GPM	CR	X
RCIC Discharge Pressure	Indicator	PIE511R601	1C601	1	0-1500 PSIG	CR	
HPCI Flow	Indicator	FIE411R600-1	1C601	1	0-6000 GPM	CR	X
HPCI Discharge Pressure	Indicator	PIE411R601	1C601	1	0-1800 PSIG	CR	
HPCI Turbine Steam Pressure	Indicator	PIE411R602	1C601		0-1500 PSIG	CR	
CS Flow	Indicator	FIE211R601A	1C601	2	0-10,000 GPM	CR	X
RHR Flow (LPCI and Shutdown Cooling)	Indicator	FIE111R603A	1C601	2	0-30,000 GPM	CR	
RHR Service Water Flow	Indicator	FIE111R602A	1C601	2	0-12,000 GPM	CR	
RHR Heat Exchanger Outlet Temperature	Indicator	TI15127A	1C601	2	40-340°F	CR	X
Primary Containment Area Radiation	Recorder	RR15755A	1C693	2	10-10E6 CPM	CR	X

#: The indicator/recorder numbers and panel numbers shown are for Unit 1. The Unit 2 numbers are the same except that a 2 appears before the sequence number instead of a 1.

TABLE 7.5-2

SAFETY RELATED DISPLAY INSTRUMENTATION
HABITABILITY (EMERGENCY OUTSIDE AIR SYSTEM/CONTROL STRUCTURE HVAC)

Parameter Measured	No. of Channels	Range	Accuracy	Type of Readout	Location	Panel No.	Power IE Bus	RPS	ESF	AS	PPD	Remarks
CS NORM OA SUPPLY DMP HDD7802A	2			LT	CR	0C681	Yes		X			
CREOASS A,B INLET DMP HDD7814A	2			LT	CR	0C681	Yes		X			
CREOASS A,B DSCH DMP HDD7811A	2			LT	CR	0C681	Yes		X			
EOASS RET AIR DMP HDD7813A	2			LT	CR	0C681	Yes		X			
CR RELIEF ISO DMP HDD7833A	2			LT	CR	0C681	Yes		X			
CREOASS AIRFLOW A/B FIC07816A	2	0-10,000 cfm	± 2%	Ind/Ctr	CR	0C681	Yes		X			
BATTERY RMS EXH SYS DMP HDD787182	4			LT	CR	0C681	Yes		X			

Note: PAM = Post Accident Monitoring; RSP = Remote Shutdown Panel; RPS = Reactor Protection System; ESF = Engineered Safety Feature; AS = Auxiliary Support; PPD = Plant Process Display

Table Rev. 56

TABLE 7.5-3

SAFETY-RELATED DISPLAY INSTRUMENTATION
CONTAINMENT AND SUPPRESSION POOL INSTRUMENTATION

Parameter Measured	No. of Channels	Range	Accuracy	Type of Readout	Location	Panel No.	Power IE Bus	RPS	ESF	AS	PAM	PPD	Remarks
Containment Hydrogen	2	0-10% 0-30%	±2%	Ind	CR	C690	Yes		X		X	X	
Containment Oxygen	2	0-10% 0-25%	±2%	Ind	CR	C690	Yes		X		X	X	0-25% Range is not calibrated
Containment O_2/H_2	2	O_2:0-10% 0-25% H_2:0-10% 0-30%	±2%	Rec	CR	C601	Yes		X		X	X	Operating History 0-25% Range is not calibrated
Drywell Temperature	2	50-350°F	±2%	Ind-Rec	CR	C693	No				X	X	Operating History
Containment Temperature	2	40-440°F	±2%	Rec	CR	C601	Yes				X		
Containment Temperature	1	0-350°F	±2%	Ind	RSP	C201	Yes					X	
Suppression Pool Water Temperature	2	30-230°F	±2%	Ind-Rec	CR	C690	Yes			X	X	X	
Suppression Pool Water Temperature	2	30-230°F	±2%	Ind	RSP	C201	Yes					X	
Suppression Pool Water Temperature	2	30-230°F	±2%	Ind	CR	C601	Yes						
Suppression Chamber Atmos Temperature	2	0-400°F	±5%	Ind-Rec	CR	C693	No					X	
Suppression Pool Air Temperature	1	0-350°F	±2%	Ind	RSP	C201	Yes					X	
Drywell Hi Accident Range Pressure	2	0-250 psig	±2%	Rec	CR	C601	Yes				X	X	Operating History

Table Rev. 56

Parameter Measured	No. of Channels	Range	Accuracy	Type of Readout	Location	Panel No.	Power IE Bus	RPS	ESF	AS	PAM	PPD	Remarks
Drywell LOCA Range Pressure	2	-14.7 to 65 psig	±2%	Rec	CR	C601	Yes				X	X	Operating History
Drywell Normal Range Pressure	1	-3 to +3 psig	±2%	Ind	CR	C601	No					X	Normal Operation
Drywell Normal Range Pressure	1	-3 to +3 psig	±2%	Ind	RSP	C201	Yes					X	Normal Operation
Suppression Chamber LOCA Range Pressure	2	-14.7 to +65 psig	±2%	Rec	CR	C601	Yes					X	Operating History
Suppression Chamber Normal Range Pressure	1	-3 to +3 psig	±2%	Ind	CR	C601	No					X	Normal Operation
Suppression Pool Level (wide range)	2	5-49 feet	±5%	Rec	CR	C601	Yes			X	X		
Suppression Pool Level (narrow range)	2	18-26.5 feet	±5%	Rec	CR	C601	Yes				X	X	Operating History
Suppression Pool Level (narrow range)	2	18-26.5 feet	±2%	Ind	CR	C601	Yes				X	X	
Suppression Pool Level (wide range)	-*	4.5-49 feet	±2%	Ind	RSP	C201	Yes			X			Remote Shutdown
Containment & Suppression Chamber Gas Sample Vlv's Inboard/Outboard Isolation Status	2	---		LT	CR	C601	Yes		X		X	X	
Containment & Suppression Chamber Nitrogen Purge Inboard/Outboard Isolation Vlv Status	2	---		LT	CR	C601	Yes		X		X	X	
Suppression Chamber Spray Flow	2	0-750 GPM	±1%	Ind	CR	C601	Yes						
Drywell Spray Flow	2	0-12000	±1%	Ind	CR	C601	Yes						

NOTE: PAM = Post Accident Monitoring; RSP = Remote Shutdown Panel; RPS = Reactor Protection System; ESF = Engineered Safety Feature; AS = Auxiliary Support; PPD = Plant Process Display

TABLE 7.5-4

SAFETY RELATED DISPLAY INSTRUMENTATION
STANDBY GAS TREATMENT SYSTEM, RX BLDG RECIRCULATION AND ISOLATION SYSTEM

Parameter Measured	No. of Channels	Range	Accuracy	Type of Readout	Location	Panel No.	Power IE Bus	RPS	ESF	AS	PPD	Remarks
RB Zone 1 Outdoor (Pressure Diff.)	2	0.2-1 in wg	±2%	Ind	CR	0C681	Yes		X			
RB Zone 2 Outdoor (Pressure Diff.)	2	0.2-1 in wg	±2%	Ind	CR	0C681	Yes		X			
RB Zone 3 Outdoor (Pressure Diff.)	2	0.2-1 in wg	±2%	Ind	CR	0C681	Yes		X			
RB Zones Outdoor (Lowest Pressure Diff.)	2	0.2-1 in wg	±2%	Ind/Ctlr	CR	0C681	Yes		X			
SGTS Unit 1 Drywell & Wetwell Damper A	1			LT	CR	1C681	Yes		X			
SGTS Unit 1 Drywell & Wetwell Damper B	1			LT	CR	1C681	Yes		X			
SGTS Unit 2 Drywell & Wetwell Damper A	1			LT	CR	2C681	Yes		X			
SGTS Unit 2 Drywell & Wetwell Damper B	1			LT	CR	2C681	Yes		X			
SGTS Flow	2	0-15,000 cfm	±2%	Ind/Ctlr	CR	0C681	Yes		X			
RB Recirc System to Zone 1 Supply A,B	2			LT	CR	1C681	Yes		X			
RB Recirc System to Zone 1 Exhaust A,B	2			LT	CR	1C681	Yes		X			
RB Recirc System to Zone 1 Equip. Compartment Exh. A,B	2			LT	CR	1C681	Yes		X			

TABLE 7.5-4

SAFETY RELATED DISPLAY INSTRUMENTATION
STANDBY GAS TREATMENT SYSTEM, RX BLDG RECIRCULATION AND ISOLATION SYSTEM

Parameter Measured	No. of Channels	Range	Accuracy	Type of Readout	Location	Panel No.	Power IE Bus	RPS	ESF	AS	PPD	Remarks
Recirc Pump A,B Motor Cooler Inlet Outboard Isol. Valve	2			LT		1C681	Yes		X			
SGTS Outdoor/Zone 1 Pressure Diff. A,B	2	0.2-1 in wg	±2%	Ind	CR	0C681	Yes		X			
SGTS Outdoor/Zone 2 Pressure Diff. A,B	2	0.2-1 in wg	±2%	Ind	CR	0C681	Yes		X			
SGTS Outdoor/Zone 3 Pressure Diff. A,B	2	0.2-1 in wg	±2%	Ind	CR	0C681	Yes		X			
SGTS Outdoor/Zones Pressure Diff. A,B	2	0.2-1 in wg	±2%	Ind/Ctlr	CR	0C681	Yes		X			
SGTS Unit 1 Drywell & Wetwell Damper A	1			LT	CR	1C681	Yes		X			
SGTS Unit 1 Drywell & Wetwell Damper B	1			LT	CR	1C681	Yes		X			
SGTS Unit 2 Drywell & Wetwell Damper A	1			LT	CR	2C681	Yes		X			
SGTS Unit 2 Drywell & Wetwell Damper B	1			LT	CR	2C681	Yes		X			
SGTS Flow	2	0-15,000 cfm	±2%	Ind/Ctlr	CR	0C681	Yes		X			
RB Recirc System to Zone 1 Supply A,B	2			LT	CR	1C681	Yes		X			
RB Recirc System to Zone 1 Exhaust A,B	2			LT	CR	1C681	Yes		X			

TABLE 7.5-4

SAFETY RELATED DISPLAY INSTRUMENTATION
STANDBY GAS TREATMENT SYSTEM, RX BLDG RECIRCULATION AND ISOLATION SYSTEM

Parameter Measured	No. of Channels	Range	Accuracy	Type of Readout	Location	Panel No.	Power IE Bus	RPS	ESF	AS	PPD	Remarks
RB Recirc System to Zone 1 Equip. Compartment Exh. A,B	2			LT	CR	1C681	Yes		X			
Recirc Pump A,B Motor Cooler Inlet Outboard Isol. Valve	2			LT		1C681	Yes		X			
Recirc Pump A,B Motor Cooler Outlet Outboard Isol. Valve	2			LT		1C681	Yes		X			
Recirc Loop A,B Incoming Line Outboard Isol. Valve	2			LT		1C681	Yes		X			
Recirc Loop A,B Outgoing Line Outboard Isol. Valve	2			LT		1C681	Yes		X			

Note: PAM = Post Accident Monitoring; RSP = Remote Shutdown Panel; RPS = Reactor Protection System; ESF = Engineered Safety Feature; AS = Auxiliary Support; PPD = Plant process Display

TABLE 7.5-5

SAFETY RELATED DISPLAY INSTRUMENTATION
EMERGENCY SERVICE WATER SYSTEM

Parameter Measured	No. of Channels	Range	Accuracy	Type of Readout	Location	Panel No.	Power IE Bus	RPS	ESF	AS	PAM	PPD	Remarks
ESW Flow Loop A/B	2	0-12,000 GPM	±2%	Ind/Rec	CR	C653	Yes			X	X		
ESW Pump AC/BD Discharge Pressure	2	0-200 psig	±2%	Ind	CR	C653	Yes			X			
ESW Pump AC/BD Discharge Temperature	2	0-200° F	±2%	Ind	CR	C653	Yes			X	X		
ESW Diesel Cooler Outlet Temperature	4	50-150° F	±2%	Ind	CR	C653	No			X			
ESW and RHRSW Total Flow A/B	2	0-30,000 GPM	±0.5%	Rec	CR	C653	No			X			
ESW Pump ABCD Status	4	---	---	LT	CR	C653	Yes			X			
ESW Diesel Cooler Inlet/Outlet Valve Status	8	---	---	LT	CR	C653	Yes			X			
Diesel Generator Room Flooded	4	---	---	LT	CR	C653	Yes			X			
ESW Structure A/B Flooded	2	---	---	Annun	CR	C653	Yes			X			
ESW Loop A/B in Service	2	---	---	LT	CR	C653	Yes			X			

Note: PAM = Post Accident Monitoring; RSP = Remote Shutdown Panel; RPS = Reactor Protection System; ESF = Engineered Safety Feature; AS = Auxiliary Support; PPD = Plant Process Display

TABLE 7.5-6

SAFETY RELATED DISPLAY INSTRUMENTATION RHR SERVICE WATER SYSTEM AND SPRAY POND

Parameter Measured	No. of Channels	Range	Accuracy	Type of Readout	Location	Panel#	Power IF Bus	RPS	ESF	AS	PAM	PPD	Remarks
RHRSW HX A Inlet Flow	1	0-12,000 GPM	±2%	Ind	CR	C601	yes			X			
RHRSW HX B Inlet Flow	1	0-12,000 GPM	±2%	Ind	CR	C601	yes			X			
RHRSW HX A Inlet Flow (Unit 2 only)	1	0-12,000 GPM	±2%	Ind	ESP	C201	yes			X			Remote Shutdown
RHRSW HX B Inlet Flow (Unit 1 only)	1	0-12,000 GPM	±2%	Ind	ESP	C201	yes			X			Remote Shutdown
RHRSW Pump A,B Status	2	---	---	LT	CR	C601	yes			X			
RHRSW HX A/B Inlet Temperature	2	0-100°F	±2%	Ind	CR	C601	no					X	
RHRSW HX A/B Inlet Vlv Position	2	0-100%	±2%	Ind	CR	C601	no			X			Status on PSP
RHRSW HX A/B Disch Vlv Status	2	---	---	LT	CR	C601	yes			X			Status on PSP
RHRSW Loop A/B Flow to Spray Pond	2	0-20,000 GPM	±.5%	Rec	CR	C653	no						
RHRSW Pump A/B Disch Pressure	2	0-200 PSIG	±2%	Ind	CR	C601	no					X	
RHRSW Crosstie A/B to RHR Vlv Status	4	---	---	LT	CR	C601	yes			X		X	
ESS Spray Pond Inlet Vlv Loop A/B Status	2	---	---	LT	CR	C653	yes			X			
ESS Spray Pond Bypass Vlv Loop A/B Status	2	---	---	LT	CR	C653	yes			X			
ESS Spray Pond Temperature	4	25-125°F	±2%	Ind	CR	C653	no					X	Selective Channels

Notes:PAM = Post Accident Monitoring; RSP = Remote Shutdown Panel; RPS = Engineered Safety Feature; AS = Auxiliary Support; PPD = Plant Process Display

TABLE 7.5-7

SAFETY RELATED DISPLAY INSTRUMENTATION CONTAINMENT INSTRUMENT GAS SYSTEM

Parameter Measured	No. of Channels	Range	Accuracy	Type of Readout	Location	Panel No.	Power IE Bus	RPS	ESF	AS	PAM	PPD	Remarks
Instrument Gas Pressure to Main Steam Relief Valve	1	0-200 psig	±2%	Ind	CR	C601	No			X			
Instrument Gas Supply Pressure	1	0-100 psig	±2%	Ind	CR	C601	No			X			
Instrument Gas Bottle Pressure Indication (Unit 2 only)	2	0-3000 psig	±2%	Ind	CR	C601	Yes			X	X		Computer Input
Instrument Gas Bottles Isol Vlv Status	2	---	---	LT	CR	C601	Yes			X			*)
Instrument Gas Suction IB/OB Isol Vlv Status	2	---	---	LT	CR	C601	Yes			X			*)
Instrument Gas Containment IB/OB Isol Vlv Status	9	---	---	LT	CR	C601	Yes			X			*)

Note: PAM = Post Accident Monitoring; RSP = Remote Shutdown Panel; RPS = Reactor Protection System; ESF = Engineered Safety Feature; AS = Auxiliary Support; PPD = Plant Process Display

TABLE 7.5-7a

SAFETY-RELATED DISPLAY INSTRUMENTATION
STANDBY LIQUID CONTROL SYSTEM

Parameter Measured	No. of Channels	Range	Accuracy	Type of Readout	Location	Panel No.	Power IE Bus	RPS	ESF	AS	PAM	PPD	Remarks
SLCS Flow	1	0-100 GPM	±2%	Indicator	14806 CR	C601	Yes				X		
SLCS Storage Tank Level	1	0-5000 Gal	±2%	Indicator	14806 CR	C601	Yes				X		

TABLE 7.5-8

BYPASS INDICATION FOR NON-NSSS SYSTEMS

Bypassed System Indication	Bypassed Component Indication
ESW, Loop A Out-of-Service	ESW Pump 0P-504A Power Loss ESW Pump 0P-504C Power Loss ESW Pump Cooling Fans A/C Disabled
ESW, Loop B Out-of-Service	ESW Pump 0P-504B Power Loss ESW Pump 0P-504D Power Loss ESW Pump Cooling Fans B/D Disabled
Diesel-Gen. A(B,C,D) Control System Out-of-Service	DG A(B,C,D) DC Control Power Loss DG A(B,C,D) Field Flash and Excitation Control Power Loss DG A(B,C,D) Auto Control Unavailable DG A(B,C,D) Cooling Fans Disabled 4 Kv Bus 1AXFMR101CRT Breaker Disabled
Diesel-Gen. A(B,C,D) Output System Out-of-Service	DG A(B,C,D) Breaker Racked Out DG A(B,C,D) Control Power Loss 4 Kv Bus 1A XFMR 201CRT Breaker Disabled
Diesel-Gen. A(B,C,D) Aux. System Out-of-Service	DG A(B,C,D) Aux. Supply/Control Power Loss DG A(B,C,D) Aux. System Not in Auto Oil Pump 0P-514A(B,C,D) Disabled
Control Room Habitability System Div. I Out-of-Service	Fan 0V-101A Disabled Fan 0V-103A Disabled Fan 0V-115A Disabled Fan 0V-117A Disabled Chilled Water Disabled
NOTE: Whenever Diesel Generator 'E' is aligned for Diesel Generator A, B, C, or D, the Diesel Generator 'E' Bypass Indications are transferred into the Bypass Indication System in place of the substituted diesel generator.	
Control Room Habitability System Div. II Out-of-Service	Fan 0V-101B Disabled Fan 0V-103B Disabled Fan 0V-115B Disabled Fan 0V-117B Disabled Chilled Water Disabled
Standby Gas Treatment System Div. I Out-of-Service	Fan 0V-109A Disabled Fan 0V-118A Disabled Fan 0V-144A Disabled Fan 0V-201A Disabled

TABLE 7.5-8

BYPASS INDICATION FOR NON-NSSS SYSTEMS

Bypassed System Indication	Bypassed Component Indication
Standby Gas Treatment System Div. II Out-of-Service	Fan 0V-109B Disabled Fan 0V-118B Disabled Fan 0V-144B Disabled Fan 0V-201B Disabled
Battery Room Exhaust Div. I Out-of-Service	Fan 0V-116A Disabled
Battery Room Exhaust, Div. II Out-of-Service	Fan 0V-116B Disabled
RHR Service Water Loop A Out-of-Service	Pump 1P-506A Power Loss Heat Exchanger Valve Control Power Loss Fan 1V-506A Disabled Control Power Loss for Spray Pond Network Valves Spray Pond Drain Valves Power Loss / Not In Auto
RHR Service Water Loop B Out-of-Service	Pump 1P-506B Power Loss Heat Exchanger Valve Control Power Loss Fan 1V-506B Disabled Control Power Loss for Spray Pond Network Valves Spray Pond Drain Valves Power Loss / Not In Auto
Remote Shutdown Panel Div. I Switches in Emergency Position	Remote Shutdown Panel Div. I Switches in Emergency Position
Remote Shutdown Panel Div. II Switches in Emergency Position	Remote Shutdown Panel Div. II Switches in Emergency Position
Containment Instrument Gas System Div. II Out-of-Service	Nitrogen Supply HV-12648 Open Nitrogen Supply HV-12643 Open
Containment H_2 Recombiner Div. I Out-of-Service	Recombiner 1E-440A Power Loss Recombiner 1E-440C Power Loss
Containment H_2 Recombiner Div. II Out-of-Service	Recombiner 1E-440B Power Loss Recombiner 1E-440D Power Loss

TABLE 7.5-8

BYPASS INDICATION FOR NON-NSSS SYSTEMS

Bypassed System Indication	Bypassed Component Indication
Containment Isolation System Div. I Out-of-Service	Loss of Control Power for Motorized Valves (Div. I) Containment Atmos Purge ISO Bypass
Containment Isolation System Div. II Out-of-Service	Loss of Control Power for Motorized Valves (Div. II) Containment Atmos Purge ISO Bypass
	Unit 1 Unit 2
Drywell Ventilation System Div. I Out-of-Service	Fan 1V-414A / 2V414A Disabled Fan 1V-418A / 2V415A Disabled Fan 1V-416A / 2V416A Disabled
Drywell Ventilation System Div. II Out-of-Service	Fan 1V-414B / 2V414B Disabled Fan 1V-418B / 2V415B Disabled Fan 1V-416B / 2V416B Disabled
Reactor Building Emerg. Switchgear and LCC Cooling Div. I Out-of-Service	Fan 1V-222A Disabled
Reactor Building Emerg. Switchgear and LCC Cooling Div. II Out-of-Service	Fan 1V-222B Disabled
Control Structure HVAC Train 'A' Alternate Control Switches in Emergency Position	CSHVAC Alternate Control Panel Switches in Emergency Position

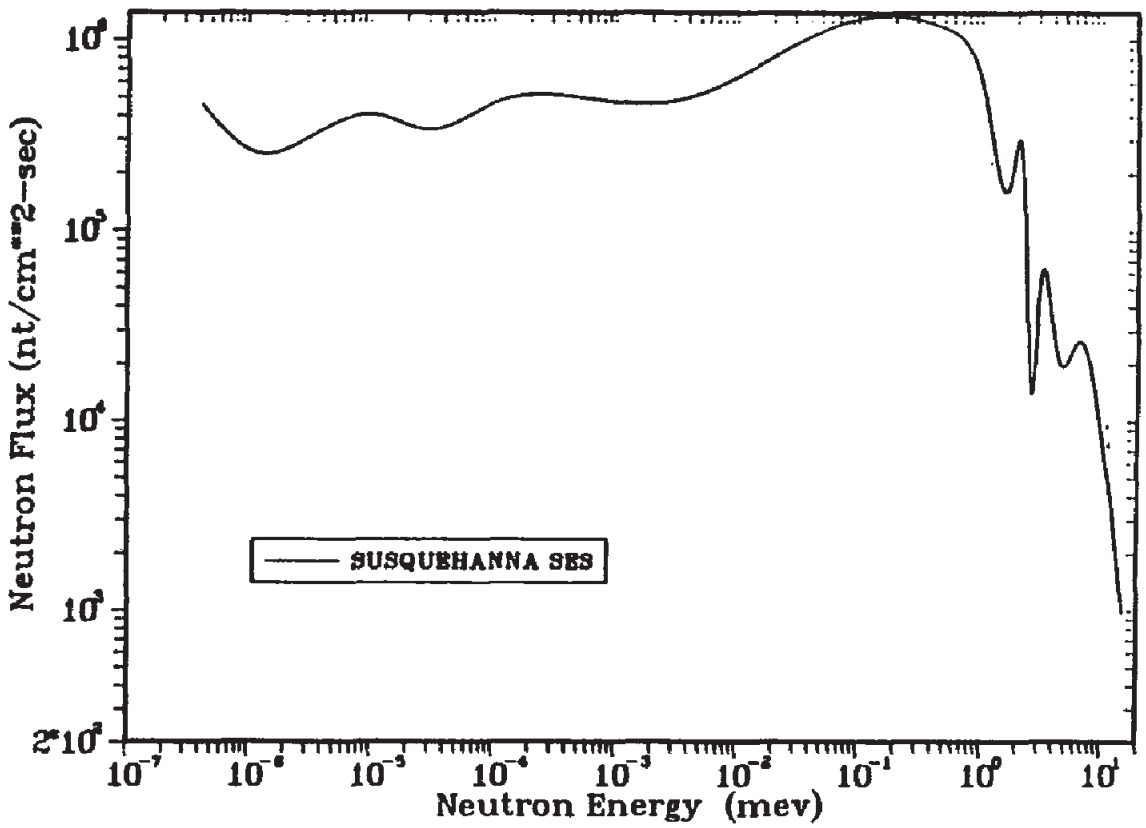

FSAR REV.65

SUSQUEHANNA STEAM ELECTRIC STATION
UNITS 1 & 2
FINAL SAFETY ANALYSIS REPORT

NEUTRON FLUX AT
PRIMARY FIELD

FIGURE 7.5-3, Rev 49

AutoCAD: Figure Fsar 7_5_3.dwg

7.6 ALL OTHER INSTRUMENTATION SYSTEMS REQUIRED FOR SAFETY

7.6.1a DESCRIPTION

This section will examine and discuss the instrumentation and control aspects of the following NSSS systems:

(1) Process Radiation Monitoring System (NSSS)

(2) High Pressure/Low Pressure Systems Interlock Protection System

(3) NSSS Leak Detection System

(4) Neutron Monitoring System (NMS)

(5) Recirculation Pump Trip System (RPT)

The following are relevant to the evaluation of the instrumentation and control portions of the subject systems.

(1) The systems themselves and their I&C portion serve design bases that are both safety and power generation.

(2) Many systems inherently perform mechanical or containment safety functions but need little I&C protective support.

(3) Many systems provide protective functions in selective minor events and are not required for other major plant occurrence.

(4) Several systems perform safety functions with other parallel and complementary systems in a network protective manner and as such the network, not the individual system, is to be evaluated for redundancy, diversity, and separation considerations.

(5) Several systems have only a small portion of their I&C participating in safety functions.

(6) Most of the I&C systems described in this section are an integral part of the total system function described in other sections.

(7) A system level discussion of the safety aspects is presented in Appendix 15A.

7.6.1a.1 Refueling Interlocks System-Instrumentation and Controls

See Subsection 7.7.1.10.

7.6.1a.2 NSSS Process Radiation Monitoring System - Instrumentation and Controls

A number of radiation monitors and monitoring subsystems are required for safe shutdown of the plant.

Of these the NSSS uses only the main steamline radiation monitoring subsystem. The others are used in the non-NSSS systems and are described in Subsection 7.6.1b.2.

7.6.1a.3 High Pressure/Low Pressure Systems Interlock Protection System

7.6.1a.3.1 Function Identification

The low pressure systems which interface with the RCPB and the instrumentation which protects them from overpressurization are discussed in this section.

7.6.1a.3.2 Power Sources

The power for the interlocks is provided from the essential power supplies for the associated systems, (RHR for the RHR valves and CS for the CS valves).

7.6.1a.3.3 Equipment Design

The following high pressure/low pressure interlock equipment is provided:

Process Line Instrumentation	Type	Valve	Parameter Sensed	Purpose
RHRS Shutdown Supply	MO MO	E11-F009 E11-F008	Reactor Pressure	Closes on high pressure and prevents opening until reactor pressure is low
RHRS Shutdown Return & LPCI	Check MO	E11-F050 E11-F015	NA Reactor Pressure	NA Maintains valve closed and/or prevents opening until reactor pressure is low
Injection	MO	E11-F017	Reactor Pressure	
RHRS Head Spray	Check MO	E11-F019 E11-F023	NA Reactor Pressure	NA Closes on high pressure and prevents opening until reactor pressure is low
	MO	E11-F022	Reactor Pressure	
CS System Injection	Check MO	E21-F006 E21-F004	NA Reactor Pressure	NA Prevents valves from opening until reactor pressure is low
	MO	E21-F005	Reactor Pressure	

7.6.1a.3.3.1 Circuit Description

At least two valves are provided in series in each of these lines. The RHR shutdown supply valves, the inboard RHR shutdown return valves (when in the shutdown mode) and the RHR head spray valves are all controlled by independent and diverse interlocks to prevent the valves from being opened when the primary system pressure is above the subsystem design pressure.

The RHR system head spray and shutdown supply valves are interlocked to prevent valve opening, whenever the primary pressure is above the subsystem design pressure, and automatically close whenever the primary system pressure exceeds the subsystem design pressure.

The LPCI injection valves E11-F015 and E11-017 and the Core Spray system injection valves E21-F004 and F005 are interlocked with a reactor pressure low signal which protects the systems from overpressurization by not allowing these valves to open until reactor pressure is below the system design pressure. E11-F015 is a fast opening valve and E11-F017 is a throttling valve.

7.6.1a.3.3.2 Logic and Sequencing

There is no logic as such, for the sensor inputs operate the interlocks without logic combination.

7.6.1a.3.3.3 Bypasses and Interlocks

There are no bypasses in the high pressure/low pressure interlocks. However, either of the two series motor operated valves can be opened for test if the other is closed.

7.6.1a.3.3.4 Redundancy

Each process line has two valves in series which are redundant in assuring the interlock. The RHR shutdown supply valves, the inboard RHR shutdown return valves (when in the shutdown mode) and the RHR head spray valves are all controlled by independent interlocks which close the valves and/or prevent the valves from being opened when the primary system pressure is above the subsystem design pressure.

7.6.1a.3.3.5 Actuated Devices

The motor operated valves and air operated valve listed in Subsection 7.6.1a.3.3 are the actuated devices.

7.6.1a.3.3.6 Separation

Separation is maintained in the instrumentation portion of the high pressure/low pressure interlocks by assigning the signals for the electrically controlled valves to ECCS separation divisions. The sensors and cabling are in separate ECCS divisions.

7.6.1a.3.3.7 Testability

The actuated devices cannot be tested during reactor operation but are verified during startup and shutdown. The sensors can be tested during reactor operation in the same manner that the ECCS sensor are tested. Refer to Subsection 7.3.1.1a.3.9 for a discussion of typical ECCS testing.

7.6.1a.3.4 Environmental Considerations

The instrumentation and controls for the high pressure/low pressure interlocks are qualified as Class 1E equipment. The sensors are mounted on local instrument panels and the control circuitry is housed in panels in the control structure, and are qualified for these environmental conditions. See Section 3.11 for discussion.

7.6.1a.3.5 Operational Considerations

7.6.1a.3.5.1 General Information

The high pressure/low pressure interlocks are strictly automatic. There is no manual actuation capability. If the operator initiates operation of a low pressure system, the interlocks will prevent exposure to the high pressure.

7.6.1a.3.5.2 Reactor Operator Information

The status of each valve providing the high pressure/low pressure boundary is indicated in the control room with the exception of the head spray check valve.

7.6.1a.3.5.3 Setpoints

Refer to the Technical Requirements Manual for safety trip setpoints and the plant Technical Specifications for the Allowable Values.

7.6.1a.4 NSSS Leak Detection System-Instrumentation and Controls

The NSSS Leak Detection System consists of the following subsystems:

(1) Main Steamline Leak Detection
(2) RCIC System Leak Detection
(3) Recirculation Pump Leak Detection
(4) RHR System Leak Detection
(5) Reactor Water Cleanup System Leak Detection
(6) Safety/Relief Valve Leak Detection
(7) Reactor Vessel Head Leak Detection
(8) HPCI System Leak Detection

7.6.1a.4.1 System Identification

This section discusses the instrumentation and controls associated with the leak detection system. The system itself is discussed in Subsection 5.2.5.

The purpose of the leak detection system instrumentation and controls is to detect leakage from the reactor coolant pressure boundary before predetermined limits are exceeded and provide the signals necessary to generate an alarm and/or to isolate leakage. Safety and seismic classifications for the Leak Detection Systems are discussed in Sections 3.10 and 3.11.

7.6.1a.4.2 Power Sources

Power Separation is applicable to leak detection signals that are associated with the isolation valve systems. For further discussion, refer to Subsection 7.3.1.1a.2.

7.6.1a.4.3 Equipment Design

7.6.1a.4.3.1 General

The systems or parts of systems which contain water or steam coming from the reactor vessel or supply water to the reactor vessel, and which are in direct communication with the reactor vessel, are provided with leakage detection systems.

The main steamlines within the steam tunnel inside the containment are monitored by temperature detectors within the tunnel.

Outside the drywell, the piping within each system monitored for leakage is in compartments or rooms separate from other systems wherever feasible so that leakage may be detected in drains, by area temperature indications, or high process flow.

7.6.1a.4.3.2 Main Steamline Leak Detection

The Main Steamline Leak Detection subsystem is discussed in Subsection 7.3.1.1a.2.4.1.12.

7.6.1a.4.3.3 RCIC System Leak Detection

7.6.1a.4.3.3.1 Subsystem Identification

The steamlines of the RCIC system are constantly monitored for leaks by the leak detection system. Leaks from the RCIC will cause a change in at least one of the following monitored operating parameters: area temperature, steam pressure, or steam flow rate. If the monitored parameters indicate that a leak may exist, the detection system responds by activating an annunciator and initiating a RCIC isolation trip logic signal.

The RCIC leak detection subsystem consists of three types of monitoring circuits. The first of these monitors ambient and differential temperature, triggering an annunciator when the temperature rises above a preset maximum. Note that the high differential temperature isolation and isolation alarm function have been removed but the above equipment is still located in the field and the pre-isolation alarm is still functional. The second type of circuit utilized by the leak detection system monitors the flow rate (differential pressure) through the steamline, triggering an annunciator when the differential pressure rises above a preset maximum. The third type of circuit utilized by the leak detection system monitors the steamline pressure upstream of the differential pressure element and also is annunciated. Alarm outputs from all three circuits are also used to generate the RCIC auto-isolation signal. For instrument safety trip setpoints, refer to the Technical Requirements Manual, and the plant Technical Specifications for the Allowable Values.

7.6.1a.4.3.3.2 RCIC Area Temperature Monitoring

7.6.1a.4.3.3.2.1 Circuit Description

The area temperature monitoring circuit is similar to the one described for the HPCI area temperature monitoring system. (See Subsection 7.6.1a.4.3.8.2.)

7.6.1a.4.3.3.2.2 Logic and Sequencing

Using one-out-of-two logic, the RCIC area temperature monitoring circuit activates an annunciator and initiates a RCIC isolation signal when the temperature rises above a preset limit.

7.6.1a.4.3.3.2.3 Bypasses and Interlocks

A bypass/test switch is provided in each logic for the purpose of testing the temperature monitor without initiating RCIC system isolation.

Placing the keyswitch in Bypass position in one division will not prevent operation of the temperature monitor in the opposite division when required for RCIC system isolation. No interlocks are provided from this subsystem.

7.6.1a.4.3.3.2.4 Redundancy and Diversity

Two physically and electrically independent channels of leak detection are supplied to those systems designed to isolate upon receipt of the leak detection signal(s) and required to meet the single failure and redundancy criteria.

7.6.1a.4.3.3.3 RCIC Steamline Pressure Monitoring

7.6.1a.4.3.3.3.1 Circuit Description

Steamline pressure to the RCIC turbine is monitored to detect gross system leaks that may occur upstream of the dP element (elbow), causing the line pressure to drop to an abnormally low level. This line pressure is monitored by the pressure sensors (see Subsection 7.4.1.1.3.6).

7.6.1a.4.3.3.3.2 Logic and Sequencing

Pressure sensors using two-out-of-two logic detect abnormal low steamline pressure and initiate RCIC isolation signal.

7.6.1a.4.3.3.3.3 Bypasses and Interlocks

No bypass or interlock provided.

7.6.1a.4.3.3.3.4 Redundancy and Diversity

Redundancy is provided by redundant pressure sensors. No diverse method is employed to detect gross system leaks upstream of the elbow.

7.6.1a.4.3.3.4 RCIC Flow Rate Monitoring

7.6.1a.4.3.3.4.1 Circuit Description

The steamline from the nuclear boiler to the RCIC turbine is instrumented with two differential pressure switches, one connected across each of two elbows in the line. The steam flow rate through the line is monitored by the switches, and a trip (isolation) occurs when leakage creates a steam line high flow condition. A time delay is incorporated to prevent inadvertent isolation. RCIC isolation is discussed in Subsection 7.4.1.1.3.6.

7.6.1a.4.3.3.4.2 Logic and Sequencing

Redundant instrumentation consists of one differential pressure switch in each logic, sensing high flow through the RCIC inlet steam line.

Since isolation of the RCIC system is accomplished by independent actuation of either logic, a single failure of a system component in either logic will not prevent the required isolation function. A 3 sec. time delay in each logic division prevents inadvertent system isolations due to pressure spikes.

7.6.1a.4.3.3.4.3 Bypass and Interlocks

No bypasses or interlocks are provided.

7.6.1a.4.3.3.4.4 Redundancy and Diversity

Isolation of the RCIC system is accomplished using two separate logics, each feeding their respective inboard and outboard isolation valves. Each logic incorporates a single channel of RCIC high steam flow monitoring instrumentation.

7.6.1a.4.3.4 Recirculation Pump Leak Detection

7.6.1a.4.3.4.1 Subsystem Identification

The purpose of the recirculation pump leak detection subsystem is to monitor the rate of coolant seepage or leakage past the pump shaft seals. Excessively high rates of coolant flow past the seal will result in annunciator activation.

There are two recirculation pump leak detection systems, one for each of the pumps in the recirculation loop. The recirculation pump leak detection system consists of two types of monitoring circuits, (Figure 7.6-1). The first of these monitors the pressure levels within the seal cavities, presenting the plant operator with a visual display of the sensed pressure in each of the two cavities. The second type of monitoring circuit utilized by the leak detection system monitors the rate of liquid flow from the seal cavities.

7.6.1a.4.3.4.2 Pump Seal Cavity Pressure Monitoring

7.6.1a.4.3.4.2.1 Circuit Description

The pressure levels within seal cavity No. 1 and seal cavity No. 2 are measured with identical instruments arranged similarly. Only one circuit, seal cavity No. 1 pressure monitoring, will be discussed. The pressure within seal cavity No. 1 is measured using a pressure transmitter. The pressure transmitter, produces an output signal whose magnitude is proportional to the sensed pressure within its dynamic range. This output signal is then applied to pressure indicators for plant operator readout.

7.6.1a.4.3.4.2.2 Logic and Sequencing

No action is initiated by the pump seal cavity pressure monitoring circuit.

7.6.1a.4.3.4.2.3 Bypasses and Interlocks

No bypass and interlocks are provided.

7.6.1a.4.3.4.2.4 Redundancy and Diversity

No redundancy is provided in this monitoring circuit. The pump seal cavity pressure monitoring is a diverse method of leak detection to the seal cavity flow rate monitoring.

7.6.1a.4.3.4.3 Liquid Flow Rate Monitoring

7.6.1a.4.3.4.3.1 Circuit Description

All condensate flowing past the recirculation pump seal packings and into the seal cavities is collected and sent by one of two drain systems to the drywell equipment sump for disposal. The first drain system drains the major portion of the condensate collected within the No. 2 seal cavity. The condensate flow rate through the drain system is measured (high/low) by a flow switch. The point at which the microswitch closes can be adjusted so that switch actuation occurs only above or below certain flow rates.

Excessively high or low flow rates through this drain system will activate an annunciator in the main control room.

The second drain system drains the cavity beyond the No. 2 seal cavity collecting the condensate that has seeped (or leaked) past the outer seal. The condensate flow rate through this drain system is also measured (high), using a flow switch. The physical construction of this switch is similar to the flow switch described above, with only one contact set used to indicate the high flow rate. A high flow rate through this system will activate an annunciator in the main control room.

7.6.1a.4.3.4.3.2 Logic and Sequencing

7.6.1a.4.3.4.3.3 Bypasses and Interlocks

The function of the pressure and flow rate instrumentation is to provide indication and annunciation. There are no bypasses or interlocks associated with this subsystem.

7.6.1a.4.3.4.3.4 Redundancy and Diversity

Redundant pressure and flow sensing instrumentation for detecting shaft seal leakage is not provided since the function of this instrumentation is to provide indication and annunciation. Backup indication of seal leakage is provided, however, by monitoring both seal cavities to allow verification of seal failure. Excessive shaft seal leakage is collected by the drywell equipment sump.

7.6.1a.4.3.5 RHR System Leak Detection

7.6.1a.4.3.5.1 Subsystem Identification

The shutdown cooling suction line of the RHR system is constantly monitored for leaks by the leak detection system. Leaks from the RHR shutdown cooling system are detected by ambient and differential temperature monitoring, flow rate and water level on the floor of the RHR Pump Rooms. If the monitored parameters indicate a leak may exist the detection system activates an annunciator alarm. If high flow is detected, the system generates an isolation trip signal

7.6.1a.4.3.5.2 RHR Area Temperature Monitoring

7.6.1a.4.3.5.2.1 Circuit Description

Four ambient temperature and four differential temperature sensing circuits monitor the RHR Pump Rooms. Two circuits of each type are installed in each room. The circuits for Pump Room “A” are in electrical division I and the circuits for Pump Room “B” are in electrical division II.

7.6.1a.4.3.5.2.2 Logic and Sequencing

Using one-out-of-two logic, the RHR area temperature monitor activates an annunciator when the observed temperature exceeds a preset limit.

7.6.1a.4.3.5.2.3 Bypasses and Interlocks

No bypasses or interlocks are associated with this subsystem.

7.6.1a.4.3.5.2.4 Redundancy and Diversity

Dual channels of ambient and differential temperature monitoring are provided for leak detection in the RHR system equipment area for each of the two logic trains. A single failure of a system component in either train will not prevent the required alarm.

7.6.1a.4.3.5.3 RHR Flow Rate Monitoring

RHR Flow Rate Monitoring is discussed in subsection 7.3.1.1a.2.4.1.14. [Unit 1 only]

7.6.1a.4.3.5.3.1 Circuit Description [Unit 2 only]

Flow rate monitoring is provided on the RHR shutdown cooling suction line.

Flow rates in excess of the predetermined maximum are indicative of a line leak or break, and will generate differential pressure heads of sufficient magnitude to cause dPIS actuation and provide automatic closure of RHR inboard and outboard isolation valves.

7.6.1a.4.3.5.3.2 Logic and Sequencing [Unit 2 only]

Using one-out-of-one logic for each isolation valve, the flow rate monitoring circuit initiates a signal to isolate RHR inboard and outboard isolation valves when flow rate exceeds a preset limit.

7.6.1a.4.3.5.3.3 Bypasses and Interlocks [Unit 2 only]

There are no bypasses or interlocks in this system.

7.6.1a.4.3.5.3.4 Redundancy and Diversity [Unit 2 only]

Flow monitoring in the shutdown cooling return line utilizes two differential pressure switches, one for each logic. In both cases, RHR isolation is accomplished by independent actuation of either logic; consequently, a single failure in either logic will not prevent the required isolation function.

7.6.1a.4.3.5.4 This section has been deleted

7.6.1a.4.3.5.5 RHR Pump Room Flood (Water Level) Detection [Unit 1 only]

The RHR Pump Room is equipped with level switches to detect and alarm for water level on the floor of the room. The level switches will detect leakage of water from all portions of the RHR system in the Pump Rooms. One switch is installed in each of the two Pump Rooms and will initiate an alarm in the control room if the high level setpoint is reached.

7.6.1a.4.3.6 Reactor Water Clean-up System Leak Detection

See Subsection 7.3.1.1a.2.4.1.9.

7.6.1a.4.3.7 Safety/Relief Valve Leak Detection

7.6.1a.4.3.7.1 Subsystem Identification

Normally, the safety/relief valves are in the shut tight condition and are all at about the same temperature. Steam passage through the valve will elevate the sensed temperature at the exhaust, causing an "abnormal" temperature reading on the recorder. Switch contacts on the recorder, adjusted to actuate at a predetermined setpoint, close to complete an annunciator circuit. Safety valve operation usually occurs only after relief valve actuation. Leakage from a valve is usually characterized by a temperature increase on a single input. As discussed in Subsection 18.1.24.3, each of the sixteen safety/relief valves are provided with an acoustic monitoring system to detect flow through the valve.

7.6.1a.4.3.7.2 Safety/Relief Valve Discharge Line Temperature Monitoring

7.6.1a.4.3.7.2.1 Description

A temperature element (sensor) is placed in the discharge pipe of each of the sixteen (16) safety/relief valves for remote indication of leakage. The outputs of the temperature elements are sequentially sampled and recorded by one common temperature recorder. Each temperature element is compared against a setpoint value which if exceeded will be annunciated by one common annunciator. Thus, when the annunciator sounds, it is possible to ascertain which specific valve(s) may be leaking by observing the recorder printout.

7.6.1a.4.3.7.2.2 Logic and Sequencing

No action is initiated by the safety/relief valve temperature monitoring circuit.

7.6.1a.4.3.7.2.3 Bypasses and Interlocks

There are no bypasses or interlocks associated with this subsystem.

7.6.1a.4.3.7.2.4 Redundancy and Diversity

No redundancy or diversity is required for this system.

7.6.1a.4.3.8 HPCI System Leakage Detecting

7.6.1a.4.3.8.1 Subsystem Identification

The steamline of the high pressure coolant injection (HPCI) system are constantly monitored for leaks by the leak detection system. Leaks from the HPCI steamline will cause a change in at least one of the following monitored operating parameters: sensed area temperature, steam pressure, or steam flow rate. If the monitored parameters indicate that a leak may exist, the detection system responds by activating an alarm and depending upon the activating parameter, initiates HPCI auto-isolation action.

The HPCI leakage detection system consists of three types of monitoring circuits. The first of these monitors area ambient temperature, triggering the alarm circuit when the temperature rises above the preset maximum. The second type of circuit utilized by the leakage detection system monitors the flow rate, or differential pressure, through the steam line, triggering an alarm circuit when the flow rate exceeds a preset maximum. The third type of circuit utilized by the HPCI leakage detection system monitors the steam line pressure upstream of the differential pressure element. Alarm outputs from all three circuits are also used to generate the HPCI auto-isolation signal. The ambient temperature monitoring is similar to that described in main steamline leakage detection system. Note that the high differential temperature isolation and isolation alarm function have been removed but the above equipment is still located in the field. The pre-isolation alarm function is still an active alarm.

7.6.1a.4.3.8.2 HPCI Area Temperature Monitoring

7.6.1a.4.3.8.2.1 Circuit Description

The HPCI area and tunnel ambient and differential temperature sensing elements are thermocouples. Note that the high differential temperature isolation and isolation alarm function have been removed but the above equipment is still located in the field. Their outputs go to temperature switches set to activate at a preset temperature. Closing the temperature switches will light the point module alarm indicator and sound the high temperature alarm in the main control room. In addition, activation of the tunnel temperature switches will start the timer, which after a suitable delay period, initiates HPCI isolation valve closure. If at any time during the timing cycle, the temperature switch contacts are opened, the timer will automatically reset and no isolation valve closure will result. Before timer timeout, the operator can initiate isolation by depressing pushbutton switch HPCI ISOLATE. This action will bypass the timer circuits and, providing no logic test is in progress, the HPCI isolation valves will close.

HPCI equipment area ambient temperatures are monitored by local and emergency area cooler inlet temperature sensors.

High ambient temperature from the HPCI area initiates isolation valve closure.

The HPCI isolation valves do not receive an isolation signal for approximately one (1) second following actuation of either HPCI area temperature monitoring system or the tunnel temperature monitoring system. This time delay prevents false isolation signals from being sent to HPCI logic every time the temperature switches are energized.

7.6.1a.4.3.8.2.2 Logic and Sequencing

The two division HPCI temperature monitors work on a one out of two logic that initiates the isolation logic. There are five temperature monitors per division which consist of three area (two ambient and one differential) and two tunnel (one ambient and one differential) temperature monitors. The tunnel temperature signals are time delayed before initiating the isolation logic. Note that the high differential temperature isolation and isolation alarm function have been removed but the above equipment is still located in the field.

7.6.1a.4.3.8.2.3 Bypasses and Interlocks

A bypass/test switch is provided in each logic division for the purpose of testing the HPCI logic without initiating HPCI system isolation. Placing the keyswitch in Bypass position in one division will not prevent operation of the temperature monitor in the opposite division when required for HPCI system isolation. No interlocks are provided from this subsystem. Note that the high differential temperature isolation and isolation alarm function have been removed but the above equipment is still located in the field.

7.6.1a.4.3.8.2.4 Redundancy and Diversity

There are two independent HPCI leakage detection divisions. The HPCI area ambient temperature monitoring is a diverse method of HPCI leak detection to the HPCI steam line pressure and flow rate (differential pressure) monitoring.

7.6.1a.4.3.8.3 HPCI Steam Flow Monitoring

7.6.1a.4.3.8.3.1 Description

The steamline from the nuclear boiler leading to the HPCI turbine is instrumented so that the steam flow rate through it, and its pressure, can be monitored and used to indicate the presence of a leak or break. In the presence of a leak, the HPCI system responds by operating the auto-isolation signal. This portion of the discussion on HPCI system leakage detection is limited to the flow rate instrumentation and does not cover the system isolation procedures. Steam flowing through the steam line will develop a differential pressure head across the elbow located inside the primary containment. The magnitude of the head proportional to the square of the flow rate is measure by a dPIS. Flow rates in excess of the predetermined maximum indicative of a line leak or break will generate differential pressure heads of sufficient magnitude to cause a dPIS actuation. Actuation occurs following a preset time delay to prevent inadvertent isolation. HPCI isolation is discussed in Subsection 7.3.1.1a.1.3.7.

7.6.1a.4.3.8.3.2 Logic and Sequencing

Using one-out-of-two logic, the HPCI steam flow monitoring circuit initiates a HPCI isolation signal when the flow rate exceeds a preset limit.

7.6.1a.4.3.8.3.3 Bypasses and Interlocks

See paragraph 7.6.1a.4.3.8.2.3.

7.6.1a.4.3.8.3.4 Redundancy and Diversity

There are two independent HPCI leakage detection channels.

7.6.1a.4.3.8.4 HPCI Steamline Pressure Monitoring

7.6.1a.4.3.8.4.1 Circuit Description

Steamline pressure to the HPCI turbine is monitored to detect gross system leaks that may occur upstream of the dP element, causing the line pressure to drop to an abnormally low level. Line pressure is monitored by pressure switches, actuating on low pressure to also generate the auto-isolation signal.

7.6.1a.4.3.8.4.2 Logic and Sequencing

Using two-out-of-two logic, the HPCI steamline pressure monitoring circuit initiates a HPCI isolation signal when the pressure falls below a preset limit.

7.6.1a.4.3.8.4.3 Bypasses and Interlocks

See Subsection 7.6.1a.4.3.8.2.3 for discussion.

7.6.1a.4.3.8.4.4 Redundancy and Diversity

There are two independent HPCI leakage detection channels.

7.6.1a.4.4 System and Subsystem Separation Criteria

See Section 3.12 for discussion on separation.

7.6.1a.4.5 System and Subsystem Testability

The proper operation of the sensor and the logic associated with the leak detection systems is verified during the leak detection system preoperational test and, during inspection tests that are provided for the various components during plant operation. Each temperature switch, both ambient and differential types, is connected to dual thermocouple elements.

Each temperature switch contains a trip light which lights when the temperature exceeds the setpoint. In addition, keylock test switches are provided so that logic can be tested without sending an isolation signal to the system involved. Thus, a complete system check can be confirmed by checking activation of the isolation relay associated with each switch.

RWCU differential flow leak detection alarm units are tested by inputting a voltage signal to simulate a high differential flow. Alarm and indicator lights monitor the status of the trip circuit.

Testing of flow, reactor vessel level, and pressure leak detection equipment is described in Subsections 7.3.1.1a.1, and 7.3.1.1a.2.

7.6.1a.4.6 System and Subsystem Environmental Considerations

The sensors, wiring, and electronics of the leak detection system which are associated with the isolation valve logic are designed to withstand the envelope conditions that follow a LOCA (see Section 3.11).

All portions of the leak detection system which provide for isolation of other systems or portions of systems are environmentally qualified to meet the requirements for Class I electrical equipment (see Section 3.11).

7.6.1a.4.7 System and Subsystem Operational Considerations

The operator is kept aware of the status of the leak detection system through meters and recorders which indicate the measured variables in the control room. If a trip occurs, the condition is continuously annunciated in the main control room.

Leak detection system bypass switches are provided on a backrow panel in the main control room to allow bypassing of certain trip functions during testing.

The operator can manually operate valves which are affected by the leak detection system during normal operation. When a trip conditions exists, the isolation logic must be reset before further manual valve operations can be performed. Manual reset switches are provided in the main control room.

There is no vital supporting system which supplies direct support for the leak detection systems.

7.6.1a.5 Neutron Monitoring System-Instrumentation and Controls

The neutron monitoring system consists of seven major subsystems:

(1) Source range monitor subsystem (SRM),

(2) Intermediate range monitor subsystem (IRM),

(3) Local power range monitor subsystem (LPRM),

(4) Average power range monitor subsystem (APRM),

(5) Rod block monitor subsystem (RBM), and
(6) Traversing in-core probe subsystem (TIP).

(7) Oscillation Power Range Monitor Subsystem (OPRM)

7.6.1a.5.1 System Identification

The purpose of this system is to monitor the power in the core and provide signals to the RPS and the rod block portion of the reactor manual control system. It also provides information for operation and control of the reactor and for post-accident conditions.

The IRM, OPRM and APRM subsystems provide a safety function, and have been designed to meet particular requirements established by the NRC. The LPRM subsystem has been designed to provide a sufficient number of LPRM inputs to the APRM and OPRM subsystems to meet the APRM and OPRM requirements. All other portions of the Neutron Monitoring System have no safety function. The system is classified as shown in Table 3.2-1. The safety-related subsystems are qualified in accordance with Sections 3.10 and 3.11.

7.6.1a.5.2 Power Source

The power sources for each system are discussed in the individual descriptions.

7.6.1a.5.3 Source Range Monitor (SRM) Subsystem

The SRM is a non-safety subsystem. See Subsection 7.7.1.13.

7.6.1a.5.4 Intermediate Range Monitor (IRM) Subsystem

7.6.1a.5.4.1 Equipment Design

7.6.1a.5.4.1.1 Description

The IRM monitors neutron flux from the upper portion of the SRM range to the lower portion of the power range. The IRM subsystem has eight IRM channels, each of which includes one detector that can be positioned in the core by remote control. The detectors are inserted into the core for a reactor startup and are withdrawn after the reactor mode selector switch is turned to RUN.

(1) Power Supply

Power is supplied separately from two 24 VDC sources. The supplies are split according to their uses so that loss of a power supply will result in loss of only one trip system of the reactor protection system.

(2) Physical Arrangement

Each detector assembly consists of a miniature fission chamber attached to a low-loss, quartz-fiber-insulated transmission cable. When coupled to the signal conditioning equipment, the detector produces a reading of full scale on the most sensitive range with a neutron flux of 4×10^8 nv. The detector cable is connected underneath the reactor vessel to a triple-shielded cable that carries the pulses generated in the fission chamber to the preamplifier.
The detector and cable are located in the drywell. They are movable in the same manner as the SRM detectors and use the same type of mechanical arrangement (see Figures 7.6-5 and 7.6-6 and Reference 7.6-1).

(3) Signal Conditioning

A voltage amplifier unit located outside the drywell serves as a preamplifier. This unit converts the current pulses to voltage pulses, modifies the voltage signal, and provides impedance matching. The preamplifier output signal is coupled by a cable to the IRM signal conditioning electronics (see Figure 7.6-9).

Each IRM channel receives its input signal from the preamplifier and operates on it with various combinations of preamplification gain and amplifier attenuation ratios. The amplification and attenuation ratios of the IRM and preamplifier are selected by a remote range switch that provides 10 ranges of increasing attenuation (the first 6 called low range and the last 4 called high range) acting on the signal from the fission chamber. As the neutron flux of the reactor core increases from 1×10^8 nv to 1.5×10^{13} nv, the signal from the fission chamber is attenuated to keep the input signal to the inverter in the same range. The output signal, which is proportional to neutron flux at the detector, is amplified and supplied to a locally mounted meter. Outputs are also provided for a remote meter and recorder.

(4) Trip Functions

The IRM Scram Trip Functions are discussed in Section 7.2. The IRM trips are shown in Table 7.6-3. The IRM Rod Block Trip Functions are discussed in Subsection 7.7.1.2.6.

7.6.1a.5.4.1.1.1 Bypasses and Interlocks

The arrangement of IRM channels allows one IRM channel in each group to be bypassed without compromising intermediate range neutron monitoring.

7.6.1a.5.4.1.2 Redundancy

The IRM system consists of 8 IRM channels, four of which are connected to one trip system, and the other four are connected to the other trip system. The redundancy and single failure requirements are met because any single failure with the IRM system cannot prevent needed safety action of the IRM system. (See also Subsection 7.2.1.1.4.2.)

7.6.1a.5.4.1.3 Testability

Each IRM channel is tested and calibrated using the procedures listed in the IRM instruction manual as a reference. The IRM detector drive mechanisms and the IRM rod blocking functions are checked in the same manner as for the SRM channels. Each IRM channel can be checked to ensure that the IRM high flux scram function is operable.

7.6.1a.5.4.2 Environmental Conditions

The wiring, cables, and connectors located in the drywell are designed for the same environmental conditions as the SRMs.

The IRM pre-amplifier, located in the reactor building and the monitor, located in the control room, are designed to operate under all expected environmental conditions in those areas. The IRM system components are designed to operate during and after certain design basis events such as earthquakes, accidents, and anticipated operational occurrences.

7.6.1a.5.4.3 Operational Considerations

The IRM range switches must be upranged or downranged to follow increases and decreases in power within the range of the IRM to prevent either a scram or a rod block. The IRM detectors must be inserted into the core whenever these channels are needed, and withdrawn from the core, when permitted, to prevent their burnup. The identification scheme for the IRM subsystem is given in Subsection 7.2.2.1.2.3.1.22.

The method used for identifying power and signal cables and raceways as safety-related equipment, and the identification scheme used to distinguish between redundant cables, raceways, and instrument panels is in accordance with the recommendations of IEEE 279-1971, Paragraph 4.6.

7.6.1a.5.5 Local Power Range Monitor (LPRM) Subsystem

7.6.1a.5.5.1 Equipment Design

7.6.1a.5.5.1.1 Description

The LPRM consists of fission chamber detectors, signal conditioning equipment, and trip functions. The LPRM provides outputs to the APRM, the RBM, and the plant computer. One of the LPRM detector assemblies also contains electrodes to measure the electrochemical corrosion potential (ECP) of the reactor water. The LPRM signal processing is performed by the electronic equipment that performs the APRM functions.

(1) Power Supply

Detector polarizing voltage for the LPRMs is supplied by eight pairs of redundant LPRM detector DC power supplies, adjustable from 75 to 200 VDC. Each LPRM detector DC power supply pair powers approximately one-eighth of the LPRMs. Power for the LPRM detector DC power supplies comes redundantly from the two 120 Vac buses via intervening DC power supplies.

The LPRM detector DC power supplies are located in the electronic chassis that houses the LPRM signal processing equipment. Each electronic chassis houses one pair of LPRM detector DC power supplies and the electronics for processing approximately one-eighth of the total LPRM detector signals (or approximately one-half of the 43 detectors per APRM/LPRM channel).

The intervening DC supplies are located in a separate power supply chassis. Each power supply chassis contains up to 4 Low Voltage DC Power Supplies (LVPSs). One of the 120 Vac busses provides input power to 2 of the LVPSs in the power supply chassis while the second 120 Vac bus provides input power to the other two LVPSs in the power supply chassis. Two of the LVPSs in the power supply chassis, one operating from each of the two 120 Vac busses, supply “auctioned” low voltage power to the electronic chassis. If either of the two 120 Vac power busses is lost, or if either of the two LVPSs fail, the remaining LVPSs will continue to supply low voltage power to the electronic chassis.

The auctioned low voltage power input to the electronic chassis provides power to each pair of LPRM detector DC power supplies in the electronic chassis and the LPRM (and APRM) signal processing hardware in the chassis. The LPRM detector polarizing voltage for all of the detectors processed by the electronic chassis (21 in one chassis and 22 in the other) is normally provided by one of the two LPRM detector DC power supplies in the electronic chassis. If that one DC power supply fails, the second LPRM detector DC power supply is automatically switched in to supply LPRM detector polarizing voltage.

The 75 - 200 Vdc LPRM detector DC power supplies can supply up to 3 milliamperes for each LPRM detector, which ensures that the chambers can be operated in the saturated region at the maximum specified neutron fluxes. The voltage applied to the detectors varies no more than 2 Vdc over the maximum variation of electrical input and environmental parameters.

(2) Physical Arrangement

The LPRM includes 43 LPRM detector strings having detectors located at different axial heights in the core; each detector string contains four fission chambers. These assemblies are distributed to monitor four horizontal planes throughout the core. Figure 7.6-3 shows the LPRM detector radial layout scheme that provides a detector assembly at every fourth intersection not containing control crosses of the water channels around the fuel bundles. Thus, the uncontrolled water gap has either an actual detector assembly or a symmetrically equivalent assembly in some other quadrant. The detector assemblies (see Figure 7.6-10) are inserted in the core in spaces between the fuel assemblies. They are inserted through thimbles mounted permanently at the bottom of the core lattice and penetrate the bottom of the reactor vessel. These thimbles are welded to the reactor vessel at the penetration point. They extend down into the access area below the reactor vessel where they terminate in a flange. The flange mates to the mounting flange on the in-core detector assembly. The detector assemblies are locked at the top end to the top fuel guide by means of a spring loaded plunger. Special water sealing caps are placed over the connection end of the assembly and over the penetration at the bottom of the vessel during installation or removal of an assembly. This prevents loss of reactor coolant water on removal of an assembly and also prevents the connection end of the assembly from being immersed in the water during installation or removal.

Each LPRM detector assembly contains four miniature ion chambers with an associated solid sheath cable. The chambers are vertically spaced in the LPRM detector assemblies in a way that gives adequate axial coverage of the core, complementing the radial coverage given by the horizontal arrangement of the LPRM detector assemblies. Each ion chamber produces a current that is coupled with the LPRM signal conditioning equipment to provide the desired scale indications.

Each miniature chamber consists of two concentric cylinders, which act as electrodes. The inner cylinder (the collector) is mounted on insulators and is separated from the outer cylinder by a small gap. The gas between the electrodes is ionized by the charged particles produced as a result of neutron fissioning of the uranium-coated outer electrode. The chamber is operated at a polarizing potential of approximately 100 VDC. The negative ions produced in the gas are accelerated to the collector by the potential difference maintained between the electrodes. In a given neutron flux, all the ions produced in the ion chamber can be collected if the polarizing voltage is high enough. When this situation exists, the ion chamber is considered to be saturated. Output current is then independent of operating voltage (Reference 7.6-1).

Each assembly also contains a calibration tube for a traversing in-core probe. The enclosing tube around the entire assembly contains holes that allow circulation of the reactor coolant water to cool the ion chambers. Numerous tests have been performed on the chamber assemblies including tests of linearity, lifetime, gamma sensitivity, and cable effects (Reference 7.6-1). These tests and experience in operating reactors provide confidence in the ability of the LPRM subsystem to monitor neutron flux to the design accuracy throughout the design lifetime.

One of the LPRM detector assemblies also contains special electrodes for measuring the electrochemical corrosion potential (ECP) of the reactor water in the lower head area of the reactor vessel. Except for sharing a common housing the ECP electrodes are completely independent of the ion chambers. The electrodes are located below the active core region and do not effect the neutron monitoring design of the LPRM detector assembly nor any of the neutron monitoring description or evaluation contained in this section. The ECP electrodes used solid sheath cable identical to that used for the ion chambers. The cable is brazed to the electrodes to provide a hermetic seal. The cable is brought out of the ECP/LPRM assembly using the same seal design as the ion chamber cables. The ECP electrodes provide analog signals to the Water Chemistry Data Acquisition System. Although the LPRM assembly with ECP electrodes may be located in any of the 43 LPRM detector assembly locations its specific location is based on ECP monitoring considerations.

(3) Signal Conditioning

The current signals from the LPRM detectors are transmitted to LPRM amplifiers located on LPRM Input Modules in the APRM/LPRM electronic chassis in the Lower Relay Room. Each LPRM Input Module provides amplification for up to 5 LPRM detector signals. The current signal from a chamber is transmitted directly to its amplifier through coaxial cable. The amplifier is a linear current amplifier whose voltage output is proportional to the current input and therefore proportional to the magnitude of the neutron flux. The amplifier output is “read” by the digital processing electronics. The digital electronics apply hardware gain corrections, performs filtering, and applies the LPRM gain factors. The digital electronics provide suitable output signals for the computer, recorders, annunciators, etc. The LPRM amplifiers also isolate the detector signals from the rest of the processing so that individual faults in one LPRM signal path will not affect other LPRM signals.

The LPRM signals are indicated on the unit operating benchboard. Subsection 7.7.1.2.5 describes the indications on the reactor control panel.

(4) Trip Functions

The trip functions for the LPRM provide trip signals to activate annunciators and displays on the Unit operating benchboard. Table 7.6-4 indicates the trips.

The trip levels can be adjusted to within ± 0.1% of full-scale deflection and are accurate to ± 1% of full-scale deflection in the normal operating environment.

7.6.1a.5.5.1.2 Bypasses and Interlocks

Each LPRM channel may be individually bypassed.

When the maximum number of bypassed LPRMs associated with an APRM channel has been exceeded, an APRM trouble alarm is generated by that APRM.

If the number of LPRMs available for an OPRM cell is less than the minimum required, the OPRM will no longer use that cell in its calculations. If less than the minimum number of cells is available to an OPRM, an inoperative alarm is generated by that OPRM.

7.6.1a.5.5.1.3 Redundancy

The LPRM channels meet the redundancy criterion because of the multiplicity of sensing channels. The minimum number of LPRMs that must be in service is shown in Dwgs. M1-C51-35, Sh. 1 and M1-C51-35, Sh. 2.

7.6.1a.5.5.1.4 Testability

LPRM channels are calibrated using data from previous full power runs and TIP data and are tested with procedures in the applicable instruction manual.

7.6.1a.5.5.2 Environmental Considerations

Each individual chamber of the assembly is a moisture-proof, pressure sealed unit. The chambers are designed to operate up to 600°F and 1250 psig. The wiring, cables, and connectors located within the drywell are designed for continuous duty up to 270°F; 100% relative humidity and a 4-hour single exposure rating of 482°F at 100% relative humidity. The LPRMs are capable of functioning during and after certain design basis events such as earthquakes and anticipated operational occurrences.

7.6.1a.5.5.3 Operational Considerations

The LPRM is a monitoring system with no special operating considerations.

7.6.1a.5.6 Average Power Range Monitor (APRM) Subsystem

(References 7.6-1 through 7.6-4)

7.6.1a.5.6.1 Equipment Design

7.6.1a.5.6.1.1 Description

The APRM subsystem has four APRM channels. The APRM subsystem equipment performs both the APRM and OPRM functions. Each APRM uses input signals from 43 LPRM detectors. Each of the four APRM channels provides input to four 2-out-of-4 voter channels. Two of the voter channels are associated with each of the trip systems of the Reactor Protection System.

(1) Power Supply

Power for the LPRM, associated APRM/OPRM channel, and the RBMs channels is provided by the two independent 120 Vac power sources used for RPS. Each APRM 2-out-of-4 voter channel receives power from one of the two 120 Vac busses with each bus supplying power to two of the voter channels. The APRM, OPRM, LPRM and RBM functions will continue to operate as long as either of the two 120 Vac busses is still available. However, if one of the two 120 Vac busses is lost, the two voter channels supplied by that bus will go to the tripped state resulting in a RPS half scram.

(2) Signal Conditioning

The APRM channel uses digital electronic equipment that averages the output signals from a selected set of LPRMs, generates trip outputs via the 2-out-of-4 voter channels (see Section 7.6.1a.5.6.1.1(3)), and provides signals to readout equipment.

Each APRM channel can average the output signals from up to 43 LPRM channels. Assignment of LPRM channels to an APRM follows the pattern shown in Dwgs. M1-C51-35, Sheets 1 and 2. Position A is the bottom position, Positions B and C are above Position A, and Position D is the topmost LPRM detector position. The pattern provides LPRM signals from all four core axial LPRM detector positions throughout the core. Some LPRM detectors may be bypassed, but the averaging logic automatically corrects for these by removing them from the average.

The APRM flux value is developed by averaging the LPRM signals and then adjusting the average by a digitally entered factor to allow calibration of the APRM to be APRM power. The APRM power is processed through a first order filter with a six second time constant to calculate simulated thermal power. The APRM simulated thermal power upscale rod block and scram trip setpoints are varied as a function of reactor recirculation flow. The slope of the upscale rod block and scram trip response curves is set to track the required trip setpoint with recirculation flow changes. These calculations are all performed by the digital processor and result in a digital representation of APRM power (unfiltered) and simulated thermal power, and of the flow-biased rod block and scram setpoints.

Each APRM channel calculates a flow signal that is used to determine the APRM's flow-biased rod block and scram setpoints (see Dwgs. M1-B31-13, Sheets 2 and 3). Each signal is determined by summing the flow signals from the two recirculation loops.

These signals are sensed from two flow elements, one in each recirculation loop. The differential pressure from each flow element is routed to four differential pressure transducers (eight total). The signals from two differential pressure transducers, one from each flow element, are routed to two inputs to each APRM channel's digital electronics.

Each APRM also includes an OPRM Trip Function. For this function, LPRMs are assigned to up to four OPRM "cells," with each cell including 4 LPRMs. The OPRM function combines the signals from each LPRM in an OPRM cell and evaluates that combined cell signal using the OPRM algorithms to detect thermal-hydraulic instabilities.

All APRM channels are powered redundantly, via intervening low voltage DC power supplies, from both of the two 120 Vac RPS power busses. The LPRM signal processing equipment is powered by the same sources as their associated APRM channels.

(3) Trip Function

The APRM trip functions are performed by digital comparisons within APRM electronics. For each RPS trip and rod block alarm, the APRM power or simulated thermal power, as applicable, is compared to the setpoint. If the power value exceeds the setpoint, the applicable trip is issued. Trip signals from each APRM channel are provided via APRM interface hardware directly to the Reactor Manual Control System and via the APRM 2-out-of-4 voter channels to the Reactor Protection System (RPS). APRM system trips are summarized in Table 7.6-5.

An OPRM trip output is generated from an APRM channel when the period based detection algorithm in that channel detects oscillatory changes in the neutron flux, indicated by the combined signals for the LPRM detectors in a cell, with the period confirmations and relative cell amplitude exceeding specific setpoints. One or more cells in a channel exceeding the trip conditions will result in a channel trip. An OPRM trip is also issued from any APRM channel if either the growth rate or amplitude based algorithms detect growing oscillatory changes in the neutron flux from one or more cells in that channel. The OPRM trip output is automatically enabled (not-bypassed) when the APRM STP is equal to or above the OPRM auto-enable power setpoint and recirculation flow is equal to or below the OPRM auto-enable flow setpoint. The OPRM trip output is automatically bypassed when STP and recirculation flow are not within the OPRM trip enabled region. The OPRM trip is active only when the reactor mode switch is in the RUN position. OPRM trips are summarized in Table 7.6-7.

At least two unbypassed APRM channels must be in the APRM high trip or inoperative trip state to cause an APRM/Inop RPS trip output from the APRM 2-out-of-4 voter channels (see Figure 7.6-12a). Similarly, at least two unbypassed APRM channels must be in the OPRM trip state to cause an OPRM RPS trip output from the APRM 2-out-of-4 voter channels. The APRM/Inop and OPRM trips are voted independently. In either of these conditions, all four voter channels will provide a RPS trip output, two to each RPS trip system. If only one unbypassed APRM channel is providing a trip output, each of the four APRM 2-out-of-4 voter channels will have a half-trip, but no trip signals will be sent to the RPS. Trip outputs to the RPS are transmitted by removing voltage to a relay coil, so loss of power results in actuating the RPS trips. A simplified APRM/RPS interface circuit arrangement is shown in Figure 7.2-6-1.

Any one unbypassed APRM can initiate a rod block. Subsection 7.7.1.2, “Reactor Manual Control System,” describes in more detail the APRM rod block functions.

In the startup mode of operation, the APRM “fixed” high trip setpoint is set down to a low level. This trip function is provided in addition to the existing IRM upscale trip in the startup mode.

The trips from one APRM channel can be bypassed by operator action in the control room, which bypasses both the APRM/Inop and OPRM trips from that APRM channel.

(4) Post-Accident Neutron Flux Monitoring Function

The APRM System provides redundant post-accident neutron flux monitoring required by Regulatory Guide 1.97, Revision 2, via APRM Channels 1-4.

The use of the conventional NMS to perform the post-accident monitoring function was evaluated from an Emergency Procedure Guideline (EPG) standpoint in NEDO-31558A. NEDO-31558A provides alternate criteria for the NMS to meet the post-accident monitoring Guidance of Regulatory Guide 1.97. Based on the results of this BWROG report and a SSES specific review, it is concluded that the SSES APRMs will provide the required post-accident neutron flux monitoring capabilities.

7.6.1a.5.6.1.2 Bypasses and Interlocks

The APRM amplifier gain can be adjusted by combining fixed resistors and potentiometers to allow calibration. The averaging circuit automatically corrects for the number of unbypassed LPRM amplifiers providing inputs to the APRM.

One of the four APRM channels can be bypassed at any time. None of the APRM 2-out-of-4 voter channels can be bypassed. An interlock circuit provides an APRM trouble alarm whenever the number of LPRM inputs to an APRM or the number of operable OPRM cells is less than the required minimum.

For Unit 2, one of the two flow units in each trip system may be bypassed at any time. One of the three APRMs in each trip system may be bypassed at any time. An interlock circuit provides an inoperative trip output from an APRM whenever the minimum number of LPRM inputs to it is not met.

7.6.1a.5.6.1.3 Redundancy

Four independent APRM channels monitor neutron flux for both APRM and OPRM trips and each channel provides inputs to all four independent APRM 2-out-of-4 voter channels. A trip condition in any one APRM channel does not cause the APRM 2-out-of-4 voters to initiate a trip in any RPS trip system. The APRM 2-out-of-4 voters must receive a trip signal from at least two unbypassed APRM channels in order to initiate a trip in any RPS trip system.

For Unit 2, six independent channels of APRMs monitor neutron flux. The six channels are separated into two groups of three, one group per RPS trip system. Any one of the three APRMs indicating an abnormal condition will initiate the associated trip system. Initiation of both trip systems causes a reactor scram.

7.6.1a.5.6.1.4 Testability

APRM channels are calibrated using data from previous full power runs and are tested by procedures in the applicable instruction manual. Each APRM channel can be tested individually for the operability of the APRM scram and rod blocking functions by introducing test signals.

7.6.1a.5.6.2 Environmental Considerations

All APRM equipment is installed and operated in the control structure environment as described in Table 3.11-1. The APRM system is capable of functioning during and after certain design basis events such as earthquakes and anticipated operational occurrences.

7.6.1a.5.6.3 Operational Considerations

The APRM system is a monitoring system which has no special operational considerations.

The method used for identifying power and signal cables and raceways as safety-related equipment, and the identification scheme used to distinguish between redundant cables, raceways, and instrument panels is in accordance with the requirements of IEEE 279-1971, Paragraph 4.6.

7.6.1a.5.7 Rod Block Monitor (RBM) Subsystem

See Subsection 7.7.1.11.

7.6.1a.5.8 Traversing In-Core Probe Subsystem

The TIP system is discussed in Subsection 7.7.1.6.

7.6.1a.6 Rod Block Trip System - Instrumentation and Controls

See Subsection 7.7.1.2.6.

7.6.1a.7 Rod Sequence Control System (RSCS) - Instrumentation and Controls

See Subsection 7.7.1.2.7.

7.6.1a.8 Recirculation Pump Trip (RPT) System - Instrumentation and Controls

7.6.1a.8.1 System Identification

The recirculation pump trip system includes the sensors, logic circuitry, switches and circuit breakers that cause main power to be disconnected from both recirculation pumps upon closure signals from the turbine stop valves or turbine control valve in the event of a turbine trip or generator load rejection.

The recirculation trip system is designed to aid the RPS in protecting the integrity of the fuel barrier. Turbine stop valve closure or turbine control valve fast closure will initiate a scram and concurrent recirculation trip in order to keep the core within the thermal hydraulic safety limits during operational transients.

7.6.1a.8.1.1 Safety Classification

The recirculation pump trip (RPT) system is a Class 1E system.

7.6.1a.8.1.2 Reference Design

The RPT system is not similar to any previous design although it does share certain redundant sensors and logic circuitry with the reactor protection system (RPS).

7.6.1a.8.2 Power Sources

The RPT system utilizes the 125 VDC RPS power supplies for the logic and the breaker trip coils. The 125 VDC is supplied by two separate divisions of Class 1E station batteries.

7.6.1a.8.3 Equipment Design

7.6.1a.8.3.1 Initiating Circuits

Initiating circuitry is shown on Dwgs. M1-C72-2, Sh. 1, M1-C72-2, Sh. 2, M1-C72-2, Sh. 3 and M1-C72-2, Sh. 4. RPS inputs sense turbine stop valve closure (turbine trip) or turbine control valve fast closure (load rejection). These inputs utilize four-division RPS logic and are combined into the two-divisional two-out-of-two systems utilized for RPT function. The devices utilized to sense turbine trip and full load rejection are discussed in Subsection 7.2.1.1.4.4.2.

7.6.1a.8.3.2 Logic

The basic logic arrangement is shown in Dwgs. M1-C72-2, Sh. 1, M1-C72-2, Sh. 2, M1-C72-2, Sh. 3 and M1-C72-2, Sh. 4. RPT Logic is a Two Divisional Two-out-of-two once design for both the control and stop valve logic.

The logic functions such that:

(1) The losing of one Turbine Stop Valve will not cause an RPT trip.

(2) The closing of two Turbine Stop Valves may or may not cause an RPT trip depending on which stop valves are closed.

(3) The closing of three or more Turbine Stop Valves will always yield a RPT trip.

A Permissive for Equivalent Reactor Power above 26% equated to Turbine First Stage Pressure is in series with the combined Turbine Valve Logic Train. Initiation requires confirmation by sensors located in two RPS Divisions and represents an energize to actuate circuit.

There are four RPT Breakers. Each division of RPT logic controls two breakers. Of these two breakers, one is in series with each Recirculation Pump Motor Power Supply such that a single division RPT Actuation will trip both Recirc Pumps. See Subsection 7.7.1.3.3.2.1 for a discussion of ATWS trip.

7.6.1a.8.3.3 Instrument Piping

Instrument piping is not required. Cables from sensors and power cables are routed such that no single event involving a single panel, cabinet, or raceway can disable the RPT function.

7.6.1a.8.3.4 Actuated Devices

The actuator logic allows current to flow into the breaker trip coils when a trip signal is received. The breakers interrupt the main power supply when the coil is energized.

7.6.1a.8.3.5 Separation

Sensors utilized to monitor for turbine trip and full load rejection are incorporated in the reactor protection system, where they are combined into a two-divisional system for input to the RPT system. All system wiring outside the cabinets is run in accordance with applicable separation requirements.

7.6.1a.8.3.6 Testability

See Subsection 7.2.1.1.4.8.

7.6.1a.8.4 Environmental Considerations

The electrical modules and sensors are located in the control structure and/or the turbine building. The environmental conditions for these areas are shown in Section 3.11.

7.6.1a.8.5 Operational Considerations

7.6.1a.8.5.1 General Information

Actuator logic is designated A, B, C, and D and actuation devices (breaker trip coil) by Divisions 1 and 2. During normal operation the conditions of sensors and logic devices is shown in Dwgs. M1-C72-2, Sh. 1, M1-C72-2, Sh. 2, M1-C72-2, Sh. 3 and M1-C72-2, Sh. 4.

7.6.1a.8.5.2 Reactor Operator Information

(1) Indicators

a. Trip initiate indicators, wired across the trip contacts, extinguish when actuator logic closes the contact to the breaker trip coil. These indicators also monitor the continuity of the trip coils when the breaker is closed.

b. Breaker tripped indicators are energized when the breaker is physically open (i.e., tripped).

(2) Annunciators

a. Trip initiate annunciation is indicated by trip channel monitoring.

b. Trip condition of the breakers is annunciated.

7.6.1a.8.5.3 Setpoints

Initiate signals are provided by the RPS and are covered under Subsection 7.2.1.1.6.3.

7.6.1a.8.6 IEEE-279 Design Basis Considerations

IEEE Standard 279-1971 Section 3 Paragraphs 1 through 9 defines the design-basis requirements. A listing of each of these requirements and its applicability to the RPT system is as follows:

(1) Document the Generating Station conditions which require protective action - RPT is a system which provides more rapid reactor shutdown for turbine trip or generator trip. No additional conditions requiring protective action are involved.

(2) Generating station variables - the RPT system monitors turbine stop valve position, turbine control valve position, and reactor power level.

(3) Documentation of minimum number and location of sensors required to monitor adequately.

(a) The RPT system is based on two separate trip divisions, each of which has at least two sensors.

(b) Location of sensors. Bechtel input required.

(4) Operational Limits

(a) Turbine Stop Valve Normal operation is with valve fully open.

(b) Turbine control Valve Normal operation is from fully open to fully closed.

(5) Margin between Operational Limit and Unsafe Condition

(a) Turbine Stop Valve Closure

The start of the turbine stop valve closure event is defined as the beginning of turbine stop valve motion from its original fully open position.

(b) Turbine Control Valve Fast Closure

The start of the turbine control valve fast closure event is defined as the change of state of the control valve hydraulic pressure switch.

(6) Levels that, when reached, will require protective action.

(a) Turbine Stop Valve Closure

The trip setpoint is a fixed valve position less than 100% open but greater than 90% open. This has no effect below 26% equivalent reactor power, when the trip function is bypassed.

(b) Turbine Control Valve Fast Closure

The trip setpoint is the start of control valve fast closure. This has no effect below 26% equivalent reactor power, when the trip function is bypassed.

(7) Document the Range of Transient and Steady State Conditions Throughout Which the System Must Perform - See Subsections 8.3.1, 8.3.2, 3.10 and 3.11.

(8) Document the Malfunctions, Accidents and Other Unusual Events which could cause Damage - see Subsections 7.2.1.2.8, and 7.3.1.2.8.

(9) Document minimum performance requirements - see Table 7.2-1.

7.6.1a.9 Process Computer System-Rod Worth Minimizer (RWM) – Instrumentation and Controls

See Subsection 7.7.1.2.8

7.6.1b DESCRIPTION

The following discussion describes non-NSSS, safety-related instrumentation and controls:

(1) Containment atmosphere monitoring
(2) Process and effluent radiological monitoring system

(3) Diesel generator initiation (NSSS to non-NSSS interlock)

(4) Drywell entry purge (air purge) system

7.6.1b.1 Containment Monitoring - Instrumentation and Controls

The following variables are monitored:

a) Containment drywell and suppression chamber pressures
b) Containment drywell atmosphere and suppression chamber atmosphere temperatures
c) Suppression pool level
d) Containment airborne particulate radioactivity
e) Suppression Pool Temperature
f) Primary containment radiation (high range)
g) Safety/Relief Valve Position Indication System

7.6.1b.1.1 Primary Containment Drywell and Suppression Chamber Pressure Monitoring System

7.6.1b.1.1.1 System Identification

This system is designed to monitor the pressure in the primary containment and in the suppression chamber during normal plant operation and after a LOCA. The specific instruments used for normal operation as well as those used for accident conditions are discussed below.

Pressure monitoring within the containment provides an indirect method of leakage detection. Refer to Subsection 3.8.1.1 for description of the primary containment.

7.6.1b.1.1.2 Safety Evaluation

The instrumentation for post-accident monitoring is safety related.

Two redundant, divisionalized, LOCA range and two redundant, divisionalized Hi Accident range pressure sensing circuits are provided for the primary containment drywells for accident monitoring in accordance with NUREG 0578, Subsection 2.1.9.b. Two redundant divisionalized, LOCA range pressure sensing circuits are also provided for accident monitoring of the suppression chamber pressure.

Redundant indicating recorders are used for indication and historical record of the four LOCA range and the two Hi Accident range, post-accident, pressure measurements. These indicating recorders are located in the main control room.

For normal operation, one indicating meter is located in the control room, measuring the narrow range pressure of either the primary containment drywell or the suppression chamber. Another meter is located on the Remote Shutdown panel, measuring the narrow range pressure of the drywell. These measurements for normal operation are not safety related.

7.6.1b.1.1.3 Power Supply

Post-accident monitoring instrumentation is powered by separate divisionalized Class 1E buses.

7.6.1b.1.1.4 Equipment Design

The LOCA and Hi Accident ranges are provided for post-accident monitoring and the narrow range is provided for normal operation monitoring. Main Control Room safety grade recorders will provide monitoring and verification of suppression chamber pressure and drywell pressures.

Electronic Alarm Switches initiate high or low pressure alarms in the Main Control Room. The alarm contacts provide isolation of the annunciator which is not safety grade.

See Table 7.5-3 for details of safety-related instrumentation.

7.6.1b.1.1.5 Redundancy

Redundancy, where required, is provided by the divisionalization of the instrumentation.

7.6.1b.1.1.6 Separation

Redundant circuits are physically and electrically separate.

7.6.1b.1.1.7 Operational Considerations

The primary containment drywell and the suppression chamber pressure monitoring system is designed for the following operating modes:

a) Initial purging and pressurization of the containment.

b) During normal reactor operation to monitor pressure of containment drywell and suppression chamber.

c) Indication and historical record of pressure after an accident.

d) Indication of containment drywell pressure on the remote shutdown panel.

7.6.1b.1.1.8 Environmental Consideration

The pressure transmitters located outside the primary containment are designed and qualified to withstand all anticipated environmental conditions in accordance with IEEE-323-1974 and IEEE-344-1975.

7.6.1b.1.2 Primary Containment Drywell and Suppression Pool Temperature Monitoring System

7.6.1b.1.2.1 System Identification

The Primary Containment Drywell and Suppression Pool systems are designed to monitor the temperature of the primary containment and suppression pool during normal plant operations and after a LOCA. The specifics of using the process computer to monitor the average suppression pool temperature are discussed in Section 7.6.1b.1.2.4.2.

7.6.1b.1.2.2 Safety Evaluation

The indication of containment temperatures in the control room is required for post-accident monitoring and is safety related. The initiating contacts for the automatic start of the drywell fans are derived from electronic switches in the temperature sensing loop. This function is not safety-related. However, the system design conforms to all applicable criteria for physical separation and divisionalization. Refer to Subsection 7.3.1.1b. The hardcopy timeplot of the containment temperatures is operating history only and is not safety related. However, redundant systems are provided.

The indication of suppression pool temperature in the control room is required to ensure that the plant is always operating within the technical specification limits. Manual operator action is required to maintain the plant within the specifications. Suppression pool temperature is also required for post-accident monitoring and remote shutdown. All of these safety-related functions are performed by the Suppression Pool Temperature Monitoring System (SPOTMOS.

The system design conforms to all applicable criteria for physical separation and divisionalization. Refer to Subsection 7.3.1.1b.

The Suppression Pool Temperature Monitoring system includes redundant chassis, displays, and recorders that are “divisionalized”. Hardcopy plotting of suppression pool temperature operating history is not safety related and is available offline.

Each system provides a continuous, isolated signal to the remote shutdown panel (RSP) which does not require any transfer action in the Control Room. Two indicators are provided at each RSP and are divisionalized.

The primary Containment and suppression pool temperature elements and temperature indicators will be qualified to operate following a DBA.

7.6.1b.1.2.3 Power Sources

The safety-related instrumentation is powered from divisionalized power sources. Division I Class 1E bus powers Loop A, Division II Class 1E bus powers Loop B.

7.6.1b.1.2.4 Equipment Design

7.6.1b.1.2.4.1 Equipment Design-Containment Temperature

Four dual element RTDs per redundant system are located in the primary containment to sense the temperature at the following elevations:

a) Reactor pressure vessel head

b) Upper platform
c) Lower platform

d) Drywell (below reactor pressure vessel).

Two redundant temperature elements monitor the suppression chamber air space temperature.

The selected location for the temperature sensors helps the operator to define the area of the heat source within the primary containment.

The signal from the RTD elements is amplified by electronic temperature transmitters to drive meters, recorder channels, and alarm switches in the control room.

Two redundant recorders, for the primary containment are located in the main control room. The initiating contacts for the high speed start of the drywell cooling fans (refer to system description in Section 9.4) are derived from the two redundant temperature sensing elements located in the service area of the fans. If the standby fan is in "Auto High" and high temperature condition is detected or the operating drywell cooler fails (resulting in loss of air flow), then the electronic switches or the PDSLs will initiate high speed operation of standby drywell unit cooler.

Electronic signal converters with full electrical input-output isolation are placed between safety-related instrumentation and the input channels to the recorders.

Two redundant multipoint recorders for the primary containment pool temperature monitoring system provide a permanent history of all RTD measurements to the operator in the control room.

Each temperature sensing circuit is equipped with alarm switches and initiate one control room alarm per redundant channel.

One temperature indicator for the primary containment is located on the remote shutdown panel. Refer to Subsection 7.4.1.4 for system description. Instrument ranges are defined in Section 7.5.

7.6.1b.1.2.4.2 Equipment Design-Suppression Pool Temperature

SPOTMOS monitors suppression pool temperature with two redundant systems, each of which performs as described below.

Eight RTD's per redundant system are located in the suppression pool approximately six inches below the minimum pool water level. These sensors are located around the pool in order to provide a good spatial distribution of pool temperature. Refer to Table 7.6-9 for exact location of these sensors. These RTD's are referred to as the upper level RTD's.

In addition there are four RTD's (Division 1 only) that are located sixteen feet below minimum pool water level. These sensors are located around the pool in order to provide a good spatial distribution of pool temperature. These RTD's are referred to as the lower level RTD's.

All of the RTD's are Class 1E. The four lower level RTD's are not seismically qualified. The lower RTD's are designated Class 1E and designed as affiliated circuits.

In addition to these eight upper-level RTD sensors, there are four additional sensors located sixteen feet below the minimum water level. These sensors are located in each quadrant of the pool for a good spatial distribution of pool temperature. The bottom-level RTDs only input into the Division I SPOTMOS system. The eight upper-level RTDs are Class IE, but the bottom-level RTDs are not seismically qualified.
The signals from the sensors are processed by an electronic unit located on a main control room back panel. The electronic unit converts the RTD signals into degrees Fahrenheit and calculates three averages of suppression pool temperatures. The three averages are: SPOTMOS average temperature, bottom average temperature, and bulk pool temperature. SPOTMOS average temperature is a single average of the eight upper-level RTDS. This average is valid if at least six of the eight upper-level RTDs are operable with at least one sensor in each quadrant. Bottom average temperature is a simple average of the four bottom-level RTDs. This average is valid if at least three of the four bottom-level RTDs are operable. Bulk pool temperature is weighted average of the SPOTMOS average temperature and the bottom average temperature. Bulk pool temperature is valid when both the SPOTMOS average temperature and bottom average temperature are valid. Bulk pool temperature may be manually calculated if there is no test or transient in progress that adds heat to the containment.

If the electronic unit detects an input RTD signal failure, an alarm is generated and the failed RTD is automatically bypassed in the average temperature calculations. The average temperatures are displayed on digital displays located on the electronic unit and on a digital recorder at the main control board. The SPOTMOS average temperature is displayed on a vertical meter located on the RSP. The digital displays on the electronic unit allow the operator to display and trend any individual temperature input in addition to the averages. The operator may also bypass any RTD signal manually.

A high temperature alarm is generated by comparing the SPOTMOS average temperature to several internally stored setpoints. The alarm condition is displayed by the digital displays on the electronic unit and the recorder at the main control board. The digital recorder stores the operating history (time / date stamped) of the system, which can be displayed and/or downloaded for remote storage and hard-copy printing. Storage capability of the digital recorder is sufficient to capture pre-event and post-event historical data. The electronic unit has a self checking diagnostic system that provides an error alarm if a failure is detected in any part of the system.

Electrically isolated digital signals are provided to interface with other plant information systems and the annunciator system on the main control board. Electrically isolated analog signals are provided to interface with indicators on the RSP.

The lower-level RTD signals are input into Division I. The signals are passed to Division II via an isolated fiber optic link between the electronic units. The individual RTD sensor data, SPOTMOS average temperature, bottom average temperature, and bulk pool temperature are passed to the plant process computer (PICSY) via a serial data link. A qualified isolator located at the electronic unit provides isolation of the safety-related electronic unit from the non-safety related process computer.

The plant process computer displays temperature data received from SPOTMOS. The process computer performs checks to insure valid data is transmitted across the serial data link. The process computer interfaces with the same annunciator that interfaces with the SPOTMOS electronic units (Suppression Pool Avg. Temp Hi). The plant process computer will generate high temperature alarms (based on SPOTMOS average temperature) when fixed setpoints are exceeded.

A trouble alarm is initiated if the number or position of the RTDs falls below the above criteria. If the minimum number of RTDs in a quadrant is not met, then the calculated SPOTMOS average temperature, bottom average temperature and bulk pool temperature are also uniquely identified as invalid.

For the purpose of monitoring suppression pool temperature, the SPOTMOS average temperature or bulk pool temperature displayed by either PICSY or SPOTMOS can be used. However, bulk pool temperature should be the primary indicator, when available, since it provides a more accurate representative of Suppression Pool Average Temperature and reduces the frequency of suppression pool cooling operation. During off normal or accident conditions, when the suppression pool is challenged, the SPOTMOS average temperature is used as the measurement of suppression pool temperature.

Instrument ranges and accuracies are defined in Table 7.5-3.

7.6.1b.1.2.5 Redundancy

Redundant instrumentation is provided for the safety-related portions of the containment and suppression pool temperature monitoring system.

7.6.1b.1.2.6 Separation

Physical and electrical separation is provided for the safety-related instrumentation. Non-safety circuits are isolated by Qualified Isolation Methods.

7.6.1b.1.2.7 Operational Consideration

The system is designed to function during normal plant operation and after a DBA.

7.6.1b.1.2.8 Environmental Consideration

All temperature sensing elements located inside the containment are designed to operate in the normal operating environment, during and after a LOCA. All electronic equipment and indicating devices are located within the control structure. Expected environmental conditions are defined in Chapter 3.

7.6.1b.1.3 Suppression Pool Water Level Monitoring System

7.6.1b.1.3.1 System Identification

The instrumentation for suppression pool water level monitoring is designed to provide indication and a record in the control room of the suppression pool level during normal plant operation and in accident conditions, including a LOCA.

7.6.1b.1.3.2 Safety Evaluation

Suppression pool water level indicating meters and recorders in the control room are used for post-accident monitoring and are safety related.

7.6.1b.1.3.3 Power Sources

Safety-related instrument circuits are powered from their respective divisionalized Class 1E power buses.

Non-safety instruments are energized by the unit instrument power bus.

7.6.1b.1.3.4 Equipment Design

Four redundant level transmitters, two of them calibrated for normal operation (narrow range) and two of them calibrated for post-accident monitoring (wide range), are continuously sensing the water level of the suppression pool. Each narrow range transmitter provides the signal for the divisionalized level indicating meter in the control room. Both level ranges provide input to the recorder input channels.

Suppression pool water level indication is provided for the remote shutdown panel. Refer to Subsection 7.4.1.4 for system description.

Instrument ranges are defined in Section 7.5.

7.6.1b.1.3.5 Redundancy

The system is designed with redundant instrument circuits.

7.6.1b.1.3.6 Separation

Full physical and electrical separation is maintained for safety-related instrumentation.

7.6.1b.1.3.7 Operational Considerations

The suppression pool water level monitoring instrumentation is functional during normal plant operation and provides level indication and recording for accident monitoring.

7.6.1b.1.3.8 Environmental Considerations

Level sensing instruments are located in the reactor building and are designed to operate in the normal operating environment, during and after a high energy line break. Signal conditioning and recording equipment are located in the control structure. Expected environmental conditions are defined in Chapter 3.

7.6.1b.1.4 Primary Containment and Suppression Chamber Airborne Particulate Radioactivity Monitoring System - Instrumentation and Controls

See Subsection 5.2.5.1.2.3.

7.6.1b.1.5 Primary Containment Radiation Monitoring System (High Range)

7.6.1b.1.5.1 System Identification

This system is designed to monitor the radiation (gamma) in the primary containment during LOCA.

7.6.1b.1.5.2 Safety Evaluation

The instrumentation for post-accident monitoring is safety related.

Two redundant high range divisionalized radiation sensing circuits are provided for the primary containment drywell. In accordance with NUREG 0578 and 0737, redundant indicating recorders are used for indication and historical record in the main control room.

7.6.1b.1.5.3 Power Supply

Post-accident monitoring instrumentation is powered by separate divisionalized Class 1E buses.

7.6.1b.1.5.4 Equipment Design

The wide range is provided for post-accident monitoring. Main Control Room safety grade recorders will provide radiation level data from 1 R/hr to 10^7 R/hr. Electronic alarm switches in containment initiate high radiation in the Main Control Room. The alarm contacts provide isolation of the annunciator, which is not safety grade.

See Table 7.5-3 for details of safety-related instrumentation.

7.6.1b.1.5.5 Redundancy

Redundancy, where required, is provided by the divisionalization of the instrumentation.

7.6.1b.1.5.6 Separation

Redundant circuits are physically and electrically separate.

7.6.1b.1.5.7 Operational Considerations

The primary containment radiation monitoring system (high range) is designed for the following operating modes:

(a) Monitoring of containment radiation during and after a LOCA (or other accident).

(b) Alarm of high radiation levels, annunciated in the Main Control Room.

(c) Indication and historical record of radiation during and after an accident.

7.6.1b.1.5.8 Environmental Consideration

The radiation transmitters located within the primary containment are designed and qualified to withstand all anticipated environmental conditions in accordance with IEEE-323-1974 and IEEE-344-1975.

7.6.1b.1.6 Safety/Relief Valve Position Indication System

7.6.1b.1.6.1 System Identification

The Safety/Relief Valve Position Indication System is designed for monitoring the safety/relief positions and to provide the operator with unambiguous indication of valve position (open or closed) during normal plant operation and in accident conditions, including a LOCA.

7.6.1b.1.6.2 Safety Evaluation

The SRV Position Indication System is safety related and, although not qualified for the post-accident environment, the equipment is designed to withstand the postulated post-LOCA conditions in accordance with the guidance of Regulatory Guide 1.97. The SRV Position Indication System is seismically qualified for the maximum postulated load combinations, including hydrodynamic loads. Because only low-energy instrumentation circuits are located in the primary and secondary containment areas, no failure of SRV position indication system components due to post-accident harsh environments can affect the integrity of the Class 1E power sources.

7.6.1b.1.6.3 Power Sources

The SRV Position Indication System is powered from divisionalized power sources. Division I Class 1E bus (120 VAC) supplies power to the 8 "A" safety/relief valves. Division II Class 1E bus (120 VAC) supplies power to the 8 "B" safety/relief valves.

7.6.1b.1.6.4 Equipment Design

Piezoelectric vibration elements are strapped to each discharge pipe in proximity to the safety/relief valve. The flow through the valve generates acoustical levels or vibrations which are easily detected by these piezoelectric accelerometers. By using the relationship between valve flow rate and the corresponding vibration level set up, a determination of valve position can be made.

The piezoelectric accelerometers produce a charge that is proportional to the acceleration level. The delta charge produced by a change in flow and therefore a change in the vibration level is amplified by a charge sensitive feedback amplifier located inside the containment. These amplifiers do not require cabling to bring power to them because they are powered by current superimposed on the output signal. This current is provided by the electronics in the control room.

The control room electronics consists of modular units that are housed in instrument bins located in Panels 1C-690 A&B. Each bin contains all the modules necessary for eight SRV Position Indication Channels including power supplies. Each Channel provides independent monitoring and alarm contact status. One module processes the signal from the amplifiers and displays valve flow with a LED (light emitting diode) bargraph. This module determines if the valve flow is in excess of the setpoint and outputs alarm signals to LED annunciators located in Panel 1C-601 (one annunciator per Safety/Relief Valve) and a ganged alarm annunciator located in Panel 1C-601 (common to all 8 channels). If an SRV should open, the alarm condition would be shown by a LED in one of the bins located in Panels 1C-690 A&B, the LED alarm annunciators located in Panel 1C-601 and the ganged alarm annunciators located in Panel 1C-601.

The alarm setpoint is factory set at 25% of valve rated flow. However this setpoint can be changed to other valve flow rate values (refer to the System's Manual).

7.6.1b.1.6.5 Redundancy

None required.

7.6.1b.1.6.6 Separation

Divisions A and B (each consisting of 8 SRV Position Indication Channels) are physically and electrically separated.

7.6.1b.1.6.7 Operational Considerations

The SRV Position Indication System is designed to function during normal plant operation and after a DBA.

7.6.1b.1.6.8 Environmental Considerations

The SRV Position Indication System is designed to function in the normal operating environment, during and 30 days after a LOCA. Although the equipment is not environmentally qualified, the equipment is designed to withstand the postulated post-LOCA conditions in accordance with the guidance of Regulatory Guide 1.97. The Regulatory Guide recommends, but does not require environmental qualification (Category 2 Instrumentation "should be qualified in accordance with Regulatory Guide 1.89…), and none is required for this application. The SRV Position Indication system provides no post-accident monitoring function important to safety and only low-energy instrumentation circuits are located in the primary and secondary containment (harsh environment) areas. Because the indication is not important to safety and no failure of SRV position indication system components due to post-accident harsh environments can affect the integrity of the Class 1E power sources, environment qualification for postulated post-accident harsh environments is not required.

7.6.1b.2 Non-NSSS Process Radiation Monitoring System - Instrumentation and Controls

(1) Refueling floor wall exhaust radiation monitoring subsystem

(2) Refueling floor high exhaust radiation monitoring subsystem

(3) Railroad access shaft exhaust radiation monitoring subsystem (Unit 1 only)

(4) Emergency outside air intake radiation monitoring subsystem

(5) Standby gas treatment system exhaust vent radiation monitoring subsystem

The Main Steamline Radiation Subsystem is discussed in Subsection 7.3.1.1a.

Refer to Section 11.5 for Process Radiation Monitoring System description.

7.6.1b.2.1 Refueling Floor Wall Exhaust Radiation Monitoring Subsystem

This system is used to initiate reactor building isolation as described in Subsection 7.3.1.1b.6.

The instrumentation and controls of this system are described in Subsection 11.5.2.1.5.

7.6.1b.2.2 Refueling Floor High Exhaust Radiation Monitoring Subsystem

The description for this system is provided in Subsection 11.5.2.1.6.

The objective of this system is to detect excessive radiation levels above the fuel pool and initiate reactor building isolation as described in Subsection 7.3.1.1b.6.

7.6.1b.2.3 Railroad Access Shaft Exhaust Radiation Monitoring Subsystem

The radiation monitoring instrumentation is described in Subsection 11.5.2.1.7.

The initiation for reactor building isolation is documented in Subsection 9.4.2.1.

7.6.1b.2.4 Emergency Outside Air Intake Radiation Monitoring Subsystem

The instrumentation for this system is described in Subsection 11.5.2.1.8.

The emergency intake air supply system for the control structure is initiated by this system and is described in Subsection 7.3.1.1b.7.

7.6.1b.2.5 Standby Gas Treatment System Exhaust Vent Radiation Monitoring Subsystem

The description of the instrumentation and its function is provided in Subsection 11.5.2.1.4.

7.6.1b.3 Diesel Generator Initiation - Instrumentation and Controls

Interlocks between NSSS systems and non-NSSS systems in Unit 1 and 2 provide the initiation for the start of the diesel generators and are identified as follows:

Diesel Generator A Start Signal (one signal each from Units 1 and 2)

Diesel Generator B Start Signal (one signal each from Units 1 and 2)

Diesel Generator C Start Signal (one signal each from Units 1 and 2)

Diesel Generator D Start Signal (one signal each from Units 1 and 2)

Note: Whenever Diesel Generator 'E' is aligned for Diesel Generator A, B, C or D, Diesel Generator 'E' receives the start signal in place of the substituted diesel generator.

7.6.1b.3.1 Initiation

The initiation circuit for the diesel generator start signal originates in the NSSS system logic. High drywell pressure and/or low reactor water level, arranged in two instrument channels taken twice, will initiate each of the start circuits of the four aligned diesel generators. NSSS components in the RHR and core spray systems are utilized. Manual initiation of a RHR or core spray system will start the diesel associated with that system. Loss of offsite power also automatically initiates diesel start.

Individual manual start is also provided on the plant operating benchboard.

7.6.1b.3.2 Logic

Two NSSS instrument channels for each diesel must detect LOCA conditions to operate a NSSS output relay which in turn actuates the non-NSSS relay causing the diesel start.

7.6.1b.3.3 Bypasses

It is possible to bypass a diesel start actuation signal using a manual jack and a keylock switch. This action makes it possible to test the instrument sensing components and logic.

This action, which disables an automatic start of the diesels, is indicated on the bypass indication system panel. Refer to Subsection 7.5.1b.7.

7.6.1b.4 Drywell Entry Purge - Instrumentation and Controls (non-safety related function)

The drywell purge system represents a backup system to the hydrogen recombiner system for combustible gas control of the primary containment and suppression chamber. The system function is described in Subsection 6.2.5 and is not a safety related function other than containment isolation.

This system is manually operated by opening the air purge supply valves from the reactor building HVAC system. After opening the respective containment inboard isolation valves, the atmosphere of the primary containment and the suppression chamber can be exhausted through the 2 in. vent lines to the standby gas treatment system.

Operational considerations:

The containment air purge system can be used as:

a) A backup system for the hydrogen recombiners after a loss of coolant accident to reduce the hydrogen content by venting the containment atmosphere. This operating function is not safety related except the valves required to isolate containment.

b) The primary containment re-entry purge system for personnel access during shutdown and maintenance. This operating function is not safety related.

7.6.1b.4.1 Initiating Circuits, Logic, and Bypasses

All valves required for the containment air purge system can be controlled from the main control room. The valve logic is designed with momentary pushbuttons and electromechanical relays. No bypass capability is provided.

7.6.1b.4.2 Interlocks

All valves are part of the containment isolation function which is discussed in Section 7.3. The containment isolation signal will dictate the closure of these valves.

7.6.1b.4.3 Sequencing, Redundancy, and Diversity

No sequencing is provided. Redundancy and diversity is not a requirement for the containment air purge system.

7.6.2a ANALYSIS FOR NSSS - SYSTEMS

7.6.2a.1 Refueling Interlocks System - Instrumentation and Controls

See Subsection 7.7.2.10.

7.6.2a.2 Process Radiation Monitoring System - Instrumentation and Controls

7.6.2a.2.1 Main Steamline Radiation Monitoring Subsystem

The analysis for the Main Steamline Radiation Monitoring subsystem is discussed in Subsection 7.1.2a.1.11.1.

7.6.2a.2.1.1 General Functional Requirement Conformance

Refer to Subsection 7.1.2a.1.11.1.

7.6.2a.2.1.2 Specific Regulatory Requirement Conformance

Refer to Subsection 7.1.2a.1.11.1.2.

7.6.2a.3 High Pressure/Low Pressure Interlock Protection and Control System

7.6.2a.3.1 General Functional Requirements Conformance

The high pressure/low pressure interlocks provide an interface between low pressure systems and reactor pressure. When reactor pressure is low enough as to not be harmful to the low pressure systems, the valves open exposing the low pressure system to reactor pressure. The interlocks are automatic and the operator is given indication of their status.

7.6.2a.3.2 Specific Regulatory Requirements Conformance

7.6.2a.3.2.1 General Design Criteria Conformance

There are no General Design Criteria that apply to the high pressure/low pressure interlocks.

7.6.2a.3.2.2 IEEE Standards Conformance

7.6.2a.3.2.2.1 Conformance to IEEE Standard 279-1971

The interlocks are designed in accordance with the single failure criterion, redundancy requirements, and testability criterion.

7.6.2a.3.2.2.2 Conformance to IEEE Standard 338-1971

The design of the interlocks is such that they can be tested during reactor operation except for the actuated devices (valves). The valves can be tested during startup and shutdown.

7.6.2a.3.2.2.3 Conformance to IEEE Standard 379-1972

Two valves in each low pressure system process line and separate actuation paths assure that the interlocks comply with the single failure criterion.

7.6.2a.3.2.3 Regulatory Guide Conformance

7.6.2a.3.2.3.1 Conformance to Regulatory Guide 1.22

See Subsection 7.6.2a.3.2.2.2 on conformance to IEEE Standard 338-1971.

7.6.2a.3.2.3.2 Conformance to Regulatory Guide 1.53

See Subsection 7.6.2a.3.2.2.3 on conformance to IEEE Standard 379-1972.

7.6.2a.4 NSSS Leak Detection System - Instrumentation and Controls

7.6.2a.4.1 General Functional Requirements Conformance

The part of NSSS leak detection system instrumentation and controls that is related to the various subsystem isolation circuitry is designed to meet requirements of the containment and reactor vessel isolation control systems cited in Subsection 7.3.2a.2.

7.6.2a.4.2 Specific Regulatory Requirements Conformance

7.6.2a.4.2.1 Regulatory Guides Conformance

Regulatory Guide 1.22 (2/72)

The portion of the leak detection subsystem that provides outputs to the system isolation logic is designed so that complete periodic testing of the isolation system actuation function is provided. This is accomplished by tripping the leak detection system one channel at a time from the backrow leak detection panel in the main control room. An indicator lamp is provided to show that the particular channel is tripped. Discussion is provided in Subsection 7.3.2a.2.2.1.2.

Regulatory Guide 1.47 (5/73)

The leak detection system annunciates all bypass conditions. Discussion is provided in Subsection 7.3.2a.2.2.1.5.

Regulatory Guide 1.53 (6/73)

The leak detection system complies with this guide. Discussion is provided in Subsection 7.3.2a.2.1.6.

7.6.2a.4.2.2 Regulation Conformance

10CFR50 Appendix A

Discussion is provided in Subsection 7.3.2a.2.2.2.

Criterion 13

The leak detection sensors and associated electronics are designed to monitor the reactor coolant leakage over all expected ranges required for the safety of the plant.

Automatic initiation of the system isolation action, reliability, testability, independence, and separation have been factored into leak detection design as required for isolation systems.

Criterion 19

Controls and instrumentation are provided in the control room.

Criterion 20

Leak detection equipment senses accident conditions and initiates the containment and reactor vessel isolation control system when appropriate.

Criterion 21

Protection related equipment is arranged in two redundant divisions and maintained separately. Testing is covered in the conformance discussion for Regulatory Guide 1.22.

Criterion 22

Protection related equipment is arranged in two redundant divisions so no single failure can prevent isolation. Functional diversity of sensed variables is utilized.

Criterion 23

MSIV and Other Isolation Valves: The system logic and actuator signals are fail safe. The motor operated valves will fail "as-is" on loss of power, steam leak subsystem temperature switches excluded. Temperature switches fail open (non fail-safe), to negate spurious closure of isolation valves. Reliance is placed on other leak detection instruments.

Criterion 24

The system has no control functions.

Criterion 29

No anticipated operational occurrence can prevent an isolation.

Criterion 30

The system provides means for detection and generally locating the source of reactor coolant leakage.

Criterion 33

The leak detection total leakage limitations are confined to conservative levels far below the coolant makeup capacity of the RCIC system.

Criterion 34

Leak detection is provided for the RHR shutdown cooling and RCIC lines penetrating the drywell.

Criterion 35

ECCS leak detection is augmented by the sump monitoring system portion of the leak detection system. ECCS leaks can easily be identified by operator correlation of various flow, pressure and reactor vessel level signals transmitted to the control room.

Criterion 54

Leak detection is provided for main steam, HPCI, RCIC, RHR shutdown cooling and reactor water cleanup lines penetrating the drywell. Sump fill rate monitoring provides leak detection for other pipes penetrating the drywell and reactor buildings.

7.6.2a.4.2.3 Industry Standards Conformance

IEEE 279-1971 and 379-1972

Leak detection system isolation functions compliance with IEEE 279-1971 and 379-1972 is included in the IEEE 279 and 379 compliance discussions of the PCRVICS, Subsections 7.3.2a.2.2.3.1 and 7.3.2a.2.2.3.6, for which this system provides logic trip signals. Compliance to IEEE-279-1971 for HPCI and RCIC Leak Detection is discussed in Sections 7.3.2a.1.2.3.1.2 and 7.4.1.1.3.6.

IEEE 323-1971

Leak detection compliance is shown in Subsection 7.1.2.5.3.

IEEE 338-1971

Leak detection complies with IEEE 338-1971. All active components of the leak detection system associated with the isolation signal can be tested during plant operation.

IEEE 344-1971

Leak detection system compliance is shown in Section 3.10.

7.6.2a.5 Neutron Monitoring System - Instrumentation and Controls

7.6.2a.5.1 Source Range Monitor Subsystem

The SRM is a non-safety subsystem. See Subsection 7.7.2.13.

7.6.2a.5.2 Intermediate Range Monitor Subsystem

7.6.2a.5.2.1 General Functional Requirements Conformance

The analysis for the RPS trip inputs from the Intermediate Range Monitor Subsystem are discussed in Subsection 7.2.2.

The IRM is the primary source of information as the reactor approaches the power range. Its linear steps (approximately a half decade) and the rod blocking features on both high flux level and low flux level require that, unless one channel is bypassed, all the IRMs are on the correct range as core reactivity is increased by rod withdrawal. The SRM overlaps the IRM. The sensitivity of the IRM is such that the IRM is on scale on the least sensitive (highest) range with approximately 15% reactor power.

The number and locations of the IRM detectors have been determined to provide sufficient intermediate range neutron flux level information under the worst permitted bypass conditions. To assure that each IRM is on the correct range, a rod block is initiated any time the IRM is both downscale and not on the most sensitive (lowest) scale. A rod block is initiated if the IRM detectors are not fully inserted in the core unless the reactor mode switch is in the RUN position. The IRM scram trips and the IRM rod block trips are automatically bypassed when the reactor mode switch is in the RUN position.

The IRM detectors and electronics have been tested under operating conditions and verified to have the operational characteristics described. They provide the level of precision and reliability required by the RPS safety design bases.

7.6.2a.5.2.2 Specific Regulatory Requirement Conformance

IEEE 279-1971

The IRM design is shown to comply with the design requirements of IEEE-279 in Subsection 7.2.2.1.2.3.1.

IEEE 323-1971

IRM compliance is shown in Subsection 7.1.2.5.3.

IEEE 338-1971

IRM compliance with IEEE 338 is shown in Subsections 7.2.2.1.2.3.1.9 and 7.2.2.1.2.3.1.10 under IEEE 279 Conformance.

IEEE 344-1971

The IRMs are qualified for seismic events. Compliance is further shown in Section 3.10.

IEEE 379-1972

IRM signal separation, cabinet separation, use of isolation circuitry, and number of channels per trip system are methods used to meet the single-failure criterion. Convenient test and calibration circuits permit frequent checks for undetected failures.

Regulatory Guide 1.22 (2/72)

The portion of the IRM subsystem that provides outputs to the Reactor Protection System is designed to provide complete periodic testing of Protection System Actuation Function as desired. The provision is accomplished by initiating an output trip of one IRM channel at any given time which will result in tripping one of the two RPS trip systems. Details are provided in Subsection 7.2.2.1.2.1.2.

Operator indication of IRM bypass is provided by indicator lamps.

Regulatory Guide 1.47 (5/73)

The IRM complies with this Guide. Discussion is provided in Subsection 7.2.2.1.2.1.5.

Regulatory Guide 1.53 (6/73)

The IRM complies with this guide. Discussion is provided in Subsection 7.2.2.1.2.1.6.
10CFR50 Appendix A

Criteria 13, 19, 20, 21, 22, 23, 24, and 29

The IRM detectors and associated electronics are designed to monitor the in-core flux over all expected ranges required for safety of the plant.

Automatic initiation of protection system action, reliability, testability, independence, and separation have been factored into the IRM design as required for protection systems.

7.6.2a.5.3 Local Power Range Monitor Subsystem

7.6.2a.5.3.1 General Functional Requirement Conformance

The LPRM provides detailed information about neutron flux throughout the reactor core. The number of LPRM assemblies and their distribution is determined by extensive calculational and experimental procedures. The division of the LPRM into various groups for AC power supply allows operation with one AC power supply failed or out of service without limiting reactor operation. The LPRM power is derived redundantly from the two AC power supplies, one from each RPS 120 Vac bus, so that all LPRM signals continue to be available even with the complete loss of one AC power source. Individual failed chambers can be bypassed. Neutron flux information for a failed chamber location can be interpolated from nearby chambers. A substitute reading for a failed chamber can be derived from an octant-symmetric chamber, or an actual flux indication can be obtained by inserting a TIP to the failed chamber position. Each output is electrically isolated so that an event (grounding the signal or applying a stray voltage) on the reception end does not destroy the validity of the LPRM signal. Tests and experience attest to the ability of the detector to respond proportionally to the local neutron flux changes (Reference 7.6-1).

7.6.2a.5.3.2 Specific Regulatory Requirement Conformance

IEEE 279-1971

The large number of individual LPRM channels, physical separation of groups of LPRMs, and electrical separation of these groups of LPRMs allow the LPRM system to meet single failure, channel independence, and separation requirements. Equipment quality requirements are met by the qualification of the LPRM equipment.

IEEE 323-1971

LPRM equipment is qualified per the requirements of this standard.

IEEE 338-1971

LPRM equipment is designed so that individual channels may be taken out of service for test or calibration without affecting the remaining channels.

IEEE 344-1971

The LPRM equipment is designed and qualified to function during and after the design basis seismic event. See Section 3.10a.1 for further discussion of Seismic Qualification Criteria.

IEEE 379-1972

The LPRM equipment is designed so that a single failure will not prevent needed safety functions.

Regulatory Guide 1.66 (10/73)

The LPRM assembly dry tube will be nondestructively examined in accordance with ASTM and ASME requirements; however, it is exempt from the requirements of Regulatory Guide 1.66 under note 3 of Section C.

7.6.2a.5.4 Average Power Range Monitor Subsystem

The analysis for the Average Power Range Monitor Subsystem is discussed in Subsection 7.2.2.

7.6.2a.5.4.1 General Functional Requirement Conformance

Each APRM derives its signal from LPRM information. The assignment, power separation, cabinet separation, and LPRM signal isolation are in accord with the safety design bases of the RPS.

There are four APRM channels with the Reactor Protection System trip outputs from each routed to each of four APRM 2-out-of-4 voter channels. Two voter channels are associated with each Reactor Protection System trip system. This configuration allows one APRM channel to be bypassed plus one failure while still meeting the Reactor Protection System safety design basis.

Above a plant power level defined by Technical Specifications, the APRM power (and simulated thermal power) is adjusted periodically based on heat balance. This adjustment is made regularly at a rate sufficient to compensate for LPRM burnup and the related change in APRM values. However, coolant flow changes, control rod movements, and failed or bypassed LPRM inputs can also affect the relationship between APRM measured flux and reactor power. These predictable APRM variations are included in the analysis performed to determine minimum number of LPRM inputs required to be operable in order for the APRM channel to be operable. The analysis is performed, considering worst case combinations of failed LPRM inputs, at rated conditions by assuming both continuous withdrawal of the maximum worth control rod and reduction of recirculation flow to 40% of rated flow. The minimum number of LPRM inputs for an APRM is determined such that the average of the remaining operable LPRM inputs still allows the APRM to track power excursions within the acceptance criteria assumed in plant safety analysis. If the number of operable LPRMs is less than the required minimum, the APRM channel is declared inoperable.

There is also a minimum cells requirement applied to the OPRM upscale function. The minimum number of OPRM cells per APRM channel is established to ensure that thermal-hydraulic instabilities can be detected within the limits of the OPRM licensing methodology. If the number of cells is less that the required minimum, an OPRM/APRM trouble alarm is provided and the channel is declared inoperable.

The flow-referenced APRM scram Setpoint does not perform a protective function as demonstrated in Chapter 15.0.

7.6.2a.5.4.2 Specific Regulatory Requirement Conformance

Regulatory Guide 1.22

The portion of the APRM subsystem that provides outputs to the Reactor Protection System is designed to provide complete periodic testing of Protection System Actuation Functions. This provision is accomplished by initiating an output trip of one APRM channel at any given time which will result in tripping one of the two RPS trip systems. Details are provided in Subsection 7.2.2.1.2.1.2.

Operator indication of APRM bypass is provided by indicator lamps.

Regulatory Guide 1.47

The APRM complies with this guide. Discussion is provided in Subsection 7.2.2.1.2.1.5.
10CFR50, Appendix A

Criteria 13, 19, 20, 21, 22, 23, 24, and 29

The APRM detection and associated electronics are designed to monitor the in-core flux over all expected ranges required for safety of the plant.

Automatic initiation of protection system action, reliability, testability, independence, and separation have been factored into the APRM design as required for protection systems.

IEEE 279-1971

The APRM design is shown to comply with the design requirements of IEEE-279 in Subsection 7.2.2.1.2.3.1.

IEEE 323-1971

APRM compliance is shown in Subsection 7.1.2.5.3.

IEEE 338-1971

APRM compliance with IEEE 338 is shown in Subsections 7.2.2.1.2.3.1.9 and 7.2.2.1.2.3.1.10 under IEEE 279 Conformance.

IEEE 379-1972

LPRM signal separation, cabinet separation, use of isolation circuitry and number of channels per trip system are methods used to meet the single failure criterion. Convenient test and calibration circuits permit frequent checks for undetected failures.

7.6.2a.5.5 Rod Block Monitor Subsystem

See Subsection 7.7.2.11.

7.6.2a.5.6 Traversing In-Core Probe Subsystem (TIPS)

The analysis for the Traversing In-Core Probe Subsystem is discussed in Subsection 7.7.2.6.

7.6.2a.6 Rod Block Trip - Instrumentation and Controls

See Subsection 7.7.2.2.3.

7.6.2a.7 Not Used

7.6.2a.8 Recirculation Pump Trip System

7.6.2a.8.1 General Functional Requirements Conformance

The RPT system is designed to aid the RPS in protecting the integrity of the fuel barrier. Turbine stop valve closure or turbine control valve fast closure will initiate a scram and recirculation pump trip in time to keep the core within the thermal-hydraulic safety limit during operational transients (see Table 7.2-1 and the Technical Specifications). The response time requirements for these variables are identified in Table 7.6-10.

Recirculation pump trip is a two-out-of-two logic system for the turbine control valve and the turbine stop valve with a permissive for reactor power above 26% rated. Each of the logic channels is initiated by logic from the RPS system, which requires a two-out-of-two confirmation of the sensed variable. A trip of the sensed variable in any two divisions will result in a trip initiate signal for all recirculation pumps.

Failure to repair in a single RPS division will not violate single-failure criteria. Channel bypass switches will be provided. The switches will provide a "tripped" input to the recirculation pump trip logic. Sensors, channels, and logics of the RPT system are not used directly for automatic control or process systems. Therefore, failure in the controls and instrumentation of process systems cannot induce failure of any portion of the system. Design of the system to safety class requirements and the redundance of Class 1E power supplies as breaker trip sources assures actuation of the pump trip function if required during design-basis earthquake ground motion.

Operator verification that two-pump trip has occurred may be made by observing one or more of the following functions:

(1) recirculation flow indicators in the control room

(2) breaker trip indicating lights on the Reactor Protection System Divisional Logic Control Panels

(3) recirculation pump trip System A and System B trip annunciation (two windows)

7.6.2a.8.2 Specific Regulatory Requirement Conformance (IEEE 279-1971)

General Functional Requirement (IEEE 279-1971, Paragraph 4.1)

Two instrument channels are connected to both division logics. In the division logics, the channels lose their identity since they are combined. The combination is two-out-of-two. When both instrument channels inputting a common divisional logic and monitoring the same variable exceed their setpoint, RPT will occur if an inhibit is not present (see 7.2.1 and the Technical Specifications).

Single-Failure Criterion (IEEE 279-1971, Paragraph 4.2)

The design complies.
Quality of Components and Modules (IEEE 279-1971, Paragraph 4.3)

Individual components are procured to specifications which satisfy the applicable operational and environmental conditions. Sensors and associated equipment are highly reliable and the components are of a quality that is consistent with minimum maintenance requirements and low failure rate. The primary trip channels and division logic elements incorporate high reliability relays. See the Susquehanna SES Environmental Report for Class 1E Equipment.

Equipment Qualification (IEEE 279, Paragraph 4.4)

Manufacturer and plant startup test data or reasonable engineering extrapolation based on test data is available to verify that equipment which must operate to provide protection system action will meet, on a continuing basis, the performance requirements determined to be necessary for achieving the system requirements. See the Susquehanna SES Environmental Qualification Report for Class 1E Equipment.

Channel Integrity (IEEE 279-1971, Paragraph 4.5)

The logic system complies with this requirement.

Channel Independence (IEEE 279, Paragraph 4.6)

The two-division arrangement meets this requirement.

Control and Protection System Interaction (IEEE 279, Paragraph 4.7)

The two division logics are totally separate from any non-protection system. Due to the design of this output and separation of the cabling, there is no interaction with control systems of the plant. The actuator logic has no interaction with any other plant system, and the breaker trips are physically separate and electrically isolated from the other portions of the recirculation pump power supply. Consequently, this design requirement is met by this equipment. Any system interlocks to control systems will only be isolated such that no failure or combination of failures will have any effect on RPT.

Derivation of System Inputs (IEEE 279, Paragraph 4.8)

This design requirement is met by the use of sensors that detect valve motion or valve hydraulic pressure switch charge of state.

Capability for Sensor Checks (IEEE 279, Paragraph 4.9)

The system input sensors and four division system logics are capable of being checked one channel or division at a time. The sensors and logic test or calibration during power operation does not initiate pump trip action at the system level.

Capability for Test and Calibration (IEEE 279, Paragraph 4.10)

Capability is provided for testing and calibrating the system logic quarterly and circuit breakers once per refueling outage.

Channel Bypass or Removal from Operation (IEEE 279, Paragraph 4.11)

Refer to Subsection 7.2.2.1.2.3.1.11.

Operating Bypasses (IEEE 279, Paragraph 4.12)

Refer to Subsection 7.2.2.1.2.3.1.12.

Indication of Bypasses (IEEE 279, Paragraph 4.13)

This design requirement is complied with by annunciation of bypass and system out of service.

Access to Means for Bypassing (IEEE 279, Paragraph 4.14)

This design requirement is complied with by use of key-lock switches.

Multiple Setpoints (IEEE 279, Paragraph 4.15)

There are no multiple setpoints associated with the RPT.

Completion of Protective Action Once It Is Initiated (IEEE 279, Paragraph 4.16)

Once the RPT relays are tripped, they in turn trip the trip coils of the recirculation pump breakers.

Manual Actuation (IEEE 279, Paragraph 4.17)

Manual activation is provided in the recirculation system.

Access to Setpoint Adjustments, Calibration, and Test Points (IEEE 279, Paragraph 4.18)

This design requirement is met. See Subsection 7.2.2.1.2.3.1.18.

Identification of Protective Actions (IEEE 279, Paragraph 4.19)

Control room annunciators are provided to identify the tripped portions of RPT in addition to the previously described instrument channel annunciators associated with the RPS:

(1) Division 1 logic tripped, and

(2) Division 2 logic tripped.

These same functions are connected to the process computer to provide a typed record of the system status.

Information Readout (IEEE 279, Paragraph 4.20)

The Recirculation Pump Trip system is designed to provide the operator with accurate, complete and timely information pertinent to the system status. Indicators and annunciators are provided for system input trip signals, initiation signal at system level, the status of trip coils and the mechanical position of the circuit breakers.

Systems Repair (IEEE 279, Paragraph 4.21)

The Recirculation Pump Trip System is designed to facilitate the recognition, location, replacement, repair, or adjustment of malfunctioning components or modules.

Identification of Protection Systems (IEEE 279, Paragraph 4.22)

Refer to Subsection 7.2.2.1.2.3.1.22.

IEEE 308 - 1974

This does not apply to the logic system, which is fail safe. Its power supplies are thus unnecessary for RPT. A Class 1E system is required to energize the breaker trip coils.

IEEE 323 - 1971

See Subsection 7.1.2.5.

IEEE 338 - 1971

Refer to Subsection 7.2.2.1.2.3.6.

IEEE 344 - 1971

All Class 1E Equipment will meet the requirements of Subsection 3.10.

IEEE 379-1972

These requirements are satisfied by consideration of the different types of failure and carefully designing all violations of the single-failure criterion out of the system. An exception is imposed during periodic logic testing.

Regulatory Guides

Regulatory Guide 1.22

The system is designed so that it may be tested during plant operation from sensor device to final actuator logic. Circuit breaker shall be tested as per the plant Technical Specifications.

Regulatory Guide 1.47

Regulatory Positions C.1, C.2 and C.3

Annunciation will be provided to indicate a part of a system is not operable. The system has annunciators lighting and sounding whenever one or more instrument channels are manually bypassed. Bypassing is not allowed in the trip logic or actuator logic.

All bypass and inoperability annunciators both at the division level and the component level will be grouped for operational convenience. As a result of design, preoperational testing, and startup testing, no erroneous bypass indication is anticipated.

These indication provisions serve to supplement administrative controls and aid the operator in assessing the availability of component and system level protective actions. This indication does not perform functions that are essential to the health and safety of the public.

All circuits will be electrically independent of the plant safety systems to prevent the possibility of adverse effects. The annunciator initiation signals are provided through isolation devices and can in no way prevent protective actions. Testing will be included on a periodic basis when equipment associated with the annunciation is tested.

Regulatory Guide 1.53

Compliance with Regulatory Guide 1.53 is by specifying, designing, and constructing the reactor protection system to meet the single-failure criterion (Section 4.2 of IEEE 279-1971 and IEEE 379-1972). Redundant sensors are used and the logic is arranged to ensure that a failure in a sensing element or the division logic or an actuator will not prevent RPT. Separate channels are employed, so that a fault affecting one channel will not prevent the other channel from operating properly. Specifications are provided to define channel separation for wiring not included with NSSS supplied equipment.

10CFR50 Appendix A - General Design Criteria

(1) Criterion 13 - Each system input is monitored and annunciated.

(2) Criterion 19 - Controls and instrumentation are provided in the control room.

(3) Criterion 20 - The system constantly monitors the appropriate plant variables and initiates an RPT automatically when the variables exceed setpoints.

(4) Criterion 21 - The system is designed with four independent and separated instrument channels and two independent and separate output divisions. No single failure or operator action can prevent RPT. The instrument and logic can be tested during plant operation to assure its availability.

(5) Criterion 22 - The redundant portions of the system are separated such that no single failure or credible natural disaster can prevent a trip.

(6) Criterion 23 - Where the system is not fail safe, redundant Class 1E sources are utilized. Loss of an air supply will not prevent a scram. Postulated adverse environments will not prevent a scram.

(7) Criterion 24 - The system has no control function. Signals for control room annunciation are isolated.

(8) Criterion 29 - The system is highly reliable so that it will trip in the event of the anticipated operational occurrences.

7.6.2a.9 Process Computer System-Rod Worth Minimizer (RWM) – Instrumentation and Controls

See Subsection 7.7.2.2.5.

7.6.2a.10 Additional Design Considerations Analyses

7.6.2a.10.1 General Plant Safety Analyses

The examination of the subject safety systems at the plant safety analyses level is presented in Chapter 15 and Appendix 15A.

7.6.2a.10.2 Cold Water Slug Injection

Refer to Subsection 15.5.1.

7.6.2a.10.3 Refueling Accidents

Refer to Subsection 15.7.4.

7.6.2a.10.4 Overpressurization of Low Pressure System

Refer to Subsection 7.6.1a.3.

7.6.2b ANALYSIS FOR NON-NSSS SYSTEMS

7.6.2b.1 General Functional Requirement Conformance

a) Containment Atmosphere Monitoring System

This system does not perform any controlling function; it does provide indications and alarms in the control room.

b) Process and Effluent Radiological Monitoring System

The radiation monitoring systems described in Subsection 7.6.1b.2 are monitoring the radiation releases to the environment. In this function they provide the initiation signal for reactor building isolation and start the emergency outside air intake system.

c) Diesel Generator Initiation

This system, initiated by NSSS system variables, starts each of the four aligned diesel generators and is designed to meet the requirements of an ESF system.

d) Drywell Entry Purge System

This system does not perform a safety-related function and is manually operated. The components used for this operation are designed for safety to conform to requirements for a containment isolation system.

e) Primary Containment High Radiation Monitoring System

This system monitors gross-gamma radiation during and after an accident in the primary containment.

Indication and recording are provided in the Control Room.

7.6.2b.2 Specific Requirements Conformance

The following discussions outline the conformance of non-NSSS systems to federal regulations, regulatory guides, and applicable standards.

a) 10CFR50 Appendix A

Criterion 1: All non-NSSS systems required for safety are designed and built in accordance with an established quality assurance program.

Criterion 2: Not applicable.

Criterion 3: All systems are designed to minimize the probability and effects of fires and explosions using non-combustible and heat-resistant materials.

Criterion 4: The structures and components of the systems are adequately protected against all expected environmental impact. Refer to Chapter 3 for definition of environmental conditions.

Criterion 5: The containment atmosphere monitoring system, the process radiation monitoring and the drywell re-entry system are unitized. No structures, systems, and components are shared.

The diesel generators are common to both units. The initiation can occur from either unit. For load-sharing refer to Chapter 8.

Criteria 10, 11, and 12: Not applicable.

Criterion 13: Instrumentation and controls are selected to operate within expected ranges required for safety of the plant for all anticipated operational considerations. Refer to Subsections 7.5.1b and 7.5.2b for details.
Criteria 14, 15, and 16: Not applicable.

Criteria 17 and 18: Refer to Chapter 8 for description of conformance to these criteria.

Criterion 19: All non-NSSS safety-related instrumentation can be controlled and monitored from the main control room. For display instrumentation refer to Subsections 7.5.1b and 7.5.2b.

Criterion 20: The process radiation monitoring and the diesel generator initiation circuits are initiating the operation of systems and components important to safety.

Criterion 21: High functional reliability and in-service testability are implemented in the design by redundant instrumentation.

Criteria 22-24: The responses to these criteria are described in the requirements of IEEE 279.

Criteria 25-40: Not applicable.

Criteria 41-43: The containment atmosphere monitoring system assists during containment atmosphere cleanup.

Criteria 44-46: Not applicable.

Criteria 50-57: Not applicable.

Criterion 60: The process and effluent radiation monitoring system is designed to control the releases of radioactive materials to the environment.

Criterion 61: The radiation monitoring equipment for the refueling floor and the refueling pool is designed in conformance with this criterion.

Criteria 62 and 63: Not applicable.

Criterion 64: The containment radiation monitoring system continuously samples the containment atmosphere to detect radioactivity.

The containment high range radiation monitoring system detects gross-gamma radiation inside the containment during and after an accident.

b) IEEE Standard 279-1971

Requirements

4.1 General Functional Requirements

The diesel generator initiation system does automatically initiate appropriate protective action.

4.2 Single Failure Criterion

The initiation circuits for the diesel generators are meeting the single failure criteria.

4.3 Quality of Components

Components for all safety-related instrumentation are designed to achieve a high level of quality. Quality control during design, manufacturing, inspection, calibration, and tests are performed to meet this requirement.

4.4 Equipment Qualification

Refer to Chapter 3.

4.5 Channel Integrity

Not applicable.

4.6 Channel Independence

All safety-related systems are divisionalized, where Division I is physically and electrically separate from Division II.

4.7 Control and Protection System Interaction

Controls and protection systems are separated. No interaction is possible.

4.8 Derivation of System Inputs

Inputs to the diesel generator initiation circuits are derived from NSSS systems output relays and off-site power monitors.

4.9 Capability of Sensor Checks

Sensors can be checked by perturbing the monitored variable, and by cross-checking between redundant instruments.

4.10 Capability for Test and Calibration

All instrument circuits can be tested and calibrated after bypassing of the signal.

4.11 Channel Bypass and Removal from Operation

See Subsection 7.6.1b for description of bypasses.

4.12 Operating Bypasses

No operating bypasses are performed.

4.13 Indication of Bypasses

Refer to Section 7.5.1b.7 for description of the bypass indication system for non-NSSS systems.

4.14 Access for Means of Bypasses

Refer to description in Section 7.5.1b.7.

4.15 Multiple Setpoints

Not used.

4.16 Completion of Protective Action Once It Is Initiated

This applies to the diesel generator initiation.

4.17 Manual Initiation

Refer to diesel generator initiation description in Subsection 7.6.1b.3.

4.18 Access to Setpoint Adjustment

All setpoints can be calibrated in the system panels.

4.19 Identification of Protective Action

Refer to Subsections 7.3.2a and 7.3.2b.

4.20 Information Read-Out

All safety-related displays are listed in Subsections 7.5.1b and 7.5.2b.

4.21 System Repair

The system's instrumentation uses modules and components that can be easily replaced and repaired.

4.22 Identification

All equipment, panels, modules, components, and cables of ESF and support systems are identified by tag numbers. Interconnecting cables are color coded on a division basis.

c) IEEE Standard 308-1974

The compliance with this standard is discussed in Chapter 8.

IEEE's Standard 308-1980

The Diesel Generator 'E' Facility is designed in accordance with IEEE 308-1980.

d) Conformance to Regulatory Guide 1.21

The radiation monitoring equipment is designed to measure the quantity of radioactive gases released, iodine releases, and particulate releases as required by this guide.

7.6.3 REFERENCES

7.6-1 Morgan, W.R., "In-Core Neutron Monitoring System for General Electric Boiling Water Reactors," APED-5706, November, 1968 (Rev. April, 1969).

7.6-2 Hatch 1 Amendment 7, June 24, 1969, pp. 7-3.0-1 and 7-5.0-1.

7.6-3 NEDC-32410P-A, “Nuclear Measurement Analysis and Control Power Range Neutron Monitor (NUMAC-PRNM) Retrofit Plus Option III Stability Trip Function”, October 1995.

7.6-4 NEDC-32410P-A Supplement 1, “Nuclear Measurement Analysis and Control Power Range Neutron Monitor (NUMAC-PRNM) Retrofit Plus Option III Stability Trip Function”, November 1997.

7.6-5 NEDO-31960-A and NEDO-31960-A, Supplement 1, "BWR Owners’ Group Long-Term Stability Solutions Licensing Methodology,” November 1995.

7.6-6 NEDO-32465-A, "BWR Owners’ Group Long-Term Stability Detect and Suppress Solutions Licensing Basis Methodology And Reload Applications,” August 1996.

TABLE 7.6-3

IRM TRIPS

Trip Function [1]	Normal Set Point*	Trip Action
IRM Upscale (Trip)		Scram, annunciator, red light display
or IRM inoperative		Scram, rod block, annunciator, red light display
IRM upscale (Alarm)		Rod block, annunciator, amber light display
IRM downscale		Rod block (exception on most sensitive scale), annunciator, amber light display
IRM bypassed		White light display

Note: IRM is inoperative if module interlock chain is broken, operate-calibrate switch is not in operate position, or detector polarizing voltage is below 80 V.

* See the Technical Specifications

[1] Trip functions all provide input to the plant computer

TABLE 7.6-4

LPRM SYSTEM TRIPS

TRIP FUNCTION	TRIP RANGE	TRIP SET* POINT	TRIP ACTION
LPRM downscale	0% to full scale		ODA indication and annunciator
LPRM upscale	0% to full scale		ODA indication and annunciator
LPRM bypass	Manual switch		ODA indication and APRM averaging compensations

* See the Technical Specifications

TABLE 7.6-5

APRM SYSTEM TRIPS[1]

TRIP FUNCTION	TRIP POINT RANGE	ACTION
APRM Downscale Rod Block [4]	0% to full-scale	Rod block, annunciator, APRM ODA, white light
APRM Simulated Thermal Power[2] - Upscale (Setdown) Rod Block [4]	7% to 27%	Rod Block, annunciator, APRM ODA, amber light
APRM Neutron Flux - Upscale Rod Block [4]	10% to full scale	Rod Block annunciator, APRM ODA, amber light
APRM Simulated Thermal Power[2] - Upscale Rod Block [4]	Varied with flow; intercept and slope adjustable	Rod Block, annunciator, APRM ODA, amber light
APRM Simulated Thermal Power[2] -High Trip [4]	Varied with flow; intercept and slope adjustable	Scram, annunciator, APRM ODA, red light
APRM Neutron Flux - High Trip [4]	10% to full scale	Scram, annunciator, APRM ODA, red light
APRM Neutron Flux - High (Setdown) Trip [4]	10% to 30%	Scram, annunciator, APRM ODA, red light
APRM Inoperative Trip [4]	Chassis mode switch, module interlocks open, or self-test	Scram, rod block, annunciator, APRM ODA, red light
APRM Bypass [4]	Manual switch	White light

[1]See plant Technical Specifications for setpoints.

[2]APRM signal passes through a 6 ± 1 second time constant filter simulate heat flux prior to comparison.

[3]Same red light display.

[4]Trip function provides input to the plant computer.

Table 7.6-7

OPRM SYSTEM TRIP

TRIP FUNCTION	TRIP POINT RANGE	ACTION
OPRM Trip	Period Based Detection Algorithm based on cycle-specific analysis, documented in the COLR Backup trip algorithm setpoints are documented in the Technical Requirements Manual	Scram, annunciator, APRM ODA, red-light display Scram, annunciator, red-light display
OPRM Bypass[1]	Keylock Switch	White light
OPRM Inoperative	Same as APRM inoperative. See Table 7.6-5	Annunciator
OPRM Alarm	High Confirmation count (20)	Annunciator, APRM ODA

[1] OPRM bypass accomplished using APRM bypass switch.

TABLE 7.6-9

Suppression Pool Temperature Sensor Locations

Azimuth	Radius
36°30'	34'-6"
38°	34'-6"
100°30'	44'
102°	44'
141°30'	34'-6"
143°	34'-6"
179°	44'
180°30'	44'
216°30'	34'-6"
218°	34'-6"
268°30'	44'
270°	44'
318°	34'-6"
319°30'	34'-6"
348°30'	44'
350°	44'

TABLE 7.6-10

END-OF-CYCLE RECIRCULATION PUMP TRIP SYSTEM RESPONSE TIME

TRIP FUNCTION	RESPONSE TIME (Milliseconds)
1. Turbine Stop Valve-Closure	≤ 175*
2. Turbine Control Valve-Fast Closure	≤ 175

* Twenty milliseconds allotted for initial valve motion to valve limit switch initiation.

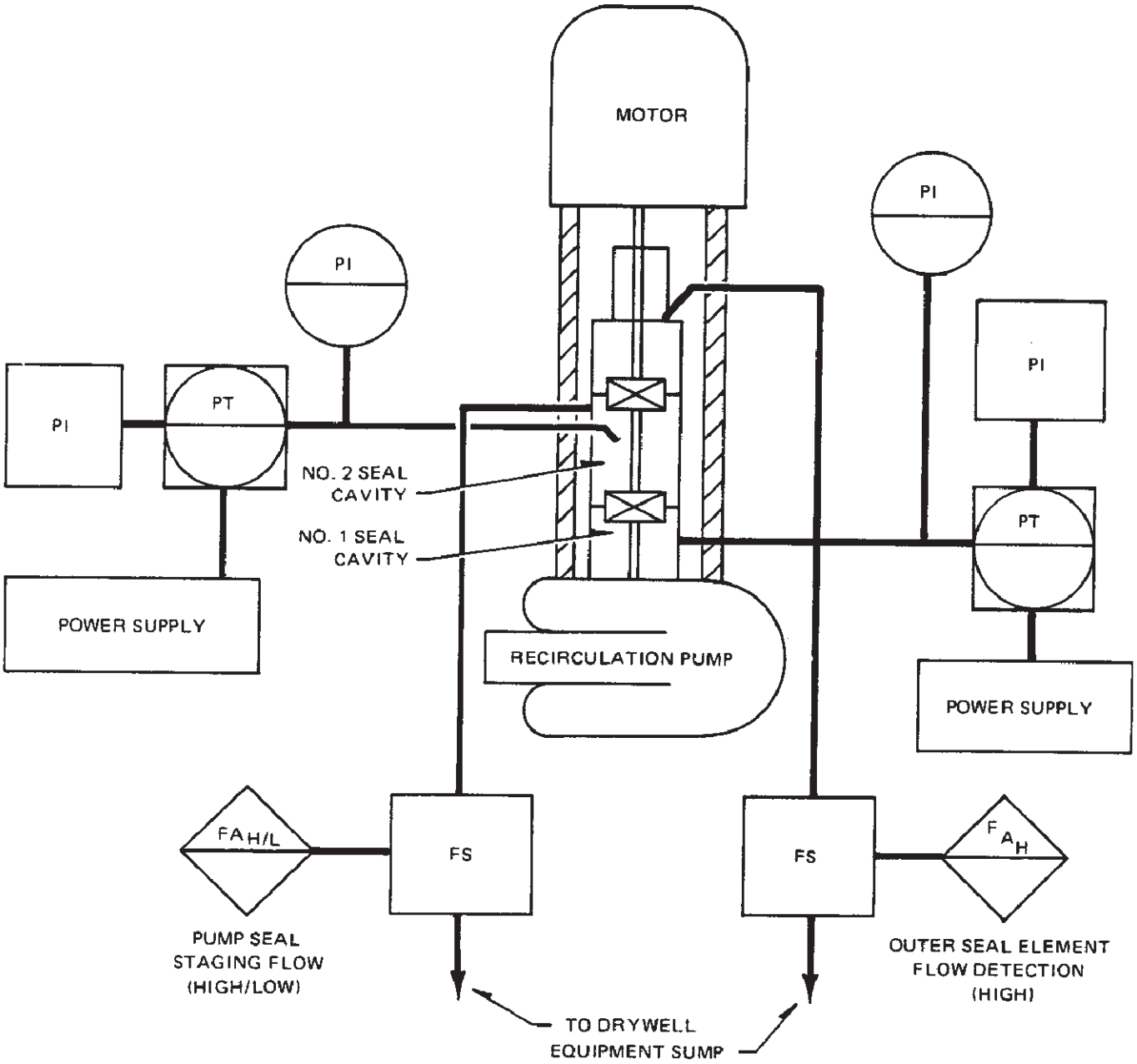

FSAR REV.65

SUSQUEHANNA STEAM ELECTRIC STATION
UNITS 1 & 2
FINAL SAFETY ANALYSIS REPORT

RECIRCULATION PUMP LEAK
DETECTION BLOCK DIAGRAM

FIGURE 7.6-1, Rev 49

AutoCAD: Figure Fsar 7_6_1.dwg

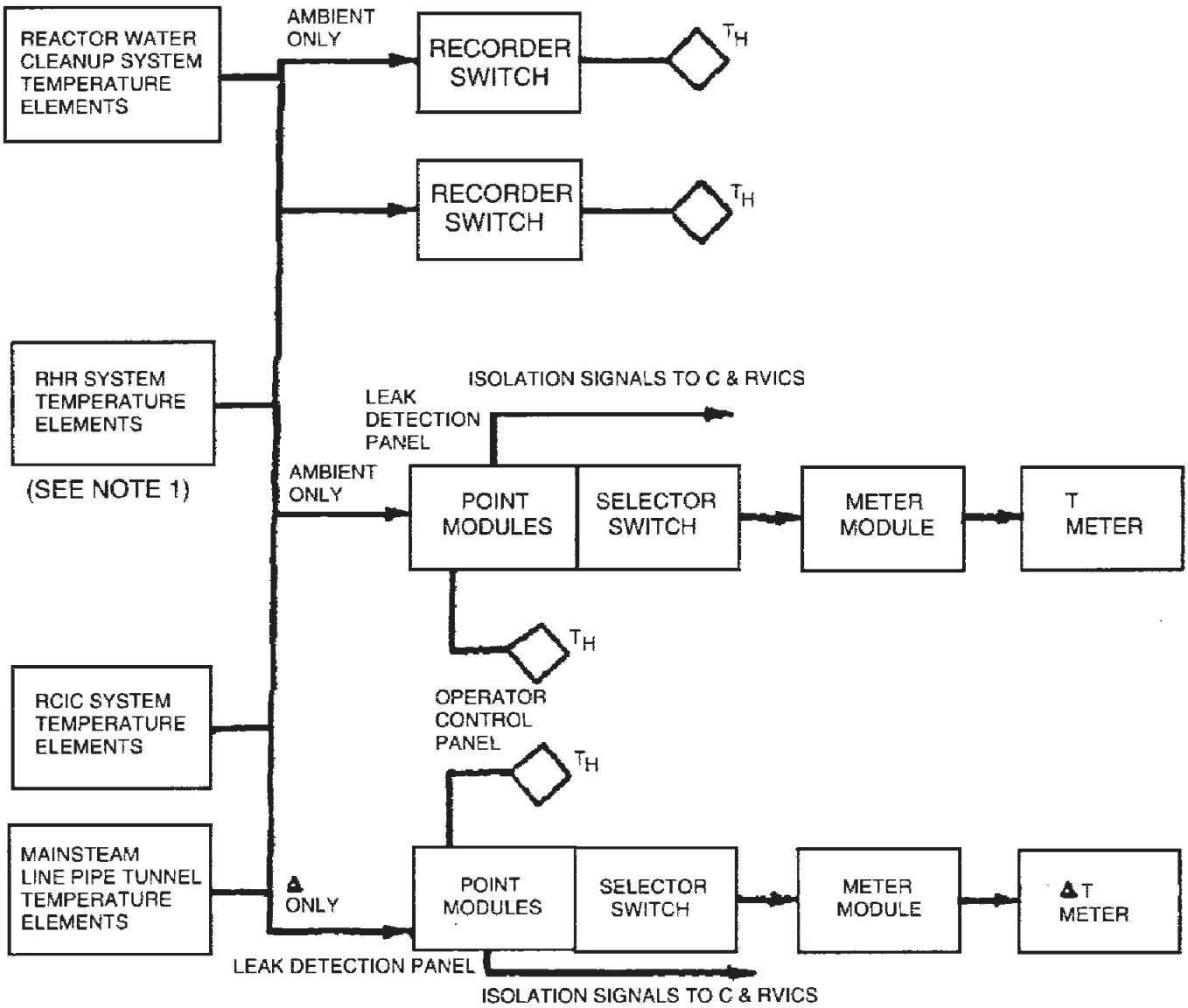

NOTE:
1. UNIT 1 RHR PERFORMS ALARM ONLY.

FSAR REV.65

SUSQUEHANNA STEAM ELECTRIC STATION
UNITS 1 & 2
FINAL SAFETY ANALYSIS REPORT

RHR AREA TEMPERATURE
MONITORING SYSTEM BLOCK
DIAGRAM

FIGURE 7.6-2, Rev 50

AutoCAD: Figure Fsar 7_6_2.dwg

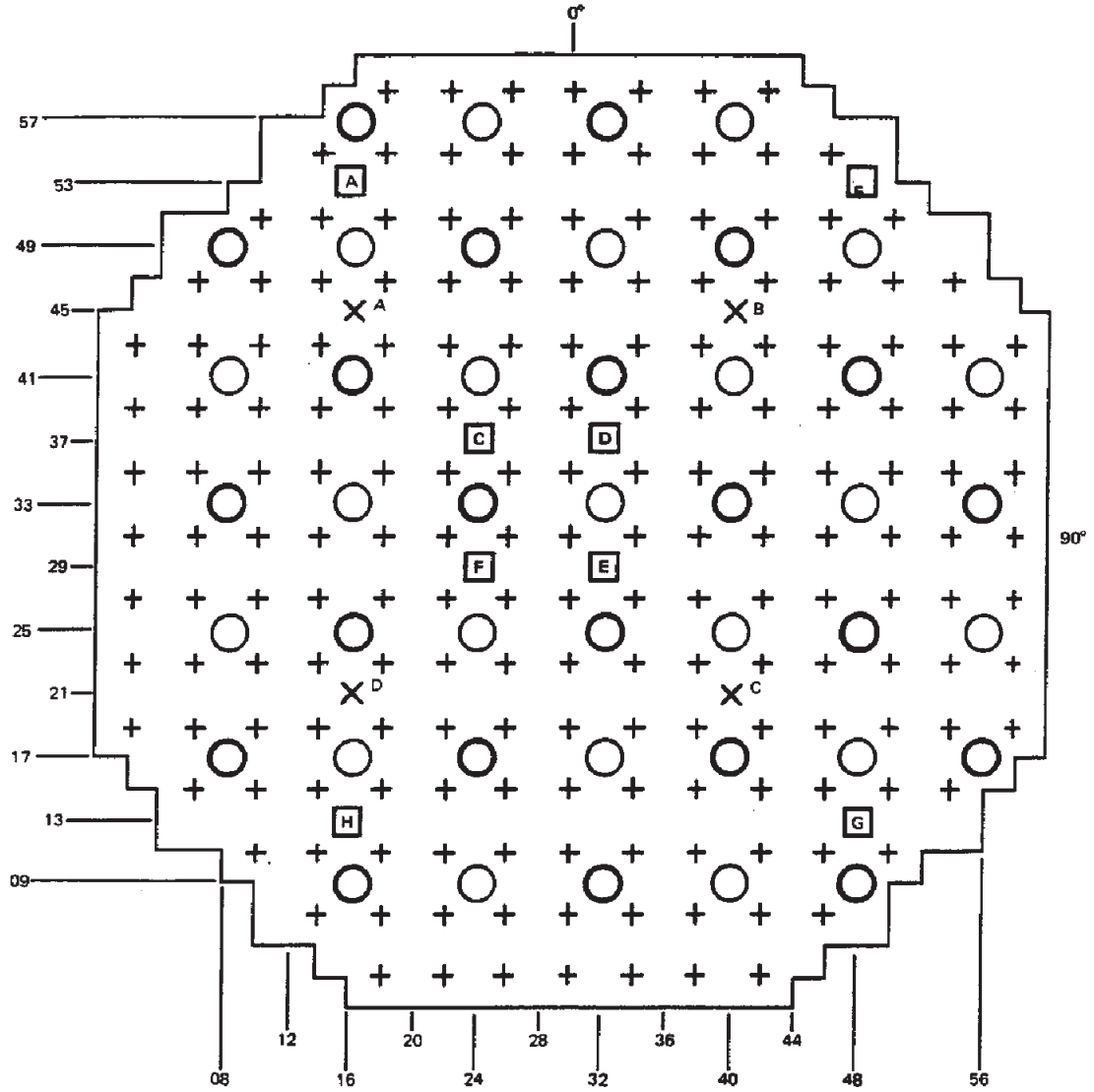

DETECTOR AND CONTROL ELEMENT ARRANGEMENT (TOP VIEW OF CORE)

+	CONTROL ROD
×	SRM DETECTOR (4)
□	IRM DETECTOR (8)
○	POWER RANGE DETECTOR ASSEMBLIES WITH LPRM DETECTORS USED IN REACTOR PROTECTION SYSTEM TRIP SYSTEM A (21)
○	POWER RANGE DETECTOR ASSEMBLIES WITH LPRM DETECTORS USED IN REACTOR PROTECTION SYSTEM TRIP SYSTEM B (22)

TOTAL PENETRATIONS FOR NUCLEAR INSTRUMENTS (55)

FSAR REV.65

SUSQUEHANNA STEAM ELECTRIC STATION
UNITS 1 & 2
FINAL SAFETY ANALYSIS REPORT

VESSEL PENETRATIONS
FOR NUCLEAR INSTRUMENTATION

FIGURE 7.6-3, Rev 49

AutoCAD: Figure Fsar 7_6_3.dwg

FIGURE 7.6-4-1 REPLACED BY DWG. M1-C51-35, SH. 1

FIGURE 7.6-4-2 REPLACED BY DWG. M1-C51-35, SH. 2

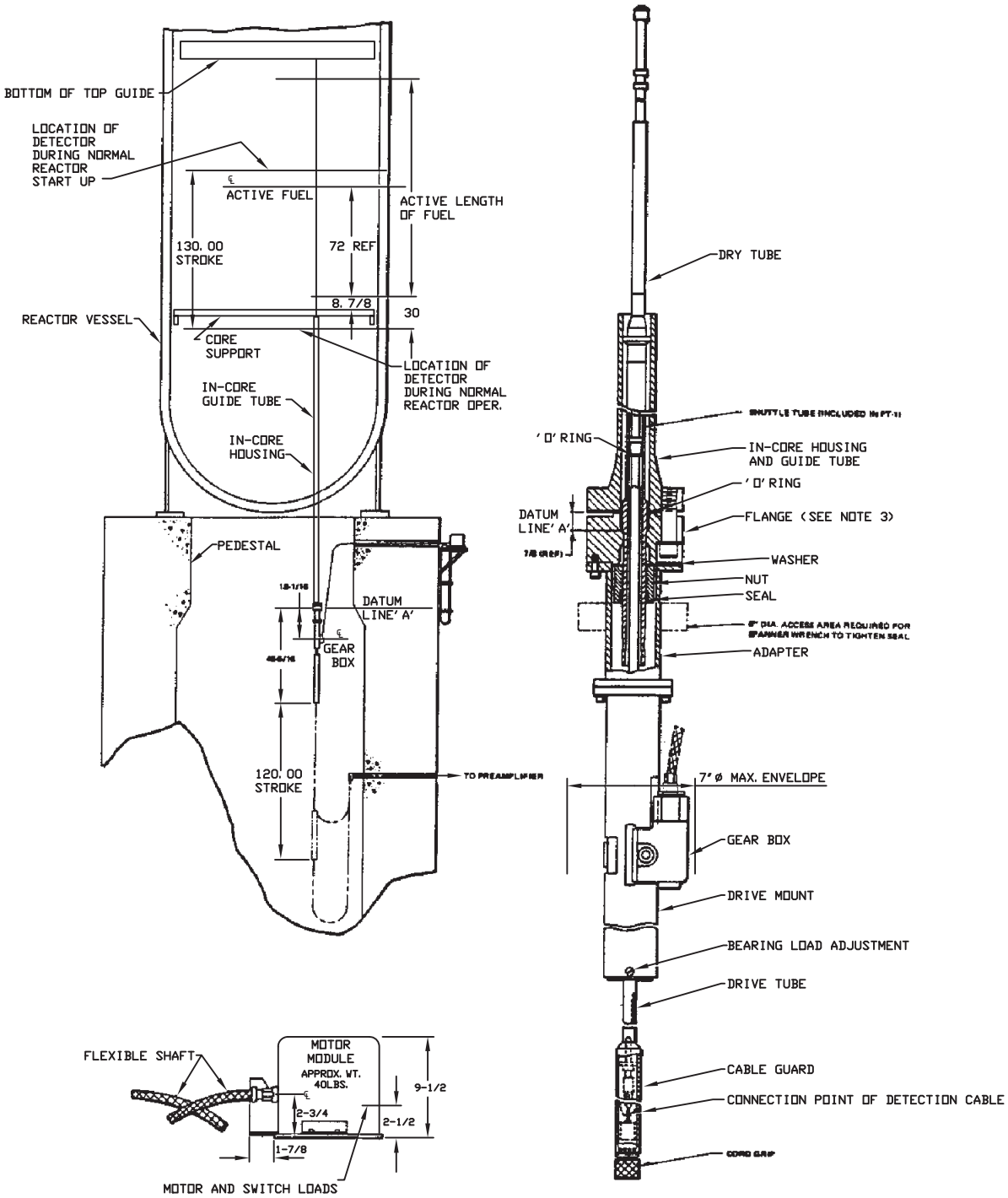

FSAR REV.65

SUSQUEHANNA STEAM ELECTRIC STATION
UNITS 1 & 2
FINAL SAFETY ANALYSIS REPORT

SRM/IRM NEUTRON
MONITORING UNIT

FIGURE 7.6-5, Rev 49

AutoCAD: Figure Fsar 7_6_5.dwg

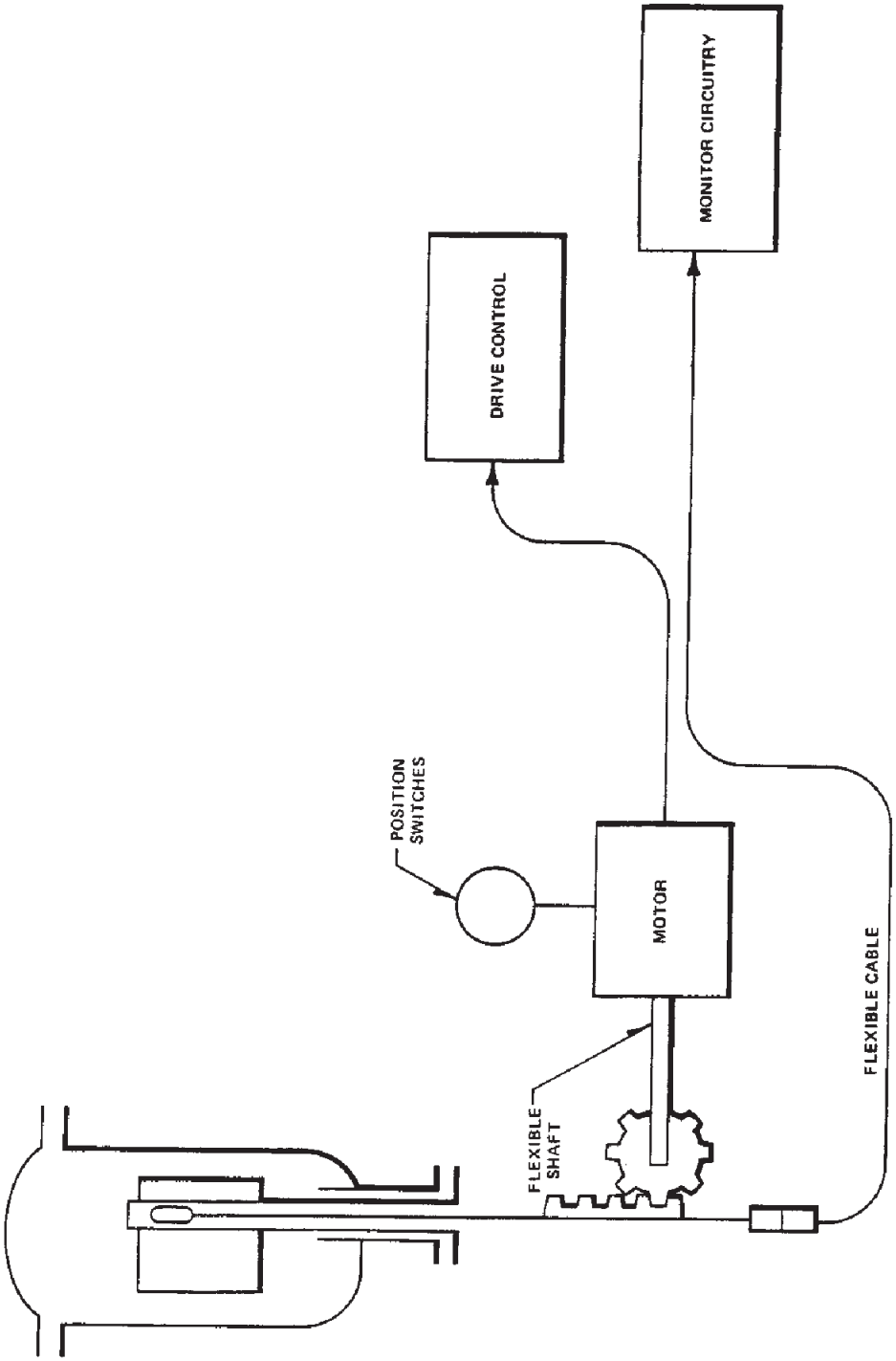

FSAR REV.65

SUSQUEHANNA STEAM ELECTRIC STATION
UNITS 1 & 2
FINAL SAFETY ANALYSIS REPORT

DETECTOR DRIVE SYSTEM
SCHEMATIC

FIGURE 7.6-6, Rev 49

AutoCAD: Figure Fsar 7_6_6.dwg

FIGURE 7.6-7-1 REPLACED BY DWG. M1-C51-2, SH. 1

FIGURE 7.6-7-2 REPLACED BY DWG. M1-C51-2, SH. 2

FIGURE 7.6-7-3 REPLACED BY DWG. M1-C51-2, SH. 3

FIGURE 7.6-7-4 REPLACED BY DWG. M1-C51-2, SH. 4

FIGURE 7.6-7-5 REPLACED BY DWG. M1-C51-2, SH. 5

FIGURE 7.6-7-6 REPLACED BY DWG. M1-C51-2, SH. 6

FIGURE 7.6-7-7 REPLACED BY DWG. M1-C51-2, SH. 7

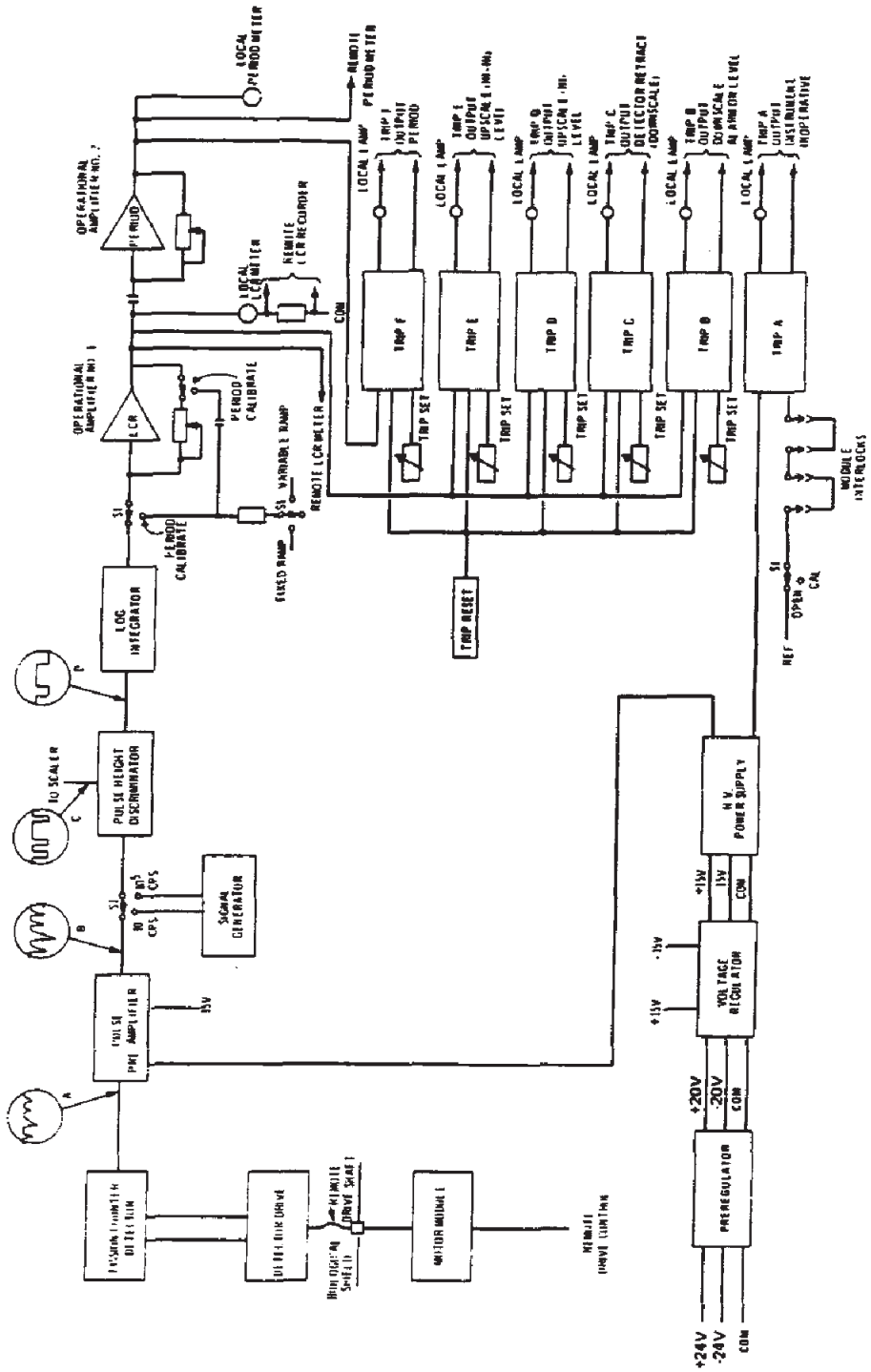

FSAR REV.65

SUSQUEHANNA STEAM ELECTRIC STATION UNITS 1 & 2 FINAL SAFETY ANALYSIS REPORT
FUNCTIONAL BLOCK DIAGRAM OF SRM CHANNEL FIGURE 7.6-8, Rev 49

AutoCAD: Figure Fsar 7_6_8.dwg

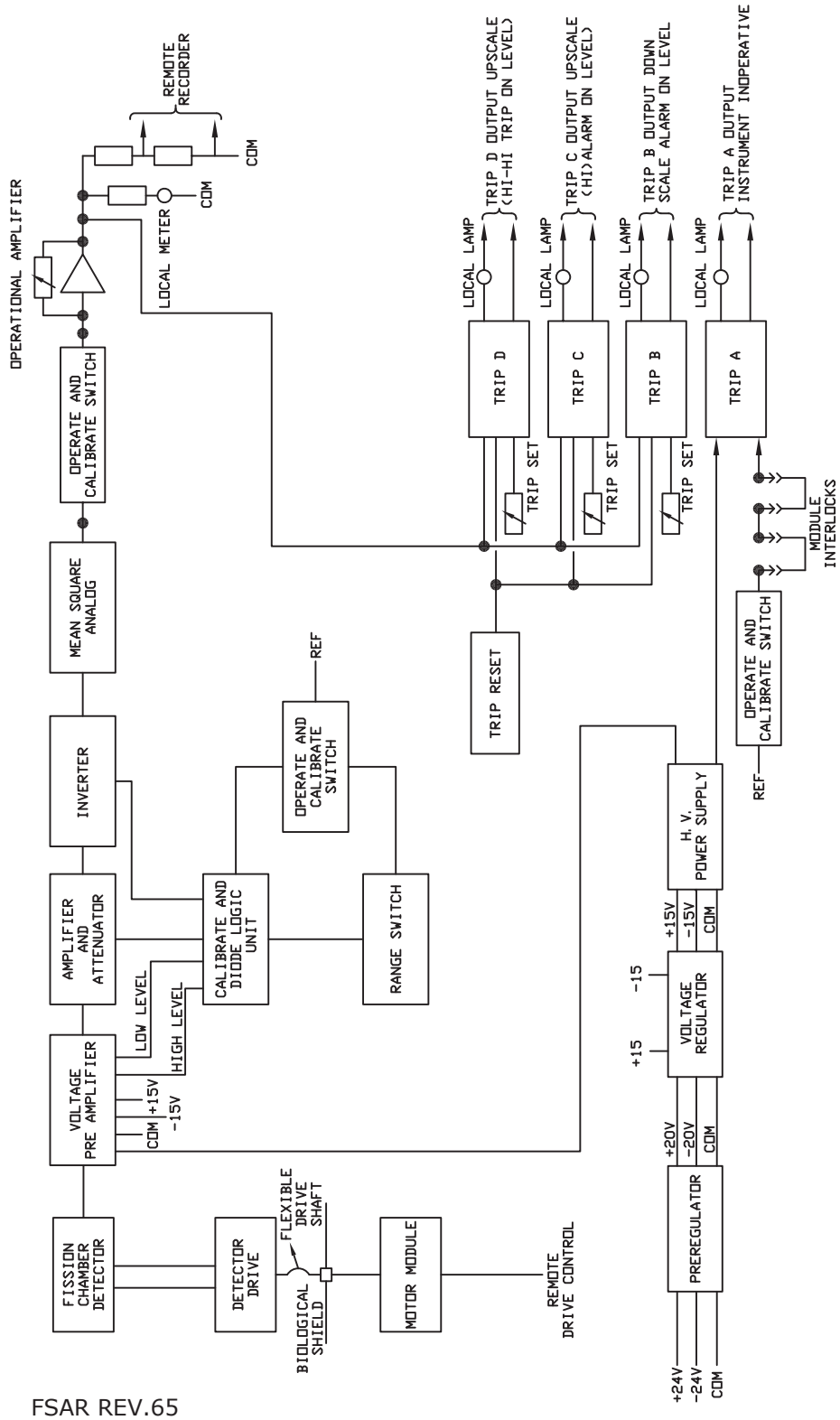

FSAR REV.65

SUSQUEHANNA STEAM ELECTRIC STATION
UNITS 1 & 2
FINAL SAFETY ANALYSIS REPORT

FUNCTIONAL BLOCK DIAGRAM
OF IRM CHANNEL

FIGURE 7.6-9, Rev 49

AutoCAD: Figure Fsar 7_6_9.dwg

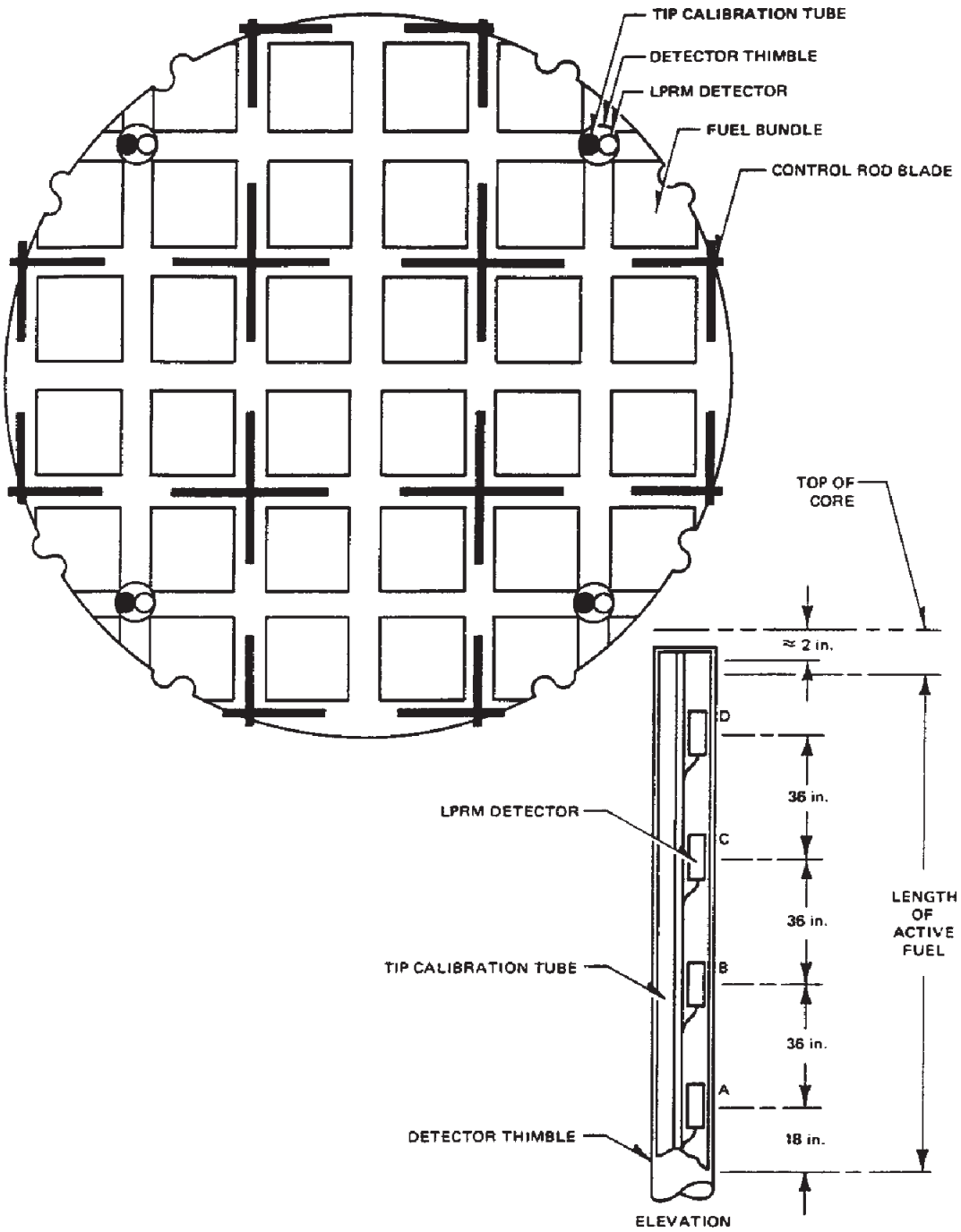

FSAR REV.65

SUSQUEHANNA STEAM ELECTRIC STATION
UNITS 1 & 2
FINAL SAFETY ANALYSIS REPORT

POWER RANGE MONITOR DETECTOR
ASSEMBLY LOCATION

FIGURE 7.6-10, Rev 49

AutoCAD: Figure Fsar 7_6_10.dwg

P&ID – REACTOR RECIRCULATION SYSTEM

FSAR REV. 65

SUSQUEHANNA STEAM ELECTRIC STATION UNITS 1 & 2 FINAL SAFETY ANALYSIS REPORT
P&ID – REACTOR RECIRCULATION SYSTEM FIGURE 7.6-11-1, Rev. 48

AutoCAD Figure 7_6_11_1.doc

FIGURE 7.6-11-2 REPLACED BY DWG. M1-B31-13, SH. 2

FIGURE 7.6-11-3 REPLACED BY DWG. M1-B31-13, SH. 3

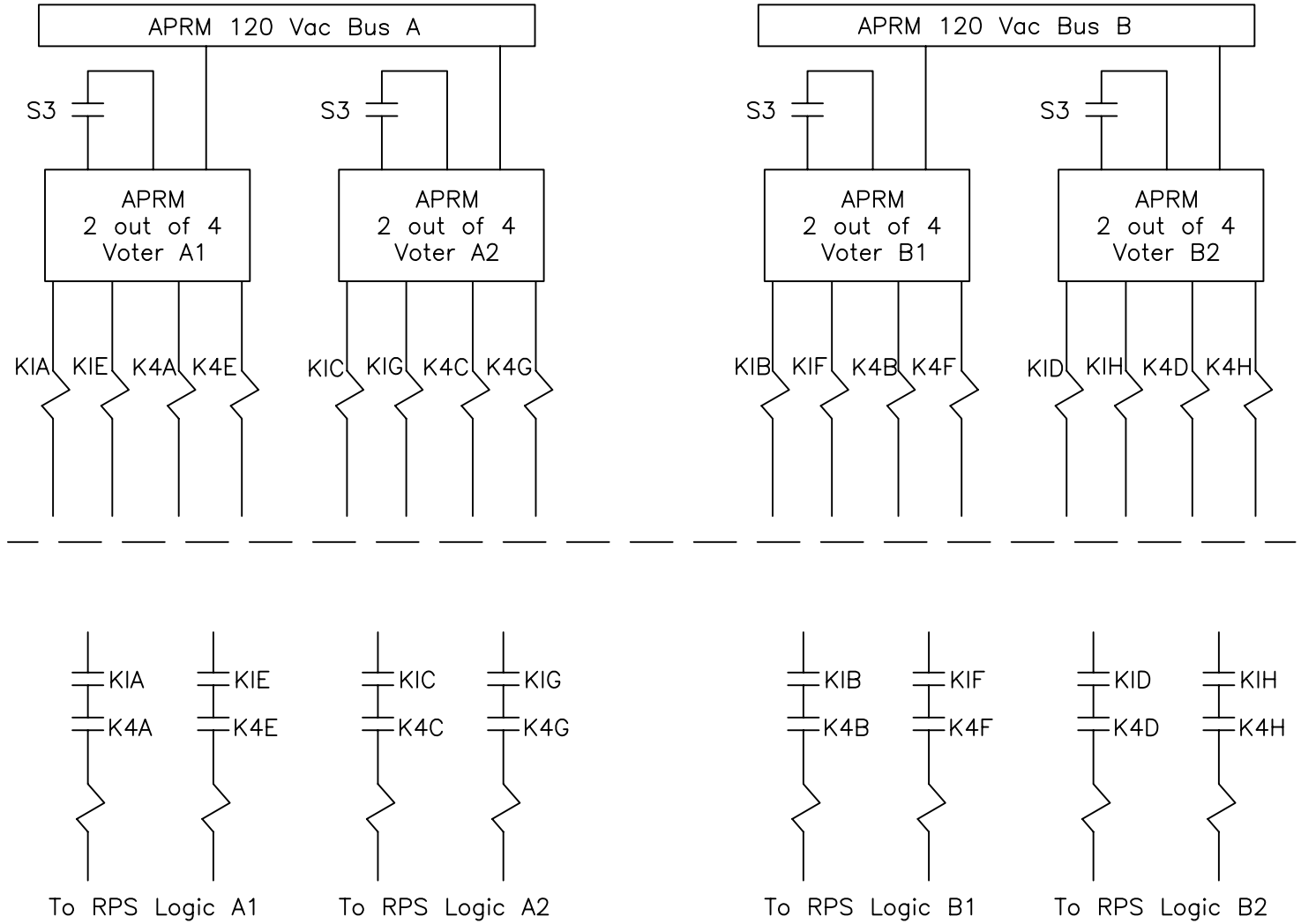

NOTE: Contacts are shown in normal operationposition.

LEGEND: K1A, K1B, K1C, K1D, K1E, K1F, K1G, K1H = (APRM Neutron Flux – High <u>or</u> APRM Simulated Thermal Power – High <u>or</u> APRM Inop) <u>and</u> (APRM Not Bypassed)
K4A, K4B, K4C, K4D, K4E, K4F, K4G, K4H = (OPRM Trip <u>or</u> APRM Inop) <u>and</u> (OPRM Not Bypassed)
S3 = APRM Bypass Switch

SUSQUEHANNA STEAM ELECTRIC STATION
UNITS 1 & 2
FINAL SAFETY ANALYSIS REPORT

ARM CIRCUIT ARRANGEMENT
FOR REACTOR PROTECTION
SYSTEM INPUT

FIGURE 7.6-12, Rev 56

FSAR REV.65

AutoCAD: Figure Fsar 7_6_12.dwg

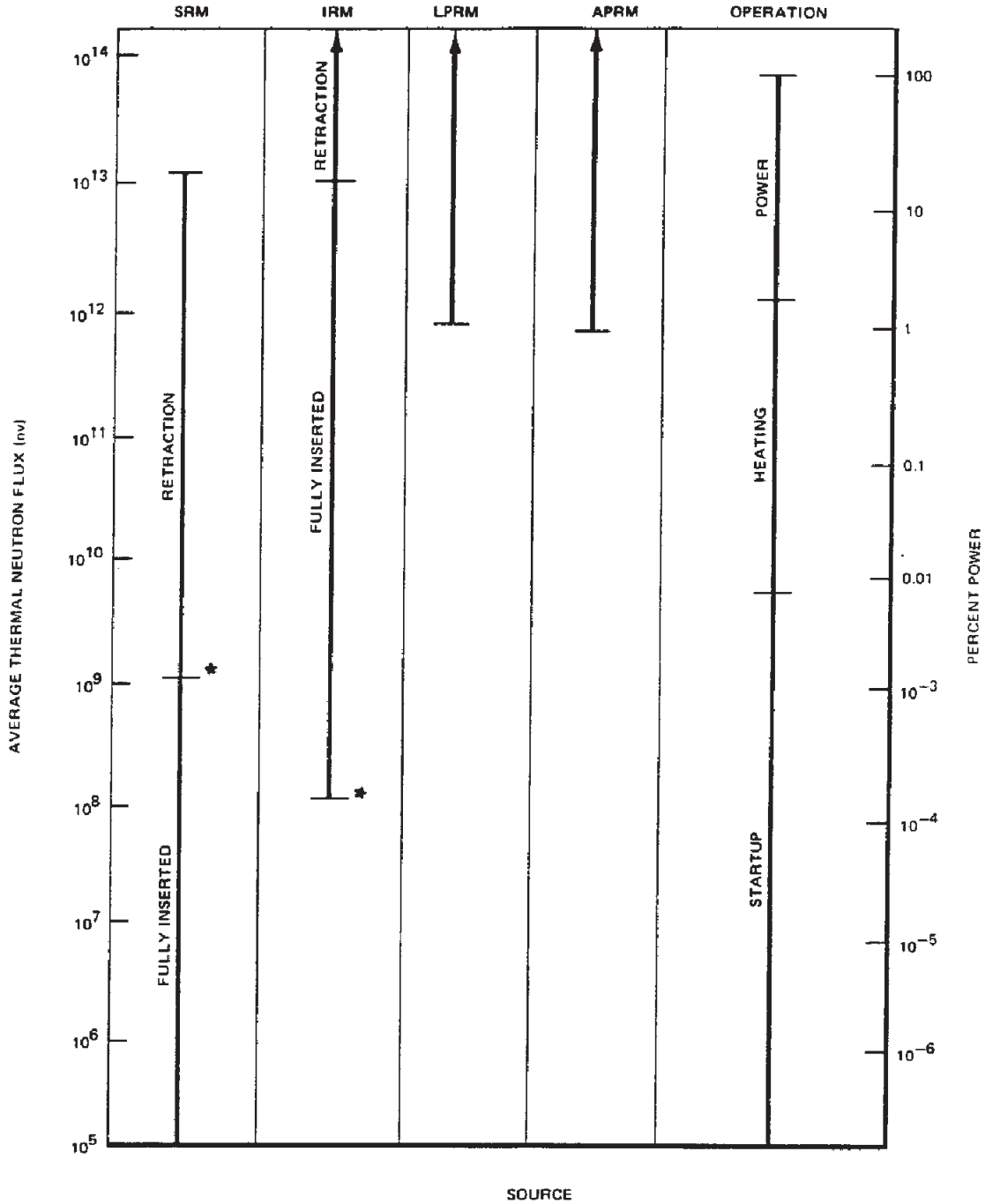

*SEE PARAGRAPH 7.7.2.13.1.1 FOR DISCUSSION OF SRM/IRM OVERLAP.

FSAR REV.65

SUSQUEHANNA STEAM ELECTRIC STATION
UNITS 1 & 2
FINAL SAFETY ANALYSIS REPORT

RANGES OF NEUTRON
MONITORING SYSTEM

FIGURE 7.6-13, Rev 49

AutoCAD: Figure Fsar 7_6_13.dwg

7.7 CONTROL SYSTEMS NOT REQUIRED FOR SAFETY

7.7.1 DESCRIPTION

This subsection discusses instrumentation controls of systems whose functions are not essential for the safety of the plant and permits an understanding of the way the reactor and important subsystems are controlled. The systems include:

(1) Reactor vessel - instrumentation NSSS
(2) Reactor manual control system - instrumentation and controls, NSSS
(3) Recirculation flow control system - instrumentation and controls NSSS
(4) Reactor feedwater system - instrumentation and controls NSSS
(5) Pressure regulator and turbine - generator system - instrumentation and controls non-NSSS
(6) Neutron monitoring system - TIP
(7a) Process computer system - instrumentation NSSS
(7b) Remote Data Analysis System - instrumentation NSSS
(8) Reactor water cleanup system - instrumentation and controls NSSS
(9) Transient Monitoring System
(10) Refueling interlocks system
(11) Neutron Monitoring System - rod block monitor system
(12) Nuclear Pressure Relief System - instrumentation and controls
(13) Neutron Monitoring System - source range monitor subsystem
(14) Loose parts monitoring system

7.7.1.1 Reactor Vessel - Instrumentation

Dwg. M-141, Sh. 1, Dwg. M-141, Sh. 2 and Dwg. M-142, Sh. 1 show the instrument numbers, arrangements of the sensors, and sensing equipment used to monitor the reactor vessel conditions. Because the reactor vessel sensors used for safety systems, engineered safeguards, and control systems are described and evaluated in other portions of this document, only the sensors that are not required for those systems are described in this subsection.

7.7.1.1.1 System Identification

7.7.1.1.1.1 General

The purpose of the reactor vessel instrumentation is to monitor the key reactor vessel operating variables during plant operation.

These instruments and systems are used to provide the operator with information during normal plant operation, startup and shutdown. They are monitoring devices and provide no active power control or safety functions.

7.7.1.1.1.2 Classification

The systems and instruments discussed in this subsection are designed to operate under normal and peak operating conditions of system pressures and ambient pressures and temperatures and are classified as not related to safety.

START HISTORICAL

7.7.1.1.1.3 Reference Design

Table 7.1-2 lists the reference design information. The reactor vessel instrumentation is an operational system and has no safety function. Therefore, there are no safety design differences between this system and those of the reference design facilities. This system is functionally identical to the referenced system.

END HISTORICAL

7.7.1.1.2 Power Sources

The systems and instruments discussed in this subsection are powered from the instrument bus.

7.7.1.1.3 Equipment Design

The instrument sensing lines that the various pressure and level sensors are connected to slope downward from the vessel to the instrument rack (including allowance for piping sag), so that air traps are not formed. The instrument lines are self-venting back to either the reactor vessel or the condensation chamber.

7.7.1.1.3.1 Circuit Description

7.7.1.1.3.1.1 Reactor Vessel Temperature

The temperature of the coolant in the reactor pressure vessel during normal operation can be determined from either the reactor pressure or the temperature of the water in the inlet side of the recirculation loop. When the recirculation loop flow is low, vessel coolant temperature at saturation conditions can be determined from coolant pressure.

7.7.1.1.3.1.2 Reactor Vessel Water Level

Figure 7.7-1 shows the water level range and the vessel penetration for each water level range. The instruments that sense the water level are strictly differential pressure devices calibrated to be accurate at a specific vessel pressure and liquid temperature condition. The following is a description of each water level range shown on Figure 7.7-1.

(1) Shutdown water level range: This range is used to monitor the reactor water level and the water level in the reactor cavity during refueling activities. The water level measurement design for periods when the vessel head is on uses, the condensate reference chamber leg type that is not compensated for changes in density. The vessel temperature and pressure condition that is used for this calibration when the vessel head is on uses 0 psig and 120°F water in the vessel. When the vessel head is off and the condensate pot leg is disconnected the instrument reference leg is vented to the atmosphere at the loop transmitter. This allows for the measuring of the reactor vessel and the reactor cavity water level, referenced to instrument zero, to the top lip of the cavity. The two reactor vessel instrument penetration elevations used for the water level measurement when the vessel head is on are located at the top of the RPV head and the instrument tap just below the

bottom of the dryer skirt. The zero of the instrument is at the bottom of the steam dryer skirt.

(2) Upset water level range: This range is used to monitor the reactor water when the level of the water goes off the narrow range scale on the high side. The design and vessel taps are the same as outlined above. The vessel pressure and temperature condition for accurate indication is at the normal operating point. The upset water level is continuously indicated by a recorder in the control room. The upset range and narrow range recorders are located in close proximity of each other. The upset range upper limit is higher than the narrow range upper limit. Therefore when the indication goes off scale in the upscale direction on the narrow range recorder, water level indication may be read immediately from the upset range recorder. Further information as to the range and main control room indication is discussed in Subsection 7.7.1.4. The zero of the instrument is the bottom of the dryer skirt.

(3) Narrow water level range: This range uses RPV taps at the elevation near the top of the dryer skirt and taps at an elevation near the bottom of the dryer skirt. The zero of the instrument is the bottom of the dryer skirt and the instruments are calibrated to be accurate at the normal operating point. The water level measurement design is the condensate reference chamber type, is not density compensated, and uses differential pressure devices as its primary elements. The feedwater control system uses this range for its water level control and indication inputs. For more information as to the range, trip points, number of channels, and control room indication, see the discussion on the feedwater control system, Subsection 7.7.1.4.

(4) Wide water level range: This range uses RPV taps at the elevation near the top of the dryer skirt and the taps at an elevation near the top of the active fuel. The zero of the instrument is the bottom of the dryer skirt and the instruments are calibrated to be accurate at the normal power operating point. The water level measurement design is the condensate reference type, is not density compensated, and uses differential pressure devices as its primary elements. Wide range water level is displayed on two redundant recorders located in the main control room.

(5) Fuel zone water level range: This range uses RPV taps at the elevation near the top of the dryer skirt and the taps at the jet pump diffuser skirt. The zero of the instrument is the bottom of the dryer skirt and the instruments are calibrated to be accurate at 0 psig and saturated condition. The water level design is the condensate reference type, is not density compensated, and uses differential pressure devices as its primary element. These instruments provide input for water level indication.

The condensate reference chamber for the Narrow range, Wide Range, and Fuel Zone water level range is common as discussed in Section 7.3.

In order to decouple the change in measured water level with changes in drywell temperature, the volume from RPV penetration to the drywell penetration will remain uniform for the narrow range and wide range water level instrument lines.

Reactor water level instrumentation that initiates safety systems and engineered safeguards systems is discussed in Sections 7.2 and 7.3. Reactor water level instrumentation that is used as part of the feedwater control system is discussed in Subsection 7.7.1.4.

The Reactor Pressure Vessel level instrumentation system condensing chamber vent lines are discussed in Section 7.5.1a.4.2.1.

7.7.1.1.3.1.3 Reactor Core Hydraulics

A differential pressure transmitter indicates core plate pressure drop by measuring the pressure difference between the core inlet plenum and the space just above the core support assembly. The instrument sensing line used to determine the pressure below the core support assembly attaches to the same reactor vessel tap that is used for the injection of the liquid from the standby liquid control system. An instrument sensing line is provided for measuring pressure above the core support assembly. The differential pressure of the core plate is recorded in the main control room.

Another differential pressure device indicates the jet pump developed head by measuring the pressure difference between the pressure above the core and the pressure below the core plate. This indication is indicated in the main control room.

7.7.1.1.3.1.4 Reactor Vessel Pressure

Pressure switches/transducers, indicators, and transmitters detect reactor vessel internal pressure from the same instrument lines used for measuring reactor vessel water level.

The following list shows the subsection in which the reactor vessel pressure measuring instruments are discussed:

(1) Pressure switches/transducers for initiating scram, and pressure switches/ transducers for bypassing the main steamline isolation valve closure are discussed in Subsection 7.2.1.1.

(2) Pressure switches/transducers used for HPCI, CS, LPCI, and ADS are discussed in Subsection 7.3.1.1a.1.

(3) Pressure transmitters/transducers and recorders used for feedwater control are discussed in Subsection 7.7.1.4.

(4) Pressure transmitters/transducers that are used for pressure recording are discussed in Subsection 7.5.1a.4.2.2.

7.7.1.1.3.1.5 Reactor Vessel Head Seal Leak Detection

Pressure between the inner and outer reactor vessel head seal ring will be detected by a pressure indicator. If the inner seal fails, the pressure at the pressure indicator is the vessel pressure and can be read on the panel outside of primary containment. The plant will continue to operate with the outer seal as a backup, and the inner seal can be repaired at the next outage when the head is removed. If both the inner and outer head seals fail, the leak will be detected by an increase in drywell temperature and pressure.

7.7.1.1.3.1.6 Safety/Relief Valve Seal Leak Detection

Thermocouples are located near the discharge of the safety/relief valve seat. The temperature signal goes to a multipoint recorder with an alarm. The alarm will be activated by any temperature in excess of a set temperature signaling that one of the safety/relief valve seats has started to leak.

Each of the sixteen safety relief valves are provided with a safety grade acoustical monitoring system to detect flow through the valve, reference Subsection 18.1.24.3.

7.7.1.1.3.1.7 Other Instruments

(1) The steam temperature is measured and is transmitted to a backrow panel in the main control room.

(2) The feedwater temperature is measured and transmitted to a backrow panel in the main control room.

(3) The feedwater corrosion products are monitored and the information is available at the Water Chemistry Data Acquisition System.

7.7.1.1.3.2 Testability

Pressure, differential pressure, water level, and flow instruments are located outside the drywell and are piped so that calibration and test signals can be applied during reactor operation, if desired.

7.7.1.1.4 Environmental Considerations

There are no special environmental considerations for the instruments described in this subsection.

7.7.1.1.5 Operational Considerations

7.7.1.1.5.1 General Information

The reactor vessel instrumentation discussed in this subsection is designed to augment the existing information from the engineered safeguards and safety system such that the operator can start up, operate at power, shut down, and service the reactor vessel in an efficient manner. None of this instrumentation is required to initiate any engineered safeguard or safety system.

7.7.1.1.5.2 Reactor Operator Information

The information that the operator has at his disposal from the instrumentation discussed in this subsection is discussed below:

(1) The shutdown flooding water level is indicated in the main control room.

(2) The core plate differential pressure is recorded on one pen of a two pen recorder. The second pen is used for total core flow.

(3) The jet pump developed head is indicated at a local instrument panel.

(4) Reactor vessel pressure is displayed on two redundant recorders located in the main control room.

(5) The reactor head inter-seal space pressure detector detects reactor pressure when the inner reactor head seal fails.

(6) The discharge temperatures of all the safety/relief valves are shown on a multipoint recorder on a backrow panel in the control room. Any temperature point that has exceeded the trip setting will turn on an annunciator indicating that a safety/relief valve seat has started to leak. (Also see Subsection 18.1.24.3 for a discussion of the acoustical monitoring system.)

(7) The feedwater corrosion products are monitored and the information is available at the Water Chemistry Data Acquisition System.

7.7.1.1.5.3 Setpoints

The annunciator alarm setpoint for the safety/relief valve seat leak detection is set so the sensitivity to the variable being measured will provide adequate information.

Figure 7.7-1 includes a chart showing the relative indicated water levels at which various automatic alarms and safety actions are initiated. Specific level values are shown in Tables 7.3-1, 7.3-2, 7.3-3, 7.3-4 and 7.3-5. Each of the listed actions is described and evaluated in the subsection of this report where the system involved is described. The following list tells where various level measuring components and their setpoints are discussed.

(1) Level switches/transducers for initiating scram are discussed in Subsection 7.2.1.

(2) Level switches/transducers for initiating containment or vessel isolation are discussed in Subsection 7.3.1.1a.2.

(3) Level switches used for initiating HPCI, LPCI, CS and ADS and the level switches used to shut down the HPCI pump are discussed in Subsection 7.3.1.1a.

(4) Level switches to initiate RCIC and the level switches to shut down the RCIC pump drive turbine are discussed in Subsection 7.4.1.1.

(5) Level trips to initiate various alarms and trip the main turbine and the feed pumps are discussed in Subsection 7.7.1.4.

7.7.1.2 Reactor Manual Control System - Instrumentation and Controls

7.7.1.2.1 System Identification

7.7.1.2.1.1 General

The objective of the reactor manual control system is to provide the operator with the means to make changes in nuclear reactivity so that reactor power level and power distribution can be controlled. The system allows the operator to manipulate control rods.

The reactor manual control system instrumentation and controls consists of the electrical circuitry, switches, indicators, and alarm devices provided for operational manipulation of the control rods and the surveillance of associated equipment.

This system includes the interlocks that inhibit rod movement (rod block) under certain conditions. The reactor manual control system does not include any of the circuitry or devices used to automatically or manually scram the reactor; these devices are discussed in Section 7.2. In addition, the mechanical devices of the control rod drives and the control rod drive hydraulic system are not included in the reactor manual control system. The latter mechanical components are described in Subsection 4.1.3.

7.7.1.2.1.2 Classification

This system is a power generation system, and is classified as not related to safety.

START HISTORICAL

7.7.1.2.1.3 Reference Design

Table 7.1-2 lists reference design information. The reactor manual control system is an operational system and has no safety function. Therefore, there are no safety design differences between this system and those of the reference design facilities. This system is functionally identical to the referenced system.

END HISTORICAL

7.7.1.2.2 Power Sources

Normal

The reactor manual control system receives its power from the 120 VAC instrumentation buses. Each of these buses receives its normal power supply from the appropriate 460 VAC standby power system. (See Subsection 8.3.1.)

Alternate

On loss of normal auxiliary power, the station diesel generators provide backup power to the 480 volt standby AC power systems.

7.7.1.2.3 Equipment Design

7.7.1.2.3.1 General

The following discussions will examine the control rod movement - instrumentation and control aspects of the subject system and the control rod position information system aspects. The "control" descriptions include:

(1) Control Rod Drive - Control System
(2) Control Rod Drive - Hydraulic System
(3) Rod Block Interlocks

The "position" descriptions include:

(1) Rod Position Probes
(2) Display Electronics

Dwgs. M-146, Sh. 1 and M-147, Sh. 1 show the layout of the control rod drive hydraulic system. Figure 7.7-2 shows the functional arrangement of devices for the control of components in the control rod drive hydraulic system. The block diagram for the overall reactor manual control system is shown in Dwgs. M1-C12-90, Sh. 4 and M1-C12-110, Sh. 8. Although Figures 7.7-2-1 to 7.7-2-7 also shows the functional arrangement of scram devices, these devices are not part of the reactor manual control system. Control rods are moved by admitting water, under pressure from a control rod drive water pump, into the appropriate end of the control rod drive cylinder. The pressurized water forces the piston, which is attached by a connecting rod, to move. Three modes of control rod operation are used: insert, withdraw, and settle. Four solenoid-operated valves are associated with each control rod to accomplish the actions required for the operational modes. The valves control the path that the control rod drive water takes to the cylinder.

7.7.1.2.3.2 Rod Movement Controls

7.7.1.2.3.2.1 Control Rod Drive Control System

7.7.1.2.3.2.1.1 Introduction

When the operator selects a control rod for motion and operates the rod insertion control switch messages are formulated in the A and B portions of the rod drive control system (see Figure 7.7-4). A comparison test is made of these two messages, and identical results confirmed; then a serial message in the form of electrical pulses is transmitted to all hydraulic control units (HCU). The message contains two portions, (1) the identity or "address" of the selected HCU, and (2) operation data on the action to be executed. Only the addressed HCU responds to this transmission; it proceeds to execute the rod motion commands.

On receipt of the transmitted signal as shown in Figure 7.7-4, the responding HCU transmits a message back to the control structure for comparison with the original message. This returning message contains:

(1) its own hard-wire identity "address,"

(2) its own operations currently being executed, and

(3) status indications of valve positions, accumulator conditions, and test switch positions.

In a similar manner, rod withdrawal is accomplished by formulating a message containing a different operation code. The responding HCU decodes the message and proceeds to execute the withdrawal command by operation of HCU valves shown in Dwgs. M-146, Sh. 1 and M-147, Sh. 1.

In either rod motion direction, the A and B messages are formulated and compared bit by bit (basic word length = 100 microseconds). If they agree, a message is transmitted to the HCU selected by the operator. Continued rod motion depends on receipt of a train of sequential messages because the HCU insert, withdraw, and settle valve control circuits are accoupled. The system must operate in a dynamic manner to effect rod motion. Postulated failures within the reactor manual

control system generally will result in a static condition within the system, which will prevent further rod motion.

As discussed above, any disagreement between the A and B formulated messages will prevent further rod motion. Electrical noise disruptions will have only a momentary effect on the system unless the duration of the noise source is sufficiently long to disrupt the comparison of the stored "B" message and the "C" acknowledgement a predetermined number of times. In guaranteeing that rod motion is indeed terminated, operator action is necessary to reset the system to restore normal operation. In Figure 7.7-5, three action loops of the solid-state reactor manual control system are depicted:

Loop A The high-speed loop (duration = 200 sec.) alternately:

a) Commands the selected control rod, and

b) Either scans a rod for status information or directs a portion of a single HCU self-test.

Loop B The medium speed loop = (143 msec. duration) alternately:

a) Monitors the status of all rods, and

b) Completes two seven-step self-checks on one HCU unit.

Loop C The low speed loop (=40 sec. to 240 sec. duration) self-tests all HCU's one at a time to ensure correct execution of actions commanded. These tests are of such short duration that the valves do not move.

The rod selection circuitry is arranged so that a rod selection is sustained until either another rod is selected or separate action is taken to revert the selection circuitry to a non-rod-selection condition. Initiating movement of the selected rod prevents the selection of any other rod until the movement cycle of the selected rod has been completed. Reversion to the no-rod-selected condition is not possible (except for loss of control circuit power) until any moving rod has completed the movement cycle.

Two of the valves on the HCU, labeled "withdraw," permit rod withdrawal. The withdrawal valve that connects the insert drive water supply line to the exhaust water header is the one that is associated with the settle operation. The remaining withdraw valve is associated only with the withdraw operation. The settle mode of control rod operation is provided to decelerate the control rod at the end of either an insert cycle or a withdraw cycle. The settle action smoothes out the control rod movement and prolongs the life of control rod drive hydraulic system components. During the settle mode, the withdraw valve associated with the settle operation is opened or remains open while the other three solenoid-operated valves are closed.

During an insert cycle, the settle action vents the pressure from the insert drive water supply line to the exhaust header and thus gradually reduces the differential pressure across the drive piston of the selected rod. During a withdraw cycle, the settle action holds open the discharge path for withdraw water while the withdraw drive water supply is shut off. This also allows a gradual reduction in the differential pressure across the control rod drive piston. After the control rod has slowed down, the collet fingers engage the index tube and lock the rod in position.

The direction in which the selected rod moves is determined by the position of four switches located on the reactor control panel. These four switches, "insert," "withdraw," "continuous insert" and "continuous withdraw," are pushbuttons which return by spring action to an off position.

7.7.1.2.3.2.1.2 Insert Cycle

Following is a description of the detailed operation of the reactor manual control system during an insert cycle. The cycle is described in terms of the insert, withdraw, and settle commands emanating from the reactor manual control system. The response of a selected rod when the various commands are transmitted has been explained previously. Figure 7.7-2 can be used to follow the sequence of an insert cycle.

With a control rod selected for movement, depressing the "insert" switch and then releasing the switch energizes the insert command for a limited time. Just as the insert command is removed, the settle command is automatically energized and remains energized for a limited time. The insert command time setting and the rate of drive water flow provided by the control rod drive hydraulic system determine the distance traveled by a rod. The time setting results in a one-notch (6-inch) insertion of the selected rod for each momentary application of a rod-in signal from the rod movement switch. Continuous insertion of a selected control rod is possible by holding the "insert" switch.

A second switch can be used to affect insertion of a selected control rod. This switch is the "continuous insert" switch. By holding this switch "in," the unit maintains the insert command in a continuous, energized state to cause continuous insertion of the selected control rod. When released, the timers are not longer bypassed and normal insert and settle cycles are initiated to stop the drive.

7.7.1.2.3.2.1.3 Withdraw Cycle

Following is a description of the detailed operation of the reactor manual control system during a withdraw cycle. The cycle is described in terms of the insert, withdraw, and settle commands. The response to a selected rod when the various commands are transmitted has been explained previously. Figure 7.7-2 can be used to follow the sequence of a withdraw cycle.

With a control rod selected for movement, depressing the "withdrawal" switch energizes the insert valves for a short time. Energizing the insert valves at the beginning of the withdrawal cycle is necessary to allow the collet fingers to disengage the index tube. When the inert valves are deenergized, the withdraw and settle valves are energized for a controlled period of time. The withdraw valve is deenergized before the settle valve; this tends to decelerate the selected rod. When the settle valve is deenergized, the withdraw cycle is complete. This withdraw cycle is the same whether the withdraw switch is held continuously or momentarily depressed position. The timers that control the withdraw cycle are set so that the rod travels one notch (6-inch) per cycle. Provisions are included to prevent further control rod motion in the event of timer failure.

A selected control rod can be continuously withdrawn if the "withdraw" switch is held in the depressed position at the same time that the "continuous withdraw" switch is held in the depressed position. With both switches held in these positions, the withdraw and settle commands are continuously energized.

7.7.1.2.3.2.2 Control Rod Drive-Hydraulic System Control

One motor-operated pressure control valve, two air-operated flow control valves, and two sets of solenoid-operated stabilizer valves are included in the control rod drive hydraulic system to maintain smooth and regulated system operation. These devices are shown in Dwgs. M-146, Sh. 1 and M-147, Sh. 1. The motor-operated pressure control valve is positioned by manipulating a switch in the main control room. The switch for this valve is located close to the pressure indicators that respond to the pressure changes caused by the movements of the valves. The air-operated flow control valves are automatically positioned in response to signals from an upstream flow measuring device. The stabilizer valves are automatically controlled by the energization of the insert and withdraw commands. The control scheme is shown in Figure 7.7-2. There are two drive water pumps which are controlled by switches in the main control room. Each pump automatically stops on indication on low-suction pressure.

7.7.1.2.3.2.3 Rod Block Interlocks

The rod block functions are discussed in Subsection 7.7.1.2.6.

7.7.1.2.3.2.4 Testability

In addition to the periodic self-test mode of system operation, the reactor manual control circuitry can be routinely checked for correct operation by manipulating control rods using the various methods of control. Detailed testing and calibration can be performed by using standard test and calibration procedures for the various components of the reactor manual control circuitry.

7.7.1.2.3.3 Rod Position Information

This subsystem includes the rod position probes and the electronic hardware that processes the probe signals and provides the data described above.

7.7.1.2.3.3.1 Position Probes

The position probe is a long, cylindrical assembly that fits inside the control rod drive index tube. It includes 53 magnetically operated reed switches, located along the length of the probe and operated by a permanent magnet fixed to the moving part of the hydraulic drive mechanism. As the drive, and with it the control rod blade, moves along its length, the magnet causes reed switches to close as it passes over the switch locations. The particular switch closed then indicates where the control rod drive, and hence the rod itself, is positioned.

The switches are located as follows: one at each of 25 notch (even) position; one at each of 24 mid-notch (odd) positions; 2 at the fully inserted position (approximately the same location as the "00" notch); one at the fully withdrawn position (approximately the same location as the "48" notch position); and one at the "overtravel" or decoupled position.

All of the mid-notch or "odd" switches are wired in parallel and treated as one switch (for purposes of external connections), and the two fully-in switches are wired in parallel and treated as one switch. These and the remaining switches are wired in a 5 x 6 array (the switches short the intersections) and routed out in 11-wire cable to the processing electronics (the probe also includes a thermocouple which is wired out separately from the 5 x 6 array). See Figure 7.7-6.

7.7.1.2.3.3.2 Position Indication Electronics

The electronics consists of a set of "probe multiplexer cards" (one per 4-rod group where the 4-rod group is the same as the display grouping described above), a set of "file control cards" (one per 11 multiplexer cards), and one set of master control and processing cards serving the whole system. All probe multiplexer cards are the same except that each has a pair of plug-in "daughter cards" containing the identity code of one 4-rod group (the probes for the corresponding 4 rods are connected to the probe multiplexer card).

7.7.1.2.3.3.3 System Operation

The system operates on a continuous scanning basis with a complete cycle every 40 msec. The operation is as follows: The control logic generates the identity code of one rod in the set, and transmits it using time multiplexing to all of the file control cards. These in turn transmit the identity with timing signals to all of the probe multiplexer cards. The one multiplexer card with the matching rod identity will respond and transmit its identity (locally generated) plus the "raw" probe data for that rod back through the file control card to the master control and processing logic. The processing logic does several checks on the returning data. First, a check is made to verify that an answer was received. Next, the identity of the answering data is checked against that which was sent. Finally, the format of the data is checked for "legitimacy." Only a single even position, or full-in plus position "00," or full-out plus position "48," or odd, or overtravel, or blank (no switch closed) are legitimate. Any other combination of switches is flagged as a fault.

If the data passes all of these tests, it is (a) decoded and transmitted in multiplexed form to the displays on the Unit Operating Benchboard, and (b) loaded into a memory to be read by the computer as required.

As soon as one rod's data is processed, the next rod's identity is generated and processed and so on for all of the rods. When data for all rods has been gathered, the cycle repeats.

7.7.1.2.4 Environmental Considerations

The reactor manual control system (control and position indication circuitry) is not required for any plant safety function, nor is it required to operate in any associated design basis accident or transient occurrence. The reactor manual control circuitry is required to operate only in the normal plant environment during normal power generation operations.

The control rod drives are located in the containment. The hydraulic control units for the control rod drives are located outside containment in the reactor building.

The logic and readout instrumentation are located in the control structure.

The control rod position detectors are located beneath the reactor vessel in the drywell. The normal design environments encountered in these areas are described in Section 3.11.

7.7.1.2.5 Operational Considerations

7.7.1.2.5.1 General Information

The reactor manual control system is totally operable from the main control room. Manual operation of individual control rods is possible to effect control rod insertion, withdrawal, or settle. Rod position indicators, described below, provide the necessary information to ascertain the operating state and position of all control rods. Conditions which prohibit control rod withdrawal are alarmed with the rod block annunciator.

7.7.1.2.5.2 Reactor Operator Information

Table 7.7-1 gives information on instruments for the reactor manual control system. A large rod information display on the Unit Operating Benchboard is patterned after a top view of the reactor. The display allows the operator to acquire information rapidly by scanning.

Colored windows provide an overall indication of rod pattern and allow the operator to quickly identify an abnormal indication. The following information for each control rod is presented in the display:

Rod fully inserted (green)
Rod fully withdrawn (red)
Selected rod identification (coordinate position, white)
Accumulator trouble (flashing red)
Rod drift (red)

The Unit Operating Benchboard contains a display on which the operator can display the positions of the control rods selected for movement and the other rods in the rod group. A separate, hardwired display is located on the standby information panel. In either display the control rods are considered in groups of four adjacent rods (a "four-rod group") centered around a common core volume monitored by four LPRM string. Rod groups at the periphery of the core may have less than four rods. The four-rod display shows the positions, in digital form, of the rods in the group to which the selected rod belongs. A backlighting on the digital display indicates which of the four rods is selected for movement. For Unit 2 only, on either side of the four-rod position display are indicated the readings of the 16 LPRM channels (four LPRM string) surrounding the core volume common to the four rods of the group.

The four-rod display allows the operator to better focus his attention to the portion of the core where rod motion is occurring. A full core rod position display would tend to be confusing and difficult to read. In addition, on demand by the operator, the process computer will provide a print-out of all rod positions.

In addition to the full core display, a drifting rod is indicated by an alarm and red light in the control room. The rod drift condition is also monitored by the process computer.

An indication is also provided for rod trend beyond the limits of normal rod movement. If the rod drive piston moves to the "overtravel" position, an alarm is sounded in the control room. The overtravel alarm provides a means to verify that the drive-to-rod coupling is intact because, with the coupling in its normal condition, the drive cannot be physically withdrawn to the overtravel position. Coupling integrity can be checked by attempting to withdraw the drive to the overtravel position.

Accumulator trouble and 4 rod display inop indicators are provided to the displays by the rod drive control system. The remaining information to the displays and the position information for the process computer are provided by the rod position subsystem.

The following main control room lights are provided to allow the operator to know the conditions of the control rod drive hydraulic system and the control circuitry:

Stabilizer valve selector switch position
Insert command energized
Withdraw command energized
Settle command energized
Withdrawal not permissive
Continuous withdrawal
Pressure control valve position
Flow control valve position
Drive water pump low suction pressure (alarm and pump trip)
Drive water filter high differential pressure (alarm only)
Unit 1: Charging water (to accumulator) high pressure (alarm only)
Unit 2: Charging water (to accumulator) low pressure (alarm only)
Control rod drive temperature (alarm only)
Scram discharge volume not drained (alarm only)
Scram valve pilot air header low pressure (alarm only)
Scram valve pilot air header high pressure (alarm only)

7.7.1.2.5.3 Setpoints

The subject system has no safety setpoints.

7.7.1.2.6 Rod Block Sub-Trip System of RMCS

A portion of the reactor manual control system, upon receipt of input signals from other systems and subsystems, inhibits movement or selection of control rods.

7.7.1.2.6.1 Grouping of Channels

The same grouping of neutron monitoring equipment (SRM, IRM, APRM, and RBM) that is used in the reactor protection system is also used in the rod block circuitry.

Half of the total monitors (SRM, IRM, APRM, and RBM) provide inputs to one of the RMCS rod block logic circuits and the remaining half provide inputs to the other RMCS rod block logic circuit. Two APRM channels provide recirculation flow upscale rod blocks to one logic circuit; the other two APRM channels provide recirculation flow upscale rod block signals to the other logic circuit.

Flow comparison is performed within the RBM but is processed as an alarm only since the RBM rod block cautions are power and not flow dependent]

Scram discharge volume high water level signals are provided as inputs into both of the two rod block logic circuits. Both rod block logic circuits sense when the high water level scram trip for the scram discharge volume is bypassed.

The rod insert block from the rod worth minimizer function prevents energizing the insert bus for both notch insertion and continuous insertion.

The RBM rod block settings are varied as a function of Reactor Thermal Power. Analyses show that the selected settings are sufficient to avoid both reactor protection system action and local fuel damage as a result of a single control rod withdrawal error. Mechanical switches in the SRM and IRM detector drive systems provide the position signals used to indicate that a detector is not fully inserted. Additional detail on all the neutron monitoring system trip channels is available in Subsection 7.6.1a.5. The rod block from Scram Discharge Volume high water level comes from one of two float type level switches installed in each of two scram discharge instrument volumes. The second float switch in each instrument volume provides a control room annunciation of increasing level below the level at which a rod block occurs.

7.7.1.2.6.2 Rod Block Function

The following discussion describes the various rod block functions and explains the intent of each function. The instruments used to sense the conditions for which a rod block is provided are discussed later. Figure 7.7-4 shows all the rod block functions on a logic diagram. The rod block functions provided specifically for refueling situations are described in Subsection 7.7.1.10.

Rod block signals from safety-related systems are brought into the RMCS through optical isolators. Rod motion permissive for each rod block function is signaled by an illuminated LED. The light from this LED affects the conductive state of a transistor across a separation zone. Opening of the rod block relay contact, failure of the LED, or failure of the power supply will extinguish the LED and remove the rod motion permissive.

(1) With the mode switch in the SHUTDOWN position, no control rod can be withdrawn. This enforces compliance with the intent of the shutdown mode.

(2) The circuitry is arranged to initiate a rod block regardless of the position of the mode switch for the following conditions:

a. Any average power range monitor (APRM) Simulated Thermal Power Upscale rod block alarm. The purpose of this rod block function is to avoid conditions that would require reactor protection system action if allowed to proceed. The APRM Simulated Thermal Power Upscale rod block alarm setting is selected to initiate a rod block before the APRM Neutron Flux – High or Simulated Thermal Power-High scram setting is reached.

b. Any APRM inoperative alarm. This assures that no control rod is withdrawn unless the average power range neutron monitoring channels are either in service or correctly bypassed.

c. Any APRM LPRM low count alarm. This ensures that no control rod is withdrawn unless the average power range neutron monitoring channels have the required number of LPRM inputs to be considered operable.

d. Either recirculation flow upscale or APRM inoperative alarm. This assures that no control rod is withdrawn unless the recirculation flow transmitters are operable.

e. Recirculation flow comparator alarm or RBM inoperable. This assures that no control rod is withdrawn unless the difference between the outputs of the flow transmitters is within limits.

f. Scram discharge volume high water level. This assures that no control rod is withdrawn unless enough capacity is available in the scram discharge volume to accommodate a scram. The setting is selected to initiate a rod block earlier than the scram that is initiated on scram discharge volume high water level.

g. Scram discharge volume high water level scram trip bypassed. This assures that no control rod is withdrawn while the scram discharge volume high water level scram function is out of service. The scram discharge volume high water level scram is only bypassed in shutdown and refuel.

h. The rod worth minimizer (RWM) function of the process computer can initiate a rod insert block, a rod withdrawal block, and a rod select block. The purpose of this function is to reinforce procedural controls that limit the reactivity worth of control rods under lower power conditions. The rod block trip settings are based on the allowable control rod worth limits established for the design basis rod drop accident. Adherence to prescribed control rod patterns is the normal method by which this reactivity restriction is observed. Additional information on the rod worth minimizer function is available in Subsection 7.7.1.2.8.

i. Rod position information system malfunction. This assures that no control rod can be withdrawn unless the rod position information system is in service.

j. Rod movement timer malfunction during withdrawal. This assures no control rod can be withdrawn unless the timer is in service.

k. Either rod block monitor (RBM) upscale alarm. This function is provided to stop the erroneous withdrawal of a control rod so that local fuel damage does not result. Although local fuel damage poses no significant threat in terms of radioactive material released from the nuclear system, the trip setting is selected so that no local fuel damage results from a single control rod withdrawal error during power range operation.

l. Either RBM inoperative alarm. This assures that no control rod is withdrawn unless the RBM channels are in service or correctly bypassed.

(3) With the mode switch in the RUN position, any of the following conditions initiates a rod block.

a. Any APRM downscale alarm. This assures that no control rod will be withdrawn during power range operation unless the average power range neutron monitoring channels are operating correctly or are correctly bypassed. All unbypassed APRMs must be on scale during reactor operations in the RUN mode.

b. Either RBM downscale alarm. This assures that no control rod is withdrawn during power range operation unless the RBM channels are operating correctly or are

correctly bypassed. Unbypassed RBMs must be on scale during reactor operations in the RUN mode.

c. Any APRM recirculation flow upscale alarm [*or any recirculation flow comparison alarm]*. This ensures that the no control rod is withdrawn unless the APRM recirculation flow signals are operable and the flow rate is not unusually high.

(4) With the mode switch in the STARTUP or REFUEL position, any of the following conditions initiates a rod block:

a. Any source range monitor (SRM) detector not fully inserted into the core when the SRM count level is below the retract permit level and any IRM range switch on either of the two lowest ranges. This assures that no control rod is withdrawn unless all SRM detectors are correctly inserted when they must be relied on to provide the operator with neutron flux level information.

b. Any SRM upscale level alarm. This assures that no control rod is withdrawn unless the SRM detectors are correctly retracted during a reactor startup. The rod block setting is selected at the upper end of the range over which the SRM is designed to detect and measure neutron flux.

c. Any SRM downscale alarm. This assures that no control rod is withdrawn unless the SRM count rate is above the minimum prescribed for low neutron flux level monitoring. This rod block is bypassed automatically when all unbypassed IRM channels are above Range 2.

d. Any SRM inoperative alarm. This assures that no control rod is withdrawn during low neutron flux level operations unless neutron monitoring capability is available in that all SRM channels are in service or correctly bypassed.

e. Any intermediate range monitor (IRM) detector not fully inserted into the core. This assures that no control rod is withdrawn during low neutron flux level operations unless proper neutron monitoring capability is available in that all IRM detectors are correctly located.

f. Any IRM upscale alarm. This assures that no control rod is withdrawn unless the intermediate range neutron monitoring equipment is correctly upranged during a reactor startup. This rod block also provides a means to stop rod withdrawal in time to avoid conditions requiring reactor protection system action (scram) in the event that a rod withdrawal error is made during low neutron flux level operations.

g. Any IRM downscale alarm except when range switch is on the lowest range. This assures that no control rod is withdrawn during low neutron flux level operations unless the neutron flux is being correctly monitored. This rod block prevents the continuation of a reactor startup if the operator upranges the IRM too far for the existing flux level. Thus, the rod block ensures that the intermediate range monitor is on scale if control rods are to be withdrawn.

h. Any IRM inoperative alarm. This assures that no control rod is withdrawn during low neutron flux level operations unless neutron monitoring capability is available in that all IRM channels are in service or are correctly bypassed.

7.7.1.2.6.3 Rod Block Bypasses

To permit continued power operation during repair or calibration of equipment for selected functions that provide rod block interlocks, a limited number of manual bypasses are permitted as follows:

1 SRM Channel
2 IRM Channels (1 on Bus A and 1 on Bus B)
1 APRM Channel
1 RBM Channel

The permissible IRM bypasses are arranged as two groups of equal numbers of channels. One manual bypass is allowed in each group. The groups are chosen so that adequate monitoring of the core is maintained with one channel bypassed in each group. The arrangement allows the bypassing of one IRM in each rod block logic circuit. One of the four APRM channels can be bypassed at any time. The assignment of LPRMs to APRM channels is chosen so that adequate monitoring of the core is maintained with an APRM channel bypassed.

These bypasses are affected by positioning switches in the control room. A light in the control room indicates the bypassed condition.

An automatic bypass of the SRM detector position rod block is effected as the neutron flux increases beyond a preset low level on the SRM instrumentation. The bypass allows the detectors to be partially or completely withdrawn as a reactor startup is continued.

An automatic bypass of the RBM rod block occurs when the power level is below a preselected level or when a peripheral control rod is selected. Either condition indicates that local fuel damage is not threatened and that RBM action is not required.

The rod worth minimizer and rod sequence control rod block function is automatically bypassed when reactor power increases above a preselected value in the power range. It can be manually bypassed for maintenance at any time.

7.7.1.2.6.4 Rod Block Interlocks

Figure 7.7-2 and Dwgs. M1-C51-2, Sh. 1, M1-C51-2, Sh. 2, M1-C51-2, Sh. 3, M1-C51-2, Sh. 4, M1-C51-2, Sh. 5, M1-C51-2, Sh. 6, and M1-C51-2, Sh. 7, show the rod block interlocks used in the reactor manual control system. Figure 7.7-2 shows the general functional arrangement of the interlocks. Dwgs. M1-C51-2, Sh. 1, M1-C51-2, Sh. 2, M1-C51-2, Sh. 3, M1-C51-2, Sh. 4, M1-C51-2, Sh. 5, M1-C51-2, Sh. 6, and M1-C51-2, Sh. 7 show in greater detail the rod blocking functions that originate in the neutron monitoring system.

7.7.1.2.6.5 Redundancy

The same grouping of neutron monitoring equipment, SRM, IRM, APRM, and RBM, that is used in the reactor protection system is also used in the rod block circuitry. Half of the total monitors, SRM, IRM, APRM, and RBM, provide inputs to one of the rod block logic circuits with the remaining half providing inputs to the redundant logic circuit.

Two APRM channels provide recirculation flow upscale inputs to one rod block logic circuit with the remaining two providing inputs to the redundant logic circuit.

Scram discharge volume high water level signals are provided as inputs into both of the two rod block logic circuits. Both the redundant rod block logic circuits sense when the high water level scram trip for the scram discharge volume is bypassed. The rod withdrawal block from the rod worth minimizer trip affects both rod block logic circuits. The rod insert block from the rod worth minimizer function prevents energizing the insert bus for both notch insertion and continuous insertion. The APRM rod block settings are varied as a function of recirculation flow. Analyses show that the selected settings are sufficient to avoid both reactor protection system action and local fuel damage as a result of a single control rod withdrawal error. Mechanical switches in the SRM and IRM detector drive systems provide the position signals used to indicate that a detector is not fully inserted. The rod block from scram discharge volume high water level utilizes one non-indicating float switch installed on the scram discharge volume. A second float switch provides a main control room annunciation of increasing level.

The rod block circuitry is effective in preventing rod withdrawal, if required, during both normal (notch) withdrawal and continuous withdrawal. If a rod block signal is received during a rod withdrawal, the control rod is automatically stopped at the next notch position, even during a continuous rod withdrawal. It is designed so that no single failure can prevent a rod block.

The components used to initiate rod blocks in combination with refueling operations provide rod block trip signals to these same rod block circuits. These refueling rod blocks are described in Subsection 7.7.1.10.

7.7.1.2.6.6 Testability

On-line testability of the systems and indication of bypassed or inoperable status of the system is provided.

7.7.1.2.6.7 Environmental Considerations

The equipment is mounted in the control room and will not see design basis accidents or anticipated operational occurrence environments.

7.7.1.2.6.8 Operational Considerations

The rod block trips prevent an operator from withdrawing rods if the associated equipment is not capable of monitoring core response or if unchecked, the withdrawals might require a protective system action (scram). There are no special operational considerations.

7.7.1.2.7 Rod Sequence Control System (RSCS) – Subsystem of RMCS - Instrumentation Controls

The NRC original requirement for the RSCS was based on the perceived inability of the RWM to prevent the consequences of a CRDA. The NRC SE for NEDE-24011, "General Electric Standard Application for Reactor Fuel", revision 8, Amendment 17, dated 12/27/87 addressed this issue and determined that operation without the RSCS was acceptable. When SSES implemented the Improved Tech Specs (ITS), NRC approval was granted to remove the RSCS fro the TS. The RSCS has been removed from Unit 1 per EC 964987 and Unit 2 per EC 935947.

7.7.1.2.8 Rod Worth Minimizer (RWM) - Instrumentation and Controls

7.7.1.2.8.1 System Identification

The RWM uses the process computer described in Subsection 7.7.1.7. Only the RWM portion will be discussed here.

7.7.1.2.8.2 Power Sources

The power for the RWM is supplied from the 120 VAC instrument bus.

7.7.1.2.8.3 Equipment Design

The rod worth minimizer (RWM) function assists and supplements the operator with an effective backup control rod monitoring routine that enforces adherence to established startup, shutdown, and low power level control rod procedures. The rod worth minimizer portion of the computer prevents the operator from establishing control rod patterns that are not consistent with prestored RWM sequences by initiating appropriate rod select block, rod withdrawal block, and rod insert block interlock signals to the reactor manual control system rod block circuitry (see Figure 7.7-2). The RWM sequences stored in the computer memory are based on control rod withdrawal procedures designed to limit (and thereby minimize) individual control rod worths to acceptable levels as determined by the design basis rod drop accident.

The RWM function does not interfere with normal reactor operation, and in the event of a failure does not itself cause rod patterns to be established. The RWM need not function upon loss of offsite power. The RWM function can be bypassed and its block function can be disabled only by specific procedural control initiated by the operator.

The following operator and sensor inputs are utilized by the RWM:

(1) Rod Test Sequence

By selecting this input option, the operator is permitted to withdraw and reinsert any one control rod in the core while all other control rods are maintained in the fully inserted position.

(2) Normal/Bypass Mode

A keylock switch permits the operator to apply permissives to RWM rod block functions at any time during plant operation.

(3) System Initialize

This input is initiated by the operator to start or restart the RWM programs and system at any time during plant operation.

(4) Control Rod Selected

Binary coded identification of the control rod selected by the operator.

(5) Control Rod Position

Binary coded identification of the selected control rod position.

(6) Control Rod Drive Selected and Driving

The RWM program utilizes this input as a logic diagnostic verification of the integrity of the rod select input data.

(7) Control Rod Drift

The RWM program recognizes a position change of any control rod using the control rod drift signal input.

(8) Reactor Power Level

Core average power is used to implement two digital inputs to permit program control of the RWM function. These two inputs, the low power setpoint and the low power alarm setpoint, are used to disable the RWM function at power levels above the intended service range of the RWM function.

(9) Permissive Echoes

Rod withdraw and rod insert permissive echo inputs are utilized by the RWM as a verification "echo" feedback to the system hardware to assure proper response of an RWM output.

(10) Diagnostic Inputs

The RWM utilizes selected diagnostic inputs to verify the integrity and performance of the processor.

7.7.1.2.8.4 System Interface Relationship

Isolated contact outputs to plant instrumentation provide RWM block functions to the reactor manual control system to permit or inhibit selection, withdrawal, or insertion of a control rod. These actions do not affect any normal instrumentation displays associated with the selection of a control rod (see Dwgs. M1-C12-90, Sh. 4 and M1-C12-110, Sh. 8).

7.7.1.2.8.5 Operational Considerations

The RWM control panel provides the following indication:

(1) Insert Error

Control rod coordinate identification for as many as two insert errors.

(2) Withdrawal Error

Control rod coordinate identification for one withdrawal error.

(3) Latched Group

Identification of the RWM sequence group number currently enforced by the computer.

(4) Rod Test Select

Indications that the rod test function test selected by the operator was honored by the RWM Program.

(5) RWM Bypass

Indication that the RWM is manually bypassed.

(6) Select Error

Indication of a control rod selection error.

(7) Blocks

Indication that a selection block, withdrawal block, or insertion block is in effect for all control rods.

(8) Out of Sequence

Indication that the actual control rod pattern is out of sequence with the RWM sequence currently being monitored while the reactor is operating above the low power setpoint but below the low power alarm setpoint.

7.7.1.3 Recirculation Flow Control System - Instrumentation and Controls

7.7.1.3.1 System Identification

7.7.1.3.1.1 General

The objective of the recirculation flow control system is to control reactor power level, over a limited range, by controlling the flow rate of the reactor recirculating water.

See Figures 7.7-7 and 7.7-8. The control involves varying the speed of the recirculation pumps by changing the voltage and frequency of the AC supply to each pump motor. The AC supply is provided by a motor-generator (M-G) set for each pump. Each M-G set consists of a squirrel cage induction motor driving a variable frequency generator through a variable speed converter. The generator output is modulated by varying the slip within the converter. Since flow rate is directly proportional to pump speed, which is proportional to generator speed, generator speed is considered the controlled variable of the system. The recirculation flow control is provided by means of reactor recirculation pump speed control. This pump speed control is performed as part of a digital Integrated Control System combining the aspects of recirculation pump speed control, reactor feedwater level control, and reactor feedpump turbine speed control. The reactor recirculation pump speed control is designed to be operated either manually or automatically given Operator input. The Integrated Control System is designed to limit the range and rate of pump speed and to otherwise ensure proper operational and equipment protection.

7.7.1.3.1.2 Classification

This system is a power generation system and is classified as not related to safety.

7.7.1.3.1.3 Reference Design

The recirculation flow control system is an operational system and has no safety function; therefore, there are no safety differences between this system and those of the above referenced facilities. This system is functionally identical to the referenced system.

7.7.1.3.2 Power Sources

The digital Integrated Control System power is provided by separate redundant 120 VAC field power sources. These power inputs supply the digital Integrated Control System primary and secondary power sources which in turn provide inputs to the data transfer switches and internal panel power sources required for the digital integrated control instrumentation. Each field primary power source receives its normal power supply from the appropriate ESS 480VAC power system. The internal panel power secondary source is always on demand so that upon loss of the primary source, a seamless transfer occurs which allows for the Integrated Control System continued operation.

7.7.1.3.3 Equipment Design

7.7.1.3.3.1 General

Reactor recirculation flow is changed by adjusting the speed of the two reactor recirculating pumps. This is accomplished by adjusting the frequency and voltage of the electrical power supplied to the recirculation pump motor (see Figure 7.7-8). Control of pump speed, and thus core flow, is such that at various control rod patterns, different power level changes can be accommodated. For a 100% rod pattern, power change control down to approximately 65 percent of full power is possible by use of flow variation. At other rod patterns, power control is possible down to approximately 65 percent of the maximum operating power level for that rod pattern. Thus, the power control range is approximately a constant fraction of operating power but a variable absolute power range.

A lower limit exists on flow control capability, below which automatic control by flow is not permitted. An increase in recirculation flow temporarily reduces the void content of the moderator by increasing the flow of coolant through the core. The additional neutron moderation increases the reactivity of the core, which causes the reactor power level to increase. The increased steam generation rate increases the steam volume in the core with a consequent negative reactivity effect, and a new steady-state power level is established. When recirculation flow is reduced, the power level is reduced in the reverse manner.

7.7.1.3.3.2 Pump Drive Motor Control

For operation, each recirculation pump motor has its own motor-generator set for a power supply. A variable speed converter is provided between the M-G set motor and generator. To change the speed of the reactor recirculation pump, the variable speed converter varies the generator speed by changing the position of a scoop tube positioner which changes the frequency and magnitude of the voltage supplied to the pump motor to give the desired pump speed.

A digital Integrated Control System provides demand input to the M-G set scoop tube positioner for proper positioning of the scoop tube, thus controlling generator output and reactor recirculation pump speed. The reactor recirculation pump speed control is designed to allow manual and automatic speed control. Given certain plant conditions, automatic speed control is at the discretion of the operator after confirmation of plant thermal margins and limits. Automatic control is designed to allow small incremental power changes over a prescribed period of time. This automatic feature relieves operator burden during times where the plant electrical output is dictated by rated main turbine generator output limitations versus rated reactor core thermal power. Manual operation of the reactor recirculation pump speed control portion of the digital Integrated Control System is ‘always’ the default operation and can be used to override the automatic operation at any time.

7.7.1.3.3.2.1 ATWS Trip

The RPT breakers, which are between the variable frequency generator and the recirculation pump motor will trip when reactor low water level or high vessel pressure is sensed. There are two trip logic systems, each capable of tripping both pump motors. Each logic system is divisionalized and consists of two dedicated level sensors and two dedicated pressure sensors arranged in a two-out-of-two taken twice logic arrangement as shown in Dwgs. M1-B31-189, Sh. 1, M1-B31-189, Sh. 2, M1-B31-189, Sh. 3, M1-B31-189, Sh. 4, M1-B31-189, Sh. 5, and Figure 7.7-7-6. Relays actuated by the level sensors have 8 to 10 second time delays.

The two MG set drive motors are tripped consecutively after the RPT breakers are tripped. The ATWS trip is in addition to the normal motor protective trips. See Subsection 7.6.1a.8 for a discussion of RPT system instrumentation and controls.

7.7.1.3.3.3 High Frequency Motor - Generator (HFMG) Set

Each of the two M-G sets and its controls are identical. The M-G set can continuously supply power to the pump motor at any frequency between approximately 19% and 96% of the drive motor supply bus frequency. The M-G set is capable of starting the pump and accelerating it from standstill to the desired operating speed when the pump motor thrust bearing is fully loaded by reactor pressure acting on the pump shaft. The main components of the M-G set are a drive

motor, a generator, and a variable speed converter, with an actuation device to adjust the converter output speed.

(1) Drive Motor

The drive motor is an AC induction motor which drives the input shaft of the variable speed converter. The motor can operate under electrical supply variations of 5 percent of rated frequency or 10 percent of rated voltage.

(2) Generator

The variable frequency generator is driven by the output shaft of the variable speed converter. During normal operation, the generator exciter is powered by the drive motor. The excitation of the generator is provided from an auxiliary source during pump startup.

(3) Variable Speed Converter and Actuation Device

The variable speed converter transfers power from the drive motor to the generator. The variable speed converter actuator automatically adjusts the slip between the converter input shaft and output shaft as a function of the signal from the speed controller. If the speed controller signal is lost, the actuator causes the speed converter slip to remain "as is." Manual reset of the actuation device is required to return the speed converter to normal operation.

7.7.1.3.3.4 Speed Control

An Integrated Control System, Figure 7.7-8, controls the variable speed converters of both motor-generator sets. The M-G sets can be individually controlled by manual or automatic operation at the discretion of the operator. Manual mode is always the default control. (See 7.7.1.3.3.4.2 Modes of Speed Control Operation)

7.7.1.3.3.4.1 Digital Integrated Control System – Reactor Recirculation Pump Speed

The digital Integrated Control System, Reactor Recirculation Pump Speed Control, provides the capability to modulate a speed demand signal to the Recirculation Pump M-G Set Scoop Tube Positioner for proper positioning of the scoop tube. Modulation of the scoop tube positioner is the primary means of controlling M-G set speed and thus, generator output and recirculation pump speed.

The Integrated Control System (ICS) is an Intelligent Automation (I/A) distributed control system including redundant fault tolerant digital control processors (CP), required input/output (I/O) modules, a new redundant high speed fiber-optic mesh Plant Data Network (PDN) with Operator and Engineering workstations, power supplies, flat panel displays, and redundant soft control Human Machine Interface (HMI) panels. Configurable software is developed in the form of compounds, blocks, and parameters, interconnected to execute the desired control logic. The recirculation pump speed control function provides A & B recirculation MG Set speed control (multiple modes), runbacks, rundowns, channel bypasses (runback limiter initiation parameters), system operating limits and alarms, and functional control capabilities to position the scoop tubes. Process inputs are both discrete from the field and via peer-to-peer

communication within the ICS distributed architecture. The ICS also interfaces with the Plant Process Computer (PICSY).

Operator interaction with the digital Integrated Control System is via Human Machine Interface (HMI) soft-touch screen monitors.

Failure of the Integrated Control System results in main control room alarm and acts to prevent any change of slip within the variable speed converter by initiating a scoop tube lockout.

The Reactor Recirculation Pump Speed control provides several modes of plant operation to be performed at the discretion of the Control Room Operator. These modes of operation are both manual and automatic as outlined in section 7.7.1.3.3.4.2.

Startup signal generator logic within the control systems supplies the setpoint signal for speed control during M-G startup. This adjusts the M-G set variable speed converter for approximately 50 percent recirculation pump speed.

7.7.1.3.3.4.2 Modes of Speed Control Operation

The Reactor Recirculation Pump Speed Control provides the Control Room Operator with the capability of choosing manual speed control or a selection of power dependent "automatic" speed control modes. The speed control logic consists of four (4) modes of control available to the Operator at his/her discretion; Manual, Power Maneuvering, Fine Speed, and Monitor Mode. Restrictions and limits are employed for combinations of control modes for each loop of RRP speed control. Manual mode is always the default mode regardless of the selected mode.

(1) Manual

Under Manual Mode, the Operator has the capability to select the ‘A’ or ‘B’ Reactor Recirculation Pump and request an increase or decrease in speed. This is accomplished by depressing an increase or decrease ‘pushbutton’ on the HMI control panel. Manual Mode is always the default and priority mode of operation.

(2) Power Maneuvering

Upon confirming Thermal Power Limits, the Operator chooses Power Maneuvering Mode of operation. When in Power Maneuvering mode the Reactor Recirculation Pump Speed control will increase or decrease pump speed which corresponds to increase or decrease in percentages of thermal power in prescribed steps.

(3) Fine Speed Control

Fine Speed Control is normally used by the Operator when plant operation is being dictated by Main Generator rating or at high percentages of power. Fine Speed Control is used over Power Maneuvering Mode when a smaller percentage increase in power is desired.

(4) Monitor Mode

Monitor Mode is normally selected by the Operator when it is desired to closely maintain the plant within the Main Generator Capability Curve. The control system Monitor Mode decreases the reactor recirculation pump speed in successive step changes as necessary to maintain the unit within the defined Main Generator Capability Curve. Decrease in speed will occur on the 'A' or 'B' reactor recirculation pump as necessary.

Prior to selecting any power dependent operating mode and magnitude & direction of change, the Operator assesses the plant status and make the determination that the Recirculation system power changes are acceptable. For all power dependent operating modes, "System Limits" are employed to inhibit the selection of any control mode other than Manual or force the control mode to Manual in the event Total Core Flow, Loop A & B Differential Core Flow, or Core Thermal Power exceeds pre-determined administrative limits.

Each Reactor Recirculation Pump will be independently "Mode Selectable" by the Operator and each loop (A or B) can have a different mode (within established limits).

7.7.1.3.3.4.3-1 Speed Limiters and Rundown

There are two adjustable speed limiter functions in the Reactor Recirculation Pump Speed control for each M-G set. The speed limiter functions automatically limit the setpoint signal for the scoop tube position demand.

For the #1 Limiter, the signal is automatically limited if the Recirculation Pump Main Discharge Valve is not fully open, Reactor Low Water Level-3 signal is present (sensed via the Feedwater System) or the Feedwater Flow is less than 16.4% of Rated Flow. The M-G Set Generator Speed will be limited to 30% rated speed. The Basis for the discharge valve partial closure is to prevent excessive axial thrust on the Motor Thrust Bearing. The basis for Low Rx Water Level 3 is to assure sufficient NPSH. The basis for the Low Feedwater Flow requirement is also to assure sufficient NPSH. This is accomplished by actuating the circuitry on Low Feedwater Flow (less than 16.4%) with a companion 15 sec. time delay. The time delay precludes the effects of spurious flow oscillations around the setpoint. With a minimum of 16.4% Feedwater Flow or Reactor Water Level greater than Level 3, enough subcooling is provided for adequate NPSH during normal operation.

For the #2 Limiter, the signal is automatically limited if:

1. 1 of 4 operating Circulating Water Pumps trips and high Main Condenser pressure, or
2. 1 of 4 operating Condensate Pumps trips or
3. 1 of 3 operating Reactor Feed Pumps experience Low Flow Signals or
4. 1 of 6 Feedwater Heaters experience High-High Water Level Signals with a Reactor Low Water Level-4 present (sensed via the Feedwater System).

The M-G Set Generator Speed will be limited to 48% Rated Speed. The #2 Limiter functions to assure that for a Feedwater Transient or a loss of vacuum, the plant will remain on line but at a lower power level.

7.7.1.3.3.4.3-2

Runback of the reactor recirculation pumps can occur either manually by the operator or automatically. Automatic or manually initiated Runbacks will occur regardless of the MG Set speed control mode selected.

The #1 Limiter and #2 Limiter individual inputs can be manually bypassed by the Control Room Operator. A pushbutton on the HMI control panel is provided allowing the Operator to bypass the individual input for maintenance activities. An additional 120 second time delay bypass for Condensate Pump trip logic input is provided to the Reactor Recirculation Pump Speed control. This time delay allows for successful Condensate Pump start following maintenance activities.

The Reactor Recirculation Pump Speed Control provides a "Rundown" feature. This feature initiates automatic reduction in the A & B loop MG Set Speed Demand Signal (limited to 15% overall decrease) if Condenser vacuum degrades below acceptable levels or if Feedwater Demand exceeds predetermined limits (e.g. available FW Margin degraded). This feature is provided to protect the main generator and to assist the Operator in response to abnormal conditions. Should the condenser vacuum degrade to a pre-determined value, a bias signal will be initiated to rundown the reactor recirculation pumps by 5%. Should the Feedwater Demand signal exceed a pre-determined value, a signal will be initiated to rundown the reactor recirculation pumps by 10%. Both conditions occurring would result in a combined 15% rundown. The rundown will occur regardless of the MG set speed control mode selected. This new Rundown feature is bounded under the existing Limiter runbacks and mimics operator manual action in response to degrading plant conditions.

7.7.1.3.3.4.4 Recirculation Loop Starting Sequence

Each recirculation loop is started by:

(1) Opening the generator field circuit breaker.

(2) Placing the Reactor Recirculation Pump Speed Control in the manual position. The setpoint should be adjusted to give the generator speed that will be desired after the pump has started.

(3) Closing the M-G set drive motor circuit breaker.

(4) Initiating the automatic start sequence.

7.7.1.3.3.5 Testability

The M-G set, and Reactor Recirculation Pump Speed Control are functioning during normal power operation. Any abnormal operation of these components can be detected during operation. The components that do not continually function during normal operation can be tested and inspected for calibration and operability during scheduled plant shutdowns. All the recirculation flow control system components are tested and inspected according to the component manufacturers' recommendations. This can be done during scheduled shutdowns.

7.7.1.3.4 Environmental Considerations

The recirculation flow control system is not required for safety purposes, nor required to operate after the design basis accident. The system is required to operate in the normal plant environment for power generation purposes only.

The only part of the recirculation flow control equipment in the drywell is the pump motor and it is subject to the design conditions environment shown on Dwgs. C1815, Sh. 1 and C-1815, Sh. 2. The digital Integrated Control System logic control units and instrumentation are located in the main control room, upper relay room, and computer room and are subject to that environment. Refer to Table 3.11-1.

7.7.1.3.5 Operational Considerations

7.7.1.3.5.1 General Information

Indicators and alarms are provided to keep the operator informed of the status of system and equipment and to permit him to quickly determine the location of malfunctioning equipment. Temperature monitoring of the equipment is recorded and alarmed if safe levels are exceeded. Indicators are provided to show pump power requirements, M-G set speed, recirculation loop flow, valve positions, and analog control signals, all of which determine system status. Alarms are provided to alert the operator to malfunctioning control signals, excessive cooling water temperatures, inability to change pump speed, and status of M-G circulating lube oil supply.

7.7.1.3.5.2 Reactor Operator Information

Visual display consists of loop flow, valve position, MG set speed indication, and speed demand indication. In most cases, alarms are supplemented by light indicators to more closely define the problem area.

7.7.1.3.5.3 Setpoints

The subject system has no safety setpoints.

7.7.1.4 Feedwater Control System-Instrumentation and Controls

7.7.1.4.1 System Identification

7.7.1.4.1.1 General

The Feedwater Control System, as part of an Integrated Control Systems, controls the flow of feedwater into the reactor pressure vessel to maintain the water in the vessel within predetermined levels during all normal plant operating modes. The range of water level is based upon the requirements of the steam separators (this includes limiting carryover and carryunder, which affects turbine performance), and recirculation pump operation and the need to prevent exposure of the reactor core. The Feedwater Control System employs water level, steam flow, and feedwater flow as a three-element control.

Single-element control is also available based on water level only and is controlled separately from three-element control. Normally, the signal from the feedwater flow is equal to the steam flow signal; thus, if a change in the steam flow occurs, the feedwater flow follows. The steam flow

signal provides anticipation of the change in water level that will result from change in load. The level signal provides a correction for any mismatch between the steam and feedwater flow which causes the level of the water in the reactor vessel to rise or fall accordingly.

7.7.1.4.1.2 Classification

This system is a power generation system and is classified as not related to safety.

START HISTORICAL

7.7.1.4.1.3 Reference Design

Table 7.1-2 lists reference design information. The feedwater control system is an operational system and has no safety function. Therefore, there are no safety differences between this system and those of the above referenced facilities. The subject system is functionally identical to the referenced system.

END HISTORICAL

7.7.1.4.2 Power Sources

The digital Integrated Control System power is provided by separate redundant 120 VAC field power sources. These power inputs supply the digital Integrated Control System primary and secondary power sources which in turn provide inputs to the data transfer switches and internal panel power sources required for the digital integrated control instrumentation. Each field primary power source receives its normal power supply from the appropriate ESS 480VAC power system. The internal panel power secondary source is always on demand so that upon loss of the primary source, a seamless transfer occurs which allows for the Integrated Control System continued operation.

7.7.1.4.3 Equipment Design

7.7.1.4.3.1 General

During normal plant operation, the feedwater control system automatically regulates feedwater flow into the reactor vessel. The system can be manually operated (see Dwg. M1-C32-3, Sh. 1).

The feedwater flow control instrumentation measures the water level in the reactor vessel, the feedwater flow rate into the reactor vessel, and the steam flow rate from the reactor vessel. During automatic operation, these three measurements are used for controlling feedwater flow.

The optimum reactor vessel water level is determined by the requirements of the steam separators. The separators limit water carry-over in the steam going to the turbines and limit steam carry-under in water returning to the core. For optimum limitation of carry-over and carry-under, the steam separators require that the reactor vessel water level decrease functionally as reactor power level increases. The water level in the reactor vessel is maintained within ± 2.0 inches of the setpoint value during normal operation. This control capability is achieved during plant load changes by balancing the mass flow rate of feedwater to the reactor vessel with the steam flow from the reactor vessel. The feedwater flow is regulated by controlling the speed of the turbine-driven feedwater pumps to deliver the required flow to the reactor vessel.

7.7.1.4.3.2 Reactor Vessel Water Level Measurement

Reactor vessel level signal data is processed in the digital Integrated Control System. Reactor vessel level measurement is used for varying aspects of feedwater control functions including trip functions, control functions, alarm, and indication. This measurement includes input from the reactor narrow range water level instruments and upset level range instrument.

Reactor narrow range water level is monitored by three independent differential pressure transmitters. The transmitters are connected to water reference condensing chambers within the drywell. Each of the three transmitters produces an output signal (A, B, C) which represents the water level (0 to 60 inches at normal operating pressure). Only the narrow range water level provides trip inputs to the Main Turbine and Reactor Feedpump Turbines.

Additional reactor vessel level inputs are provided by upset level range instrument (0 to 180 inches at normal operating pressure) biased to compensate for effects of reactor recirculation flow and narrow range water level B biased to compensate for effects of reactor recirculation flow.

The Operator can select from two modes of reactor vessel water level measurement, 1) Auto and 2) Manual. When in Auto, predetermined inputs are averaged or selected to produce a reactor vessel level used for feedwater control. When in Manual, the Operator selects the desired level channel that will represent reactor vessel water level used for feedwater control.

7.7.1.4.3.3 Steam Flow Measurement

Steam flow is sensed at each main steamline flow restrictor by a differential pressure transmitter. The steam flow measurement is processed in the digital Integrated Control System. The main steam line flow inputs will be linearized (square rooted) and input to a total steam flow calculation, control room recorders, meters, alarms, and plant computer points. If any one of the main steam flow inputs is determined to be a bad or bypassed digital input, the input will be substituted with a value equal to the average of the three remaining main steam line flow inputs. The resultant total steam flow signal is validated against turbine 1st stage pressure which has been converted to a total steam flow. When required minimum main steam line flow signals are not available, turbine 1st stage pressure is substituted for total steam flow.

7.7.1.4.3.4 Feedwater Flow Measurement

Feedwater flow is sensed at a flow element in each feedwater line by differential transmitters. The output from the differential transmitters is processed by the digital Integrated Control System. Differential pressure transmitter inputs from the feedwater loop and reactor feedpump discharge lines are summed, averaged, and linearized (square-rooted) for a representative loop feedwater flow. Total feedwater flow is used in digital calculation, control room recorders, meters, alarms, and plant computer points. Total as well as individual feedwater flow is also used as an input to the reactor recirculation pumps (A, B) #1 speed limiter discussed in section 7.7.1.3.3.4.3

7.7.1.4.3.5 Feedwater/Level Control

The digital Integrated Control System accepts systems analog/digital inputs, processes inputs, calculates and compares the system inputs against system requirements, and then outputs

digital control signals resulting in reactor vessel feedwater level control. System functions can be controlled either manually or automatically.

During initial startup, reactor vessel level is controlled by the Feedwater Startup Bypass Valve, with pressure supplied by the condensate pump. The Startup Bypass Valve is a manually operated valve that is operated through the Integrated Control System (ICS) HMI screens. Once a main turbine bypass valve is able to be maintained open, the Low Load Valve is used for Startup Level Control. The Low Load Valve can be operated in automatic or manual through the ICS. The Low Load Valve is used to maintain the desired reactor vessel level while placing the first reactor feed pump in discharge pressure mode. The Startup Bypass Valve can be used to adjust reactor vessel level as well.

When plant conditions warrant, the digital Integrated Control system or an Operator can select single-element feedwater level control. Using selected narrow range reactor level, the control system will send a speed demand signal to the reactor feedpump turbine. Reactor feedpump turbines can be operated in manual or automatic control mode.

The reactor vessel feedwater level control system uses the three-element control to maintain reactor vessel water level within a small margin of optimum water level during plant load changes. The three-element control includes steam flow, feedwater flow, and reactor water level parameters. When plant conditions are such that main steam flow and feedwater flow are stable, the digital Integrated Control System or an Operator can select three-element feedwater level control. Reactor vessel level is compared to the level setpoint resulting in an error signal. The level error is applied, summed, with steam flow which then acts as a remote setpoint and is compared with the feedwater flow. The resulting process variable becomes the reactor feedpump turbine speed control demand. When the level error is zero, steam flow equals feedwater flow. The three element level controller is tuned to respond to level errors and “trims” the steam flow signal demand to the flow controller to restore level setpoint.

7.7.1.4.3.5.1 Interlocks

The level control system also provides interlocks and control functions to other systems. When one of the reactor feed pumps is lost, recirculation flow is reduced to within the power capabilities of the remaining reactor feed pumps. This reduction aids in avoiding a low level scram by reducing the steaming rate. Reactor recirculation flow is also reduced on sustained low feedwater flow to ensure that adequate NPSH will be provided for the recirculation system.

Interlocks from steam flow and feedwater flow are used to initiate insertion of the rod worth minimizer block. An alarm on low steam flow indicates that the above rod worth minimizer insertion interlock setpoint is being approached. Alarms are also provided for (1) high and low water level and (2) reactor high pressure. Interlocks will trip the plant turbine and feedwater pumps in event of reactor high water level.

7.7.1.4.3.6 Turbine-Driven Feedwater Pump Control

Feedwater is delivered to the reactor vessel through turbine-driven feedwater pumps, which are arranged in parallel. The turbines are driven by steam from the reactor vessel. During planned operation, the feedwater control signal from the level controller is fed to the turbine speed control systems, which adjust the speed of their associated turbines so that feedwater flow is proportional to the feedwater demand signal.

Each turbine is controlled by the digital Integrated Control System, Reactor Feedwater Pump Turbine (RFPT) Speed Control. Each RFPT is controlled by redundant control processors to maximize reliability and limit the plant to a loss of a single reactor feedpump turbine upon the loss of any one of the control processors. The reactor feedwater pump turbine speed control, in conjunction with Operator human machine interface, controls the mode of operation of each reactor feedpump turbine. If Operator initiated automatic control is not available, the turbine speed can be controlled manually. In the automatic mode, upon the loss of Feedwater Level Control required input, the reactor feedwater pump turbine speed controller will default to Manual with its output at the last known good value.

The RFPT Speed Control system is equipped with redundant primary and back-up turbine speed control processors to position the Governor Control valve. Upon failure of the primary speed control processor, the backup processor will automatically assume control and maintain the control signal to the RFPT. Failure of both speed control processors will result in a RFPT trip.

Separate independent manual trip features for the reactor feedpumps is provided. These features consist of a local manual trip switch located on elevation 676 of the turbine bldg, and a remote manual trip switch for each RFPT located in the Main Control Room.

7.7.1.4.3.7 Testability

All feedwater flow control system components can be tested and inspected according to manufacturers' recommendations. This can be done prior to plant operation and during scheduled shutdowns. Reactor vessel water level indications from the three water level sensing systems can be compared during normal operation to detect instrument malfunctions. Steam mass flow rate and feedwater mass flow rate can be compared during constant load operation to detect inconsistencies in their signals. Access to the digital Integrated Control System constants, adjustable alarming features, scaling data & settings, and function blocks is available during operation. Certain analog process inputs to the digital Integrated Control System have maintenance bypass capability to maintain component testability. When in maintenance bypass, an alarm is provided on the digital Integrated Control System human machine interface panel.

7.7.1.4.4 Environmental Considerations

The feedwater control system is not required for safety purposes, nor is it required to operate after the design basis accident. This system is required to operate in the normal plant environment for power generation purposes only. The reactor feed pumps in the turbine building experience the normal design environments listed in Table 3.11-1.

7.7.1.4.5 Operational Considerations

7.7.1.4.5.1 General Information

The digital Integrated Control System including reactor vessel feedwater level control and reactor feedpump turbine speed control is operated through human machine interface (HMI) workstations located in the main control room. At the operator’s discretion, the system can be operated either manually or automatically via the push keys indicated on the soft touch panel.

Manual or automatic operation can also be performed at the workstation located in the control structure computer room.

External to the HMI, a Reactor Feedpump Turbine manual trip switch is provided for each reactor feedpump turbine control and are located in the main control room and the turbine building elevation 676.

In event of loss of feedwater, the reactor will automatically scram as a result of low water level (trip level 3). Reactor water level will continue to decrease until low water level (trip level 2) is reached. The Loss-of-Feedwater analysis in Section 15.2.7 conservatively assumes that main steam isolation valve closure initiates at Level 2; however, MSIVs would not actually close until reactor vessel water level reaches Level 1. MSIV closure is not expected for the Loss-of-Feedwater transient because water level would not reach Level 1 with HPCI and RCIC operable. HPCI and RCIC systems automatically start and water level will be maintained.

7.7.1.4.5.2 Reactor Operator Information

Indicators and alarms, provided to keep the operator informed of the status of the system, are as noted in previous subsections.

7.7.1.4.5.3 Setpoints

The subject system has no safety setpoints.

7.7.1.5 Pressure Regulator and Turbine-Generator Control System

7.7.1.5.1 Power Generation Design Bases

The pressure regulator and turbine-generator control system must maintain a constant turbine inlet pressure (within the range of the regulator controller proportional load setting). In conjunction with the reactor recirculation flow control system, the reactor pressure is controlled from startup, through normal operation, and to shutdown.

The control system must control the speed and the acceleration of the turbine from zero to 100 percent of rated speed.

The control system must match the nuclear steam supply to the steam requirements as determined by the load requirement.

A block diagram of the turbine controls is shown in Figure 7.7-15.

7.7.1.5.2 Power Sources

Power for the pressure regulator and turbine-generator control system is supplied by a 120 VAC, 60 Hz, single phase, uninterruptible power supply and a 125 VDC station battery. See Subsections 8.3.1.8 and 8.3.2.1.1.8.

A permanent magnet generator (PMG) on the turbine shaft supplies 115 VAC, 3 phase, 420 Hz for speeds above 1800 RM.

7.7.1.5.3 Equipment Design

7.7.1.5.3.1 System Description

The turbine-generator control system is a GE Mark I Electrohydraulic Control (EHC) system. Solid state control circuitry in combination with high pressure hydraulic systems provide schemes for turbine steam pressure regulation, steam bypassing to condenser, turbine speed controlling, and load following capability.

7.7.1.5.3.2 Steam Pressure Control

The steam pressure control unit compares the actual main steam pressure with the desired reference pressure, determined by the load requirement, and generates a total steam flow demand.

The pressure reference signal is produced by a motor-operated device that can be operated by local pushbuttons or remote control signals.

The modified pressure error signal is produced twice by redundant devices. The two pressure error signals are fed into a gating circuit that accepts the lower pressure as a control signal with the higher becoming the backup.

The steam pressure control unit provides the control valve flow signal and bypass control unit and automatic load following signals.

7.7.1.5.3.3 Steam Bypass System

The steam bypass control unit compares the desired control valve flow signal with the total steam flow signal. The resulting error signal which is biased from 5 to 15% to prevent continuous opening and closing of the bypass valves provides the desired bypass valve flow signal.

The bypass valve jack is a motor-operated device used for setting a bypass valve position reference during startup and shutdown of the reactor. This motor-operated device can be operated by local pushbuttons or remote control signals.

Limit signals are also produced by the maximum combined flow limit and the condenser vacuum pressure switches.

7.7.1.5.3.4 Turbine Speed System/Load Control System

The speed control unit compares the actual turbine speed with the desired speed reference, and the actual acceleration with the desired acceleration reference to provide an error signal to the load control unit.

When the speed reference signal changes by a step, the acceleration control takes over to accelerate the turbine, at the selected rate, to the new speed reference. Upon a decrease of the speed reference, the turbine will coast down with the valves closed. The valves will reopen when the new desired speed is reached.

Because of the extreme importance in safeguarding against overspeed, the speed control unit has two redundant channels. Loss of both speed signals will shut down the turbine.

The load control unit provides flow control signals to the control valves and intercept valves, and modified speed error and load reference signals to the automatic load following circuit.

The load reference signal is produced by a motor-operated device that can be operated by local pushbuttons or remote control signals.

The load reference device can be calibrated for rated speed and steam conditions independent of speed regulation. When the generator is not on the line, the load reference signal is a speed adjustment and is used for synchronizing the turbine.

When the generator loses the electrical load, the load control unit initiates the action to rapidly close the control valves and the intercept valves to essentially stop the steam flow to the turbine.

7.7.1.5.3.5 Turbine Generator to Reactor Protection System Interface

Two conditions initiate reactor scram, turbine stop valve closure, and turbine control valve fast closure when reactor power is above 26 percent of rated.
The turbine stop valve closure signal is generated before the turbine stop valves have closed more than 10 percent. This signal originates from position switches that sense stop-valve motion away from fully open. Four limit switches are provided equally among the turbine stop valves. The switches are closed when the stop valves are fully open and open within 10 milliseconds after the setpoint is reached. The switches are electrically isolated from each other and from other turbine plant equipment.

The control valve fast closure signal is generated by four turbine oil line pressure switches which sense hydraulic oil pressure decay. This signal is developed utilizing one-out-of-two taken twice relay logic. The switches are closed when the valves are open and open within 30 milliseconds after the control valves start to close in a fast closure mode.

Four turbine first-stage pressure switches, which measure equivalent steam flow, are provided for bypassing the stop valve closure and control valve fast closure inputs at reactor power levels below 26 percent.

7.7.1.5.3.6 Turbine-Generator to Main Steam Isolation System Interface

The turbine-generator interfaces with the main steam isolation system through the condenser vacuum switches. Four independent main condenser vacuum switches provide isolating signals to the main steam isolation valves. Each vacuum switch has its own isolation (root valve) and pressurizing source connection for testing. Pressure switch contacts open on low vacuum. Condenser vacuum switches are also discussed in Subsection 7.3.1.1a.2.4.1.13.

7.7.1.5.3.7 Inspection and Testing

Testing controls are provided for testing the turbine valve reactor protection system interface signal switches.

Each stop valve is individually stroked to full closure.

One control valve fast closure hydraulic oil pressure switch is actuated at a time by actuating test valves in the pressure switch sensing line.

Each main condenser low vacuum switch is individually tested.

7.7.1.5.4 Environmental Considerations

The turbine-generator control system is required to operate in the normal plant environment for power generation purposes only.

Instruments and controls on the turbine experience the turbine building normal design environment as listed in Table 3.11-1.

The logic, remote control units, and instrument terminals located in the control structure experience the environment as listed in Table 3.11-1.

7.7.1.5.5 Operational Considerations

Process variables which are controlled by the pressure regulator and speed/load control systems are displayed on the turbine-generator section of the main control board. Manual and automatic control modes for the various turbine-generator operational modes (such as startup, normal operation, and shutdown) are available to the operator from the main control board. Auto display lights are provided to inform the operator of the operating mode of the turbine-generator unit.

In the event of control malfunction during an automatic control mode, control is transferred to the manual mode, with an alarm to alert the operator of the condition.

7.7.1.6 Neutron Monitoring System - Traversing In-core Probe (TIP) Subsystem - Instrumentation and Controls

7.7.1.6.1 System Identification

7.7.1.6.1.1 General

Flux readings along the axial length of the core are obtained by fully inserting the traversing ion chamber into one of the calibration guide tubes, then taking data as the chamber is withdrawn. The data goes directly to the computer. One traversing chamber and its associated drive mechanism is provided for each group of up to nine fixed in-core assemblies.

The control of the subject system is discussed in this section.

7.7.1.6.1.2 Classification

This system is a power generation system, and is classified as not related to safety.

START HISTORICAL

7.7.1.6.1.3 Reference Design

Table 7.1-2 lists reference design information. The subject instrumentation and control system is an operational system and has no safety function. Therefore, there are no safety design differences between this system and those of the reference design facilities. This system is functionally identical to the referenced system.

END HISTORICAL

7.7.1.6.2 Power Sources

The power for the subject system is supplied from the instrument AC power source.

7.7.1.6.3 Equipment Design

7.7.1.6.3.1 General

The number of TIP machines is indicated in Dwgs. M1-C51-35, Sh. 1 and M1-C51-35, Sh. 2. The TIP machines have the following components:

(1) One Traversing in-core probe (TIP),
(2) One drive mechanism,
(3) One indexing mechanism, and
(4) Up to 10 in-core guide tubes.

The subsystem allows calibration of LPRM signals by correlating TIP signals to LPRM signals as the TIP is positioned in various radial and axial locations in the core. The guide tubes inside the reactor are divided into groups. Each group has its own associated TIP machine.

7.7.1.6.3.2 Equipment Arrangement

A TIP drive mechanism uses a fission chamber attached to a flexible drive cable (Figure 7.7-14). The cable is driven from outside the drywell by a gearbox assembly. The flexible cable is contained by guide tubes that penetrate the reactor core. The guide tubes are a part of the LPRM detector assembly. The indexing mechanism allows the use of a single detector in any one of ten different tube paths. The 10th tube is used for TIP cross calibration with the other TIP machines. The control system provides for both manual and semi-automatic operation. Electronics of the TIP panel amplify and display the TIP signal. Core position versus neutron flux is recorded on an X-Y recorder on a backrow panel in the main control room and is provided to the computer. Actual operating experience has shown the system to reproduce within 1.0% of full scale in a sequence of tests (Reference 7.7-1).

The TIP system equipment is placed outside but must penetrate an area where containment integrity is needed, the following TIP isolation system is provided. A valve system is provided with a valve on each guide tube entering the drywell. These valves are closed except when the TIP is in operation. A ball valve and a cable shearing valve are mounted in the guide tubing just outside the drywell. They maintain the leak tightness integrity of the drywell. A valve is also provided for a

nitrogen gas purge line to the indexing mechanisms. A guide tube ball valve opens only when the TIP is being inserted. The shear valve is used only if a leak occurs when the TIP is beyond the ball valve and power to the TIP fails. The shear valve, which is controlled by a manually operated keylock switch, can cut the cable and close off the guide tube. The shear valves are actuated by detonation squibs.

The continuity of the squib circuits is monitored by indicator lights in the main control room. Upon receipt of containment isolation command from the NSSS, all machines are put in automatic full speed withdraw condition, removing the TIP detector from the containment and allowing the ball valves to close. The purge valve is also closed at this time. Manual reset is required to reopen the ball valves after an isolation signal has been cleared.

7.7.1.6.3.3 Testability

The TIP equipment is tested and calibrated using heat balance data and procedures described in the instruction manual.

7.7.1.6.4 Environmental Considerations

The equipment and cabling located in the drywell are designed for the environments described in Section 3.11.

7.7.1.6.5 Operational Considerations

The TIP can be operated during reactor operation to calibrate the APRMs. The subject system has no safety setpoints.

7.7.1.7 Plant Integrated Computer System and Reactor Data Analysis System (RDAS) Instrumentation

The plant computer and RDAS systems are identified below. For initial cores, the NSS plant computer will perform the periodic core performance evaluations. For reload cores the RDAS will perform the periodic core performance evaluations.

7.7.1.7.1 System Identification

The Plant Integrated Computer System consists of the following:

1. Generation and Updates of displays
2. NSSS Calculations
3. Balance of Plant Calculations
4. Historical Recording

The following computer system provides additional NSS information:

5. Reactor Data Analysis System

7.7.1.7.1.1 General Objectives

The objectives of the Plant Integrated Computer System are to monitor unit operation, generate graphic displays for operator use and optimize operator surveillance, perform BOP calculations, log data, make historical records, generate graphic displays and alarm status summary display, and provide off line capabilities. The objectives of the Plant Integrated Computer System and the RDAS computer system are to provide a quick and accurate determination of core thermal performance; to improve data reduction, accounting, and logging functions; and to supplement procedural requirements for control rod manipulation during reactor startup and shutdown.

7.7.1.7.1.2 Classification

The Plant Integrated Computer System and RDAS are classified as non-safety related.

7.7.1.7.1.3 Reference Design

Table 7.1-2 lists similarities of reference design information for Susquehanna SES compared to other plants.

7.7.1.7.2 Power Sources

The power for the Plant Integrated Computer System and RDAS is supplied from a designated uninterruptible power supply backed up by an engineered safeguard supply (standby power). See Subsection 8.3.1.8.

7.7.1.7.3.1 System Description

The Plant Integrated Computer System is a multi-processor computer system linked together via network technology.

The RDAS consists of two fully redundant processors (see Subsection 7.7.1.7.3.1.1).

7.7.1.7.3.1.1 Reactor Data Analysis System

RDAS consists of the following units:

Two Central Processing Units (CPU)
Disk Memory
Magnetic Tape Memory Drives

One CPU typically will monitor data from both the Unit 1 and Unit 2 Plant Integrated Computer Systems and perform NSS calculations using the Powerplex software. The second CPU serves as a backup to the other computer and typically will handle user requests for off line calculations. Both CPUs are connected to the Plant Integrated Computer Systems network by fiber optic cable.

7.7.1.7.3.2 Testability

The NSS computer system has some self-checking provisions. It performs diagnostic checks to determine the operability of certain portions of the system hardware and performs internal

programming checks to verify that input signals and selected program computations are either within specific limits or within reasonable bounds.

7.7.1.7.4 Environmental Considerations

All the computer equipment, is designed for continuous duty up to 95°F, 80% relative humidity ambient. This equipment is installed in an air-conditioned room.

7.7.1.7.5 Operational Considerations

7.7.1.7.5.1 General Information

The local power density of every 6-inch segment for every fuel assembly is calculated by the RDAS computer system using plant inputs of pressure, temperature, flow, LPRM levels, control rod positions, and the calculated fuel exposure. Total core thermal power is calculated from a reactor heat balance. Iterative computational methods are used to establish a compatible relationship between the core coolant flow and core power distribution. The calculated results yield local power at specified axial segments for each fuel bundle in the core.

After the power distribution is calculated, the RDAS system computes the appropriate reactor core thermal margins. These most recently calculated thermal margins are compared to the Thermal Limits Surveillance Alarm (TLSA) setpoints and an alarm is annunciated when the TLSA setpoints are exceeded. The TLSA thereby assists the operator to maintain core operation within permissible thermal limits established by prescribed maximum fuel rod power density, maximum average planar linear heat generation rate, and minimum critical power ratio criteria.

The core power distribution calculation sequence is completed periodically and on demand. Subsequent to executing the program the computer prints a periodic log for record purposes.

Each minute as data is transferred from the NSS computer to the RDAS system, an analysis is performed which compares the current values of core thermal power, core flow, control rod positions, reactor pressure, and APRMs with the values from the most recently performed power distribution calculation. If the percent deviation of a selected data point exceeds a trigger limit, a new power distribution calculation is performed automatically. This trigger logic combined with TLSA setpoints provides nearly continuous core monitoring during reactor power level changes with the assurance that warning is provided when thermal operating limits are being approached.

Flux level and position data from the traversing in-core probe (TIP) equipment are read into the computer. The computer evaluates the data and determines gain adjustment factors by which the LPRM amplifier gains can be altered to compensate for exposure-induced sensitivity loss. The LPRM amplifier gains are not to be physically altered except immediately prior to a whole core calibration using the TIP system. The gain adjustment factor computations help to indicate to the operator when such a calibration procedure is necessary.

Using the power distribution data, a distribution of fuel exposure increments from the time of previous power distribution calculation is determined and is used to update the distribution of cumulative fuel exposure. Each fuel bundle is identified by batch and location, and its exposure is stored for each of the axial segments used in the power distribution calculation. These data are printed out on operator demand.

Exposure increments are determined periodically for each quarter-length section of each control rod and also for each 6" segment by RDAS. The corresponding cumulative exposure totals are periodically updated and printed out on operator demand.

The exposure increment of each local power range monitor is determined periodically and is used to update both the cumulative ion chamber exposures and the correction factors for exposure-dependent LPRM sensitivity loss. These data are printed out on operator demand.

The RDAS computer system provides on-line capability to determine monthly and on-demand isotopic composition for each fuel bundle in the core. This evaluation consists of computing the weight of one neptunium, three uranium, and five plutonium isotopes as well as the total uranium and total plutonium content. The isotopic composition is calculated for each fuel bundle and summed accordingly by bundles and batches. The method of analysis consists of relating the computed fuel exposure and average void fraction for the fuel to computer stored isotopic characteristics applicable to the specific fuel type.

7.7.1.7.5.2 Reactor Operator Information

Major components are arranged as shown in Figure 6.4-1c. Functional description and operational arrangement is as follows:

Unit Operating Benchboard (H12-P680) (Panel C651) - houses controls, annunciators and displays, including the control rod position display. The primary process displays are computer generated formats from the Plant computers. All variables in the DCS displays that are required for unit operation, startup and shutdown are displayed on hardwired indicators on either the Unit Operating Benchboard or the Standby Information Panel. These variables in both the primary process displays and hardwired indicators generally originate from the same source.

Standby Information Panel (H12-P678) (C652) - houses hardwired indicators and recorders required to startup, run, and shutdown the plant without the use of the Plant Integrated Computer System. It is a hardwired backup to the Plant Integrated Computer System.

Reactor Core Cooling System BB (H12-P601) (C601) - houses hardwired indicators, recorders, annunciators and controls for unit BOP system's functions which do not require the operator's immediate attention during normal operation of the power plant. Functions on this panel have been determined to be long time response functions.

Common Plant Benchboard (H12-P853) (C653) - houses hardwired indicators, recorders annunciators and controls for systems which are common to Units 1 and 2. It also houses two displays connected to the Plant Integrated Computer System.

Unit Monitoring Console (C92-P628) (C684) - provides the unit operator sit down surveillance of the Unit Operating Benchboard and access to Plant Integrated Computer displays.

Safety Parameter Display System/Plant Monitoring Console (C667) - provides sit down surveillance of both units and access to Plant Integrated Computer System displays and Plant Integrated Computer System Functions as well as SPDS displays.

The annunciator system is a hardwired system which provides the operator with the alarm information required for unit operation, startup, and shutdown. Although this system is

independent of the Plant Integrated Computer System, the computer system does provide redundant and auxiliary alarm information as AID's and the alarm status summary display.

The Plant Integrated Computer System collects unit process information and presents it on nine of the ten video displays on the Unit Operating Benchboard. One of these nine displays tabulates all actuated alarms. This display may be manually switched to other displays if operating conditions should require. The tenth display is used for operator I/O functions.

Approximately 60 display formats are available to the operator to present process information according to operating mode of the plant.

Plant Integrated Computer System displays are arranged by system. Each system has a set of formats. Each format is appropriate to an operating mode of the plant. The operator's designation of the plant operating mode by depressing a pushbutton will automatically cause a format appropriate to that mode to be displayed on each system display. However, the format on any display may be manually selected by the operator.

Each system format uses the bottom lines for Alarm Initiated Displays (AID). When certain variables reach a predetermined limit, (generally the limit is prior to an actual alarm or trip limit) the variable appears in the bottom lines along with other preselected variables. This display provides the operator with specific pre-trip information which is designed to allow him to take action to prevent the trip or alleviate its effects.

7.7.1.8 Reactor Water Cleanup (RWCU) System - Instrumentation and Controls

7.7.1.8.1 System Identification

7.7.1.8.1.1 General

The purpose of the reactor cleanup system instrumentation and control is to provide protection for the system equipment from overheating and overpressurization and to provide operator information concerning the effectiveness of operation of the system.

7.7.1.8.1.2 Classification

This is a power generation system and is classified as not related to safety.

START HISTORICAL

7.7.1.8.1.3 Reference Design

Table 7.1-2 lists reference design information. The subject control system is an operational system and has no safety function. Therefore, there are no safety design differences between this system and those of the reference design facilities. This system is functionally identical to the referenced system.

END HISTORICAL

7.7.1.8.2 Power Sources

The RWCU system instrumentation and controls are fed from the plant instrumentation bus. No backup power source is necessary since the RWCU system is not a safety-related system. Adequate fuse protection is provided so that a short circuit within the system will have only a local effect which can be easily corrected without interrupting the reactor operation.

7.7.1.8.3 Equipment Design

7.7.1.8.3.1 General

The reactor water cleanup system is described in Subsection 5.4.8. This subsection describes the systems used to protect the resin and the filter-demineralizer. These circuits are shown in Dwgs. M-144, Sh. 1 and M-144, Sh. 2 and the operating logic is shown in Dwg. M1-G33-143, Sh. 1.

7.7.1.8.3.2 Circuit Description

To prevent resins from entering the reactor recirculation system in the event of a filter-demineralizer resin support failure, a strainer is installed on the outlet of each filter-demineralizer unit. Each strainer is provided with a control room alarm, which is energized by high differential pressure. A bypass line is provided around the filter-demineralizer units for bypassing the units when necessary. Dwg. M-145, Sh. 1 describes the filter-demineralizer instrumentation and control.

Relief valves and instrumentation are provided to protect the equipment against over-pressurization and the resins against overheating. The system is automatically isolated and the pumps tripped for the reasons indicated when signaled by any of the following occurrences:

(1) High temperature downstream of the nonregenerative heat exchanger - to protect the ion exchange resins from deterioration due to high temperature,

(2) Reactor vessel low water level - to protect the core in case of a possible break in the reactor water cleanup system piping and equipment (see Subsection 7.3.1.1a.2.4.1.1).

(3) Standby Liquid Control System actuation - to prevent removal of the boron by the cleanup system filter-demineralizers,

(4) High cleanup system ambient room temperature - (part of the plant leak detection system),

(5) High change in system inlet flow in comparison to the system outlet flow - (part of the plant leak detection system).

(6) High differential pressure (flow) sensed in the pump suction line - (part of the plant leak detection system).

In the event of low flow or loss of flow in the system, flow is maintained through each filter-demineralizer by its own holding pump. Sample points are provided upstream and downstream of each filter-demineralizer unit for continuous indication and recording of system conductivity. High/low conductivity is annunciated in the main control room. The influent sample point is also used as the normal source of reactor coolant samples. Sample analysis also indicates the effectiveness of the filter-demineralizer units.

7.7.1.8.3.3 Testability

Because the reactor water cleanup system is usually inservice during plant operation, satisfactory performance is demonstrated without the need for any special inspection or testing beyond that specified in the manufacturer's instructions.

7.7.1.8.4 Environmental Considerations

The reactor water cleanup system is not required for safety purposes, nor required to operate after the design basis accident. The reactor water cleanup system is required to operate in the normal plant environment for power generation purposes only.

RWCU instrumentation and controls located in the RWCU equipment area are subject to the environment shown on Dwg. C-1815, Sh. 9.

7.7.1.8.5 Operational Considerations

7.7.1.8.5.1 General Information

The reactor water cleanup system-instrumentation and control is not required for safe operation of the plant. It provides a means of monitoring parameters of the system and protecting the system.

7.7.1.8.5.2 Reactor Operator Information

Refer to the RWCU system instrumentation and control Dwgs. M-144, Sh. 1, M-144, Sh. 2 and Dwg. M1-G33-143, Sh. 1.

7.7.1.8.5.3 Setpoints

Setpoints related to RWCU isolation are discussed in Subsection 7.3.1.1a.2.4.1.9.

There are no safety-related setpoints in the RWCU.

START HISTORICAL

7.7.1.9 Transient Monitoring System for Startup Testing

A General Electric Co. (GE) Transient Recording System is used as a part of Startup Testing (Low Power and Power Ascension Testing) for purposes of measurement and recording of process transients. The system is a computer-based data acquisition and analysis system called GETARS. This system will provide a permanent record (in digital format) of test results in the form of output plots from the system.

GETARS will be located within sight of the plant-operator interface area of the control room. Communications will be provided between GETARS and the operator interface area.

7.7.1.9.1 Transient Monitoring System (TMS) Description

The equipment for providing and conditioning of transient signals for GETARS is called the Transient Monitoring System (TMS). The scope of this system includes permanent mounting of

devices in NSSS and non-NSSS panels and permanent installation of signal cables from the systems panels to a permanent control room panel. This panel collects and conditions the TMS signals and is called the Transient Monitoring Panel (TMP).

7.7.1.9.2 Piping Thermal Expansion and Vibration Measurement

Measurements of piping thermal expansion and vibration during startup testing is handled by the use of multiplexing signals directly to GETARS. Signal conditioning and multiplexers are provided as packages and use cable from each multiplexer (one inside containment and one outside) to a master receiver that interfaces with GETARS. Instrumentation and multiplexers are temporarily installed and will be removed at the conclusion of the testing. Neither the equipment nor the cable used for these measurements are safety related.

END HISTORICAL

7.7.1.10 Refueling Interlocks System - Instrumentation and Controls

7.7.1.10.1 System Identification

The purpose of the refueling interlocks system is to restrict the movement of control rods and the operation of refueling equipment to reinforce operational procedures that prevent the reactor from becoming critical during refueling operations.

This equipment is not required to operate during a seismic event. The operability of the equipment can be verified after a seismic event without jeopardizing safety.

7.7.1.10.2 Power Sources

There is only one source of power for both channels of the logic circuits (see Subsection 7.7.1.10.3.2). However, this power source supplies the Control Rod Drive System as well. A failure of this power supply will prevent any rod motion.

7.7.1.10.3 Equipment Design

7.7.1.10.3.1 Circuit Description

The refueling interlocks circuitry senses the condition of the refueling equipment and the control rods. Depending on the sensed condition, interlocks are actuated to prevent the movement of the refueling equipment or withdrawal of control rods (rod block). Circuitry is provided to sense the following conditions:

(1) All rods inserted (see Subsection 7.7.1.10.3.2)
(2) Refueling platform positioned near or over the core
(3) Refueling platform hoists loaded (fuel grapple, frame-mounted hoist, trolley-mounted hoist)
(4) Service platform hoist bypass plug plugged in, and
(5) Reactor Mode Switch in "Refuel" position

7.7.1.10.3.2 Logic and Sequencing

The indicated conditions are combined in logic circuits to satisfy all restrictions on refueling equipment operations and control rod movement (Figure 7.7-2). A two-channel circuit indicates that all rods are in. The rod-in condition for each rod is established by the closure of a magnetically operated reed switch in the rod position indicator probe. The rod-in switch must be closed for each rod before the all-rods-in signal is generated. This is not the same switch that provides rod position information to the process computer and four rod position display. Both channels of RMCS activity control must register the all-rods-in signal in order for the refueling interlock circuitry to indicate the all-rods-in condition.

During refueling operations, no more than one control rod is permitted to be withdrawn; this is enforced by a redundant logic circuit that uses the all-rods-in signal and a rod selection signal to prevent the selection of a second rod for movement with any other rod not fully inserted. Control rod withdrawal is prevented by comparison checking between the A and B portions of the reactor manual control system and subsequent message transmission to the affected control rod. The simultaneous selection of two control rods is prevented by the multiplexing action of the rod select circuitry and by feedback which latches the selected rod's identity in a holding register. With the mode switch in the REFUEL, the circuitry prevents the withdrawal of more than one control rod and the movement of the loaded refueling platform over the core with any control rod withdrawn.

Operation of refueling equipment is prevented by interrupting the power supply to the equipment. The refueling platform is provided with two mechanical switches attached to the platform, adjacent to the platform rail. The switches open before the platform or any of its hoists are physically located over the reactor vessel to indicate the approach of the platform toward its position over the core.

Load cell read-out for the operator is provided for all hoists. The main hoist, frame-mounted auxiliary hoist and monorail auxiliary hoist load sensing is by a strain-gauge load cell with associated electronic setpoint modules and indicators.

The three hoists on the refueling platform are provided with switches that open when the hoists are fuel-loaded. The switches open at load weight that is lighter than that of a single fuel assembly. This indicates when fuel is loaded on any hoist.

7.7.1.10.3.3 Bypasses and Interlocks

The service platform is not used and has been eliminated. The bypass plug is installed in the service platform power connection box on the refuel floor. This plug bypasses the service platform hoist loaded interlock allowing control rod withdrawal with the mode switch in the STARTUP or REFUEL positions.

The rod block interlocks and refueling platform interlocks provide two independent levels of interlock action. The interlocks which restrict operation of the platform hoist and grapple provide a third level of interlock action since they would be required only after a failure of a rod block and refueling platform interlock. The strict procedural control exercised during refueling operations may be considered a fourth level of backup.

When using the opposite unit’s refueling platform on the refuel unit for fuel handling activities (U1 platform refueling U2 reactor and vice versa), the refuel unit’s idle platform may be powered from

an alternate source which does not have the RMCS refuel interlock interface. When powered from the alternate source the refuel unit's platform becomes an auxiliary work platform over the dryer-separator storage pool or reactor vessel. In this configuration, the Main Hoist on this work platform will be in a stowed position and therefore physically disabled from handling fuel. The Auxiliary Hoists (i.e., Frame and Monorail Hoists) on the work platform will be administratively controlled from operation in the vessel if the Steam Separator is removed. In addition to the RMCS refueling interlocks, any boundary zone or travel interlocks may also be defeated for the platform functioning as an auxiliary work platform.

7.7.1.10.3.4 Redundancy and Diversity

The refueling interlocks are not designed nor required to meet the IEEE 279-1971 criteria for Nuclear Power Plant Protection Systems. Failure of the refueling interlocks will neither cause an accident nor prevent safety-related systems from performing their protective actions. They are provided for use during planned refueling operations. Criticality is prevented during the insertion of fuel, provided control rods in the vicinity of the vacant fuel space are fully inserted during the fuel insertion. The interlock systems accomplish this by:

(1) Preventing operation of the loaded refueling equipment over the core whenever any control rod is withdrawn.

(2) Preventing control rod withdrawal whenever fuel loading equipment is over the core.

(3) Preventing withdrawal of more than one control rod when the mode switch is in the refuel position.

The refueling interlocks have been carefully designed utilizing redundancy of sensors and circuitry to provide a high level of reliability and assurance that the stated design bases will be met. Each of the individual refueling interlocks discussed above need not meet the single failure criterion because, for any of the "situations" listed in Table 7.7-2, a single interlock failure will not cause an accident or result in potential physical damage to fuel or result in radiation exposure to personnel during fuel handling operations.

7.7.1.10.3.5 Actuated Devices

The refueling interlocks from the Reactor Manual Control System to the refueling equipment trip a relay in the refueling equipment controls which interrupts power to the equipment and prevents it from moving over the core.

The interlocks from the refueling equipment to the Reactor Manual Control System actuate circuitry that provides a control rod block. The rod block prevents the operator from withdrawing any control rods.

7.7.1.10.3.6 Separation

The refueling interlocks are not designed to nor required to meet the IEEE 279-1971 criteria for Nuclear Power Plant Protection Systems. However, a single interlock failure will not cause an accident. Refueling interlocks and are used in conjunction with administration controls during planned refueling operations.

7.7.1.10.3.7 Testability

Complete functional testing of all refueling interlocks before any refueling outage will positively indicate that the interlocks operate in the situations for which they were designed. The interlocks can be subjected to valid operational tests by loading each hoist with a dummy fuel assembly, positioning the refueling platform, and withdrawing control rods. Where redundancy is provided in the logic circuitry, tests are performed automatically, on a periodic basis, to assure that each redundant logic element can independently perform its function.

7.7.1.10.4 Environmental Considerations

Equipment (refueling) will be subjected to the conditions shown on Dwg. C-1815, Sh. 12 during normal operation. The refueling interlocks are not required to operate under harsh ("accident") conditions.

Refueling components are capable of surviving design basis events such as earthquakes, accidents, and anticipated operational occurrences without consequential damage, but are not required to be functional during or after the event without repair.

7.7.1.10.5 Operational Considerations

7.7.1.10.5.1 General Information

The refueling interlocks system is required only during refueling operations.

7.7.1.10.5.2 Reactor Operator Information

In the refueling mode, the control room operator has an indicator light for "Select Permissive" whenever all control rods are fully inserted. He can compare this indication with control rod position data from the computer as well as control rod in-out status on the full core status display. Furthermore, whenever a control rod withdrawal block situation occurs, the operator receives annunciation. He can compare these outputs with the status of the variable providing the rod block condition. Both channels of the control rod withdrawal interlocks must agree that permissive conditions exist in order to move control rods; otherwise, a control rod withdrawal block is placed into effect. Failure of one channel may initiate a rod withdrawal block, and will not prevent application of a valid control rod withdrawal block from the remaining operable channel.

Core flux activity monitoring is provided during refueling by the SRM's and/or dunking chambers which are specified and controlled in Technical Specification 3/4.9.

On Unit –1 refueling platform, displays indicate the hoist load and hoist elevation to the operator. In addition, these displays provide bridge position, trolley position, and fault indication to the operator. An Operator Interface Console Assembly provides a touch screen, and camera control unit. Should an interlock condition occur, a message is displayed to inform the operator of the condition and what action is required to correct the situation. Manual control of all three axes, bridge, trolley and hoist, is performed using joysticks that provide infinitely variable speed commands to the motor drives.

On the Unit 2 refueling platform, the platform operator has readout indicators for the plaform x-y position relative to the reactor core in addition to a z coordinate indicator for the vertical main hoist position.

Both Unit 1 and Unit 2 refueling platforms have load cell indications of hoist loads for each of the three hoists on these platforms. Individual push button and rotary control switches are provided for local control of the platform and its hoists. The platform operator can immediately detect whether the platform and hoists are responding to his local instructions, and can, in conjunction with the control room operator, verify proper operation of each of the three levels of interlocks listed previously.

7.7.1.10.5.3 Setpoints

There are no safety setpoints associated with this system.

7.7.1.11 Neutron Monitoring System - Rod Block Monitor (RBM) Subsystem

7.7.1.11.1 Equipment Design

7.7.1.11.1.1 Description

The RBM has two channels. Each channel uses input signals from a number of LPRM channels. A trip signal from either RBM channel can initiate a rod block. One RBM channel can be bypassed without loss of subsystem function. The minimum number of LPRM inputs required for each RBM channel to prevent an instrument inoperative alarm is four when using four LPRM assemblies, three when using three LPRM assemblies, and two when using two LPRM assemblies (Figure 7.7-16). These minimum LPRM inputs are 50% of the possible LPRM inputs to each RBM for 4, 3 or 2 LPRM assemblies.

(1) Power Supply

The RBM power is received from the two 120 Vac supplies for the RPS. Each RBM is supplied by two redundant DC power supplies. Each DC power supply is supplied by one of the two 120 Vac buses.

(2) Signal Conditioning

The RBM signal is generated by averaging a set of LPRM signals. The LPRM signals used depends on the control rod selected. Upon selection of a rod for withdrawal or insertion, the conditioned signals from the LPRMs around that rod will be automatically selected by the two RBM channels (Figure 7.7-16 shows examples of the four possible LPRM/selected rod assignment combinations).

Each RBM channel uses a BCCD level detector configuration, where C level detectors are shared. The A Level detectors are not used in the RBM signal. Each RBM selects half of the LPRM detectors surrounding the selected control rod, generates an average signal of the selected LPRM using detector levels B,C, and D signals and applies a gain adjustment to this localized average value to make it equal to 100%. The gain adjustment is applied only if the localized average value is less than 100%. The APRM Simulated Thermal Power (STP) is used to select one of three predefined setpoints.

A rod block signal is generated when the average of the selected LRPM signals reaches or exceeds the setpoint. The RBM is automatically disabled from generating rod blocks if a peripheral control rod is selected or if the STP value from the master APRM is less than approximately 28% of rated core thermal power.

In the operating range, the RBM signal is accurate to approximately 1% of full-scale.

7.7.1.11.1.2 Rod Block Trip Function

The RBM supplies a trip signal to the reactor manual control system to inhibit control rod withdrawal. The trip is initiated when RBM output exceeds the rod block setpoint.

The RBM Upscale function setpoints are automatically varied as a function of reactor thermal power. The RBM selects one of three different RBM flux trip setpoints to be applied based on the current value of thermal power. Thermal power is indicated to each RBM channel by a simulated thermal power (STP) reference signal input from an associated reference APRM channel. The setpoint range is divided into three “power ranges, a “low power range, “ an “intermediate power range,” and a “high power range.” The RBM flux trip setpoint applied within each of these three power ranges is respectively, the “low power setpoint,” the “intermediate power setpoint,” and the “high power setpoint.” The trip setpoint applicable for each power range is more restrictive than the corresponding setpoint for the lower power range(s). When STP is below the low power setpoint, the RBM flux trip outputs are automatically bypassed but the low trip setpoint continues to be applied to indicate the RBM flux setpoint on the NUMAC RBM displays. .Either RBM can inhibit control rod withdrawal (Dwgs. M1-C51-2, Sh. 1, M1-C51-2, Sh. 2, M1-C51-2, Sh. 3, M1-C51-2, Sh. 4, M1-C51-2, Sh. 5, M1-C51-2, Sh. 6, and M1-C51-2, Sh. 7). Table 7.7-3 itemizes the RBM trip functions.

7.7.1.11.1.3 Bypasses

The operator can bypass one of the two RBMs at any time (see Subsection 7.7.1.2.6.3).

7.7.1.11.1.4 Redundancy

The following features are included in RBM design:

(1) Redundant, separate, and isolated RBM channels.

(2) Redundant, separate, isolated rod selection information (including isolated contacts for each rod selection pushbutton) provided directly to each RBM channel.

(3) Separate, isolated LPRM amplifier signal information provided to each RBM channel.

(4) Independent, separate, isolated APRM reference signals to each RBM channel.

(5) Independent, isolated RBM level readouts and status displays from the RBM channels.

(6) Mechanical barrier between Channel A and Channel B of the manual bypass switch.

(7) Independent, separate, isolated rod block signals from the RBM channels to the manual control system circuitry.

7.7.1.11.1.5 Testability

The rod block monitor channels are tested and calibrated with procedures given in the applicable instruction manuals. The RBMs are functionally tested by introducing test signals into the RBM channels.

7.7.1.11.1.6 Limiting Safety System Setting Function

The three RBM power-dependent functions (Low Power Upscale, Intermediate Power Upscale, and High Power Upscale) are considered to be Limiting System Safety Settings as the RBM is credited in the accident analysis with protecting the MCPR Safety Limit for a Rod Withdrawal Error event.

As a result of the importance of the settings, and because it is assumed that this digital equipment does not drift and has no inherent uncertainties, equipment performance is monitored under surveillance for any deviation from the NTSP (Nominal Trip Set Point), either as-found or as-left.

The Analytical Limits, Allowable Values and NTSPs were determined in accordance with GE document NEDC-31336, General Electric Setpoint Methodology, September 1996.

7.7.1.11.2 Environmental Considerations

(See description for APRM, Subsection 7.6.1a.5.6.2.)

7.7.1.11.3 Operational Considerations

The Rod Block Monitor System is designed to provide information about the local core power level in the vicinity of a control rod that has been selected for withdrawal or insertion, and to provide alarm signals used to inhibit rod withdrawal if the local power level reaches a predetermined level from the rod withdrawal error analysis.

7.7.1.12 Nuclear Pressure Relief System

7.7.1.12.1 System Identification

The Nuclear Pressure Relief System, consisting of safety relief valves and associated circuitry, is designed to limit nuclear steam supply system pressure under various modes of reactor operation. The pressure relief system includes 16 pressure relief valves, each operated by a pressure relief solenoid pilot air valve. Six of these pressure relief valves have two additional pilot valves for use with the ADS function as discussed in Subsection 7.3.1.1a.1.4.1.

7.7.1.12.2 Equipment Design

The Nuclear Pressure Relief System controls and instrumentation consist of manual control/ pressure sensor channels, each dedicated to its respective safety relief valve and associated valve operator (solenoid operated air pilot valve). The pilot valve controls the pneumatic pressure applied to the air cylinder operator. Upon energizing the pilot valve, pneumatic pressure is directed from the accumulator to act on the air cylinder operator, causing the safety relief valve to open. Upon again de-energizing the pilot valve, air in the air cylinder is exhausted and the accumulator is once again isolated via the de-energized pilot valve. An accumulator, one for each valve, is

included with the control equipment to store the pneumatic energy for safety relief valve operation. Safety relief valves are automatically initiated by high reactor pressure conditions. Cables from the pressure sensors for vessel pressure are routed to a single logic cabinet in the main control room. Power to the safety relief valves' pilot valves and associated pressure sensors is provided by DC Bus A. The logic cabinet provides for appropriate separation of power supply feeders so as to limit the effects of electrical failures.

7.7.1.12.3 Initiating Circuits

Reactor pressure is detected by pressure sensors (one for each valve) which are located in the reactor building. The logic for each valve requires a single sensor trip on vessel pressure to cause safety relief valve actuation.

7.7.1.12.4 Logic and Sequencing

One initiation signal is used for each safety relief valve actuation via each respective pressure sensor output. High vessel pressure indicates the need for safety relief valve actuation to limit nuclear steam supply pressure.

Upon receipt of an initiation signal the pilot air valve is energized, thereby opening the safety relief valve. Lights in the main control room indicate when the solenoid-operated pilot valve are energized to open a safety relief valve. The safety relief valves remain open until the system pressure drops below the high pressure setpoint.

Manual system level initiation of a safety relief valve is accomplished by a control switch in either division 1 or division 2, depending on which division serving a given valve and its associated logic circuitry.

7.7.1.12.5 Bypasses and Interlocks

Bypasses and interlocks are not utilized in the safety relief valve function.

7.7.1.12.6 Redundancy and Diversity

The safety relief valve logic is initiated by high reactor pressure. Though redundancy is not provided for initiating signals to a given safety relief valve, it is provided with separate sensor signals each to different valves. Diversity is not provided.

7.7.1.12.7 Actuated Devices

Safety relief valves are actuated by four methods:

a. Automatically on high reactor pressure via pressure sensors.
b. Manually, by the operator.
c. Mechanically, through spring setpoints.
d. Automatically or manually as part of ADS (Section 7.3.1.1a.1.4).

7.7.1.12.8 Separation

Safety relief valve logic is of single channel design for each valve. Safety relief valves and associated logics are assigned to DC bus A. Cable routing, logic circuitry, manual controls and instrumentation are appropriately separated to limit the effects of a single failure.

7.7.1.12.9 Testability

Safety relief valve logic is testable up to and including the sensors and actuated equipment.

7.7.1.12.10 Environmental Considerations

The solenoid valves and their cables and the safety relief valves operators are located inside the drywell and will operate during normal and projected accident environmental conditions. The pressure sensors, which are located within the reactor building will also operate during normal and accident environments.

7.7.1.12.11 Operational Considerations

7.7.1.12.1.11.1 General Information

The instrumentation and controls of the Nuclear Pressure Relief System are required for normal plant operations to limit nuclear system pressure. When pressure relief action is required, it will be initiated automatically by the circuits described in this section.

7.7.1.12.11.2 Operator Information

A temperature element is installed on the safety relief valve discharge piping approximately three feet from the valve body. The temperature element is connected to a multipoint recorder in the control room to provide a means of detecting safety relief valve leakage during the plant operation. When the temperature in any safety relief valve discharge piping exceeds a preset value, an alarm is sounded in the control room. The alarm setting is far enough above normal (rated power) drywell ambient temperatures to avoid spurious alarms, yet low enough to give early indication of significant safety relief valve leakage.

7.7.1.13 Neutron Monitoring System - Source Range Monitor (SRM) Subsystem

7.7.1.13.1 Equipment Design

7.7.1.13.1.1 Description

The SRM provides neutron flux information during reactor startup and low flux level operations. There are four SRM channels. Each includes one detector that can be physically positioned in the core from the control room (see Figure 7.6-3).

The detectors are inserted into the core for a reactor startup. They can be withdrawn if the indicated count rate is between preset limits or if the IRM is on the third range or above (see Dwgs. M1-C51-35, Sh. 1 and M1-C51-35, Sh. 2).

(1) Power Supply

The power for the monitors is supplied from the two separate 24 VDC buses. Two monitors are powered from each bus (see Dwgs. M1-C51-35, Sh. 1 and M1-C51-35, Sh. 2).

(2) Physical Arrangement

Each detector assembly consists of a miniature fission chamber and a low-noise, quartz-fiber-insulated transmission cable. The sensitivity of the detector is 1.2×10^{-3} cps/nv nominal, 5.0×10^{-4} cps/nv minimum, and 2.5×10^{-3} cps/nv maximum. The detector cable is connected underneath the reactor vessel to the multiple-shielded coaxial cable. This shielded cable carries the pulses to a pulse current preamplifier located outside the drywell.

The detector and cable are located inside the reactor vessel in a dry tube sealed against reactor vessel pressure. A remote-controlled detector drive system moves the detector along the dry tube. Vertical positioning of the chamber is possible from above the centerline of the active length of fuel to 30 inches below the reactor fuel region (see Figure 7.6-5). When a detector arrives at a travel end point, detector motion is automatically stopped. SRM/IRM drive control arrangement and logic is presented in Figures 7.6-6 and 7.6-7. The electronics for the source range monitors, their trips, and their bypasses are located in two cabinets. Source range signal conditioning equipment is designed so that it can be used for open vessel experiments.

(3) Signal Conditioning

A current pulse preamplifier provides amplification and impedance matching for the signal conditioning electronics.

The signal conditioning equipment converts the current pulses to analog currents that correspond to the logarithm of the count rate (LCR). The equipment also derives the period. The output is displayed on front panel meters and is provided to meters and recorders in the Control Structure. The LCR meter displays the rate of occurrence of the input current pulses. The period meter displays the time in seconds for the count rate of change by a factor of 2.7. In addition, the equipment contains integral test and calibration circuits, trip circuits, power supplies, and selector circuits.

(4) Trip Functions

The trip outputs of the SRM operate in the fail-safe mode. Loss of power to the SRM causes the associated outputs to become tripped.

The SRM provides signals indicating SRM upscale, downscale, inoperative, and incorrect detector position to the reactor manual control system to block rod withdrawal under certain conditions. Any SRM channel can initiate a rod block. These rod blocking functions are discussed in Subsection 7.7.1.2.6.1. Appropriate lights and annunciators are also actuated to indicate the existence of these conditions (Table 7.7-4).

7.7.1.13.1.1.1 Bypasses and Interlocks

One of the four SRM channels can be bypassed at any one time by the operation of a switch on the Unit Operating Benchboard.

7.7.1.13.1.2 Redundancy and Diversity

SRM channels are not redundant because SRM detectors are partially dependent and do not serve as a backup to other detectors.

7.7.1.13.1.3 Testability

Each SRM channel is tested and calibrated using the procedures in SRM instruction manual. Inspection and testing are performed as required on the SRM detector drive mechanism; the mechanism can be checked for full insertion and retraction capability. The various combinations of SRM trips can be introduced to ensure the operability of the rod blocking functions.

7.7.1.13.2 Environmental Considerations

The wiring, cables, and connectors located within the drywell are designed for continuous duty in the conditions described in Section 3.11. The SRM system components are designed to operate during and after certain design basis events such as earthquakes and anticipated operational occurrences.

7.7.1.13.3 Operational Considerations

The SRM system provides information to the operator and does not require any operation other than insertion of the SRM detectors into the core whenever these channels are needed, and withdrawal of the SRM detectors, when permitted, to prevent their burnup.

7.7.1.14 Loose Parts Monitoring System

Piezoelectric accelerometers are attached externally to the Reactor Vessel and are abandoned in place.

7.7.2 ANALYSIS

This subsection:

(1) demonstrates by direction or referenced analysis that the subject described systems are not required for any plant safety function, and

(2) demonstrates by direct or referenced analysis that the plant protection systems described elsewhere are capable of coping with all failure modes of the subject control systems.

In response to item (1) above, the following is cited. Upon considering the design basis, descriptions, and evaluations presented here and elsewhere throughout the document relative to the subject system, it can be concluded that these systems do not perform any safety function.

design basis: refer to Subsection 7.1.1
description: refer to Subsection 7.7.1

The individual system analysis in this section concludes that the subject systems are not required for any plant safety action.

For consideration of item (2) above, it is necessary to refer to the safety evaluations in Chapter 15 and Appendix 15A.

In that chapter, it is first shown that the subject systems are not utilized to provide any design basis accident safety function. Safety functions, where required, are provided by other qualified systems. For expected or abnormal transient incidents following the single operation error (SOE) or single component failure (SCF) criteria, protective functions are also shown to be provided by other systems. The expected or abnormal transients cited are the limiting FMEA for the subject systems.

Next, further considerations of situations beyond the SOE and SCF, specified as single active component failure (SACF), are analyzed in Chapter 15 and Appendix 15A. Although these are not design basis requirements, the ability of the plant to provide at least one single protective function, even under these stringent assumptions, is demonstrated.

7.7.2.1 Reactor Vessel - Instrumentation

7.7.2.1.1 General Functional Requirements Conformance

The reactor vessel-instrumentation is designed to provide augmented information to the existing information required from the engineered safeguards and safety systems. The operator utilizes this information to start up, operate at power, shut down, and service the reactor system in an efficient manner. None of this instrumentation is required to initiate or control any engineered safeguard or safety system.

7.7.2.1.2 Specific Regulatory Requirements Conformance

There are no specific regulatory requirements imposed on this reactor vessel instrumentation, but the following general considerations are offered:

(1) Conformance with General Design Criteria 13

The reactor vessel information provides the operator with information on the reactor vessel operating variables during normal plant operation and anticipated operational occurrences so that the need to use the safety systems, although ready and able to respond, is minimized. This instrumentation does not serve in any direct controlling functions.

Controls that maintain the reactor vessel operating variables within prescribed operating ranges are performed by the:

(a) feedwater system
(b) RCIC system
(c) reactor manual control system or rod control and information system

(2) Conformance with General Design Criteria 24

This instrumentation is not part of or related to any safety system. The circuitry of the safety systems is completely independent of this instrumentation, such that failures of this instrumentation will not cause or prevent any action to be initiated by the safety systems.

(3) Conformance to IEEE STD 279, section 4.7

This instrumentation is separate from and independent of the safety systems circuitry. There is no direct circuit-to-circuit or functional interactions between this instrumentation and the safety systems. No single random or multiple failures in this instrumentation can prevent the safety systems from meeting the minimum performance requirements specified in the design basis of that system.

7.7.2.2 Reactor Manual Control System - Instrumentation and Controls

7.7.2.2.1 General Functional Requirements Conformance

The circuitry described for the reactor manual control system is completely independent of the circuitry controlling the scram valves. This separation of the scram and normal rod control functions prevents failures in the reactor manual control circuitry from affecting the scram circuitry. The scram circuitry is discussed in Section 7.2. Because each control rod is controlled as an individual unit, a failure that results in energizing of any of the insert or withdraw solenoid valves can affect only one control rod. The effectiveness of a reactor scram is not impaired by the malfunctioning of any one control rod. It can be concluded that no single failure in the reactor manual control system can result in the prevention of a reactor scram and that repair, adjustment, or maintenance of reactor manual control system components does not affect the scram circuitry.

Chapter 15 and Appendix 15A examine the various failure mode considerations for this system. The expected and abnormal transients and accident events analyzed envelope the FMEA associated with this system's components. These include:

(1) control rod withdrawal errors
(2) control rod drop accident.

To be very specific, the following is cited:

(1) The RMCS is not required for plant safety functions. The system has no function associated with any design basis accident.
(2) This system is not used for plant shutdown resulting from an accident or nonstandard operational conditions.
(3) The function of the RMCS is to control core reactivity and thus power level. Interlocks from many different sources are incorporated to prevent the spurious operation of drives or undesirable rod patterns throughout all ranges of operation.
(4) This system contains no components, circuits, or instruments required for reactor trip or scram. There are no operator manual controls which can prevent scram.
(5) The consequence of improper operator action or the failure of rod block interlocks results in a reactor scram.
(6) The requirements for the portions of RMCS that interface with any safety system function includes tolerance to single failures and component quality.

7.7.2.2.2 Specific Regulatory Requirements

There are no specific requirements imposed on this system, but the following general considerations are offered:

(1) 10CFR50 Appendix A - Criterion 24

No part of the RMCS is required for scram. The rod block functions provided by the NMS are the only instances where the RMCS uses any instruments or devices related to RPS functions. The rod block signals received from the NMS prevent improper rod motion before limits causing reactor scram are reached. Common APRM, IRM, and SRM detectors are used, but the signal is physically and electrically isolated before its use in the reactor manual control system. See Subsection 7.7.1.2.6.2 for a description of this interface. Single failure of a control component therefore will not degrade the protection system.

(2) 10CFR50 Appendix A - Criterion 26

The RMCS is one of the two independent reactivity control systems as required by this criterion.

7.7.2.2.3 Rod Block Trip - Instrumentation and Controls

7.7.2.2.3.1 General Functional Requirements Conformance

The rod withdrawal block functions prevent an operator from carrying out actions which, if unchecked, might result in a protective system action (scram). A fixed margin separates the rod withdrawal block setpoints and the scram setpoints in IRM and APRM. There are no safety considerations.

7.7.2.2.3.2 Specific Regulatory Requirement Conformance

No specific regulatory requirements apply. The circuits are designed to be normally energized (fail-safe on loss of power) and single-failure tolerant. The equipment is designed to prevent the rod

block trip circuitry from affecting the protection system trips in the IRM and APRM channels through use of separate trip circuits and relays. IEEE Standards do not apply because rod block trips are not required for any postulated design basis accident or for safe shutdown.

7.7.2.2.4 Not Used

7.7.2.2.5 Rod Worth Minimizer (RWM) - Instrumentation and Controls

7.7.2.2.5.1 General Functional Requirements Conformance

No general functional requirements are cited for this system.

7.7.2.2.5.2 Specific Regulatory Requirements Conformance

The Rod Worth Minimizer program in the process computer has no specific regulatory or IEEE requirement.

7.7.2.3 Recirculation Flow Control System – Instrumentation and Controls

7.7.2.3.1 General Functional Requirements Conformance

The recirculation flow control system is designed so that coupling is maintained between an M-G set drive motor and its generator, even if the AC power or a speed controller signal fails. This assures that the drive motor inertia will contribute to the power supplied to the recirculation pump during coastdown of the M-G set after loss of AC power, and that the generator continues to be driven if the speed controller signal is lost.

Transient analyses described in Chapter 15 show that no malfunction in the recirculation flow control system can cause a transient sufficient to damage the fuel barrier or exceed the nuclear system pressure limits, as required by the safety design basis.

The safety design basis of the recirculation flow control loop is that no single component failure shall result in a violation of the plant transient MCPR limit.

The recirculation flow control system is not required to be designed to meet the single-failure criterion. Control system failures resulting in complete loss of control signal will result in electrical "locking" of the scoop tube in its last demanded position at the instant of signal loss. This locking feature is provided both by the ICS diagnostics initiating an output contact state change (e.g. external scoop tube lock input to positioner), and by the Jordan scoop tube positioner internal circuitry detecting an input signal loss.

In the case of recirculation control system failures (e.g., transistors, resistors, etc.) causing upscale signal failure, the reactor is protected by high pressure or high flux scram. Such faults have been analyzed in Chapter 15 and include both M-G sets going to full speed simultaneously.

Recirculation system flow control failures causing downscale signal failures may cause one or both recirculation M-G sets to go to minimum speed. M-G set speed reduction is limited to not more than 40% per second. Speed reduction of both M-G sets might result from failure of the reactor recirculation pump speed control.

The Integrated Control System maintains the electrical locking of the scoop tube to its last known demanded position upon loss of, or invalidation of the digital control scheme. The A and B speed control instrumentation systems are independent with redundant power sources. Additionally, the Operators ability to manually lock the scoop tube is unchanged. System operating capabilities are provided in the unlikely event a complete loss of a Control Processing pair or individual I/O module is experienced. A watchdog timer circuit monitors the operation of each Control Processing pair and will initiate a Scoop Tube Lock signal if both processors fail. Diagnostics monitoring communication of the I/O modules (FBM's) with the control processor as well as ICS monitoring of operating parameters and digital control logic will detect individual I/O module mis-operation and/or failure, resulting in the associated module failing to a pre-determined state supporting continued plant operation.

Recirculation M-G set speed limiters are provided to prevent recirculation pump, valve, and jet pumps from operating in regions that would cause cavitation damage to these components.

Each recirculation pump valve is independent of the other, and has its own Unit Operating Benchboard mounted control switch for manual operation. Each valve has open/close travel limit switches and Unit Operating Benchboard pilot lamp indication.
Chapter 15 and Appendix 15A examine the various failure mode considerations for this system. The expected and abnormal transients and accident events analyzed envelope the FMEA associated with this system's components. These include:

(1) Recirculation flow controller failures
(2) Recirculation pump seizure and pump shaft failure

7.7.2.3.2 Specific Regulatory Requirements

There are no specific regulatory requirements imposed on this system.

7.7.2.4 Feedwater Control System (Turbine-Driven Pumps) – Instrumentation and Controls

7.7.2.4.1 General Functional Requirements Conformance

The feedwater control system is a power generation system for purposes of maintaining proper vessel water level. For feedwater level demand, interlocks are provided within the digital Integrated Control System to lock the flow changing capabilities to the last known good value upon reactor vessel feedwater level control system failure. This demand control signal will maintain the reactor feedpump turbine at the last known speed. The Integrated Control System will not initiate a RFPT trip on reactor vessel feedwater level control system failure. Should the vessel level rise too high, the feedwater pumps and plant main turbine would be tripped. This is an equipment protective action which would result in reactor shutdown by the RPS system as outlined in Section 7.2. Lowering of the vessel level would also result in action of the RPS to shutdown the reactor.

Chapter 15 and Appendix 15A examine the various failure mode considerations for this system relative to plant safety and operational effects. The expected and abnormal transients and accident events analyzed in the appendix envelope the FMEA associated with this system's components. These include:

(1) Loss of all feedwater flow (pumps)
(2) Loss of feedwater heater
(3) Malfunction of feedwater controller
(4) Failure of feedwater line

7.7.2.4.2 Specific Regulatory Requirements Conformance

The feedwater system is not a safety-related system and is not required for safe shutdown of the plant, nor is it required during or after accident conditions.

There are no interconnections with safety-related systems and no specific regulatory requirements are imposed on the system.

7.7.2.5 Pressure Regulatory and Turbine-Generator System Instrumentation and Controls

7.7.2.5.1 General Functional Requirements Conformance

Turbine speed and acceleration control is provided by the initial pressure regulator, which controls steam throttle valve position to maintain constant reactor pressure. The turbine speed governor overrides the pressure regulator on increase of turbine speed or loss of generator load. Excess steam is automatically bypassed directly to the main condenser by the pressure controlled bypass valves.

Provision is made for matching nuclear steam supply to turbine steam requirements. As pressure is lowered by a greater load demand, the pressure regulator sends a proportional signal to the recirculation flow control system, which causes an appropriate increase in recirculation flow. Detailed description of conformance to these design bases is contained in Subsection 7.7.1.

Chapter 15 and Appendix 15A examine the various failure mode considerations for this system relative to plant safety and operational effects. The expected and abnormal transient and accident events analyzed in this appendix envelope the FMEA associated with this system's components. These include:

(1) Failure of pressure regulator
(2) Turbine/generator trips
(3) Main condenser failures
(4) Breaks outside containment

7.7.2.5.2 Specific Regulatory Requirements Conformance

No specific regulatory requirements are imposed on the subject system.

The turbine-generator control system is not a safety-related system. Protection systems which are provided as an integral part of the turbine-generator equipment override the turbine-generator control system. In the event of a turbine-generator trip due to a protective action, the control valve

fast closure and the stop valve closure inputs to the RPS initiate reactor scram (see Subsections 7.2.1.1.4.2(d) and 7.2.1.1.4.2(e)).

Pressure regulator malfunction which leads to low turbine inlet pressure is detected by pressure switches provided in the main steam isolation system, which in turn initiated closure of the main steamline isolation valves (see Subsection 7.3.1.1a.2.4.1.5). Similarly, high turbine inlet pressure leads to detection of high reactor pressure by the RPS, which initiates the reactor scram (see Subsection 7.3.1.1a.2.4.1.4).

Control malfunction which results in high flow through the turbine control valves and the bypass valves is detected by main steam flow switches provided in the main steam isolation system, which initiates closure of the main steam level isolation valves (see Subsection 7.3.1.1a.3) and a subsequent reactor scram (see Subsection 7.2.1.1.4.2(f)).

Interfaces between the subject non-safety systems and their components with safety-related systems (RPS, containment isolation control system, etc.) are designed in such a manner that failure of the non-safety components will not negate the necessary safety system functions.

7.7.2.6 Neutron Monitoring System Traversing In-Core Probe Subsystem (TIP) - Instrumentation and Controls

7.7.2.6.1 General Functional Requirement Conformance

An adequate number of TIP machines is supplied to assure that each LPRM assembly can be proved by a TIP and that one LPRM assembly (the central one) can be proved by every TIP to allow intercalibration. Typical TIPs have been tested to prove linearity (Reference 7.7-1). The system has been field-tested in an operating reactor to assure reproducibility for repetitive measurements. The mechanical equipment has undergone life testing under simulated operating conditions to assure that all specifications can be met. The system design allows semi-automatic operation for LPRM calibration and process computer use. The TIP machines can be operated manually to allow pointwise flux mapping.

7.7.2.6.2 Specific Regulatory Requirement Conformance

There are no specific regulatory requirements for the TIP subsystem.

7.7.2.7 Plant Computer System - Instrumentation

7.7.2.7.1 General Functional Requirements

The Plant Computer System is designed to provide the operator with certain categories of information as defined in the equipment description (Subsection 7.7.1.7) and to supplement procedural requirements for control rod manipulation during reactor startup and shutdown. The system augments existing information from other systems such that the operator can start up, operate at power, and shutdown in an efficiency manner. This system is not required to initiate or control any engineered safeguard or safety-related system.

7.7.2.7.2 Specific Regulatory Requirements Conformance

The plant computer has no specific regulatory requirements.

7.7.2.8 Reactor Water Cleanup System - Instrumentation and Controls

7.7.2.8.1 General Functional Requirement Conformance

The RWCU system is not a safety-related system. Therefore, the instrumentation supplied is for the plant equipment protection and for operator information only.

The cleanup system is protected against overpressurization by relief valves. The ion exchange resin is protected from high temperature by temperature switches upstream of the filter demineralizer unit. One switch activates an alarm while a second switch closes the isolation valve, which subsequently trips the cleanup pumps. The isolation valves will also close automatically and trip the pumps on a reactor low water level signal. Actuation of the standby liquid control system causes closure of the outboard isolation valve only. The pumps will also trip on high pump cooling water temperature or low discharge flow.
A high differential pressure across the filter-demineralizer or its discharge strainer will automatically close the unit's outlet valve after sounding an alarm. The holding pump starts whenever there is low flow through a filter-demineralizer. The precoat pump operation is unaffected by the precoat tank level.

Sampling stations are provided to obtain reactor water samples from the entrance and exit of both filter-demineralizers.

The system flow, pressure, temperature, and conductivity are recorded or indicated on a panel in the main control room. Instrumentation and control for backwashing and precoating the filter-demineralizers are on a local panel outside the drywell. Alarms are sounded in the main control room to alert the operator to abnormal conditions.

7.7.2.8.2 Specific Regulatory Requirements Conformance

The subject system has no specific regulatory requirements imposed on it, but the following observation is included:

(1) Regulatory Guide 1.56 (6/73)

The Reactor Water Cleanup (RWCU) system provides the recorded conductivity measurements and alarms of influents and effluents of the demineralizers and records of the flow rate through each demineralizer as recommended in the guide.

7.7.2.9 Transient Monitoring System Analysis

7.7.2.9.1 TMS Safety-Related Functions

The TMS itself performs no safety function. However, TMS devices are connected in safety-related circuits and must maintain the safety-related circuit integrity, without disturbance to that circuit, under all conditions.

Where TMS signals are required from safety-related circuits, isolation is provided between the safety circuit and the TMS signal by the use of a Validyne Engineering Corp. Remote Carrier Modulator, Model CM249.

7.7.2.9.1.1 TMS Safety-Related System Isolation

The Validyne CM249 provides impedance isolation, using transformer coupling, between safety-related circuits and TMS circuits. CM249 circuit arrangement provides isolation in compliance with IEEE 279-1971, Section 4.7.2. The CM249 unit has been seismically and environmentally qualified. See Wyle Labs Report (NDQ 783015 Rev. B).

A summary of the Validyne CM249 specifications is as follows:

Common Mode Isolation Voltage - 2000 V Peak
Input/Output Dielectric Strength - 2000 VDC, 220 VAC
Insulation Resistance - 10^{10} ohms
Input Impedance - 2 megohms

7.7.2.9.1.2 TMS Wiring Separation

All wiring for the TMS is installed permanently except wiring for piping thermal expansion and vibration measurements installed locally from a measuring device to a multiplexer. This thermal expansion and vibration wiring is not safety-related and will be removed after completion of testing. Wiring from the multiplexers to the TMP will be installed in a raceway system as any non-safety-related cable. Wiring for circuits from safety-related signals up to the isolation device shall be separated as though they were safety-related. Permanent wiring for the TMS from safety and non-safety systems to the TMP will be as follows:

A. Wiring required by transient test instrumentation within GE supplied panels is routed to the requirements of A61-4050 Electrical Equipment Separation for Safeguards System.

B. Cables required by transient test instrumentation is routed through the GE supplied PGCC panel modules in accordance with the requirements of NEDO 10466.

C. Safety-related wiring and cables required for transient test instrumentation is run in compliance with criteria set forth in Subsection 3.12 of this FSAR.

7.7.2.10 Refueling Interlocks System - Instrumentation and Controls

7.7.2.10.1 General Functional Requirements Conformance

The refueling interlocks, in combination with core nuclear design and refueling procedures, limit the probability of an inadvertent criticality. The nuclear characteristics of the core assure that the reactor is subcritical with all rods except one full in and the highest worth control rod fully withdrawn. Refueling procedures are written to avoid situations in which inadvertent criticality is possible. The combination of refueling interlocks for control rods and the refueling platform provides redundant methods of preventing inadvertent criticality even after procedural violations. The interlocks on hoists provide yet another method of avoiding inadvertent criticality.

Table 7.7-2 illustrates the effectiveness of the refueling interlocks. This table considers various operational situations involving rod movement, hoist load conditions, refueling platform movement and position, and mode switch manipulation. The initial conditions in Situations 4 and 5 appear to contradict the action of refueling interlocks, because the initial conditions indicate that more than

one control rod is withdrawn, yet the mode switch is in REFUEL. Such initial conditions are possible if more than one control rod is withdrawn, yet the mode switch is in REFUEL. Such initial conditions are possible if the rods are withdrawn when the mode switch is in STARTUP, and then the mode switch is turned to REFUEL. In all cases, correct operation of the refueling interlock will prevent either the operation of loaded refueling equipment over the core when any control rod is withdrawn, or the withdrawal of any control rod when fuel-loaded refueling equipment is operating over the core. In addition, when the mode switch is in REFUEL, only one rod can be withdrawn; selection of a second rod initiates a rod block.

7.7.2.10.2 Specific Regulatory Requirements Conformance

No specific regulatory requirements apply to refueling interlocks. The refueling interlocks are designed to be normally energized (fail safe) and single failure tolerant of equipment failures. IEEE standards do not apply because the refueling interlocks are not required for any postulated design basis accident or for safe shutdown. The interlocks are required only for the refueling mode of plant operation.

The requirements of 10 CFR 50 Appendix B are met in the manner set forth in Chapter 17.

There are no specific General Design Criteria requirements for this system.

7.7.2.11 Rod Block Monitor Subsystem

7.7.2.11.1 General Functional Requirement Conformance

Motion of a control rod causes the LPRMs adjacent to the control rod to respond to the change in power in the region of the rod in motion. Figure 7.7-19 illustrates the calculated response of the two RBMs to the full withdrawal of a selected control rod from a region in which the design limits on power and flow exist.

Because MCPR cannot reach 1.0 until the control rod is withdrawn through greater than half its stroke, the highest rod block setpoint halts rod motion well before local fuel damage can occur. This is true even with the adjacent and nearest LPRM detector assemblies failed.

7.7.2.11.2 Specific Regulatory Requirement Conformance

The rod block monitor subsystem is not a protection system and protection criteria in IEEE standards and regulatory guides do not apply.

10CFR50 Appendix A

Criterion 24

The RBM provides an interlocking function in the control rod withdrawal portion of the CRD reactor manual control system. This design is separated from the protective functions in the plant to assure their independence.

The RBM is designed to prevent inadvertent control rod withdrawal given an imposed single failure within the RBM. One of the two RBM channels is sufficient to provide an appropriate control rod withdrawal block.

In addition, the RBM has been designed to meet "appropriate protection system criteria…acceptable to the Regulatory Staff" (Reference 7.7-2).

7.7.2.12 Nuclear Pressure Relief System – Instrumentation and Controls

7.7.2.12.1 General Functional Requirements Conformance

The Nuclear Pressure Relief system is designed to provide the nuclear steam supply pressure relief function without jeopardy to the safety-related ADS function, discussed in Section 7.3.

7.7.2.12.2 Specific Regulatory Requirements

(1) 10CFR50 - Appendix A - Criterion 14.

The Nuclear Pressure Relief System provides additional means for minimizing the probability of abnormal reactor coolant pressure boundary leakage.

(2) 10CFR50 - Appendix A - Criterion 15.

The Nuclear Pressure Relief System is designed to afford adequate additional margin to assure that the design conditions of the reactor coolant pressure boundary are not exceeded during any condition of normal operation, including anticipated operational occurrences.

(3) 10CFR Appendix A - Criterion 30.

The components of the Nuclear Pressure Relief System are designed, selected, fabricated, erected, and tested to the highest, practical, current industrial standards. The System is designed with temperature sensors for each safety relief valve whereby leaks may be detected and identified in a timely fashion.

7.7.2.13 Neutron Monitoring System - Instrumentation and Controls

7.7.2.13.1 Source Range Monitor Subsystem

7.7.2.13.1.1 General Functional Requirement Conformance

The arrangement of the SRM Detectors in the reactor is shown in Figure 7.6-3. This arrangement produces at least three counts per second in the SRM, using the sensitivity noted in Subsection 7.7.1.13 and the design source strength at initial reactor startup. If the discriminator setting is adjusted to produce the specified sensitivity, the signal-to-noise count ratio is well above the 2:1 design basis for cold startup.

Normal startup procedures ensure that withdrawal of control rods is distributed about the core to prevent excessive multiplication in any one section of the core.

Hence, each SRM chamber can respond in some degree during the initial rod withdrawal. During startup withdrawal, one of the four control rods adjacent to each SRM chamber and one control rod adjacent to each neutron source is withdrawn before the reactor is critical. This procedure reduces

source and detector shadowing and assures increases in the detector signals as the core average neutron multiplication increases.

The design sensitivity of the SRM detectors and their nominal operating ranges results in a design overlap of the SRM and IRM with both fully inserted (Figure 7.6-13); however, individual sensor sensitivity or unit characteristics may reduce or eliminate this overlap. The reduction or elimination of the overlap does not affect the IRM system safety-related functions nor preclude the operator from monitoring reactor period with the SRMs.

7.7.2.13.1.2 Specific Regulatory Requirements Conformance

There are no specific regulatory or IEEE requirements for the Source Range Monitor Subsystem.

7.7.3 REFERENCES

7.7-1 Morgan, W. R., "In Core Neutron Monitoring System for General Electric Boiling Water Reactors," APED-5706, November, 1968 (Rev. April, 1969).

7.7-2 Hatch 1 Amendment 7, June 24, 1969, pp. 7-3.0-1 and 7-5.0-1.

TABLE 7.7-1

CRD HYDRAULIC SYSTEM PROCESS INDICATORS

Measured Variable	Instrument Type
Total system flow	Flow indicator
Drive water pump suction pressure	Annunciator
Drive water filter differential pressure	Annunciator
Cooling water header pressure	Pressure indicator
Charging water header pressure	Annunciator
Drive water flow rate	Flow indicator
Cooling water header flow	Flow indicator
Control rod drive temp	Annunciator
Control rod position (normal range)	Rod status display

TABLE 7.7-2
REFUELING INTERLOCK EFFECTIVENESS
(See Note)

SITUATION	REFUELING PLATFORM POSITION	REFUELING TMH*	PLATFORM FMH*	HOISTS FG*	SERVICE PLATFORM HOIST	CONTROLRODS	MODE SWITCH	ATTEMPT	RESULT
1	Not near core	UL*	UL*	UL*	UL*	All rods in	Refuel	Move refueling platform over core	No restrictions
2	Not near core	UL	UL	UL	UL	All rods in	Refuel	Withdraw rods	Cannot withdraw more than one rod
3	Not near core	UL	UL	UL	UL	One rod withdrawn	Refuel	Move refueling platform over core	No restrictions
4	Not near core	Any hoist loaded			UL	One rod withdrawn	Refuel	Move refueling platform over core	Platform stopped before over core
5	Not near core	UL	UL	UL	UL	More than one rod withdrawn	Refuel	Move refueling platform over core	Platform stopped before over core
6	Over core	UL	UL	UL	UL	All rods in	Refuel	Withdraw rods	Cannot withdraw more than one rod
7	Over core	Any hoist loaded				All rods in	Refuel	Withdraw rods	Rod block
8	Not near core	UL	UL	UL	L*	All rods in	Refuel	Withdraw rods	Rod block
9.	Not near core	UL	UL	UL	L	All rods in	Refuel	Operate service platform hoist	No restrictions
10.	Not near core	UL	UL	UL	L	One rod withdrawn	Refuel	Operate service platform hoist	Hoist operation prevented
11	Not near core	UL	UL	UL	UL	All rods in	Startup	Move refueling platform over core	Platform stopped before over core
12	Not near core	UL	UL	UL	L	All rods in	Startup	Operate service platform hoist	No restrictions
13	Not near core	UL	UL	UL	L	One rod withdrawn	Startup	Operate service platform hoist	Hoist operation prevented
14	Not near core	UL	UL	UL	L	All rods in	Startup	Withdraw rods	Rod block
15	Not near core	UL	UL	UL	UL	All rods in	Startup	Withdraw rods	No restrictions
16.	Over core	UL	UL	UL	UL	All rods in	Startup	Withdraw rods	Rod block
17	Any		Any condition		Any condition	Any condition, reactor not at power	Startup	Turn mode switch to RUN	Rod block

*LEGEND
TMH – Trolley Mounted Hoist FMH – Frame Mounted Hoist FG – Fuel Grapple UL – Unloaded L – Fuel Loaded

NOTE: The Service Platform is not used and has been eliminated. The bypass plug for the Service Platform hoist loaded interlock is installed which allows control rod withdrawal with the mode switch in REFUEL or STARTUP.

TABLE 7.7-3

RBM SYSTEM TRIPS

	UNIT 1 & 2	
TRIP FUNCTION	NOMINAL SETPOINT	TRIP ACTION
Trip Setpoints and Power Setpoints	See Technical Requirements Manual	Rod Block, Annunciator Amber Light Display, RBM ODA
RBM Inoperative	(See Note)	Rod Block, Annunciator Amber Light Display, RBM ODA
RBM Downscale	5/125 PS	Rod Block, Annunciator White Light Display, RBM ODA
RBM Bypassed	Manual Switch or Peripheral Rod Selected or APRM Reference Below 30%	White Light Display, RBM ODA

Note:

RBM is inoperative, if module interlock chain is broken, OPERATE-CALIBRATE switch is not in OPERATE position, less than 50% of available LPRM signals are above 3% threshold, internal logic self-test circuits indicate trouble or no rod selected or more than one rod selected.

TABLE 7.7-4

IRM TRIPS*

Trip Function	Trip Action
IRM Upscale (high-high)	Scram, annunciator, red light display
or IRM inoperative	Scram, annunciator, red light display
IRM upscale (high)	Rod block, annunciator, amber light display
IRM downscale	Rod block (exception on most sensitive scale), annunciator, white light display
IRM bypassed	White light display

Note: IRM is inoperative if module interlock chain is broken, operated-calibrate switch is not in operate position, or detector polarizing voltage is below 80 V.

* See the Technical Specification and Technical Requirements Manual for set points.

Security-Related Information
Figure Withheld Under 10 CFR 2.390

SUSQUEHANNA STEAM ELECTRIC STATION UNITS 1 & 2 FINAL SAFETY ANALYSIS REPORT
WATER LEVEL RANGE DETECTION FIGURE 7.7-1

Security-Related Information
Figure Withheld Under 10 CFR 2.390

SUSQUEHANNA STEAM ELECTRIC STATION UNITS 1 & 2 FINAL SAFETY ANALYSIS REPORT
CONTROL ROD DRIVE HYDRAULIC SYSTEM LOGIC DIAGRAM FIGURE 7.7-2-1

Security-Related Information
Figure Withheld Under 10 CFR 2.390

SUSQUEHANNA STEAM ELECTRIC STATION UNITS 1 & 2 FINAL SAFETY ANALYSIS REPORT
CONTROL ROD DRIVE HYDRAULIC SYSTEM LOGIC DIAGRAM FIGURE 7.7-2-2

Security-Related Information
Figure Withheld Under 10 CFR 2.390

SUSQUEHANNA STEAM ELECTRIC STATION UNITS 1 & 2 FINAL SAFETY ANALYSIS REPORT
CONTROL ROD DRIVE HYDRAULIC SYSTEM LOGIC DIAGRAM FIGURE 7.7-2-3

Security-Related Information
Figure Withheld Under 10 CFR 2.390

SUSQUEHANNA STEAM ELECTRIC STATION UNITS 1 & 2 FINAL SAFETY ANALYSIS REPORT
CONTROL ROD DRIVE HYDRAULIC SYSTEM LOGIC DIAGRAM FIGURE 7.7-2-4

Security-Related Information
Figure Withheld Under 10 CFR 2.390

SUSQUEHANNA STEAM ELECTRIC STATION UNITS 1 & 2 FINAL SAFETY ANALYSIS REPORT
CONTROL ROD DRIVE HYDRAULIC SYSTEM LOGIC DIAGRAM FIGURE 7.7-2-5

Security-Related Information
Figure Withheld Under 10 CFR 2.390

SUSQUEHANNA STEAM ELECTRIC STATION UNITS 1 & 2 FINAL SAFETY ANALYSIS REPORT
CONTROL ROD DRIVE HYDRAULIC SYSTEM LOGIC DIAGRAM FIGURE 7.7-2-6

Security-Related Information
Figure Withheld Under 10 CFR 2.390

SUSQUEHANNA STEAM ELECTRIC STATION UNITS 1 & 2 FINAL SAFETY ANALYSIS REPORT
CONTROL ROD DRIVE HYDRAULIC SYSTEM LOGIC DIAGRAM FIGURE 7.7-2-7

FIGURE 7.7-3-1 REPLACED BY DWG. M1-C12-90, SH. 4

FIGURE 7.7-3-2 REPLACED BY DWG. M1-C12-110, SH. 8

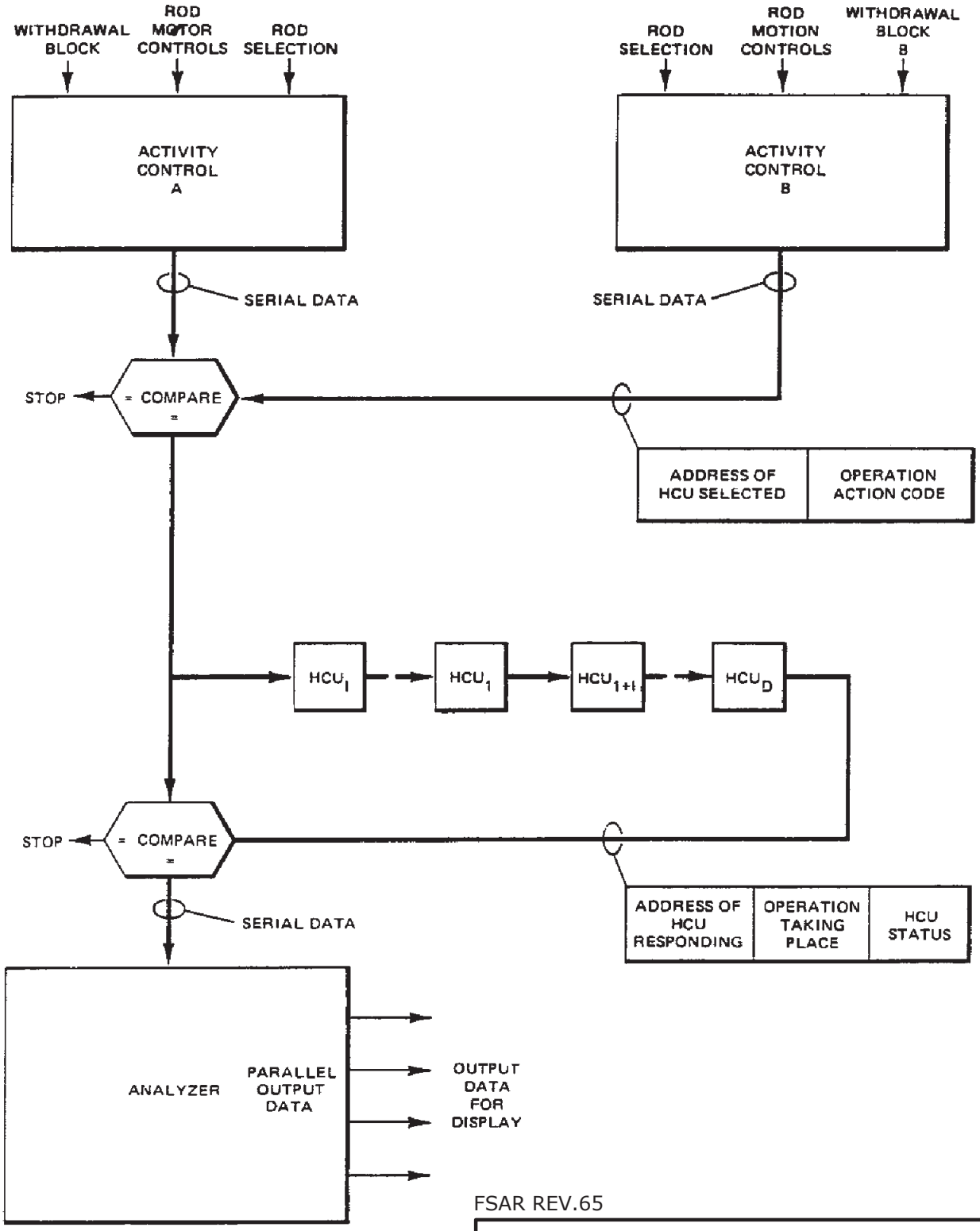

FSAR REV.65

SUSQUEHANNA STEAM ELECTRIC STATION
UNITS 1 & 2
FINAL SAFETY ANALYSIS REPORT

REACTOR MANUAL CONTROL
SYSTEM OPERATION

FIGURE 7.7-4, Rev 49

AutoCAD: Figure Fsar 7_7_4.dwg

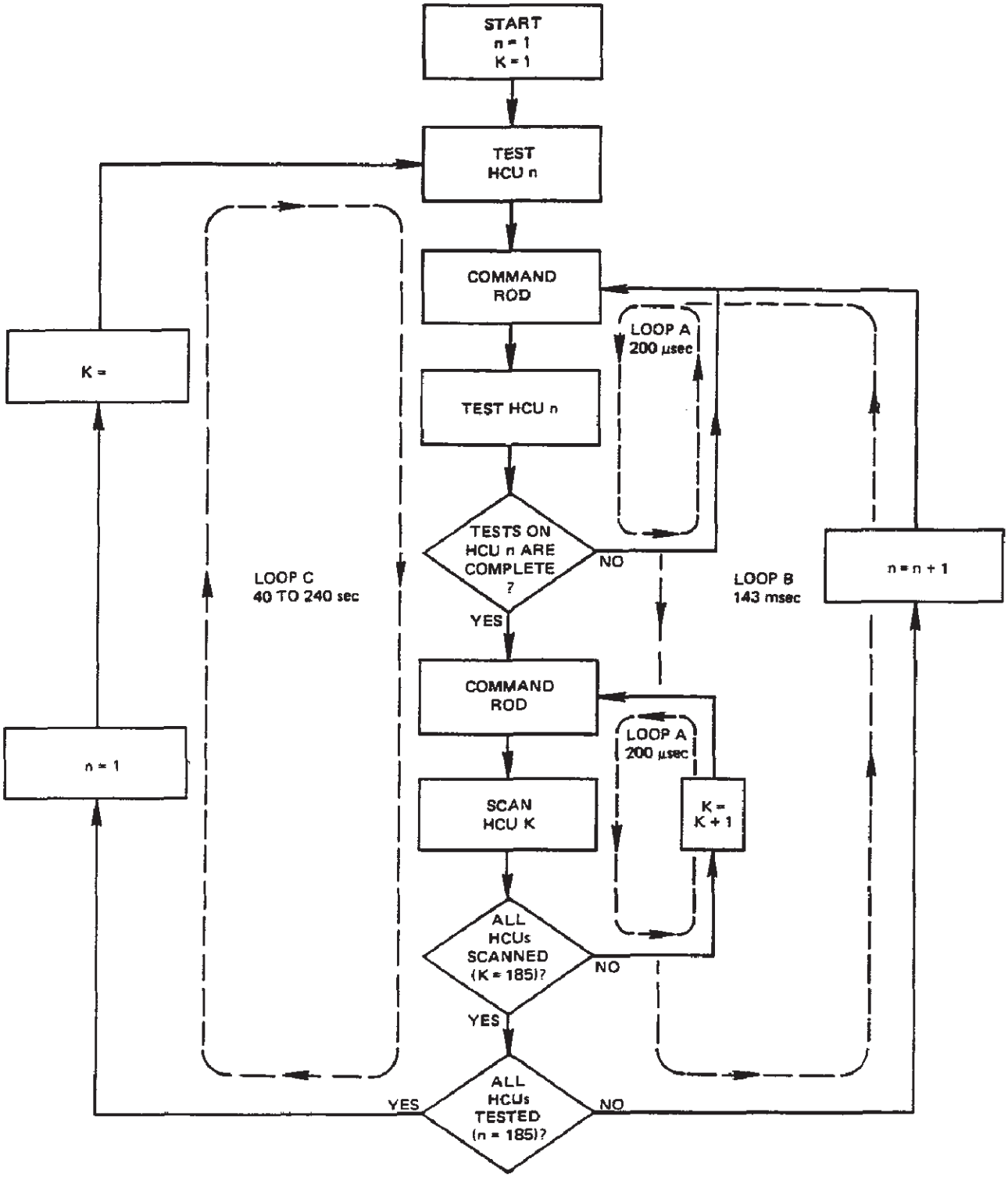

FSAR REV.65

SUSQUEHANNA STEAM ELECTRIC STATION
UNITS 1 & 2
FINAL SAFETY ANALYSIS REPORT

REACTOR MANUAL CONTROL
SELF-TEST PROVISIONS

FIGURE 7.7-5, Rev 49

AutoCAD: Figure Fsar 7_7_5.dwg

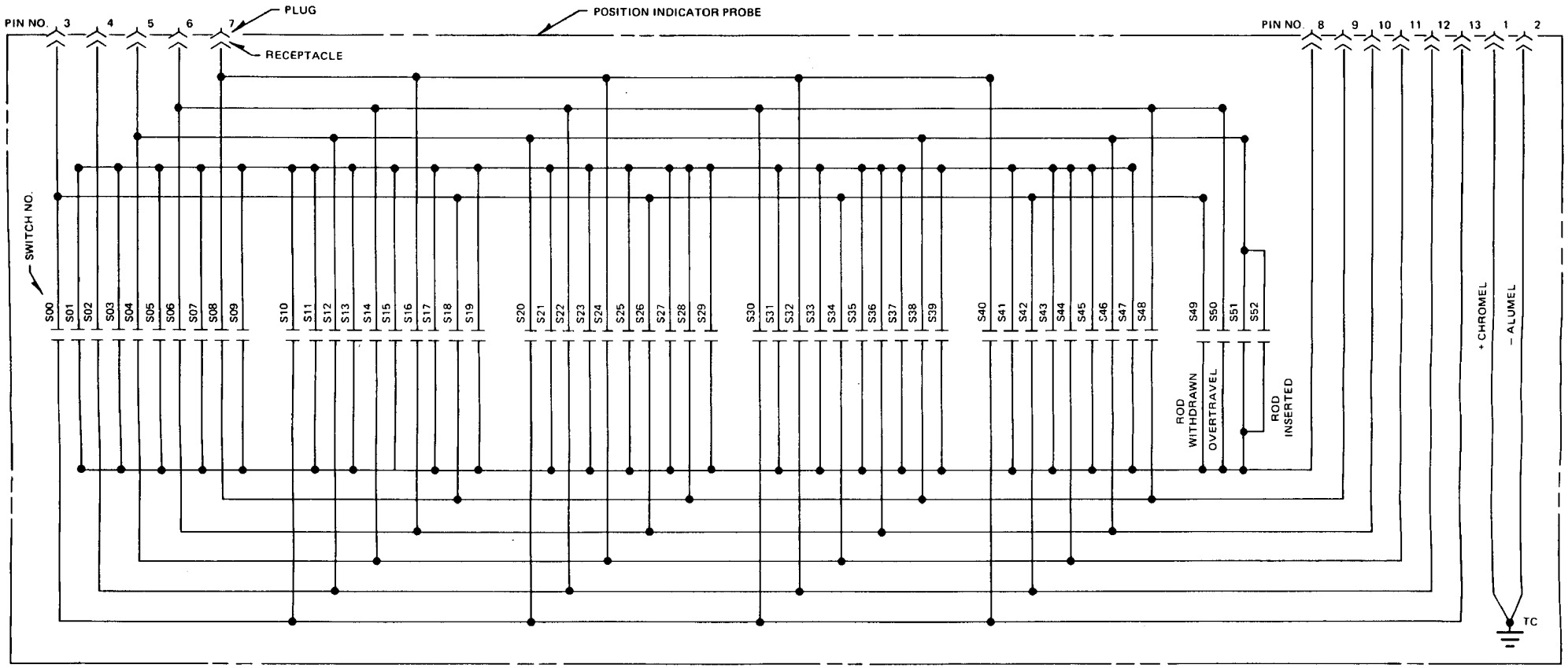

FSAR REV.65

SUSQUEHANNA STEAM ELECTRIC STATION
UNITS 1 & 2
FINAL SAFETY ANALYSIS REPORT

ELEVEN-WIRE
POSITION PROBE

FIGURE 7.7-6, Rev 49

AutoCAD: Figure Fsar 7_7_6.dwg

FIGURE 7.7-7-1 REPLACED BY DWG. M1-B31-189, SH. 1

FIGURE 7.7-7-2 REPLACED BY DWG. M1-B31-189, SH. 2

FIGURE 7.7-7-3 REPLACED BY DWG. M1-B31-189, SH. 3

FIGURE 7.7-7-4 REPLACED BY DWG. M1-B31-189, SH. 4

FIGURE 7.7-7-5 REPLACED BY DWG. M1-B31-189, SH. 5

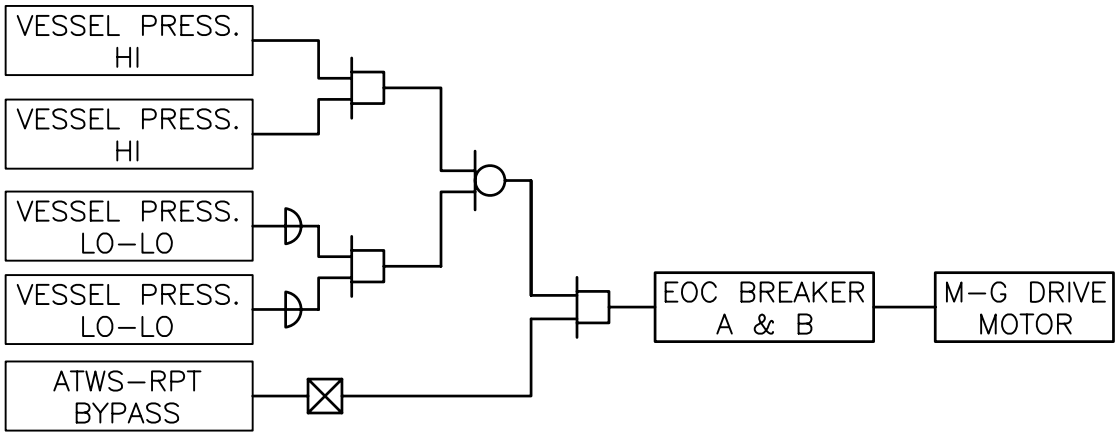

TYPICAL OF DIVISION 1 & DIVISION 2

M–G SET & PUMP MOTOR SCHEMATIC

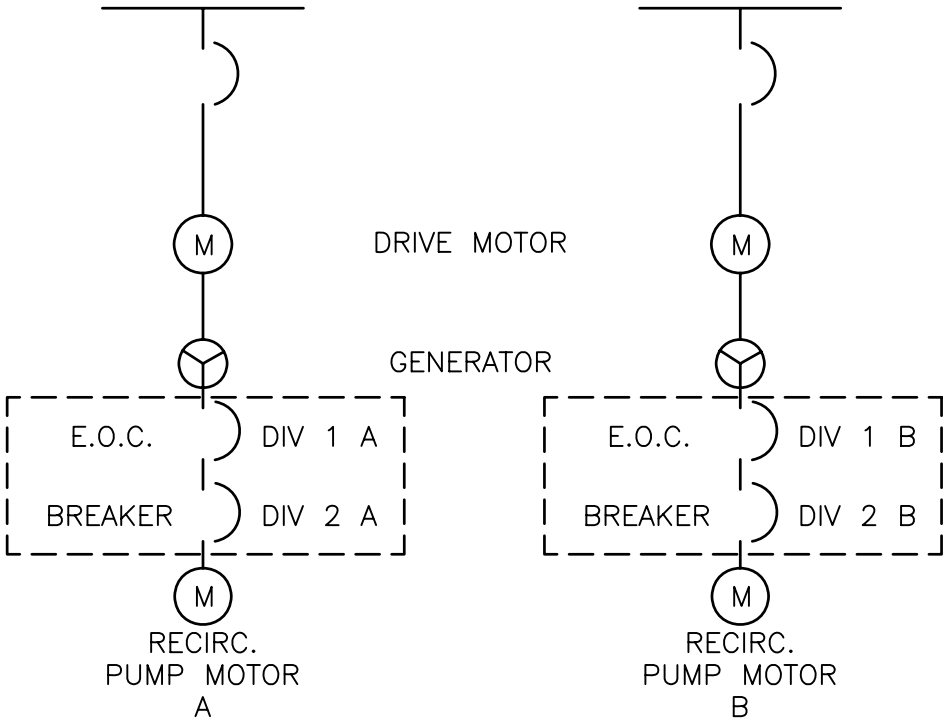

FSAR REV.65

SUSQUEHANNA STEAM ELECTRIC STATION
UNITS 1 & 2
FINAL SAFETY ANALYSIS REPORT

ATWS RECIRCULATION PUMP TRIP LOGIC

FIGURE 7.7-7-6, Rev 48

AutoCAD: Figure Fsar 7_7_7_6.dwg

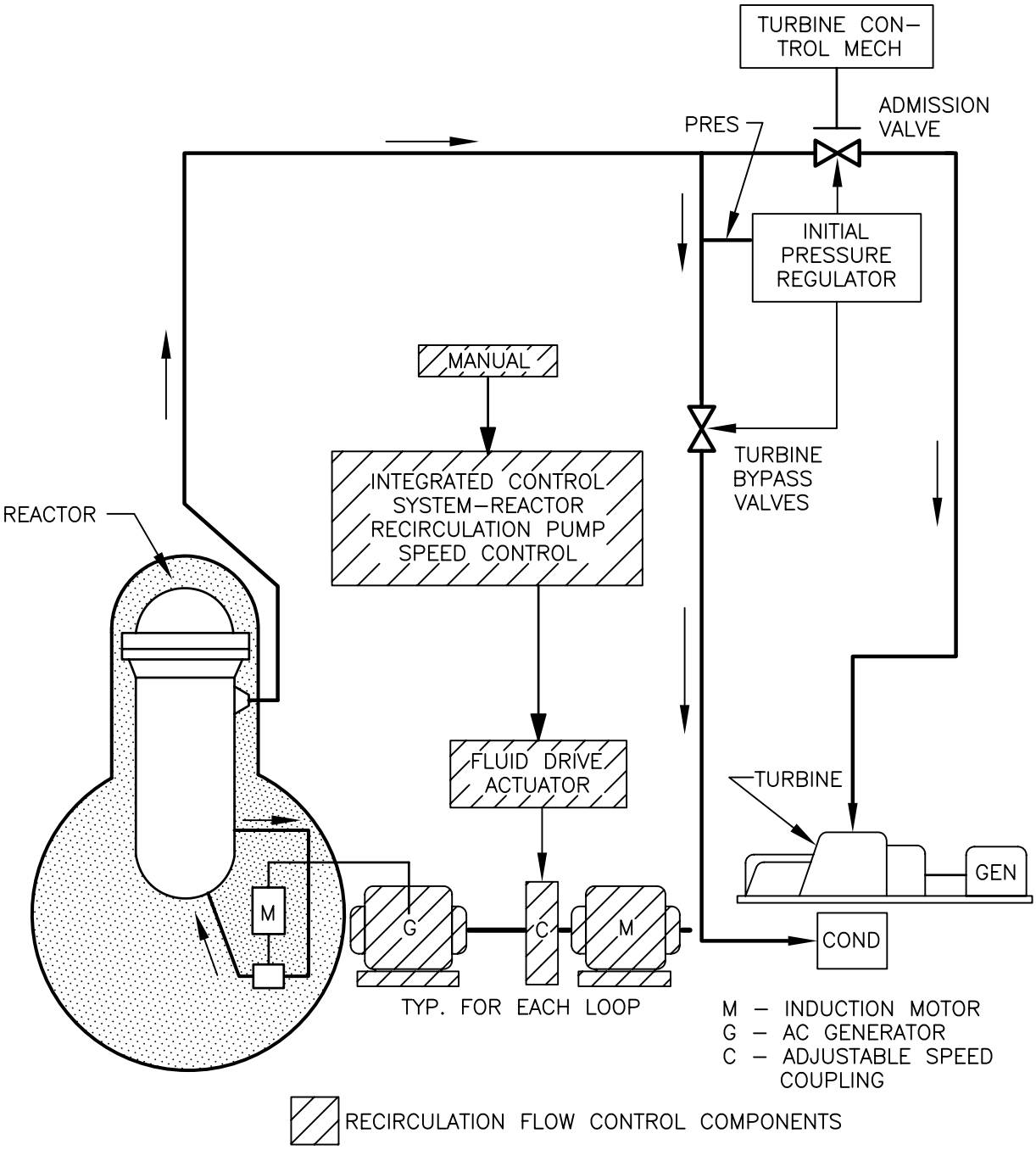

FSAR REV. 65

SUSQUEHANNA STEAM ELECTRIC STATION
UNITS 1 AND 2
FINAL SAFETY ANALYSIS REPORT

RECIRCULATION FLOW
CONTROL ILLUSTRATION

FIGURE 7.7-8, Rev. 57

Auto-Cad FSAR_7_7_8.DWG

FIGURE 7.7-9 REPLACED BY DWG. M1-C32-3, SH. 1

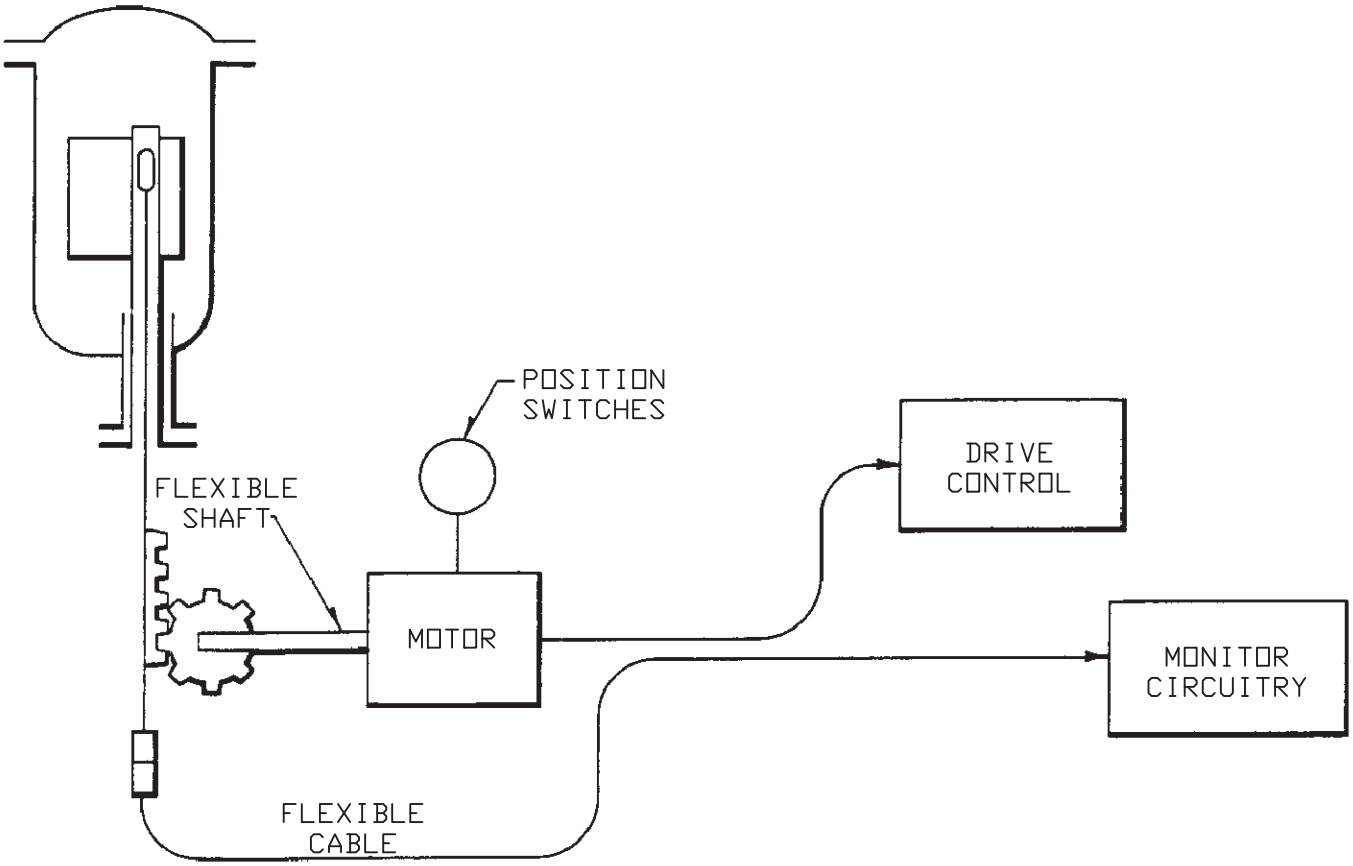

FSAR REV.65

SUSQUEHANNA STEAM ELECTRIC STATION
UNITS 1 & 2
FINAL SAFETY ANALYSIS REPORT

DETECTOR DRIVE
SYSTEM SCHEMATIC

FIGURE 7.7-10, Rev 49

AutoCAD: Figure Fsar 7_7_10.dwg

FIGURE 7.7-11 REPLACED BY DWG. M1-G33-143, SH. 1

FIGURE 7.7-11 REPLACED BY DWG. M1-G33-143, SH. 1

FIGURE 7.7-13 REPLACED BY DWG. A-105, SH. 1

UNIT 1	COMMON	UNIT 2	DESCRIPTION
PANEL NUMBER			
1C600	–	2C600	Process Radiation Record V.B.
1C601	–	2C601	Reactor Core Cooling B.B
1C607	–	2C607	T.I.P. Control & Monitor Cabinet
1C610	–	2C610	Control Rod Test Cabinet
1C614	–	2C614	NSS Temp. Record & Leak Detect. V.B.
1C644	–	2C644	V.B. Div. 2
1C645	–	2C645	V.B. Div. 1
1C650	0C650	2C650	Fire Protection V.B.
1C651	–	2C651	Unit Operation B.B.
1C652	–	2C652	Standby Information Panel V.B.
–	0C653	–	Plant Operating B.B.
1C654	–	2C654	Generator & Transfer Prot. Relay V.B.
1C656	0C656	2C656	Electrical Metering V.B.
–	0C657	–	Startup Transformer Prot. V.B.
–	0C658	–	Span Prot., Swyd. Cont. & Display V.B.
–	0C659	–	500 & 230 Kv Swyd. Cont. & Display V.B.
1C667	–	2C667	SPDS/Plant Monitoring Console
1C668	–	2C668	Unit Services B.B.
–	0C669	–	Stack Effl. Monitor Console
–	0C671	–	Meteorological & River Telemeter V.B.
1C673	0C673	2C673	Off-gas Recombiner Control V.B.
1C681	0C681	2C681	Heating & Ventilation V.B.
1C684	0C684	2C684	Unit Operating Monitor Console
1C692	–	2C692	Misc. Systems Record V.B.
1C693	0C693	2C693	Misc. Plant Inst. & Record V.B.
1C694	–	2C694	Bypass Indication V.B.
–	0C695	–	P.A. & Emergency V.B.
–	0C696	–	Earthquake Monitor V.B.
–	0C697	–	Motor Overload Bypass V.B.
–	0C699	–	Plant Security Cabinet

FSAR REV.68

SUSQUEHANNA STEAM ELECTRIC STATION
UNITS 1 & 2
FINAL SAFETY ANALYSIS REPORT

CONTROL ROOM PANEL
SAFETY RELATED DISPLAY INSTRUMENT
PLANT OPERATOR INTERFACE

FIGURE 7.7-13A, Rev 2

AutoCAD: Figure Fsar 7_7_13A.dwg

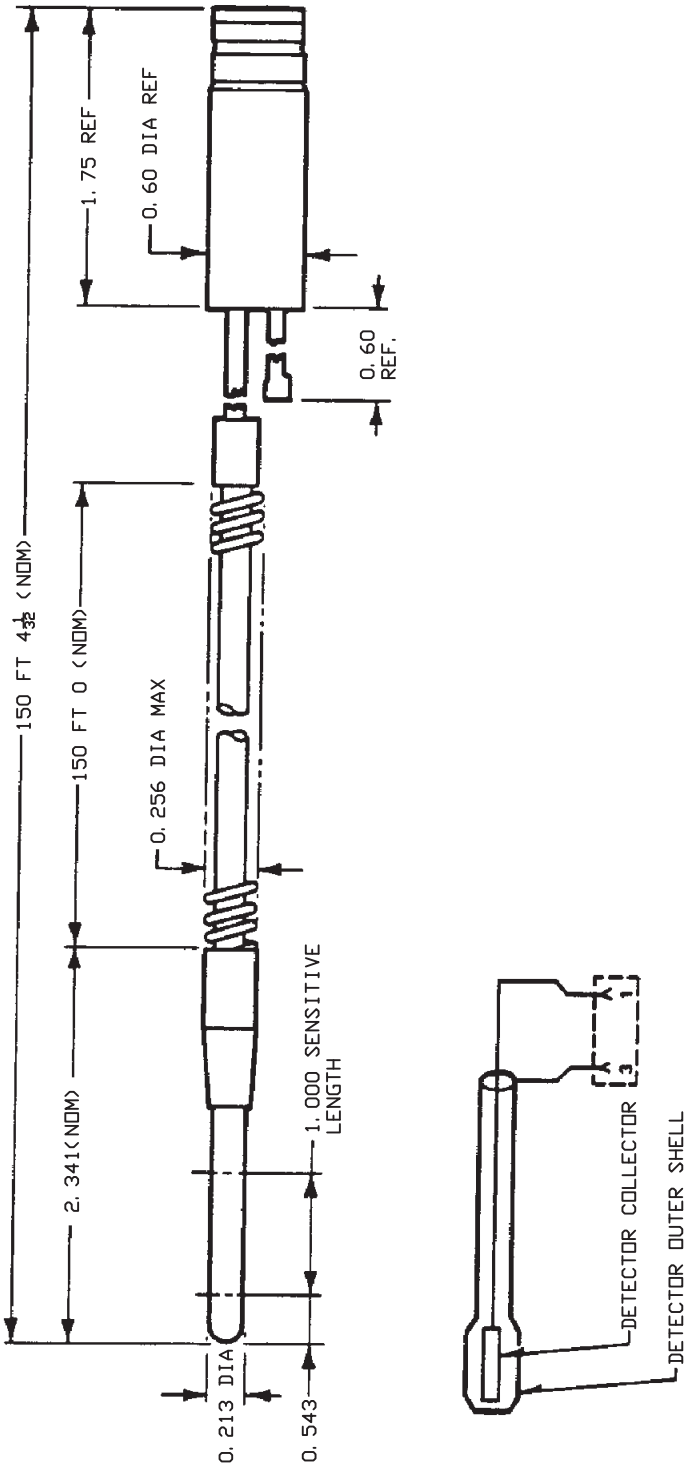

FSAR REV.65

SUSQUEHANNA STEAM ELECTRIC STATION
UNITS 1 & 2
FINAL SAFETY ANALYSIS REPORT

TRAVERSING IN-CORE
PROBE ASSEMBLY

FIGURE 7.7-14, Rev 49

AutoCAD: Figure Fsar 7_7_14.dwg

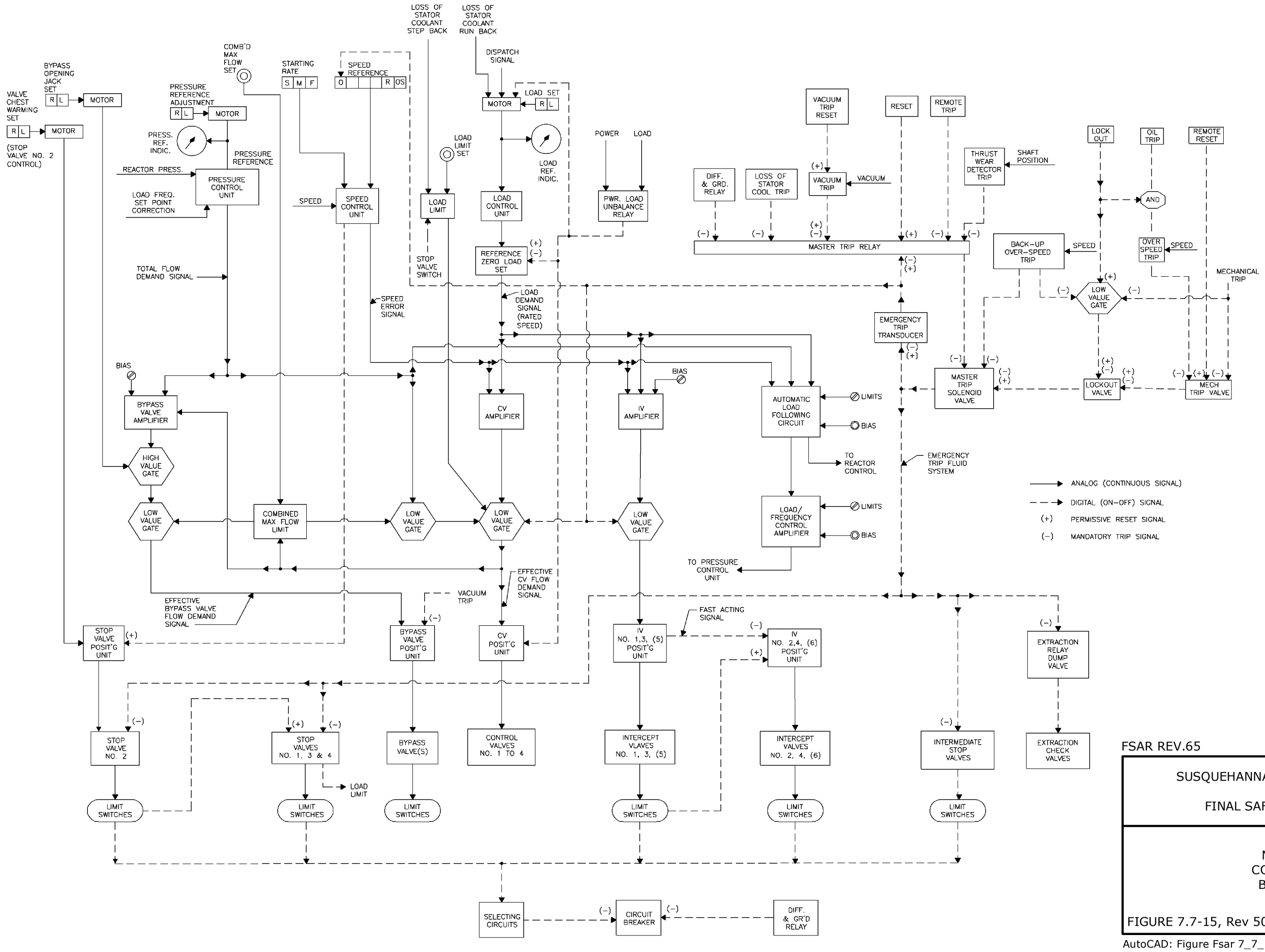

FSAR REV.65

SUSQUEHANNA STEAM ELECTRIC STATION
UNITS 1 & 2
FINAL SAFETY ANALYSIS REPORT

MAIN TURBINE
CONTROL SYSTEM
BLOCK DIAGRAM

FIGURE 7.7-15, Rev 50

AutoCAD: Figure Fsar 7_7_15.dwg

Security-Related Information
Figure Withheld Under 10 CFR 2.390

SUSQUEHANNA STEAM ELECTRIC STATION UNITS 1 & 2 FINAL SAFETY ANALYSIS REPORT
ASSIGNMENT OF LPRM INPUT TO RBM SYSTEM FIGURE 7.7-16

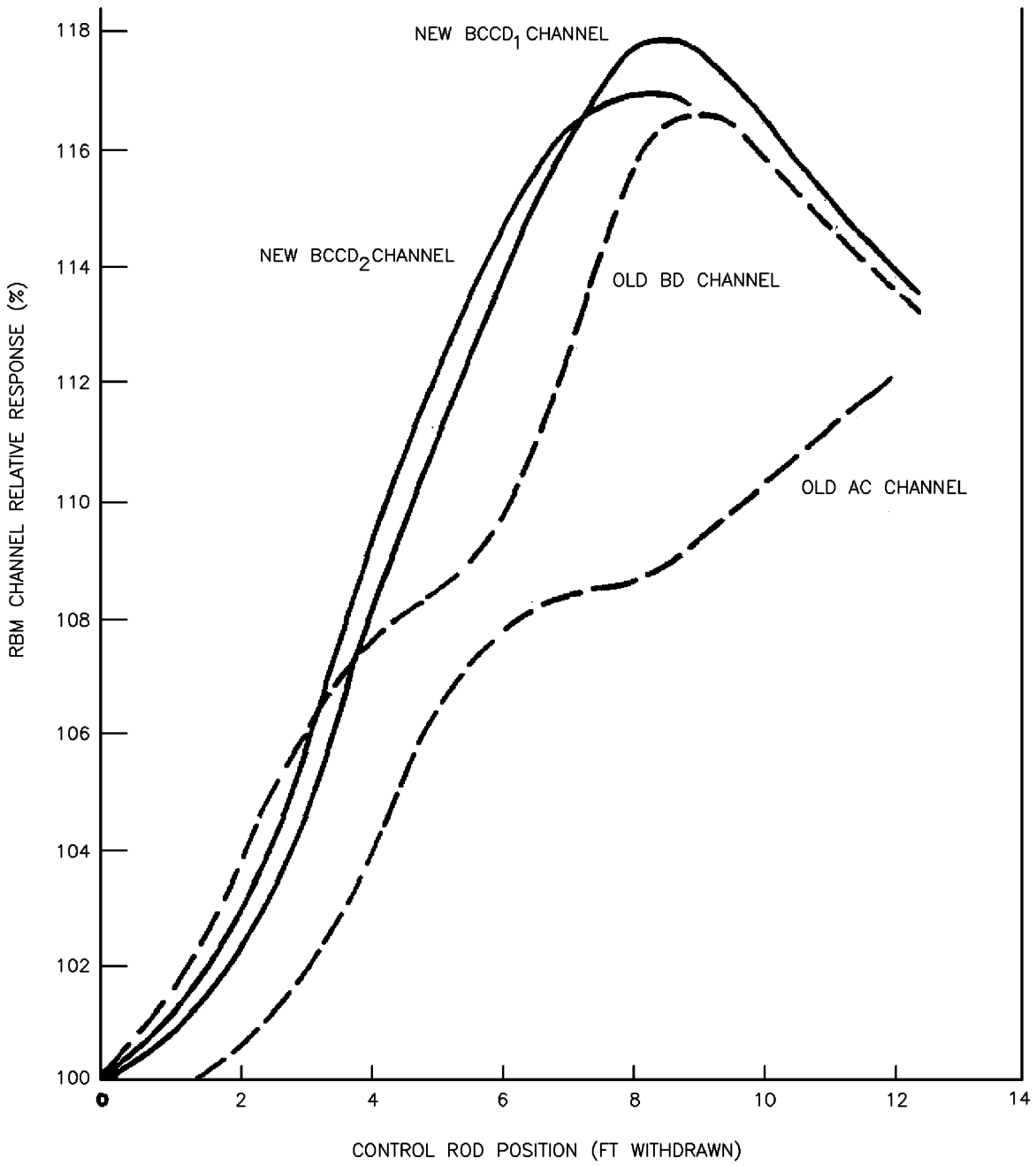

FSAR REV.65

SUSQUEHANNA STEAM ELECTRIC STATION
UNITS 1 & 2
FINAL SAFETY ANALYSIS REPORT

TYPICAL RBM CHANNEL RESPONSES OLD
VERSUS NEW LPRM ASSIGNMENT
(NO FAILED LPRMS)

FIGURE 7.7-19, Rev 2

AutoCAD: Figure Fsar 7_7_19.dwg