NSP

NORTHERN STATES POWER COMPANY

MINNEAPOLIS, MINNESOTA 55401

June 10, 1980

Director of Nuclear Reactor Regulation
U S Nuclear Regulatory Commission
Washington, DC 20555

PRAIRIE ISLAND NUCLEAR GENERATING PLANT
Docket No. 50-282 License No. DPR-42
50-306 DPR-60

Supplemental Information - License Amendment Request
dated January 31, 1980

Attachment 1 provides additional information related to the Prairie Island NGP Fuel Storage Facility modification. The following analyses are covered:

(A) Makeup Water System
(B) Structural
(C) Chemistry/Radiochemistry
(D) Radiological
(E) Materials/Processes
(F) Rack Disposal

This attachment is intended to address these areas of interest expressed by NRC Staff members at the March 19 meeting of NRC, NSP, and NSC personnel. Should you have any additional questions please contact this office.

L. O. Mayer

L O Mayer, PE
Manager of Nuclear Support Services

LOM/JAG/jh

cc J G Keppler
G Charnoff
MPCA
J W Ferman

8006170486 P

Attachment 1
June 10, 1980

PRAIRIE ISLAND NUCLEAR GENERATING PLANT
Docket No. 50-282 License No. DPR-42
50-306 DPR-60

Supplemental Information Related
to January 31, 1980 License Amendment Request

SPENT FUEL STORAGE CAPACITY MODIFICATION

A. Makeup Water Systems

The following systems may be used for makeup to the spent fuel pool(s):

(1) CVCS holdup tanks
(2) CVCS blender
(3) RWST
(4) Reactor makeup
(5) Demineralized water
(6) Fire protection

CVCS Holdup Tanks

Figure A-1 shows the CVCS holdup tank supply path to the spent fuel transfer canal. This system is Class I and is permanently piped. The 121 Recirc pump has a nonsafeguards power supply. The pump is rated in excess of 300 gpm. Lineup may be made in less than 10 minutes since the pump and all related valves are in the gas stripper feed pump room and the pump control switch is just outside this room. Existing procedures cover this option.

CVCS Blender

Figure A-2 shows an alternate flow path that can be used. Valves VC-15-59 and SF-14-4 would need to be opened and the blender flow adjusted (in the control room) for manual makeup. Blended flow at up to 100 gpm is possible. This flow path can be lined up in less than 10 minutes. This flow path is Class I up to SF-14-4. Existing procedures cover this option.

RWST

Figure A-3 illustrates the flow paths from either unit's RWST to the spent fuel pool. This system is permanently piped but is not Class I. Design flow of 80 gpm at 180 ft pressure could be provided by the refueling water purification pump. To lineup this flow path would involve opening 3 valves, closing 1 valve, verifying 1 valve closed, and starting the refueling water purification pump. This lineup may be achieved in less than 10 minutes. Existing procedures cover this option.

Reactor Makeup Storage Tanks

Figure A-4 illustrates the flow paths from either unit's reactor makeup storage tanks to the spent fuel pool. The system is permanently piped, but is not Class I. The reactor makeup pumps have nonsafeguards power supplies. Each reactor makeup water pump is capable of supplying water at 80 gpm at 83 psi pressure. Only 1 valve needs to be opened to supply water to the spent fuel pool. This lineup can be made in less than 10 minutes. Existing procedures cover this option.

Demineralized Water

There are 4 demineralized water (non Class I) hose stations near the spent fuel pools, as shown on Figure A-5. Each hose station is rated at approximately 20 gpm. To supply water to the spent fuel pool, a demineralized water hose is simply connected and the supply valve opened. Such an operation would take less than 10 minutes. Note also on Figure 4 of Exhibit A that demineralized water can be supplied to the discharge side of the SFP demineralizer.

Fire Protection

There are 2 fire hose stations near the spent fuel pools, as shown on Figure A-5. This system is not Class I.

Fire protection header pressure (100 psig nominal) can be maintained by any of the following:

Diesel fire water pump
Motor driven fire water pump
Jockey firewater pump (30 gpm)
Motor driven cooling water pumps
Diesel cooling water pumps
Screen wash pump

The fire water and screen wash pumps are rated at 2000 gpm and the cooling water pumps are rated at 13000 gpm. The diesel fire water pump and/or diesel cooling water pumps could be expected to maintain header pressure for the event of a loss of offsite power.

Use of the fire protection system would involve removing the fire hose from the rack and opening the nozzle and shutoff valves. This operation would take less than 10 minutes. The hose stations are rated at approximately 95 gpm. The minimum pressure at the highest elevation hose station is approximately 65 psig. Thus this system would assure water to the spent fuel pools.

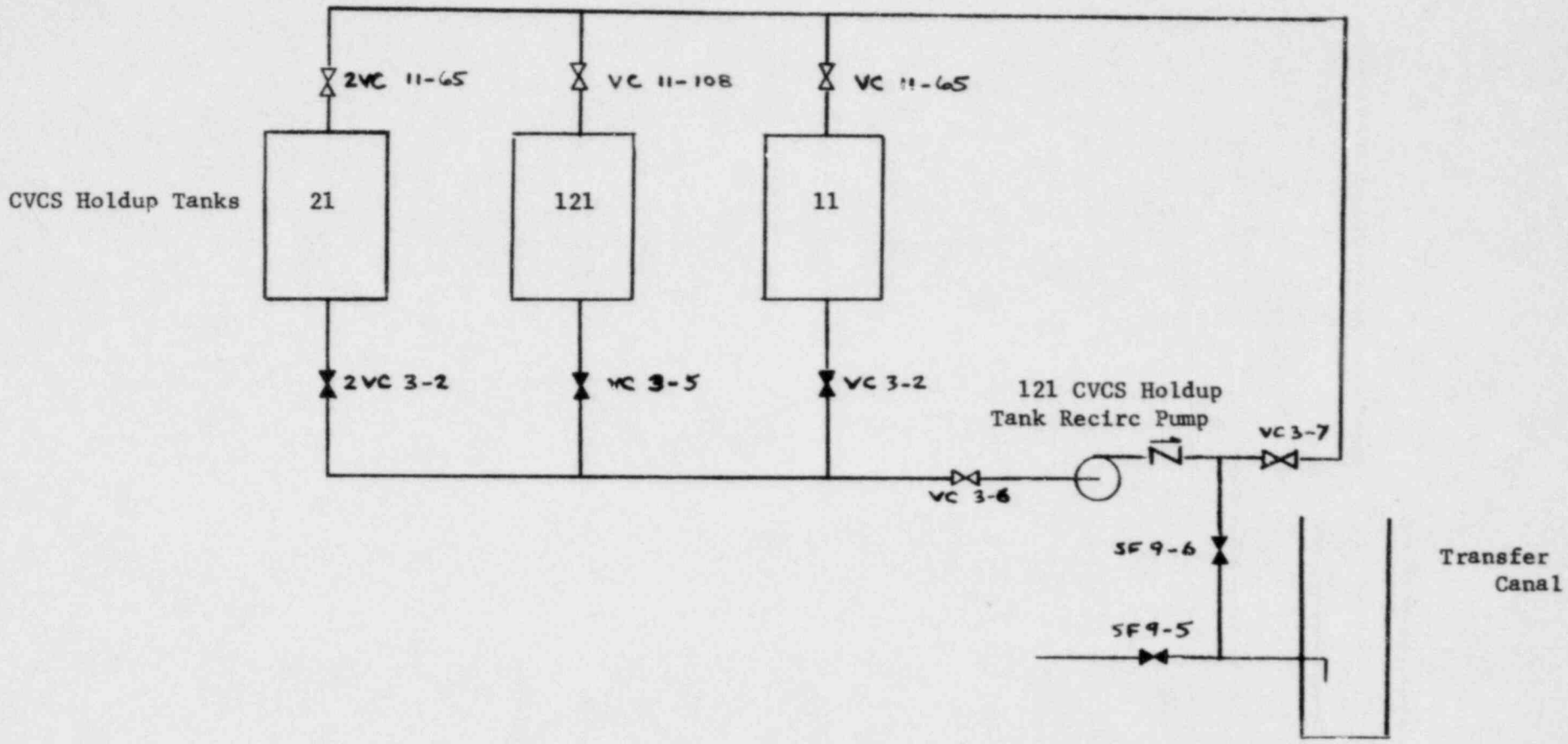

FIGURE A-1
Spent Fuel Pool Water Supplies

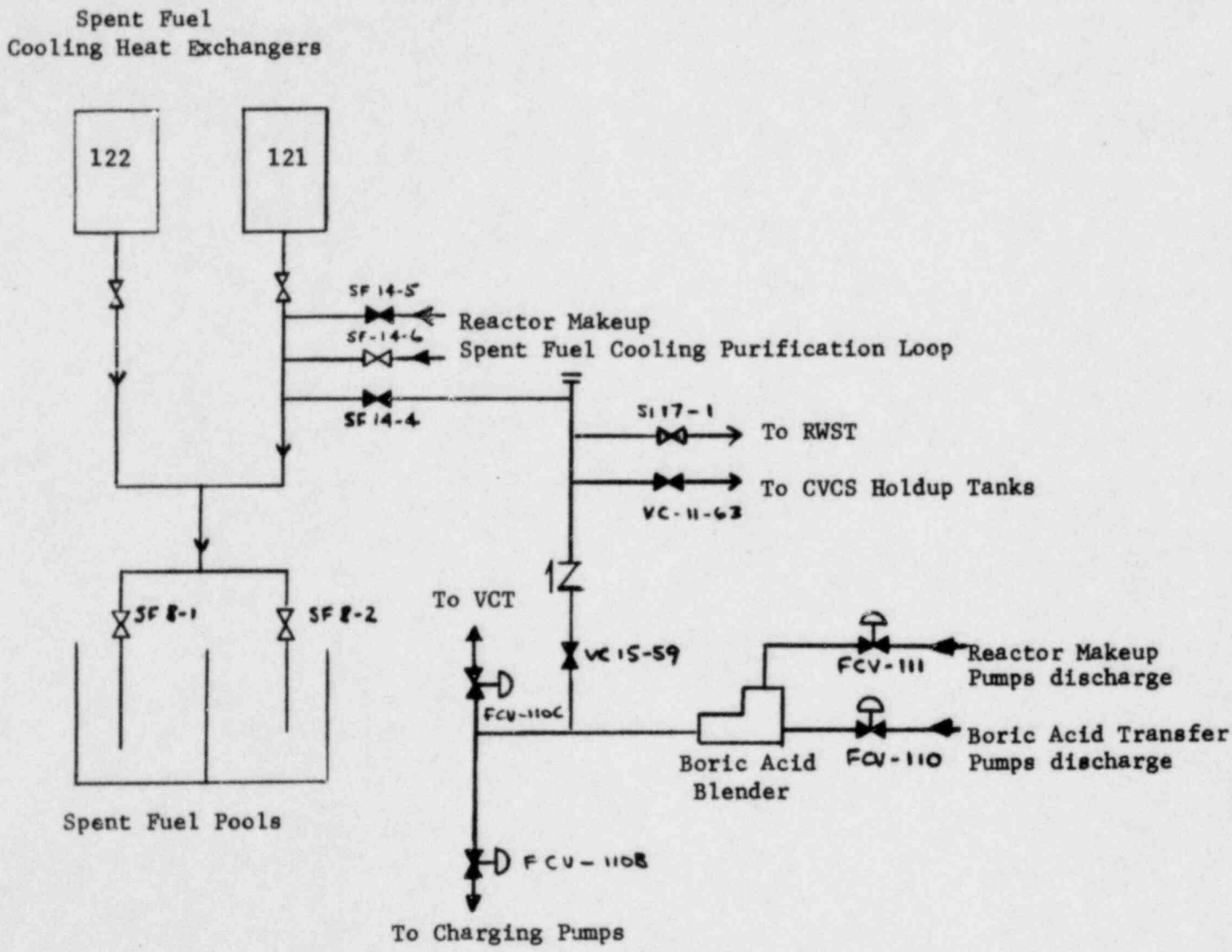

FIGURE A-2

Spent Fuel Pool Water Supplies

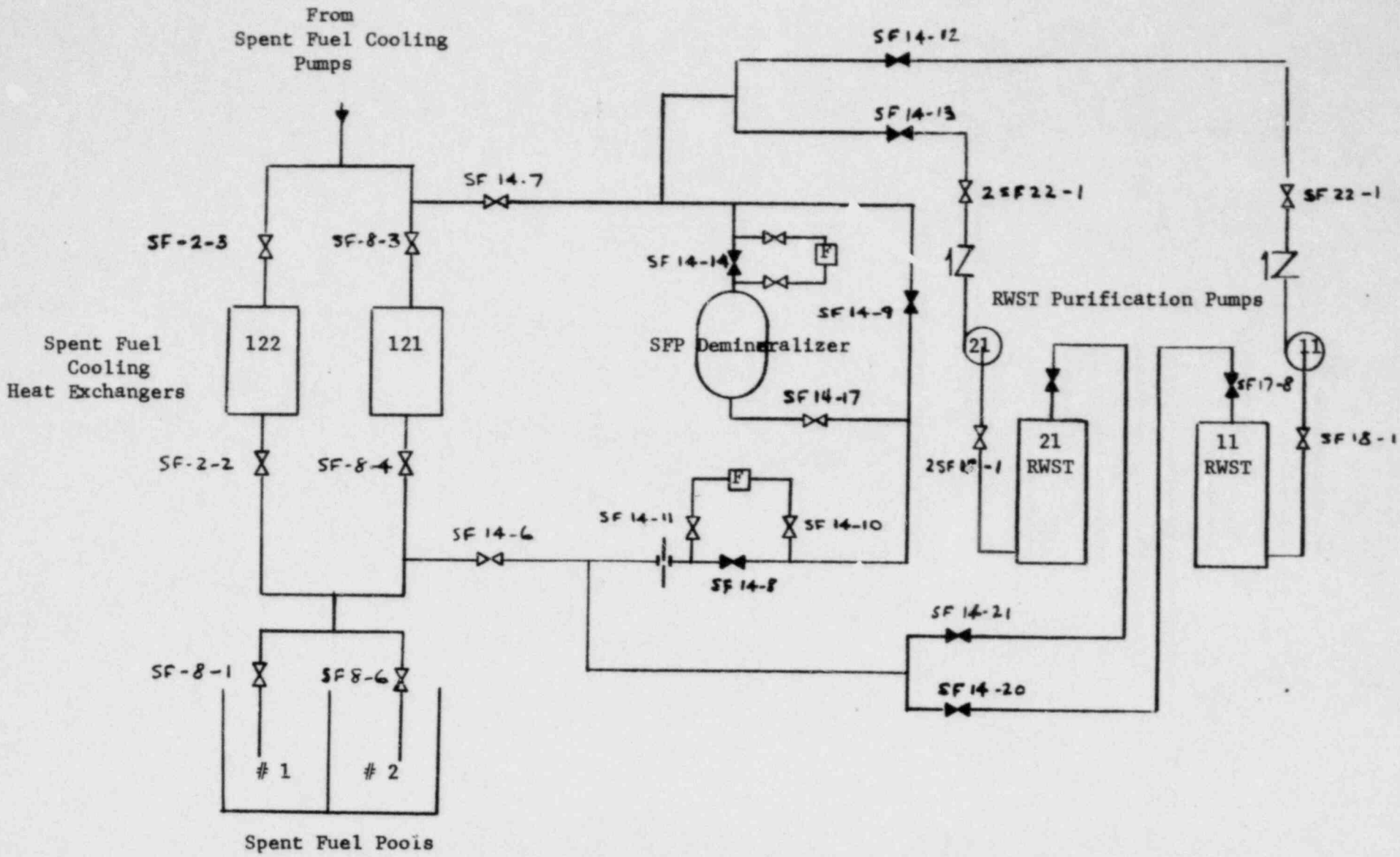

FIGURE A-3
Spent Fuel Pool Water Supplies

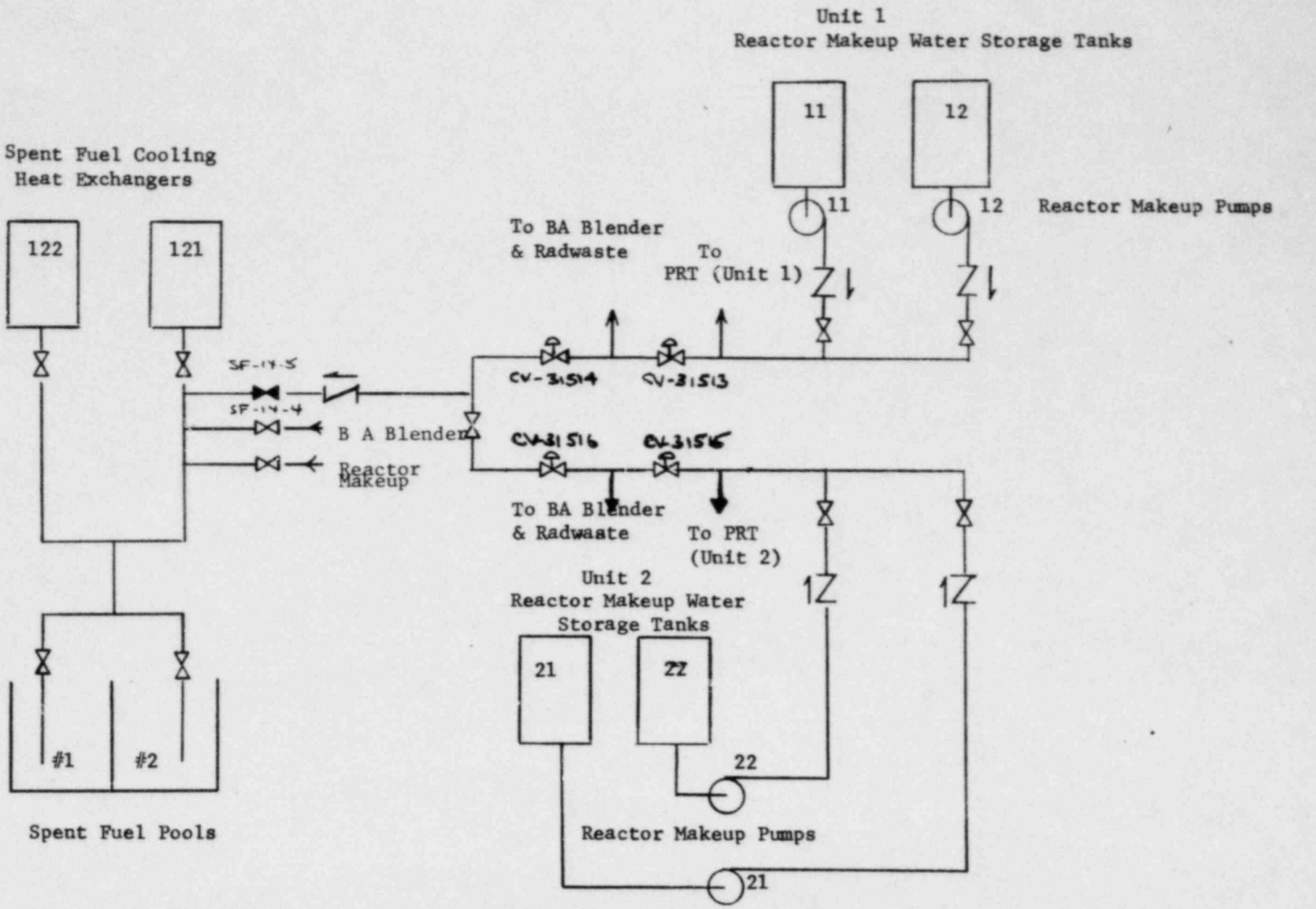

PRT = Pressurizer Relief Tank

FIGURE A-4
Spent Fuel Pool Water Supplies

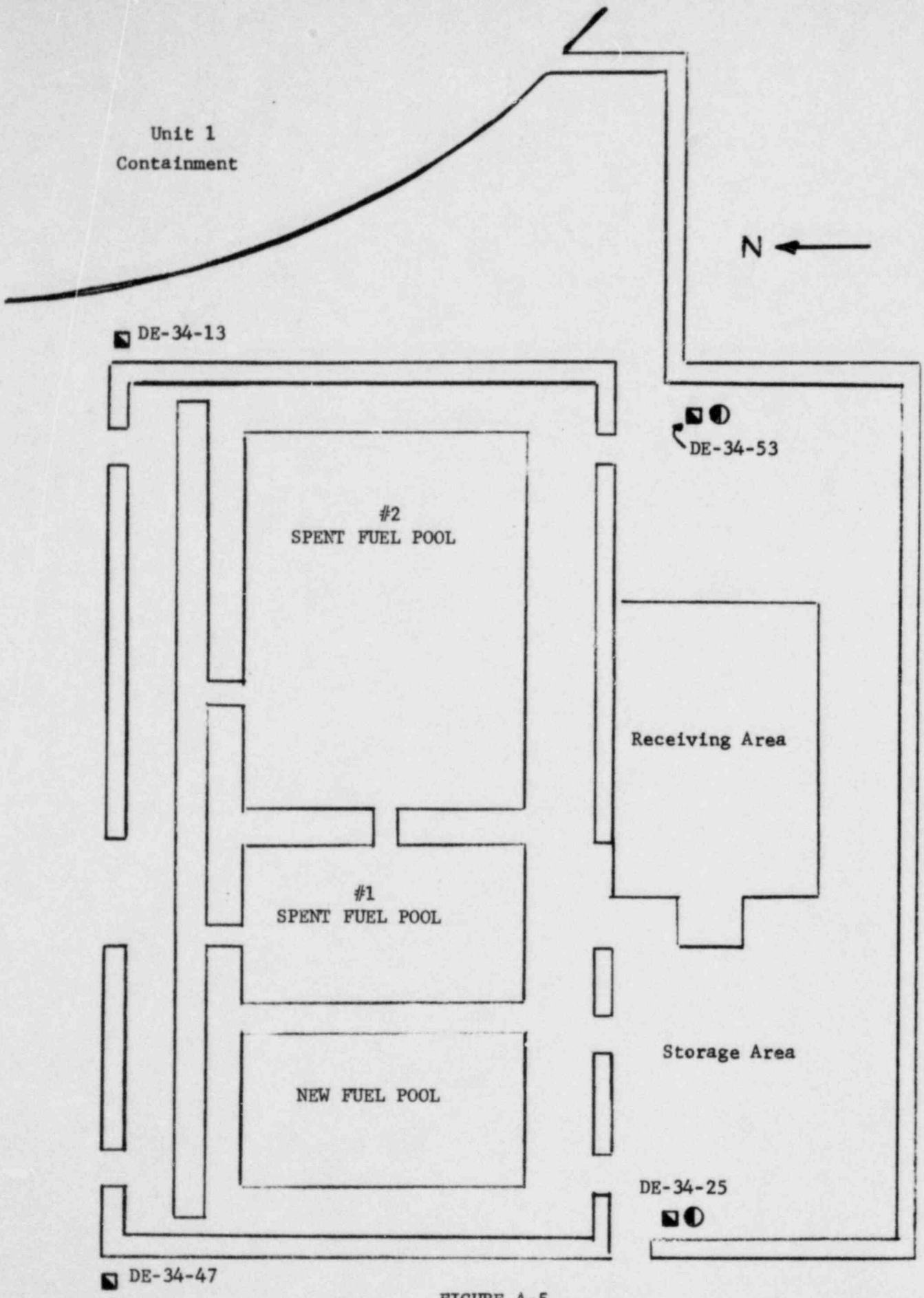

FIGURE A-5

Fuel Handling Building

Legend

Demin Water Hose Station

Fire Protection Hose Sta.

B. Structural Evaluation

Additional studies conducted in the structural area include::

(1) Straight drop of fuel assembly
(2) Inclined drop of a fuel assembly
(3) Overturning analysis
(4) SSE response spectrum
(5) Rack sliding analysis
(6) Seismic effects

1. Straight Drop of a Fuel Assembly

If a fuel assembly is dropped straight through an individual cell, it will impact on the two bars which are welded to the sides of the tube near its bottom end. During the normal condition the fuel assembly rests on these two bars. If the fluid drag is neglected, the energy with which the fuel assembly will impact these bars will be about 192 in-kip. If elasto-plastic behavior is assumed, it can be predicted that plastic hinges will form in the two bars at a maximum load of about 17 kips. The bars will bend and will cause the supporting tube walls to cave in (locally near the bottom end). But, since the tubes are separately attached to the rack structure, the local plastic deformation of the tube is not likely to alter the center distances between adjacent tubes. The two tube walls which are at right angles to the impacted bars are prevented from bulging outward in this region by the lower grid structure and the tube to grid shims.

The kinetic energy of the dropping fuel assembly will be partially absorbed by the crushing or collapsing of the fuel assembly itself, followed by the plastic bending of the fuel assembly support bars and the bending of the lower end of tube walls. The fuel assembly, with its remaining kinetic energy, will impact on one rack base assembly beam causing it to bend and twist locally. This may bend the storage tubes and change the center to center distance between the adjacent tubes. This was investigated by an analysis summarized below:

The bottom edge of the tubes are welded to the bottom grid which is welded to the base assembly beams. The maximum combined bending moment that can be transmitted to the tube due to the twisting and bending of the base assembly beam is 82 inch kips. The maximum lateral deflection of the tube due to this moment is 0.00015 inch. The lateral deflection of the adjacent tubes is likely to be less and in the same direction. However, to provide added margin of safety from critically consideration, it can be assumed that the adjacent tubes would remain stationary.

This deflection of the tube wall would have no effect on the calculated value of k_{eff}.

2. Inclined Drop on the Rack

To be conservative and to maximize the plastic deformation, only the vertical impact of the fuel bundle was analyzed assuming a point load instead of a finite impact area equal to the bottom dimensions of the fuel bundle. Inclined drop was considered less critical from the following considerations:

- The fuel bundle has small lateral stiffness and during an inclined drop, it is likely to bend, absorbing a significant amount of energy, thus reducing the impact energy. In other words, it will be a softer impact.

- An inclined drop under water will have a larger drag force on the bundle, and, consequently, a smaller impact.

- Local bending or buckling of the laterally impacted tube walls due to the horizontal component of the impact force cannot be propagated without stretching or crushing the tube walls in the horizontal direction, thereby absorbing more energy than has been considered in the present analysis.

- The upper grid structure and shims fill the space between tubes and maintain the rack pitch. An inclined fuel assembly drop would have to deflect this grid structure plus the tube to affect k_{eff}.

Since the fuel is located below the top of the tube, the falling spent fuel assembly does not change the results of the previous analysis of the spent fuel assembly drop accident.

3. Overturning Anlaysis

The original overturning analyses considered the rack either fully loaded or empty. Additional analyses have been performed assuming various partially loaded rack conditions, noted below. The minimum factor of safety is 18.4.

Loading Condition	Factor of Safety Against Overturning
Fully Loaded Rack	84
3 Rows Loaded on One Side	21.9
2 Rows Loaded on One Side	18.4
1 Row Loaded on One Side	18.7
Empty Rack	25

The fuel rack overturning analysis was performed assuming the following sequence:

1. The coefficient of friction is 0.2
2. An earthquake starts the rack sliding
3. When the rack reaches its maximum velocity, the rack base is stopped (essentially infinite friction)
4. The overturning potential of the rack is determined at this point

The above described case envelopes all other potential cases for overturning. The impact analysis described in Exhibit C of the January 31, 1980 license amendment request is based on the velocity in step 3 above and bounds the case where the friction coefficient may vary from 0.2 to 0.75.

4. SSE Response Spectrum

The SSE response spectrum for horizontal motion was developed by multiplying the OBE design response spectrum valves by 2 while the time-history was generated from this spectrum using NSC's proprietary computer program NSCTH. The OBE design response spectrum was obtained from Reference 14 of the January 31, 1981 Exhibit C report "Revised Earthquake Analysis for Prairie Island Nuclear Generating Plant.") That reference did not include a SSE time-history representing the behavior of the spent fuel pool floor but recommended using two times OBE response for computing SSE values. Since this reference did not contain a time-history for Prairie Island, the time-history of floor motion compatible with the SSE response spectrum curve (i.e., twice the OBE spectrum values) was synthesized in order to perform nonlinear time-history sliding analysis.

5. Rack Sliding Analysis

For welded steel structures, USNRC Regulatory Guide 1.61 recommends a damping value of 2% for OBE motion and 4% for SSE motion. Thus, the damping value used is considered conservative. Also, additional damping which would result from fluid drag force and floor friction force was ignored, adding further conservatism.

6. Seismic Effects

The mathematical model used in the analysis as shown in Exhibit C Figure 3.4-5 (January 31, 1980 License Amendment Request) does not separate the fuel and the rack. In performing the seismic response analysis, the mass of each fuel assembly and the water inside the storage tube was assumed to move in unison with the tube itself. Even though there is a small gap between the fuel assembly and the storage tube, such a representation is judged to be adequate from the following considerations:

a) The gap is small and is filled with water. Movement of the fuel assembly within such a small space is resisted by the water that must be squeezed around the fuel before the gap can be closed.

b) The movement of the assemblies inside the storage tubes is random and the probability for all the assemblies stored in a rack to move in unison is low. Thus, during a seismic event, even if the assemblies "rattle" inside the tubes, the additional load due to such rattling is not likely to be more than what has been computed assuming that all the assemblies move in-phase, which by itself is a conservative assumption. Local stresses near the vicinity of the impact area can be higher, which may cause local yielding of the tube walls near the top; but, this part of the tube is neither required for maintaining the structural integrity of the rack nor is it likely that the local yielding will propagate to the region of active fuel.

c) Due to lateral flexibility of the tube wall and the fuel assembly, the actual impact between them is likely to be soft and inconsequential.

d) In the analysis, NSC assumed that all the fuel bundles would be in-phase with the rack structure, thereby maximizing the seismic loads on the rack structure. Two analyses were performed to evaluate the maximum seismic stresses in the rack structure. In the report these are identified as configuration I analysis and configuration II analysis. Configuration II represents the extreme condition in which the rack is assumed to be tilted on one leg and subjected to the upper bound loads determined from the maximum friction coefficient. In other words, even if there is any dynamic amplification (for a sliding type rack this is likely to be small, if any) due to the interaction of fuel bundles and the rack structure, the total seismic loads cannot exceed those for which configuration II was analyzed. Dynamic interaction between the fuel bundles and the rack structure, however, may produce local stresses at the upper part of the tube, as described above.

C. Chemistry/Radiochemistry Analyses

A SFP chemistry surveillance program has been in effect at Prairie Island Nuclear Generating Plant since the initial filling of the spent fuel pools. This chemistry program currently involves weekly sampling of the following parameters -

Chlorides	pH
Fluorides	SFP Ion Exchanger DF
Boron	Tritium

It should be noted that this is far beyond Technical Specification requirements. Chlorides and fluorides are controlled to limit corrosion as a prudent operating practice. If a preestablished limit is exceeded, the SFP demineralizer would be used to reduce the halide ion level.

Boron is controlled at approximately 2000 ppm to assure there would be no reduction in the refueling pool and RCS concentration during refueling fuel handling operations. The boron provides additional shutdown margin for which credit is not taken in the criticality safety analyses. If the concentration is below a preestablished limit, boric acid would be added.

pH is monitored to assure pH is in agreement with the value expected for the boric acid concentration. If the pH is not in line with that expected, investigative and corrective action would be initiated.

SFP Ion Exchanger decontamination factor (DF) is monitored to determine the effectiveness of the ion exchanger at removing impurities. The inlet value of activity also is a representative value of SFP activity. If the DF is unacceptable, the ion exchanger resin would be changed.

Tritium is monitored to determine if there is any anomalous behavior. Investigative action would be initiated if unusual behavior is noted.

Radionuclide activities are determined using a Germanium (lithium drift) semiconductor detector with 4096 channel analyzer. A computer program provides spectrum separation, nuclide identification, and activity determination.

Exhibit C, Section 3.6.2 reported that "cesium will be the main fission product contaminant in the spent fuel storage pool". Exhibit A, Section 5.3.3 reported the activity levels of the major nuclides. It may be noted that Cs^{134} and Cs^{137} were detected before the refueling outage. However, levels were less than MDA (minimum detectable activity) after the outage. It is believed that the Cs^{134} and Cs^{137} levels were obscured by the Sb^{124} and Co^{58} the activity of which rose by a factor of 10 after the refueling. A large increase in activity of a nuclide with gamma energies above the Cs^{134} and Cs^{137} gamma energies can reduce the effectiveness of the program at distinguishing these nuclides because of the increased background. In addition, the fuel leakage for Prairie Island has consistently been lower than the 1% assumed in the POOLRAD calculations reported in Table 3.6-1, Exhibit C, thus the increase in activity would be expected to be less than that reported.

D. Radiological Analysis

An analysis was conducted to determine the radiological impact if boiling of the SFP water occurs due to a loss of cooling function. This evaluation included the operation of the SFP ventilation system and consideration of the ability of the system to handle gases and humidity.

If loss of the cooling function should occur in the spent fuel pool (SFP), makeup water would be added to maintain the water level above the fuel elements. In this event, boiling could occur with potential release of small droplets of solution spray. Based on an assumed air concentration of 10 mg/m^3 for the aerosol resulting from release of the spray, doses at the exclusion area boundary were estimated. The external whole body doses for the radionuclides with the largest releases, ranged from $6x10^{-18}$ rem to $9x10^{-7}$ rem for eight-hour exposures. Doses to the whole body due to inhalation for eight hours ranged from $8x10^{-16}$ to $8x10^{-6}$ rem while doses to other organs due to inhalation, ranged from $1x10^{-15}$ rem to the liver to $5x10^{-5}$ rem to the thyroid. The estimated doses are listed in Table D-1. The doses are far below 10 CFR 100 limits of 300 rem to the thyroid and 25 rem to the whole body.

As indicated in the FSAR, (Section 5.5.4) the filter system on the emergency spent fuel pool (SFP) ventilation system contains a heater at the inlet to the HEPA and charcoal filter train to reduce the relative humidity in the filters to 70%, with 100% saturated air entering the system. Thus, the filter design is water-resistant. This resistance applies to both the HEPA filters and the charcoal beds.

Discussion of Loss of Cooling Accident in the Spent Fuel Pool

The Spent Fuel Pool (SFP) water is maintained at a temperature of about 115°F cooled by plant component cooling water. If this heat exchanger cannot function, a backup exchanger is provided to maintain the SFP water at a temperature below 140°F. In the very unlikely event that both exchangers are inoperative, the SFP water could overheat and boil. In this case, water (using the fire protection system, if necessary) is added to the pool to make up water lost by evaporation, in order to maintain the pool level above the fuel. Even with makeup water added, boiling could continue with a potential loss of radionuclides from the SFP.

It was assumed that all of the noble gas radionuclides would be released from any failed fuel as a result of the temperature increase, and would volatilize from the pool water because of low solubility of these elements in water. It was also assumed that iodine, which was probably originally present as iodide in the water[1], would become oxidized by oxygen and would be released as molecular iodine. It was assumed that organic iodide and hypiodite would not be present in the pool water.

Non-volatile radionuclides were assumed to become airborne as a result of small droplets of solution being produced as a spray when bubbles burst at the surface of the pool water. A similar phenomenon is thought to be responsible for producing airborne droplets of salt spray from the oceans.[2] It was assumed that the concentration of the radionuclides in the aerosol droplets would be the same as in the pool water. It was also assumed that the boiling would continue for eight hours before

restoration of cooling. (Doses can readily be adjusted for other times). It was also assumed that the concentration of radionuclides in the pool water at the beginning of boiling would remain constant during the period of boiling.

Boiling would also tend to release corrosion product oxide (crud) from the fuel surfaces. Thus, radiocobalt concentrations in the pool water would probably tend to increase when boiling occurs. For this study, relatively high concentrations of cobalt-58 and cobalt-58 and cobalt-60 found in the SFP water after a refueling operation[3] were used in the calculations. These values are about 10 times greater than those obtained from concentration measurements made sometime after refueling[3], and 10 to 100 times greater than values reported in a survey of SFP facilities[4].

The concentration of airborne droplets was assumed to be 10 mg/m^3 based on studies at Oak Ridge National Laboratory[5]. This air loading corresponds to a fog and is, therefore, a very conservative assumption. It was assumed that the water in the spray would evaporate upon entering the ventilation system heater, leaving a solid aerosol to be filtered.

Doses to the maximum individual at the exclusion boundary were calculated using models and dose conversion factors from Regulatory Guides 1.25 and 1.109. These models were basically the same as used in the Prairie Island FSAR. The dispersion factor at the exclusion area boundary was taken to be 6.54×10^{-4} sec/m^3 as reported in the Prairie Island FSAR. A decontamination factor (DF) of 10^6 was assumed for particulates released to the environment. A DF of 20 (charcoal efficiency of 95%) was assumed for iodine, and a DF of one was assumed for noble gases. These DF's were based on information in the FSAR.

Based on the assumed airborne concentration of 10 mg/m^3 in the SFP facility and a flow rate through the ventilation system of 5000 ft^3/min (FSAR), the amounts of particulate radionuclides released to the environment per second were estimated. These values ranged from 2×10^{-18} to 5×10^{-16} Ci/sec. The volatile iodine average rate was estimated to the 5×10^{-7} Ci/sec, and the noble gas average release rate was estimated to be 1×10^{-8} Ci/sec. Calculated eight-hour doses for the dominant radionuclides in these releases are shown in Table 1. The values shown are all far smaller than the limiting values from 10 CFR 100 of 25 rem to the whole body and 300 rem to the thyroid. Thus, doses from the postulated accident scenario would be well within acceptable limits even for the conservative conditions assumed.

TABLE D-1

Calculated Eight-Hour Doses to the Maximum Individual of the Public Due to Loss of Cooling of Spent Fuel Pool

Radionuclide	Concentration In Pool (Ci/ml)[a]	External Gamma Whole Body Dose (rem)	Inhalation Dose (rem) Body	Inhalation Dose (rem) Other Organ
Cs-137	$1x10^{-4}$	$6x10^{-18}$	$8x10^{-16}$	$1x10^{-15}$ (liver)
I-131	$2x10^{-4}$	$9x10^{-7}$	$8x10^{-6}$	$5x10^{-3}$ (thyroid)
Co-58	$2x10^{-2}$	$2x10^{-15}$	$8x10^{-16}$	$4x10^{-13}$ (lung)
Co-60	$4x10^{-3}$	$1x10^{-15}$	$1x10^{-15}$	$5x10^{-13}$ (lung)
Xe-133	$2x10^{-7}$	$1x10^{-9}$	-	-

a. Cs-137, I-131, Xe-133, concentrations were calculated by Nuclear Services Corporation's POOLRAD computer code. Co-58 and Co-60 were based on Prairie Island SFP measurements made after refueling (Spent Fuel Storage License Amendment Request dated January 31, 1980).

REFERENCES:

1. Cubicciotti, D. Panecki, J., Strain, R., Greenberg, S., Neimark, L., and Johnson, C., The Nature of Fission-Product Deposits Inside Light-Water-Reactor Fuel Rods, Stanford Research Institute, Menlo Park, CA; November 1976.

2. Junge, C. E., Air Chemistry and Radioactivity, Academic Press, NY; 1963, p 156.

3. Spent Fuel Storage License Amendment Request, Prairie Island Nuclear Generating Plant, Northern States Power Co., Minneapolis, MN; January 31, 1980.

4. Johnson, A.B., Jr., BNWL-2256, Behavior of Spent Nuclear Fuel in Water Pool Storage, Battelle Pacific Northwest Laboratories; September 1977.

5. ORNL 4451, Siting of Fuel Reprocessing Plants and Waste Management Facilities, Oak Ridge National Laboratory; July 1970.

E. Materials/Processes

The proposed fuel racks are fabricated entirely of 304 stainless steel with the exception of the adjusting bolts of the rack feet. These bolts are made from 17-4 PH stainless steel. These are the materials used in the present Prairie Island fuel racks, and these materials are used in spent fuel racks in many other plants.

The metallic parts of the fuel assembly are fabricated from zircaloy, stainless steel and inconel. Fuel composed of these materials has been stored in stainless steel fuel racks for many years with no evidence of galvanic corrosion. We find no reason to expect galvanic corrosion of the fuel or fuel rack, if the proposed fuel racks are installed.

The materials involved are essentially similar to those involved in the previous 1977 rerack at the Prairie Island Generating Plant.

The 17-4 pH steel used in the adjusting bolts will be heat treated at 1150F in accordance with ASTM A564. This high heat treatment temperature is selected to preclude cracking that is observed if too low a temperature is used.

The Boraflex sheet to be used in the racks is being purchased in accordance with a thickness specification of 0.125$\pm$ .011 inches. The boron-10 in the Boraflex sheet is also controlled by specification to be .04 gm/cm^2 at a 95% confidence level. The Boraflex sheet is to be sandwiched between the stainless steel in the tubes as shown in Figure 3.3-1 of Exhibit C of the January 31, 1980 license amendment request. There is no interference such that bending of the steel sheet would be expected to occur even though some Boraflex shrinkage may be expected with exposure. The fuel tubes will be vented to eliminate the problem of bulging due to offgassing or hydrostatic pressure.

The fuel storage tubes consist of two concentric stainless steel tubes with the Boraflex located in the annulus formed by these tubes. The annulus region is vented at both the top and bottom of the neutron absorber region. Venting is provided by an open space approximately one inch by 1/8 inch in each of the four corners of the tube. The Boraflex is not attached to either of the stainless steel tubes. It is captured in the annulus and is supported on a stainless steel strip at the bottom of the annulus.

The pressure exerted on the Boraflex by the stainless steel tubes is minimal, and shrinkage of the Boraflex will not produce stress in the storage tubes or rack structure. Testing performed to date on the Boraflex material indicates that shrinkage during use in the fuel pool will be less than 1%. Since the testing to date has included a high neutron flux which does not occur in spent fuel storage, actual shrinkage in the fuel pool is expected to be significantly less. Boraflex shrinkage of 1% will not have any effect on the acceptability of the proposed spent fuel rack design.

F. Rack Disposal

NSP intends to dispose of the modules currently in the spent fuel pools by shipping them as LSA material to a low level radwaste disposal facility. For the purpose of construction planning and radiation exposure calculations it was assumed that the modules will be shipped in wooden boxes which meet LSA packaging requirements. In light of national concerns with low level radioactive material storage, NSP will continue to evaluate other alternatives, e.g., electropolishing.