NRC FORM 366
(7-77)

U.S. NUCLEAR REGULATORY COMMISSION

LICENSEE EVENT REPORT

CONTROL BLOCK: (1) (PLEASE PRINT OR TYPE ALL REQUIRED INFORMATION)

01 | NYJAF1 (2) | 00-0000-000 (3) | 41111 (4) | (5)
LICENSEE CODE — LICENSE NUMBER — LICENSE TYPE — CAT

CON'T
01 | REPORT SOURCE L (6) | 05000333 (7) | 012479 (8) | 021679 (9)
DOCKET NUMBER — EVENT DATE — REPORT DATE

EVENT DESCRIPTION AND PROBABLE CONSEQUENCES (10)

02 Please See Attachment

03

04

05

06

07

08

09 | SYSTEM CODE CA (11) | CAUSE CODE X (12) | CAUSE SUBCODE X (13) | COMPONENT CODE VALVEX (14) | COMP. SUBCODE X (15) | VALVE SUBCODE B (16)

(17) LER/RO REPORT NUMBER: EVENT YEAR 79 — SEQUENTIAL REPORT NO. 006 — OCCURRENCE CODE 03 — REPORT TYPE L — REVISION NO. 0

ACTION TAKEN X (18) | FUTURE ACTION X (19) | EFFECT ON PLANT Z (20) | SHUTDOWN METHOD Z (21) | HOURS 0000 (22) | ATTACHMENT SUBMITTED Y (23) | NPRD-4 FORM SUB. Y (24) | PRIME COMP. SUPPLIER Z (25) | COMPONENT MANUFACTURER Z999 (26)

CAUSE DESCRIPTION AND CORRECTIVE ACTIONS (27)

10 Please See Attachment

11

12

13

14

15 | FACILITY STATUS E (28) | % POWER 073 (29) | OTHER STATUS NA (30) | METHOD OF DISCOVERY A (31) | DISCOVERY DESCRIPTION (32) Operator Observation

16 | ACTIVITY RELEASED Z (33) | CONTENT OF RELEASE Z (34) | AMOUNT OF ACTIVITY NA (35) | LOCATION OF RELEASE NA (36)

17 | PERSONNEL EXPOSURES NUMBER 000 (37) | TYPE Z (38) | DESCRIPTION (39) NA

18 | PERSONNEL INJURIES NUMBER 000 (40) | DESCRIPTION (41) NA

19 | LOSS OF OR DAMAGE TO FACILITY TYPE Z (42) | DESCRIPTION (43) NA

790223 0088

20 | PUBLICITY ISSUED N (44) | DESCRIPTION (45) NA

NRC USE ONLY

NAME OF PREPARER W. Verne Childs PHONE 315-342-3840

GPO 917-926

During normal operation, Operations personnel noted a ground fault on 125 VDC station battery "A". Investigation traced the ground to the bellows failure pressure switch circuit on safety/relief valve 02-RV-71J.

The ground was cleared by removing the fuses for the air operator and bellows failure pressure switch. This action required that the valve be declared inoperable which is contrary to Technical Specification Appendix A, Paragraph 3.6.E.1. During the thirty days in which operation is permitted by specification 3.6.E.2.a, the valve was restored to a fully operable status on February 8, 1979 (fifteen days after the event). This action was accomplished by installing a temporary isolated 125 VDC power supply to the bellows failure pressure switch (see Figures 1 and 2) and replacing the fuses that were initially removed to clear the ground. The circuits were checked for operability (to the extent possible from outside of primary containment) with satisfactory results and valve 02-RV-71J was declared fully operable.

During the Snubber Inspection Outage currently scheduled to start on March 30, 1979 repairs and restoration of the circuit will be completed and a follow-up report submitted.

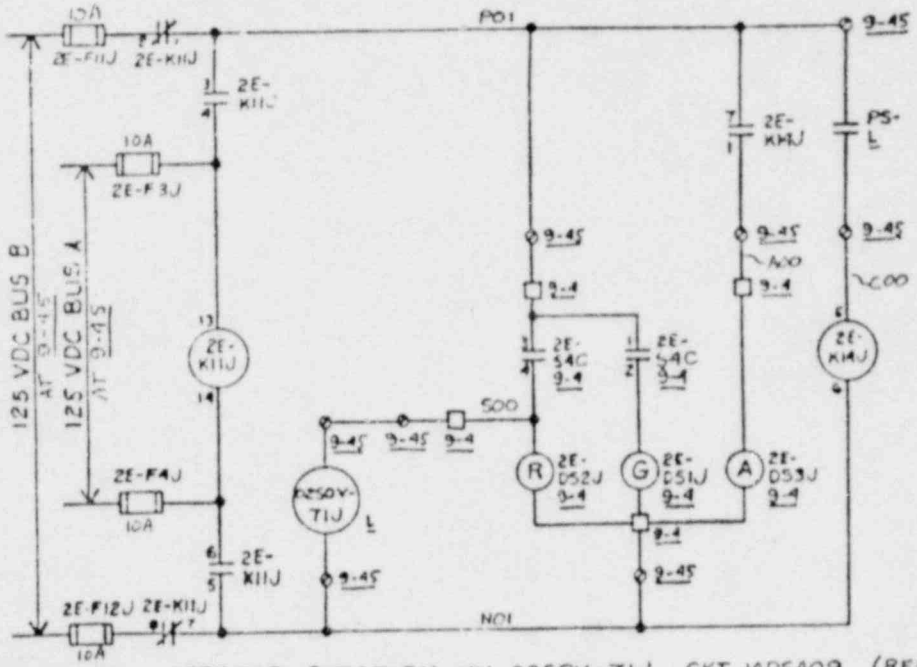

MANUAL DEPRESSURIZATION VV 02SOV-71J CKT 1ADSA09 (RED)

NOTES

1. APPLICABLE LOGIC DIAG. (GE DWG. 730E149BA)
2. ALL EQUIP. LOCATED IN GE RELAY CABINET 9-45 UNLESS OTHERWISE NOTED.
3. PRESSURE SWITCHES PS-LB CLOSE ON PRESSURE INCREASE AT VALVE BELLOWS.
4. —□— TERMINAL IN GE CONTROL BOARD.
5. —○— TERMINAL IN GE RELAY CABINET.
6. REFER TO GE ELEM. DIAG. 791E453 FOR RELAY AND CONTROL SWITCH CONTACT DEVELOPMENT.

REFERENCE ONLY

FIGURE 1: EXISTING ELEMENTARY DIAGRAM FOR MANUAL VALVE OPERATION AND BELLOW FAILURE PRESSURE SWITCH

SYSTEM: 02

ELEM DIAG - 125 VDC CKTS - SOV
A.D.S. DEPRESS. VV'S 02SOV-71H & J
JAMES A. FITZPATRICK NUCLEAR PWR. ST.
POWER AUTHORITY OF THE STATE OF N.Y.
STONE & WEBSTER ENGINEERING CORPORATION
11825-ESK-11AAD

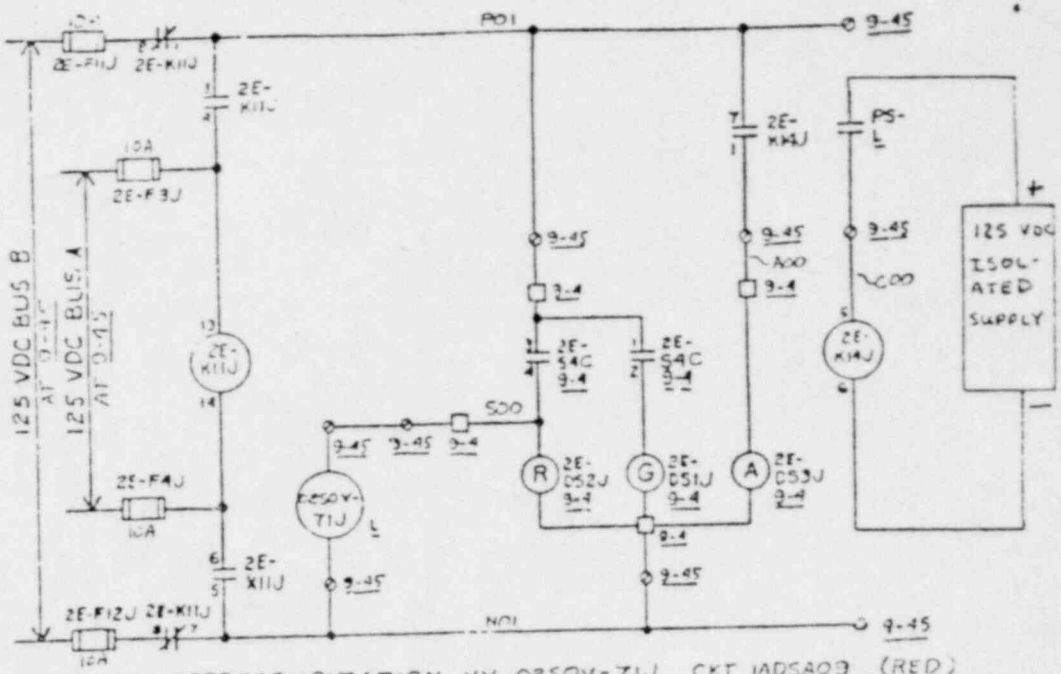

MANUAL DEPRESSURIZATION VV 02SOV-71J CKT 1ADSA03 (RED)

NOTES

1. APPLICABLE LOGIC DIAG. GE DWG. 730E149BA
2. ALL EQUIP. LOCATED IN GE RELAY CABINET 9-45 UNLESS OTHERWISE NOTED.
3. PRESSURE SWITCHES PS-LB CLOSE ON PRESSURE INCREASE AT VALVE BELLOWS.
4. —□— TERMINAL IN GE CONTROL BOARD.
5. —○— TERMINAL IN GE RELAY CABINET.
6. REFER TO GE ELEM. DIAG. 731E453 FOR RELAY AND CONTROL SWITCH CONTACT DEVELOPMENT.

FIGURE 2: PROPOSED TEMPORARY POWER SUPPLY FOR BELLOWS FAILURE CIRCUITRY

SYSTEM: 02

ELEM DIAG - 125 VDC CKTS - SOV
A.D.S. DEPRESS. VV'S 02SOV-71H & J
JAMES A. FITZPATRICK NUCLEAR PWR
POWER AUTHORITY OF THE STATE OF
STONE & WEBSTER ENGINEERING CORPORATION

11825-ESK-11A