ENCLOSURE "C"

Letter from R. F. Fraley, ACRS to Lee V. Gossick

7904120378

UNITED STATES
NUCLEAR REGULATORY COMMISSION
ADVISORY COMMITTEE ON REACTOR SAFEGUARDS
WASHINGTON, D. C. 20555

September 13, 1977

Lee V. Gossick
Executive Director for
Operations

PROPOSED REVISION OF 10 CFR PART 50, APPENDIX K

During its 209th meeting the Committee discussed with the NRC Staff four possible alternatives with respect to proposed changes in Appendix K. The Committee concluded, as reflected in the transcript at this meeting, that it endorses Alternate 1 at this time.

The ACRS Subcommittee on ECCS will continue to work with the NRC Staff, both in Reactor Regulation and in Safety Research, in their efforts to develop methods for quantifying safety margins which exist in Appendix K and for preserving safety margins taking into account new results which reduce the uncertainties in the data bases. The ACRS Subcommittee will report back to the Committee at an appropriate time (approximately 6-8 months).

R. F. Fraley
Executive Director

cc:
R. Boyd, DPM
E. G. Case, NRR
S. Levine, RES
R. Mattson, DSS
D. Ross, DSS

Enclosure "C"

ENCLOSURE "D"

Action Plan for ECCS Rule Change

Enclosure D

ACTION PLAN FOR ECCS RULE CHANGE

A. Procedure-Oriented Rule Change Requests

The NRR staff will begin immediate development of a rule change request to have SD initiate rulemaking for the areas discussed below:

1. Reanalysis Requirements

a. Reanalysis Requirements for Construction Permit Applications

Changes to 10 CFR 50.34 would allow for certain corrections, additions, or deletions to be made to vendor ECCS computer analysis codes during the CP review without a complete reanalysis of ECCS performance in compliance with 10 CFR 50.34 until the OL review. Criteria would be provided to define the bounds within which the corrections, additions, or deletions could be accepted without reanalysis.

b. Reanalysis Requirements for Operating License Applications and Licensed Plants

The changes to 10 CFR 50.34 would not require ECCS performance recalculations in the event of additions, deletions, or corrections to vendor ECCS computer analysis codes if it is demonstrated, on a generic basis, that the changes

clearly result in a more conservative analysis (to all plants affected).

2. Return to Nucleate Boiling

The rule change request would propose to allow the return to nucleate boiling during the blowdown phase of the LOCA when supported by applicable data. A request for this change to the steady state CHF model to the rule was initiated previously by the staff and a draft rule change was developed. The activity is presently on hold pending resolution of the current more general ECCS rule change action. This change would involve modifications to 10 CFR 50 Appendix K, part I(c)(4)(e).

3. Steam Cooling Requirements for Flooding Rates Below One Inch Per Second

The rule change request would delete the requirement (App. K, pt. I(d)(5)) that heat transfer calculations be based on the assumption that cooling is only by steam for flooding rates below one inch per second, and replace it with a requirement that heat transfer calculatons be based on now existing applicable experimental data with appropriate account of flow blockage if it is predicted to occur.

Items 2 and 3 above constitute technical changes to the present rule. However, experience strongly indicates that these changes will not significantly affect the overall conservatism of the rule.

Therefore these changes are to be considered along with the procedural changes. Nevertheless, an assessment to show that they do not significantly affect the overall conservatism of the rule will be made as a part of the rule change request.

The estimated time required to prepare the procedural rule change request from NRR to SD is 6 months. An additional 12 to 18 months is estimated to complete the rulemaking process. The estimated total manpower is 1 to 1-1/2 man-years, provided no public rulemaking hearing is required.

There is considerable value and only slight impact in proceeding with this limited initial rulemaking for procedural changes. For example, in the last year, the three PWR vendors were required to perform approximately 50 ECCS reanalyses to comply with the requirements to 10 CFR 50.34. While all of these recalculations may not have been eliminated had this procedure-oriented change been made, we know that the resources expended on only two of these recalculations are approximately equivalent to the costs involved in changing the rule to eliminate the need for much reanalysis.

B. Rule Change Requests Based On New Information From Research and Experience

A request for certain changes to the ECCS rule based on new information from research and experience will be initiated by NRR with input from RES.

In the period since the promulgation of the present ECCS Rule, a number of technical developments have taken place that provide new information and insight into the course of a postulated LOCA and the performance of ECCS. Some of the new information shows that the present ECCS Rule is more conservative than the earlier record supported. Examples are decay heat and metal/water reaction rate. Other new information shows the present ECCS Rule is less conservative than the earlier record supported. Examples are (1) the delay of emergency coolant injection caused by heat transfer to the coolant from hot walls, and (2) less favorable distribution of core spray coolant.

This rule change request will primarily address the proposed incorporation of new information into the ECCS rule. Included will be new research information on fission product decay heat and zirconium-water reaction. An assessment of the impact of these changes on the overall conservatism of the rule shall be made as a part of the justification for the rule change request. Included in the impact assessment will

be a reassessment of the requirements presently specified in Appendix K in light of current information as well as consideration of other phenomena of importance to ECCS performance that have been identified since the promulgation of Appendix K (e.g., new semiscale and LOFT test results, steam generator tube ruptures, countercurrent flow phenomena, BWR core spray distribution). If, in the course of this assessment, any phenomena significant to ECCS performance are identified which are considered to be inadequately treated in the present Appendix K rule or licensing practices, then an appropriate rule change request will be initiated.

The degree of conservatism that the proposed rule changes will apply to the new research data will be based on providing an adequate margin of safety as determined from the impact assessment. For example, if it is shown that the use of nominal new decay heat data in a licensing ECC calculation reduces the safety margin below that which is acceptable, then either decay heat rates greater than nominal will be proposed such that an acceptable safety margin is maintained, or appropriate conservatisms will be provided by other means. In any event, a sufficient overall margin of safety consistent with the intent of the 1973 Commission Opinion will be provided.

Expected areas of change in the present rule to incorporate certain new research results are described as follows:

1. Fission Product Decay Heat Rate

This proposed rule change would involve changing of paragraph (I)(A)(4) of Appendix K to 10 CFR 50 from 1.2 times the October 1971 ANS Proposed Standard, for example, to another specified decay heat rate consistent with present knowledge and needed conservatism.

2. Zircaloy Oxidation Rate

This proposed rule change would involve changing of paragraph (I)(A)(5) of Appendix K to 10 CFR 50 from Baker-Just Equation of May 1962 to, for example, another correlation based on present knowledge and needed conservatism. In addition, the requirement that "the calculated total oxidation of the cladding shall nowhere exceed 0.17 times the total cladding thickness before oxidation" will also be examined to assure consistancy with the new zircaloy oxidation data, and appropriate changes, if any, will be requested.

3. Experience

The rule change request may include changes to the ECCS rule needed to account for phemonema not specifically identified at the time of rule promulgation but have since been shown to have a significant effect on ECCS performance. Such changes, if needed, will be identified during the impact assessment.

The NRR staff will initiate work on the further development of methodology for assessing the impact of proposed technical changes on the overall conservatism of the Appendix K rule.

Consistent with the recommendation of the ACRS ECCS Subcommittee in their report to the ACRS Full Committee on September 9, 1977, the staff intends to work closely with the ECCS Subcommittee on the development of this methodology, providing periodic opportunity for technical discussions of the methods being developed.

It is expected that this assessment methodology will follow the approach recommended by the staff in Enclosure "C" of the July 1, 1977 information report to the Commission from E. G. Case, "Staff Progress on Proposed Action Plan for Modifying 10 CFR 50.46 and Appendix K to 10 CFR 50: Alternatives for Changes" (SECY-77-368), supplemented with analyses if necessary.

This methodology provides for a systematic presentation of the conservatisms in more definitive catagories such that conservatisms that arise from data uncertainties are distinguished from fixed conservatisms intended to make the overall analysis "retain a margin of safety above and beyond allowances for statistical error."* Phenomena, models, and/or data which affect ECCS performance that are specified in the present ECCS rule will be reviewed to assure

---

*Commission Opinion, Page 1094.

their treatment is consistent with today's knowledge. Other phenomena not specifically identified at the time of rule promulgation but that have since been shown to have a significant effect on ECCS performance will also be considered in the assessment as well as for possible areas of rule change.

The assessment of the impact of the rule change on the overall conservatism of the rule will be an integral part of NRR's technical rule change request to SD.

Preparation of the rule change request and assessment of impact of proposed changes on the overall conservatism of the rule is expected to take approximately 18 months. Completion of the rulemaking process is expected to take an additional 18 to 24 months. The total manpower required is approximately 3 to 3-1/2 man-years, provided no public rulemaking hearing is required.

Modification of Appendix K to 10 CFR 50 would allow new technical information available as the result of research to be taken into account in the licensing process. In addition, a methodology for assessing the impact of rule changes on the overall rule conservatism will have been developed, and would allow impact assessments of future changes to the rule to be made at reduced manpower requirements and costs.

Finally, there are potential economic benefits regarding nuclear power generation that could be realized.

These benefits are considered to far outweigh the time, efforts and costs necessary to develop and process the rule change, including those necessary if a rulemaking hearing is required for the technical changes.

ENCLOSURE "E"

Response to OPE Comments

Enclosure E

Response to OPE Comments

Comment No. 1

While the staff has responded to the comments of Glenn G. Sherwood (of General Electric) concerning the legality of allowing flexibility in the interpretation of the rule, it has not responded to the AIF arguments as presented in paragraph 3 of the August 22, 1977 AIF letter.

Response:

The AIF letter was received on August 22, 1977, at which time the staff was formulating its recommendation to the Commission on alternatives for rule change.

It was decided at that time that the response to the AIF letter should reflect the decision of the Commission on the recommended action plan. The response would therefore provide a means of advising the industry, in general, of our plans in this matter. It was felt that a response to the AIF letter prior to a Commission decision could not provide definitive information, such as an action plan, regarding the suggestions forwarded in the letter.

Mr. Ward of the AIF was orally advised of our intent to respond to his letter subsequent to a Commission decision shortly after his letter was received.

Comment No. 2

There seems to be general agreement between industry, the staff, and the ACRS concerning the need to develop methods for quantifying safety margins. There is a need, however, to improve the understanding by all parties involved as to the meaning of the various terms used throughout the paper (e.g., "acceptable safety margin", "degree of conservatism", "sufficient overall margin of safety", etc.). For example, are these terms meant to be interchangeable or are there significant differences between them"? To what degree do these terms imply a quantitative notion of risk? In this regard, as quoted by the staff ("retain a margin of safety above and beyond allowances for statistical error"), the Commission appears to have made an effort toward more precise expression.

Response:

The use of the various terminology such as "sufficient overall margin of safety", "acceptable safety margin" are not meant to imply a quantitative notion of risk. Rather, they are interchangeably used to describe qualitative criteria which will be quantitatively determined as part of the overall assessment of conservatism.

Comment No. 3

The staff states on page 3 of Enclosure D, that "there is considerable value and only slight impact in proceeding with this limited initial rulemaking for procedural changes". An example cited by the staff indicates that last year alone there were 50 cases of ECCS reanalyses to comply with the requirements of 10 CFR 50.34 and the resource

expenditure for only two of these reanalyses would be equivalent to the costs involved in changing the rule. In view of the potential savings the staff ought to address why it takes so long to complete the rule change and why the manpower devoted to this task appears to be so small (i.e., the staff estimates the manpower expenditure to be between 1 to 1-1/2 man-years over a period of 1-1/2 to 2 years.)

Response:

This is a valid comment and reflects one of the characteristics arising from the procedural restraints involved in the rulemaking. The procedural-type rule change referenced in the comment is believed to be technically straight forward and to have no appreciable impact on the overall conservatism of the ECCS rule. For this reason, the staff resources required to implement this rulemaking are estimated to be small (i.e., 1 to 1-1/2 man-years). However, the time required to process this rulemaking action is not correspondingly short. The principal reason for the long time period is the extensive review process (both inhouse and public) undertaken in a rulemaking action. This process is shown schematically on the attached Regulation Sample Network which outlines the typical steps taken after a rule change request has been made.

Past experience has shown that implementation of this network for a typical rulemaking action takes approximately 30 months. For the

proposed procedural-type rule change this procedure will be shortened as much as possible. (A first cut attempt to shorten the schedule is shown on the sample network. The total time for the accelerated schedule is about 85 weeks.) It is unrealistic to plan for a shorter time than the 1-1/2 to 2 years estimated.

TYPICAL SCHEDULE ~ 60 WKS.

ACCELERATED SCHEDULE ~ (38) WKS.

REGULATION - PAGE 1 TASK NO:

SAMPLE NETWORK

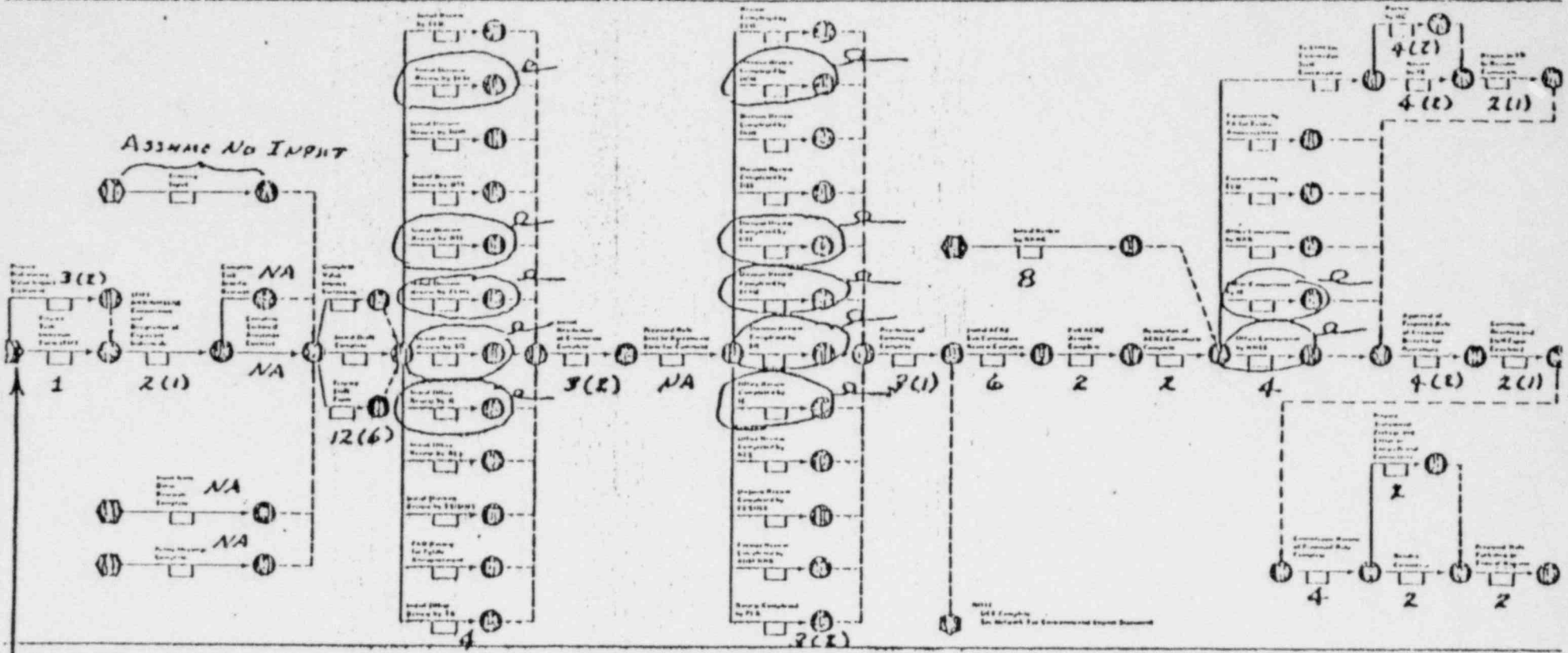

BRANCH CHIEF TASK LEADER CONGNIZANT INDIVIDUALS EXISTING DPM ___ TEMS ___ DSS ___ HES ___ DSE ___ SO ___ DOR ___ IE ___	RELATED CONTRACTS: TASK PRIORITY: ___ MPC ANALYST: ___	SCOPE OF REGULATION:	REVIEWED BY IE: ___ REVIEWED BY BC: ___	STATUS AS OF:	POTENTIAL PROBLEMS:	TASK VALIDATION: REQUESTOR: ___ DATE REQUESTED: ___ DATE NEEDED: ___ ORIGINAL SCHEDULE: START: ___ COMPLETE: ___

NOTE: IT IS ESTIMATED THAT APPROXIMATELY 6 MONTHS TIME WILL BE NEEDED TO PREPARE THE RULE CHANGE REQUEST FOR THE PROCEDURE-TYPE RULE CHANGE

TYPICAL SCHEDULE ~ 61 WKS.

ACCELERATED SCHEDULE ~ (47) WKS.

REGULATION - PAGE 2 TASK NO: SAMPLE NETWORK

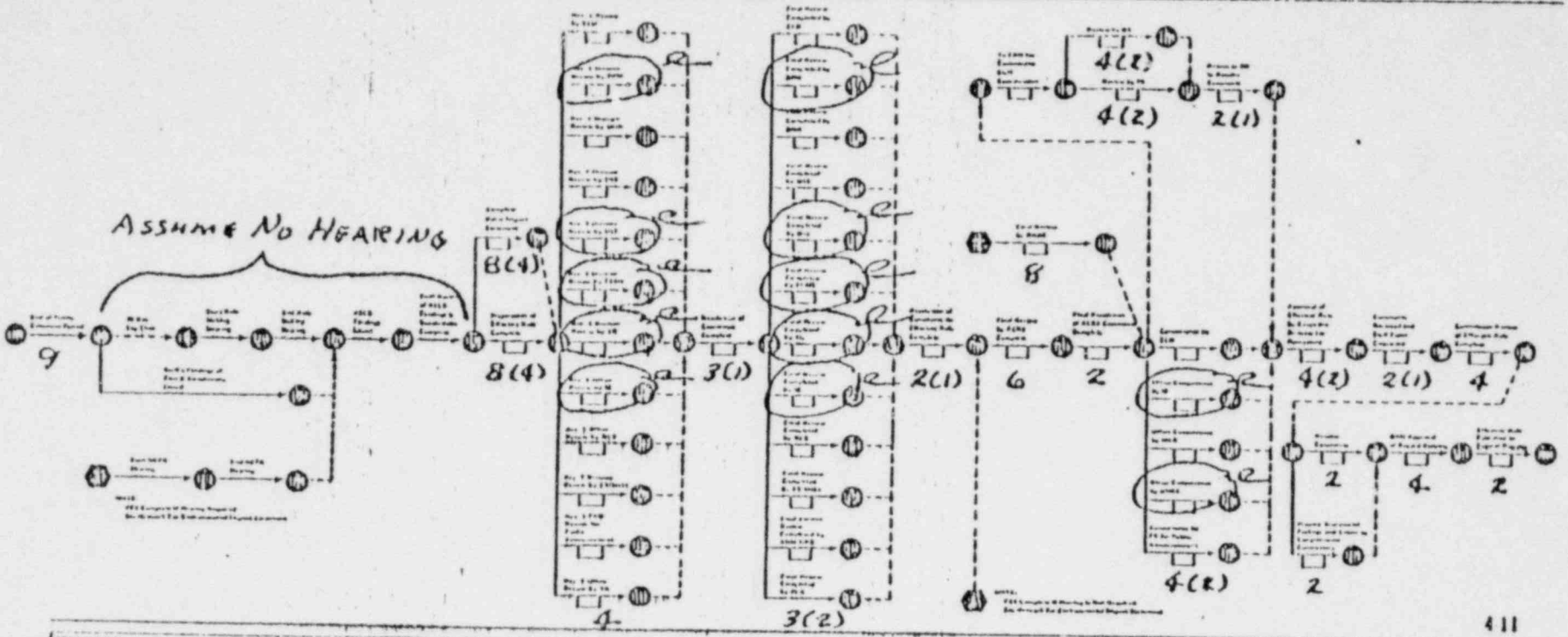

TOTAL TIME FOR TYPICAL SCHEDULE ~ 121 WKS ≙ 30 MONTHS

TOTAL TIME FOR ACCELERATED SCHEDULE ~ (85) WKS ≙ 21 MONTHS

(NOTE: THE ABOVE TIME IS IN ADDITION TO THE TIME REQUIRED TO PREPARE THE RULE CHANGE REQUEST)