Omaha Public Power District

1623 HARNEY • OMAHA, NEBRASKA 68102 • TELEPHONE 536-4000 AREA CODE 402

June 14, 1979

Director of Nuclear Reactor Regulation
ATTN: Mr. Robert W. Reid, Chief
Operating Reactors Branch No. 4
U. S. Nuclear Regulatory Commission
Washington, D. C. 20555

Reference: Docket No. 50-285

Gentlemen:

The Omaha Public Power District received a telecopy from a member of your staff on April 26, 1978, requesting information in regard to radiation doses delivered through the Fort Calhoun Station equipment hatch during normal operation and after a LOCA. In 1978, the District performed radiation surveys outside of the containment vessel in order to evaluate the Commission's concerns. Detailed responses to the questions posed by the telecopy are attached.

Sincerely,

for T. E. Short
Assistant General Manager

TES/KJM/BJH:jmm

Attach.

cc: LeBoeuf, Lamb, Leiby & MacRae
1333 New Hampshire Avenue
Suite 1100
Washington, D. C. 20036

2215 031

A001
S
1/1

[redacted]

7906250288 P

Q-1:

Demonstrate that the non-installation of the removable concrete block shield in the containment equipment hatch will not result in post-LOCA exposures in excess of the 10 CFR Part 100 guidelines at the exclusion area boundary considering the cloud dose contribution, the gamma shine/skyshine dose contribution, and any neutron dose contribution from a Regulatory Guide 1.4 source term Because of the complexity of the geometry, the post-LOCA gamma ray shine/skyshine dose contribution should be determined using detailed transport calculations.

Response

An accident analysis evaluating the shielding effectiveness of the equipment hatch without additional shielding during an MHA was performed by the District in 1976. The following conservative assumptions were used for dose evaluations at the exclusion area boundary:

(1) The reactor was operating at full power prior to MHA.

(2) It was assumed that a receptor was standing at the exclusion area boundary and was exposed to radiation streaming through the equipment hatch opening.

(3) No credit was taken for the steel door in front of the equipment hatch.

(4) Credit was taken for a concrete wall (two feet thick and built of ordinary concrete with density of 2.35 gm/cc) in front of the equipment hatch opening.

(5) The assumptions related to the release of radioactive material from the fuel and containment were derived from Regulatory Guide 1.4.

[redacted]

(6) The dose rates specified in 10 CFR Part 100 were used as acceptance criteria.

The analysis demonstrated that the cumulative dose, due to radiation from the containment, at the exclusion boundary represents approximately 4% of the doses specified in 10 CFR Part 100. We believe that the parameters utilized for the accident analysis are still valid and are very conservative. It should be pointed out that the methodology used for the above referenced accident analysis was derived from the following references:

1. Reactor Shielding for Nuclear Engineers, N. M. Schaeffer (Editor), TID-25951.
2. Calculation of Distance Factors for Lower and Test Reactor Sites, DiNunno, et al, TID-14844.

Therefore, in light of the following factors, we believe that the requirements for any additional shielding in front of the equipment hatch are not warranted:

(a) conservative assumptions used for the above referenced accident analysis;

(b) the resultant doses are a small fraction of 10 CFR Part 100; and

(c) dose equivalent rates (see response to Q-2) during normal operation are ALARA.

Q-2:

Demonstrate that, within the exclusion area, the dose rates due to neutrons streaming through the equipment hatch opening during normal operation are as low as is reasonably achievable (ALARA). As this is an operating facility, provide neutron dose equivalent rate measurement during normal operation in the unshielded radiation zone outside containment as "best evidence" to support your ALARA conclusions. Provide the details of the monitoring program used to make these measurements including instrumentation used, sensitivity, and monitor location.

Response

First of all, it is necessary to reiterate the District's policy regarding the radiation designation of the equipment hatch area. The area immediately outside the equipment hatch door is enclosed as part of the auxiliary building. This enclosed area is locked when not in use and is rarely occupied. This enclosed area is designated a radiation area with dose rates, due to neutrons and gammas, ranging from 4 to 11 mrem/hr at the surface of the equipment hatch door and dose rates, due to neutron and gammas, less than 1 mrem/hr in the truck dock area. These are the dose rates when the reactor is at 100% power. When the reactor is shut down, this area can be designated as Zone 1 Uncontrolled due to the low radiation.

Radiation Survey Program

A radiation survey of the equipment hatch area was conducted in August 1978 in order to determine the dose rates due to neutrons streaming through the equipment hatch opening during normal operation. Further details of the survey program are delineated as follows:

The plan view of the area in question is shown in Figure 1. Four cross sectional views of the in-containment equipment hatch door, outside containment equipment hatch door, inside auxiliary building wall and, outside auxiliary building wall are shown in Figures 2, 3, 4, and 5, respectively. TLD (Thermoluminescence Dosimeter) test badges were placed on each of the above defined walls (cross sectional views) from August 3 through August 10, 1978 while the plant was operating at 100% of power level. Five TLD badges were placed on the in-containment equipment hatch door at specific grid points as shown in Figure 2. Twenty-one TLD badges were placed on the outside containment equipment hatch door as shown in Figure 3. Seventy-two TLD badges were placed on the inside auxiliary building wall as shown by Figure 4. Fifty-four TLD badges were placed on the outside auxiliary building wall as shown in Figure 5.

Results of the measurement data regarding the neutron dose equivalent rates are presented in Table 1 for each of the four groups. As it is obvious from the results that the dose equivalent rates, primarily from neutrons streaming through the equipment hatch opening, in the equipment hatch area are small; i.e., in the range of 0.2 mrem/hr to 0.4 mrem/hr as compared to the neutron dose equivalent rates in the containment. The confidence level in these dose rates can be enhanced by comparing with monthly TLD exposure results, taken during the months of September 1978 and October 1978, which indicated that the neutron dose equivalent rates were between 0.2 mrem/hr and 0.6 mrem/hr. The radiation survey program also indicated that the dose equivalent rates from neutrons and gammas,

in the equipment hatch area, were between 0.3 mrem/hr and 0.8 mrem/hr.

As 1) the dose rates in the equipment hatch area are small, 2) the area is designated a radiation area, and 3) the District's operating philosophy conforms with Regulatory Guide 8.10; the dose rates in the equipment hatch area, during normal operation are considered to be ALARA.

Type of Instrumentation

The instrumentation (TLD badges) used for determining the neutron dose equivalent rates in the equipment hatch area is of standard geometry furnished by the Harshaw Chemical Company. Figure 6 shows the neutron TLD badge, which contains one G-7 card and one N-6 card. The model G-7 cards contain two TLD-700 chips (99.99% Lithium-7) and the Model N-6 cards contain two TLD-600 chips (95.6% Lithium-6). Both types of cards utilize a teflon window to hold the TLD chips and both have the American Standard Information Interchange.

EQUIPMENT HATCH AREA
(PLAN VIEW)

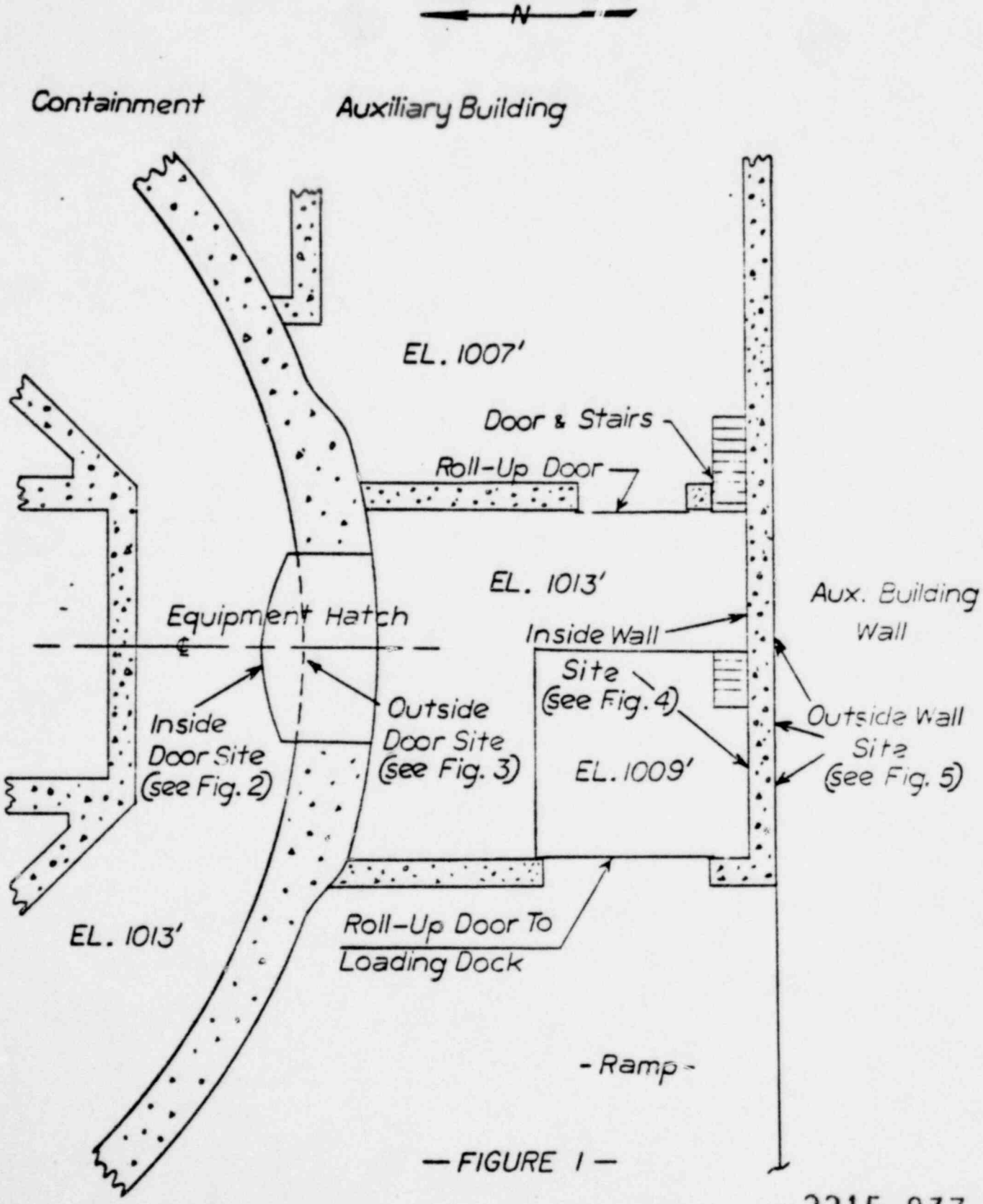

— FIGURE 1 —

2215 037

EQUIPMENT HATCH DOOR

Inside Containment – Looking South

E ⟷ W

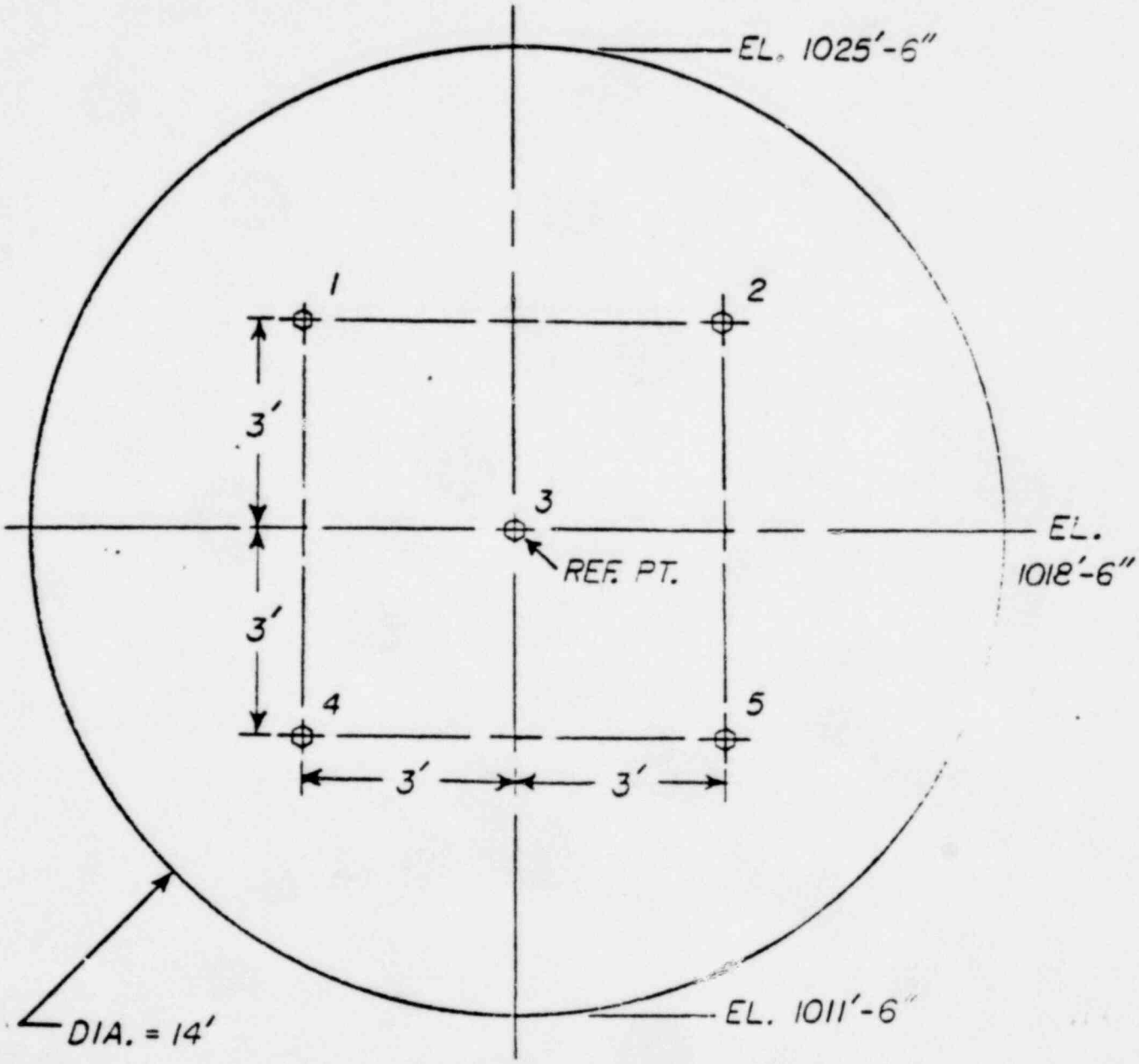

2215 038

—FIGURE 2—

EQUIPMENT HATCH DOOR

Outside Containment – Looking North

W ⟵⟶ E

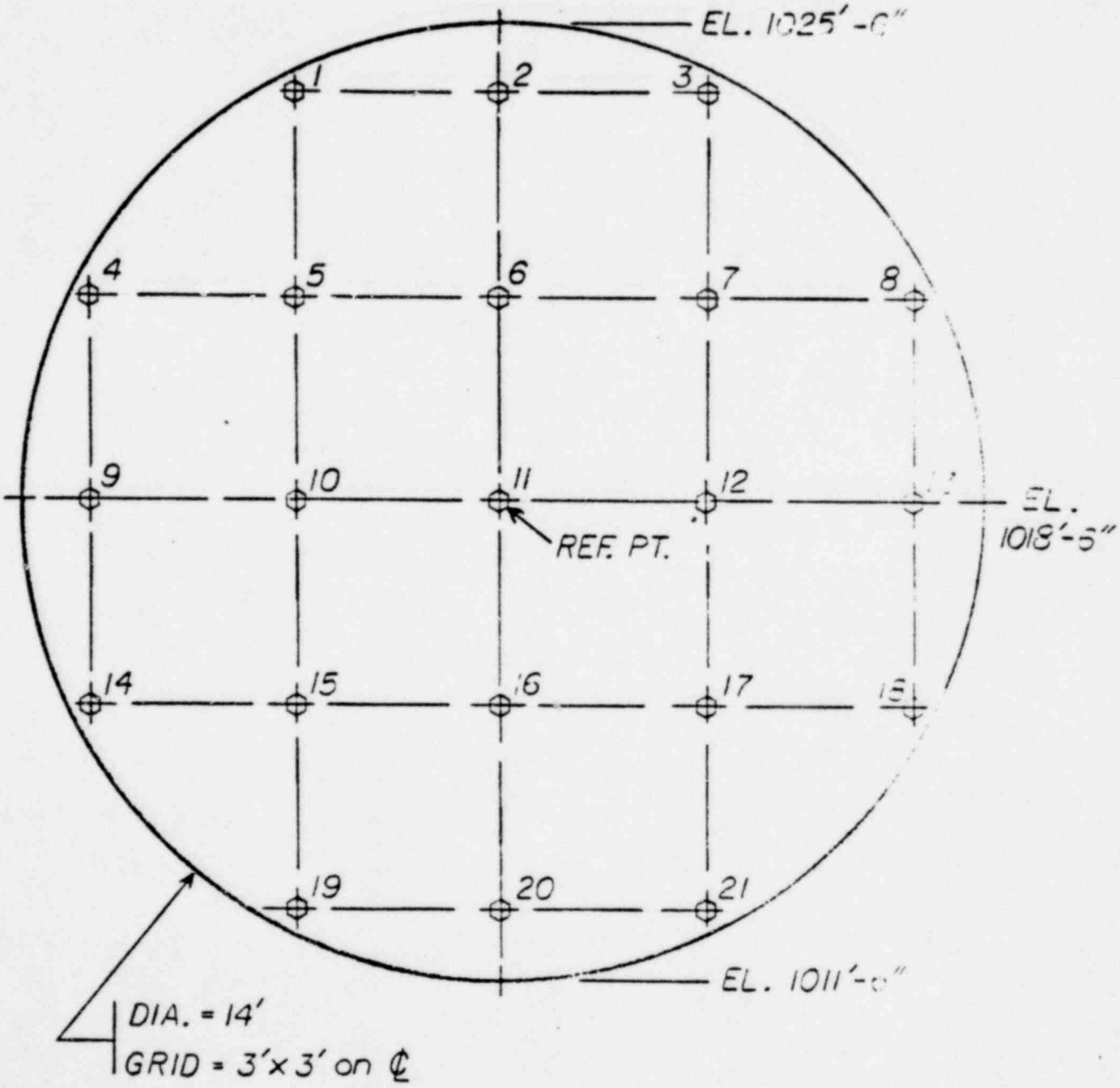

2215 039

— FIGURE 3 —

AUXILIARY BUILDING WALL

Inside wall – Looking South

E ⟷ W

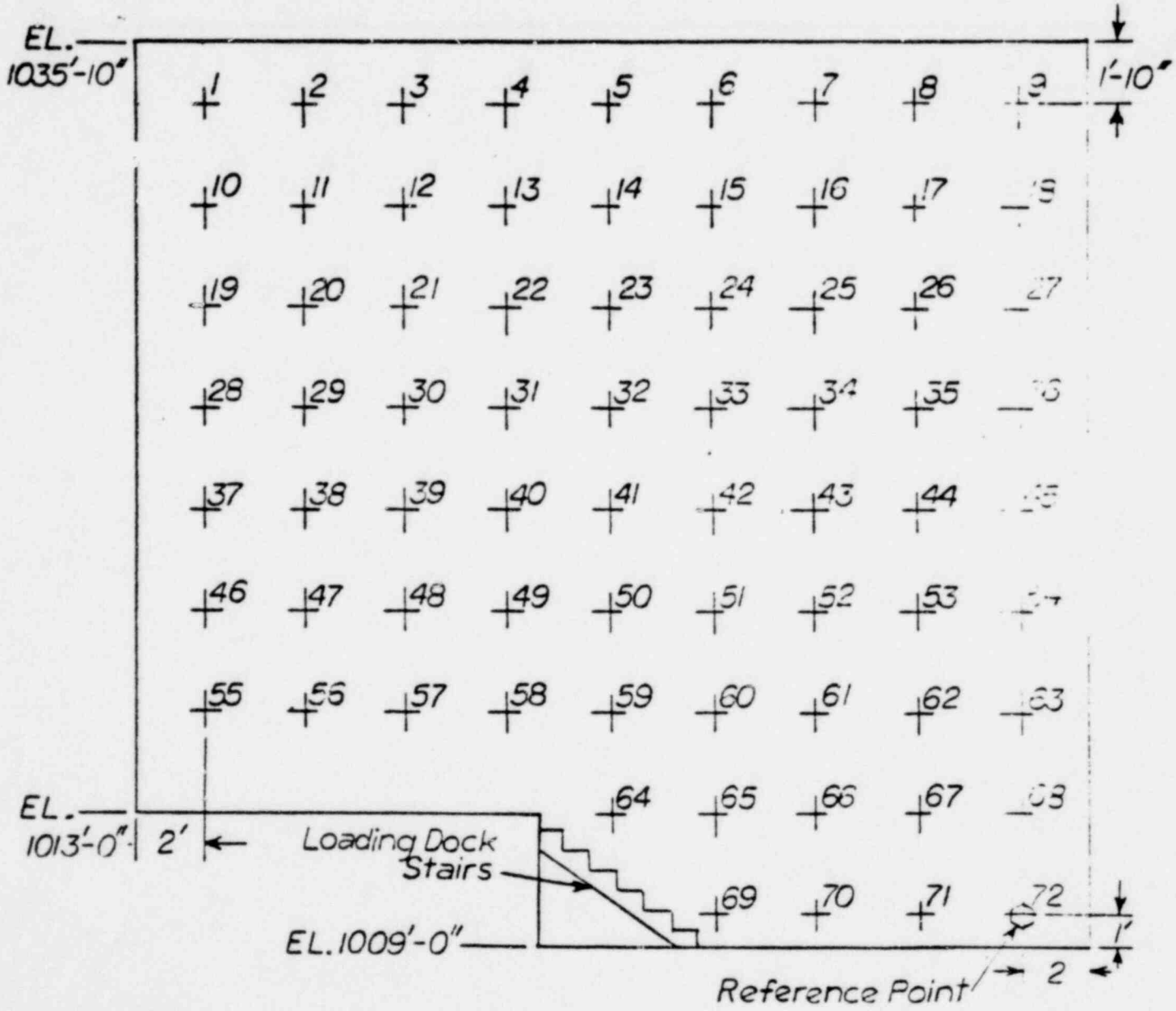

GRID = 3'×3'

2215 040

—FIGURE 4—

AUXILIARY BUILDING WALL

Outside Wall – Looking North

W ⟷ E

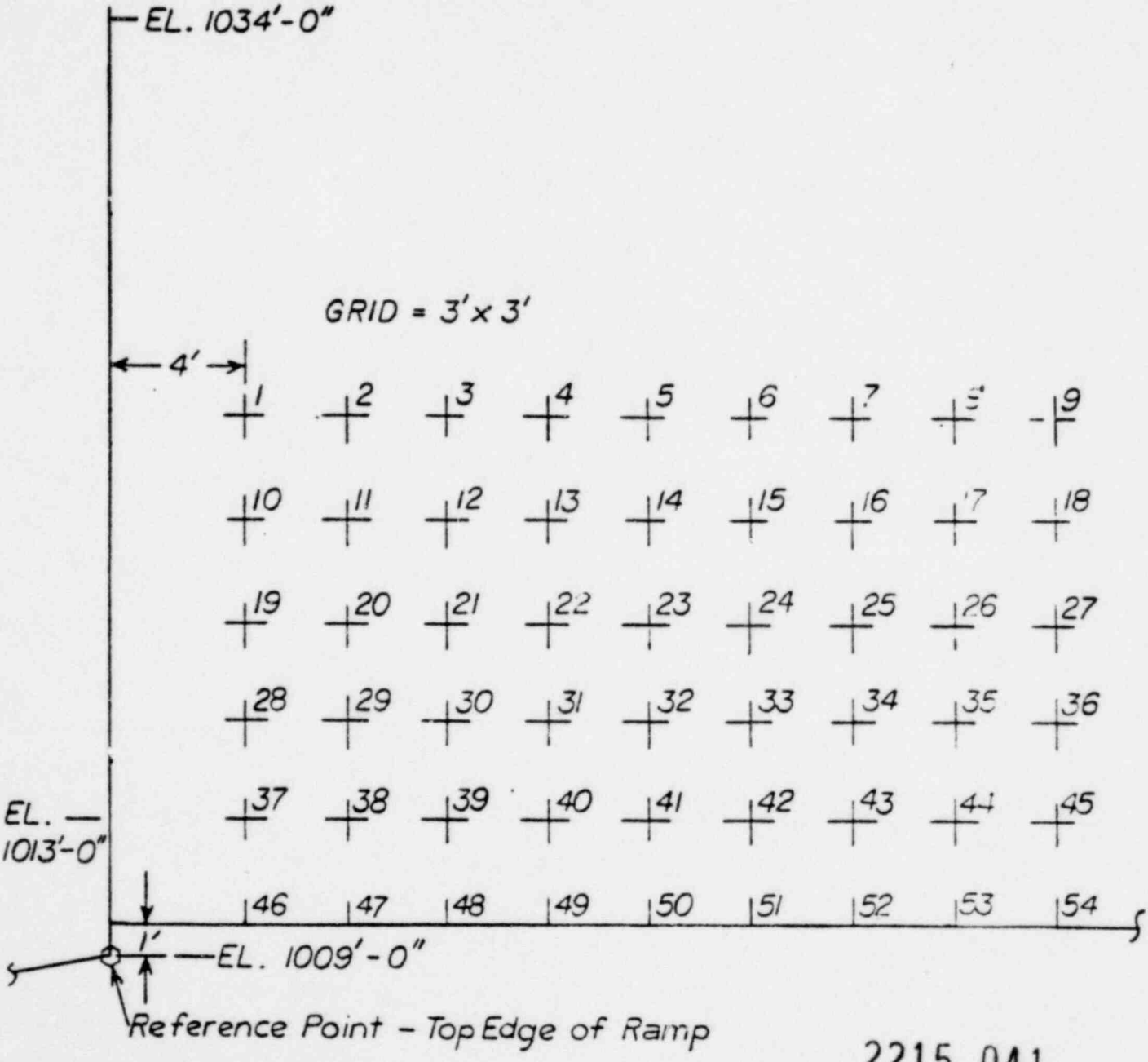

2215 041

—FIGURE 5—

TABLE 1. NEUTRON DOSE EQUIVALENT RATES

Below are the readings of the test badges that were placed at the Fort Calhoun Plant from August 3 through August 10, 1978.

Placement of the badges are as follows:

Group 1 - In containment equipment hatch door.

Group 2 - Outside containment equipment hatch door.

Group 3 - Inside auxiliary building wall.

Group 4 - Outside auxiliary building wall.

	Badge	Neutron Dose Rates (mrem/hr)
Group 1	1	17.7
	2	17.2
	3	16.5
	4	14.4
	5	5.9
Group 2	1	6.6
	2	6.7
	3	6.7
	4	4.1
	5	5.2
	6.	5.6
	7	5.3
	8	5.1
	9	3.9
	10	0.1
	11	4.2

2215 042

	Badge	Neutron Dose Rate (mrem/hr)
	12	2.6
	13	3.0
	14	3.9
	15	2.3
	16	4.1
	17	3.9
	18	3.6
	19	2.6
	20	2.6
	21	3.6
Group 3	1	0.2
	2	0.2
	3	0.2
	4	0.2
	5	0.2
	10	0.1
	11	0.2
	12	0.2
	13	0.2
	14	0.1
	19	0.2
	20	0.1
	21	0.2
	22	0.2

2215 043

Badge	Neutron Dose Rate (mrem/hr)
23	0.2
24	0.2
25	0.2
26	0.2
27	0.2
28	0.2
29	0.4
30	0.2
31	0.3
32	0.3
33	0.2
34	0.2
35	0.2
36	0.2
37	0.2
38	0.3
39	0.2
40	0.0
41	0.4
42	0.3
43	0.3
44	0.2
45	0.0
46	0.2

2215 044

Badge	Neutron Dose Rate (mrem/hr)
47	0.3
48	0.2
49	0.2
50	0.3
51	0.3
52	0.2
53	0.2
54	0.2
55	0.2
56	0.3
57	0.3
58	0.3
59	0.3
60	0.2
61	0.2
62	0.2
63	0.2
64	0.2
65	0.3
66	0.2
67	0.2
68	0.2
69	0.2
70	0.2

2215 045

	Badge	Neutron Dose Rate (mrem/hr)
	71	0.2
	72	0.2
Group 4	1	0
	2	0
	3	0
	4	0
	5	0
	6	0
	7	0
	8	0
	9	0
	10	0
	11	0
	12	0
	13	0
	14	0
	15	0
	16	0
	17	0
	18	0
	19	0
	20	0
	21	0
	22	0

2215 046

Badge	Neutron Dose Rate (mrem/hr)
23	0
24	0
25	0
26	0
27	0
28	0
29	0
30	0
31	0
32	0
33	0
34	0
35	0
36	0
37	0
38	0
39	0
40	0
41	0
42	0
43	0
44	0
45	0
46	0

2215 047

Badge	Neutron Dose Rate (mrem/hr)
47	0
48	0
49	0
50	0
51	0
52	0
53	0
54	0

2215 048

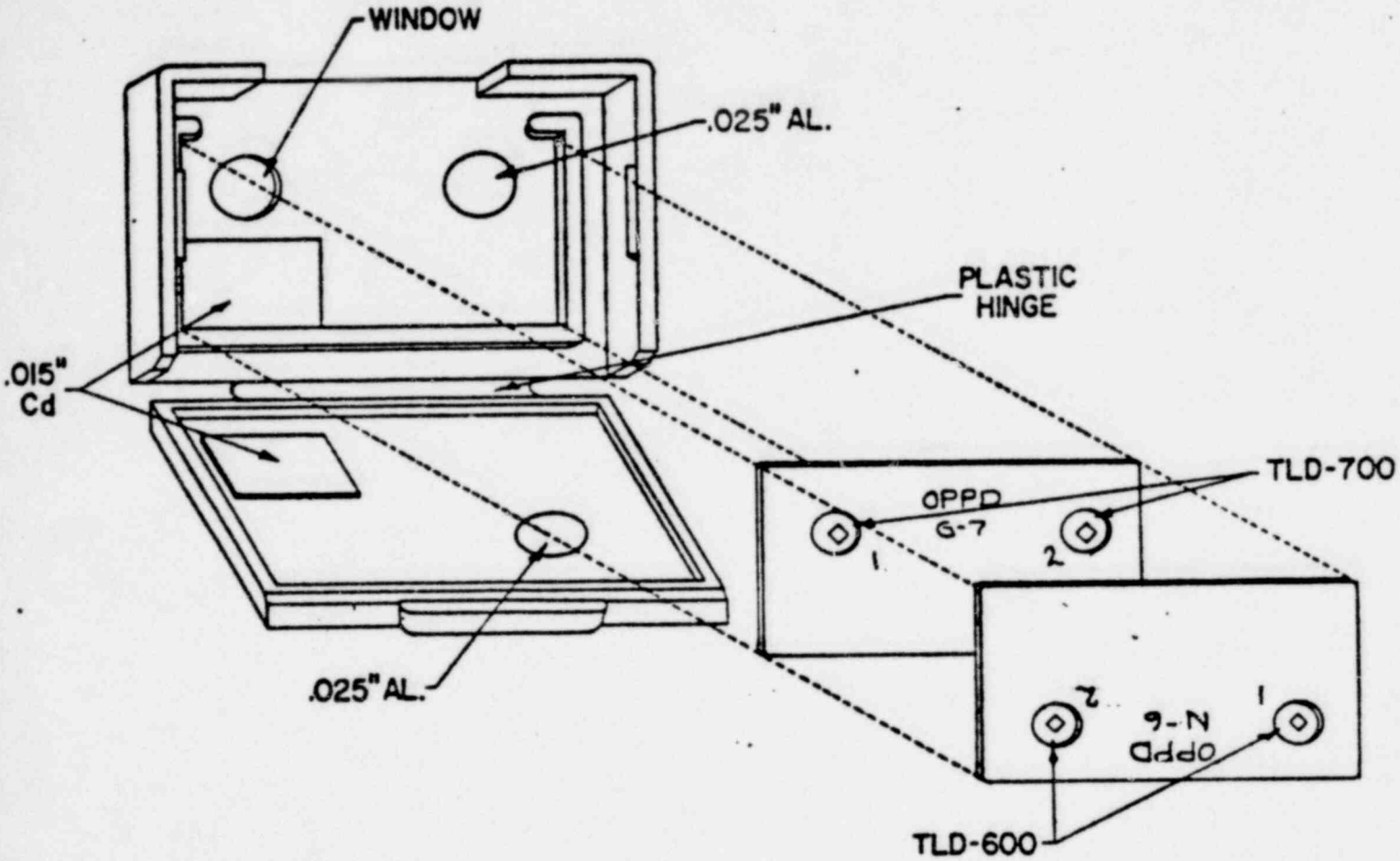

Figure 6. Neutron TLD Badge

2215 049

Code (ASCII) identification matrix.

Chip No. 1 (G-7) measures gamma and beta radiation with energies greater than that which will just penetrate the teflon window of 13.5 mg/cm^2. Chip No. 2 (G-7) is covered front and back by aluminum shields 0.25 inches thick (0.064 cm, 170 mg/cm^2), and as a consequence is shielded from all beta radiation up to about 0.6 Mev. Thus, Chip No. 2 (G-7) measures only gamma radiation and beta particles with energies greater than about 0.6 Mev. The reading of Chip No. 2 (G-7) is taken to be a measure of the gamma radiation dose, and the reading of Chip No. 1 (G-7) minus the reading of Chip No. 2 (G-7) is taken to be a measure of the beta radiation dose.

Chip No. 1 of the N-6 card receives neutrons, both slow and fast, and also gamma radiation. Chip No. 2 (N-6) receives no slow neutrons because all slow neutrons are stopped by the 0.015-inch (0.038 cm) cadmium shields which cover Chip No. 2 (N-6) front and back. Thus, Chip No. 2 (N-6) receives only fast neutrons and gamma radiation.

Slow Neutron Sensitivity Determination

1) For the purpose of the neutron sensitivity determination, a TLD badge with TLD-600 (enriched in Li^6) on one side and TLD-700 (enriched in Li^7) on the other side is placed in the lucite jig and irradiated for a predetermined time. TLD-600 has high sensitivity for thermal neutrons (σ = 980b) whereas TLD-700 is insensitive to neutrons (σ = 0.033b) and is used here as a γ-ray monitor.

2) The irradiation of a similar neutron badge is done in the same manner and for the same time, except that both sides are covered with cadmium.

3) The badges are read out with a -calibrated reader in the usual manner.

4) The neutron response R (in units of nanocoulombs) of a badge is obtained as $R = R_6 - R_7$; Where:

R_{6b}, R_{6c} are the bare and covered TLD-600 responses, resp.

R_{7b}, R_{7c} are the bare and covered TLD-700 responses, resp.

5) The slow neutron response R_s is given by the difference between the bare response R_b and the cadmium-covered response, R_c, as

$$R_b = R_{6b} - R_{7b}$$

$$R_c = R_{6c} - R_{7c}$$

$$R_s = R_b - R_c$$

6) The sensitivity S_n of TLD-600 is determined by,

$$S_n = \frac{R_s}{D_n}$$

Where:

D_n is the slow neutron dose in mrem.

D_n is found from the TLD irradiation time T and the slow neutron flux F_s according to:
$D_n = F_s T/(10^9\ n/cm^2/rem)$

$10^9\ n/cm^2$ per rem is the fluence-dose conversion factor for neutrons of thermal energy up to about 10 KeV.

Fast Neutron Sensitivity Determination

In order to determine the TLD sensitivity for other than slow neutron energies, TLDs must be given known neutron doses at several discrete, or average neutron energies. To find the fast neutron sensitivity response,

neutron sources are chosen to cover a wide range of neutron energies in order to define the sensitivity response as a function of neutron energy. Such a response curve can then be used to obtain TLD neutron sensitivity at any desired neutron energy within the jurisdiction of the curve. The entire neutron sensitivity response S_n (E) can be modeled as:

$S_n = aE^b \sigma TOT^{(Li6)}$.

It is assumed that S_n follows the total neutron cross section of Li-6, σTOT, as a function of neutron energy E, and is proportional to it according to the weak energy dependence of aE^b, where a and b are constants which were determined empirically. This technique depends on determining an effective neutron energy for a multi-energy neutron spectrum. The sensitivity response function above is fitted using both absorbed doses (mrad) and equivalent doses (mrem) in determining Sn.

2215 052