Jera

UNITED STATES
NUCLEAR REGULATORY COMMISSION
WASHINGTON, D. C. 20555

October 22, 1979

Docket No. 50-285

Mr. W. C. Jones
Division Manager - Production Operations
Omaha Public Power District
1623 Harney Street
Omaha, Nebraska 68102

Dear Mr. Jones:

SUBJECT: NRC REQUIREMENTS FOR AUXILIARY FEEDWATER SYSTEMS AT FORT CALHOUN STATION UNIT NO. 1

The purpose of this letter is to advise you of our requirements for the auxiliary feedwater systems at the subject facility. These requirements were identified during the course of the NRR Bulletins and Orders Task Force review of operating reactors in light of the accident at Three Mile Island, Unit 2.

Enclosure 1 to this letter identifies each of the requirements applicable to the subject facility. These requirements are of two types, (1) generic requirements applicable to most Combustion Engineering-designed operating plants, and (2) plant-specific requirements applicable only to the subject facility. Enclosure 2 contains a generic request for additional information regarding auxiliary feedwater system flow requirements.

The designs and procedures of the subject facility should be evaluated against the applicable requirements specified in Enclosure 1 to determine the degree to which the facility currently conforms to these requirements. The results of this evaluation and an associated schedule and commitment for implementation of required changes or actions should be provided for NRC staff review within thirty days of receipt of this letter. Also, this schedule should indicate your date for submittal of information such as design changes, procedure changes or Technical Specification changes to be provided for staff review. You may also provide your response to the items in Enclosure 2 at that time.

In addition to the requirements identified in this letter, other requirements which may be applicable to the subject facility are expected to be generated by the Bulletins and Orders Task Force. Such requirements are those resulting from our review of the loss-of-feedwater event and the small break loss-of-coolant accident as described in the Combustion Engineering report CEN-114-P (Amendment 1-P)

1257 306

7911020063

P

entitled, "Review of Small Break Transients in Combustion Engineering Nuclear Steam Supply Systems." Our specific concerns include systems reliability (other than the auxiliary feedwater system), analyses, guidelines and procedures for operators, and operator training.

We plan to identify, in separate correspondence, the requirements resulting from the additional items from the Bulletins and Orders Task Force review.

Sincerely,

Darrell G. Eisenhut, Acting Director
Division of Operating Reactors
Office of Nuclear Reactor Regulation

Enclosures:
As stated

cc w/enclosures:
See next page

Omaha Public Power District

cc:
Margaret R. A. Paradis
LeBoeuf, Lamb, Leiby & MacRae
1333 New Hampshire Avenue. NW.
Washington, D. C. 20036

Blair Public Library
1665 Lincoln Street
Blair, Nebraska 68008

1257 308

Combustion Engineering Principal Contact Listing

Mr. David Bixel
Nuclear Licens.ng Admiistrator
Consumers Power Company
212 West Michigan Avenue
Jackson, Michigan 49201

Mr. William Cavanaugh, III
Executive Director of Generation
and Construction
Arkansas Power & Light Company
P. O. Box 551
Little Rock, Arkansas 72203

Mr. A. E. Lundvall, Jr.
Vice-President - Supply
Baltimire Gas & Electric Company
P. . Box 1475
Baltimore, Maryland 21203

Mr. Theodore E. Short
Assistant General Manager
Omaha Public Power District
1623 Harney Street
Omaha, Nebraska 68102

Mr. Robert H. Groce
Licensing Engineer
Yankee Atomic Electric Company
20 Turnpike Road
Westboro, Massachusetts 01581

Mr. W. G. Counsil, Vice-President
Nuclear Engineering & Operations
Northeast Nuclear Energy Company
P. O. Box 270
Hartford, Connecticut 06101

Dr. Robert E. Uhrig, Vice-President
Advanced Systems & Technology
Florida Power & Light Company
P. O. Box 529100
Miami, Florida 33152

1257 309

Combustion Engineering Owners Group Representatives

Mr. G. E. Liebler, Chairman
Combustion Engineering Owners Group
Florida Power and Light Company
P. O. Box 013100
Miami, Florida 33101

Mr. Joseph K. Gasper, Vice Chairman
Combustion Engineering Owners Group
Omaha Public Power District
Fourth & Jones
Omaha, Nebraska 68108

Mr. John Garrity, Chairman
Guidelines Subgroup
Maine Yankee Atomic Power Company
Edison Drive
Augusta, Maine 04336

Mr. Robert G. Harris, Chairman
Analysis Subgroup
Northeast Utilities Service Co.
P. O. Box 270
Hartford, Connecticut 06101

Mr. David S. Van de Walle
Consumers Power Company
212 West Michigan Avenue
Jackson, Michigan 49201

Mr. William Szymczak
Yankee Atomic Power Company
25 Research Drive
Westboro, Massachusetts 01581

Mr. J. T. Enos
Arkansas Power & Light Company
P. O. Box 551
Little Rock, Ar[illegible]

ENCLOSURE 1

X.3 (CE) FT. CALHOUN

AUXILIARY FEEDWATER SYSTEM

X.3.1 System Description

X.3.1.1 Configuration, Overall Design

A simplified diagram of the auxiliary feedwater system (AFWS) for the Ft. Calhoun plant is shown in Figure 1. The AFWS includes a steam turbine-driven pump and a motor-driven pump, each rated 260 gpm @ 2400 ft. head. Each pump is capable of cooling the plant down to the temperature where the shutdown cooling system (SCS) can be used to continue safe plant shutdown. The pumps are located in the seismic Category I auxiliary building, and are protected against internal and external flooding. Piping interconnections are provided to permit either AFW pump to feed directly either or both steam generators through the normal AFW flow path. AFW flow can also be directed to the main feedwater lines upstream of the main feedwater isolation valves.

The primary water supply for the AFWS is the seismic Category I emergency feedwater storage tank (EFST) having a capacity of 63,000 gallons. The EFST is required by Technical Specifications to contain at least 55,000 gallons of water whenever the reactor coolant system (RCS) temperature is above 300°F. The licensee states that this is adequate to maintain hot standby for 8 hours.

The EFST water level is automatically maintained by the condensate system (CS). If the CS is not available, the EFST level will be maintained by either the demineralized water from the water treatment plant or the outside condensate storage tank. In addition, emergency makeup water supply to the EFST may be obtained from the fire main of the fire protection system. EFST water level indicators are provided which will initiate, alarm and annunciate in the main control room on high or low water level.

X.3.1.2 Components - Design Classifications

The AFWS, including instrumentation and control and primary water source, is classified as an engineered safety features system and designed according to seismic Category I and safety grade requirements.

X.3.1.3 Power Sources

The steam turbine driven pump receives steam from either SG from a point upstream of each main steam isolation valve (MSIV) via direct current (DC) power solenoid air operated valves and exhausts directly to the atmosphere. (See Figure 1 for valve(s) normal position and position upon loss of power or air.)

The motor-driven pump receives power from a 4160V vital bus. Upon loss of offsite power, the operator must connect the motor-driven pump train to an emergency diesel generator bus.

X.3.1.4 Instrumentation and Controls

X.3.1.4.1 Controls

The instrumentation and controls within the AFWS have been designed as safety grade and seismic Category I components. The systems' safety function will not be affected by a single failure, since redundancy has been provided. The SG water level is manually controlled by the operator using either one of the DC solenoid air operated valves which are located outside the containment. Manual operation of these valves can be performed locally on loss of compressed air. The pumps (turbine driven and motor driven) can be controlled remotely from the control room or at the auxiliary feedwater control panel.

X.3.1.4.2 Information Available to Operator

The important AFWS information available to the operator includes pump operability (suction flow, discharge, flow), EFST level and temperature. SG flow, SG water level and control valve position indication are also provided in the control room.

X.3.1.4.3 Initiating Signals for Automatic Operations

Both AFW pumps will automatically start on trip of the last operating main feedwater pump. On loss of offsite power, only the turbine driven pump will start automatically; the motor driven pump can be started manually after connecting the motor to an emergency diesel generator bus[1]. AFW flow from the turbine-driven pump will initiate automatically upon loss of all

[1] The licensee is considering the possibility of automating the electric AFW subsystem for the case where offsite AC would be lost.

onsite and offsite AC power. In this event, the steam supply and AFW flow control valves in the turbine pump train open. Also, the turbine pump lube oil is cooled by recirculated AFW flow.

X.3.1.4.4 Testing

The AFWS is tested every 31 days in accordance with technical specification requirements. The system is tested using the pump recirculating line and noting pump pressure and flow. The instrumentation system is checked periodically, in accordance with the technical specifications, each shift, monthly or during refueling outages. AFW flow instrumentation channels for the SGs, flow indicating controls for the AFW pumps, and level indication and level alarm switches are calibrated annually.

In addition to the above periodic testing, the licensee routinely uses the AFWS for shutdown and startup operations. This practice augments the detection of malfunctions in the Ft. Calhoun AFWS periodic surveillance testing.

X.3.1.4.5 Technical Specifications

The Limiting Conditions for Operation stipulate that the reactor coolant system shall not be heated above 300°F unless the following conditions are met:

1. Both auxiliary feedwater pumps are operable. One of the auxiliary feedwater pumps may be inoperable for 24 hours provided that the redundant component shall be tested to demonstrate operability.

2. A minimum of 55,000 gallons of water in the emergency feedwater storage tank and a backup water supply to the emergency feedwater storage tank from the Missouri River by the fire water system.
3. All valves, interlocks and piping associated with the above components required to function during accident conditions are operable.

X.3.2 Reliability Evaluation Results

X.3.2.1 Dominant Failure Modes

The Ft. Calhoun AFWS consists of two subsystems, one includes a motor driven pump and the other a steam turbine driven pump. Either of these two subsystems delivering water to one of the two steam generators provides for adequate decay heat removal given the three loss of main feedwater events considered.

The following failure modes were found to dominate the demand unavailability of the Ft. Calhoun AFWS.

- Loss of Feedwater (LOFW) with Offsite AC Power Available

The dominant failure mode (~ 80% contribution) identified for the Ft. Calhoun AFWS was inadvertent closure of the single, manually operated AFW pump suction valve from the LFST that could make the redundant AFWS subsystems inoperative. Although this valve is located in a security area and is visible and locked open, the licensee plans to further strengthen the administrative checking on this valve and its position status, (i.e., a visual check would be made and logged as part of a routine data logging procedure performed for the turbine and steam plant). This added procedure

would result in a check of the valve position status at least several times each day.

The AFWS for Ft. Calhoun is used to supply feedwater to the SG's for routine shutdowns and startups. This routine use is over and above that usage resulting from actual demands and testing demands and serves to further confirm the availability of a flow path through the single locked open pump suction valve. It is considered, however, that even with the above valve status verification procedure in place, this single suction valve remains a major point of vulnerability in the Ft. Calhoun AFWS. This is because all emergency feedwater sources (primary and backup) must pass through this single valve and flow blockage (e.g., disengaged valve gate/disc) could make the AFWS inoperative.

An additional potential vulnerability of the Ft. Calhoun AFWS design was observed; however, this vulnerability was not assessed in detail during this review. This potential vulnerability is associated with the discharge piping cross-connection between the two AFWS subsystems that includes two normally open manual valves (FW 744 and FW 745). This cross-connection was installed by the licensee subsequent to the FSAR review to provide an alternate way to supply AFW flow via the main feedwater system. A single passive failure in this cross-connection would require local operator action to manually close either FW 744 or FW 745 to isolate the two subsystems from one another. The licensee should re-evaluate the position of these valves considering a postulated break in the cross-connection (see short-term recommendation number 6.)

- LOFW with only Onsite AC Power Available

The Ft. Calhoun vital electrical buses employ two emergency diesel generators (EDG) with load shedding features. The motor-driven pump train of the AFWS can be powered by either EDG unit; however, since it is normally connected to an electrical bus supplied by offsite power, it is shed from the bus on loss of offsite power. As soon as the EDG's pick up their safety loads, the plant operator is required to connect the motor-driven pump to one of the EDGs by switching action in the control room. Assessment of this human dependency and its contribution to the overall AFWS unavailability indicates a small increase relative to the above LOFW transient event ($\leq$ 20%). The single valve in the AFWS suction line remains as the dominant fault contributor.

- LOFW With Only DC Power Available

In this event, the turbine-driven pump train portion of the Ft. Calhoun AFWS would start automatically. The operator would be expected to provide backup in case the solenoid operated valves (SOVs) in the steam admission line to the turbine-driven pump fail to open. The dominant contributors to AFWS unavailability in this event were:

-Allowed test and maintenance outage times (~ 40%)

-Hardware faults (turbine pumps and manual valves around the turbine pumps) (~50%)

X.3.2.2 Principal Dependencies Identified

1. The single locked open AFW pump suction valve (FW-339) which feeds both AFWS pumps.

2. The potential common mode vulnerability in the cross-connection installed by the licensee due to valves FW 744 and FW 745 being left normally open. Failure in the cross-connection requires local manual actions to correct.

3. The operator being required to connect the motor-driven pump train of AFWS to an EDG bus for the LOFW transient with only onsite AC power available.

X.3.3 Recommendations for this Plant

The short-term recommendations (both generic, denoted by GS, and plant specific) identified in this section represent actions to improve AFW system reliability that should be implemented by January 1, 1980, or as soon thereafter as is practicable. In general, they involve upgrading of Technical Specifications or establishing procedures to avoid or mitigate potential system or operator failures. The long-term recommendations (both generic, denoted GL, and plants specific) identified in this section involve system design evaluations and/or modifications to improve AFW system reliability and represent actions that should be implemented by January 1, 1981, or as soon thereafter as is practicable.

X.3.3.1 Short-Term

1. Recommendation GS-2 - The licensee should lock open single valves or multiple valves in series in the AFW system pump suction piping and lock open other single valves or multiple valves in series that could interrupt all AFW flow. Monthly inspections should be performed to

verify that these valves are locked and in the open position. These inspections should be proposed for incorporation into the surveillance requirements of the plant Technical Specifications. See Recommendation GL-2 for the longer term resolution of this concern.

2. Recommendation GS-4 - Emergency procedures for tranferring to alternate sources of AFW supply should be available to the plant operators. These procedures should include criteria to inform the operator when, and in what order, the transfer to alternate water sources should take place. The following cases should be covered by the procedures:

   - The case in which the primary water supply is not initially available. The procedures for this case should include any operator action required to protect the AFW system pumps against self-damage before water flow is initiated; and,

   - The case in which the primary water supply is being depleted. The procedure for this case should provide for transfer to the alternate water sources prior to draining of the primary water supply.

3. Recommendation GS-6 - The licensee should confirm flow path availability of an AFW system flow train that has been out of service to perform periodic testing or maintenance as follows:

- Procedures should be implemented to require an operator to determine that the AFW system valves are properly aligned and a second operator to independently verify that the valves are properly aligned.
- The licensee should propose Technical Specifications to assure that prior to plant startup following an extended cold shutdown, a flow test would be performed to verify the normal flow path from the primary AFW sys[illegible]er source to the steam generators. The flow test should be [illegible]ed with AFW system valves in their normal alignment.

4. Recommendation GS-7 - The licensee should verify that the automatic start AFW system signals and associated circuitry are safety-grade. If this cannot be verified, the AFW system automatic initiation system should be modified in the short-term to meet the functional requirements listed below. For the longer term, the automatic initiation signals and circuits should be upgraded to meet safety-grade requirements as indicated in Recommendation GL-5.

- The design should provide for the automatic initiation of the auxiliary feedwater system flow.
- The automatic initiation signals and circuits should be designed so that a single failure will not result in the loss of auxiliary feedwater system function.
- Testability of the initiation signals and circuits shall be a feature of the design.

- The initiation signals and circuits should be powered from the emergency buses.
- Manual capability to initiate the auxiliary feedwater system from the control room should be retained and should be implemented so that a single failure in the manual circuits will not result in the loss of system function.
- The alternating current motor-driven pumps and vaves in the auxiliary feedwater system should be included in the automatic actuation (simultaneous and/or sequential) of the loads to the emergency buses.
- The automatic initiation signals and circuits shall be designed so that their failure will not result in the loss of manual capabilty to initiate the AFW system from the control room.

5. The licensee should prepare a procedure that assures that the operator manually connects the motor-driven pump train to the bus powered by the emergency diesel generator following loss of offsite power.

6. Since values FW 744 and 745 in one of the AFW pump discharge headers are normally open (see Figure 1), a postulated break in this header would cause loss of the capability to provide AFW flow to both steam generators. The licensee should re-evaluate the position of these valves considering such a postulated pipe break to revise the valve alignment to reduce the impact of such an event on the AFW capability (e.g., close valves FW 744 and FW 745).

X.3.3.2 Additional Short-Term Recommendations

The following additional short-term recommendations resulted from the staff's Lessons Learned Task Force review and the Bulletins and Orders Task Force review of AFW systems at Babcock & Wilcox-designed operating plants subsequent to our review of the AFW system designs at W- and C-E-designed operating plants. They have not been examined for specific applicability ot this facility.

1. Recommendation - The licensee should provide redundant level indications and low level alarms in the control room for the AFW system primary water supply to allow the operator to anticipate the need to make up water or transfer to an alternate water supply and prevent a low pump suction pressure condition from occurring. The low level alarm setpoint should allow at least 20 minutes for operator action, assuming that the largest capacity AFW pump is operating.

2. Recommendation - The licensee should perform a 72-hour endurance test on all AFW system pumps, if such a test or continuous period of operation has not been accomplished to date. Following the 72-hour pump run, the pumps should be shut down and cooled down and then restarted and run for one hour. Test acceptance criteria should include demonstrating that the pumps remain within design limits with respect to bearing/bearing oil temperatures and vibration and that pump room ambient conditions (temperature, humidity) do not exceed evironmental qualification limits for safety-related equipment in the room.

3. Recommendation - The licensee should implement the following requirements as specified by Item 2.1.7.b on page A-32 of NUREG-0578: "Safety-grade indication of auxiliary feedwater flow to each steam generator shall be provided in the control room.

   The auxiliary feedwater flow instrument channels shall be powered from the emergency buses consistent with satisfying the emergency power diversity requirements for the auxiliary feedwater system set forth in Auxiliary Systems Branch Technical Position 10-1 of the Standard Review Plan, Section 10.4.9."

4. Recommendation - Licensees with plants which require local manual realignment of valves to conduct periodic tests on one AFW system train, and there is only one remaining AFW train available for operation, should propose Technical Specifications to provide that a dedicated individual who is in communication with the control room be stationed at the manual valves. Upon instruction from the control room, this operator would realign the valves in the AFW system train from the test mode to its operational alignment.

X.3.3.3 Long-Term

Long-term recommendations for improving the system are as follows:

1. Recommendation - GL-1 - Licensees with plants having a manual starting AFW system should install a system to automatically initiate the AFW system flow. This system and associated automatic initiation signals

1257 323

should be designed and installed to meet safety-grade requirements. Manual AFW system start and control capability should be retained with manual start serving as backup to automatic AFW system initiation. (Note: This recommendation is applicable to the motor-driven AFW pump subsystem upon the loss of offsite AC power).

2. Recommendation GL-2 - Licensees with plants in which all (primary and alternate) water supplies to the AFW systems pass through valves in a single flow path should install redundant parallel flow paths (piping and valves).

   Liensees with plants in which the primary AFW system water supply passes through valves in a single flow path, but the alternate AFW system water supplies connect to the AFW system pump suction piping downstream of the above valve(s) should install redundant valves parallel to the above valve(s) or provide automatic opening of the valve(s) from the alternate water supply upon low pump suction pressure. The licensee should propose Technical Specifications to incorporate appropriate periodic inspections to verify the valve positions.

3. Recommendation - GL-5 - The licensee should upgrade the AFW system automatic initiation signals and circuits to meet safety-grade requirements.

4. Recommendation - The licensee should evaluate the following concerns:

a. The discharge lines of both AFW pumps combine into a single header through which all AFW water must flow. A pipe break in this single flow path could result in the loss of the entire AFW system function.

b. The Ft. Calhoun AFW system design does not meet the high energy line break criteria in SRP 10.4.9 and Branch Technical Position 10-1; namely, that the AFW system should maintain the capability to supply the required AFW flow to the steam generator(s) assuming a pipe break anywhere in the AFW pump discharge lines concurrent with a single active failure.

The licensee should evaluate the postulated pipe breaks stated above and (1) determine any AFW system design changes or procedures necessary to detect and isolate the break and direct the required feedwater flow to the steam generator(s) before they boil dry or (2) describe how the plant can be brought to a safe shutdown condition by use of other systems which would be available following such postulated events.

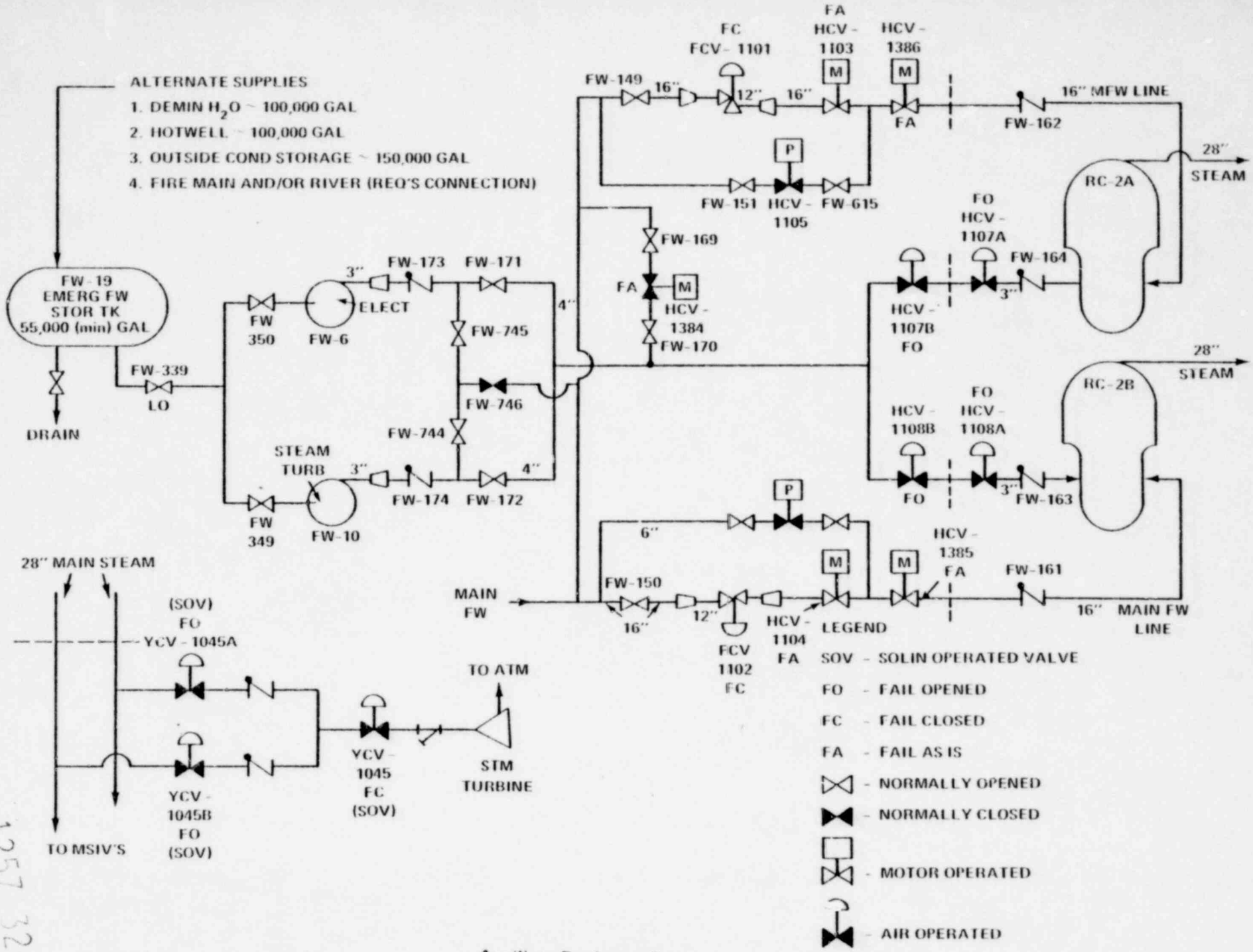

Auxiliary Feedwater System
Ft. Calhoun
Figure 1

1257 326

ENCLOSURE 2

BASIS FOR AUXILIARY FEEDWATER SYSTEM FLOW REQUIREMENTS

As a result of recent staff reviews of operating plant auxiliary feedwater systems (AFWS), the staff concludes that the design bases and criteria provided by licensees for establishing AFWS requirements for flow to the steam generator(s) to assure adequate removal of reactor decay heat are not well defined or documented.

We require that you provide the following AFWS flow design basis information as applicable to the design basis transients and accident conditions for your plant.

1. a. Identify the plant transient and accident conditions considered in establishing AFWS flow requirements, including the following events:

   1) Loss of Main Feed (LMFW)
   2) LMFW w/loss of offsite AC power
   3) LMFW w/loss of offsite and onsite AC power
   4) Plant cooldown
   5) Turbine trip with and without bypass
   6) Main steam isolation valve closure
   7) Main feed line break
   8) Main steam line break
   9) Small break LOCA
   10) Other transient or accident conditions not listed above.

   b. Describe the plant protection acceptance criteria and corresponding technical bases used for each initiating event identified above. The acceptance criteria should address plant limits such as:

   - Maximum RCS pressure (PORV or safety valve actuation)
   - Fuel temperature or damage limits (DNB, PCT, maximum fuel central temperatu
   - RCS cooling rate limit to avoid excessive coolant shrinkage
   - Minimum steam generator level to assure sufficient steam generator heat trans fer surface to remove decay heat and/or cooldown the primary system.

1257 727

2. Describe the analyses and assumptions and corresponding technical justification used with plant conditions considered in 1.a. above including:

   a. Maximum reactor power (including instrument error allowance) at the time of the initiating transient or accident.

   b. Time delay from initiating event to reactor trip.

   c. Plant parameter(s) which initiates AFWS flow and time delay between initiating event and introduction of AFWS flow into steam generator(s).

   d. Minimum steam generator water level when initiating event occurs.

   e. Initial steam generator water inventory and depletion rate before and after AFWS flow commences - identify reactor decay heat rate used.

   f. Maximum pressure at which steam is released from steam generator(s) and against which the AFW pump must develop sufficient head.

   g. Minimum number of steam generators that must receive AFW flow, e.g., 1 of 2, 2 of 4?

   h. RC flow condition - continued operation of RC pumps or natural circulation.

   i. Maximum AFW inlet temperature.

   j. Following a postulated steam or feed line break, time delay assumed to isolate break and direct AFW flow to intact steam generator(s). AFW pump flow capacity allowance to accomodate the time delay and maintain minimum steam generator water level. Also identify credit taken for primary system heat removal due to blowdown.

   k. Volume and maximum temperature of water in main feed lines between steam generator(s) and AFWS connection to main feed line.

   l. Operating condition of steam generator normal blowdown following initiating event.

   m. Primary and secondary system water and metal sensible heat used for cooldown and AFW flow sizing.

   n. Time at hot standby and time to cooldown RCS to RHR (or SCS) system cut in temperature to size AFW water source inventory.

3. Verify that the AFW pumps in your plant will supply the necessary flow to the steam generator(s) as determined by items 1 and 2 above considering a single failure. Identify the margin in sizing the pump flow to allow for pump recirculation flow, seal leakage and pump wear.