NSP

NORTHERN STATES POWER COMPANY

MINNEAPOLIS, MINNESOTA 55401

November 21, 1979

Director of Nuclear Reactor Regulation
U S Nuclear Regulatory Commission
Washington, DC 20555

PRAIRIE ISLAND NUCLEAR GENERATING PLANT
Docket Nos. 50-282 License Nos. DPR-42
50-306 DPR-60

Auxiliary Feedwater Systems

Reference: (a) Letter, D G Eisenhut (NRC) to L O Mayer (NSP), dated October 16, 1979

Reference (a) described the results of the NRC review of the Prairie Island NGP auxiliary feedwater systems and contained short and long term recommendations. That letter also requested submittal of schedules and commitments for implementation of recommendations as appropriate. Enclosure (1) describes our review of those recommendations and contains the schedule and commitments as appropriate.

L. O. Mayer

L O Mayer, PE
Manager of Nuclear Support Services

LOM/JAG/ak

cc: J G Keppler
G Charnoff

1406 073

P

7911280 413

Enclosure (1)
November 21, 1979

REVIEW OF NRC RECOMMENDATIONS RELATED TO PRAIRIE ISLAND AFW SYSTEMS

1.0 Introduction

Sections 2.0 through 4.0 of this report addresses each of the short term, generic, and long term recommendations described in enclosure of the October 16, 1979 letter [D Eisenhut (NRC) to L O Mayer (NSP)]. Section 5.0 addresses the NRC request for information contained in Enclosure 2 of the October 16 letter.

2.0 Short Term Recommendations

2.1 Recommendation GS-1

The Technical Specification LCO for one unit operation allows the turbine-driven pump train of that unit to be unavailable indefinitely. Consequently, the plant could not provide AFW flow in the event of loss of offsite and onsite AC power. The license should propose modifications to the Technical Specifications to limit the time that a turbine-driven pump train can be inoperable during single unit operation. The licensee should update the Technical Specification LCO for both one and two unit operation to conform with current standard Technical Specifications; namely 72 hours and 12 hours for the outage time limit and action time.

Response

We intend to submit a technical specification change by January 1, 1980 on this subject. It should be noted that the January 1, 1980 date is required to allow time for preparation of the license amendment request and review by the onsite and offsite review committees.

2.2 Recommendation GS-2

The licensee should lock open single valves or multiple valves in series in the AFW system pump suction piping and lock open other single valves or multiple valves in series that could interrupt all AFW flow, including the manual valves inside containment. Monthly inspections should be performed to verify that these valves are locked and in the open position. These inspections should be proposed for incorporation into the surveillance requirements of the plant Technical Specifications.

Response

At the present time many of the AFW valves that could restrict AFW to the steam generators are locked open. We will ensure that the single valves or multiple valves in series as described in the recommendation are locked open. Currently Technical Specification 3.4 requires that manual valves that could reduce flow below that assumed for accident analysis shall be blocked and tagged in the proper position for emergency use. In addition, changes in position during power operation are required to be under direct administrative control. 1406 074

For those single valves or multiple valves in series outside containment that could interrupt AFW flow, we expect to propose by January 1, 1980 a technical specification requiring monthly inspections.

For the AFW valves in containment, a double verification of valve position is conducted prior to unit startup. In addition, flow to the steam generators is verified prior to taking the plant above 5% power. Containment entries during operation are limited to biweekly inspections by senior supervisory personnel or limited inspections considered to be of great importance. We do not intend to perform monthly verification of the containment valves because of the aforementioned controls, restrictions on access to containment, ALARA considerations, and the fact that the valves will be locked under administrative control.

In addition, maintenance which requires the containment AFW valves to be shut would be performed at RCS temperatures less than 350F and most likely at cold shutdown. The startup flow verification would ensure AFW operability prior to higher power operation where a trip would result in AFW system demand.

Thus, we feel there is adequate assurance that the valves in containment will not be repositioned.

2.3 Recommendation GS-4

Emergency procedures for transferring to alternate sources of AFW supply should be available to the plant operators. These procedures should include criteria to inform the operators when, and in what order, the transfer to alternate water sources should take place. The following cases should be covered by the procedures:

The case in which the primary water supply is not initially available. The procedures for this case should include any operator actions required to protect the AFW system pumps against self-damage before water flow is initiated; and,

The case in which the primary water supply is being depleted. The procedure for this case should provide for transfer to the alternate water sources prior to draining of the primary water supply.

1406 075

Response

Present feedwater-cndensate (C28) and emergency cooldown (E17) procedures describe cooling water as the backup water supply for the auxiliary feedwater pumps. A more detailed procedure will be prepared to address the GS-4 concerns. This procedure will address:

(1) Symptoms of a loss of aux feed,
(2) Criteria and rder for transferring AFW pump sources
(3) Operator action to protect AFW pump against damage to low suction pressure
(4) Operation of the turbine driven AFW pump without AC power

Precautions in procedure C28 discuss the level at which suction to the AFW pumps is lost. This precaution will be incorporated into the new procedure as well as consideration of the two cases listed.

2.4 Recommendation GS-5

The as-built plant should be capable of providing the required AFW flow for at least two hours from one AFW pump train independent of any alternating current power source. If manual AFW system initiation or flow control is required following a complete loss of alternating current power, emergency procedures should be established for manually initiating and controlling the system under these conditions. Since the water for cooling of the lube oil for the turbine-driven pump bearing may be dependent on alternating current power, design or procedural changes shall be made to eliminate this dependency as soon as practicable. Until this is done, the emergency procedures should provide for an individual to be stationed at the turbine-driven pump in the event of the loss of all alternating current power to monitor pump bearing and/or lube oil temperatures. If necessary, this operator would operate the turbine-driven pump in an on-off mode until alternating current power is restored. Adequate lighting powered by direct current power sources and communications at local stations should also be provided if manual initiation and control of the AFW system is needed.

Response

The turbine driven AFW pump would be used to provide AFW flow in the event of loss of all AC power. At the present time, the inlet steam supply valve, by the pump, would have to be manually opened and the governor manually controlled to regulate turbine speed and flow or outlet valves throttled. As described above, (Response to GS-4) an emergency procedure will be developed for manually initiating and controlling the AFW during a loss of all AC power.

The water for cooling the TD AFW pump's bearing lube oil is supplied from the class I cooling water system. This cooling water is supplied by diesel driven cooling water pumps in event of a loss of all AC.

1406 076

During events involving loss of all AC power an operator would need to be stationed at the TD AFW pump for controlling turbine speed (and AFW flow). Duties discussed by the NRC recommendation would also be appropriate, i.e. monitoring bearing and lube oil temperatures.

During events such as a loss of all AC emergency lighting would be provided from the Class 1E DC distribution system (Figure 2).

Sound powered communications is already available in the AFW pump vicinity (previously installed to allow local operator control at the hot shutdown panel).

2.5 Recommendation GS-6

The licensee should confirm flow path availability of an AFW system flow train that has been out of service to perform periodic testing or maintenance as follows:

- Procedures should be implemented to require an operator to determine that the AFW system valves are properly aligned and a second operator to independently verify that the valves are properly aligned.

- The licensee should propose Technical Specifications to assure that prior to plant startup following an extended cold shutdown, a flow test would be performed to verify the normal flow path from the primary AFW system water source to the steam generators. The flow test should be conducted with AFW system valves in their normal alignment.

Response

Present surveillance procedures used to verify operability of the AFW pumps require that one operator verify that the AFW system valves are properly aligned and a second operator independently verify that the valves are properly aligned. Maintenance on engineered safety systems as AFW, requires that a work request authorization be completed. This WRA specifies that operability be verified by the appropriate surveillance procedure after maintenance has been completed. Thus, after maintenance is performed, the dual verification would be performed.

Currently the Prairie Island Technical Specifications require that the AFW System be operable prior to taking RCS temperature above 350F. Valve lineup and pump status checklists are performed prior to exceeding 350F. Operating practice at Prairie Island has been to use the AFW pumps for supplying the steam generators until the main feed system is initiated at ~5% power. This practice verifies operability of the AFW system. Thus a flow test has been consistently performed at this plant.

Technical Specifications covering this subject will be submitted by January 1, 1980. This time is required to allow preparation of the specification change and review onsite and offsite review committees.

1406 077

2.6 Recommendation GS-7

The licensee should verify that the automatic start AFW signals and associated circuitry are safety grade. If this cannot be verified, the AFW system automatic initiation system should be modified in the short-term to meet the functional requirements listed below. For the longer term, the automatic initiation signals and circuits should be upgraded to meet safety grade requirements as indicated in Recommendation GL-5.

- The design should provide for the automatic initiation of the auxiliary feedwater system flow.
- The automatic initiation signals and circuits should be designed so that a single failure will not result in the loss of auxiliary feedwater system function.
- Testability of the initiation signals and circuits shall be a feature of the design.
- The initiation signals and circuits should be powered from the emergency buses.
- Manual capability to initiate the auxiliary feedwater system from the control room should be retained and should be implemented so that a single failure in the manual circuits will not result in the loss of system function.
- The alternating current motor-driven pumps and valves in the auxiliary feedwater system should be included in the automatic actuation (simultaneous and/or sequential) of the loads to the emergency buses.
- The automatic initiation signals and circuits shall be designed so that their failure will not result in the loss of manual capability to initiate the AFW system from the control room.

Response

The automatic initiation signals and circuits currently are safety grade:

1. The design provides for automatic initiation of AFW system flow.

2. A single failure will not result in a loss of AFW system function. AFW initiating signals for both pumps are -

   (a) "S" - actuated by

   2/3 Low pressurizer pressure (<1815 psig)

   2/3 High containment pressure (<4 psig)

   2/3 Low steam line pressure (<500 psig)

   which provides protection for LOCA, steam line break, and steam generator tube rupture accidents.

1406 078

(b) Low Low steam generator level -

2/3 < 13% (Technical Specifications setpoint required to be <5%)

(c) Both main feed pump breakers open - provided by single 52b contacts on each feed pump. This actuation logic is bypassed prior to the time when the feed pumps are operating. This bypass allows the AFW pumps to be left in AUTO so that "S" and/or "Lo Lo SG Level" can auto start the AFW pumps when the plant is being started up.

Thus single failure in the "S" or the "Lo Lo SG Level" logic will not result in loss of system function. The MFP breaker logic can be viewed as a backup or anticipatory signal for the Lo Lo steam generator level.

3. Testability of the initiation signals and circuits is a feature of the design of the reactor protection system.

4. The steam generator level sensors and SI actuation related sensors are safety grade and are powered from safeguards power supplied instrument buses. The control circuits are supplied by DC power which receive power from the safeguards power supply batteries.

5. Manual initiation of both AFW pumps for each plant is available from the control room and locally at the hot shutdown panel. A single failure will not result in loss of system function.

6. The motor driven AFW pumps only are involved in the sequential automatic actuation of loads to emergency buses. All motor operated safeguards valves receive power immediately when the diesel generators supply power.

7. The automatic initiation circuits and signals are designed such that failure will not result in loss of manual capability.

3.0 Additional Short-Term Recommendations

We have reviewed those NRC recommendations on pages 13 and 14 of Reference for applicability to the Prairie Island facility.

3.1 Recommendation

"The licensee should provide redundant level indications and a low level alarm in the control room for the AFW system primary water supply to allow the operator to anticipate the need to make up water or transfer to an alternate water supply and prevent a low pump suction pressure condition from occurring. The low level alarm setpoint should allow at least 20 minutes for operator action, assuming that the largest capacity AFW pump is operating."

1406 079

Response

Currently 11 condensate storage tank has 1 level indication and a high/low level alarm. 21 and 22 condensate storage tanks are cross-connected and have a single level indication and high/low level alarm for the two tanks. Since all 3 tanks are cross-connected, there is an inherent redundant level indication.

The Technical Specifications, Section 3.4.A.4 requires "A minimum of 100,000 gallons of water is available in the condensate storage tanks and a backup water supply of river water is available through the cooling water system." Because of this specification, operators have always been alert to a low level condition. In addition, the condensate-feedwater procedure C28 contains a precaution that "the suction supply to the AFW pumps from the condensate storage tanks is lost at the 3' level".

The low level alarm is currently at a level that assures at least 20 minutes are available before suction is lost.

3.2 Recommendation

The licensee should perform a 72-hour endurance test on all AFW system pumps, if such a test or continuous period of operation has not been accomplished to date. Following the 72-hour pump run, the pumps should be shut down and cooled down and then restarted and run for one hour. Test acceptance criteria should include demonstrating that the pumps remain within design limits with respect to bearing/bearing oil temperatures and vibration and that pump room ambient conditions (temperature, humidity) do not exceed environmental qualification limits for safety related equipment in the room.

Response

During initial startup testing and operations over the past 6 years, one AFW pump have been exposed to prolonged operation, of the extent cited in the recommendation. As suggested, we intend to prepare an operational endurance test procedure with acceptance criteria. We expect to complete these tests prior to start of the next Unit 2 refueling in January 1980.

3.3 Recommendation

The licensee should implement the following requirements as specified by Item 2.1.7.b on page A-32 of NUREG-0578.

"Safety-grade indication of auxiliary feedwater flow to each steam generator shall be provided in the control room. The auxiliary feedwater flow instrument channels shall be powered from the emergency buses consistent with satisfying the emergency power diversity requirements for the auxiliary feedwater system set forth in Auxiliary Systems Branch Technical Position 10-1 of the Standard Review Plan, Section 10.4.9."

1406 080

Auxiliary feedwater flow indication is provided for steam generator. This indication is powered by safeguards power supplies and meets the control grade requirements cited in the October 30 letter from H Denton regarding Lessons Learned (described further in October 20, 1979 letter, L O Mayer (NSP) to Director of Nuclear Reactor Regulation (NRC).

We believe the auxiliary feed system meets the requirements of Branch Technical Position ASB10-1 Revision 1 that are recommended.

3.4 Recommendation

Licensees with plants which require local manual relignment of valves to conduct periodic tests on one AFW system train, and there is only one remaining AFW train available for operation, should propose Technical Specifications to provide that a dedicated individual who is in communication with the control room be stationed at the manual valves. Upon instruction from the control room, this operator would realign the valves in the AFW system train from the test mode to its operational alignment.

Response

The AFW system surveillance procedures will be reviewed to not require local manual realignment of valves. Thus no Technical Specification should be required.

4.0 Long-Term Recommendation

4.1 Recommendation - GL-3

"At least one AFW system pump and its associated flow path and essential instrumentation should automatically initiate AFW system flow and be capable of being operated independently of any alternating current power source for a least two hours. Conversion of direct current power to alternating current is acceptable."

Response

The turbine driven AFW pumps, 11 and 22, can be manually started and operated independently of AC power. Normally the suction valves from the condensate storage tank header are open so that upon pump start, water is pumped immediately to the steam generators. In the event of unavailability of the primary liquid source, the motor operated valves (MOV) from the CST can be manually shut and the motor operated valves from the appropriate cooling water header can be manually opened. The CST supply line has a seismically qualified check valve. Because of this the CST supply MOV need not be shut.

Since the steam generator water inventory will be gradually depleted over a period on the order of 30 minutes, there is time available for the operator to manually start the TD AFW pump.

1406 081

We are currently considering modifications to eliminate dependency on an AC source. Direct current options are being considered.

4.2 Recommendation - GL-4

"Licensees having plants with unprotected normal AFW system water supplies should evaluate the design of their AFW systems to determine if automatic protection of the pump is necessary following a seismic event or a tornado. The time available before pump damage, the alarms and indications available for the control room operator, and the time necessary for assessing the problem and taking action should be considered in determining whether operator action can be relied on to prevent pump damage. Consideration should be given to providing pump protection by means such as automatic switchover of the pump suctions to the alternate safety-grade source of water, automatic pump trip on low suction pressure or upgrading the normal source of water to meet seismic Category I tornado protection requirements."

Response

The normal source of water, the condensate storage tanks, do not meet seismic category I tornado protection requirements. There is redundancy of these tanks as shown in Figure 1. It is unlikely that the seismic or tornado event could affect all 3 tanks because of location.

AFW pump suction protection is a valid concern. For this reason, we are investigating the various options available, one of which is to install a low suction pressure trip for the AFW pump. Such a design change might include a control room alarm.

Currently indications available to the operator are the condensate storage tank level indications. Operating procedure C-28 (Condensate-Feedwater) contains a precaution for the operator that:

"The suction supply to the AFW pumps from the Condensate Storage Tanks is lost at a tank level of 3' as indicated LI-41223-2 [LI-41698-02].

Thus the operators have been alerted to the possibility of loss of AFW pump suction. As discussed in an earlier section, a procedure will be prepared to address a loss of AFW and alert the operator or appropriate conditions for switching suction to the cooling water system.

The Prairie Island Cooling Water System was briefly discussed in the NRC AFW system description. It should be noted that this system has two diesel driven pumps that will start upon SI actuation or in the case of a sustained low pressure condition. This system is a Class I seismic system. Suction for the diesel driven pump is available from either the pump suction bay (same as circulating water pumps) or via a 36" emergency intake pipe from the Mississippi Rive.

Design of the cooling water system is described in Section 9.6.2 of the FSAR. The emergency cooling water system is illustrated on Figure 9.6-2. The emergency intake pipe is designed for an event resulting in a low river level. Thus supply to the AFW pumps can be assured.

4.3 Recommendation - GL-5

"The licensee should upgrade the AFW system automatic initiation signals and circuits to meet safety-grade requirements."

As described previously, the current AFW system should meet safety-grade requirements.

5.0 Request for Information

The NRC staff requested in Enclosure (2) of reference (1) that NSP provide various AFW design basis information. We have requested this information from the NSSS supplier, Westinghouse, and architect-engineer, Fluor Pioneer, and will provide same to the NRC when the information is available.

1406 083

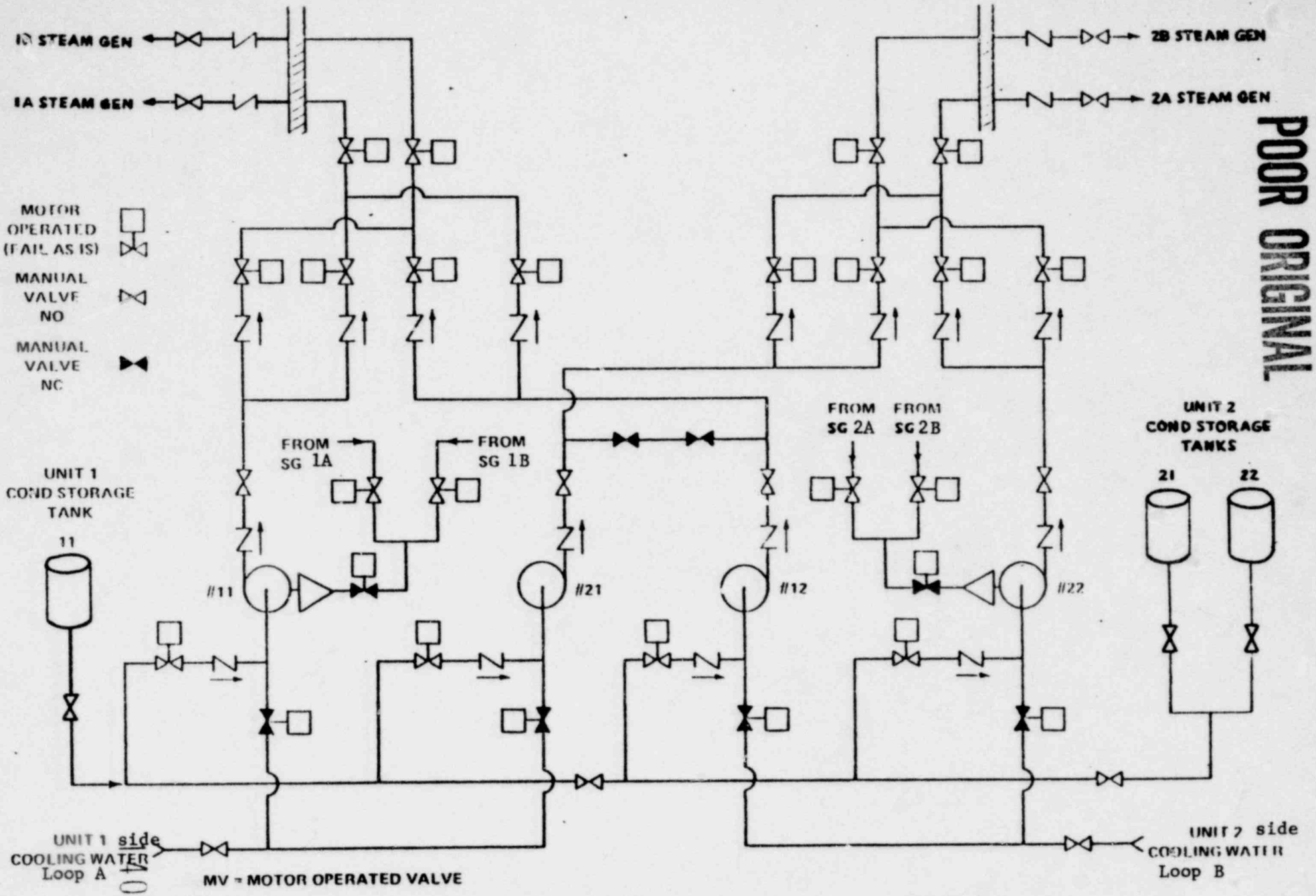

POOR ORIGINAL

Auxiliary Feedwater System
Prairie Island
Figure 1

1406 084

POOR ORIGINAL

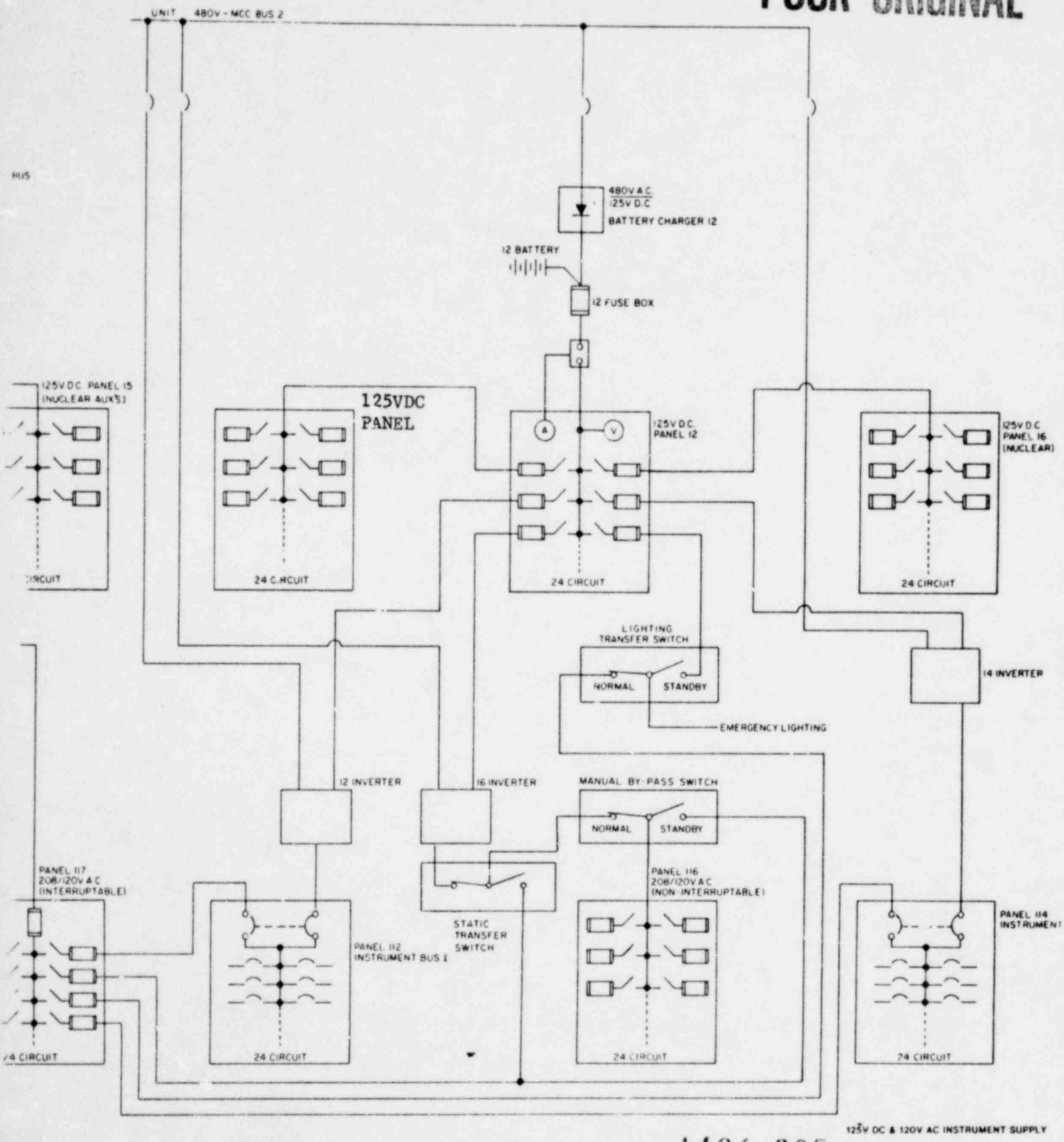

FIGURE 2 1406 085 (TYPICAL)