Motor-Operated Valve Training Course

Thomas G. Scarbrough
Michael F. Farnan
U.S. Nuclear Regulatory Commission

PUBLIC VERSION

NRC iLearn ID_372151

April 2019

Day 3 of 3

Agenda

- Day 1
  1. MOV Training Basis
  2. MOV Training Objectives
  3. MOV Design
  4. MOV Lessons Learned
  5. MOV Performance and Design Analysis

Agenda

- Day 2
  6. MOV Actuator Control Design
  7. MOV Diagnostics
  8. MOV Design-Basis Capability
  9. MOV Preservice and Inservice Testing
  10. MOV Inspection Issues
  11. Operating Experience and Notices

Agenda

- Day 3
  12. NRC Inspection Procedures
  13. Case Studies
  14. MOV Inspection Recommendations
  15. Sharepoint Web Site – Inspector Tools
  16. Special Topic: 10 CFR 50.69
  17. Roundtable and Q/A Session

12. NRC Inspection Procedures

MOV Capability Inspection Procedure 62708

- NRC Inspection Procedure (IP) 62708 (October 2013), “Motor-Operated Valve Capability,” assesses extent of MOV performance issues and adequacy of licensee’s evaluation when directed by IP 95002.
- IP 62708 evaluates MOV selection, scope, design calculations, testing, trending, preventive maintenance (PM), corrective action, post-maintenance testing (PMT), operating experience, periodic verification, and program changes.
- Appendix A provides guidance on MOV program scope.
- Appendix B discusses MOV background issues.

IP 62708 Inspection Requirements

- MOV Selection: Select sample of risk-significant MOVs of various sizes, types, and manufacturers.
- MOV Program Scope: Ensure appropriate safety-related MOVs with any changes from GL 89-10 or initial review.
- Design Calculations: Review design documents and calculations for MOV functional requirements, motor and actuator sizing, switch settings, and modifications.
- Testing: Review test procedures, equipment, training, acceptance criteria, and results. Observe testing if schedule permits.
- MOV Trending: Review trend reports, failure analysis, corrective actions, and nonconformance reports.
- PM: Review documentation for frequency, working environment, and operational experience.

IP 62708 Inspection Requirements

(continued)

- Corrective Actions: Determine whether licensee is periodically reviewing data, and effectiveness of corrective actions.
- PMT: Review sample to verify PMT results demonstrate capability.
- Operating Experience: Review processing and control of operating experience and vendor notification
- Periodic Verification: Review test results and verify incorporated into design and setup calculations.
- Program Changes: Review program changes since NRC review or inspections.

IP 62708 Inspection Guidance

- MOV Selection: Review MOV operating experience for potential issues
- MOV Program Scope: Appendix A to IP 62708
- Design Calculations: Check assumptions such as VF, SFC, LSB, stem lube degradation, spring pack relaxation, motor performance, TSR, allowable structural limit, errors, degradation, and grouping
- Testing: Testing questions include best available data? Industry data? Assumption justification? Reasonable industry data? MOV capability? Test result evaluations? Diagnostic accuracy? Monitor test data for assumptions? Grouping? Test observations include setup and calibration, test personnel qualification, test equipment accuracy, and test result review.

IP 62708 Inspection Guidance

- MOV Trending: Qualitative and quantitative plant and industry data
- PM: Check adequacy of PM activities
- Corrective Actions: Justify TS increase
- PMT: Justify if not testing (such as packing adjustments)
- Operating Experience: Evaluate consideration of operating experience
- Periodic Verification: Detail in later slides
- Program Changes: Discuss program changes

MOV Design-Basis Capability Methods

1. Dynamic flow testing with diagnostics of each MOV where practicable.
2. Application of EPRI MOV PPM.
3. Grouping of MOVs that were dynamically tested at the plant.
4. Use of valve test data from other plants or research programs. (Least preferred because licensee would have minimal information regarding tested valve and its history.)

MOV Exercising Beyond Quarterly

- When implementing ASME OM Code Appendix III or Code Case OMN-1, review licensee's consideration of extending MOV exercising beyond quarterly.
- *Federal Register* Notice 64 FR 51370 (9-22-1999) states licensee needs information from specific MOV, or similar MOVs, to demonstrate that exercising on RFO frequency does not significantly affect component performance.
- Information may be obtained by grouping similar MOVs and staggering exercising of MOVs equally over interval.
- Re-apply quarterly frequency when degradation in high-risk MOV performance is identified.
- Licensee must implement diagnostic testing of those MOVs to provide assurance of their design-basis capability.
- Licensee needs to evaluate performance results to determine if risk ranking must be raised to higher level.

MOV Periodic Verification

- Determine if licensee specifies JOG program to satisfy 10 CFR 50.55a(b)(3)(ii).
- Review JOG program attributes including valve classification, materials, service conditions, qualifying basis, and verification of valve factor.
- Verify licensee using JOG risk ranking and classification.
- For JOG Class D MOVs or licensee not applying JOG program, verify licensee established plant-specific program.
- Review sample of MOV static and dynamic test results and determine if results incorporated into design and setup.
- Verify licensee addressing actuator output.
- Review MOV periodic verification documentation and confirm commitments implemented.

MOV Periodic Verification

(continued)

- Determine whether valve modifications have eliminated original design-basis capability of specific safety-related MOVs.
- JOG program intended to address valve degradation pertaining to valve configuration, design, and system application.
- JOG dynamic test program not intended to provide data for justifying valve design-basis capability.
- If valve in service has disallowing modification, determine whether licensee has obtained new qualifying basis.
- Contact HQ for assistance, if required, in evaluating periodic verification of MOV design-basis capability.

Appendix A: MOV Program Scope

- Safety-related defined in NRC regulations.
- MOVs always in safety position can be eliminated.
- MOV that prevents safety function must be capable of operating or declared inoperable.
- GL 89-10 footnote describes design-basis events.
- Pipe breaks should be consistent with specific plant.
- Inadvertent mispositioning removed by GL 89-10 S4 and 7.
- Long-term passive failures consistent with specific plant.
- Licensees may rely on FSAR acceptance limits if consistent with licensing basis.
- Licensees required to meet single failure criterion.
- Valves operated below plant-specific safe-shutdown conditions not required to be in scope unless commitment. (e.g., MOV in scope if Appendix R commitment).

Appendix B: MOV Background

- 10 CFR Part 50, Appendix A (GDC) and Appendix B (QA).
- 10 CFR 50.55a incorporates ASME OM Code.
- GL 89-10, GL 95-07, and GL 96-05 Implementation.
- ASME OM Code, Appendix III (MOV Inservice Testing).
- RG 1.192 specifies acceptable OM Code Cases with conditions.
- ASME QME-1-2007 accepted by RG 1.100 (Rev. 3).
- Industry bulletins and NRC generic communications alert licensees to MOV operating experience issues.

Power-Operated Gate Valve PL/TB Inspection Procedure 62710

- IP 62710 (April 2010), “Power-Operated Gate Valve Pressure Locking and Thermal Binding,” provides guidance for independently assessing extent of condition related to power-operated gate valve PL/TB as part of IP 95002.
- IP 62710 evaluates power-operated gate valve program scope, design bases conditions, PL/TB calculations, testing, corrective actions, and trending.
- Provides guidance on PL methodologies and modifications.
- Provides guidance on TB analyses.

IP 62710 Inspection Requirements

- Program Scope
- Design Bases Conditions
- Pressure Locking and Thermal Binding Calculations
- Testing
- Pressure Locking Corrective Actions
- Thermal Binding Corrective Actions
- Trending
- Problem Identification & Resolution (PI&R) Inspection Reports

IP 62710 Inspection Guidance

- Program Scope: See Attachment 1
- Design Bases Conditions: Leak paths, external and internal conditions, surveillance test potential impact, close hot potential impact, and heat transfer potential
- Pressure Locking and Thermal Binding Calculations:
  - Limitorque Technical Update 98-01
  - NUREG-1275
  - NUREG/CR-6611
  - ComEd Pressure Locking Method
  - Industry Methods
- Testing: Review diagnostic test results

IP 62710 Inspection Guidance

- Pressure Locking Corrective Actions:
  - Cycle valves
  - Minimal pump operation to reduce heat
  - Avoid opening valve
  - Dry layup approach
  - Avoid pressurizing train
- Pressure Locking Modifications:
  - Limit switch use
  - Hole in upstream side of disc
  - Bonnet relief
  - Bonnet vent with manual valve
  - Larger actuator
  - Install check valve

IP 62710 Inspection Guidance

- Thermal Binding Corrective Actions:
  - Declare inoperable
  - Cycle valve frequently
  - Avoid closing valve if temperature change will occur
- Thermal Binding Modifications:
  - Install double disc gate valve
  - Install SB actuator
- Trending: Review qualitative and quantitative plant-specific and industry trends
- PI&R Inspection Reports: Check for applicable information.

IP 62710 Attachment 1

- Considerations in Reviewing Licensee GL 95-07 Scope
  - Safety-related
  - Always in safety position
  - Capable of returning to safety position per NUREG-1482
  - Design basis event safety function
  - Mispositioning not included
  - Safe shutdown function

IP 62710 Attachment 2

- Generic List of Valves Susceptible to Pressure Locking and Thermal Binding
  - PWR PL: AFW discharge valves, Containment Spray discharge valves, RHR valves, and PORV block valves
  - PWR TB: PORV block valves
  - BWR PL: Containment spray valves, Core Spray valves, HPCI valves, RCIC valves, and RWCU valves
  - BWR TB: HPCI valves and RCIC valves

New Reactor Functional Design and Qualification, and IST Program Inspection Procedure 73758

- IP 73758 (September 2018), “Part 52, Functional Design and Qualification, and Preservice and Inservice Testing Programs for Pumps, Valves, and Dynamic Restraints,” provides guidance to evaluate:
  - establishment, implementation and results of functional design and qualification of pumps, valves, and dynamic restraints (snubbers)
  - establishment, implementation, and results of PST and IST for pumps, valves, and dynamic restraints during construction of Part 52 plants.
- 2018 update includes the latest 50.55a requirements and operating experience.

IP 73758 Overview

- IP 73758 based on inspection approach used for MOV inspections in response to GL 89-10.
- Appendices describe each programmatic inspection phase.
- Attachments describe specific MOV, AOV, and pyrotechnic-actuated (squib) valve inspection activity.
- Inspection resources estimated as 160-500 hours for programmatic inspections described in each appendix.

IP 73758 Inspection Phases

- Initial program inspection (Appendix A)
- Implementation inspection of functional design and qualification program (Appendix B)
- Implementation inspection of PST/IST program (Appendix C)
- Close-out inspection of functional design, qualification, and PST/IST programs in preparation for plant startup (Appendix D)

IP 73758, Attachment 1 Motor-Operated Valves

- MOV Selection
- MOV Program Scope
- Design Calculations
- Design-Basis Verification, PST and IST Testing
- MOV Trending
- Preventive Maintenance
- Corrective Actions
- Post-Maintenance Testing
- Operating Experience
- Periodic Verification
- Program Changes

MOV Selection

- MOV risk insights and performance
- BWROG (NEDC-32264) and WOG (V-EC-1658, Rev. 1) MOV risk ranking methodologies accepted with conditions in SE on 2/27/96 and 4/14/98, respectively.
- Focus on high risk and low margin MOVs
- Consider various sizes, types, and manufacturers
- Verify PL/TB addressed.

MOV Program Scope

- Safety-related MOVs
- If valve position has no effect on train operation, then MOV can be removed from scope; but containment isolation valves always have at least close function.
- MOVs in position that prevents safety-related train operation must be capable of returning to safety position.
- Licensees may rely on FSAR for design-basis events where consistent with facility licensing basis.
- Safe shutdown licensing basis defined in licensing documents.

MOV Design Calculations

- Review determination of design-basis functional requirements.
- Review methodologies used for thrust/torque calculations:
  - Industry valve factor method
  - EPRI Application Guide TR-106563 on MOVs
  - EPRI MOV PPM for valve thrust/torque requirements
  - Limitorque Technical Update 98-01 (S1) for AC MOV output
  - ComEd White Paper 125 for MOV output
  - BWROG DC MOV methodology for stroke time and output
  - EPRI MOV Thrust Uncertainty Method for torque switch setting

- Review bases for MOV performance assumptions
  - Valve factor (VF)
  - Stem friction coefficient (SFC)
  - Load sensitive behavior or rate of loading (LSB or ROL)
  - Margins for stem lubrication degradation and springpack relaxation
  - Motor performance
    - rating
    - efficiencies (pullout, run, and stall)
    - application factor
    - degraded voltage factor
    - ambient temperature
  - Actuator efficiency
  - Degraded voltage

- Review bases for MOV performance assumptions (continued)
  - Differential pressure (DP) load extrapolation
  - Control Switch Trip (CST) repeatability (torque or limit)
  - Thrust/torque limit extrapolation
  - Equipment error
  - Degradation
  - Grouping (GL 89-10 Supplement 6)

- Evaluate design-basis capability of sampled MOVs
  - Request table of safety-related MOVs indicating ID number; description; open/close safety function; calculation method; MOV type and size (ac/dc motor, actuator, and valve); risk significance; DP; VF; SFC; LSB or ROL; design thrust/torque; CST thrust/torque; and margin (as applicable)
  - Review MOV table for assumptions and margin to demonstrate that all MOVs have design-basis capability
  - Select 3 to 5 MOVs for detailed review based on risk and margin, plus other items of interest (such as questions on identified parameters)
  - Review design calculations for sampled MOVs for operating requirements, actuator output capability, and margin, including consideration of uncertainties
    - MOVs should have 5% margin after all uncertainties addressed to avoid operability calls for minor items
  - Review stall thrust and torque evaluations
  - Expand sample as necessary

Design-Basis Verification, PST and IST Testing

- Review licensee actions to:
  - Use best available data
  - Consider industry data
  - Justify each assumption
  - Assume reasonable value where no plant-specific data
  - Where realistic values assumed, take action if calculation predicts capability problem
  - Promptly evaluate test results
  - Justify accuracy of diagnostic equipment
  - Monitor test data to affirm assumptions
  - Justify application of data to valve group
  - Verify ITAAC met.

- When observing testing:
  - verify equipment setup and calibration in accordance with vendor specifications
  - verify procedures followed
  - verify test personnel qualification
  - verify Quality Control (QC) personnel participation
  - determine equipment inaccuracies
  - verify test results adequately reviewed before declaring MOV operable
- Determine that licensee has justified accuracy of MOV diagnostic equipment.
- Verify licensee training program for personnel testing MOVs and using diagnostic equipment.
- Determine that licensee activities prior to testing do not result in unacceptable preconditioning.

Preconditioning

- Inspection Manual Part 9900, IP 61726 (Surveillance), IP 62707 (Maintenance), IP 71111.22, and NUREG-1482.
- Acceptable if necessary for (1) personnel or equipment safety, (2) manufacturer recommendations, or (3) documented adequate evaluation justifying preconditioning activity does not affect IST program to assess operational readiness of the component(s).
- Unacceptable if alters operational parameters which results in acceptable test results (e.g., cleaning breakers or stem lubrication specified as pretest activities in procedure).
- Questions: Ensures test criteria met? Fail without preconditioning? Masks as-found condition? PM before test? PM for convenience?
- If yes of any question, then evaluate for preconditioning.

MOV Trending

- Licensee periodically reviews MOV deficiencies and corrective action for trends.
- Licensee addresses plant-specific and industry feedback.
- MOV parameters for trending include:
  - valve factor
  - stem factor (as found and as left)
  - load sensitive behavior (rate of loading)
  - actuator torque output
  - quarter-turn valve bearing coefficients
  - running loads
  - motor current and voltage
  - torque switch settings
  - capability margin
  - thrust and torque at control switch trip

MOV Preventive Maintenance

- Verify periodic MOV preventive maintenance (PM) based on MOV operation, environment, and experience.
- Walkdown of PM activities include checking:
  - MOV housing for cracking and grease or oil leakage
  - mounting flange and yoke for damage
  - missing fasteners and tightness
  - stem, gear cases, and limit switches for adequate lubrication
  - stem and stem nut for damage, and metal shavings below stem nut
  - T-drains and grease relief valve (paint or dirt)
  - grease in spring pack for hardening
  - limit switch compartment for grease, dirt, and wiring integrity.
- Determine adequate MOV personnel maintenance training.
- Evaluate implementation of MOV vendor recommendations.

MOV Corrective Actions

- Verify administrative procedures require MOV failures/malfunctions/deficiencies are promptly identified and corrected.
- On sample basis, verify adequacy of analysis of MOV deficiencies, justification of corrective actions, and trending.
- Review recent MOV deficiencies and corrective actions for adequate resolution.
- Verify appropriate level of cause analysis based on safety significance.

MOV Post-Maintenance Testing

- Verify post-maintenance testing (PMT) procedures require MOVs be properly tested before return to service.
- Review selected maintenance packages and verify PMTs demonstrate MOV capable of performing its function.
- If no PMT performed, licensee should justify that test not necessary to demonstrate MOV capability
  - If PMT not performed following packing adjustment, licensee needs adequate basis to demonstrate packing torque does not adversely affect capability.
- Verify licensee adequately addressing potential preconditioning.

MOV Operating Experience

- Review licensee's procedures for addressing lessons learned from operating experience from plant, industry, and vendor notifications.
- Select sample of recent MOV issues to determine acceptable licensee action.

MOV Periodic Verification

- Review implementation of licensee's program for MOV periodic verification for compliance with 10 CFR 50.55a and ASME OM Code.
- Consider MOV operating requirements and output capability.
- Review licensee consideration of safety-related MOVs outside JOG program scope, if applicable.
- Review results of sample MOV diagnostic tests for feedback into program assumptions for valve factor, stem friction coefficient, and load sensitive behavior.

MOV Program Changes

- Review changes in MOV program since previous reviews and inspections.
- Determine significance of changes and consistency with licensee commitments and lessons learned from operating experience.

13. Case Studies

1985 Davis Besse Feedwater Failure

- In 1985, two auxiliary feedwater (AFW) isolation valves failed to open after loss of main feedwater
- Open torque switch bypass reinstated torque switch too early during opening stroke of AFW valves
- Reactor operators manually opened AFW valves
- IN 1985-50, Complete Loss of Main and Auxiliary Feedwater at a PWR Designed by B&W
- NUREG-1154, Loss of Main and Auxiliary Feedwater Event at the Davis-Besse Plant on June 9, 1985
- Bulletin 85-03 requesting licensees to evaluate high pressure system valves.

1988 Catawba AFW Failure

- In March 1988, Catawba Unit 2 AFW pump discharge isolation MOV (Borg-Warner 4-inch flexible-wedge gate valve) failed to fully close against 1800 psi differential pressure.
- Licensee reported cause to be higher valve factor than originally specified by valve manufacturer.
- In November 1988, other valves failed to close under 1800 psid during testing.
- IN 1989-61 indicated potential for air- and motor-actuated valves to not operate under high differential pressure.

1989 Palisades PORV Block Valve

- In hot standby on Nov. 21, 1989, PORV (Target Rock 4-inch Y-pattern globe valve) lifted when MOV block valve (Edwards 4-inch Split-Wedge gate valve) was opened.
- Operator turned MOV handswitch to close but seal-in circuit required full open stroke (18 seconds).
- Reactor trip occurred at 24 seconds.
- When full open, operator turned handswitch to close but MOV indicating lights continued red and green.
- At 1605 psi, safety injection signal initiated.
- MOV indicating lights continued red and green.
- After cycling, PORV reclosed at 34 seconds into event.
- Operator turned handswitch to close and valve closed after 26 seconds.

1989 Palisades Event

(continued)

- Region III initiated Augmented Inspection Team (AIT).
- Licensee modified MOV control circuit to allow block valve to be opened without seal-in feature to allow reactor operator to open valve and to signal MOV to close if problem developed.
- Licensee was able to open MOV block valve and use PORV for plant safe shutdown.
- Licensee sent PORV and block valve to Wyle laboratory (Norco, CA) for testing.
- NRC consultant EG&G (now INL) observed testing.

1989 Palisades Event

(continued)

- PORV tests were unable to duplicate second pop open as occurred at Palisades.
- Valve friction factor of 0.37 found to be used for predicting thrust requirement for MOV block valve.
- MOV successfully closed during 4 tests at Norco but steam supply insufficient to maintain pressure.
- AIT report dated January 8, 1990, found that Palisades event reinforced need for GL 89-10 programs to demonstrate MOV capability under design-basis conditions.

2002 Palo Verde Unit 1 Shutdown Cooling Line MOV Vibration

- Long history of vibration and leakage of shutdown cooling (SDC) system.
- In October 2002, SDC suction isolation MOV failure to open caused by fastener vibration.
- Vibration caused by pressure pulsations in suction line from coupling between fundamental frequency of SDC suction line and vortex shedding due to RCS flow over SDC suction line.
- Licensee relocated SDC valve to increase acoustic frequency away from vortex shedding modes.
- Acceptable vibration results obtained.

Flow-Induced Vibration

- Acoustic resonance can cause vibration that degrades reactor, feedwater, and steam components.
- IN 2002-26 and supplements discussed flow-induced component degradation during BWR uprate operation.
- In late 2005, main steam relief valves at Quad Cities 1/2 found degraded by flow-induced vibration. Resolved by installation of Acoustic Side Branches in standpipes for Quad Cities valves in 2006 to avoid resonance.
- Beginning in 1999, Palo Verde Unit 1 experienced flow-induced vibration of shutdown cooling MOV. Resolved by relocation of valve in 2006 to avoid resonance.
- SRP Sections 3.9.2 and 3.9.5, and RG 1.20 updated to include guidance on potential flow-induced vibration.

Electromatic Relief Valve

PHOTO REDACTED

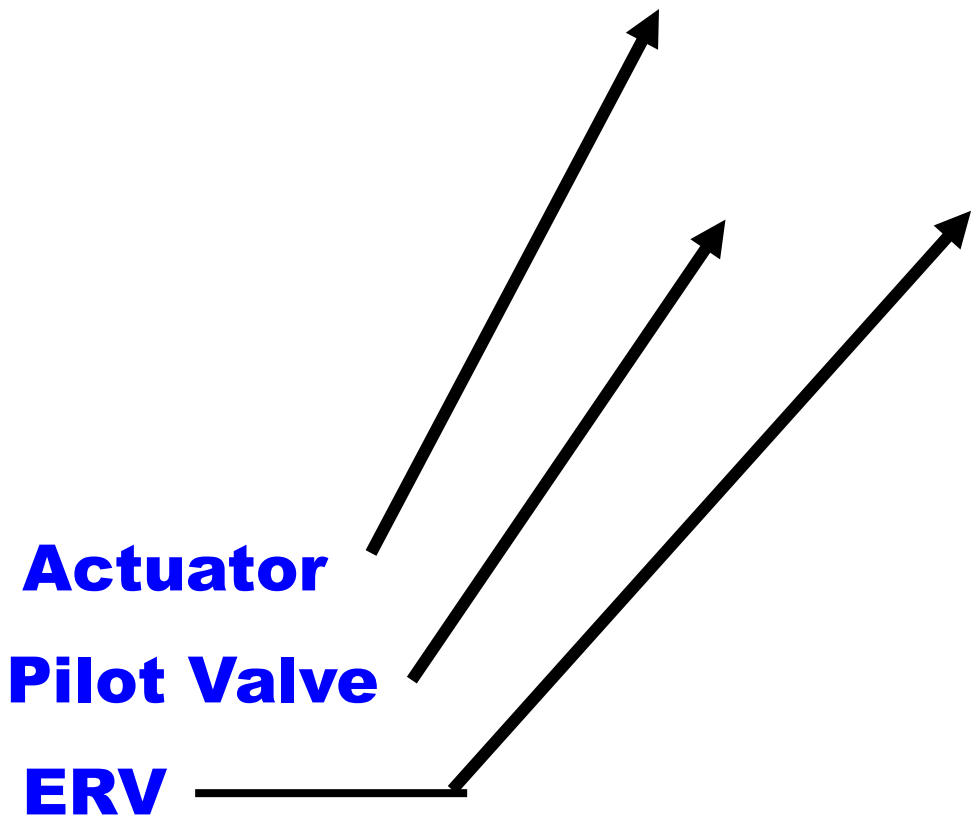

Singing Relief Valve

FIGURE REDACTED

Main Steam Line Strain Gage Readings for Quad Cities and Vermont Yankee

FIGURE REDACTED

MOV Stem-Disc Degradation

- MOV stem-disc degradation occurred at several plants, including Browns Ferry, LaSalle, Surry, River Bend, and Columbia.
- Part 21 notices issued by Flowserve (Feb. 25, 2013, and July 11, 2017) and TVA (January 4, 2013).
- Region III conducted Special Inspection Team in response to 2017 LaSalle event.
- NRC issued IN 2012-14 and IN 2017-03.
- Flowserve vendor inspection in July 2017.
- BWROG guidance for MOV stem-disc separation issue.
- NEI coordinating industry response.
- NRC considering additional regulatory action.

2010 Browns Ferry Unit 1 Event

- On 10-23-2010, Browns Ferry Unit 1 low pressure coolant injection (LPCI) outboard injection valve failed to open, but control room lights indicated open.
- 24-inch Walworth angle globe valve with valve stem threaded into disc assembly and tack welded.
- LPCI not included in GL 89-10 and GL 96-05 programs because licensee considered MOV to be passive.
- Region II inspection documented in IR 05000259, 260 and 296/2011011 determined that LPCI valve has active safety-related function to close.
- Region II issued red finding because RHR subsystem inoperable for greater than tech spec outage time.
- IN 2012-14 described event.

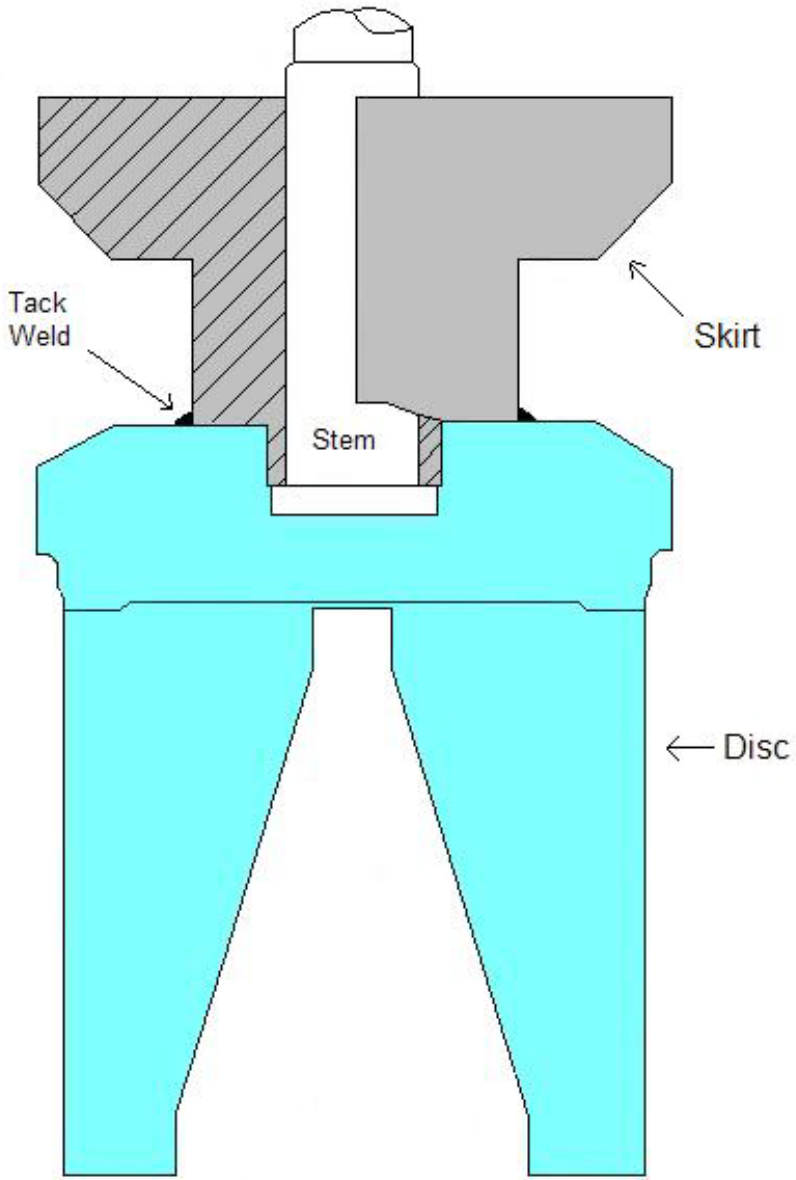

IN 2012-14
Figure 1
Walworth
Disc/Skirt/Stem
Assembly

2017 LaSalle Unit 2 Event

- On 2-11-2017, LaSalle Unit 2 High-Pressure Core Spray (HPCS) injection isolation valve failed to open, but control room lights indicated open.
- 12-inch Anchor/Darling double-disc gate valve (A/D DDGV) with 2.25 inch diameter stem threaded into wedge assembly including wedge pin through stem.
- Threaded stem lost pre-torque such that actuator torque exerted on wedge pin causing its shear failure.
- Stem and wedge thread degradation occurred during valve opening and closing cycles over several years.
- Stem-disc separation occurred due to axial shear failure of degraded threads.

NRC OpE COMM

- REDACTED

As-Found LaSalle Unit 2 HPCS Injection Valve Stem-to-Wedge Connection

As-Found LaSalle Unit 2 HPCS Injection Valve Stem-to-Wedge Connection

Similar A/D DDGV Failures

- 1999 Surry Unit 2 Reactor Coolant System (RCS) Loop A 30-inch A/D DDGV
- 2001 Browns Ferry Unit 2 High Pressure Coolant Injection (HPCI) 10-inch A/D DDGV
- 2007 River Bend Unit 1 RCS Loop A 20-inch A/D DDGV
- 2008 Browns Ferry Unit 1 HPCI 10-inch A/D DDGV
- 2011 Surry Unit 2 RCS Loop C Isolation 30-inch A/D DDGV
- 2012 Browns Ferry Unit 1 HPCI 10-inch A/D DDGV
- 2017 Columbia HPCS 12-inch A/D DDGV

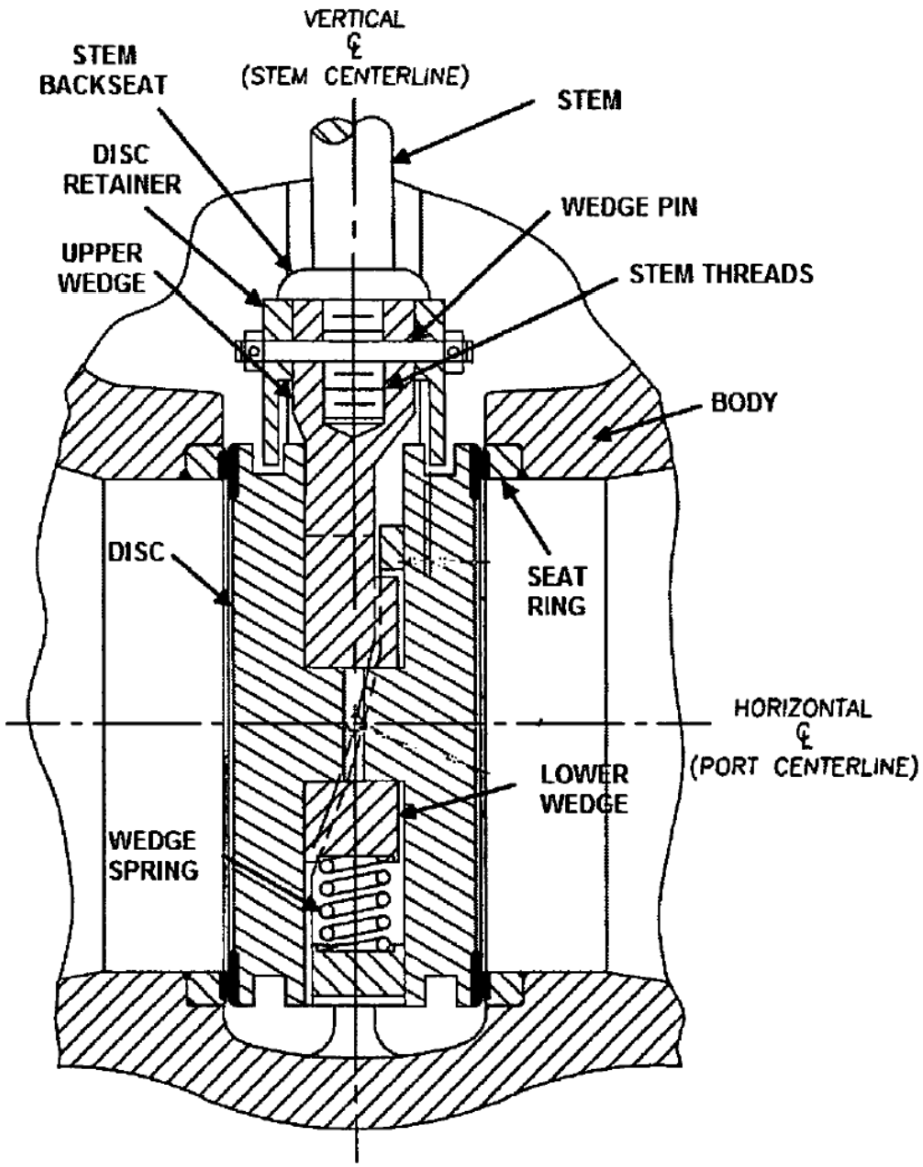

IN 2017-03
Figure 1
A/D DDGV
Assembly

A/D DDGV Response Overview

- Significant progress has been made in response to operating experience with A/D DDGV failures:
  - Industry has developed guidance
  - All licensees have submitted information on affected valves, including commitments for valve repairs
  - Industry provided information on valves repaired through end of spring 2018 refueling outages
- NRC staff has drafted an inspection procedure
- NRC staff continues to assess the need for a Generic Communication, but does not plan one at this time.

Background

- A/D DDGV failure at Browns Ferry in 2013 revealed that threaded stem-to-wedge connection had not been properly torqued
- Flowserve Part 21 notification dated February 25, 2013
  - Recommended assessing wedge pin susceptibility to shear and rework the valve if needed
- BWROG developed guidance to address Part 21 to include:
  - Prioritization and Screening Criteria
  - Evaluation Methods (wedge pin analysis, stem rotation checks)
  - Inspection and Diagnostics
  - Repair Methods

Background
(continued)

- NRC staff evaluated 2013 Part 21 and determined the issue would be monitored with no generic communication
- Additional failures occurred at LaSalle Unit 2 and Columbia
- LaSalle event elevated to NRC special inspection
- Information Notice (June 2017)
- Flowserve updated Part 21 (July 2017)
- BWROG updated guidance to Rev. 4 (August 2017)
- NRC staff considered need for generic communication due to larger population of failures and limited information readily available to the staff.

Progress to Date

- NRC staff held public meetings on guidance and licensee corrective actions
  - Staff requested clarification of guidance (October 2017)
  - NEI provided clarification (November 2017)
- All licensees submitted information in December 2017
  - Valve population
  - Valve characteristics (susceptible, non-susceptible, risk category)
  - Rework status and commitments for future repairs
  - Public Data Compilations at ML18053A023 and ML18053A904
- NRC staff held public meeting on February 15, 2018
  - Staff discussed guidance document, licensee corrective actions, and future plant inspections. Staff has concerns regarding credit for thread friction and limited effectiveness of diagnostic testing.

Progress to Date
(continued)

- NRC staff held public meeting on May 16, 2018
  - Staff discussed draft Temporary Instruction (TI)
  - Industry representatives expressed concerns that draft TI goes beyond the regulatory requirements
- NRC staff explained that the TI serves two purposes:
  - Evaluate industry progress on addressing Part 21 issue
  - Allow NRC staff to assess the need for further regulatory action
- Industry representative agreed to send NRC staff data from repairs made to date.
- Data received on July 13, 2018

Staff Assessment of Data

- NRC staff has reviewed submitted industry data and observed the following:
  - 78 valves reported reworked with 2 valves having sheared pins and 1 valve with pin degraded. Remainder reported no pin damage
  - 22 valves reported stem/wedge joint was found tight and 56 valves reported stem/wedge joint was found loose
  - Collar reported damaged in 5 valves with 2 of 5 having pin sheared
  - 47 valves reworked were size 3 inch (5 total) and 4 inch (42 total). Almost all of the 47 valves had pin margins less than -100%. All 47 valves were found with no pin damage.
  - Valves 6 inch and larger with a valve class greater than 150 tend to have much larger negative pin margins (-300% and greater)
  - 3 valves reported as found diagnostic test anomalies. 1 had a sheared pin while the other 2 valves had loose stem/wedge joint

Staff Assessment of Data
(continued)

- NRC staff assessment of industry repair and test data:
  - Appears that valves 4 inch and smaller make up majority of valve population and do not present a problem. Additional data needed to complete the assessment.
  - Appears that stem/wedge thread friction does play a part in assisting the pin with resisting the force being applied. Additional data needed to support developing acceptance criteria for crediting stem/wedge thread friction.
  - Data needed to support - actuator capability (motor size, motor curve stall value, overall actuator ratio, motor speed), stem diameter, stem thread diameter, stem thread half angle, stem/wedge material, stem/wedge pitch and lead, wedge pin size, wedge pin material, stem/wedge/wedge pin yield & ultimate stress values, stem/stemnut coefficient of friction, stem/wedge coefficient of friction, shear factor applied, and tested torque and/or thrust values.

Next Steps

- Public meeting held 10/10/2018 to discuss the feasibility of forming a working group consisting of NRC staff and industry MOV experts to evaluate the data and establish acceptance criteria for crediting stem/wedge thread friction, material margins based on component attributes (size, service, material strength, etc.)
  - Criteria could be used for addressing the remainder of the valve population (e.g., rework/repair, monitor, no rework needed)
- Current status
  - Industry is collecting latest data and evaluating. Goal is to establish acceptance criteria by summer 2019 and update BWROG guidance in Revision 5
  - NRC temporary instruction currently on hold.

Browns Ferry SMB-4T Failure

- On September 24, 2017, during performance of HPCI pump test, Browns Ferry Unit 3 experienced an at-power high pressure coolant system injection into vessel.
- Cause determined to be HPCI pump discharge MOV partially open, but control room light indicated closed.
- MOV was open due to failed yoke nut.
- MOV had recently failed its quarterly stroke time test in the open direction. Code allows retest which passed.
- Erratic stroke times due to yoke nut failure caused limit switch control settings to become out of sync.

FIGURE REDACTED

14. MOV Inspection Recommendations

Inspection Recommendations

- Review plant-specific information for MOV performance and NRC inspections in preparation for inspection.
- Review MOV training material and presentations for MOV performance issues and lessons learned.
- Discuss planned inspection and technical assistance with MOV staff at headquarters for past and current issues.
- Review applicable inspection procedure (IP 62708) and guidance in IP 73758 for specific inspection activities.

Inspection Recommendations

- Discuss planned inspection with MOV engineer at plant and necessary information (such as MOV spreadsheet).
- Describe inspection scope at entrance meeting or detailed technical meeting following entrance.
- In MOV spreadsheet, evaluate MOV parameter assumptions for potential issues.
- Determine source of MOV assumptions (such as EPRI, JOG, and ComEd) and whether conditions for each source are applied.

Inspection Recommendations

- Determine adequate margin for sampled MOVs and extend sample where inadequate margin identified.
- Review diagnostic traces for sampled MOVs to evaluate adequate capability, maximum allowable, and anomalies.
- Ensure that weak link analyses assumed maximum actuator output for valve, stem, disc, spring pack, and actuator loading.
- Conduct walkdown for MOVs with emphasis on actuator, valve, and stem condition; lubrication; leakage; bolts; and T-drains.

Inspection Recommendations

- Determine whether any immediate operability concerns are identified, and whether small margin concerns are present.
- RIS 2005-20 (Rev. 2) and Inspection Manual Chapter (IMC) 0326 provide guidance for operability determinations (ODs).
- Sample corrective action evaluations and extent of condition.
- Evaluate MOV trending and operating experience lessons learned from plant and industry.
- Ensure plant personnel have adequate understanding of MOV performance and diagnostic evaluation.

Operability Determinations

- RIS 2005-20 (Rev. 2) and IMC 0326 (11/20/2017) specifies that OD should be based on reasonable expectation that SSCs are operable.
- IMC 0326 describes Tech Spec operability versus ASME OM Code criteria.
- When OM Code data outside required action range, pump or valve declared inoperable immediately because OM Code durations for analyzing data not accepted.
- For inoperable IST program pump or valve not subject to Tech Specs, action should be consistent with safety significance and system functions.
- Recalibrating instruments and repeating test is acceptable, but not before pump or valve is declared inoperable.

Inspection Areas of Interest

- Some licensees are misapplying EPRI MOV PPM data and methodology.
  - Licensee referenced EPRI PPM data as source of valve factor for some MOVs. EPRI valve testing was not intended to develop valve factor database for various valves but rather was intended to support PPM.
  - PPM applied to valve with properties not in PPM test program. NRC SER accepting EPRI PPM indicated that sufficient justification does not exist to apply EPRI gate valve computer model as design standard to other valve designs without supporting test data.

Inspection Areas of Interest

(continued)

- Some licensees are misapplying JOG test data:
  - Licensees using JOG test data to justify valve friction factor. JOG did not intend that its data be used to justify valve capability. Friction factors in JOG final program are threshold values in that if a valve tests below this value, there is a 95% confidence factor that the valve will not degrade beyond this value over time.
  - Licensees are replacing MOVs and assuming that the new valves are JOG Class A or Class B. Replacing a valve is a disqualifying event. Licensees are installing the new valve and not dynamically testing to re-qualify without justification. Reworking a valve is also a disqualifying event.
  - Licensees have used JOG data to justify valve factors via grouping.
- Licensees using static testing as basis for monitoring valve degradation with no engineering analysis or data.

Potential Cyber-Related Threats

- Currently, there are no safety-related MOV actuators approved for nuclear service with smart electronics.
- Cyber security threats would be in test and analysis systems used to set up and verify MOV operation.
- Software programs in computers used to test MOVs are controlled as M&TE equipment by QA program.
- Stand-alone nature of MOV diagnostic testing equipment makes current cyber security threat to be low.
- Licensees need to be aware of potential software threats and future use of smart electronics in actuators.

15. Sharepoint Web Site – Inspector Tools

Sharepoint site redacted

16. Special Topic: 10 CFR 50.69

10 CFR 50.69 Regulation

- License amendment may allow application of 10 CFR 50.69 for risk-informed treatment of structures, systems, and components (SSCs) as alternative to special treatment requirements (STRs) in NRC regulations.
- For example, 50.69 eliminates IST and ISI, and repair and replacement, provisions in 10 CFR 50.55a, for RISC-3 and RISC-4 SSCs.
- SECY-04-0109 included proposed final 50.69.
- SRM dated October 7, 2004, approved issuance of 50.69 with revision of proposed RISC-3 treatment.

Risk-Informed Safety Class Definitions

- RISC-1 SSCs: safety-related SSCs that perform safety significant functions.
- RISC-2 SSCs: nonsafety-related SSCs that perform safety significant functions.
- RISC-3 SSCs: safety-related SSCs that perform low safety significant functions.
- RISC-4 SSCs: nonsafety-related SSCs that perform low safety significant functions.
- Safety significant function: function whose degradation or loss could result in a significant adverse effect on defense-in-depth, safety margin, or risk.

RISC-3 and 4 STRs Eliminated

- 10 CFR Part 21.
- Portion of 10 CFR 50.46a(b) that imposes 10 CFR Part 50, Appendix B.
- 10 CFR 50.49.
- 10 CFR 50.55(e).
- IST requirements in 10 CFR 50.55a(f); ISI and repair and replacement (with exception of fracture toughness) requirements for ASME Class 2 and Class 3 SSCs in 10 CFR 50.55a(g); and electrical component quality and qualification requirements in Section 4.3 and 4.4 of IEEE 279, and Sections 5.3 and 5.4 of IEEE 603-1991, as incorporated by reference in 10 CFR 50.55a(h).

- 10 CFR 50.65, except for paragraph (a)(4).
- 10 CFR 50.72.
- 10 CFR 50.73.
- Appendix B to 10 CFR Part 50.
- Type B and Type C leakage testing requirements in both Options A and B of Appendix J to 10 CFR Part 50, for penetrations and valves meeting specific criteria.
- Appendix A to Part 100, Sections VI(a)(1) and VI(a)(2), to the extent that these regulations require qualification testing and specific engineering methods to demonstrate that SSCs are designed to withstand the Safe Shutdown Earthquake and Operating Basis Earthquake.
- NOTE: ASME BPV Code Section III requirements in 50.55a not removed.

RISC-1 and 2 SSC Treatment 10 CFR 50.69(d)(1)

- The licensee or applicant shall ensure that RISC-1 and RISC-2 SSCs perform their functions consistent with the categorization process assumptions by evaluating treatment being applied to these SSCs to ensure that it supports the key assumptions in the categorization process that relate to their assumed performance.

RISC-3 SSC Treatment
10 CFR 50.69(d)(2)

- The licensee or applicant shall ensure, with reasonable confidence, that RISC-3 SSCs remain capable of performing their safety-related functions under design-basis conditions, including seismic conditions and environmental conditions and effects throughout their service life. The treatment of RISC-3 SSCs must be consistent with the categorization process. Inspection and testing, and corrective action shall be provided for RISC-3 SSCs.

RISC-3 SSC Treatment

(continued)

(i) Inspection and testing. Periodic inspection and testing activities must be conducted to determine that RISC-3 SSCs will remain capable of performing their safety-related functions under design-basis conditions; and

(ii) Corrective action. Conditions that would prevent a RISC-3 SSC from performing its safety-related functions under design-basis conditions must be corrected in a timely manner. For significant conditions adverse to quality, measures must taken to provide reasonable confidence that the cause of the condition is determined and corrective action taken to preclude repetition.

10 CFR 50.69 Federal Register Notice

- 69 Federal Register Notice (FRN) 68008, dated Nov. 22, 2004, discusses Commission position on 10 CFR 50.69 and implementation.
- Inspectors should review FRN for guidance in preparing for 50.69 inspection.
- FRN discusses intent of STRs.
- The following slides include highlights of Commission positions on RISC-1, 2, 3, and 4 SSC treatment requirements.

FRN: Special Treatment Requirements

- Prescriptive requirements as to how licensees are to treat SSCs (e.g., safety-related) are referred to as STRs.
- STRs developed to provide greater assurance that SSCs will perform their functions under particular conditions with high quality and reliability.
- STRs include particular examination techniques, testing strategies, documentation requirements, personnel qualification requirements, and independent oversight.
- Distinction between treatment and special treatment is degree of NRC specification as to what must be implemented for particular SSCs or conditions.

FRN: RISC-1 and RISC-2 Treatment

- For RISC-1 and 2 SSCs, 50.69 maintains current regulatory requirements as adequate for design basis performance.
- 50.69(d)(1) requires sufficient treatment be applied to support credit taken for SSCs for beyond design basis events.
- In some cases, licensees might need to enhance RISC-1 and 2 SSC treatment to support credit taken in categorization process to reflect actual treatment practices and/or document performance capability.
- 50.69(e) requires monitoring and adjustment as needed based on experience.

FRN: RISC-3 Treatment

- 50.69(d)(2) imposes requirements that are intended to maintain RISC-3 SSC design-basis capability.
- Although individually RISC-3 SSCs are not significant to plant safety, they perform functions necessary in response to certain design-basis events.
- Collectively, RISC-3 SSCs can be safety significant, and it is important to maintain their design-basis functional capability.
- Maintenance of RISC-3 design-basis functionality is important to ensure defense-in-depth and safety margins maintained.
- Commission allowing greater flexibility and lower level of assurance for RISC-3 SSCs.

FRN: RISC-3 Treatment

(continued)

- Licensees need to obtain data or information sufficient to make technical judgement that RISC-3 SSCs will remain capable of performing safety-related functions under design-basis conditions, and to enable licensees to take actions to restore equipment performance consistent with corrective action requirements in 50.69.
- Rulemaking is only risk-informing scope of STRs.
- Process and requirements established in 50.69 do not extend to making changes to design-basis functional requirements of SSCs.

FRN: 69(d)(2) RISC-3 Treatment Guidance

- Although 50.49 environmental qualification requirements are removed, 10 CFR Part 50, Appendix A, requirement that electric equipment important to safety be capable of performing intended functions under environmental conditions is not eliminated.
- RISC-3 SSCs continue to be required to function under design-basis seismic conditions, but not required to be qualified by testing or specific engineering methods in accordance with 10 CFR Part 100.
- Rule allows licensee to select technically defensible method to show RISC-3 SSCs will remain functional when subject to design earthquake loads.

FRN: 69(d)(2) RISC-3 Treatment Discussion
(continued)

- 50.69(d)(2) requires RISC-3 SSC treatment to be consistent with categorization process.
- Licensee must take into account assumptions in categorization process regarding design-basis capability and reliability of RISC-3 SSCs to perform safety-related functions throughout their service life.
- Licensee responsible for addressing vendor recommendations and operational experience.
- Based on NUREG/CR-6752, simple reference to industrial practices does not provide basis to satisfy 50.69

FRN: 69(d)(2)(i) Inspection-Testing Discussion

- Licensee must implement periodic testing or inspection sufficient to provide reasonable confidence that pumps and valves will be capable of performing safety-related functions under design-basis conditions.
- Licensee will need to obtain sufficient operational information or performance data to provide reasonable confidence that RISC-3 pumps and valves will be capable of performing safety-related functions if called upon to function under operational or design-basis conditions over interval between periodic testing or inspections.
- Exercising valve or pump does not provide reasonable confidence of design-basis capability.

FRN: 69(d)(2)(ii) Corrective Action Discussion

- 50.69(d)(2)(ii) requires that conditions that would prevent RISC-3 SSC from performing safety-related functions under design-basis conditions must be corrected in timely manner.
- In case of significant conditions adverse to quality, rule requires measures be taken to provide reasonable confidence that cause of condition is determined and corrective action taken to preclude repetition.
- Significant conditions adverse to quality include common-cause concerns for multiple RISC-3 SSCs or concerns related to validity of categorization process or results.
- Effective implementation of corrective action process would include timely response to information from plant SSCs, overall plant operations, and industry generic activities that might reveal performance concerns for RISC-3 SSCs on both individual and common-cause basis.

FRN: RISC-4 Treatment

- 50.69 does not impose any new treatment requirements on RISC-4 SSCs.
- RISC-4 SSC are removed from STR scope.
- Justified in view of low safety significance.
- Any changes beyond STRs must be made per existing design change control requirements, including 50.59, as applicable.

FRN: 50.69 Implementation Inspection

- IP will incorporate inspection guidance for monitoring 50.69 implementation.
- Sample inspections of plants implementing 50.69
- Inspections will focus on implementation of categorization process.
- Inspections will also evaluate treatment under 50.69 with primary attention to programmatic and common-cause issues, including those associated with known degradation mechanisms.
- Inspections might provide operating experience information on RISC-3 SSCs for other licensees.

50.69 Guidance

- NEI 00-04 provides guidance for categorization process.
- RG 1.201 (Rev. 1) accepts NEI 00-04.
- RG 1.201 states STRs removed for RISC-3 SSCs and replaced with high-level requirements intended to provide sufficient regulatory treatment, such that SSCs are still expected to perform safety-related functions under design-basis conditions, albeit at a reduced level of assurance compared to current special treatment requirements.
- RG 1.201 states that 50.69 does not allow these RISC-3 SSCs to lose their functional capability or be removed from the facility.
- ASME OM Code, Part 29 provides general guidance on RISC-3 pump and valve treatment.

Vogtle 50.69 License Amendment

- Vogtle Units 1 and 2 licensee submitted license amendment request (August 31, 2012, and supplements) to implement 10 CFR 50.69.
- On Dec. 17, 2014, NRC issued License Amendment allowing implementation of 50.69 at Vogtle Units 1 and 2.
- SER describes NRC staff review of Vogtle 50.69 categorization process.
- NRR technical staff not involved in review of planned 50.69 treatment at Vogtle Units 1 and 2.
- Vogtle Units 1 and 2 implementing 50.69.

10 CFR 50.69 Implementation Inspection Procedure 37060

- IP 37060 (September 2011), “10 CFR 50.69 Risk-Informed Categorization and Treatment of Structures, Systems, and Components Inspection,” provides guidance for inspection of licensee programs to implement 10 CFR 50.69:
  - Verify licensee programs and procedures incorporate license amendment.
  - Verify licensee properly implements categorization process.
  - Verify that licensee properly implements alternate treatment requirements.

IP 37060 Inspection Requirements

- Review of licensee programs and procedures:
  - Categorization process
  - Process to determine SSC importance
  - Defense-in-depth maintenance
  - Safety margins
  - Evaluation of entire systems and structures
  - Integrated decision-making panel
  - RISC-1 and RISC-2 SSC treatment
  - RISC-3 alternate treatment
  - Feedback and process adjustments
  - Program documentation, change control, and records
  - Reporting

IP 37060 Inspection Requirements

(continued)

- Review of licensee 50.69 implementation:
  - SSCs properly categorized
  - Plant-specific PRA models maintained
  - Integrated, systematic categorization process
  - Defense-in-depth and safety margin maintained
  - RISC-3 SSC categorization evaluations properly performed
  - Entire systems and structures evaluated
  - Staffing of expert panel met requirements
  - RISC-1 and RISC-2 SSC treatment consistent with PRA model
  - RISC-3 alternate treatment provides reasonable confidence
  - Feedback and process adjustments
  - Documentation
  - Reporting

RISC-3 Inspection Guidance

- Confirm RISC-3 SSC treatment provides reasonable confidence of performing their safety-related functions.
- Select 1 to 3 RISC-3 SSCs from sampled systems to verify alternate treatment program implemented.
- Ensure inspection, testing and corrective action reasonable based on low risk.
- Ensure extent of conditions review where alternate treatment found deficient.
- Appendix A to Part 50 continues to apply.
- Industrial practices might not be sufficient alone for adequate technical basis of design-basis capability.
- Collectively, RISC-3 SSCs can be safety significant.

Preparation

- Review the following documents:
  - 50.69 license amendment and SER
  - *Federal Register* notice 69 FR 68008 (dated November 22, 2004) ADAMS Accession No. ML042960073
  - RG 1.201
  - Licensee procedures for categorization and treatment
- Understand categorization process and treatment
- Discuss with HQ the specific inspection areas
- Consider other documents:
  - STP August 2001 exemption
  - ASME OM Code, Part 29, Alternate Treatment of RISC-3 SSCs

Region II Vogtle 50.69 Inspection

- Region II inspection at Vogtle Units 1 and 2 Report No. 05000424 and 425/2016008, dated August 10, 2016 (ML16223A738).
- Conducted June 13 to 30, 2016.
- Reviewed program procedures and implementation activities for licensee amendment under 10 CFR 50.69
- No findings or violations.

Inspection Report Summary

- Licensee developed 50.69 program implementing procedures for categorization, alternate treatment, and feedback and adjustment processes.
- Four systems categorized: containment spray (CS), radiation monitoring (RM), essential chilled water (ECW), and component cooling water (CCW).
- Only one alternate treatment application
- Due to early implementation, licensee's 50.69 feedback and adjustment process activities were limited.

Inspection Scope

- Review of licensee's programs and procedures:
  - SSC categorization into RISC-1, 2, 3 and 4
  - SSC functional importance
  - Defense-in-depth
  - Sufficient PRA safety margins
  - Scope of SSC categorization
  - Integrated decision-making panel
  - Alternate treatment to RISC-3 SSCs
  - Treatment applied to RISC-1 and RISC-2 SSCs
  - Feedback and process adjustments
  - Program documentation, change control, and records
  - Reporting requirements

Inspection Scope

(continued)

- Review of licensee's 50.69 program implementation by sampling CS, RM, ECW, and CCW systems with focus:
  - Proper categorization of SSCs
  - Maintenance of plant-specific PRA
  - Defense-in-depth
  - Implementation of integrated, systematic categorization process
  - RISC-3 SSC categorization evaluations
  - Scope of SSC categorization
  - Integrated Decision-Making Panel (IDP) staffing
  - Alternate treatment applied to RISC-3 SSCs
  - Treatment applied to RISC-1 and RISC-2 SSCs
  - Feedback and process adjustments
  - Documentation
  - Reporting

Vogtle RISC 1 and 2 SSC Treatment

- Licensee program document provided instructions for evaluation of treatment.
- Inspectors reviewed instructions and verified evaluations required assessment of credited beyond design bases capability of RISC-1 SSCs, and assumed performance of RISC-2 SSCs.
- For reviewed systems, inspectors verified licensee was tracking evaluations of treatment applied to RISC-1 and RISC-2 SSCs, as outlined in licensee procedure required by 50.69(d)(1).

Vogtle RISC-3 SSC Treatment

- Licensee program instruction described general process for application of alternate treatment to RISC-3 SSCs.
- All RISC-3 SSCs subject to (1) treatment that ensured, with reasonable confidence, that SSCs remained capable of performing safety-related functions under design bases conditions, including seismic and environmental conditions and effects throughout service life; (2) periodic testing and inspection that ensured SSCs remained capable of performing safety-related functions; and (3) corrective action program to identify and correct, in timely manner, conditions that would prevent SSCs from performing safety-related functions. In addition, for significant conditions adverse to quality, measures must be taken to provide reasonable confidence that cause is determined and corrective actions taken to preclude repetition.

RISC-3 SSC Treatment

(continued)

- Procedure required exempted STRs be maintained until programs and processes revised to incorporate application of alternate treatment for a particular program.
- Exempted special treatment programs still under review for application of alternate treatment.
- Inspectors reviewed environmental qualification (50.49), IST (50.55a), and maintenance rule (50.65).
- EQ program procedure outlined activities to support “reasonable confidence” standard, including EPRI report 10097481, “Guidance for Accident Function Assessment for RISC-3 Components,” and required documented evaluation.
- IST program required documentation and approval.
- Alternate test plan has considered maintenance and surveillance history, as well as operational considerations.

RISC-3 SSC Treatment

(continued)

- Reviewed procedures to verify proper controls to support the "reasonable confidence" standard.
- Determined instructions in alternate treatment procedures, along with corrective action program were consistent with 50.69(d).
- Reviewed IST (50.55a) alternate treatment test plan for RISC-3 containment spray pumps.
- Verified alternate test plan was documented per IST program and appropriately considered surveillance and maintenance history, and operational consideration.
- Determined alternate test plan for CS pumps provided reasonable confidence that pumps would remain capable of performing safety-related functions per 50.69(d).

Current Vogtle 50.69 Status

- No additional inspections since IR 2016008.
- Vogtle 50.69 program currently in initial stages.
- Vogtle licensee said to be focusing on extension of test intervals rather than modifying treatment.
- Vogtle licensee said to be following general approach implemented at South Texas based on its Exemption License Amendment (2001).

10 CFR 50.69 Ongoing Activities

- Many licensees have submitted 10 CFR 50.69 license amendment requests.
- NRC has completed 50.69 license amendments for several nuclear power plants.
- REDACTED

17. Roundtable Discussion and Q/A Session

For MOV technical assistance, please contact:

Mike Farnan
Michael.Farnan@nrc.gov
301-415-1486

Tom Scarbrough
Thomas.Scarbrough@nrc.gov
301-415-2794