Chapter 5

REACTOR COOLANT SYSTEM

CONTENTS

Section	Title	Page
5.1	SUMMARY DESCRIPTION	5.1-1
5.1.1	DESIGN BASES	5.1-3
5.1.1.1	General Design Criterion 2, 1967 – Performance Standards	5.1-3
5.1.1.2	General Design Criterion 3, 1971 – Fire Protection	5.1-3
5.1.1.3	General Design Criterion 4, 1967 – Sharing of Systems	5.1-3
5.1.1.4	General Design Criterion 4, 1987 – Environmental and Dynamic Effects Design Bases	5.1-3
5.1.1.5	General Design Criterion 6, 1967 – Reactor Core Design	5.1-4
5.1.1.6	General Design Criterion 9, 1967 – Reactor Coolant Pressure Boundary	5.1-4
5.1.1.7	General Design Criterion 11, 1967 – Control Room	5.1-4
5.1.1.8	General Design Criterion 12, 1967 – Instrumentation and Controls	5.1-4
5.1.1.9	General Design Criterion 13, 1967 – Fission Process Monitors and Controls	5.1-4
5.1.1.10	General Design Criterion 15, 1967 – Engineered Safety Features Protection Systems	5.1-4
5.1.1.11	General Design Criterion 21, 1967 – Single Failure Definition	5.1-4
5.1.1.12	General Design Criterion 40, 1967 – Missile Protection	5.1-4
5.1.1.13	General Design Criterion 49, 1967 – Containment Design Basis	5.1-5
5.1.1.14	General Design Criterion 54, 1971 – Piping Systems Penetrating Containment	5.1-5
5.1.1.15	General Design Criterion 55, 1971 – Reactor Coolant Pressure Boundary Penetrating Containment	5.1-5
5.1.1.16	General Design Criterion 56, 1971 – Primary Containment Isolation	5.1-5
5.1.1.17	Reactor Coolant System Safety Function Requirements	5.1-5
5.1.1.18	10 CFR 50.49 – Environmental Qualification of Electrical Equipment Important to Safety for Nuclear Power Plants	5.1-6
5.1.1.19	10 CFR 50.55a(f) – Inservice Testing Requirements	5.1-6
5.1.1.20	10 CFR 50.55a(g) – Inservice Inspection Requirements	5.1-6
5.1.1.21	10 CFR 50.63 – Loss of All Alternating Current Power	5.1-6
5.1.1.22	10 CFR 50.48(c) – National Fire Protection Association Standard NFPA 805	5.1-7
5.1.1.23	Regulatory Guide 1.89, November 1974 – Environmental Qualification of Class 1E Equipment for Nuclear Power Plants	5.1-7
5.1.1.24	Regulatory Guide 1.97, Revision 3, May 1983 – Instrumentation for Light-Water-Cooled Nuclear Power Plants to Assess Plant	

Chapter 5

REACTOR COOLANT SYSTEM

CONTENTS

Section	Title	Page
	and Environs Conditions During and Following an Accident	5.1-7
5.1.1.25	Regulatory Guide 1.121, August 1976 – Bases for Plugging Degraded PWR Steam Generator Tubes	5.1-7
5.1.1.26	NUREG-0737 (Items II.B1, II.D.1, IIE.3.1, II.F.2, II.G.1, II.K.3.5, and II.K.3.25), November 1980 – Clarification of TMI Action Plan Requirements	5.1-7
5.1.1.27	Generic Letter 83-37, November 1983 – NUREG-0737 Technical Specifications	5.1-8
5.1.1.28	Generic Letter 88-05, March 1988 – Boric Acid Corrosion of Carbon Steel Reactor Pressure Boundary Components in PWR Plants	5.1-8
5.1.1.29	Generic Letter 90-06, June 1990 – Resolution of Generic Issue 70, "Power-Operated Relief Valve and Block Valve Reliability" and Generic Issue 94, "Additional Low-Temperature Over Pressure Protection for Light-Water Reactors" Pursuant to 10 CFR 50.54(f)	5.1-9
5.1.1.30	Generic Letter 95-07, August 1995 – Pressure Locking and Thermal Binding of Safety-Related Power-Operated Valves	5.1-9
5.1.1.31	NRC Bulletin 88-09, July 1988 - Thimble Tube Thinning in Westinghouse Reactors	5.1-9
5.1.1.32	NRC Bulletin 88-11, December 1988 - Pressurizer Surge Line Thermal Stratification	5.1-9
5.1.1.33	Branch Technical Position ASB 10-2, March 1978 - Design Guidelines for Avoiding Water Hammers in Steam Generators	5.1-9
5.1.2	SCHEMATIC FLOW DIAGRAMS	5.1-9
5.1.3	PIPING AND INSTRUMENTATION DIAGRAMS	5.1-10
5.1.4	ELEVATION DRAWINGS	5.1-10
5.1.5	REACTOR COOLANT SYSTEM COMPONENTS	5.1-10
5.1.6	REACTOR COOLANT SYSTEM PERFORMANCE AND SAFETY FUNCTIONS	5.1-10
5.1.6.1	Reactor Coolant System Flow Determination and Safety Analyses	5.1-11
5.1.6.2	Reactor Coolant Flow	5.1-12
5.1.6.3	Best Estimate Flow	5.1-12

Chapter 5

REACTOR COOLANT SYSTEM

CONTENTS

Section	Title	Page
5.1.6.4	Thermal Design Flow	5.1-12
5.1.6.5	Mechanical Design Flow	5.1-13
5.1.6.6	Minimum Measured Flow	5.1-13
5.1.6.7	Minimum Required Reactor Coolant System Flow Rate	5.1-13
5.1.7	SYSTEM OPERATION	5.1-14
5.1.7.1	Plant Startup	5.1-14
5.1.7.2	Power Generation and Hot Standby	5.1-15
5.1.7.3	Plant Shutdown	5.1-15
5.1.7.4	Refueling	5.1-16
5.1.7.5	Mid-Loop Operation	5.1-17
5.1.8	SAFETY EVALUATION	5.1-17
5.1.8.1	General Design Criterion 2, 1967 – Performance Standards	5.1-17
5.1.8.2	General Design Criterion 3, 1971 – Fire Protection	5.1-17
5.1.8.3	General Design Criterion 4, 1967 – Sharing of Systems	5.1-17
5.1.8.4	General Design Criterion 4, 1987 – Environmental and Dynamic Effects Design Bases	5.1-18
5.1.8.5	General Design Criterion 6, 1967 – Reactor Core Design	5.1-18
5.1.8.6	General Design Criterion 9, 1967 – Reactor Coolant Pressure Boundary	5.1-18
5.1.8.7	General Design Criterion 11, 1967 - Control Room	5.1-18
5.1.8.8	General Design Criterion 12, 1967 - Instrumentation and Controls	5.1-19
5.1.8.9	General Design Criterion 13, 1967 – Fission Process Monitors and Controls	5.1-19
5.1.8.10	General Design Criterion 15, 1967 – Engineered Safety Features Protection System	5.1-19
5.1.8.11	General Design Criterion 21, 1967 – Single Failure Definition	5.1-20
5.1.8.12	General Design Criterion 40, 1967 – Missile Protection	5.1-20
5.1.8.13	General Design Criterion 49, 1967 – Containment Design Basis	5.1-21
5.1.8.14	General Design Criterion 54, 1971 – Piping Systems Penetrating Containment	5.1-21
5.1.8.15	General Design Criterion 55, 1971 – Reactor Coolant Pressure Boundary Penetrating Containment	5.1-21
5.1.8.16	General Design Criterion 56, 1971 – Primary Containment Isolation	5.1-21
5.1.8.17	Reactor Coolant System Safety Function Requirements	5.1-21
5.1.8.18	10 CFR 50.49 – Environmental Qualification of Electrical	

Chapter 5

REACTOR COOLANT SYSTEM

CONTENTS

Section	Title	Page
	Equipment Important to Safety for Nuclear Power Plants	5.1-23
5.1.8.19	10 CFR 50.55a(f) – Inservice Testing Requirements	5.1-23
5.1.8.20	10 CFR 50.55a(g) – Inservice Inspection Requirements	5.1-23
5.1.8.21	10 CFR 50.63 – Loss of All Alternating Current Power	5.1-23
5.1.8.22	10 CFR 50.48(c) – National Fire Protection Association Standard NFPA 805	5.1-24
5.1.8.23	Regulatory Guide 1.89, November 1974 – Environmental Qualification of Class 1E Equipment for Nuclear Power Plants	5.1-24
5.1.8.24	Regulatory Guide 1.97, Revision 3, May 1983 - Instrumentation for Light-Water-Cooled Nuclear Power Plants to Assess Plant and Environs Conditions During and Following an Accident	5.1-24
5.1.8.25	Regulatory Guide 1.121, August 1976 – Bases for Plugging Degraded PWR Steam Generator Tubes	5.1-24
5.1.8.26	NUREG-0737 (Items II.B.1, II.D.1, II.E.3.1, II.F.2, II.G.1, II.K.3.5, and II.K.3.25), November 1980 – Clarification of TMI Action Plan Requirements	5.1-24
5.1.8.27	Generic Letter 83-37, November 1983 - NUREG-0737 Technical Specifications	5.1-26
5.1.8.28	Generic Letter 88-05, March 1988 - Boric Acid Corrosion of Carbon Steel Reactor Pressure Boundary Components in PWR Plants	5.1-26
5.1.8.29	Generic Letter 90-06, June 1990 – Resolution of Generic Issue 70, "Power-Operated Relief Valve and Block Valve Reliability" and Generic Issue 94, "Additional Low-Temperature Over Pressure Protection for Light-Water Reactors" Pursuant to 10 CFR 50.54(f)	5.1-27
5.1.8.30	Generic Letter 95-07, August 1995 – Pressure Locking and Thermal Binding of Safety-Related Power-Operated Valves	5.1-27
5.1.8.31	NRC Bulletin 88-09, July 1988 - Thimble Tube Thinning in Westinghouse Reactors	5.1-27
5.1.8.32	NRC Bulletin 88-11, December 1988 - Pressurizer Surge Line Thermal Stratification	5.1-27
5.1.8.33	Branch Technical Position ASB 10-2, March 1978 - Design Guidelines for Avoiding Water Hammers in Steam Generators	5.1.27
5.1.9	REFERENCES	5.1-27
5.1.10	REFERENCE DRAWINGS	5.1-28

CONTENTS (Continued)

Section	Title	Page
5.2	INTEGRITY OF THE REACTOR COOLANT PRESSURE BOUNDARY	5.2-1
5.2.1	DESIGN BASES	5.2-1
5.2.1.1	General Design Criterion 2, 1967 - Performance Standards	5.2-1
5.2.1.2	General Design Criterion 4, 1987 – Environmental and Dynamic Effects Design Bases	5.2-1
5.2.1.3	General Design Criterion 9, 1967 – Reactor Coolant Pressure Boundary	5.2-1
5.2.1.4	General Design Criterion 11, 1967 - Control Room	5.2-1
5.2.1.5	General Design Criterion 12, 1967 - Instrumentation and Controls	5.2-1
5.2.1.6	General Design Criterion 16, 1967 - Monitoring Reactor Coolant Pressure Boundary	5.2-2
5.2.1.7	General Design Criterion 33, 1967 – Reactor Coolant Pressure Boundary Capability	5.2-2
5.2.1.8	General Design Criterion 34, 1967 – Reactor Coolant Pressure Boundary Rapid Propagation Failure Prevention	5.2-2
5.2.1.9	General Design Criterion 35, 1967 – Reactor Coolant Pressure Boundary Brittle Fracture Prevention	5.2-2
5.2.1.10	General Design Criterion 36, 1967 – Reactor Coolant Pressure Boundary Surveillance	5.2-2
5.2.1.11	General Design Criterion 51, 1967 - Reactor Coolant Pressure Boundary Outside Containment	5.2-3
5.2.1.12	Reactor Coolant Pressure Boundary Safety Function Requirement	5.2-3
5.2.1.13	10 CFR 50.55a- Codes and Standards	5.2-3
5.2.1.14	10 CFR 50.55a(f) – Inservice Testing Requirements	5.2-3
5.2.1.15	10 CFR 50.55a(g) - Inservice Inspection Requirements	5.2-3
5.2.1.16	10 CFR 50.60 - Acceptance Criteria for Fracture Prevention Measures for Lightwater Nuclear Power Reactors for Normal Operation	5.2-3
5.2.1.17	10 CFR 50.61- Fracture Toughness Requirements for Protection against Thermal Shock Events	5.2-3
5.2.1.18	10 CFR Part 50 Appendix G- Fracture Toughness Requirements	5.2-4
5.2.1.19	10 CFR Part 50 Appendix H- Reactor Vessel Material Surveillance Program Requirements	5.2-4
5.2.1.20	Safety Guide 14, October 1971 - Reactor Coolant Pump Flywheel Integrity	5.2-4
5.2.1.21	Regulatory Guide 1.14, Revision 1, August 1975 –	

CONTENTS (Continued)

Section	Title	Page
	Reactor Coolant Pump Flywheel Integrity	5.2-4
5.2.1.22	Regulatory Guide 1.44, May 1973 – Control of the Use of Sensitized Stainless Steel	5.2-4
5.2.1.23	Regulatory Guide 1.45, May 1973 - Reactor Coolant Pressure Boundary Leakage Detection Systems	5.2-5
5.2.1.24	Regulatory Guide 1.97, Revision 3, May 1983 - Criteria for Accident Monitoring Instrumentation for Nuclear Power Plants	5.2-5
5.2.1.25	Regulatory Guide 1.99, Revision 2, May 1988 - Radiation Embrittlement of Reactor Vessel Materials	5.2-5
5.2.1.26	NUREG-0737 (Items II.B.1, II.D.1, II.D.3, II.K.2.13, and III.D.1.1), November 1980 - Clarification of TMI Action Plan Requirements	5.2-5
5.2.1.27	Generic Letter 1989-10, June 1989 - Safety-Related Motor-Operated Valve Testing and Surveillance	5.2-6
5.2.1.28	Generic Letter 1990-06, June 1990 – “Enclosure B, Resolution of Generic Issue 94 – ‘Additional Low-Temperature Overpressure Protection For Light-Water Reactors’ ”	5.2-6
5.2.2	SYSTEM DESCRIPTION	5.2-6
5.2.2.1	Design of Reactor Coolant Pressure Boundary Components	5.2-6
5.2.2.2	Overpressurization Protection	5.2-37
5.2.2.3	General Material Considerations	5.2-40
5.2.2.4	Fracture Toughness	5.2-43
5.2.2.5	Austenitic Stainless Steel	5.2-58
5.2.3	SAFETY EVALUATION	5.2-63
5.2.3.1	General Design Criterion 2, 1967 - Performance Standards	5.2-63
5.2.3.2	General Design Criterion 4, 1987 – Environmental and Dynamic Effects Design Bases	5.2-63
5.2.3.3	General Design Criterion 9, 1967 – Reactor Coolant Pressure Boundary	5.2-64
5.2.3.4	General Design Criterion 11, 1967 - Control Room	5.2-64
5.2.3.5	General Design Criterion 12, 1967 - Instrumentation and Controls	5.2-65
5.2.3.6	General Design Criterion 16, 1967 - Monitoring Reactor Coolant Pressure Boundary	5.2-65
5.2.3.7	General Design Criterion 33, 1967 - Reactor Coolant Pressure Boundary Capability	5.2-66
5.2.3.8	General Design Criterion 34, 1967 – Reactor Coolant Pressure Boundary Rapid Propagation Failure Prevention	5.2-66
5.2.3.9	General Design Criterion 35, 1967 – Reactor Coolant	

CONTENTS (Continued)

Section	Title	Page
	Pressure Boundary Brittle Fracture Prevention	5.2-67
5.2.3.10	General Design Criterion 36, 1967 – Reactor Coolant Pressure Boundary Surveillance	5.2-68
5.2.3.11	General Design Criterion 51, 1967 – Reactor Coolant Pressure Boundary Outside Containment	5.2-68
5.2.3.12	Reactor Coolant Pressure Boundary Safety Function Requirement	5.2-69
5.2.3.13	10 CFR 50.55a- Codes and Standards	5.2-69
5.2.3.14	10 CFR 50.55a(f) – Inservice Testing Requirements	5.2-69
5.2.3.15	10 CFR 50.55a(g) - Inservice Inspection Requirements	5.2-69
5.2.3.16	10 CFR 50.60 - Acceptance Criteria for Fracture Prevention Measures for Lightwater Nuclear Power Reactors for Normal Operation	5.2-71
5.2.3.17	10 CFR 50.61 - Fracture Toughness Requirements for Protection against Pressurized Thermal Shock Events	5.2-71
5.2.3.18	10 CFR Part 50 Appendix G - Fracture Toughness Requirements	5.2-71
5.2.3.19	10 CFR Part 50 Appendix H - Reactor Vessel Material Surveillance Program Requirements	5.2-71
5.2.3.20	Safety Guide 14, October 1971 - Reactor Coolant Pump Flywheel Integrity	5.2-72
5.2.3.21	Regulatory Guide 1.14, Revision 1, August 1975 – Reactor Coolant Pump Flywheel Integrity	5.2-73
5.2.3.22	Regulatory Guide 1.44, May 1973 – Control of the Use of Sensitized Stainless Steel	5.2-75
5.2.3.23	Regulatory Guide 1.45, May 1973 - Reactor Coolant Pressure Boundary Leakage Detection Systems	5.2-75
5.2.3.24	Regulatory Guide 1.97, Revision 3, May 1983 - Criteria for Accident Monitoring Instrumentation for Nuclear Power Plants	5.2-83
5.2.3.25	Regulatory Guide 1.99, Revision 2, May 1988 - Radiation Embrittlement of Reactor Vessel Materials	5.2-83
5.2.3.26	NUREG-0737 (Items II.B.1, II.D.1, II.D.3, II.K.2.13, and III.D.1.1), November 1980 - Clarification of TMI Action Plan Requirements	5.2-84
5.2.3.27	Generic Letter 1989-10, June 1989 - Safety-Related Motor-Operated Valve Testing and Surveillance	5.2-85
5.2.3.28	Generic Letter 1990-06, June 1990 – “Enclosure B, Resolution of Generic Issue 94 – ‘Additional Low-Temperature Overpressure Protection For Light-Water Reactors’”	5.2-85

CONTENTS (Continued)

Section	Title	Page
5.2.4	REFERENCES	5.2-86
5.2.5	REFERENCE DRAWINGS	5.2-89
5.3	THERMAL HYDRAULIC SYSTEM DESIGN	5.3-1
5.3.1	ANALYTICAL METHODS AND DATA	5.3-1
5.3.2	OPERATING RESTRICTIONS ON REACTOR COOLANT PUMPS	5.3-1
5.3.3	TEMPERATURE-POWER OPERATING MAP	5.3-1
5.3.4	LOAD FOLLOWING CHARACTERISTICS	5.3-1
5.3.5	TRANSIENT EFFECTS	5.3-2
5.3.6	THERMAL AND HYDRAULIC CHARACTERISTICS SUMMARY TABLE	5.3-2
5.4	REACTOR PRESSURE VESSEL AND APPURTENANCES	5.4-1
5.4.1	REACTOR PRESSURE VESSEL DESCRIPTION	5.4-1
5.4.1.1	Design Bases	5.4-1
5.4.1.2	Design Transients	5.4-1
5.4.1.3	Codes and Standards	5.4-1
5.4.1.4	Reactor Pressure Vessel Description	5.4-2
5.4.1.5	Inspection Provisions	5.4-3
5.4.2	FEATURES FOR IMPROVED RELIABILITY	5.4-4
5.4.3	PROTECTION OF CLOSURE STUDS	5.4-4
5.4.4	MATERIALS AND INSPECTIONS	5.4-4
5.4.5	SPECIAL PROCESSES FOR FABRICATION AND INSPECTION	5.4-5
5.4.5.1	Fabrication Processes	5.4-5
5.4.5.2	Tests and Inspections	5.4-5
5.4.6	QUALITY ASSURANCE SURVEILLANCE	5.4-6

CONTENTS (Continued)

Section	Title	Page
5.4.7	REACTOR PRESSURE VESSEL DESIGN DATA	5.4-7
5.4.8	REACTOR PRESSURE VESSEL EVALUATION	5.4-7
5.5	COMPONENT AND SUBSYSTEM DESIGN	5.5-1
5.5.1	REACTOR COOLANT PUMPS	5.5-1
5.5.1.1	Design Bases	5.5-1
5.5.1.2	Design Description	5.5-1
5.5.1.3	Design Evaluation	5.5-3
5.5.1.4	Tests and Inspections	5.5-8
5.5.2	STEAM GENERATORS	5.5-10
5.5.2.1	Design Bases	5.5-10
5.5.2.2	Design Description	5.5-11
5.5.2.3	Design Evaluation	5.5-12
5.5.2.4	Tests and Inspections	5.5-15
5.5.2.5	Steam Generator Tube Surveillance Program	5.4-16
5.5.3	REACTOR COOLANT PIPING	5.5-17
5.5.3.1	Design Bases	5.5-17
5.5.3.2	Design Description	5.5-17
5.5.3.3	Design Evaluation	5.5-20
5.5.3.4	Tests and Inspections	5.5-20
5.5.4	MAIN STEAM LINE FLOW RESTRICTORS	5.5-21
5.5.5	MAIN STEAM LINE ISOLATION SYSTEM	5.5-21
5.5.6	RESIDUAL HEAT REMOVAL SYSTEM	5.5-21
5.5.6.1	Design Bases	5.5-22
5.5.6.2	System Description	5.5-26
5.5.6.3	Design Evaluation	5.5-31
5.5.6.4	Safety Evaluation	5.5-32
5.5.6.5	Tests and Inspections	5.5-39
5.5.6.6	Instrumentation Applications	5.5-39
5.5.7	REACTOR COOLANT CLEANUP SYSTEM	5.5-39
5.5.8	MAIN STEAM LINE AND FEEDWATER PIPING	5.5-39

CONTENTS (Continued)

Section	Title	Page
5.5.9	PRESSURIZER	5.5-39
5.5.9.1	Design Bases	5.5-40
5.5.9.2	Design Description	5.5-40
5.5.9.3	Design Evaluation	5.5-42
5.5.9.4	Tests and Inspections	5.5-44
5.5.10	PRESSURIZER RELIEF TANK	5.5-44
5.5.10.1	Design Bases	5.5-44
5.5.10.2	Design Description	5.5-45
5.5.10.3	Design Evaluation	5.5-46
5.5.11	VALVES	5.5-46
5.5.11.1	Design Bases	5.5-46
5.5.11.2	Design Description	5.5-46
5.5.11.3	Design Evaluation	5.5-47
5.5.11.4	Tests and Inspections	5.5-47
5.5.12	SAFETY AND RELIEF VALVES	5.5-48
5.5.12.1	Design Bases	5.5-48
5.5.12.2	Design Description	5.5-48
5.5.12.3	Design Evaluation	5.5-49
5.5.12.4	Tests and Inspections	5.5-49
5.5.13	COMPONENT SUPPORTS	5.5-49
5.5.13.1	Design Bases	5.5-50
5.5.13.2	Design Description	5.5-50
5.5.13.3	Design Evaluation	5.5-52
5.5.14	REACTOR VESSEL HEAD VENT SYSTEM	5.5-52
5.5.14.1	Design Bases	5.5-52
5.5.14.2	Design Description	5.5-52
5.5.14.3	Supports	5.5-54
5.5.15	REFERENCES	5.5-54
5.5.16	REFERENCE DRAWINGS	5.5-55
5.6	INSTRUMENTATION REQUIREMENTS	5.6-1
5.6.1	REACTOR COOLANT SYSTEM	5.6-1

CONTENTS (Continued)

Section	Title	Page
5.6.1.1	Inadequate Core Cooling Instrumentation	5.6-2
5.6.1.2	Loose Parts Monitoring	5.6-3
5.6.2	RESIDUAL HEAT REMOVAL SYSTEM	5.6-3
5.6.3	REFERENCES	5.6-4

Chapter 5

TABLES

Table	Title
5.0-1	Applicable Design Basis Criteria
5.1-1	System Design and Operating Parameters
5.2-1	ASME Code Cases for Westinghouse PWR Class A Components (Historical)
5.2-2	Equipment Code and Classification List
5.2-3	Procurement Information Components Within Reactor Coolant System Boundary
5.2-4	Summary of Reactor Coolant System Design Transients
5.2-5	Stress Limits for PG&E Quality/Code Class I Loop Piping and Valves
5.2-6	Load Combinations and Stress Criteria for Primary Equipment
5.2-6a	Load Combinations and Acceptance Criteria for Replacement Primary Equipment
5.2-7	Faulted Condition Stress Limits for PG&E Quality/Code Class I Components
5.2-8	Loading Combinations and Acceptance Criteria for Primary Equipment Supports
5.2-8a	Load Combinations and Acceptance Criteria for Integrated Head Assembly (IHA)
5.2-9	Active and Inactive Valves in the Reactor Coolant Pressure Boundary
5.2-10	Reactor Coolant System Nominal Pressure Setpoints (psig)
5.2-11	Reactor Vessel Materials
5.2-12	Pressurizer, Pressurizer Relief Tanks, and Surge Line Materials
5.2-13	Reactor Coolant Pump Materials
5.2-14	Steam Generator Materials

TABLES

Table	Title
5.2-15	Reactor Coolant Water Chemistry Specification
5.2-16	Reactor Coolant Boundary Leakage Detection Systems
5.2-17	Deleted in Revision 2
5.2-17A	DCPP Unit 1 Reactor Vessel Toughness Data
5.2-17B	DCPP Unit 2 Reactor Vessel Toughness Data
5.2-18	Deleted in Revision 2
5.2-18A	Identification of Unit 1 Reactor Vessel Beltline Region Base Material
5.2-18B	Identification of Unit 2 Reactor Vessel Beltline Region Base Material
5.2-19	Deleted in Revision 2
5.2-19A	Fracture Toughness Properties of Unit 1 Reactor Vessel Beltline Region Base Material
5.2-19B	Fracture Toughness Properties of Unit 2 Reactor Vessel Beltline Region Base Material
5.2-20	Deleted in Revision 2
5.2-20A	Identification of Unit 1 Reactor Vessel Beltline Region Weld Metal
5.2-20B	Identification of Unit 2 Reactor Vessel Beltline Region Weld Metal
5.2-21	Deleted in Revision 2
5.2-21A	Fracture Toughness Properties of Unit 1 Reactor Vessel Beltline Region Weld Metal
5.2-21B	Fracture Toughness Properties of Unit 2 Reactor Vessel Beltline Region Weld Metal
5.2-22	Reactor Vessel Material Surveillance Program Withdrawal Schedule

TABLES

Table	Title
5.2-23	Reactor Coolant System Pressure Boundary Isolation Valves
5.4-1	Reactor Vessel Design Parameters (Both Units)
5.4-2	Reactor Vessel Construction Quality Assurance Program (Historical)
5.5-1	Reactor Coolant Pump Design Parameters (Both Units)
5.5-2	Reactor Coolant Pump Quality Assurance Program (Historical)
5.5-3	Steam Generator Design Data
5.5-4	Deleted in Revision 4
5.5-5	Steam Generator Quality Assurance Program (Both Units) (Historical)
5.5-6	Reactor Coolant Piping Design Parameters (Both Units)
5.5-7	Reactor Coolant Piping Quality Assurance Program (Both Units) (Historical)
5.5-8	Design Bases for Residual Heat Removal System Operation (Both Units)
5.5-9	Residual Heat Removal System Codes and Classifications (Both Unit 1 and Unit 2)
5.5-10	Residual Heat Removal System Component Data (Both Units)
5.5-11	Recirculation Loop Leakage
5.5-12	Pressurizer Design Data
5.5-13	Pressurizer Quality Assurance Program (Both Units) (Historical)
5.5-14	Pressurizer Relief Tank Design Data
5.5-15	Reactor Coolant System Boundary Valve Design Parameters

TABLES

Table	Title
5.5-16	Pressurizer Valves Design Parameters
5.5-17	Reactor Vessel Head Vent System Equipment Design Parameters

FIGURES

Figure	Title
5.1-1	Deleted in Revision 1
5.1-2	Pump Head-Flow Characteristics
5.1-2A	Safety Analysis – RCS Flow Parameters
5.2-1	Identification and Location of Beltline Region Material for the Reactor Vessel (Unit 1)
5.2-2	Reactor Coolant Loop Model for STATIC AND LOCA
5.2-2A	Reactor Coolant 4-Loop Model
5.2-3	THRUST RCL Model Showing Hydraulic Force Location
5.2-3A	Deleted in Revision 19
5.2-4	Identification and Location of Beltline Region Material for the Reactor Vessel (Unit 2)
5.2-5	Deleted in Revision 2
5.2-6	Deleted in Revision 9
5.2-7	Lower Bound Fracture Toughness A533, Grade B, Class 1
5.2-8	Transition Temperature Correlation Between K_{Id} (Dynamic) and C_v for a Series of Unirradiated Steels
5.2-9	Containment Monitor Response Time Versus Primary Leak Rate
5.2-10	Air Ejector Radiogas Monitor Response Time Versus Primary Leak Rate
5.2-11	Blowdown Liquid Monitor Response Time Versus Primary Leak Rate
5.2-12	Containment Cooling Water Liquid Monitor Response Time Versus Primary Leak Rate
5.2-13	Containment Area Monitor Response Time Versus Primary Leak Rate

FIGURES

Figure	Title
5.2-14	Containment Radiogas Monitor Count Rate Versus Primary Leak Rate after Equilibrium
5.2-15	Containment Particulate Monitor Count Rate Versus Primary Leak Rate after Equilibrium
5.2-16	Surveillance Capsule Elevation View (Unit 1)
5.2-17	Surveillance Capsule Plan View (Unit 1)
5.2-18	Surveillance Capsule Elevation View (Unit 2)
5.2-19	Surveillance Capsule Plan View (Unit 2)
5.3-1	Hot Leg, Cold Leg, and Average Reactor Coolant Loop Temperature as a Function of Percent Full Power
5.4-1	Reactor Vessel (Unit 1)
5.4-2	Reactor Vessel (Unit 2)
5.4-3	Integrated Head Assembly Seismic Support Structure Assembly
5.5-1	Reactor Coolant Controlled Leakage Pump
5.5-2	Reactor Coolant Pump Estimated Performance Characteristics
5.5-3	Reactor Coolant Pump Spool Piece and Motor Support Stand
5.5-4	Westinghouse Delta 54 Steam Generator
5.5-4A	Deleted in Revision 19
5.5-5	Deleted in Revision 19
5.5-6	Deleted in Revision 19
5.5-7	Deleted in Revision 1
5.5-8	Pressurizer

FIGURES

Figure	Title
5.5-9	Reactor Support
5.5-10	Steam Generator and Reactor Coolant Pump Supports
5.5-11	Component Supports
5.5-12	Pressurizer Support
5.5-13[a]	U1: Function Diagram, Reactor-Turbine Generator Protection
5.5-14	Schematic Flow Diagram of the Reactor Vessel Head Vent System
5.5-14A	Deleted in Revision 20
5.5-15	Deleted in Revision 20
5.5-16	Deleted in Revision 8
5.5-17[a]	U2: Function Diagram, Reactor-Turbine Generator Protection
5.5-18	Seven Nozzle RSG Outlet Flow Restrictor

NOTE:

[a] This figure corresponds to a controlled engineering drawing that is incorporated by reference into the FSAR Update. See Table 1.6-1 for the correlation between the FSAR Update figure number and the corresponding controlled engineering drawing number.

Chapter 5

APPENDICES

Title Title

5.5A Deleted in Revision 22

Chapter 5

REACTOR COOLANT SYSTEM

5.1 SUMMARY DESCRIPTION

The reactor coolant system (RCS) consists of four similar heat transfer loops connected in parallel to the reactor pressure vessel (RPV), which are located inside the containment. Each loop contains a reactor coolant pump (RCP), steam generator (SG), and associated piping and valves. The system also includes a pressurizer, a pressurizer relief tank (PRT), interconnecting piping, and instrumentation necessary for operation.

During operation, the RCS, using coolant flow provided by the RCPs, transfers heat generated in the core to the SGs where the steam that drives the turbine-generator is produced. Borated pressurized water circulates in the RCS at a flowrate and temperature consistent with the reactor core thermal-hydraulic performance requirements. The water also acts as a neutron moderator and reflector, and as a solvent for the boric acid neutron absorber used as chemical shim control.

The reactor coolant pressure boundary (RCPB) provides a barrier against the release of radioactivity generated within the reactor, and is designed to ensure a high degree of integrity throughout plant life.

RCS pressure is controlled by the pressurizer in which water and steam are maintained in equilibrium by electrical heaters or water sprays. Steam can be formed (by the heaters) or condensed (by the pressurizer spray) to minimize reactor coolant pressure variations. Spring-loaded pressurizer safety valves (PSVs) and power-operated relief valves (PORVs) are mounted on the pressurizer, and discharge to the PRT where the steam is condensed and cooled by mixing with water. Noncondensable gases (primarily) or steam can be removed from the reactor vessel closure head (RVCH) by the reactor vessel head vent system (RVHVS).

The chemical and volume control system (CVCS) is designed to avoid uncontrolled reductions in boric acid concentration or reactor coolant temperature. The reactor coolant is the core moderator, reflector, and solvent for the chemical shim. As a result, changes in coolant temperature or boric acid concentration affect the reactivity level in the core.

Whenever the RCS boron concentration is varied, good mixing is provided to ensure uniform boron concentration throughout the RCS. Coolant flow is provided by either an RCP or a residual heat removal (RHR) pump to ensure uniform mixing whenever the boron concentration is varied. Although pressurizer mixing is not achieved to the same degree, the fraction of the total RCS volume, which is in the pressurizer is small. Pressurizer spray provides homogenization of boron concentration.

Also, the distribution of flow around the system is not subject to the degree of variation that would be required to produce non-homogeneities in coolant temperature or boron concentration as a result of areas of low coolant flowrate.

The RCS design arrangement eliminates dead-ended sections and other areas of low coolant flow in which non-homogeneities in coolant temperature or boron concentration could develop.

The RCS is designed to operate within the coolant temperature change limitations.

Refer to Tables 5.5-1, 5.5-3, 5.5-6, 5.5-12, and 5.5-14 through 5.5-17 for system design pressures and temperatures.
The design basis and safety evaluation of the RCS and its associated structures, systems, and components (SSCs), with the exception of the RCPB are discussed in this section. The RCPB is discussed in Section 5.2. The following are interfacing functions and SSCs that are discussed in the identified section:

(1) Reactor and reactor core design, nuclear design, and thermal-hydraulic design are discussed in Chapter 4;

(2) The RHR system is discussed in Section 5.5.6.

(3) Emergency core cooling is discussed in Section 6.3;

(4) RCS instrumentation associated with the reactor trip system (RTS) are discussed in this section, in conjunction with Section 7.2, and other RCS instrumentation, including the reactor vessel level instrumentation system (RVLIS), are discussed in this section, in conjunction with Sections 7.3, 7.4 and 7.5;

(5) RCP seal cooling is provided by the component cooling water (CCW) system and seal injection is provided by the CVCS (refer to Sections 9.2.2 and 9.3.4, respectively);

(6) RCS inventory and volume control, in conjunction with the CVCS, is discussed in this section and, with respect to CVCS, in Section 9.3.4;

(7) RCS coolant as a solvent, in conjunction with CVCS, functions as a neutron moderator and reflector and is discussed in this section. Refer to Section 9.3.4.2.8.2.4 for discussion on chemical shim and reactor coolant makeup;

(8) Sampling of the RCS using the nuclear steam supply system (NSSS) sampling system is described in Section 9.3.2.1.

(9) Main steam flow restriction, in conjunction with the main steam system, is discussed in this section with respect to the integral flow restrictor in the SGs (refer to Sections 5.5, 10.3, and 15.4 for further discussion of the main steam flow restrictors);

(10) Main steam isolation is discussed in Section 10.3;

(11) Decay heat removal, in conjunction with Sections 10.3 and 10.4.8, is discussed in this section;

(12) The main feedwater system is discussed in Section 10.4.7, with exception of the main feedwater ring in the SGs, which is covered in this section.

5.1.1 DESIGN BASES

5.1.1.1 General Design Criterion 2, 1967 – Performance Standards

The PG&E Design Class I portion of the RCS is designed to withstand the effects of, or is protected against, natural phenomena, such as earthquakes, tornadoes, flooding, winds, tsunamis, and other local site effects.

5.1.1.2 General Design Criterion 3, 1971 - Fire Protection

The RCS is designed and located to minimize, consistent with other safety requirements, the probability and effects of fires and explosions.

5.1.1.3 General Design Criterion 4, 1967 – Sharing of Systems

The RCS and components are not shared by the Diablo Canyon Power Plant (DCPP) units unless it is shown safety is not impaired by the sharing.

5.1.1.4 General Design Criterion 4, 1987 – Environmental and Dynamic Effects Design Bases

Consideration of the dynamic effects associated with main reactor coolant loop (RCL) piping postulated pipe ruptures are excluded from the DCPP design basis with the approval of leak-before-break (LBB) methodology by demonstrating that the probability of fluid system piping rupture is extremely low under conditions consistent with the design basis for the piping.

5.1.1.5 General Design Criterion 6, 1967 – Reactor Core Design

The RCS is designed to provide decay heat removal so that fuel damage limits are not exceeded under all expected conditions of normal operation with appropriate margins for uncertainties and for transient situations which can be anticipated, including the

effects of the loss of power to recirculation pumps, tripping out of a turbine generator set, isolation of the reactor from its primary heat sink, and loss of all offsite power.

5.1.1.6 General Design Criterion 9, 1967 – Reactor Coolant Pressure Boundary

The RCS design includes provisions for the control of RCS chemistry such that the materials of construction of the pressure-retaining boundary of the RCS are protected from corrosion that might otherwise reduce the system structural integrity during its service lifetime.

5.1.1.7 General Design Criterion 11, 1967 - Control Room

The RCS is designed to or contains instrumentation and controls that support actions to maintain and control the safe operational status of the plant from the control room or from an alternate location if control room access is lost due to fire or other causes.

5.1.1.8 General Design Criterion 12, 1967 - Instrumentation and Controls

Instrumentation and controls are provided, as required, to monitor and maintain RCS variables within prescribed operating ranges.

5.1.1.9 General Design Criterion 13, 1967 – Fission Process Monitors and Controls

The RCS design includes means for monitoring and maintaining control over the fission process throughout core life and for all conditions that can reasonably be anticipated to cause variations in reactivity of the core, such as indication of position of control rods and concentration of soluble reactivity control poisons.

5.1.1.10 General Design Criterion 15, 1967 – Engineered Safety Features Protection Systems

The RCS is provided with instrumentation for sensing accident situations and initiating the operation of necessary engineered safety features (ESFs).

5.1.1.11 General Design Criterion 21, 1967 – Single Failure Definition

Portions of the RCS are designed to perform their function after sustaining a single failure. Multiple failures resulting from a single event are treated as a single failure.

5.1.1.12 General Design Criterion 40, 1967 – Missile Protection

The RCS is designed to be protected against dynamic effects and missiles that might result from plant equipment failures.

5.1.1.13 General Design Criterion 49, 1967 – Containment Design Basis

The RCS is designed so that the containment structure can accommodate, without exceeding the design leakage rate, the pressures and temperatures resulting from the largest credible energy release following a loss-of-coolant accident (LOCA), including a considerable margin for effects from metal-water or other chemical reactions that could occur as a consequence of failure of emergency core cooling systems (ECCSs).

5.1.1.14 General Design Criterion 54, 1971 – Piping Systems Penetrating Containment

The RCS piping that penetrates containment is provided with leak detection, isolation, redundancy, reliability, and performance capabilities which reflect the importance to safety of isolating this system. The piping is designed with a capability to test periodically the operability of the isolation valves and associated apparatus and to determine if valve leakage is within acceptable limits.

5.1.1.15 General Design Criterion 55, 1971 – Reactor Coolant Pressure Boundary Penetrating Containment

Each RCS line that penetrates the containment is provided with containment isolation valves (CIVs).

5.1.1.16 General Design Criterion 56, 1971 – Primary Containment Isolation

The RCS contains piping that penetrates containment and that is connected directly to the containment atmosphere. Normally closed isolation valves are provided outside containment and automatic (check) valves are provided inside containment to ensure containment integrity is maintained.

5.1.1.17 Reactor Coolant System Safety Function Requirements

(1) <u>Protection from Missiles and Dynamic Effects</u>

PG&E Design Class I RCS SSCs are designed to be protected against the effects of missiles and dynamic effects which may result from plant equipment failure.

(2) <u>Reactor Heat Removal</u>

The RCS provides sufficient heat transfer capability to transfer the heat produced during power operation, plant cooldown, cold shutdown, operational transients, and accidents.

(3) <u>RCS Thermal-Hydraulic Requirements</u>

The RCS thermal-hydraulic design provides appropriate limits on RCS pressure and ensures adequate RCP net positive suction head (NPSH).

(4) RCS Coolant Functional Properties

The RCS contains the water used as a core neutron moderator and reflector and as a solvent for chemical shim control.

(5) RCS Pressure and Volume Control

The pressurizer maintains system pressure and volume and limits pressure transients using the surge line, pressurizer (via free volume), heaters, spray, and the PORVs.

(6) Steam Flow Restriction

The RCS is designed with flow restrictors that limit the steam flow in the event of a main steam line break (MSLB) at any location on the main steam line.

(7) RCP Coastdown

The RCP is designed to mitigate a loss of RCS flow by coasting down upon a loss of motive power.

(8) Pressurizer Relief Tank

The PRT is designed to prevent collapse under a full vacuum.

5.1.1.18 10 CFR 50.49 – Environmental Qualification of Electrical Equipment Important to Safety for Nuclear Power Plants

PG&E Design Class I RCS components that require environmental qualification (EQ) are qualified to the requirements of 10 CFR 50.49.

5.1.1.19 10 CFR 50.55a(f) – Inservice Testing Requirements

RCS American Society of Mechanical Engineers (ASME) Code components are tested to the requirements of 10 CFR 50.55a(f)(4) and 10 CFR 50.55a(f)(5) to the extent practical.

5.1.1.20 10 CFR 50.55a(g) – Inservice Inspection Requirements

RCS ASME Code components are inspected to the requirements of 10 CFR 50.55a(g)(4) and 10 CFR 50.55a(g)(5) to the extent practical.

5.1.1.21 10 CFR 50.63 – Loss of All Alternating Current Power

The RCS is designed to provide: (1) cooling of the core by natural circulation of reactor coolant through the core and SGs; (2) RCS pressure control; and (3) system monitoring

in the event of a station blackout (SBO), including RCS temperature, pressurizer pressure, pressurizer level, and source range monitors.

The RCPs are capable of withstanding an SBO event without a loss of seal integrity.

5.1.1.22 10 CFR 50.48(c) – National Fire Protection Association Standard NFPA 805

The RCS is designed to meet the nuclear safety and radioactive release performance criteria of Section 1.5 of NFPA 805, 2001 Edition.

5.1.1.23 Regulatory Guide 1.89, November 1974 – Environmental Qualification of Class 1E Equipment for Nuclear Power Plants

The subcooled margin monitors (SCMMs) are designed to be environmentally qualified in accordance with the requirements of Regulatory Guide 1.89, November 1974 (refer to Section 3.11).

5.1.1.24 Regulatory Guide 1.97, Revision 3, May 1983 - Instrumentation for Light-Water-Cooled Nuclear Power Plants to Assess Plant and Environs Conditions During and Following an Accident

The RCS provides instrumentation to monitor system variables during and following an accident.

5.1.1.25 Regulatory Guide 1.121, August 1976 – Bases for Plugging Degraded PWR Steam Generator Tubes

DCPP has established criteria defining the limiting safe conditions of tube degradation of SG tubing beyond which defective tubes, as established by inservice inspection (ISI), are removed from service by installing a tube plug at each end of the tube.

5.1.1.26 NUREG-0737 (Items II.B.1, II.D.1, II.E.3.1, II.F.2, II.G.1, II.K.3.5, and II.K.3.25), November 1980 – Clarification of TMI Action Plan Requirements

Item II.B.1 - Reactor Coolant System Vents: RVCH high point vents are capable of being remotely operated from the control room.

Item II.D.1 - Performance Testing of Boiling-Water Reactors and Pressurized-Water Reactor Relief and Safety Valves (originally Recommendation 2.1.2 of NUREG-0578, July 1979): The pressurizer PORVs and PSVs are capable of operating under expected operating conditions for design-basis transients and accidents.

Item II.E.3.1 - Emergency Power Supply for Pressurizer Heaters: All four pressurizer heater groups can be supplied with power from the offsite power system when offsite power is available. In addition, power can be provided to two of the four heater groups from the standby power system through the Class 1E buses when offsite power is not available. This arrangement is adequate for establishing and maintaining natural circulation during hot standby conditions. Redundancy is provided by supplying each of the two groups of heaters from a different Class 1E bus.

Item II.F.2 - Instrumentation for Detection of Inadequate Core Cooling: Instrumentation is provided to unambiguously detect inadequate core cooling. The instrumentation includes reactor water level indication and provides an advance warning of the approach to inadequate core cooling. The instrumentation covers the full range from normal operation to the complete uncovering of the core.

Item II.G.1 - Emergency Power for Pressurizer Equipment: PORVs, PORV block valves, and pressurizer level instruments are capable of being supplied from either the offsite power system or the onsite distribution system, when offsite power is unavailable, through PG&E Design Class I motive and control components.

Item II.K.3.5 - Automatic Trip of Reactor Coolant Pumps During Loss-Of-Coolant Accident: DCPP provides alternative means to automatically trip the RCPs in response to small-break LOCAs (SBLOCAs).

Item II.K.3.25 - Effect of Loss of Alternating-Current Power on Pump Seals: RCP pump seals are designed to withstand a complete loss of alternating-current power for at least two hours.

5.1.1.27 Generic Letter 83-37, November 1983 - NUREG-0737 Technical Specifications

Item II.B.1 - Reactor Coolant System Vents: The RVHVS is designed with testing and surveillance provisions to ensure operability.

5.1.1.28 Generic Letter 88-05, March 1988 - Boric Acid Corrosion of Carbon Steel Reactor Pressure Boundary Components in PWR Plants

A comprehensive boric acid corrosion control program (BACCP) is established to address boric acid corrosion concerns associated with RCS leakage at less than Technical Specification limits.

5.1.1.29 Generic Letter 90-06, June 1990 – Resolution of Generic Issue 70, "Power-Operated Relief Valve and Block Valve Reliability" and Generic Issue 94, "Additional Low-Temperature Over Pressure Protection for Light-Water Reactors" Pursuant to 10 CFR 50.54(f)

The RCS PORVs and PORV block valves are included in the inservice testing (IST) program.

5.1.1.30 Generic Letter 95-07, August 1995 – Pressure Locking and Thermal Binding of Safety-Related Power-Operated Valves

RCS PG&E Design Class I, power-operated gate valves meet the requirements of Generic Letter 95-07, August 1995.

5.1.1.31 NRC Bulletin 88-09, July 1988 - Thimble Tube Thinning in Westinghouse Reactors

An inspection program is established to perform periodic, non-destructive examination of the incore neutron monitoring thimble tubes for the purposes of measuring and monitoring thimble tube wear.

5.1.1.32 NRC Bulletin 88-11, December 1988 - Pressurizer Surge Line Thermal Stratification

DCPP implemented a program to confirm pressurizer surge line integrity with respect to thermal stratification and striping concerns.

5.1.1.33 Branch Technical Position ASB 10-2, March 1978 - Design Guidelines for Avoiding Water Hammers in Steam Generators

The SGs are designed and demonstrated to reduce the possibility and/or consequences of feedwater hammer. The DCPP design prevents or delays water draining from the feedring following a drop in SG level and minimizes the volume of feedwater piping external to the SG which could pocket steam.

5.1.2 SCHEMATIC FLOW DIAGRAMS

Figure 3.2-7 is a schematic flow diagram of the RCS. Principal pressures, temperatures, flowrates, and coolant volume under normal full power operating conditions are listed in Table 5.1-1.

The RCPB (refer to Section 5.2) is defined as:

(1) The RPV, including the RVCH and control rod drive mechanism (CRDM) housings

(2) The reactor coolant side of the SGs

(3) RCP casings

(4) A pressurizer attached to one of the RCLs

(5) Pressurizer PSVs and PORVs

(6) The interconnecting piping, valves, and fittings between the principal components listed above

(7) The piping, fittings, and valves leading to connecting auxiliary or support systems up to and including the second isolation valve (from the high-pressure side) on each line

Piping and components designated as part of the RCS but that do not contain reactor coolant at design temperature and pressure (such as the PRT and associated piping) are outside the bounds of the RCPB.

5.1.3 PIPING AND INSTRUMENTATION DIAGRAMS

RCS piping and instrumentation are shown schematically in Figure 3.2-7.

5.1.4 ELEVATION DRAWINGS

Physical layout of the RCS is shown in the following figures:

Figures 1.2-4, 1.2-5, and 1.2-6 (plan views inside containment)
Figures 1.2-22, 1.2-24, and 1.2-28 (section views inside containment)
Figure 5.5-10 (SG and RCP supports)
Figure 5.5-11 (component supports)
Figure 5.5-12 (pressurizer support)

5.1.5 REACTOR COOLANT SYSTEM COMPONENTS

The principal RCS components are described in Sections 5.2 and 5.5. Refer to Section 5.2.2.1.15.4 for a description of the RPV, Section 5.5.1 for a description of the RCPs, Section 5.5.2 for a description of the SGs, Section 5.5.3 for a description of the RCS piping, Section 5.5.9 for a description of the pressurizer, Section 5.5.10 for a description of the PRT, and Section 5.5.12 for a description of the RCS PSVs and PORVs.

5.1.6 REACTOR COOLANT SYSTEM PERFORMANCE AND SAFETY FUNCTIONS

The RCS transfers heat from the reactor to the SGs under conditions of both forced and natural circulation flow. The heat transfer capability of the SGs is sufficient to transfer to

the steam and power conversion system (SPCS) the heat generated during normal operation and the initial phase of plant cooldown under natural circulation conditions.

The RCS, in conjunction with the reactor control and protection systems, maintains the reactor coolant at conditions of temperature, pressure, and flow adequate to protect the core from damage. The safety design requirements are to prevent conditions of high power, high reactor coolant temperature, or low reactor coolant pressure, or buildup of noncondensable gases which could interfere with core cooling, or combinations of these which could result in a departure from nucleate boiling ratio (DNBR) smaller than the applicable limit value (refer to Sections 4.4.3.3 and 4.4.4.1).

Design and performance characteristics of the RCS are provided in Table 5.1-1 and Figures 5.1-2 and 5.1-2A.

5.1.6.1 Reactor Coolant System Flow Determination and Safety Analyses

Reactor coolant flow is an important parameter in most of the non-LOCA safety analyses. Figure 5.1-2 provides a representation of how the Thermal Design Flow (TDF) and Mechanical Design Flow (MDF) were established for the DCPP original design. These values were generated based on the best estimate flow expected after start-up. The TDF, a conservatively low flow, and the MDF, a conservatively high flow, are used in various safety analyses, depending on whether low flow or high flow is conservative for each particular analysis. Figure 5.1-2A provides a representation of the relationship between the best estimate flow, the MDF, the minimum measured flow (MMF), and the TDF. The values of these parameters are presented in Table 5.1-1.

The total RCS flow assumed in the safety analyses depends on the methodology for each specific analysis. For departure from nucleate boiling (DNB) analyses that employ the Improved Thermal Design Procedure (ITDP), the MMF value is assumed directly in the analysis. In the ITDP, a random flow uncertainty of 2.4% of flow is accounted for in a statistical square root of the sum of the squares (SRSS) combination with other appropriate plant input parameter uncertainties to set the DNBR limit. For non-DNB related events or DNB events for which the ITDP is not employed, the TDF value is used.

RCS flow is measured in accordance with the surveillance frequency control program, and is compared directly to the Unit 1 and Unit 2 Technical Specification flow limits in Limiting Condition of Operation (LCO) 3.4.1c and Surveillance Requirements 3.4.1.3 and 3.4.1.4. The RCS minimum flow limits provided by the LCO and surveillance requirements include both the TDF values for each unit explicitly approved by the U.S. Nuclear Regulatory Commission (NRC) and the MMF values provided in the Unit 1 and Unit 2 cycle specific Core Operating Limits Report to ensure continued plant operation consistent with the safety analyses.

5.1.6.2 Reactor Coolant Flow

The reactor coolant flow, a major parameter in the design of the system and its components, is established using a detailed design procedure supported by operating plant performance data, by pump model tests and analysis, and by pressure drop tests and analyses of the RPV and fuel assemblies.

Evaluation of the RCS flow involves a number of parameters. RCS best estimate flow, TDF, MDF, MMF, and Minimum Required Total RCS Flow Rate are parameters established during original design and are evaluated in the safety analyses of record. Figures 5.1-2 and 5.1-2A provide a representation of these RCS flow parameters relative to original design considerations and the current safety analyses of record.

RCS flow is measured using the cold leg elbow differential pressure taps. The cold leg elbow tap flow methodology was established using Reference 2 and Reference 3.

5.1.6.3 Best Estimate Flow

The best estimate flow is the most likely value for the actual plant operating condition. The best estimate flow is used in developing the TDF and MDF. This flow is calculated based on the best estimate of the RPV, SG and piping flow hydraulic resistance, and on the best estimate of the RCP head-flow performance, with no uncertainties assigned to either the RCS component flow resistance or the pump head. The best estimate flow is calculated based on hydraulic analyses.

The best estimate flow is also used to confirm the cold leg elbow tap flow measurement while limiting the elbow flow tap measurement to a maximum value corresponding to the best estimate flow plus an allowance for the elbow tap flow repeatability uncertainty. The hydraulic analysis uncertainty is 2%, while the instrument analysis repeatability allowance is 0.4%, for a total uncertainty of 2.4%. Application of this acceptance criterion results in definition of a conservative current cycle flow, confirmed by both the elbow tap flow measurements and the best estimate hydraulic analysis.

In the event that changes are made to the plant primary side hydraulic resistance or RCP characteristics, the best estimate flow must be recalculated.

Although the best estimate flow is the most likely value to be expected in operation, more conservative flowrates are applied in the thermal and mechanical designs, as discussed in Sections 5.1.6.4 and 5.1.6.5, below. The relationship between these parameters is reflected in Figures 5.1-2 and 5.1-2A.

5.1.6.4 Thermal Design Flow

TDF is the basis for the reactor core thermal performance, the SG thermal performance, and the design plant parameters used throughout the design. To provide the required margin in the safety analyses, the TDF accounts for the uncertainties in the RPV, SG,

and piping flow resistances, RCP head, and the methods used to measure flowrate. The combination of these uncertainties, which includes a conservative estimate of the pump discharge weir flow resistance, is equivalent to increasing the initial plant design best estimate RCS flow resistance by approximately 19 percent. The intersection of this conservative flow resistance with the initial plant design best estimate pump curve established the TDF. Figures 5.1-2 and 5.1-2A illustrate the relationship of TDF to other design and operating parameters. This procedure provides a flow margin for TDF of approximately 4 percent from the best estimate flow. The TDF is the initial flow assumed for non-DNB related accident and transient analyses and DNB analyses for which the ITDP is not used. The TDF for each unit is maintained during plant operation by satisfying the minimum RCS flow requirements of Technical Specification LCO 3.4.1c. Refer to Section 4.4.4.1 for a discussion of ITDP.

Data from all operating plants have indicated that the actual flow has been well above the flow specified for the thermal design of the plant. Tabulations of important design and performance characteristics of the RCS, as provided in Table 5.1-1, are based on the TDF, as indicated.

5.1.6.5 Mechanical Design Flow

MDF is the flow used in the mechanical design of the RPV internals and fuel assemblies. To ensure that a conservatively high flow is specified, the MDF was based on a reduced system resistance (90 percent of initial plant design best estimate) and on increased pump head capability (107 percent of initial plant design best estimate). The intersection of this flow resistance with the higher pump curve established the MDF. Figures 5.1-2 and 5.1-2A illustrate the relationship of MDF to other design and operating parameters.

5.1.6.6 Minimum Measured Flow

The plant MMF, the RCS minimum measured flow, is the flow used in reactor core DNB analyses for the ITDP. The MMF is defined as the TDF plus at least one flow measurement uncertainty. The MMF value included in the Unit 1 and Unit 2 cycle specific Core Operating Limits Report allows for a measurement uncertainty error of 2.4%. The MMF for each unit is also provided in Tables 4.1-1 and 5.1-1. The MMF for each unit is maintained during plant operation by satisfying the minimum RCS flow requirements of Technical Specification LCO 3.4.1c.

5.1.6.7 Minimum Required Reactor Coolant System Flow Rate

The minimum required RCS flow rate is the RCS total flow rate limit provided for each unit in the Technical Specifications Limiting Condition of Operation (LCO) 3.4.1c and verified under Surveillance Requirements 3.4.1.3 and 3.4.1.4. These RCS total flow rate limits incorporate a measurement error of no more than 2.4%. The RCS flow rate allowable values and nominal trip setpoints reflected in Technical Specification 3.3.1, Function 10, are based on a percentage of the loop flow measured every 24 months

under Technical Specification Surveillance Requirement 3.4.1.4. This is determined using the cold leg elbow taps.

The RCS cold leg taps indicated total flow is continuously compared to the Reactor Coolant Flow-Low nominal trip setpoint (refer to Section 7.2.2.1.4). The best estimate flow (refer to Section 5.1.6.2) may not be used as a substitute for the Technical Specification 3.4.1.4 Surveillance Requirement for flow measurement.

5.1.7 SYSTEM OPERATION

Brief descriptions of normal plant operations covering plant startup, power generation and hot standby, plant shutdown, refueling, and mid-loop operation are provided below.

5.1.7.1 Plant Startup

Plant startup encompasses the operations which bring the reactor plant from cold shutdown to no-load power operating temperature and pressure.

Before plant startup, the RCLs and pressurizer are filled completely with reactor coolant to eliminate noncondensable gases. If the vacuum refill method of filling the RCS is performed, the vacuum process will remove noncondensable gases and the pressurizer will not need to be filled completely. The water contains the correct concentration of boron to maintain shutdown margin (SDM). The secondary side of the SG is filled with water to normal startup level.

Coolant temperature variation during normal operation is limited and the associated reactivity change is well within the capability of the rod control group movement. For design evaluation, the RCS heatup and cooldown transients are analyzed using a rate of temperature change equal to 100°F per hour. Over certain temperature ranges, fracture prevention criteria will impose a lower limit to heatup and cooldown rates.

The RCS is then pressurized using the low-pressure control valve and either the centrifugal charging pump (CCP3) (preferentially) or the centrifugal charging pumps (CCP1 and CCP2) to obtain the required pressure drop across the No. 1 seal of the RCPs. The pumps may then be operated intermittently in venting operations. As an alternative, a vacuum process can be used in filling the RCS. If this method is used, operating the RCPs intermittently to aid venting noncondensable gases may not be required.

During RCP operation, a charging pump and the low-pressure letdown path from the RHR system to the CVCS maintain the necessary RCS pressure. RCP operation is initiated after the required pressure differential across the No. 1 seal is achieved. The brittle fracture prevention temperature limitations of the RPV impose an upper pressure limit during low temperature operation. The charging pump supplies seal injection water for the RCP shaft seals. A nitrogen atmosphere and normal operating temperature, pressure, and water level are established in the PRT.

After venting, the RCS is pressurized, all RCPs are started, and the pressurizer heaters are energized to begin heating the reactor coolant in the pressurizer, which leads to formation of the steam bubble. If the vacuum refill method of filling the RCS is performed, a pressurizer steam bubble may be formed prior to starting the RCPs. The pressurizer liquid level is reduced until the no-load power level volume is established. During the initial heatup phase, hydrazine is added to the reactor coolant to scavenge the oxygen in the system; the heatup is not taken beyond 180°F until the oxygen level has been reduced to the specified level.

As the reactor coolant temperature increases, the pressurizer heaters are manually controlled to maintain adequate suction pressure for the RCPs.

5.1.7.2 Power Generation and Hot Standby

Power generation includes steady state operation, ramp changes not exceeding the rate of 5 percent of full power per minute, step changes of 10 percent of full power (not exceeding full power), and step load decreases with steam dump not exceeding 50 percent of full power.

During power generation, RCS pressure is maintained by the pressurizer controller at or near 2235 psig, while the pressurizer liquid level is controlled by the charging-letdown flow control of the CVCS.

When the reactor power level is less than 15 percent, the reactor power is controlled manually. At powers above 15 percent, the operator may select the automatic mode of operation. The rod motion is then controlled by the reactor control system that automatically maintains an average coolant temperature, which follows a program based on turbine load.

During hot standby operations, when the reactor is subcritical, the RCS temperature is normally maintained by steam dump to the main condenser. This is accomplished by valves in the steam line, operating in the pressure control mode, which is set to maintain the SG steam pressure, or manually. Residual heat from the core and/or operation of an RCP provides heat to overcome RCS heat losses.

5.1.7.3 Plant Shutdown

Before plant cooldown is initiated, the boron concentration in the RCS is increased to the value required for the corresponding target temperature. Subsequent reactor coolant samples are taken to verify that the RCS boron concentration is correct.

During plant cooldown, minimum SDM is maintained in accordance with requirements of the Technical Specifications. The temperature changes imposed on the RCS during its normal modes of operation do not cause any unacceptable reactivity changes.

Plant shutdown is the operation that brings the reactor plant from no-load power operating temperature and pressure to cold shutdown. During plant cooldown from hot standby to hot shutdown conditions, concentrated boric acid solution from the CVCS is added to the RCS to increase the reactor coolant boron concentration to that required for cold shutdown. If the RCS is to be opened during the shutdown, the hydrogen and fission gas in the reactor coolant is reduced by degassing the coolant in the volume control tank (VCT).

Plant shutdown is attained in two phases: first, by the combined use of the RCS and steam systems, and, second, by the RHR system. During the first phase of shutdown, residual core and reactor coolant heat are transferred to the main steam system via the SG. Steam from the SG is dumped to the main condenser or to the atmosphere. At least one RCP is kept running to ensure uniform RCS cooldown. Pressurizer heaters and spray flow are manually controlled to cool the pressurizer while maintaining the required RCP suction pressure. The plant does not permit the pressurizer to go water-solid without the RHR system and low temperature overpressure protection (LTOP) systems in service. As the pressurizer cools, the low-pressure control valve, pressurizer spray, pressurizer heaters, and the charging pumps maintain the required RCS pressure.

When the reactor coolant temperature is below approximately 350°F and the nominal pressure is less than or equal to 390 psig, the second phase of shutdown commences with the operation of the RHR system.

During the second phase of plant cooldown and during cold shutdown and refueling, the heat exchangers of the RHR system are employed. Their capability is discussed in Section 5.5.

At least one RCP (either of those in a loop containing a pressurizer spray line) is kept running until the coolant temperature is reduced in accordance with plant procedures. Pressurizer cooldown continues by initiating auxiliary spray flow from the CVCS if the RCPs are not available. Plant shutdown continues until the reactor coolant temperature is 140°F or less.

5.1.7.4 Refueling

Before removing the RVCH for refueling, the system temperature is reduced to 160°F or less, and hydrogen and fission product levels are reduced. Water level is monitored to indicate when the water level is below the top of the RVCH. Draining continues until the water level is below the RPV flange. The RVCH is then removed and the refueling cavity is flooded. Upon completion of refueling, the system is refilled for plant startup.

5.1.7.5 Mid-Loop Operation

During refueling conditions, SG nozzle dams may be used in accordance with approved plant procedures to isolate the SG U-tubes and channel heads from the RCS for inspection and maintenance. The SGs are discussed further in Section 5.5.2.

Use of SG nozzle dams requires lowering the water level in the RCS to a level below that necessary to remove the RVCH (i.e., partial drain or mid-loop operation). Mid-loop operation, when performed in accordance with approved plant procedures, is acceptable when core decay heat is less than or equal to 15.3 MWt (Reference 1). During mid-loop operation, water level is closely monitored to ensure adequate RHR pump suction and decay heat removal by the RHR system.

5.1.8 SAFETY EVALUATION

5.1.8.1 General Design Criterion 2, 1967 – Performance Standards

All RCS components are located within the PG&E Design Class I auxiliary and containment buildings. These buildings, or applicable portions thereof, are designed to withstand the effects of winds and tornadoes (refer to Section 3.3), floods and tsunamis (refer to Section 3.4), external missiles (refer to Section 3.5), earthquakes (refer to Section 3.7), and other natural phenomena, to protect RCS SSCs, ensuring their design functions will be performed.

PG&E Design Class I RCS SSCs are designed to perform their function of providing shutdown capability under Double Design Earthquake (DDE) and Hosgri Earthquake (HE) loading. The seismic requirements are defined in Sections 3.7 and 3.10, and the provisions to protect the system from seismic damage are discussed in Sections 3.7, 3.9, and 3.10.

5.1.8.2 General Design Criterion 3, 1971 - Fire Protection

The RCS is designed to meet the requirements of 10 CFR 50.48(a) and (c) (refer to Section 9.5.1).

5.1.8.3 General Design Criterion 4, 1967 – Sharing of Systems

RCP vibration monitoring is provided by field equipment mounted in instrument racks in each containment building. Vibration data from the instrument racks is collected and stored on a shared server in the common control room. The RCP vibration monitoring system does not perform a safety function, or provide a direct control function; it only provides indication and alarms in the control room. Refer to Section 5.5.1.2 for additional information on RCP vibration monitoring.

5.1.8.4 General Design Criterion 4, 1987 – Environmental and Dynamic Effects Design Bases

Detailed analysis has shown that the primary loops are highly resistant to stress corrosion cracking and high and low cycle fatigue. Based on this analysis, dynamic effects of RCS primary loop pipe breaks need not be considered in the structural design basis. Protection from the dynamic effects of the most limiting breaks of auxiliary branch lines needs to be considered. This includes RCS branch line breaks and other high energy line breaks as described in Sections 5.2.2.1.9, 5.2.2.1.10, 5.2.2.1.11, 5.2.2.1.14, 5.2.2.1.15, and 5.2.2.1.16. Refer to Section 3.6.2.1.1.1 for discussion of the LBB methodology and application to the primary loops of DCPP Unit 1 and Unit 2.

5.1.8.5 General Design Criterion 6, 1967 – Reactor Core Design

Each reactor core is designed to function throughout its design lifetime without exceeding acceptable fuel damage limits. The RCS is a reliable process and decay heat removal system that provides for this capability under all expected conditions of normal operation, with appropriate margins for uncertainties and anticipated transient situations.

5.1.8.6 General Design Criterion 9, 1967 – Reactor Coolant Pressure Boundary

The provisions for the control of water chemistry to protect the RCS from corrosion are discussed in Sections 5.2.2.3.4 and 5.5.2.3.5, and therefore ensure the RCPB is maintained.

CVCS provides RCP seal injection to ensure RCP seal integrity, and therefore maintaining the RCPB (refer to Section 9.3.4.3.21). Refer to Section 5.2.2.3 for a discussion of the RCPB materials of construction. Refer to Section 5.2.3.23.2 for leakage limits for the RCS pressure isolation valves (PIVs).

5.1.8.7 General Design Criterion 11, 1967 - Control Room

Instrumentation and controls are provided in the control room for operators to maintain the RCS within design parameters. RCS instrumentation and controls in the control room include:

(1) RCS temperature, pressure, and flow indication

(2) RCS subcooling margin and RPV level indication

(3) Pressurizer pressure, level, and temperature indication, and heater group controls and power indication

(4) PRT pressure, level, and temperature indication

(5) RCP controls and motor amps indication

(6) RCP seal flow, differential pressure, and temperature indication

(7) PORVs/PSVs discharge temperature indication

(8) PSV acoustic monitor flow indication

(9) PORV and PORV block valve, PRT valve, and RVHVS valve controls and position indication

In the event control room access is lost, instrumentation and controls required for safe shutdown, are provided outside the control room (refer to Section 7.4.2.1) at the HSP and the dedicated shutdown panel. Pressurizer heater on-off control is provided on the HSP for two backup heater groups; however, these controls are not required for safe shutdown (refer to Section 7.4.2.1.2.4). Instrumentation requirements for the RCS are discussed in Section 5.6.1.

5.1.8.8 General Design Criterion 12, 1967 - Instrumentation and Controls

RCS Instrumentation and controls are provided, as required, to monitor and maintain the RCS variables within prescribed operating ranges, and to provide post-accident monitoring (refer to Section 5.6.1 for additional information).

Monitored RCS variables include:

(1) RCS temperature

(2) RCS pressure

(3) Pressurizer pressure and level

(4) RCS flow

(5) RCP motor amps

(6) Subcooling Margin

(7) RPV level

(8) PORV and PSV position

5.1.8.9 General Design Criterion 13, 1967 – Fission Process Monitors and Controls

The RCS instrumentation monitors and provides continuous indication of RCS temperature for additional fission process information. Refer to Sections 7.7.3.3 and 9.3.4.3.7 for additional information.

5.1.8.10 General Design Criterion 15, 1967 – Engineered Safety Features Protection System

The pressurizer pressure circuit initiates safety injection (SI) when 2-out-of-4 pressurizer pressure channels read below the specified setpoint (refer to Sections 7.3.2.1 and 7.3.3.3).

5.1.8.11 General Design Criterion 21, 1967 – Single Failure Definition

The PG&E Design Class I RCS SSCs described below are designed so that a single failure will not prevent the RCS from performing its design function. Redundant Class 1E power is provided, as necessary, for PG&E Design Class I SSCs.

Redundant pressurizer PORVs function in the event of an accident (refer to Sections 5.2.2, 15.2.15, and 15.4.3).

RVHVS vent valves provide redundant capability to vent noncondensible gases from the RCS which might inhibit core cooling during natural circulation assuming a single failure (refer to Section 5.5.14.2).

The RVLIS supplements RCS pressure and temperature sensors and the SCMM in detection of inadequate core cooling (refer to Sections 5.6.1 and 7.5.2.2).

Refer to Sections 5.1.8.15, 5.1.8.16, and 6.2.4 for a discussion of the configuration of the containment isolation system (CIS).

Refer to Section 5.1.8.10 for a discussion of the pressurizer pressure circuit for initiation of SI.

Refer to Section 5.1.8.26, Items II.E.3.1 and II.G.1 for a discussion of the emergency power supplies for pressurizer equipment.

Refer to Sections 3.9 and 5.2 for a discussion of active valves.

5.1.8.12 General Design Criterion 40, 1967 – Missile Protection

There are no credible missiles generated by the failure of the RCS components that would prevent the ESFs SSCs inside containment from performing their design functions.

Precautionary measures, taken to preclude missile formation from RCP components, ensure that the pumps will not produce missiles under any anticipated accident condition (refer to Sections 5.2.3.20 and 5.5.1.3.7).

A failure of a CRDM housing sufficient to allow a control rod to be rapidly ejected from the core is not considered credible based on the precautionary measures; however, a missile shield structure is provided over the CRDMs which will block missiles which might be generated in the event of a fracture of the pressure housing of any mechanism (refer to Sections 3.5.2.1.1, 3.5.2.2.1, 3.5.2.3.1, 3.5.2.4 and 3.5.2.5).

Missiles generated by smaller components such as valves, temperature and pressure element assemblies, and pressurizer heaters are either not credible or have been shown to not impact safety functions (refer to Sections 3.5.2.1.1, 3.5.2.2.1, 3.5.2.3.1, 3.5.2.4 and 3.5.2.5).

5.1.8.13 General Design Criterion 49, 1967 – Containment Design Basis

The RCS piping routed through containment penetrations is designed and analyzed to withstand the pressures and temperatures that could result from a LOCA without exceeding the design leakage rates. Refer to Sections 3.8.2.1.3 and 6.2.4, and Table 6.2-39 for additional details.

5.1.8.14 General Design Criterion 54, 1971 – Piping Systems Penetrating Containment

The RCS CIVs required for containment closure are periodically tested for operability and leakage. Test connections are provided in the penetration and in the piping to verify valve leakage and penetration leakage are within prescribed limits. Testing of the components required for the CIS is discussed in Section 6.2.4.

5.1.8.15 General Design Criterion 55, 1971 – Reactor Coolant Pressure Boundary Penetrating Containment

The RCS penetrations that are part of the CIS include the PRT makeup and gas analyzer lines, and the RVLIS lines, which comply with the requirements of GDC 55, 1971, as described in Section 6.2.4 and Table 6.2-39. Refer to Section 9.3.6 for the nitrogen line to the PRT.

5.1.8.16 General Design Criterion 56, 1971 – Primary Containment Isolation

The RCS penetrations that are part of the CIS include the common inlet line to the PRT that accepts discharge from the various ECCS relief valves, which complies with the requirements of GDC 56, 1971, as described in Section 6.2.4 and Table 6.2-39.

5.1.8.17 Reactor Coolant System Safety Function Requirements

(1) <u>Protection from Missiles and Dynamic Effects</u>

The PG&E Design Class I RCS SSCs are protected from the effects of missiles and dynamic effects as discussed in Sections 3.5.3.1 and 3.6, respectively, and Section 5.2.

(2) <u>Reactor Heat Removal</u>

The RCS provides sufficient heat transfer capability, using coolant flow from the RCPs, to transfer the heat produced during power operation and the initial phase of plant cooldown, when the reactor is subcritical, to the steam system via the SGs.

The system provides sufficient heat transfer capability to transfer the heat produced during the subsequent phase of plant cooldown and cold shutdown to the RHR system.

The system heat removal capability under power operation and normal operational transients, including the transition from forced to natural circulation, ensures that no fuel

damage occurs within the operating bounds permitted by the reactor control and protection systems.

(3) RCS Thermal-Hydraulic Requirements

The RCS thermal-hydraulic design provides appropriate limits on RCS pressure (refer to Section 5.3.1) and ensures adequate RCP NPSH (refer to Sections 5.3.2 and 5.5.1). Refer to Section 7.7.2 for discussion of T_{avg} control.

(4) RCS Coolant Functional Properties

The RCS contains the water used as the core neutron moderator and reflector and as a solvent for chemical shim control. The system, together with the CVCS, maintains the homogeneity of soluble neutron poison concentration and controls the rate of change of coolant temperature, preventing uncontrolled reactivity changes.

(5) RCS Pressure and Volume Control

The pressurizer maintains RCS pressure and volume through the surge line during operation and limits pressure changes during transients. During plant load reduction or increase, reactor coolant volume changes are accommodated in the pressurizer via the surge line, pressurizer sprays and/or heaters, and the PORVs. Refer to Sections 5.5.9 and 5.5.12 for additional information. For RCS pressure control during a steam generator tube rupture (SGTR), refer to Section 15.4.3.

(6) Steam Flow Restriction

Each SG has an integral flow restrictor located in the steam outlet nozzle to limit the steam blowdown from the SGs in the event of a main steam line rupture. The flow restrictor consists of seven 6.03-inch ID venturi nozzles. These flow restrictors are separate from the in-line 16-inch diameter flow restrictors in the MSS described in Section 10.3.3.13 (5). The flow restrictors are discussed in detail in Sections 5.5.4 and 15.4.2.

(7) RCP Coastdown

Sufficient pump rotation inertia is provided by a flywheel, in conjunction with the impeller and motor assembly, to provide adequate RCS flow during coastdown. The flywheel inertia of the four RCPs sustains reactor coolant flow for a period of time sufficient to assure the minimum heat removal needed to prevent immediate damage to the core.

The assumption of RCP coastdown in relation to the safety analyses is discussed further in Sections 5.5.1.3.2, 15.2.5, 15.2.9, 15.3.1, 15.3.4, and 15.4.2.

(8) Pressurizer Relief Tank

The PRT and rupture disks are designed for a vacuum to prevent tank collapse if the contents cool following a discharge without nitrogen being added.

5.1.8.18 10 CFR 50.49 – Environmental Qualification of Electrical Equipment Important to Safety for Nuclear Power Plants

RCS instrumentation and control equipment required to function in a harsh environment under accident conditions is qualified to the applicable environmental conditions to ensure that they will continue to perform their PG&E Design Class I functions. Section 3.11 describes the DCPP EQ Program and the requirements for the environmental design of electrical and related mechanical equipment. The affected equipment is listed in the EQ Master List and includes junction boxes, switches, solenoid valves, valve motors, acoustic monitors, resistance temperature detectors (RTDs), differential pressure indicating switches, and pressure transmitters.

5.1.8.19 10 CFR 50.55a(f) – Inservice Testing Requirements

The PG&E Design Class I RCS components comply with the ASME Code for Operation and Maintenance of Nuclear Power Plants and are tested to the requirements of 10 CFR 50.55a(f)(4) and 10 CFR 50.55a(f)(5) to the extent practical.

5.1.8.20 10 CFR 50.55a(g) – Inservice Inspection Requirements

The PG&E Design Class I portion of the RCS ASME BPVC Section XI components are inspected to the requirements of 10 CFR 50.55a(g)(4) and 10 CFR 50.55a(g)(5) to the extent practical. Refer to Section 5.2.3.15 for ISI of the RPV and RVCH. Refer to Section 5.2.3.21 for ISI of the RCP flywheel.

5.1.8.21 10 CFR 50.63 – Loss of All Alternating Current Power

For DCPP, safe shutdown for SBO is assumed to be Mode 3. Core cooling in this mode is to be provided by natural circulation of the reactor coolant through the core and SGs, with heat removal from the SGs provided by the atmospheric steam dump valves.

The SBO event will result in RCP trip with the simultaneous loss of seal injection flow and CCW flow to the RCP, which allows hot RCS water to enter the pump bearing and seal areas. The thermal barrier heat exchanger is designed to cool the RCS water upon restoration of CCW flow using the ac standby power supply to prevent seal damage for the duration of the SBO event.

5.1.8.22 10 CFR 50.48(c) – National Fire Protection Association Standard NFPA 805

The RCS is designed to meet the nuclear safety and radioactive release performance criteria of Section 1.5 of NFPA 805, 2001 Edition (refer to Section 9.5.1).

5.1.8.23 Regulatory Guide 1.89, November 1974 – Environmental Qualification of Class 1E Equipment for Nuclear Power Plants

The SCMM is qualified in accordance with the requirements of Regulatory Guide 1.89, November 1974 (refer to Section 3.11).

5.1.8.24 Regulatory Guide 1.97, Revision 3, May 1983 - Instrumentation for Light-Water-Cooled Nuclear Power Plants to Assess Plant and Environs Conditions During and Following an Accident

RCS post-accident variables required to be monitored for meeting Regulatory Guide 1.97, Revision 3, requirements consist of: RCS soluble boron concentration; RCS cold leg water temperature; RCS hot leg water temperature; RCS pressure; core exit temperature; coolant level in the reactor; subcooling margin indication; pressurizer level; SG pressure; RCP status; PSV position; pressurizer heater status; PRT level, temperature and pressure; and CIV position (refer to Table 7.5-6).

5.1.8.25 Regulatory Guide 1.121, August 1976 – Bases for Plugging Degraded PWR Steam Generator Tubes

Regulatory Guide 1.121, August 1976 provides guidelines for establishing criteria for SG tube defects, minimum wall thickness and analytical and loading criteria for tubes exhibiting partial or complete thru-wall cracks and wastage. DCPP uses the guidance of Regulatory Guide 1.121, August 1976 to assess the limits of tube degradation criteria. DCPP procedures ensure that SG tube inspections and tube integrity assessments are conducted on the appropriate frequency as specified in the technical specifications, and that all SG tubes satisfying the tube repair criteria are plugged. Refer to Section 5.5.2.5 for a discussion of the SG tube inspection program.

5.1.8.26 NUREG-0737 (Items II.B.1, II.D.1, II.E.3.1, II.F.2, II.G.1, II.K.3.5, and II.K.3.25), November 1980 – Clarification of TMI Action Plan Requirements

Item II.B.1 - Reactor Coolant System Vents: The RVHVS can be used to remove non-condensable gases or steam from the RVCH to support natural circulation cooling by remote-manual operation from the control room (refer to Section 5.5.14).

Item II.D.1 - Performance Testing of Boiling-Water Reactors and Pressurized-Water Reactor Relief and Safety Valves (NUREG-0578, July 1979, Section 2.1.2): Refer to

Sections 3.9.2.1.7, 5.2.3.26, and 5.5.12.4 for a discussion of testing of RCS PSVs and PORVs.

Item II.E.3.1 - Emergency Power Supply for Pressurizer Heaters: All of the four pressurizer heater groups can be supplied with power from off-site power sources when they are available. In addition, power can be provided to two of the four heater groups from the Class 1E power source through the Class 1E buses when off-site power is not available. This arrangement is adequate for establishing and maintaining natural circulation during hot standby conditions. Redundancy is provided by supplying each of the two groups of heaters from a different Class 1E bus.

Plant procedures direct the operators to connect the required pressurizer heaters to the emergency buses. Loading of each Class 1E bus can be accomplished from the main control board. Procedures identify under what conditions selected loads can be shed from the Class 1E bus to prevent overloading when the pressurizer heaters are connected. The procedures also include provisions to reset the safety injection actuation signal to permit the operation of the heaters. Transfer to the power supplies can be accomplished within 1 hour after a loss of offsite power.

Devices which supply the pressurizer heaters with motive and control power from the Class 1E buses are PG&E Design Class I.

Item II.F.2 - Instrumentation for Detection of Inadequate Core Cooling: To meet the requirements for supplementing existing instrumentation, the instrumentation for detection of inadequate core cooling includes the SCMM, core exit thermocouple system, and RVLIS, which covers the range from normal operation to complete uncovering of the core. Refer to Sections 5.6.1.1 and 7.5.2.2 for further discussion.

Item II.G.1 - Emergency Power for Pressurizer Equipment: The PORVs are air-to-open, fail-closed valves. They are normally supplied by the plant air compressors. Two of the three valves have a backup supply from the nitrogen system to function on loss of air, including PG&E Design Class I high pressure accumulators which have sufficient capability to operate each valve more than 100 times after the loss of both air and nitrogen. The third PORV is not supplied with a backup motive power supply.

Each PORV is opened by a solenoid valve which is energized-to-open, spring-to-close. The circuits to the solenoid valves are supplied with redundant interlocks which prevent energization below normal operating pressures. These control circuits are powered from the redundant Class 1E station batteries.

The backup PORV air supply is PG&E Design Class I. The piping, accumulators, control power connections, and the solenoid valves are PG&E Design Class I.

The PORV block valves, including the control power connections, are powered from Class 1E buses which are served by either offsite power or the standby power supply. Each of the three valves is powered from a separate Class 1E 480-V bus.

The pressurizer level indication circuits are PG&E Design Class I. AC power for all Class 1A instrument channels is supplied from inverters which are supplied from the Class 1E buses with automatic backup from the Class 1E 125-Vdc batteries.

Item II.K.3.5 - Auto Trip of RCPs During Loss-of-Coolant Accident: The RCPs do not automatically trip on a SBLOCA as sufficient time is available for manual trip (Reference 4). Plant procedures direct the operators to manually trip the RCPs if necessary. The implementation of this item utilized the required Westinghouse Owner's Group RCP trip criteria that had been submitted by the Westinghouse Owner's Group in response to Generic Letter 83-10c, February 1983. Generic Letter 85-12, June 1985, also provided guidance concerning implementation of the approved RCP trip criteria.

Item II.K.3.25 - Effect of Loss of Alternating-Current Power on Pump Seals: The CCW system that provides cooling water to the RCP thermal barriers can be supplied from the standby power supply and its operability will not be lost with a loss of ac power.

5.1.8.27 Generic Letter 83-37, November 1983 - NUREG-0737 Technical Specifications

Item II.B.1 - Reactor Coolant System Vents: One of the two separate vent paths, consisting of at least two valves in series which are powered from Class 1E buses, is required to be operable by plant procedures. Refer to Section 5.5.14 for a description of the RVHVS.

5.1.8.28 Generic Letter 88-05, March 1988 - Boric Acid Corrosion of Carbon Steel Reactor Pressure Boundary Components in PWR Plants

The DCPP BACCP monitors and maintains the integrity of the RVCH, the RCS and its supports, and all other borated systems pressure boundary components in accordance with Generic Letter 88-05, March 1988.

The BACCP is established to minimize boric acid induced corrosion by providing for:

(1) Early detection of boric acid leaks.

(2) Thorough inspection of the surrounding areas.

(3) Proper evaluation of areas where leakage has occurred. Of special concern is any impact to ASME Code Class 1 equipment.

(4) Prompt action to mitigate the leak, perform repairs, and avoid future damage.

5.1.8.29 Generic Letter 90-06, June 1990 – Resolution of Generic Issue 70, "Power-Operated Relief Valve and Block Valve Reliability" and Generic Issue 94, "Additional Low-Temperature Over Pressure Protection for Light-Water Reactors" Pursuant to 10 CFR 50.54(f)

The pressurizer PORVs and PORV block valves are included in the scope of the IST program. The block valves are also included in the DCPP Generic Letter 89-10, June 1989, motor-operated valves (MOV) program (refer to Section 5.2.3.27). Technical Specifications ensure valves required for LTOP protection will be able to perform their design function.

5.1.8.30 Generic Letter 95-07, August 1995 – Pressure Locking and Thermal Binding of Safety-Related Power-Operated Valves

PG&E Design Class I power-operated gate valves in the RCS that were determined to be susceptible to pressure locking have been modified by drilling a hole in the high pressure side of the disk to prevent pressure locking. No power operated gate valves in the RCS were found susceptible to thermal binding.

5.1.8.31 NRC Bulletin 88-09, July 1988 - Thimble Tube Thinning in Westinghouse Reactors

The incore neutron monitoring system is inspected during each outage in accordance with plant procedures. The inspection confirms the integrity of the incore neutron monitoring system thimble tube.

5.1.8.32 NRC Bulletin 88-11, December 1988 - Pressurizer Surge Line Thermal Stratification

Analyses were performed to evaluate the stress and fatigue effects due to thermal stratification and thermal striping of the pressurizer surge lines. The fatigue evaluation determined the pressurizer surge lines meet the acceptance criteria of ASME BPVC Section III-1986.

5.1.8.33 Branch Technical Position ASB 10-2, March 1978 - Design Guidelines for Avoiding Water Hammers in Steam Generators

The SGs include top-discharge spray nozzles in the feedwater ring which reduce the possibility of steam pockets being trapped in the feedwater ring (refer to Section 5.5.2). The main feedwater piping has been designed minimizing the length of horizontal feedwater piping which could be emptied when the SG water level drops below the level of the feedwater ring (refer to Section 10.4.7.3.20).

5.1.9 REFERENCES

1. RCS Pressurization Analysis for Diablo Canyon Shutdown Scenarios, Westinghouse Technical Report, April 1997.

2. RCS Flow Measurement Using Elbow Tap Methodology at Diablo Canyon Units 1 and 2, WCAP-15113, Revision 1, Westinghouse Electric Company LLC, April 2002.

3. RCS Flow Verification Using Elbow Taps at Westinghouse 3-Loop PWRs, WCAP-14750, Revision 1, Westinghouse Electric Company, September 1999.

4. Analysis of Delayed Reactor Coolant Pump Trip during Small Loss of Coolant Accidents for Westinghouse Nuclear Steam Supply Systems, WCAP-9584, Westinghouse Electric Company LLC, August 1979.

5.1.10 REFERENCE DRAWINGS

Figures representing controlled engineering drawings are incorporated by reference and are identified in Table 1.6-1. The contents of the drawings are controlled by DCPP procedures.

5.2 INTEGRITY OF THE REACTOR COOLANT PRESSURE BOUNDARY

The RCPB is designed to accommodate the system pressures and temperatures attained under all expected modes of plant operation, including all anticipated transients, and to maintain the resulting stresses within allowable values. The system is protected from overpressure by means of pressure relieving devices as required by applicable codes and a special system for low temperature operation. Materials of construction are specified to minimize corrosion and erosion and to provide a structure and system pressure boundary that will maintain its integrity throughout the life of the plant. Inspections in accordance with Reference 8, and provisions for surveillance of critical areas to enable periodic assessment of the boundary integrity, are made.

5.2.1 DESIGN BASES

5.2.1.1 General Design Criterion 2, 1967 - Performance Standards

The RCPB is designed to withstand the effects of, or is protected against, natural phenomena such as earthquakes, tornadoes, flooding, winds, tsunamis and other local site effects.

5.2.1.2 General Design Criterion 4, 1987 – Environmental and Dynamic Effects Design Bases

Consideration of the dynamic effects associated with main RCL piping postulated pipe ruptures are excluded from the DCPP design basis with the approval of LBB methodology by demonstrating that the probability of fluid system piping rupture is extremely low under conditions consistent with the design basis for the piping systems.

5.2.1.3 General Design Criterion 9, 1967 – Reactor Coolant Pressure Boundary

The RCPB is designed and constructed so as to have an exceedingly low probability of gross rupture or significant leakage throughout its lifetime.

5.2.1.4 General Design Criterion 11, 1967 - Control Room

The RCPB is designed to or contains instrumentation and controls that support actions to maintain the safe operational status of the plant from the control room or from an alternate location if control room access is lost due to fire or other causes.

5.2.1.5 General Design Criterion 12, 1967 - Instrumentation and Controls

Instrumentation and controls are provided as required to monitor and maintain the RCPB variables within prescribed operating ranges.

5.2.1.6 General Design Criterion 16, 1967 - Monitoring Reactor Coolant Pressure Boundary

Means are provided for monitoring the RCPB to detect leakage.

5.2.1.7 General Design Criterion 33, 1967 – Reactor Coolant Pressure Boundary Capability

The RCPB is capable of accommodating without rupture, and with only limited allowance for energy absorption through plastic deformation, the static and dynamic loads imposed on any boundary components as a result of any inadvertent and sudden release of energy to the coolant.

5.2.1.8 General Design Criterion 34, 1967 – Reactor Coolant Pressure Boundary Rapid Propagation Failure Prevention

The RCPB is designed to minimize the probability of rapidly propagating type failures. Consideration is given (a) to notch-toughness properties of materials extending to the upper shelf of the Charpy transition curve, (b) to the state of the stress of materials under static and transient loadings, (c) to the quality control specified for materials and component fabrication to limit flaw sizes, and (d) to the provisions for control over service temperature and irradiation effects which may require operational restrictions.

5.2.1.9 General Design Criterion 35, 1967 – Reactor Coolant Pressure Boundary Brittle Fracture Prevention

Under conditions where RCPB system components constructed of ferritic materials may be subjected to potential loadings, such as a reactivity induced loading, service temperatures are at least 120°F above the nil ductility transition (NDT) temperature of the component material if the resulting energy release is expected to be absorbed by plastic deformation or 60°F above the NDT temperature of the component material if the resulting energy release is expected to be absorbed within the elastic strain energy range.

5.2.1.10 General Design Criterion 36, 1967 – Reactor Coolant Pressure Boundary Surveillance

RCPB components have provisions for inspection, testing, and surveillance by appropriate means to access the structural and leaktight integrity of the boundary components during their service lifetime. For the reactor vessel, a material surveillance program conforming to ASTM-E-185-66 is provided.

5.2.1.11 General Design Criterion 51, 1967 - Reactor Coolant Pressure Boundary Outside Containment

For the portion of the RCPB outside containment, appropriate features as necessary are provided to protect the health and safety of the public in case of accidental rupture in that part. Determination of the appropriateness of features such as isolation valves and additional containment include consideration of the environmental and population conditions surrounding the site.

5.2.1.12 Reactor Coolant Pressure Boundary Safety Function Requirement

(1) Protection from Missiles and Dynamic Effects

The RCPB is designed to be protected against missile and dynamic effects which may result from equipment failures.

5.2.1.13 10 CFR 50.55a- Codes and Standards

The RCPB is designed in accordance with the requirements of 10 CFR 50.55a to the extent practical.

5.2.1.14 10 CFR 50.55a(f) – Inservice Testing Requirements

RCPB ASME Code components are tested to the requirements of 10 CFR 50.55a(f)(4) and 10 CFR 50.55a(f)(5) to the extent practical.

5.2.1.15 10 CFR 50.55a(g) - Inservice Inspection Requirements

The RCPB ASME Code components are inspected to the requirements of 10 CFR 50.55a(g)(4) and 10 CFR 50.55a(g)(5) to the extent practical.

5.2.1.16 10 CFR 50.60 - Acceptance Criteria for Fracture Prevention Measures for Lightwater Nuclear Power Reactors for Normal Operation

The fracture toughness and material surveillance program requirements are implemented for the RCPB set forth in Appendices G and H to 10 CFR Part 50.

5.2.1.17 10 CFR 50.61- Fracture Toughness Requirements for Protection against Thermal Shock Events

10 CFR 50.61 specifies the calculation of projected values of the reference temperature for reactor vessel material evaluated for the highest neutron fluence expected throughout expiration of the operating license.

5.2.1.18 10 CFR Part 50 Appendix G- Fracture Toughness Requirements

The fracture toughness requirements for ferritic materials of pressure-retaining components of the RCPB are implemented to provide adequate margins of safety during any condition of normal operation, including anticipated operational occurrences and system hydrostatic tests, to which the pressure boundary may be subjected over its service lifetime.

5.2.1.19 10 CFR Part 50 Appendix H- Reactor Vessel Material Surveillance Program Requirements

A surveillance program is implemented to monitor changes in the fracture toughness properties of ferritic materials in the reactor vessel beltline region which result from exposure of these materials to neutron irradiation and the thermal environment. Under the program, fracture toughness test data are obtained from material specimens exposed in surveillance capsules, which are withdrawn periodically from the reactor vessel.

5.2.1.20 Safety Guide 14, October 1971 - Reactor Coolant Pump Flywheel Integrity

For the original reactor coolant pump (RCP) motors, missile protection, with regards to the flywheels of the RCP motors, is provided in accordance with Safety Guide 14, October 1971, with exception to the ISI requirement C.4. The ISI requirements are in accordance with Regulatory Position C.4.b of Regulatory Guide 1.14, Revision 1.

5.2.1.21 Regulatory Guide 1.14, Revision 1, August 1975 – Reactor Coolant Pump Flywheel Integrity

For replacement motor coolant pump (RCP) motors, missile protection, with regards to the flywheels, is provided in accordance with Regulatory Guide 1.14, Revision 1.

For all reactor coolant pump (RCP) motors, a program provides for the inspection of each RCP flywheel per the recommendations of Regulatory Position C.4.b of Regulatory Guide 1.14, Revision 1, with exception to the examination requirements given by Regulatory Guide 1.14, Revision 1, Positions C.4.b(1) and C.4.b(2).

5.2.1.22 Regulatory Guide 1.44, May 1973 – Control of the Use of Sensitized Stainless Steel

Regulatory Guide 1.44, May 1973, describes methods for control of the application and processing of stainless steel to avoid severe sensitization to diminish occurrences of stress corrosion cracking.

5.2.1.23 Regulatory Guide 1.45, May 1973 - Reactor Coolant Pressure Boundary Leakage Detection Systems

Leakage detection systems are designed with acceptable methods to detect and identify the location of the source of RCPB leakage.

5.2.1.24 Regulatory Guide 1.97, Revision 3, May 1983 - Criteria for Accident Monitoring Instrumentation for Nuclear Power Plants

Instrumentation is provided to monitor RCPB integrity following an accident.

5.2.1.25 Regulatory Guide 1.99, Revision 2, May 1988 - Radiation Embrittlement of Reactor Vessel Materials

Predicted change in reference temperature at nil ductility transition (ΔRT_{NDT}) values are derived for 1/4T and 3/4T (thickness) in the limiting material by using the method described in Regulatory Guide 1.99, Revision 2 (Reference 27), and the maximum fluence for the applicable service period. Methods acceptable to the U.S. Nuclear Regulatory Commission (NRC) for estimating the embrittlement of reactor vessel beltline materials is provided in Regulatory Guide 1.99, Revision 2, which was endorsed in Generic Letter 88-11, July 1988.

5.2.1.26 NUREG-0737 (Items II.B.1, II.D.1, II.D.3, II.K.2.13, and III.D.1.1), November 1980 - Clarification of TMI Action Plan Requirements

Item II.B.1 – Reactor Vessel Head Vent System: A RVHVS is provided to exhaust non-condensable gases and/or steam from the RCS that could inhibit natural circulation core cooling. The configuration of the RCS vent paths serves to minimize the probability of inadvertent or irreversible actuation while ensuring that a single failure of a vent valve power supply or control system does not prevent isolation of the vent path.

Item II.D.1 – Performance Testing of Pressurized-Water Reactor Relief and Safety Valves: PSVs and PORVs and block valves: a program has been implemented for testing to qualify RCS relief and safety valves under expected design transients.

Item II.D.3 – Valve Position Indication for PSVs and PORVs: Positive PSV and PORV position indication is provided in the control room.

Item II.K.2.13 – Thermal Mechanical Report: An analysis has been performed to evaluate the effects of high pressure injection on vessel integrity.

Item III.D.1.1 – Integrity of Systems Outside Containment Likely to Contain Radioactive Material for Pressurized-Water Reactors and Boiling Water Reactors: A program has been implemented for preventative maintenance for leakage testing and reduction of

leakage for primary systems that could contain highly radioactive fluids during a serious accident or transient.

5.2.1.27 Generic Letter 1989-10, June 1989 - Safety-Related Motor-Operated Valve Testing and Surveillance

The RCPB PG&E Design Class I and position changeable MOVs are included in the MOV Program for Generic Letter 89-10, June 1989, and associated Generic Letter 96-05, September 1996.

5.2.1.28 Generic Letter 1990-06, June 1990 – "Enclosure B, Resolution of Generic Issue 94 – 'Additional Low-Temperature Overpressure Protection For Light-Water Reactors' "

The RCPB is designed such that brittle fracture of the RPV while at low temperature, if combined with a critical crack in the reactor coolant pressure vessel welds or plate material, will not occur.

5.2.2 SYSTEM DESCRIPTION

5.2.2.1 Design of Reactor Coolant Pressure Boundary Components

The RCPB is defined as those piping systems and components that contain reactor coolant at design pressure and temperature. RCPB piping systems and components are defined as PG&E Quality/Code Class I, with the exception of those RCPB components excluded from PG&E Quality/Code Class I requirements by 10 CFR 50.55a as described in Section 3.2.2.3. With the exception of the reactor coolant sampling lines, the entire RCPB, as defined above, is located entirely within the containment structure.

The RCS boundaries are designed to accommodate the system pressures and temperatures attained under all expected modes of plant operation, including all anticipated transients, and to maintain the stresses within applicable stress limits.

5.2.2.1.1 Performance Objectives

The performance objectives of the RCS are described in Section 5.1. Equipment codes and classification of the components within the RCS boundary are listed in Table 5.2-2. Procurement information for major RCS components is provided in Table 5.2-3.

The following five operating conditions are considered in the design of the RCS:

(1) Normal Conditions

Any condition in the course of startup, operation in the design power range, hot standby and system shutdown, other than upset, emergency, faulted, or testing conditions.

(2) Upset Conditions

Any deviations from normal conditions anticipated to occur often enough that the design should include a capability to withstand the conditions without operational impairment. The upset conditions include those transients that result from any single operator error control malfunction, transients caused by a fault in a system component requiring its isolation from the system, and transients due to loss of load or power.

Upset conditions include any abnormal incidents not resulting in a forced outage and also forced outages for which the corrective action does not include any repair of mechanical damage. The estimated duration of an upset condition was included in the design specifications.

(3) Emergency Conditions

Emergency conditions are those deviations from normal conditions that require shutdown for correction of the conditions or repair of damage in the system. These conditions have a low probability of occurrence but are included to ensure that no gross loss of structural integrity results as a concomitant effect of any damage developed in the system. The total number of postulated occurrences for such events will not cause more than 25 stress cycles having an Sa value greater than that for 106 cycles from the applicable ASME BPVC Section III, fatigue design curves.

(4) Faulted Conditions

Faulted conditions are those combinations of conditions associated with extremely low probability postulated events whose consequences are such that the integrity and operability of the nuclear energy system may be impaired to the extent that considerations of public health and safety are involved. Such conditions require compliance with safety criteria as may be specified by jurisdictional authorities.

(5) Testing Conditions

Testing conditions are those tests, in addition to the hydrostatic or pneumatic tests, permitted by the ASME BPVC Section III, including leak tests or subsequent hydrostatic tests.

5.2.2.1.2 Design Parameters

The design parameters of the RCS are described in Section 5.1 and Table 5.1-1.

5.2.2.1.3 Compliance with 10 CFR 50.55a

Codes and standards applicable to RCPB components are specified in 10 CFR 50.55a. They depend on when the plant was designed and constructed. Construction permits for DCPP Unit 1 and Unit 2 were issued on April 23, 1968, and December 9, 1970, respectively. Therefore, codes and standards specified in 10 CFR 50.55a for construction permits issued before January 1, 1971, are applicable to the DCPP.

The codes, standards, and component classifications used in the design and construction of the DCPP RCPB components are shown in Table 5.2-2 and are in accordance with the applicable provisions of 10 CFR 50.55a. Where text refers to codes in general, the applicable code edition and addenda are as specified in Table 5.2-2. These design codes specify applicable surveillance requirements including allowances for normal degradation.

Although use of the normal, upset, emergency, and faulted condition terminology was introduced in codes (ASME BPVC, Section III, Summer 1968 Addenda) and standards after the code applicability date for the DCPP, analyses of RCS components in accordance with the ASME BPVC conditions (normal, upset, and faulted) have been performed for the load combinations and associated stress limits identified in Tables 5.2-5through 5.2-7.

For the RCL piping, the 1967 or 1973 versions of the B31.1 Code do not contain explicit description for the load combinations or allowable stress limits for the faulted loading conditions. As a result, the load combinations and allowable stress limits for the faulted loading conditions are provided in Table 5.2-5. The stresses due to the above conditions are combined using the equations described in two editions of the B31.1 Code (both the 1967 Code with 1971 Addendum, and the 1973 Code with Summer 1973 Addendum). The combined stresses are compared with the allowable stress limits as shown in Table 5.2-5. Valves have been designed in accordance with USAS B16.5, in general, and ASME BPVC Section VIII, for flange connections.

5.2.2.1.4 Applicable Code Cases

Application, by Westinghouse or other vendors, of the code cases in Table 5.2-1 is in accordance with ASME Code guidelines. Specific application of any of these code cases to both DCPP units has not been identified since, at the time of their fabrication, there was neither code, nor NRC requirements to maintain and update a centralized list of these code cases.

5.2.2.1.5 Design Transients

The design transients in this section and in Table 5.2-4, in general, apply to the RCPB ASME III Components. Additional, specific transient analysis which applies to individual components may be found in Section 5.2.2.1.5.6, Component Transients, and Section 5.5, Component and Subsystem Design.

To ensure the high degree of integrity of RCS equipment over the design life of the plant, fatigue evaluation is based on conservative estimates of the magnitude and frequency of temperature and pressure transients resulting from various operating conditions in the plant. To a large extent, the specific transient operating conditions to be considered for equipment fatigue analyses were determined by Westinghouse. The transients selected represent operating conditions that should be prudently anticipated during plant operation and are sufficiently severe or frequent to be of possible significance to component cyclic behavior.

The design cycles discussed herein are conservative estimates for equipment design purposes only and are not intended to be an accurate representation of actual transients or to reflect operating experience. As such, the number of occurrences specified in Table 5.2-4 is not an absolute limit, but reflect design bases assumptions. The design limit requires that the cumulative fatigue usage factor (as calculated per ASME code guidance) for the equipment or component is less than 1.0. Therefore, a higher number of occurrences may be allowable based upon evaluation of actual stresses.

A program has been established and will be maintained which includes tracking the number of cyclic or transient occurrences of Table 5.2-4 to ensure that components are maintained within their design limit unless the program demonstrates by other means that the design limit will not be exceeded.

DCPP Unit 1 and Unit 2 are licensed for LBB for the main RCL piping. LBB allows the elimination of the dynamic effects of pipe rupture from the design basis. Dynamic effects of pipe rupture are defined as missile generation, pipe whip, pipe break reaction forces, jet impingement, decompression waves within the ruptured pipe, and local pressurizations. Although the dynamic effects of pipe rupture have been eliminated from the design basis, LBB cannot be applied to: containment design, ECCS performance, and EQ of electrical and mechanical equipment. For these applications, the main RCL pipe breaks must be used. The LOCA transient included in Section 5.2.2.1.5, Design Transients, for the plant and for each component provides limiting pressure and temperature blowdown curves which were originally generated for the main loop pipe breaks. Since PG&E has applied LBB to the Reactor Coolant (main loop) piping, the LOCA transient presented herein bounds the transients which would be generated by the large branch line breaks, i.e., the Pressurizer Surge Line, the RHR Suction Line, and the Accumulator Lines.

5.2.2.1.5.1 Normal Conditions

The following five transients are considered normal conditions:

(1) Heatup and Cooldown

For design evaluation, the heatup and cooldown cases are conservatively represented by continuous heatup or cooldown at a rate of 100°F per hour, which corresponds conceivably to a heatup or cooldown rate that could only occur under upset or emergency conditions. Heatup brings the RCS from ambient to the no-load temperature and pressure conditions. Cooldown represents the reverse situation.

The limitations on heatup reflect:

(a) Criteria for prevention of nonductile failures that establish maximum permissible temperature change rates, as a function of plant pressure and temperature.

(b) Slower initial heatup rates when using pumping energy only.

(c) Interruptions in the heatup and cooldown cycles due to such factors as drawing a pressurizer steam bubble, rod withdrawal, sampling, water chemistry, and gas adjustments.

(2) Unit Loading and Unloading

The unit loading and unloading cases under automatic reactor control are conservatively represented by a continuous and uniform ramp power change of 5 percent per minute between 15 percent load and full load. This load swing is the maximum possible consistent with operation under automatic reactor control. The reactor temperature varies with load as prescribed by the temperature control system.

(3) Step Load Increase and Decrease of 10 percent of Full Power

The ±10 percent step change in load demand is a control transient that is assumed to be a change in turbine control valve opening that might be caused by disturbances in the outside electrical network. The reactor control system is designed to restore plant equilibrium without reactor trip following a ±10 percent step change in turbine load demand initiated from nuclear plant equilibrium conditions in the range between 15 and 100 percent of full load, the power range for automatic reactor control. During load change conditions, the reactor control system attempts to match turbine and reactor outputs in such a manner that peak reactor coolant temperature is minimized and reactor coolant temperature is restored to its programmed setpoint at a sufficiently slow rate to prevent an excessive change in pressurizer pressure.

Following a step load decrease in turbine load, the secondary side steam pressure and temperature initially increase since the decrease in nuclear power lags behind the step decrease in turbine load. During the same

time increment, the RCS average temperature and pressurizer pressure also increase initially. Because of the power mismatch between the turbine and reactor and the increase in reactor coolant temperature, the control system automatically inserts the control rods to reduce core power. The reactor coolant temperature is ultimately reduced from its peak value to a value below its initial equilibrium value at the beginning of the transient.

The reactor coolant average temperature setpoint changes as a function of turbine-generator load, as determined by first-stage turbine pressure measurement. Pressurizer spray causes the pressurizer pressure to decrease from its peak pressure value. At some point during the decreasing-pressure transient, the saturated water in the pressurizer begins to flash, reducing the rate of pressure decrease. Subsequently, the pressurizer heaters come on to restore the plant pressure to its normal value.

Following a step load increase in turbine load, the reverse situation occurs; i.e., the secondary side steam pressure and temperature initially decrease and the reactor coolant average temperature and pressure initially decrease. The control system automatically withdraws the control rods to increase core power. The decreasing pressure transient is reversed by actuation of the pressurizer heaters, and eventually the system pressure is restored to its normal value. The reactor coolant average temperature is raised to a value above its initial equilibrium value at the beginning of the transient.

(4) Large Step Decrease in Load

This transient applies to a step decrease in turbine load from full power of such magnitude that the resultant rapid increase in reactor coolant average temperature and secondary side steam pressure and temperature automatically initiates a secondary side steam dump system response that prevents a reactor shutdown or lifting of SG safety valves.

DCPP was originally designed to accept step load reductions from 0 to 95 percent without a reactor trip. Industry experience and operational analysis have shown a 95 percent step load decrease to be very difficult to recover from without the occurrence of a reactor trip. Therefore, the design basis load reduction transient for DCPP has been revised to a 50 percent step load reduction. However, for equipment fatigue and design purposes, the large step decrease in load transient continues to be based on a 95 percent step decrease since it results in more severe pressure and temperature changes.

(5) Steady State Fluctuations

The reactor coolant average temperature, for purposes of design, is assumed to increase or decrease at a maximum rate of 6°F in 1 minute. The temperature changes are assumed to be around the programmed value of Tavg (Tavg ±3°F). The corresponding reactor coolant pressure is assumed to vary accordingly, and thus be within 2250 ± 50 psia. It is assumed that an infinite number of these fluctuations occur during the design life of the plant.

5.2.2.1.5.2 Upset Conditions

The following seven transients are considered upset conditions:

(1) Loss of Load Without Immediate Turbine or Reactor Trip

This transient applies to a step decrease in turbine load from full power occasioned by the loss of turbine load without immediately initiating a reactor trip and represents the most severe transient on the RCS. The reactor and turbine eventually trip as a consequence of a high pressurizer level trip initiated by the reactor protection system (RPS). Since redundant means of tripping the reactor are provided as a part of the RPS, transients of this nature are not expected but are included to ensure a conservative design.

(2) Loss of Power

This transient involves the loss of outside electrical power to the station with a reactor and turbine trip. Under these circumstances, the RCPs are de-energized and, following their coastdown, natural circulation is established in the system to some equilibrium value. This condition permits removal of core residual heat through the SGs that are being fed by the auxiliary feedwater system (AFWS) powered either by a diesel generator or main steam. Steam is initially removed for reactor cooldown through atmospheric dump valves provided for this purpose.

(3) Partial Loss of Flow

This transient applies to a partial loss of flow accident from full power in which a RCP is tripped as a result of a loss of power to the pump. The consequences of such an accident are a reactor and turbine trip on low reactor coolant flow followed by automatic opening of the steam dump system and flow reversal in the affected loop. The flow reversal results in a reactor coolant at cold leg temperature, being passed through the SG and cooled still further. This cooler water then passes through the hot leg piping and enters the reactor vessel outlet nozzles. The net result of the

flow reversal is a sizable reduction in the hot leg coolant temperature of the affected loop.

(4) Reactor Trip from Full Power

A reactor trip from full power may occur for a variety of causes resulting in RCS and SG secondary side temperature and pressure transients. It results from continued heat transfer from the reactor coolant to the SG. The transient continues until the reactor coolant and SG secondary side temperatures are in equilibrium at zero power conditions. A continued supply of feedwater and controlled dumping of secondary steam remove the core residual heat and prevent the SG safety valves from lifting. The reactor coolant temperatures and pressures undergo a rapid decrease from full power values as the RPS causes the control rods to move into the core.

(5) Inadvertent Auxiliary Spray

The inadvertent pressurizer auxiliary spray transient will occur if the auxiliary spray valve is opened inadvertently during normal operation. This will introduce cold water into the pressurizer causing a very sharp pressure decrease.

Auxiliary spray water temperature depends on regenerative heat exchanger performance. The most conservative case occurs when the letdown stream is shut off and unheated charging fluid enters the pressurizer.

The design assumes a spray water temperature of 100°F and a flowrate of 200 gpm. It is also assumed that, if activated, the auxiliary spray will continue for 5 minutes until shut off.

The pressure decreases rapidly to the low-pressure reactor trip point and the pressurizer low-pressure reactor trip is assumed to be actuated. This accentuates the pressure decrease until the pressure is finally limited to the hot leg saturation pressure. After 5 minutes the spray is stopped and the pressurizer heaters return the pressure to 2250 psia.

For design purposes, it is assumed that RCS temperature changes do not occur as a result of auxiliary spray initiation except in the pressurizer.

(6) Design Earthquake (DE)

The DE loads are a part of the mechanical loading conditions specified in equipment specifications. The origin of their determination is separate and distinct from those transient loads resulting from fluid pressure and

temperature. Their magnitude is considered in the fatigue design analysis for comparison with appropriate stress limits.

(7) RCS Cold Overpressurization

RCS cold overpressurization may occur during startup and shutdown conditions at low temperature, with or without the existence of a steam bubble in the pressurizer. The event is inadvertent, and can potentially occur by any one of a variety of malfunctions or operator errors. The function of the cold overpressure mitigation system (COMS), also known as the LTOP system, is twofold:

1. To provide RCS pressure relief capability to maintain RCS pressure below the limit based on the more limiting of; the fracture toughness requirements of Appendix G of 10 CFR Part 50 for the reactor vessel at low RCS temperatures, or the maximum RCS pressure requirements as dictated by the PORV discharge piping limits.
2. To comply with the minimum RCS pressure constraint consistent with RCP No. 1 seal integrity. This limit is of concern after COMS is actuated (i.e., a PORV opens) and the transient pressure decreases to its minimum value.

All LTOP events can be categorized as belonging to either of the two following transient mechanisms:

1. Events resulting in the addition of mass (mass input transient), or
2. Events resulting in the input of heat (heat input transient).

Umbrella cases of the temperature and pressure transients that can occur from each mechanism are provided for use in the component design.

5.2.2.1.5.3 Emergency Conditions

No transient is classified as an emergency condition.

5.2.2.1.5.4 Faulted Conditions

The following transients are considered faulted conditions:

(1) RCPB Pipe Break

This accident involves the postulated rupture of a pipe within the RCPB. It is conservatively assumed that system pressure is reduced rapidly and the ECCS is initiated to introduce water into the RCS. The SI signal will also initiate a turbine and reactor trip.

(2) Steam Line Break

For RCS component evaluation, the following conservative conditions are considered:

(a) The reactor is initially in hot, zero power subcritical condition assuming all rods in, except the most reactive rod, which is assumed to be stuck in its fully withdrawn position.

(b) A steam line break occurs inside the containment.

(c) Subsequent to the break, there is no return to power and the reactor coolant temperature cools down to 212°F.

(d) The ECCS pumps restore the reactor coolant pressure.

The above conditions result in the most severe temperature and pressure variations that the component will encounter during a steam line break accident.

(3) Double Design Earthquake

The mechanical stress resulting from the DDE is considered for each component. The seismic analysis is described in Section 3.7.

(4) Hosgri Earthquake

The mechanical stress resulting from the HE is considered for each component. The seismic analysis is described in Section 3.7.

The design transients and the number of occurrences of each are shown in Table 5.2-4.

5.2.2.1.5.5 Preoperational Tests and Condition Transients

The following hydrostatic tests and leak test conditions were considered in RCS component fatigue evaluations. In some instances, these tests were conducted prior to plant startup.

(1) Turbine Roll Test

This test was imposed upon the plant during the hot functional test period for turbine cycle checkout. RCP power heats the reactor coolant to operating temperature and the steam generated is used to perform a turbine roll test. Plant cooldown during the test exceeds, however, the 100°F per hour maximum rate.

(2) Hydrostatic and Leak Test Conditions

Each of the major NSSS components (SG, RCPs, reactor vessel, CRDMs, loop piping and pressurizer) may be subjected to a maximum of 10 hydrostatic tests without exceeding ASME BPVC criteria.

The pressure tests are:

(a) Primary Side Hydrostatic Test Before Initial Startup

Pressure tests include both shop and field hydrostatic tests that occur as a result of component or system testing. This hydrostatic test was performed prior to initial fuel loading at a water temperature of at least 168°F (calculated using the methods presented in Paragraph NB2300 of ASME BPVC Section III-1971, Summer 1972 Addenda), which is compatible with reactor vessel fracture prevention criteria requirements, and a maximum test pressure. In this test, the primary side of the SG is pressurized to 1.25 times design pressure (3107 psig) coincident with no pressurization of the secondary side.

(b) Secondary Side Hydrostatic Test Before Initial Startup

The secondary side of the SG is pressurized to 1357 psig (1.25 times the design pressure of the secondary side) coincident with the primary side at zero psig.

(c) Primary Side Leak Test

Each time the primary system is opened, a leak test will be performed. During this test the primary system pressure is assumed, for design purposes, to be raised to 2500 psia, with the system temperature above design transition temperature, while the system is checked for leaks.

In actual practice, the primary system is pressurized to less than 2500 psia to prevent the PSVs from lifting during the leak test. The secondary side of the SG is pressurized by closing off the steam lines, so that the pressure differential across the tubesheet does not exceed 1600 psi.

(d) Secondary Side Leak Test

During the life of the plant it may be necessary to check the SG secondary side, particularly the manway closure, for leakage. For design purposes, the secondary side is assumed to be pressurized

just below 1085 psig (the design pressure of the secondary side of the SG) to prevent the main steam safety valves from lifting. The primary side will also be pressurized so as to not exceed a differential pressure of 670 psi.

(e) Tube Leakage Test

During the life of the plant it may be necessary to check the SG for tube leakage and tube-to-tube sheet leakage. This is done by visual inspection of the underside (channel head side) of the tube sheet for water leakage, with the secondary side pressurized. Tube leakage tests are performed during plant cold shutdown.

For these tests, the secondary side of the SGs is pressurized with water, initially at a very low pressure, and the primary system remains depressurized (i.e., 0 psig). The underside of the tube sheet is examined visually for leaks. If any leaks are observed, the secondary side is depressurized and repairs made by tube plugging. The secondary side is then repressurized (to a higher pressure) and the underside of the tube sheet is again checked for leaks. The process is repeated until all the leaks are repaired. The maximum (final) secondary-side test pressure reached is 840 psig.

The total number of tube leakage tests considered as part of the SG design is 800 during the life of the component. The following is a breakdown of the anticipated number of occurrences at each secondary side pressure.

Case	Test Pressure, psig	No. of Occurrences
Case 1	200	400
Case 2	400	200
Case 3	600	120
Case 4	840	80

Both the primary and secondary sides of the SGs will be at ambient temperature during these tests.

Since the tests outlined under items (a) and (b) occur prior to plant startup, the number of cycles is independent of other operating plant conditions.

5.2.2.1.5.6 Component Transients

The following transients apply to the components listed, and are provided to clarify the specific transient applicable to the component.

(1) Steam Generator Evaluation

Hot standby operation / feedwater cycling is a normal transient which occurs when the plant is being maintained at hot standby or no load conditions. It is assumed that the low steam generation rate is made up by intermittent slug feeding of 32°F feedwater into the SG. Feedwater additions required during plant heatup and cooldown are also assumed to be covered by the feedwater cycling transient, but with no increase in the total number of cycles.

The fatigue analysis for the SG design also considers a one-time upset event where 32° F feedwater is introduced to a hot, dried-out secondary side of the SG.

(2) Pressurizer Evaluation

Normal heatup cases, as mentioned in Section 5.2.2.1.5.1, are conservatively represented by continuous operation at a uniform temperature rate of 100ºF per hour. In actual practice, the rate of temperature change is lower because of other limitations such as material considerations, use of RCP for heatup, or interruptions during normal startup operations to draw a steam bubble, etc. For the pressurizer, the design cooldown rate is 200ºF per hour.

Following any large change in boron concentration in the RCS, the pressurizer spray is operated to equalize concentration between the loops and the pressurizer. This can be done by manually operating the pressurizer backup heaters, thus causing a pressure increase and initiation of spray flow. The pressurizer pressure increases initially before being returned to nominal pressure by the proportional spray. The pressure is then maintained at nominal pressure by spray operation, matching the heat input from the backup heaters until the concentration is equalized. The only effects of these operations on the primary system are as follows:

1. The reactor coolant pressure varies in step with the pressurizer pressure.
2. The pressurizer surge line nozzle at the hot leg will experience the thermal shocks associated with outflow from the pressurizer

5.2.2.1.6 Identification of Active Pumps and Valves

Pumps and valves are classified as either active or inactive components for faulted conditions. Active components are those whose operability is relied upon to perform a PG&E Design Class I function as described in Section 3.2.2.1. Inactive components are those whose operability (e.g., valve opening or closure, pump operation or trip) is not relied upon to perform a PG&E Design Class I function. The RCPs are the only pumps in the RCS boundary and are classified as "inactive" in the event of a RCL pipe rupture.

Valves in sample lines are not considered to be part of the RCS boundary because the nozzles where these lines connect to the RCS are orificed to a 3/8-inch hole. This hole restricts the flow such that loss through a severance of one of these lines is sufficiently

small to allow operators to execute an orderly plant shutdown (refer to Section 9.3.2 for description of the portion of the sample lines that are part of the RCPB).

Table 5.2-9 lists the active and inactive valves between major components in the main process lines of the RCPB, along with the actuation type, valve types, and location. The listed valves are those that are within the RCPB. Check valves are also included in Table 5.2-9. Check valves are a credited means of pressure boundary isolation for the original design. Vents, drains, test and instrument root valves are excluded from the table as they meet the isolation requirements and are not between major components of the RCPB. Manual valves are passive components and are not considered either active or inactive, therefore they are not included on Table 5.2-9.

5.2.2.1.7 Design of Active Pumps and Valves

The design criteria for active PG&E Design Class I pumps outside the RCS boundary are discussed in Section 3.9.2. All these PG&E Design Class I pumps are designated either PG&E Quality/Code Class II or III.

The valves were designed to function at normal operating conditions, maximum design conditions, and DDE/Hosgri conditions. Active valves that are used for accident mitigation only, and do not serve to support safe shutdown following a HE, were qualified for active function for a HE to provide increased conservatism in accordance with Reference 30. The design meets the requirements of the ANSI B31.1, ANSI B16.5, and MSS-SP-66 codes (refer to Table 5.2-2).

The stress limits for the valves in the RCS pressure boundary are indicated in Table 5.2-5.

In addition, all valves 1 inch and larger within the RCPB were checked for wall thickness to ANSI B16.5, MSS-SP-66, or ASME BPVC Section III-1968 (some 1974) requirements, as applicable, and subjected to nondestructive tests in accordance with ASME and American Society for Testing and Materials (ASTM) codes.

The valves were designed to the requirements of ANSI B16.5 or MSS-SP-66 pertaining to minimum wall thickness for pressure containing components. Analyses were performed to qualify active valves.

HISTORICAL INFORMATION IN ITALICS BELOW NOT REQUIRED TO BE REVISED

These valves were subjected to a series of stringent tests prior to service and during the plant life. Prior to installation, the following tests were performed: shell hydrostatic tests to MSS-SP-61 requirements, backseat and main seat leakage tests. Cold hydrostatic tests, hot functional qualification tests, periodic ISIs and operability tests have been and are performed to verify and assure the functional ability of the valves. These tests assure reliability of the valves for the design life of the plant.

On all active valves, an analysis of the extended structure was performed for static equivalent seismic loads applied at the center of gravity (CG) of the extended structure. The minimum stress limits allowed in these analyses will assure that no significant permanent damage occurs in the extended structures during the earthquake.

Motor operators and other electrical appurtenances necessary for operation were qualified.

The natural frequencies of all active valves were determined by test or by analysis. If the natural frequencies of the valves were shown to be less than 33 Hz, one of the following options was employed:

(1) The valve was qualified by dynamic testing.

(2) The valve was modified to increase the minimum frequency to greater than 33 Hz.

(3) The valve was qualified conservatively using static accelerations that are sufficiently in excess of accelerations it might experience in the plant to take into account any effect due to both multifrequency excitation and multi-mode response (a factor of 1.5 times peak acceleration is generally accepted, although lower coefficients can be used when shown to yield conservative results).

(4) A dynamic analysis of the valve was performed to determine the equivalent acceleration to be applied during the static analysis. The analysis provided the amplification of the input acceleration considering the natural frequency of the valve and the frequency content of the applicable plant floor response spectra. The adjusted accelerations were then used in the static analysis and the valve operability was assured by the methods outlined above, using the modified acceleration input.

Swing check valves are characteristically simple in design and their operation is not affected by seismic accelerations or applied nozzle loads. The check valve design is compact and there are no extended structures or masses whose motion could cause distortions which could restrict operation of the valve. The nozzle loads due to seismic excitation do not affect the functional ability of the valve since the valve disc is typically designed to be isolated from the casing wall. The clearance available around the disc prevents the disc from becoming bound or restricted due to any casing distortions caused by nozzle loads. Therefore, the design of these valves is such that once the structural integrity of the valve is assured using standard design or analysis methods, the ability of the valve to operate is assured by the design features. For the faulted condition evaluations, since piping stresses are shown to be acceptable, the check valves are qualified.

The valves have undergone the following tests: (a) in-shop hydrostatic test, (b) in-shop seat leakage test, and (c) periodic in-plant exercising and inspection to assure functional ability.

By the above methods, all active valves are qualified for operability for the faulted condition seismic loads. These methods simulate the seismic event and assure that the active valves will perform their PG&E Design Class I functions when necessary.

5.2.2.1.8 Inadvertent Operation of Valves

The inactive valves within the RCPB listed in Table 5.2-9 are not relied upon to function after an accident. They meet redundancy requirements and will not increase the severity of any of the transients discussed in Section 5.2.2.1.5, if operated inadvertently during any such transient.

5.2.2.1.9 Stress and Pressure Limits

System hydraulic and thermal design parameters are the basis for the analysis of equipment, coolant piping, and equipment support structures for normal and upset loading conditions. The analysis uses a static model to predict deformation and stresses in the system. The analysis gives six components, three moments, and three forces. These moments and forces are resolved into pipe stresses in accordance with applicable codes. Stresses in the structural supports are determined by the material and section properties based on linear elastic small deformation theory.

In addition to the loads imposed on the system under normal and upset conditions, the design of mechanical equipment and equipment supports requires that consideration also be given to faulted loading conditions such as those experienced during seismic and pipe rupture events.

Analysis of the RCLs and support systems for seismic loads is based on a three dimensional, multi-mass elastic dynamic model. The floor response spectra are used as input to the detailed dynamic model, which includes the effects of the supports and the supported equipment. The loads developed from the dynamic model are incorporated into a detailed support model to determine the support member stresses.

The dynamic analysis employs the displacement method, lumped parameter, stiffness matrix formulations, and assumptions that all components behave in a linearly elastic manner. Seismic analyses are covered in detail in Section 3.7.

5.2.2.1.10 Stress Analysis for Structural Adequacy

Methods and models used to determine the structural adequacy of components under the normal and upset conditions are described herewith.

5.2.2.1.10.1 Analysis Method for Reactor Coolant System

Loading combinations and allowable stresses for RCS components are provided in Tables 5.2-5through 5.2-7.

The load combinations considered in the design of structural steel members of component supports are summarized in Tables 5.2-8 and 5.2-8a. The RCS design is described in Section 5.5. The following paragraphs define the loads applied in the analysis:

(1) Deadweight

The deadweight loading imposed by the RCL piping and primary equipment components on the supports consists of the dry weight of the coolant piping and weight of the water contained in the piping during normal operation. In addition, the total weight of the primary equipment components, including water, forms a deadweight loading on the individual component supports.

The deadweight loading imposed on the RCL piping consists of the dry weight of the coolant piping and weight of the water contained in the piping, SG, and the RCP during normal operation. The weight of the water in the SG and the RCP is applied as an external force in the deadweight analysis to account for equipment nozzle displacement as an external movement. The deadweight loading imposed on the RCL piping does not include the dry weight of the primary equipment since the components are set onto the primary equipment supports prior to the welding of the RCL piping.

(2) Thermal Expansion

The free vertical thermal growth of the reactor vessel nozzle centerlines is considered to be an external anchor movement transmitted to the RCL. The primary equipment supports are designed to allow the RCL piping and primary equipment components to expand thermally up to the normal operating temperature conditions. The thermal expansion analyses of the RCL piping include the thermal expansion effects of the RCL piping and primary equipment.

(3) Earthquake Loads (DE, DDE and Hosgri)

The earthquake (DE, DDE and Hosgri) acceleration, which produces transient vibration of the equipment mounted within the containment building, is specified in terms of the floor response spectrum curves at various elevations within the containment building.

These floor response spectrum curves for earthquake motions are described in detail in Section 3.7.

(4) Pressure

The steady state hydraulic forces based on the system's initial pressure are applied as internal loads to the RCL model for determination of the RCL support system deflections and support forces.

(5) LOCA

The RCL piping was analyzed for dynamic effects of pipe rupture events. Since the dynamic effects of pipe rupture events in the main RCL piping no longer have to be considered in the design basis analyses (refer to Section 3.6.2.1.1.1), pipe rupture loads for the analysis are defined for RCL branch line breaks. The pipe rupture load analysis considered double-ended circumferential breaks in the RHR, SI (accumulator line), and pressurizer surge line connections to the RCL piping. These are the bounding RCL branch line breaks.

(6) Other Pipe Rupture Loads

The analysis also considered the effects of main steamline and feedline breaks on the RCL piping and the RCS equipment supports.

5.2.2.1.10.2 Analytical Models

The static and dynamic structural analyses assume linear elastic behavior and employ the displacement (stiffness) matrix method and the normal mode theory for lumped-parameter, multimass structural representation to formulate the solution.

(1) Reactor Coolant Loop Model

The RCL model is constructed for the WESTDYN (Reference 18) computer program. This is a special purpose program designed for the static and dynamic analysis of redundant piping systems with arbitrary loads and boundary conditions.

The RCL and support model used for static and LOCA analysis is a one-loop model that describes the spatial geometry, lumped-mass locations, and the node points as shown in Figure 5.2-2. Stiffness characteristics of the equipment support structures are incorporated as linear elastic restraints in the RCL model. The WESTDYN program computes internal member forces, support structure reactions, nodal point deflections, and stresses and also determines system natural frequencies.

The RCL seismic model for DE, DDE and Hosgri is a four-loop model that describes the spatial geometry, lumped-mass locations, and other node points as shown in Figure 5.2-2A. Stiffness characteristics of the equipment support structures are incorporated as linear elastic restraints in the RCL model. Two lumped masses represent the vessel shell. One is located at the vessel flange and the other is located at the lower radial restraints. Four lumped masses represent the core barrel and internals. One mass is located at each of the upper and lower core plates and another mass is located at the middle of the core plates. The fourth mass is lumped at the lower radial restraints. Fuel assemblies are also represented by three lumped masses. Each is located at a quarter point along the length of the assembly. The SG is represented by a three-mass, lumped model. The lower mass position is located at the intersection of the inlet and outlet nozzles of the SG. The middle mass position is located at the SG upper support elevation. The upper mass position is located at the top of the SG.

In the seismic DE, DDE and Hosgri analyses, the RCP is represented by a five-mass lumped model. For the RCP five-mass, lumped model, the lowest mass position is located at the intersection of the pump suction and discharge nozzles. The remaining four lumped-masses were used to represent the various components of the reactor coolant pump, such as the main flange, rotor, stator, motor stand, and flywheel.

(2) Support Structure Models

The equipment support structure models have dual purposes since they are required:

(a) To quantitatively represent, in terms of 6 x 6 or 3 x 3 stiffness matrices, or stiffness values, the elastic restraints which the supports impose upon the loop

(b) To evaluate the individual support member stresses due to the forces imposed upon the support by the loop.

The loadings on the component supports are obtained from the analysis of an integrated RCL support system's dynamic structural model, as shown in Figures 5.2-2 and 5.2-2A.

Figures 5.2-2 and 5.2-2A show the RCL model and component supports included in the RCL piping analysis . The analysis considered the pipe rupture restraints on the main RCL piping to be inactive. The pipe rupture restraints on the main RCL piping were made inactive by either removing shims or by removing the support.

The primary equipment supports were evaluated using ANSYS, GTSTRUDL and WESPLAT finite element analysis computer programs.

(3) Hydraulic Models

The hydraulic model is constructed to quantitatively represent the behavior of the coolant fluid within the RCLs in terms of the concentrated time-dependent loads imposed upon the loops.

In the original analysis, in evaluating the hydraulic forcing functions during a LOCA, the pressure and the momentum flux terms are dominant. Inertia and gravitational terms were neglected although they were taken into account when evaluating the local fluid conditions.

Thrust forces resulting from a LOCA were calculated in a two-step process. First, the MULTIFLEX 3.0 (Reference 6) code calculated transient pressure, flowrates, and other coolant properties as a function of time. Second, the THRUST (Reference 18) code used the results obtained from MULTIFLEX 3.0 and calculated time-history of forces at locations where there is a change in either direction or area of flow within the RCL. These locations for the broken loop are shown in Figure 5.2-3.

For the RCL piping analysis , thrust forces and blowdown loads were determined for RCS branch line, main steamline, and feedline breaks identified in Section 5.2.2.1.10.1.

5.2.2.1.10.3 Analysis and Solutions

(1) Static Load Solutions

The static solutions for deadweight, thermal expansion, and pressure load conditions are obtained by using the WESTDYN computer program.

(2) Normal Mode Response Spectral Seismic Load Solution

The stiffness matrices representing various supports for dynamic behavior are incorporated into the RCL model. The response spectra for the DE, DDE and HE are applied along the horizontal and vertical axes simultaneously. From the input data, the overall stiffness matrix of the three-dimensional RCL is generated and the natural frequencies and normal modes are obtained by the modified Jacobi method.

The forces, moments, deflections, rotations, support structure reactions and stresses are then calculated for each significant mode. The total

seismic response is computed by combining the contributions of the significant modes by the SRSS method.

5.2.2.1.10.4 Reactor Coolant Loop Stress Analysis Results

The stress for the normal and upset conditions shows that the stresses in the piping are below the code-allowable values.

(1) Normal Conditions

Stresses due to primary loading of pressure and deadweight are combined and compared with the stress value for the applicable material property. Refer to Section 5.2.2.1.3. for the applicable code edition. The thermal expansion stress is a secondary stress. The magnitude of the thermal stress is compared with the B31.1 Piping Code allowable expansion stress limit.

The stress evaluation for the normal condition shows that the stresses in all RCL members are within the allowable stress values.

(2) Upset Conditions

The DE stresses are added to the stresses due to primary loadings of pressure and deadweight. The stress evaluation for the upset condition shows that stresses in all RCL members are within the allowable stress values.

5.2.2.1.10.5 Component Supports Stress Analysis Results

(1) Normal Conditions

Thermal, weight, and pressure forces (obtained from the RCL analysis) acting on the support structures are combined algebraically.

(2) Upset Conditions

DE support forces are added algebraically to normal condition forces. The interaction and stress equations are compared to the allowable limits specified by AISC-1969, which includes a 1/3 allowable stress increase for seismic.

The stress evaluation for the normal and upset conditions shows that the stresses in all members are within the allowable values.

5.2.2.1.11 Analysis Method for Faulted Condition

The analysis of the RCLs and support systems for blowdown loads resulting from a LOCA is based on the time-history response of simultaneously applied blowdown forcing functions on a dynamic model of the RCL and support system. The forcing functions are defined at points in the system loop where changes in cross-section or direction of flow occur such that differential loads are generated during the blowdown transient. Stresses and loads are checked and compared to the corresponding allowable stress.

The stresses the RCL piping, components, and component supports resulting from normal sustained loads and the worst case blowdown analysis (LOCA or other pipe breaks) are combined with the results of seismic faulted condition analyses, using absolute sum or SRSS methodology to determine the maximum stress for the combined loading case. Combining LOCA or other pipe break and seismic loads is considered very conservative since it is highly improbable that both maxima will occur at the same instant. These stresses are combined to ensure that the main reactor coolant piping loops and connected primary equipment support system will not lose their intended functions under this highly improbable situation.

Combining seismic faulted condition and LOCA dynamic loads using SRSS methodology is subject to the conditions and limitations of NUREG-0484, May 1980, Methodology for Combining Dynamic Responses:

- The SRSS technique is acceptable contingent upon performance of a linear, elastic, dynamic analysis to meet the appropriate ASME BPVC Section III, Service Limit for faulted load condition.

For components not designed to ASME Section III, a code reconciliation to ASME BPVC Section III is required to apply the above.

For faulted conditions, the limits are provided in Tables 5.2-5 and 5.2-7.

Further details of the stress analysis for faulted conditions are presented in Sections 5.2.2.1.14 and 5.2.2.1.15.

Protection criteria against dynamic effects associated with pipe breaks are covered in Section 3.6. For the RCL analysis, thrust forces and blowdown loads were determined for RCS branch line breaks identified in Section 5.2.2.1.10.1.

5.2.2.1.12 Protection Against Environmental Factors

Protection provided for the RCS against environmental factors is discussed in Sections 3.3, 3.4, 3.5 and 3.6. Fire protection is discussed in Section 9.5.1.

5.2.2.1.13 Compliance with Code Requirements

In the PG&E classification of DCPP fluid systems and fluid system components, the vessels, piping, valves, pumps and their supports of the RCS pressure boundary are designated PG&E Design Class I, PG&E Quality/Code Class I. The comparison of DCPP system Design/Quality/Code classifications to non-licensing basis regulations and codes is discussed in Section 3.2 and delineated in Table 3.2-4.

For conservative fatigue evaluations of the reactor vessel, SG, RCP, and pressurizer in accordance with the ASME BPVC per Table 5.2-2, maximum stress intensity ranges are derived from combining the normal and upset condition transients discussed in Section 5.2.2.1.5. The stress ranges and number of occurrences are then used in conjunction with the fatigue curves in the ASME BPVC per Table 5.2-2 to get the associated cumulative usage factors.

The criterion presented in the ASME BPVC per Table 5.2-2 is used for fatigue analysis. The cumulative usage factor is less than 1, hence, the fatigue design is adequate.

The reactor vessel stress reports include a summary of the critical stress locations analyzed in the vessel, a discussion of the results including a comparison with the corresponding code limits, descriptions of the methods of analysis and computer programs used, a presentation of some of the actual hand calculations performed, and a tabulation of the references cited in the report. The content of the stress report is in accordance with the requirements of the ASME BPVC per Table 5.2-2.

For the RVCH, the content of the stress report is in accordance with the requirements of the ASME BPVC per Table 5.2-2.

5.2.2.1.14 Stress Analysis for Faulted Condition Loadings (Double Design Earthquake, Hosgri, Loss-of-Coolant Accident and Pipe Rupture)

Stress analyses of the RCS for faulted conditions employ the displacement (stiffness) matrix method and lumped-parameter, multimass representation of the system. The analyses are based on adequate and accurate representation of the system using an idealized, mathematical model. This section discusses the RCL and support structures analysis. Refer to Section 5.2.2.1.15 for component analysis.

5.2.2.1.14.1 Analysis Method

(1) Reactor Coolant Loop

The procedure for evaluation of the piping stresses due to combined loadings of weight, pressure, DDE or Hosgri, LOCA, and other pipe breaks is as follows:

(a) The LOCA and other pipe break stress analysis yields the time-history of stresses at various crosssections in the RCL piping.

(b) The DDE and Hosgri analysis of the RCL piping was performed using the response spectra method. The RCL seismic model was constructed for the WESTDYN computer program.

(c) Containment internal concrete structure horizontal response spectra at elevations corresponding to the SG upper supports, SG lower supports, RCP supports, and the reactor vessel supports were used in the analysis. For the Hosgri seismic analysis, a vertical response spectra envelope from 114 foot elevation to the base slab 87 foot elevation was used in the analysis. For the DDE seismic analysis, the vertical response spectrum is two-thirds of the ground horizontal response spectrum.

(d) For each mode, the results due to the vertical shock were combined by direct addition with the results of the horizontal shock directions. The modal contributions were then added by the SRSS method.

(e) For the Hosgri seismic analyses, eight horizontal shock directions were performed and the eight directions were made up of four pairs of perpendicular shock directions. The shock directions correspond to the following: 1) parallel with the north-south axis, 2) parallel with the east-west axis, 3) 22 degrees counterclockwise off the north-south axis, 4) 22 degrees counterclockwise off the east-west axis, 5) 22 degrees clockwise off the north-south axis, 6) 22 degrees clockwise off the east-west axis, 7) 45 degrees clockwise off the north-south axis, and 8) 45 degrees clockwise off the east-west axis.

(f) For the DDE seismic analyses, eight horizontal shock directions were performed and the eight directions were made up of four pairs of perpendicular shock directions. The shock directions correspond to the following: 1) parallel with the north-south axis, 2) parallel with the east-west axis, 3) 22 degrees counterclockwise off the north-south axis, 4) 22 degrees counterclockwise off the east-west axis, 5) 22 degrees clockwise off the north-south axis, 6) 22 degrees clockwise off the east-west axis, and 7) 45 degrees clockwise off the north-south axis, and 8) 45 degrees clockwise off the east-west axis.

(g) The results of the analysis are as follows: The results of the seismic evaluation were combined with the pressure and

deadweight stresses. The revised RCL piping stresses were all under the allowable stress limits in Table 5.2-5.

(h) Since the DDE results are obtained by the response spectra method, the six components of a state vector for deflection at a point or for internal member force cannot be assigned absolute and/or relative algebraic signs. Consequently, the maximum values of the DDE axial and shear stresses at a pipe cross-section are calculated from the internal force state vector at that cross-section by considering all possible permutations of signs of the six components of the state vector. The DDE axial and shear stresses are combined with the time-history of LOCA, or other pipe breaks, axial and shear stresses.

(i) Dynamic LOCA loads resulting from pipe rupture events in the RCL branch lines were considered in the design basis stress analyses and were included in the loading combinations. Dynamic pipe break loads at the main steamline and feedline were also considered in the design basis stress analyses and were included in the loading combinations.

(j) The stresses in the RCL piping are calculated using the equations specified in the B31.1 Code. The code equation piping stresses are compared to the applicable material code allowable stress limits to demonstrate conformance to the B31.1 Code requirements.

(k) The previous steps are performed for various cross-sections in the RCL piping. It should be emphasized that, for a given location of the pipe cross-section, the stress intensity calculation is performed with either the maximum stress for all given time steps, or for every step computed from the time-history analysis.

(l) Maximum resultant deadweight, DDE or Hosgri, and LOCA or other pipe break moments were determined at locations located along the RCL piping, elbows, and connections to equipment. At each location, the maximum resultant moment for DDE or Hosgri is the largest resultant moment from the various shock cases that were performed for the seismic analysis. The largest resultant moment for LOCA or other pipe break is the largest moment from the pipe rupture analyses for RCL branch line breaks (LOCA) and other pipe breaks (main steamline or feedline breaks).

(m) As explained in Section 5.2.2.1.3, B31.1 Code pipe stress equations were used with the resultant moments to determine deadweight, DDE or Hosgri, and LOCA or other pipe break pipe

stresses at locations along the RCL corresponding to the maximum resultant moment locations. At each location, the stresses were combined by absolute sum and were added to the pressure stress to determine the maximum stress at that location. This maximum stress was then verified to be within the stress limit provided in Table 5.2-5. It should be emphasized that the above analysis method is very conservative since the peak DDE or Hosgri, and LOCA or other pipe break pipe stresses are considered to occur at the exact same instant in time and that the resultant moments for each load type are considered to be aligned such that the maximum pipe stress occurs at the same location around the pipe circumference for each load type.

(2) Evaluation of Support Structures

The support loads are computed by multiplying the support stiffness values by the displacement values at the support point. The support loads are used for support member evaluation.

For the support qualification, the following inputs were entered into a GTSTRUDL or ANSYS finite element analysis computer program:

(a) Loads acting on the supports obtained from the RCL analysis (including time-history LOCA forces)
(b) Support seismic self-weight excitation loads.
(c) Attached platform loads.
(d) Attached pipe support loads.
(e) Asymmetric compartment pressurization loads.
(f) Jet impingement loads.
(g) Support structure member properties.
(h) Support Geometry.
(i) Material properties and code parameters.

The resulting member and component stresses were compared to the acceptance criteria allowable stresses as specified in Table 5.2-8.

RCS component supports were shown adequate by evaluating the supports for the loads determined in the integrated RCLs seismic analysis.

Stress analyses for structural qualification of the primary equipment supports were performed using the load combinations described in Table 5.2-8. ANSYS, GTSTRUDL and WESPLAT finite element analysis computer programs were used to perform the analysis. The independent loadings included deadweight (DW), thermal expansion (TH), system pressure (P), design earthquake (DE), double design earthquake (DDE), Hosgri earthquake (HE), loss-of-coolant accident (LOCA), other pipe ruptures (OPR), jet impingement (JI) and asymmetric compartment pressurization loads.

Input loads applied to the primary equipment supports were taken from the results of an integrated reactor coolant loop/support model. Loads from pipe supports and platforms attached to the primary equipment supports were also applied. For seismic self-weight excitation (SWE) of the support structure, the containment internal building structure seismic data (peak accelerations, zero period accelerations (ZPAs) and response spectra) for the DE, DDE and HE earthquakes were applied. The use of ZPAs in lieu of peak accelerations was supported by modal analysis to show that supports behave as rigid structures.

ANSYS and GTSTRUDL finite element analysis computer programs were also used to obtain support stiffness values for the equipment supports.

In summary, stresses in all RCS component support members are within the acceptance criteria limits specified in Table 5.2-8 for the DE, DDE and Hosgri seismic events combined as specified in Table 5.2-8.

(3) Integrated Head Assembly (IHA)

The ANSYS general purpose finite element program was used to perform structural analysis of the IHA. The IHA was evaluated for stresses due to combined loadings of weight (dead load), pressure, thermal, maintenance, missile impact, seismic (DDE or Hosgri) and LOCA. The seismic loading associated with the DDE and Hosgri was developed as described in Section 3.7.3.15.4. LOCA loads were applied where the IHA is attached to the reactor head. Seismic, LOCA, and other loads were combined as shown in Table 5.2-8a. The resulting loads and stresses for the various components of the IHA were evaluated using the requirements of ASME Section III, Division I, 2001 Edition through 2003 Addenda, Subsection NF and Appendix F as shown in Table 5.2-8a.

5.2.2.1.14.2 Time-history Dynamic Solution for Loss-of-Coolant Accident Loading

The initial displacement configuration of the mass points is defined by applying the initial steady state hydraulic forces to the RCL model. These initial displacement conditions, natural frequencies, normal modes, the time-history hydraulic forcing functions and reactor vessel nozzle displacements are used by the WESTDYN program to calculate the time-history dynamic response for the RCL model. The time-history response is used to determine pipe moments, support forces, and pipe deflections.

5.2.2.1.14.3 Analysis Results

All support system elements were evaluated to verify that the supported equipment and piping remain within their respective faulted condition stress limits. Stresses in the support system elements for faulted conditions are below the limits provided in Table 5.2-8. Stresses in the RCL piping for faulted conditions are below code-allowable values. Stresses in the PG&E Design Class I members and connections of the IHA for the specified load conditions meet the acceptance criteria provided in Table 5.2-8a.

5.2.2.1.15 Component Stress Analysis for Faulted Condition Loadings (Double Design Earthquake, Hosgri, Loss-of-Coolant Accident and Pipe Rupture)

5.2.2.1.15.1 Integrated Reactor Coolant Loop Analysis

Stress analysis for faulted condition loadings (DDE, Hosgri, LOCA, and other pipe breaks) is discussed in Section 5.2.2.1.14.1 for the RCL.

5.2.2.1.15.2 Steam Generator Evaluation

The SGs are designed and analyzed in accordance with the ASME Boiler and Pressure Vessel Code of the 1998 Edition through the 2000 Addenda of the ASME Code, Section III. The SG primary side is classified as ASME Code Class 1 (PG&E Quality/Code Class I); the SG secondary side is classified as ASME Code Class 2 (PG&E Quality/Code Class II). The evaluation of the LOCA and seismic (Faulted) conditions are based on meeting the acceptance criteria of ASME III, Appendix F. The design load combinations are identified in Table 5.2-6 and the stress criteria are identified in Table 5.2-7.

Loss-of-coolant primary pipe break hydraulic forcing functions time history were obtained from the LOCA hydraulic forces analysis for the SG. Seismic response spectra, pipe rupture loadings, and pipe nozzle loadings were obtained from applicable design specifications and the RCL analysis for the SG. The Design Limits for Level D (Faulted) Conditions were obtained from Subsection NB and Appendix F, respectively, of the ASME Code. Service Limits were also obtained from the ASME Code.

A finite element based model of the DCPP SGs is used for the dynamic analysis. The model consists of a system of pipe and beam elements, lumped mass elements, and general matrix elements (with both mass and stiffness options). The primary piping stiffness, secondary piping stiffness, external supports stiffness, and some internals stiffness are represented using general matrix elements. The SG dynamic model is coded for use with the ANSYS computer program. ANSYS is a general purpose finite element program with a wide variety of capabilities and an extensive library of finite elements.

A seismic faulted analysis has been performed to predict the response of the SG and its internals to DDE and HE loadings. A linear response spectrum dynamic analysis is

used to predict the seismic response of the SG. The seismic analysis of the SGs has been performed using the plant response spectra and external support and piping stiffness for the DCPP Unit 1 and Unit 2 site configuration.

5.2.2.1.15.3 Reactor Coolant Pump Evaluation

The RCPs are designed and analyzed in accordance with the ASME Boiler and Pressure Vessel Code Section III per Table 5.2-2. The evaluation of the LOCA and seismic (Faulted) conditions are based on meeting the stress limits in Table 5.2-7. The design load combinations are identified in Table 5.2-6.

The seismic analyses of the RCP were performed using dynamic modal methods with a finite element computer program. The seismic response spectra corresponding to the elevation of the RCP support structure were used.

The RCP and motor were modeled as a system of nodes and elements (pipes, beams, mass with rotary inertia, springs, fluid elements and stiffness matrices). A modal analysis was performed to determine mode frequencies, mode shapes, and mode participation factors of the pump and motor. The seismic response spectra analyses were performed using the EMDAC_FEA finite element computer program. Seismic response spectra loadings and pipe rupture loadings were determined and the RCP evaluated for the faulted conditions.

The LOCA analysis was performed by a nonlinear transient dynamic method using the EMDAC_FEA computer program. Time histories of the external forces and moments acting on the RCP and the severed cross-over leg were applied to the finite element model of the RCP.

The nozzles and support feet of the RCP were analyzed by static stress analysis methods with externally applied design loads.

5.2.2.1.15.4 Reactor Vessel Evaluation

The reactor vessel is designed and analyzed in accordance with the ASME BPVC 1965 (Unit 1) through Winter 1966 Addenda and 1968 (Unit 2) Editions of the ASME BPVC Section III. The reactor vessel is classified as ASME Code Class A. The evaluation of the LOCA and seismic (Faulted) conditions are based on meeting the stress limits in Table 5.2-7. The design load combinations are identified in Table 5.2-6.

Loss-of-coolant primary pipe break hydraulic forcing functions were obtained from the LOCA hydraulic forces analysis for the reactor vessel. Seismic response spectra, pipe rupture loadings, and pipe nozzle loadings were determined and evaluated for the faulted condition.

A seismic faulted analysis has been performed to predict the response of the reactor vessel and its internals to DDE and HE loadings. A linear response spectrum dynamic

analysis is used to predict the seismic response of the reactor vessel. The seismic analysis of the reactor vessel has been performed using the plant response spectra and external support and piping stiffness for the DCPP Unit 1 and Unit 2 site configuration.

Several portions of the reactor vessel were evaluated using static stress analysis methods with externally applied design loads. The CRDM and core exit thermocouple head adapter, closure head flange, vessel flange, closure studs, inlet nozzle, outlet nozzle, vessel support, vessel wall transition, core barrel support pads, bottom head shell juncture and bottom head instrumentation penetrations were analyzed by this method. The design loads for all areas evaluated are based on the actual plant loads. All stresses and fatigue usage factors were found to be acceptable.

5.2.2.1.15.5 Reactor Vessel Internals Evaluation

The reactor vessel internals evaluation is presented in Sections 3.7.3.15 and 3.9.2.3.

5.2.2.1.15.6 Fuel Assembly Evaluation

The fuel assembly evaluation is presented in Sections 3.7.3.15 and 3.9.2.

5.2.2.1.15.7 Control Rod Drive Mechanism

The SYSTUS finite element computer code was used to perform structural analysis of the replacement CRDM pressure housings. The CRDM pressure housings were evaluated for stresses due to combined loadings of deadweight, pressure, thermal, seismic, LOCA, and other pipe ruptures as shown in Table 5.2-6a. The seismic loadings were developed as described in Section 3.7.3.15.3. The combined stresses were determined at each critical location along the length of the CRDM assembly including locations along the rod travel housing, latch housing, and CRDM penetration into the RVCH. The resulting loads and stresses for the CRDM pressure housings were evaluated using the requirements of ASME Section III, Division I, 2001 Edition through 2003 Addenda, Subsection NB and Appendix F as shown in Table 5.2-6a. The results demonstrated the ASME code limits are met for the CRDM pressure housings.

5.2.2.1.15.8 Primary Equipment Support Evaluation

The evaluation of primary equipment supports is presented in Section 5.2.2.1.14.1(2).

5.2.2.1.15.9 Pressurizer Evaluation

The pressurizer is designed and analyzed in accordance with the ASME Boiler and Pressure Vessel Code of the 1965 Edition through Summer 1966 Addenda of the ASME Code, Section III. The evaluation of the LOCA and seismic (Faulted) conditions are based on meeting the stress limits in Table 5.2-7. The design load combinations are identified in Table 5.2-6.

A dynamic modal analysis was performed to evaluate the response of the pressurizer and its internals to DDE and Hosgri loadings. The seismic dynamic analysis modeled the heater rods, pressurizer vessel, and vessel support with beam elements and lumped mass elements. Seismic response spectra, pipe rupture loadings, and pipe nozzle loadings were determined and the pressurizer evaluated for the faulted conditions. Refer to Section 3.7.1.4 for the applicable DDE and Hosgri percent of critical damping values.

The Hosgri response spectra for 4 percent damping at the 140 feet elevation has a peak of 5.1 g horizontally, well below the value used to qualify the pressurizer.

A dynamic RCL analysis, which included a surge line model and was performed with the DDE and Hosgri response spectra, produced loads (forces and moments) on the support skirt, surge nozzle, and upper seismic lugs which were evaluated and shown to be acceptable.

5.2.2.1.15.10 Reactor Vessel Closure Head

The RVCH was designed and analyzed in accordance with the ASME Boiler and Pressure Vessel Code Section III, Division I, 2001 Edition through 2003 Addenda, Subsection NB and Appendix F. The RVCH is classified as ASME Code Class 1.

A finite element model of the reactor vessel closure region was used to perform the dynamic analysis of the RVCH. To adequately analyze the effects of the important structural items, a 46.67 degree circumferential segment of the reactor vessel closure region was modeled. The ANSYS general purpose finite element program was used to perform the dynamic analysis of the RVCH model. The RVCH model was evaluated for stresses due to combined loadings of dead weight, pressure, thermal, seismic (DE, DDE or Hosgri), LOCA, and other pipe ruptures as shown in Table 5.2-6a. The seismic and LOCA loadings were developed as described in Section 3.9.2.1.3. The resulting loads and stresses for the RVCH were evaluated using the requirements of ASME Section III, Division I, 2001 Edition through 2003 Addenda, Subsection NB and Appendix F as shown in Table 5.2-6a. The results demonstrated the ASME code limits are met for the replacement RVCH.

5.2.2.1.15.11 Core Exit Thermocouple Nozzle Assembly

The ANSYS finite element computer code was used to perform structural analyses of the core exit thermocouple nozzle assembly (CETNA) pressure boundary components. The CETNA pressure-retaining components were evaluated for stresses due to combined loadings of deadweight, pressure, thermal, seismic, and LOCA, as shown in Table 5.2-6a.

The seismic and LOCA loadings were developed using the response spectrum modal superposition method described in Section 3.7.3.15.3. Horizontal and vertical response spectra at the RVCH CG elevation were input to the model. The two orthogonal

horizontal direction response spectra were combined using the SRSS method. Horizontal and vertical seismic responses were combined using SRSS method. Seismic (DDE and HE) and LOCA stresses were combined using the SRSS method. Response spectra critical damping values were analyzed according to welded steel structures in Regulatory Guide 1.61, October 1973.

The combined stresses were determined at each critical location and were evaluated using the requirements of ASME BPVC Section III, Division I, 1989 Edition, Subsection NB. A code reconciliation is performed for the requirements of ASME BPVC Section III, Division I, 2001 Edition through 2003 Addenda. The results demonstrated that the ASME code limits are met for the CETNA pressure-retaining components.

5.2.2.1.16 Stress Levels in Reactor Coolant Pressure Boundary Components

Sections 5.2.2.1.10.4, 5.2.2.1.14 and 5.2.2.1.15 discuss RCS PG&E Quality/Code Class I components and the resulting stress levels under normal, upset and faulted conditions.

5.2.2.1.17 Analytical Methods for Stresses in Pumps and Valves

The design and analysis to ensure structural integrity and operability of the RCPs and valves used the load combinations and stress limits as defined in Table 5.2-5 for stress limits for Class A loop piping and valves, and Tables 5.2-6 and 5.2-7 for the RCPs. As a result, the design and analyses of these components are based on the requirements of various codes and procedures that were in effect when the equipment was purchased.

These codes and procedures have been widely used by the nuclear industry and were, to a large extent, incorporated or referenced in ASME BPVC Section III-1971 (refer to Section 3.9.2). Every valve and pump is hydrostatically tested to the applicable ASME BPVC requirements, as listed in Table 5.2-2, ensures the integrity of the pressure boundary parts.

5.2.2.1.18 Analytical Methods for Evaluation of Pump Speed and Bearing Integrity

RCP overspeed evaluation is covered in Section 5.5.1.

5.2.2.1.19 Operation of Active Valves Under Transient Loadings

Operation of active valves under transient loadings is discussed in Sections 3.9.2 and 3.10. Refer to Table 5.2-9 for a listing of active and inactive valves within the RCPB.

HISTORICAL INFORMATION IN ITALICS BELOW NOT REQUIRED TO BE REVISED

During plant startup testing, the preoperational piping dynamics effects test program described in Section 3.9.1 will note and correct excessive piping deflections and vibrations. Since all valves are supported as part of adjoining piping, this testing and

any required corrective action, will ensure that the deflections by the pipe (and valve) supports will not impair the operability of active PG&E Design Class I valves, including those in the RCS pressure boundary.

5.2.2.2 Overpressurization Protection

The pressurizer is designed to accommodate pressure increases (as well as decreases) caused by load transients. The spray system condenses steam to prevent the pressurizer pressure from reaching the setpoint of the PORVs during a step reduction in power level of 10 percent of load. Flashing of water to steam and generation of steam by automatic actuation of the heaters keeps the pressure above the low-pressure reactor trip setpoint.

The spray nozzles are located on the top of the pressurizer. Spray is initiated when the pressure controlled spray demand signal is above a given setpoint. The spray flow increases proportionally with increasing pressure and pressure error until it reaches a maximum value.

Overpressure protection is discussed in the Sections 5.2.2.2.1 through 5.2.2.2.3. Protection against overpressurization during low temperature operation is provided by the LTOP system, which is described in Section 5.2.3.28.

5.2.2.2.1 Location of Pressure-Relief Devices

The pressurizer is equipped with three PORVs that limit system pressure for a large power mismatch and thus prevent actuation of the fixed high-pressure reactor trip. The relief valves are operated automatically or by remote-manual control. The operation of these valves also limits the undesirable opening of the spring-loaded safety valves. Remotely operated block valves are provided to isolate the PORVs if excessive leakage occurs. The relief valves are designed to limit the pressurizer pressure to a value below the high-pressure trip setpoint for all design transients, up to and including, the design percentage step load decrease with steam dump but without reactor trip.

Isolated output signals from the pressurizer pressure protection channels are used for pressure control. These are used to control pressurizer spray and heaters, and PORVs.

In the event of a complete loss of heat sink, protection of the RCS against overpressure (Reference 1) is afforded by pressurizer and SG safety valves along with any of the following reactor trip functions:

(1) Reactor trip on turbine trip

(2) Pressurizer high-pressure reactor trip

(3) Overtemperature ΔT reactor trip

(4) SG low-low water level reactor trip

A detailed functional description of the process equipment associated with the high-pressure trip is provided in Reference 2.

The overpressure protection upper limit is based on the positive surge of the reactor coolant produced as a result of turbine trip under full load, assuming the core continues to produce full power and normal feedwater is maintained. The self-actuated safety valves are sized on the basis of steam flow from the pressurizer to accommodate this surge at a setpoint of 2500 psia and a total accumulation of 3 percent. Each of the safety valves is rated to carry 420,000 lb/hr, which is greater than one-third of the total rated capacity of the system. Note that no credit is taken for the relief capability provided by the PORVs during this surge.

The RCS design and operating pressures, together with the safety, power-relief, and pressurizer spray valve setpoints, and the protection system setpoint pressures are listed in Table 5.2-10. A schematic representation of the RCS showing the location of pressure-relieving devices is shown in Figure 3.2-7.

System components whose design pressure and temperature are less than the RCS design limits are provided with overpressure protection devices and redundant isolation means. System discharge from overpressure protection devices is collected in the PRT in the RCS. Isolation valves are provided at all connections to the RCS. Figures 3.2-8 through 3.2-10 show those systems that communicate directly with the RCS, and all pressure-relieving devices to prevent reactor coolant pressure from causing overpressure in auxiliary emergency systems in the event of leakage into those systems.

All pressurizer relief piping was manufactured, installed, and tested in accordance with ANSI B31.7-1969 with 1970 Addenda. The piping from the pressurizer to the relief valves is designed to ANSI B31.1-1967. The valve discharge piping to the PRT is designed to ANSI B31.7-1967 with 1970 Addenda - Class III piping. Refer to Section 3.9.2.1.7 for piping analysis.

5.2.2.2.2 Mounting of Pressure-Relief Devices

The pressurizer safety and relief valve piping system has undergone extensive analysis considering combined loads due to internal pressure, pipe and valve deadweight, thermal growth of the pressurizer, seismic accelerations due to earthquakes, and hydraulic hammer forces due to operation of the valve and the volume of water in the water seal at the inlet to the valve.

A vertical loop in the pipe between the pressurizer and the safety valve is provided to allow for differential thermal growth between the safety valves and the pressurizer. Previously, the loop provided a water seal against the valve seat to prevent gas and steam leakage through the valve from damaging the seat. The safety valves have been

modified from a water-seated to a steam-seated design and water in the loop is continuously drained. The hydraulic hammer analysis was a dynamic time-history type of analysis taking into account the water seal volume, the valve opening time, the location and number of bends in the downstream piping, and the lengths of each piece of straight pipe on the discharge of the valves. Analyses consider combinations of all three valves open or shut to determine the most highly stressed condition. The analyses have not been revised to reflect the absence of the water seal volume, resulting in a conservative design since the loads are less severe without the water seal volume.

5.2.2.2.3 Report on Overpressurization Protection

The design bases for overpressurization protection of the RCS are discussed in Section 5.5.9. Additional information is also provided in Section 5.2.3.28.

5.2.2.3 General Material Considerations

This section discusses the materials used in the RCS.

5.2.2.3.1 Material Specifications

The reactor vessels for Unit 1 and Unit 2 were fabricated to the 1965 Edition through Winter 1966 Addenda for Unit 1 and the 1968 Edition for Unit 2, of the ASME BPVC, Section III.

Materials of construction for the RVCHs meet the requirements of the ASME BPVC, Section III, 2001 Edition with Addenda through 2003.

Materials of construction for the SGs meet the requirements of the 1998 Edition of the ASME BPVC, Section III, with addenda through the 2000 Addenda. SG pressure boundary ferritic material is procured with reference temperature at nil ductility transition (RT_{NDT}) of 0°F.

Materials of construction for the pressurizers for Unit 1 and Unit 2 meet the requirements of the 1965 Edition of the ASME BPVC, Section III, and addenda through the 1966 Addenda. Charpy tests in the major working or rolling direction were performed at 10°F to ensure that the required toughness levels were obtained. The fracture toughness of these materials is considered sufficient to ensure a margin of safe operation.

Pipe is seamless forged stainless steel conforming to ASTM A376, Type 316 with weld repair limited to 3 percent of nominal wall thickness. Fittings in the main RCLs for both Unit 1 and Unit 2 are cast stainless steel conforming to ASTM A351, Gr. CF8M. The 90-degree elbows are cast in sections and joined by electroslag welds. The cobalt content is limited to 0.20 percent.

The minimum wall thickness of the pipe and fittings is not less than that calculated using ASA B31.1, Section 1, formula of paragraph 122 with an appropriate allowable stress value provided in Nuclear ASA Code Cases N-7 (for piping) and N-10 (for fittings).

The pressurizer surge line pipe conforms to ASTM A-376, Type 316, with supplementary requirements S2 (transverse tension tests) and S6 (ultrasonic test). The S2 requirements apply to each length of pipe. The S6 requirements apply to 100 percent of the piping wall volume. The pipe wall thickness for the pressurizer surge line is Schedule 140 for Unit 1 and Schedule 160 for Unit 2. There are two elbow fittings in the pressurizer surge line for both Unit 1 and Unit 2. The Unit 1 and Unit 2 surge line 14-inch elbows are wrought stainless steel conforming to ASTM A-403, WP316. The Unit 1 and Unit 2 surge line socket weld half coupling fittings are forged stainless steel conforming to ASTM A-182, F316.

Branch nozzles conform to SA-182, Grade F316. Thermal sleeves for Unit 1 and Unit 2 conform to SA-312 or SA-240, Type 316 or 304. The sample scoop conforms to SA-182, Type 304 or 316. The pressurizer spray scoop conforms to SA-403, Grade WP 304 or 316.

Stainless steel pipe conforms to ANSI B36.19 for sizes 1/2 through 12 inches and wall thickness schedules 40S through 80S. Stainless steel pipe outside of the scope of ANSI B36.19 conforms to ANSI B36.10, exclusive of the RCL piping of special sizes 27-1/2, 29, and 31 inches I.D. Flanges conform to ANSI B16.5. Socket weld fittings and socket joints conform to ANSI B16.11.

Radiographic or ultrasonic examination was performed throughout 100 percent of the wall volume of each pipe and fitting. Acceptance standards for ultrasonic testing are in accordance with ASME BPVC Section III, except that the defect standard for acceptance is a Charpy-V notch not exceeding 1 inch in length and 3 percent of wall thickness in depth. Acceptance standards for radiographic examination are in accordance with ASTM E-186 Severity Level 2, except that defect Categories D and E are not acceptable.

A liquid penetrant examination was performed on both the entire outside and inside surfaces of each finished hot, cold, and crossover loop fitting and pipe in accordance with the procedure of ASME BPVC Section VIII, Appendix VIII, and the acceptance standards of ASA B31.1, Code Cases N-9 or N-10.

All unacceptable defects were eliminated in accordance with the requirements of ASME BPVC Section III. All butt welds and nozzle welds are of a full penetration design; welds 2 inches and smaller are socket-welded joints. The mechanical properties of representative material heats in the final heat treat condition were no less than 1.20 times the allowable stress tabulated in ASA Code Case N-7 corresponding to 650°F.

Type 308 weld filler material was used for all welding applications to avoid microfissuring. As an option, Type 308L weld filler metal analysis was substituted for consumable inserts when this technique was used for the weld root closure. All welding was performed in accordance with the ASME BPVC Section IX. In all welding, except for the RVCH cladding operations, the interpass temperature was limited to 350°F maximum. The methodology used for the RVCH cladding was qualified using the guidance in Regulatory Guide 1.43, May 1973.

5.2.2.3.2 Compatibility with Reactor Coolant

The materials of construction of the RCPB were specified to minimize corrosion and erosion. To avoid the possibility of accelerated erosion, the internal coolant velocity is limited to about 50 fps.

The reactor vessel is constructed of carbon steel with a 0.125 inch minimum of stainless steel or Inconel cladding on all internal surfaces that are in contact with the reactor coolant. The pressurizer is also constructed of carbon steel with austenitic stainless steel or Inconel (Unit 2 only) cladding on all surfaces exposed to the reactor coolant. All parts of the RCP in contact with the reactor coolant are austenitic stainless steel except for seals, bearings, and secondary seals (O-rings made of elastomer material).

The portions of the SG in contact with the reactor coolant water are clad with austenitic stainless steel. The SG tubesheet is weld clad with Inconel and the heat transfer tubes are made of Inconel. Tables 5.2-11 through 5.2-14 summarize the materials of construction of these RCS components.

The reactor coolant piping and fittings that make up the loops are austenitic stainless steel. All smaller piping that comprises part of the RCS boundary, such as the pressurizer surge line, spray and relief line, loop drains, and connecting lines to other systems, is also made of austenitic stainless steel. All valves in the RCS that are in contact with the coolant are constructed primarily of stainless steel. Other materials in contact with the coolant, such as materials for hard surfacing and packing, are special materials.

5.2.2.3.3 Compatibility with External Insulation and Environmental Atmosphere

The materials of construction of the RCPB were specified to ensure compatibility with the containment-operating environment. All insulation used on the RCPB, as defined by the ASME BPVC Section XI, is of the reflective stainless steel type or as described in Section 6.3.3.35. Additional information on the compatibility of RCPB materials with the containment environment to which they are exposed is provided in Section 3.11.

5.2.2.3.4 Chemistry of Reactor Coolant

The RCS water chemistry is selected to minimize corrosion. A periodic analysis of the coolant chemical composition is performed to verify that the reactor coolant quality meets the specifications for coolant chemistry, activity level, and boron concentration.

The CVCS provides a means for adding chemicals to the RCS that control the pH of the coolant during initial startup and subsequent operation, scavenge oxygen from the coolant during startup, and control the oxygen level of the coolant due to radiolysis during all power operations subsequent to startup. To ensure thorough mixing, at least one RCP or RHR pump is always in service when chemicals are being added to the system or when changing the boron concentration.

The chemical used for pH control is lithium hydroxide. This chemical is chosen for its compatibility with the materials and water chemistry of the borated water/stainless steel/zirconium/Inconel system. In addition, lithium is present in solution from the neutron irradiation of dissolved boron in the coolant. The lithium hydroxide is introduced into the RCS via the charging flow. The solution is prepared in the plant and poured into the chemical mixing tank. Reactor makeup water is then used to flush the solution to the suction manifold of the charging pumps.

The concentration of lithium hydroxide in the RCS is maintained in the range specified for pH control. If the concentration exceeds this range, a demineralizer is valved in to remove the excess lithium. Since the amount of lithium to be removed is small and its buildup can be readily calculated and determined by analysis, the flow through the cation bed demineralizer is not required to be full letdown flow.

During reactor startup from the cold condition, hydrazine is employed as an oxygen scavenging agent. The hydrazine solution is introduced into the RCS using the same injection flow path as the pH control agent, as described above.

Dissolved hydrogen is employed to control and scavenge oxygen produced due to radiolysis of water in the core region. Sufficient partial pressure of hydrogen is maintained in the VCT such that the specified equilibrium concentration of hydrogen is maintained in the reactor coolant. A self-contained pressure control valve maintains a minimum pressure in the vapor space of the VCT. This can be adjusted to provide the correct equilibrium hydrogen concentration. The RCS water chemistry specifications are provided in Table 5.2-15.

5.2.2.4 Fracture Toughness

This section addresses fracture toughness in the RCPB. The RCS component upon which operating limitations are based is the reactor vessel.

5.2.2.4.1 Compliance with Code Requirements

Assurance of adequate fracture toughness of the RPV is established using methods to estimate the RT_{NDT} (Reference 5). The fracture toughness properties of the reactor vessel wall material surrounding the irradiated core region are the limiting properties. The stringent fracture toughness requirements were determined based on the ASME BPVC Section III-1971 Edition, and the 1972 Summer Addenda. The estimated RT_{NDT} uses as a guide the fracture toughness requirements of NB2300 of the Summer 1972 Addenda, which meet the intent of 10 CFR Part 50, Appendix G. For materials not in the beltline region, RT_{NDT} was estimated using methods identified in Section 5.3.2 of the NRC Standard Review Plan. The upper-shelf energy level of the material is established using methods (Reference 5), which are responsive to 10 CFR Part 50, Appendix G.

The DCPP Unit 1 and Unit 2 reactor vessels were fabricated to the 1965 Edition through the Winter 1966 Addenda for Unit 1, and the 1968 Edition for Unit 2, of the ASME BPVC Section III. Thus, Charpy impact test orientation was parallel to the working or rolling direction of the base materials. Additional impact tests were performed, however, on the intermediate and lower shell course plates of both vessels. These plates surround the effective height of the fuel assemblies. Full Charpy test curves were obtained on these plates from specimens oriented normal to the principal rolling direction. Full Charpy curves for all the base material in the vessels have been obtained by the fabricator on impact specimens oriented parallel to the principal working or rolling direction. Reactor vessel fracture toughness data are provided in Tables 5.2-17A and 5.2-18A, and Tables 5.2-17B and 5.2-18B for Unit 1 and Unit 2, respectively.

The RVCH was manufactured to the requirements of the ASME BPVC Section III, 2001 Edition with Addenda through 2003. Fracture toughness data is provided in Table 5.2-17B.

Reactor vessel beltline region weld test specimens were taken from weldments prepared from excess production plate, weld wire, and flux materials. After completion of welding, the weldments were subjected to heat treatment to obtain the metallurgical effects equivalent to those produced during fabrication of the reactor vessel. The significant properties (e.g., weld wire chemical composition and weld flux type) of the weld materials in the beltline region were representative of the actual beltline materials and their fracture toughness. The use of test specimens prepared from excess production plate, weld wire, and flux materials and subjected to heat treatment satisfies the intent of the specific requirement of 10 CFR Part 50, Appendix G, Section III.C.2 and ensures an adequate margin of safety.

Two hundred forty bolting material specimens were impact tested at 10°F. The average of all the impact energy values was 50.5 ft-lb. The lateral expansion was measured on 24 specimens, and an average value of 35 mils was recorded. Fracture energy values obtained on 90 percent of the 240 specimens tested at 10°F either met or exceeded the fracture toughness requirements of 10 CFR Part 50, Appendix G. The lowest value of 40 ft-lb. exceeded the special mechanical property requirements of paragraph N-330 of

the 1965 Edition of the ASME BPVC, which states that an average of 35 ft-lb. fracture energy is considered adequate for pressure vessel materials to be pressurized at ambient temperature (70°F).

5.2.2.4.2 Acceptable Fracture Energy Levels

The identification and location of reactor vessel beltline region materials for Unit 1 and Unit 2 are shown in Figures 5.2-1 and 5.2-4, respectively. Chemical composition, fracture toughness properties, estimates of maximum anticipated $\Delta RT_{NDT,}$ and upper-shelf energy at the end-of-license fluence at the vessel wall 1/4 thickness location for materials in the beltline region are provided in Tables 5.2-18A through 5.2-21B for Unit 1 and Unit 2.

The stresses due to gamma heating in the vessel walls were also calculated and combined with the other design stresses. They were compared with the code-allowable limit for mechanical plus thermal stress intensities to verify that they are acceptable. The gamma stresses are low and thus have a negligible effect on the stress intensity in the vessel.

5.2.2.4.3 Operating Limitations During Startup and Shutdown

Allowable pressures as a function of the rate of temperature change and the actual temperature relative to the reactor vessel RT_{NDT} are established according to the methods in the 1972 NDT Summer Addenda of the ASME BPVC Section III, Appendix G. Heatup and cooldown curves are provided in the DCPP Pressure Temperature Limits Report. The heatup and cooldown curves are based on the estimated RT_{NDT} fracture toughness properties of the reactor vessel materials. Toughness data for the reactor vessel base materials are provided in Tables 5.2-17A and 5.2-17B for Unit 1 and Unit 2, respectively.

Predicted reference temperature at pressurized thermal shock (RT_{PTS}) values and upper shelf energy (USE) are derived in the limiting materials by using the method described in Reference 27, 10 CFR 50.61, 10 CFR Part 50, Appendix G, and the maximum fluence for the applicable service period.

For the Unit 1 end of operating license (EOL) at approximately 35.2 effective full-power years (EFPY) on 11/2/2024, the limiting RT_{PTS} values calculated and their respective 10 CFR 50.61 screening limits are:

- RT_{PTS} (weld 3-442C) = 258.7 °F, which is <270 °F plate or axial weld limit
- RT_{PTS} (weld 9-442) = 198.7 °F, which is <300 °F circumferential weld limit

For the Unit 2 EOL at approximately 35.8 EFPY on 8/26/2025, the limiting RT_{PTS} values calculated and their respective 10 CFR 50.61 screening limits are:

- RT_{PTS} (weld 2-201B) = 224.4 °F, which is <270 °F plate or axial weld limit

- RT_{PTS} (weld 9-201) = 34.4 °F, which is <300 °F circumferential weld limit

10 CFR Part 50, Appendix G requires that the USE remain ≥ 50 foot pounds (ft-lbs) throughout the life of the vessel at 1/4T. For Unit 1, the limiting (minimum) 1/4T USE at EOL is 61.1 ft-lbs. This is predicted to occur for axial weld 3-442C. Similarly, for Unit 2, the limiting (minimum) 1/4T USE at EOL is 56.2 ft-lbs. This is predicted to occur for axial weld 3-201C.

5.2.2.4.4 Compliance with Reactor Vessel Material Surveillance Program Requirements

The toughness properties of the reactor vessel beltline material will be monitored throughout the service life with a material surveillance program that meets the requirements of 10 CFR Part 50, Appendix H. The original surveillance test program (Reference 11) for DCPP Unit 1 complies with ASTM E 185-70, the standard in effect when the vessel was manufactured. With three exceptions, the program also complies with ASTM E 185-73. The exceptions are the number of capsules in the program containing the limiting material, the number of Charpy specimens in each capsule, and the orientation of the base metal specimens.

A supplemental surveillance program was implemented at the Unit 1 fifth refueling outage to improve the existing program by bringing the overall surveillance program in better compliance with ASTM E 185-82, provide data for the period beyond which the original surveillance program was designed, and to provide the necessary data to demonstrate the effectiveness of reactor vessel thermal annealing. Capsule D from Unit 1, which was meant to be annealed and reinserted into the reactor vessel, was removed during 1R12 and is stored in the spent fuel pool. There are currently no industry plans to anneal reactor vessels. The Unit 1 supplemental surveillance program is described in References 28 and 29. For Unit 2, the specimen orientation, number, selection procedure, and removal schedule conform to ASTM E 185-73. The surveillance capsule program for Unit 2 is described in Reference 26.

5.2.2.4.4.1 Program Description

The evaluation of radiation damage is based on pre-irradiation testing of Charpy V-notch and tensile specimens, and post-irradiation testing of Charpy V-notch, and tensile specimens; plus wedge opening loading (WOL) fracture mechanics test specimens for Unit 1 and compact tension and bend bar fracture mechanics test specimens for Unit 2. These programs are based on transition temperature and fracture mechanics approaches, and conform with ASTM E-185, Recommended Practice for Surveillance Tests for Nuclear Reactor Vessels and 10 CFR Part 50, Appendix H. Thermal control specimens are not required since the surveillance specimens will be exposed to the combined neutron irradiation and temperature effects, and the test results will provide the maximum transition temperature shift. The surveillance program for Unit 2 does not include correlation monitors, but the program for Unit 1 does.

Neutron dosimeters included in the capsules can be used to measure exposure throughout the life of the reactor vessel.

5.2.2.4.4.2 Surveillance Capsules

The Unit 1 original reactor vessel surveillance program included eight specimen capsules and the supplemental surveillance program consists of four additional specimen capsules. The Unit 2 surveillance program consists of six specimen capsules. The Type II capsules in Unit 1 and all of the Unit 2 capsules utilize fissionable materials (uranium-238 and neptunium-237) as neutron dosimeters. The fissionable materials, in the form of U_30_8 and $Np0_2$ powder, are encapsulated in metal (brass or stainless steel) capsules, which are sealed in steel blocks. The capsules are located in guide baskets welded to the outside of the thermal shield and neutron shield pads for Unit 1 and Unit 2, respectively, and are positioned directly opposite the center portion of the core. Sketches showing the location and spacing of the capsules for Unit 1 relative to the core, thermal shield, vessel, and weld seams are shown in Figures 5.2-16 and 5.2-17. Sketches showing the location and spacings of the capsules for Unit 2 are shown in Figures 5.2-18 and 5.2-19. The capsules can be removed when the vessel head and upper internals are removed and can be replaced when the lower internals are removed.

The eight capsules in the Unit 1 original surveillance program contain reactor vessel steel specimens from the intermediate shell plate or plates located in the core region of the reactor. The three Type II capsules also contain weld metal and heat affected zone specimens. All of the base material specimens are oriented parallel to the principal rolling direction. In addition, correlation monitors made from fully documented specimens of SA-533, Grade B, Class 1 material obtained through Subcommittee II of ASTM Committee E10, Radioisotopes and Radiation Effects, are inserted in the capsules of Unit 1 only. The eight capsules contain 27 tensile specimens, 256 Charpy V-notch specimens (which include weld metal and heat affected zone material), and 42 WOL specimens.

The four supplemental surveillance capsules for Unit 1 contain Charpy impact and tensile specimens machined from intermediate shell plate 4107-1, and oriented such that the specimen longitudinal axis is normal (transverse) to the plate principal rolling direction. Shell plate 4107 is the limiting base metal at 48 EFPY. These four capsules also contain surrogate weld metal specimens obtained from ABB Combustion Engineering. These surrogate weld specimens were made with the same weld wire heat (27204) and flux type (Linde 1092) as the Unit 1 reactor vessel limiting weld metal, and are representative of the Unit 1 limiting weld. The four capsules will also contain various Charpy specimens supplied by Electric Power Research Institute (EPRI) which will be used to obtain data on the effects of a reactor vessel thermal anneal. Two of the capsules will also contain previously irradiated test material from surveillance capsule S. This material consists of heat-affected zone and limiting weld metal broken Charpy specimens (which can be reconstituted into testable specimens), and weld metal WOL specimens. The 4 capsules contain 266 Charpy specimens, 24 tensile specimens, 17

reconstitution blanks from surveillance capsule S tested Charpy specimens, and 2 WOL specimens.

The six capsules for Unit 2 contain reactor vessel steel specimens oriented both parallel and normal (longitudinal and transverse) to the principal rolling direction of the limiting shell plate located in the core region of the reactor and associated weld metal and heat affected zone metal. The six capsules contain 54 tensile specimens, 360 Charpy V-notch specimens (which include weld metal and heat affected zone material), 72 compact tension specimens, and six bend bar specimens.

Dosimeters including Ni, Co, Fe (Unit 2 only), Co-Al, Cd shielded Co-Al, Cd shielded Np-237, and Cd shielded U-238 are placed in filler blocks drilled to contain the dosimeters. The dosimeters permit evaluation of the flux seen by the specimens and the vessel walls. In addition, thermal monitors made of low melting alloys are included to monitor the temperature of the specimens. The specimens are enclosed in a tight fitting stainless steel sheath to prevent corrosion and ensure good thermal conductivity. The complete capsule is helium leak tested. Vessel base material sufficient for at least two capsules will be kept in storage should the need arise for additional replacement test capsules in the program. Sufficient weld metal and heat affected zone material from Unit 2 for two additional capsules will also be stored. No additional weld metal or heat affected zone material is available for Unit 1.

As part of the surveillance program, a report of the residual elements in weight percent to the nearest 0.01 percent will be made for surveillance material and as deposited weld metal. Each of five Type I (base metal only) capsules (T, U, W, X and Z) for Unit 1 contains the following specimens:

Material	No. of Charpys	No. of Tensiles	No. of WOL
Plate No. B4106-1	8	1	2
Plate No. B4106-2	8	1	2
Plate No. B4106-3	8	1	2
ASTM Reference	8	-	-

The following dosimeters and thermal monitors are included in each of the five capsules:

Dosimeters

Copper
Nickel
Cobalt-aluminum (0.15% Co.)
Cobalt-aluminum (cadmium shielded)

Thermal Monitors

97.5% Pb, 2.5% Ag (579°F melting point)
97.5% Pb, 1.75% Ag, 0.75% Sn (590°F melting point)

Each of the three Type II capsules (S, V and Y) for Unit 1 contains the following specimens:

Material	No. of Charpys	No. of Tensiles	No. of WOL
Plate No. B4106-3	8	2	2
Weld Metal[(a)]	8	2	2
Heat Affected Zone Metal (Plate B4106-3)	8	-	-
ASTM Reference	8	-	-

(a) Weld fabricated from weld wire heat number 27204 using Linde 1092 Flux Lot No. 3714.

The following dosimeters and thermal monitors are included in each of the three Type II capsules:

Dosimeters

Copper
Nickel
Cobalt-aluminum (0.15% Co.)
Cobalt-aluminum (cadmium shielded)
U-238 (cadmium shielded)
Np-237 (cadmium shielded)

Thermal Monitors

97.5% Pb, 2.5% Ag (579°F melting point)
97.5% Pb, 1.75% Ag, 0.75% Sn (590°F melting point)

The four supplemental capsules for Unit 1 contain the following specimens, dosimeters, and thermal monitors:

	CAPSULE A[(Note i)]		CAPSULE B[(Note i)]			CAPSULE C[(Note i)]		CAPSULE D[(Note ii)]	
	Charpy	Tension	Charpy	Tension	WOL	Charpy	Tension	Charpy	Tension
Weld Metal (Surrogate 27204)	15	3	15	3	—	30	3	15	3
Base Metal (Plate 4107-1)	15	3	15	3	—	15	3	15	3
Correlation Monitor (HSST-02 Plate)	12	—	8	—	—	—	—	—	—
Capsule S Weld Metal (Original 27204)	—	—	9 (Note iii)	—	2	—	—	8 (Note iii)	—

EPRI Specimens	—	—	30	—	—	35	—	46	—

Notes:

(i) Dosimeter wires: copper, iron, nickel and aluminum-0.15% cobalt (cadmium shielded and unshielded)
Fission dosimeters: neptunium-237 (cadmium oxide shielded), and uranium 238 (cadmium oxide shielded)
Thermal monitors: 97.5% Pb, 2.5% Ag (579°F melt point), 97.5% Pb, 1.75% Ag, 0.75% Sn (590°F melt point)

(ii) Capsule D will contain the following dosimeters:
Dosimeter wires: copper, iron, nickel and aluminum-0.15% cobalt (gadolinium shielded and unshielded)
Fission dosimeters: neptunium-237 (gadolinium shielded) and uranium 238 (gadolinium shielded)
Thermal monitors: will not be provided because annealing temperature will exceed the melting point of thermal monitors

(iii) Broken weld metal and heat-affected zone Charpy specimens from capsule S, suitable for reconstitution

Each of the six capsules for Unit 2 will contain the following specimens:

Material	No. of Charpys	No. of Tensiles	No. of Cts	No. of Bend Bars
Plate B5454-1[(a)]	15	3	4	
Plate B5454-1[(b)]	15	3	4	1
Weld Metal[(c)]	15	3	4	
Heat Affected Zone Metal (Plate B5454-1)	15			

(a) Specimens oriented parallel to the principal rolling direction (longitudinal).
(b) Specimens oriented normal to the principal rolling direction (transverse).
(c) Weld fabricated from weld wire heat numbers 21935 and 12008 using Linde 1092 Flux Lot No. 3869.

The following dosimeters and thermal monitors are included in each of the six capsules:

Dosimeters
Iron
Copper
Nickel
Cobalt-aluminum (0.15% Co)
Cobalt-aluminum (cadmium shielded)
U-238 (cadmium shielded)
NP-237 (cadmium shielded)

Thermal Monitors
97.5% Pb, 2.5% Ag (579°F melting point)
97.5% Pb, 1.75% Ag, 0.75% Sn (590°F melting point)

The fast neutron exposure of the specimens occurs at a faster rate than that experienced by the vessel wall with the specimens being located between the core and the vessel. Since these specimens experience accelerated exposure and are actual samples from the materials used in the vessel, the changes in material properties are representative of the vessel at a later time in life. Data from the fracture toughness specimens (WOL, compact tension, and bend bar) are expected to provide additional information for use in determining fracture toughness for irradiated material.

The reactor vessel surveillance capsules for Unit 1 are shown in Figure 5.2-16 and in Figure 5.2-18 for Unit 2.

Correlation between calculations and measurements on the irradiated samples in the capsules, assuming the same neutron spectrum at the samples and the vessel inner wall, is described in Section 5.2.2.4.4.5 and has indicated good agreement. The degree to which the specimens perturb the fast neutron flux and energy distribution is considered in the evaluation of the surveillance specimen data. The integrated flux calculations at the vessel wall are adjusted using the surveillance data to provide best estimate fluence values. The calculated maximum EOL fast neutron exposure at the vessel wall is 1.43×10^{19} n/cm^2 and 1.68×10^{19} n/cm^2 (E > 1 MeV) for Unit 1 and Unit 2, respectively.

5.2.2.4.4.3 Capsule Removal

For Unit 1 and Unit 2, the removal schedule conforms to 10 CFR Part 50, Appendix H. The schedule for removal of the Unit 1 and Unit 2 capsules is provided in Table 5.2-22.

5.2.2.4.4.4 Measurement of Integrated Fast Neutron (E > 1.0 MeV) Flux at the Irradiation Samples

The use of passive neutron sensors such as those included in the internal surveillance capsule dosimetry sets does not yield a direct measure of the energy-dependent neutron flux level at the measurement location. Rather, the activation or fission process is a measure of the integrated effect that the time-and energy-dependent neutron flux has on the target material over the course of the irradiation period. An accurate assessment of the average flux level and, hence, time integrated exposure (fluence) experienced by the sensors may be developed from the measurements only if the sensor characteristics and the parameters of the irradiation are well known.

In particular, the following variables are of interest:

(1) the measured specific activity of each sensor

(2) the physical characteristics of each sensor

(3) the operating history of the reactor

(4) the energy response of each sensor

(5) the neutron energy spectrum at the sensor location

In this section, the procedures used to determine sensor-specific activities, to develop reaction rates for individual sensors from the measured specific activities and the operating history of the reactor, and to derive key fast neutron exposure parameters from the measured reaction rates are described.

5.2.2.4.4.4.1 Determination of Sensor Reaction Rates

The specific activity of each of the radiometric sensors is determined using established ASTM procedures. Following sample preparation and weighing, the specific activity of each sensor is determined by means of a lithium-drifted germanium, Ge(Li), gamma spectrometer. In the case of the surveillance capsule multiple foil sensor sets, these analyses are performed by direct counting of each of the individual wires or, as in the case of U-238 and Np-237 fission monitors, by direct counting preceded by dissolution and chemical separation of cesium from the sensor.

The irradiation history of the reactor over its operating lifetime is obtained from NUREG-0020, "Licensed Operating Reactors Status Summary Report," or from other plant records. In particular, operating data are extracted on a monthly basis from reactor startup to the end of the capsule irradiation period. For the sensor sets utilized in the surveillance capsule irradiations, the half-lives of the product isotopes are long enough that a monthly histogram describing reactor operation has proven to be an adequate representation for use in radioactive decay corrections for the reactions of interest in the exposure evaluations.

Having the measured specific activities, the operating history of the reactor, and the physical characteristics of the sensors, reaction rates referenced to full power operation are determined from the following equation:

$$R = \frac{A}{N_o \, F \, Y \sum_j \frac{P_j}{P_{ref}} C_j \left[1 - e^{-\lambda t_j} \right] e^{-\lambda t_d}} \qquad (5.2\text{-}1)$$

where:

A = measured specific activity (dps/gm)
R = reaction rate averaged over the irradiation period and referenced to operation at a core power level of P_{ref} (rps/nucleus)
N_o = number of target element atoms per gram of sensor
F = weight fraction of the target isotope in the sensor material
Y = number of product atoms produced per reaction
P_j = average core power level during irradiation period j (MW)

P_{ref} = maximum or reference core power level of the reactor (MW)
C_j = calculated ratio of ϕ (E > 1.0 MeV) during irradiation period j to the time weighted averaged ϕ (E > 1.0 MeV) over the entire irradiation period
λ = decay constant of the product isotope (sec^{-1})
t_j = length of irradiation period j (sec)
t_d = decay time following irradiation period j (sec)

and the summation is carried out over the total number of monthly intervals comprising the total irradiation period.

In the above equation, the ratio P_j/P_{ref} accounts for month-by-month variation of power level within a given fuel cycle. The ratio C_j is calculated for each fuel cycle and accounts for the change in sensor reaction rates caused by variations in flux level due to changes in core power spatial distributions from fuel cycle to fuel cycle. For a single cycle irradiation C_j = 1.0. However, for multiple cycle irradiations, particularly those employing low leakage fuel management, the additional C_j correction must be utilized.

5.2.2.4.4.4.2 Corrections to Reaction Rate Data

Prior to using the measured reaction rates in the least squares adjustment procedure discussed in Section 5.2.2.4.4.4.3, additional corrections are made to the U-238 measurements to account for the presence of U-235 impurities in the sensors as well as to adjust for the build-in of plutonium isotopes over the course of the irradiation.

In addition to the corrections made for the presence of U-235 in the U-238 fission sensors, corrections are also made to both the U-238 and Np-237 sensor reaction rates to account for gamma ray induced fission reactions occurring over the course of the irradiation.

5.2.2.4.4.4.3 Least Squares Adjustment Procedure

Values of key fast neutron exposure parameters are derived from the measured reaction rates using the FERRET least squares adjustment code (Reference 12). The FERRET approach uses the measured reaction rate data, sensor reaction cross-sections, and a calculated trial spectrum as input and proceeds to adjust the group fluxes from the trial spectrum to produce a best fit (in a least squares sense) to the measured reaction rate data. The "measured" exposure parameters along with the associated uncertainties are then obtained from the adjusted spectrum.

In the FERRET evaluations, a log-normal least squares algorithm weights both the trial values and the measured data in accordance with the assigned uncertainties and correlations. In general, the measured values f are linearly related to the flux ϕ by some response matrix A:

$$f_i^{(s,\alpha)} = \sum_g A_{ig}^{(s)} \phi_g^{(\alpha)} \qquad (5.2\text{-}2)$$

where i indexes the measured values belonging to a single data set s, g designates the energy group, and α delineates spectra that may be simultaneously adjusted. For example,

$$R_i = \sum_s \sigma_{ig} \phi_g \tag{5.2-3}$$

relates a set of measured reaction rates R_i to a single spectrum ϕ_g by the multigroup reaction cross-section σ_{ig}. The log-normal approach automatically accounts for the physical constraint of positive fluxes, even with large assigned uncertainties.

In the least squares adjustment, the continuous quantities (i.e., neutron spectra and cross-sections) are approximated in a multigroup format consisting of 53 energy groups. The trial input spectrum is converted to the FERRET 53 group structure using the SAND-II code (Reference 13). This procedure is carried out by first expanding the 47 group calculated spectrum into the SAND-II 620 group structure using a SPLINE interpolation procedure in regions where group boundaries do not coincide. The 620-point spectrum is then re-collapsed into the group structure used in FERRET.

The sensor set reaction cross-sections, obtained from the ENDF/B-VI dosimetry file (Reference 14), are also collapsed into the 53 energy group structure using the SAND-II code. In this instance, the trial spectrum, as expanded to 620 groups, is employed as a weighting function in the cross-section collapsing procedure. Reaction cross-section uncertainties in the form of a 53 x 53 covariance matrix for each sensor reaction are also constructed from the information contained on the ENDF/B-VI data files. These matrices include energy group-to-energy group uncertainty correlations for each of the individual reactions.

Due to the importance of providing a trial spectrum that exhibits a relative energy distribution close to the actual spectrum at the sensor set locations, the neutron spectrum input to the FERRET evaluation is obtained from plant-specific calculations for each dosimetry location. While the 53 x 53 group covariance matrices applicable to the sensor reaction cross-sections are developed from the cross-section data files, the covariance matrix for the input trial spectrum is constructed from the following relation:

$$M_{gg'} = R_n^2 + R_g R_{g'} P_{gg'} \tag{5.2-4}$$

where R_n specifies an overall fractional normalization uncertainty (i.e., complete correlation) for the set of values. The fractional uncertainties, R_g, specify additional random uncertainties for group g that are correlated with a correlation matrix given by:

$$P_{gg'} = [1-\theta]\ \delta_{gg'} + \theta\, e^{-H} \tag{5.2-5}$$

where:

$$H = \frac{(g - g')^2}{2\gamma^2}$$

The first term in the correlation matrix equation specifies purely random uncertainties, while the second term describes short-range correlations over a group range γ (θ specifies the strength of the latter term). The value of δ is 1 when g = g' and 0 otherwise.

5.2.2.4.4.5 Calculation of Integrated Fast Neutron (E > 1.0 MeV) Flux at the Irradiation Samples

Fast neutron exposure calculations for the reactor geometry are carried out using both forward and adjoint discrete ordinates transport techniques. A single forward calculation provides the relative energy distribution of neutrons for use as input to neutron dosimetry evaluations as well as for use in relating measurement results to the actual exposure at key locations in the pressure vessel wall. A series of adjoint calculations, on the other hand, establishes the means to compute absolute exposure rate values using fuel cycle-specific core power distributions, thus providing a direct comparison with all dosimetry results obtained over the operating history of the reactor.

In combination, the absolute cycle-specific data from the adjoint evaluations together with relative neutron energy spectra distributions from the forward calculation provided the means to:

(1) Evaluate neutron dosimetry from surveillance capsule locations.

(2) Enable a direct comparison of analytical prediction with measurement.

(3) Determine plant-specific bias factors to be used in the evaluation of the best estimate exposure of the RPV.

(4) Establish a mechanism for projection of pressure vessel exposure as the design of each new fuel cycle evolves.

5.2.2.4.4.5.1 Reference Forward Calculation

The forward transport calculation for the reactor is carried out in r, θ geometry using the DORT two-dimensional discrete ordinates code (Reference 15) and the BUGLE-93 cross-section library (Reference 16). The BUGLE-93 library is a 47 neutron group, ENDFB-VI based, data set produced specifically for light water reactor applications. In these analyses, anisotropic scattering is treated with a P_3 expansion of the scattering cross-sections and the angular discretization is modeled with an S_8 order of angular

quadrature. The reference forward calculation is normalized to a core midplane power density characteristic of operation at the stretch rating for the reactor.

The spatial core power distribution utilized in the reference forward calculation is derived from statistical studies of long-term operation of Westinghouse 4-loop plants. Inherent in the development of this reference core power distribution is the use of an out-in fuel management strategy, i.e., fresh fuel on the core periphery. Furthermore, for the peripheral fuel assemblies, a 2σ uncertainty derived from the statistical evaluation of plant-to-plant and cycle-to-cycle variations in peripheral power is used.

Due to the use of this bounding spatial power distribution, the results from the reference forward calculation establish conservative exposure projections for reactors of this design operating at the stretch rating. Since it is unlikely that actual reactor operation would result in the implementation of a power distribution at the nominal $+2\sigma$ level for a large number of fuel cycles and, further, because of the widespread implementation of low leakage fuel management strategies, the fuel cycle-specific calculations for this reactor will result in exposure rates well below these conservative predictions.

5.2.2.4.4.5.2 Cycle Specific Adjoint Calculations

All adjoint analyses are also carried out using an S_8 order of angular quadrature and the P_3 cross-section approximation from the BUGLE-93 library. Adjoint source locations are chosen at several key azimuths on the pressure vessel inner radius. In addition, adjoint calculations were carried out for sources positioned at the geometric center of all surveillance capsules. Again, these calculations are run in r, θ geometry to provide neutron source distribution importance functions for the exposure parameter of interest; in this case, ϕ (E > 1.0 MeV).

The importance functions generated from these individual adjoint analyses provide the basis for all absolute exposure projections and comparison with measurement. These importance functions, when combined with cycle-specific neutron source distributions, yield absolute predictions of neutron exposure at the locations of interest for each of the operating fuel cycles, and establish the means to perform similar predictions and dosimetry evaluations for all subsequent fuel cycles.

Having the importance functions and appropriate core source distributions, the response of interest can be calculated as:

$$\phi\,(R_0, \theta_0) = \int_r \int_\theta \int_E I\,(r, \theta, E)\;\; S(r, \theta, E)\;\; r\;\; dr\;\; d\theta\;\; dE \qquad (5.2\text{-}6)$$

where:

$\phi\,(R_0, \theta_0)$ = Neutron flux (E > 1.0 MeV) at radius R_0 and azimuthal angle θ_0

$I\,(r, \theta, E)$ = Adjoint importance function at radius r, azimuthal angle θ, and neutron source energy E

$S(r, \theta, E)$ = Neutron source strength at core location r,θ and energy E

It is important to note that the cycle-specific neutron source distributions, $S(r,\theta,E)$, utilized with the adjoint importance functions, $I(r,\theta,E)$, permit the use not only of fuel cycle-specific spatial variations of fission rates within the reactor core, but also allow for the inclusion of the effects of the differing neutron yield per fission and the variation in fission spectrum introduced by the build-in of plutonium isotopes as the burnup of individual fuel assemblies increases.

5.2.2.4.5 Reactor Vessel Annealing

HISTORICAL INFORMATION IN ITALICS BELOW NOT REQUIRED TO BE REVISED

There are no special design features that would prohibit the onsite annealing of the vessel. In the event that an annealing operation should be required to restore the properties of the vessel material opposite the reactor core because of neutron irradiation damage, a metal temperature of approximately 850°F maximum for a period of 168 hours maximum would be applied.

A plan for conducting the thermal annealing must be submitted in accordance with 10 CFR 50.4 at least three years prior to the date at which the limiting fracture toughness criteria in 10 CFR 50.61 or 10 CFR Part 50, Appendix G would be exceeded.

5.2.2.4.6 Loss-of-Coolant Accident Thermal Transient

HISTORICAL INFORMATION IN ITALICS BELOW NOT REQUIRED TO BE REVISED

In the event of a large LOCA, the RCS rapidly depressurizes and the loss of coolant may empty the reactor vessel. If the reactor is at normal operating conditions before the accident, the reactor vessel temperature is approximately 550°F, and, if the plant has been in operation for some time, part of the reactor vessel is irradiated. At an early stage in the depressurization transient, the ECCS rapidly injects cold coolant into the reactor vessel. This produces a thermal stress in the vessel wall. To evaluate the effect of the stress, three possible modes of failure are considered; ductile yielding, brittle fracture, and fatigue.

(1) Ductile Mode

The failure criterion used for this evaluation is that there shall be no gross yielding across the vessel wall using the material yield stress specified in the ASME BPVC Section III. The combined pressure and thermal stresses during injection through the vessel thickness as a function of time have been compared to the material yield stress during the SI transient.

The results of the analyses showed that local yielding may occur only in approximately the inner 18 percent of the base metal and in the vessel cladding, complying with the above criterion.

(2) Brittle Mode

The possibility of brittle fracture of the irradiated reactor vessel core region has been considered utilizing fracture mechanics concepts. This analysis takes into account the effects of water temperature, heat transfer coefficients, and fracture toughness as a function of time, temperature, and irradiation. Both a local crack effect and a continuous crack effect have been considered, with the latter requiring the use of a rigorous finite element axisymmetric code. On the weight of this evidence, the thermal shock resulting from the LOCA will not produce instability in the vessel wall even at the end of plant life.

(3) Fatigue Mode

The failure criterion used for fatigue analysis was based on the ASME BPVC Section III. In this method the piece is assumed to fail once the combined usage factor at the most critical location for all transients applied to the vessel exceeds the code-allowable usage factor of 1.

The location in the vessel below the nozzle level, which will see the emergency core cooling water and have the highest usage factor will be the incore instrumentation tube attachment welds to the vessel bottom head. As a worst case assumption, the incore instrumentation tubes and attachment penetration welds are considered to be quenched to the cooling water temperature while the vessel wall maintains its initial temperature before the start of the transient.

The maximum possible pressure stress during the transient is also taken into account. This method of analysis is quite conservative and yields calculated stresses greater than would actually be experienced. The resulting usage factor for the instrument tube welds considering all operating transients and including the SI transient occurring at the end of the plant life is below 0.2, which compares favorably with the code-allowable usage factor of 1.

It is concluded from the results of these analyses that the delivery of cold emergency core cooling water to the reactor vessel following a LOCA does not cause any loss of integrity of the vessel.

5.2.2.5 Austenitic Stainless Steel

The unstabilized austenitic stainless steel materials used in the RCPB, in systems required for reactor shutdown, and for emergency core cooling, are processed and fabricated using established methods and techniques to avoid partial or local sensitization. The measures taken to avoid sensitization are in general conformance with the recommendations of Regulatory Guide 1.44, May 1973 (Reference 22).

5.2.2.5.1 Cleaning and Contamination Protection Procedures

All materials are cleansed and protected by procedures that guard against contaminants capable of causing stress corrosion cracking during storage, fabrication, shipment, erection, testing and operation. Contaminant concentration limits are implemented per plant approved procedures.

5.2.2.5.2 Solution Heat Treatment Requirements

Whenever applicable, solution heat treatment of materials prior to fabrication or assembly into components or systems is discussed in Section 5.2.2.5.5 below. In such cases, solution heat treatment conformed to the requirements of Regulatory Guide 1.44, May 1973.

5.2.2.5.3 Material Inspection Program

Austenitic stainless steel materials are procured from raw material produced in the final heat-treated condition as required by the respective ASTM or ASME material specification for the particular type or grade of alloy.

Westinghouse-furnished wrought austenitic stainless steel alloy materials are corrosion tested in the final heat-treated condition. These tests are performed in accordance with ASTM A262.

5.2.2.5.4 Unstabilized Austenitic Stainless Steel

Unstabilized austenitic stainless steel used in components of the RCPB are as follows:

(1) Reactor Vessel

(a) (Unit 1) Primary nozzle safe-ends - Type 316 stainless steel forgings.

(Unit 2) Primary nozzle safe-ends - Type 316 stainless steel forgings overlaid with weld metal after final post-weld heat treatment.

(2) Steam Generators

Primary nozzle safe-ends - Grade F316LN forging.

(3) Pressurizers		Unit 1	Unit 2
(a)	Surge nozzle safe-end	Type 316 forging	Type 316L forging
(b)	Spray nozzle safe-end	Type 316 forging	Type 316L forging
(c)	Relief nozzle safe-end	Type 316 forging	Type 316L forging
(d)	Safety valve (3) nozzle safe-end	Type 316 forging	Type 316L forging

5.2.2.5.5 Avoidance of Sensitization

Methods and material techniques used to avoid partial or local severe sensitization are as follows:

(1) Core Structural Components

In all cases where austenitic stainless steel must be given a stress-relieving treatment above 800°F, a high-temperature stabilizing procedure was used. This is performed in the temperature range of 1600-1900°F, with holding time sufficient to achieve chromium diffusion to the grain boundary regions. Proof that such stabilization is achieved is based on ASTM A393.

(2) Stainless Welding

(a) Nozzle safe-ends

1. Weld deposit with Ni-Cr-Fe Weld Metal F-Number 43 and attach austenitic stainless steel safe-end after final post-weld heat treatment.

2. Use of a stainless steel weld metal analysis A-7 containing less than 0.02 percent carbon or more than 5 percent ferrite, or both.

(b) All welding is conducted using procedures that are in accordance with the ASME BPVC Section IX.

(c) All welding procedures and welders have been qualified to the ASME BPVC rules of Section IX.

When these welding procedure tests are performed on test welds made from base metal and weld metal materials that are from the same lot(s) of materials used in the fabrication of components,

additional testing is frequently required to determine the metallurgical, chemical, physical, corrosion, etc., characteristics of the weldment. The additional tests conducted on a technical case basis are as follows: light and electron microscopy, elevated temperature mechanical properties, chemical check analysis, fatigue tests, intergranular corrosion tests or static and dynamic corrosion tests within reactor water chemistry limitations.

(d) The interpass temperature of all welding methods is limited to 350°F maximum, with the exception of the RVCH cladding operations. The methodology used for the RVCH cladding weld operations was qualified using the guidance in Regulatory Guide 1.43, May 1973.

(e) Travel speed, voltage, amperage, as well as thickness of weld metal layers, and degree of weaving (two electrode diameters or ID of gas cup maximum) are carefully controlled on all welding processes to minimize sensitization in the completed welds.

(f) All welds are nondestructively examined in accordance with code requirements.

(g) Code-authorized inspectors are required to review and sign off on all welding done both in the shop and field.

(h) For the SGs, ferrite level is 5-18 percent, calculated by WRC sketch.

(3) Hard Facing

All hard facing procedures on austenitic stainless steel use low (less than 800°F) preheat temperatures to preclude sensitization of the base metal. Processes approved are limited to those proven by tests not to cause sensitization.

(4) Bent Pipe Sections

Bent pipe sections are solution heat-treated to produce nonsensitized conditions in the material after bending; this is done by controlling handling temperatures and water quenching time to ensure that all carbides are in solution.

5.2.2.5.6 Retesting Unstabilized Austenitic Stainless Steel Exposed to Sensitizing Temperatures

It is not normal Westinghouse practice to expose unstabilized austenitic stainless steels to the sensitization range of 800 to 1500°F during fabrication into components except as described in Section 5.2.2.5.5. If, during the course of fabrication, the steel is inadvertently exposed to the sensitization temperature range, 800 to 1500°F, the material may be tested in accordance with A262 to verify that it is not susceptible to intergranular attack. Testing is not required for:

(1) Cast metal or weld metal with a ferrite content of 5 percent or more.

(2) Material with a carbon content of 0.03 percent or less that is subjected to temperatures in the range of 800 to 1500°F for less than 1 hour.

(3) Material exposed to special processing provided the processing is properly controlled to develop a uniform product and provided that adequate documentation exists of service experience and/or test data to demonstrate that the processing will not result in increased susceptibility to intergranular stress corrosion.

If it was verified that such material was susceptible to intergranular attack, the material would have been solution annealed again and water quenched or rejected.

5.2.2.5.7 Control of Delta Ferrite

Welding of austenitic stainless steel was controlled to mitigate the occurrence of microfissuring or hot cracking in the weld. Although published data and experience have not confirmed that fissuring is detrimental to the quality of the weld, it is recognized that such fissuring is undesirable in a general sense. Also, the presence of delta ferrite is one of the mechanisms for reducing the susceptibility of stainless steel welds to hot cracking.

The scope of these controls encompassed welding processes used to join stainless steel parts in components designed, fabricated, or stamped in accordance with the ASME BPVC Section III, Classes 1, 2, and core support components. Delta ferrite control was appropriate for the above welding requirements except where no filler metal was used if for other reasons such control was not applicable. These exceptions included electron beam welding, autogenous gas shielded tungsten arc welding, explosive welding, and welding using fully austenitic welding materials.

In accordance with Section III, fabrication and installation specifications required welding procedure and welder qualification and included delta ferrite determinations for the austenitic stainless steel welding materials used for welding qualification testing and for production processing. Specifically, the undiluted weld deposits of the "starting" welding materials were required to contain a minimum of 5 percent delta ferrite as determined by chemical analysis and calculation using the appropriate weld metal constitution diagrams in Section III. New welding procedure qualification tests were

evaluated for these applications in accordance with the requirements of Sections III and IX.

The results of all the destructive and nondestructive tests were reported in the procedure qualification record in addition to the information required by Section III.

The "starting" welding materials used for fabrication and installation welds of austenitic stainless steel materials and components meet the requirements of Section III. Welding materials were tested using the welding energy inputs to be employed in production welding.

Combinations of approved heats and lots of starting welding materials were used for all welding processes. The welding quality assurance program included identification and control of welding material by lots and heats as appropriate. All of the weld processing was monitored according to approved inspection programs, including review of starting materials, qualification records, and welding parameters. Welding systems are also subject to quality assurance audit including calibration of gauges and instruments; identification of starting and completed materials; welder and procedure qualifications; availability and use of approved welding and heat treating procedures; and documentary evidence of compliance with materials, welding parameters, and inspection requirements. Fabrication and installation welds were inspected using nondestructive examination methods according to Section III rules.

5.2.3 SAFETY EVALUATION

5.2.3.1 General Design Criterion 2, 1967 - Performance Standards

Protection provided for the RCS against environmental factors is discussed in Sections 3.3, 3.4, 3.5 and 3.6. In the PG&E quality group classification of DCPP fluid systems and fluid system components, the vessels, piping, valves, pumps and their supports of the RCPB are designated as PG&E Design Class I, PG&E Quality/Code Class I. The RCPB is designed to the requirements of DE, DDE and Hosgri as described in Sections 5.2.2.1.10, 5.2.2.1.14 and 5.2.2.1.15.

As discussed in Sections 3.9.2.1, 3.9.2.2, and 3.9.2.3, the PG&E Design Class I mechanical systems and components are designed to withstand the effects of earthquakes. PG&E Design Class I mechanical systems and components are protected from the effect of winds and tornadoes (refer to Section 3.3), floods and tsunamis (refer to Section 3.4), and external missiles (refer to Section 3.5), ensuring their design function can be performed.

5.2.3.2 General Design Criterion 4, 1987 – Environmental and Dynamic Effects Design Bases

The LBB methodology was applied to the primary loops of DCPP Unit 1 and Unit 2. The following postulated breaks were eliminated: the six terminal ends in the cold, hot, and

crossover legs; a split in the SG inlet elbow; and the loop closure weld in the crossover leg. Protection from the dynamic effects of the most limiting breaks of auxiliary branch lines needs to be considered. This includes RCS branch line breaks and other high energy line breaks as described in Sections 5.2.2.1.9, 5.2.2.1.10, 5.2.2.1.11, 5.2.2.1.14, 5.2.2.1.15, and 5.2.2.1.16.

RCS leakage detection and monitoring is discussed in Section 5.2.3.6 for General Design Criterion 16, 1967 and Section 5.2.3.23 for Regulatory Guide 1.45, May 1973.

5.2.3.3 General Design Criterion 9, 1967 – Reactor Coolant Pressure Boundary

The RCPB is designed and constructed so as to have an exceedingly low probability of gross rupture or significant leakage throughout its lifetime. The RCPB is designed to accommodate the system pressures and temperatures attained under all expected modes of plant operation, including all anticipated transients, and to maintain the stresses within applicable stress limits. Refer to Section 5.2.2.1, Design of Reactor Coolant Pressure Boundary Components.

The RCPB is protected from overpressure by means of pressure-relieving devices as required by applicable codes. Refer to Section 5.2.2.2, Overpressurization Protection.

The materials of construction of the pressure-retaining boundary of the RCS are protected by control of coolant chemistry from corrosion that might otherwise reduce the system structural integrity during its service lifetime. Refer to Section 5.2.2.3, General Material Considerations.

Generic Letter 87-06, March 1987, applies to the RCPB. PIVs are defined for each interface as any two valves in series within the RCPB which separate the high pressure RCS from an attached low pressure system. These valves are normally closed during power operation. The PIVs are tested for leak tight integrity per Technical Specification 3.4.14.

Based on NRC Bulletin 88-11, December 1998, thermal stratification phenomenon could occur in the surge line and may invalidate the analyses supporting the integrity of the surge line with respect to unexpected bending and thermal striping (rapid oscillation of the thermal boundary interface along the piping inside surface) as they affect the overall integrity of the surge line for its design life (e.g., the increase of fatigue). Consistent with assumptions used and results obtained in the analysis, operating restrictions limit the pressurizer/hot leg differential temperature to 300°F.

5.2.3.4 General Design Criterion 11, 1967 - Control Room

Instrumentation and controls necessary to ensure the integrity of the RCPB are provided in the control room. This instrumentation and controls consist of RCPB

leakage detection, pressure boundary valve position indication, and post-accident RCS pressure indication.

Refer to Section 5.2.3.23 for further discussion on operational conditions which may indicate changes in RCPB leakage rates. The RCPB leakage detection instrumentation provided in the control room is listed on Table 5.2-16.

The PORV and PSV position indication and controls are provided in the control room. The PSV position indication system provides the necessary information in the control room to determine the position (open/close) of each of the three PSVs. Refer to Section 7.5.2.8 for details. Also the PORV block valves can be controlled from the control room to isolate the PORV if leaking. Temperature indication in the discharge piping of the PSV and PORVs is provided to identify leakage. RHR isolation valve control, valve position indication, and annunciation are provided in the control room as described in Section 7.6.2.1.

The instrumentation required for post-accident monitoring of the RCPB is discussed in Section 5.2.3.24.

Emergency close controls for the PORVs are provided on the HSP in addition to control from the control room (refer to Figure 7.3-21). Indication of RCS pressure is provided by the pressurizer pressure indication located at the HSP.

5.2.3.5 General Design Criterion 12, 1967 - Instrumentation and Controls

Instrumentation and controls are provided to monitor and maintain the RCPB.

Valve position indication is provided for RCPB remotely operated valves listed on Table 5.2-9. RHR isolation valve control, valve position indication, and annunciation are provided. PSV and PORV control and indication are provided as discussed in Section 5.2.3.4.

As described in Section 5.2.3.28, the LTOP function is completely automatic after being manually enabled. Whenever the system is enabled and reactor coolant temperature is below the low temperature setpoint (i.e., PORV arming temperature), a high-pressure signal will trip it automatically and open the PORV until the pressure drops below the reset value.

Regulatory Guide 1.45, May 1973, describes requirements for instruments available for implementing leakage detection systems for the RCPB. Refer to the discussion of reactor coolant leakage requirements in Section 5.2.3.23 and Table 5.2-16.

Instrumentation is provided to monitor RCS integrity following an accident. Instrumentation related to the RCPB which is required to meet Regulatory Guide 1.97, Revision 3, Criteria for Accident Monitoring Instrumentation for Nuclear Power Plants, is discussed in Section 5.2.3.24.

5.2.3.6 General Design Criterion 16, 1967 - Monitoring Reactor Coolant Pressure Boundary

RCPB components are designed, fabricated, inspected, and tested to the ASME codes and conditions as summarized in Tables 5.2-2 through 5.2-8. Leakage is detected by an increase in the amount of makeup water required to maintain a normal level in the pressurizer. The reactor vessel closure joint is provided with a temperature monitored leakoff between double gaskets. Leakage into the reactor containment is drained to the reactor building sump where the level is monitored. Leakage is also detected by measuring the airborne activity and quantity of the condensate drained from each reactor containment fan cooler unit (CFCU). Allowable total leakage rates for the DCPP units are presented in the Technical Specifications.

RCS identified leakage is limited to 10 gpm by Technical Specification 3.4.13. As prescribed by the Technical Specifications, a RCS water inventory balance shall be performed at least once every 72 hours, with exceptions as noted in the Technical Specifications. Tracking the RCS inventory in a consistent manner provides an effective means of quantifying overall system leakages.

Regulatory Guide 1.45, May 1973, describes acceptable methods of implementing this requirement with regard to the selection of leakage detection systems for the RCPB. Data on leak detection capabilities are provided in Section 5.2.3.23 and in Table 5.2-16.

5.2.3.7 General Design Criterion 33, 1967 - Reactor Coolant Pressure Boundary Capability

The RCPB is designed to withstand the static and dynamic loads imposed on boundary components as a result of an inadvertent and sudden release of energy to the coolant. Design transients are discussed in Section 5.2.2.1.5. Stress and pressure limits are discussed in Section 5.2.2.1.9. The stress analysis for structural integrity is discussed in Section 5.2.2.1.10. The static and dynamic load analyses are described in Sections 5.2.2.1.11, 5.2.2.1.14, 5.2.2.1.15, and 5.2.2.1.16.

5.2.3.8 General Design Criterion 34, 1967 – Reactor Coolant Pressure Boundary Rapid Propagation Failure Prevention

The RCPB is designed to minimize the probability of rapidly propagating type failures. RCS materials exposed to the coolant are corrosion-resistant stainless steel or Inconel. The NDT temperature of the reactor vessel material samples are established by Charpy V-notch and drop weight tests. The materials testing is consistent with 10 CFR Part 50, Appendices G and H. These tests also ensure that only materials with adequate toughness properties are used.

As part of the reactor vessel specification, certain additional tests are performed:

(1) Ultrasonic Testing

In addition to code requirements, the performance of a 100 percent volumetric ultrasonic test of reactor vessel plate for shear wave and a post-hydrotest ultrasonic map of all welds in the pressure vessel are required. Cladding bond ultrasonic inspection to more restrictive requirements than code is also required to preclude interpretation problems during ISI.

(2) Radiation Surveillance Program

In the surveillance programs, the evaluation of the radiation damage is based on pre-irradiation and post-irradiation testing of Charpy V-notch and tensile specimens. These programs are directed toward evaluation of the effect of radiation on the fracture toughness of reactor vessel steels based on the transition temperature approach and the fracture mechanics approach, and are in accord with ASTM-E-185, Recommended Practice for Surveillance Tests for Nuclear Reactor Vessels.

The inspections of reactor vessel, pressurizer, piping, pumps, and SGs are governed by ASME code requirements.

The allowable heatup and cooldown rates as well as the static loading stresses during plant life are predicted, using conservative values for the change in ductility transition temperature due to irradiation.

Refer to Sections 5.2.2.4.1 through 5.2.2.4.3 for discussion of tests that ensure only materials with adequate toughness properties are used per 10 CFR Part 50, Appendix G. Refer to Section 5.2.2.4.4 for discussion of 10 CFR Part 50, Appendix H requirements.

5.2.3.9 General Design Criterion 35, 1967 – Reactor Coolant Pressure Boundary Brittle Fracture Prevention

Testing and analysis of materials employed in RCS components is performed to ensure that the required NDT temperature limits specified in the criterion are met. Removable test capsules are installed in the reactor vessel and removed and tested at various times in the plant lifetime to determine the effects of operation on system materials. Details of the testing and analysis programs are discussed in Section 5.2.2.4, Fracture Toughness.

Close control is maintained over material selection and fabrication for the RCS. Materials exposed to the coolant are corrosion-resistant stainless steel or Inconel. Materials testing consistent with 10 CFR Part 50 assures that only materials with adequate toughness properties are used.

The fabrication and quality control techniques used in the fabrication of the RCS are equivalent to those used for the reactor vessel. The inspections of reactor vessel, SGs, pressurizer, pumps, and piping are governed by ASME code requirements.

5.2.3.10 General Design Criterion 36, 1967 – Reactor Coolant Pressure Boundary Surveillance

The design of the RCPB provides for accessibility during service life to the entire internal surface of the reactor vessel and certain external zones of the vessel, including the nozzle to reactor coolant piping welds and the top and bottom heads, except where control rod drive or instrument penetrations prevent access. The reactor arrangement within each containment provides sufficient space for inspection of the external surfaces of the reactor coolant piping, except for the area of pipe within the primary shielding concrete. The inspection capability complements the leakage detection systems in assessing the pressure boundary components' integrity.

Monitoring of the NDT temperature properties of each core region plate, forging, weldment, and associated heat-treated zones are performed in accordance with ASTM-E-185, Recommended Practice for Surveillance Tests on Structural Materials in Nuclear Reactors. Samples of reactor vessel plate materials are retained and cataloged in case future engineering development shows the need for further testing.

The material properties surveillance program includes not only the conventional tensile and impact tests, but also fracture mechanics specimens. The observed shifts in NDT temperature of the core region materials with irradiation are used to confirm the calculated limits to startup and shutdown transients.

To define permissible operating conditions below NDT temperature, a pressure range is established that is bounded by a lower limit for pump operation and an upper limit that satisfies reactor vessel stress criteria. To allow for thermal stresses during heatup or cooldown of the reactor vessel, an equivalent pressure limit is defined to compensate for thermal stress as a function of rate of change of coolant temperature. Since the normal operating temperature of the reactor vessel is well above the maximum expected NDT temperature brittle fracture during normal operation, it is not considered to be a credible mode of failure.

5.2.3.11 General Design Criterion 51, 1967 – Reactor Coolant Pressure Boundary Outside Containment

The RCPB is defined as those piping systems and components that contain reactor coolant at design pressure and temperature. With the exception of the reactor coolant sampling lines, the entire RCPB, as defined above, is located entirely within the containment structure. All sampling lines are provided with remotely operated valves for isolation in the event of a failure. These valves also close automatically on a containment isolation signal. Sampling lines are only used during infrequent sampling and can readily be isolated.

All other piping and components that may contain reactor coolant are low-pressure, low temperature systems which would yield minimal environmental doses in the event of failure.

The sampling system and low-pressure systems are described in Chapter 9. An analysis of malfunctions in these systems is included in Chapter 15.

5.2.3.12 Reactor Coolant Pressure Boundary Safety Function Requirement

(1) Protection from Missiles and Dynamic Effects

The RCPB is protected against postulated missiles sources generated within containment as described in Section 3.5. The design and fabrication of the RCPs ensure that a missile will not be generated under any anticipated accident as described in Section 5.2.3.20, Safety Guide 14, October 1971 and is, therefore, not a credible missile source as described in Section 3.5.

The RCPB is PG&E Design Class I equipment and therefore is designed to be protected against dynamic effects which may result from equipment failures as described in Section 3.6.

5.2.3.13 10 CFR 50.55a- Codes and Standards

For codes and standards applicability to the RCPB, refer to Section 5.2.2.1.3, Compliance with 10 CFR 50.55a; and Section 5.2.2.3, General Material Considerations. For description of the RCPB PG&E Quality/Code Class requirements refer to Section 5.2.2.1, Design of Reactor Coolant Pressure Boundary Components.

5.2.3.14 10 CFR 50.55a(f) – Inservice Testing Requirements

The IST requirements for the RCPB are contained in the DCPP IST Program Plan.

5.2.3.15 10 CFR 50.55a(g) - Inservice Inspection Requirements

The ISI program complies, except where relief is granted by the NRC, with the requirements of 10 CFR 50.55a(b)(2), in effect on May 7, 2014, and uses the ASME BPVC Section XI, 2007 Edition with 2008 Addenda, as the basis for the inservice examinations and tests conducted during the fourth 120-month inspection interval which commenced May 7, 2015 for Unit 1 and March 13, 2016 for Unit 2. Components that are designated ASME BPVC Class 1, 2, and 3 for ISIs are included in the ISI Program Plan (Reference 8). The ISI Program Plan also describes the pressure test program for pressure-retaining Code Class 1, 2, and 3 components; examination techniques; Code Cases; and compliance with ASME BPVC Section XI.

The third interval Containment Inservice Inspection Program Plan implements the ASME Code Section XI, Subsections IWE and IWL, 2007 Edition with 2008 Addenda within the limits and modifications of 10 CFR 50.55a. IWE exams o the metallic liner are performed on a 40-month frequency within the 10 year interval starting September 9th, 2018. Concrete shell exams occur on a 5-year frequency as specified by IWL 2410(a) with the initial examinations performed on November 2000 and August 2001 for Unit 1 and Unit 2 respectively.

HISTORICAL INFORMATION IN ITALICS BELOW NOT REQUIRED TO BE REVISED

The second interval Containment Inservice Inspection Program Plan implemented the ASME Code Section XI, Subsections IWE and IWL, 2001 Edition with 2003 Addenda, within the limits and modifications of 10CFR50.55a. IWE exams of the metallic liner are performed on a 40-month frequency within the 10 year interval starting September 9th, 2008. Concrete shell exams were performed on a 5-year frequency as specified by IWL 2410(a) with the initial examinations performed on November 2000 and August 2001, for Unit 1 and Unit 2 respectively.

As part of the inspection effort for Unit 1, a preservice inspection (PSI) program for Class 1, 2, and 3 systems was conducted in compliance with the requirements of ASME BPVC Section XI, 1974 Edition including the Summer 1975 Addenda, except where relief was granted by the NRC. For PSI piping examinations in Unit 1, the examination technique of Appendix III and the acceptance criteria of IWB-3514, both from the Winter 1975 Addenda of the ASME BPVC Section XI, were used. For Unit 2, a PSI program for Class 1, 2, and 3 systems was conducted in compliance with the requirements of ASME BPVC Section XI, 1977 Edition including the Summer 1978 Addenda, except where relief was granted by the NRC.

The ISI program for the first inspection interval for Unit 1 and Unit 2 met the requirements of the ASME BPVC Section XI, 1977 Edition including the Summer 1978 Addenda, except where relief was granted by the NRC. The ISI program for the second inspection interval for Unit 1 and Unit 2 met the requirements of the ASME BPVC Section XI, 1989 Edition without addenda, except where relief was granted by the NRC. The ISI program for the third inspection interval for Unit 1 and Unit 2 met the requirements of the ASME BPVC Section XI, 2001 Edition through 2003 Addenda, except where relief was granted by the NRC. Where examination techniques differed due to Code changes between the PSI and the ISI examinations, or between subsequent ISI examinations, the latest inservice examination data is used as the new baseline.

Design provisions for access to the reactor vessel are described in Section 5.4.1.5. Remote access and data acquisition methods have been developed to facilitate inspection of reactor vessel areas that are not readily accessible for direct examination. Areas that are inaccessible for the remote examination equipment are detailed in PG&E requests for relief that have been submitted to the NRC.

5.2.3.16 10 CFR 50.60 - Acceptance Criteria for Fracture Prevention Measures for Lightwater Nuclear Power Reactors for Normal Operation

Refer to Section 5.2.2.4, Fracture Toughness, for discussion of 10 CFR Part 50, Appendices G and H requirements.

5.2.3.17 10 CFR 50.61 - Fracture Toughness Requirements for Protection against Pressurized Thermal Shock Events

10 CFR 50.61 provides requirements for protection against pressurized thermal shock events involving rapid cooldown and high reactor vessel pressure.

10 CFR 50.61 requires projected values of RTpts for each reactor vessel beltline material using a fluence value, f, which is the EOL fluence for the material. DCPP Unit 1 and Unit 2 are currently licensed for 40 years of operation, which corresponds to 35.2 EFPY for Unit 1 and 35.8 EFPY for Unit 2. The projected EOL vessel fluence at the clad/base metal interface (OT) has been shown not to exceed the PTS screening criteria, i.e., an ART of 270°F for plates and axial welds, and an ART of 300 °F for circumferential welds, as required by 10 CFR 50.61. Refer to Section 5.2.2.4, Fracture Toughness, for discussion of Appendix G requirements.

5.2.3.18 10 CFR Part 50 Appendix G - Fracture Toughness Requirements

10 CFR Part 50, Appendix G specifies fracture toughness requirements for ferritic materials of pressure-retaining components of the RCPB of light water nuclear power reactors to provide adequate margins of safety during any condition of normal operation, including anticipated operational occurrences and system hydrostatic tests, to which the pressure boundary may be subjected over its service lifetime. Refer to Section 5.2.2.4, Fracture Toughness, for discussion of Appendix G requirements.

5.2.3.19 10 CFR Part 50 Appendix H - Reactor Vessel Material Surveillance Program Requirements

10 CFR Part 50, Appendix H implements a surveillance program to monitor changes in the fracture toughness properties of ferritic materials in the reactor vessel beltline region of light water nuclear power reactors which result from exposure of these materials to neutron irradiation and the thermal environment. Under the program, fracture toughness test data are obtained from material specimens exposed in surveillance capsules, which are withdrawn periodically from the reactor vessel. Refer to Section 5.2.2.4.4, Materials Surveillance, for discussion of 10 CFR Part 50, Appendix H requirements.

5.2.3.20 Safety Guide 14, October 1971 - Reactor Coolant Pump Flywheel Integrity

For the original reactor coolant pump (RCP) motors:

The flywheel consists of two thick plates bolted together. The flywheel material is produced by a process that minimizes flaws in the material and improves its fracture toughness properties; i.e., an electric furnace with vacuum degassing. Each plate is fabricated from SA-533, Grade B, Class 1 steel. Supplier certification reports are available for all plates and demonstrate the acceptability of the flywheel material on the basis of the requirements of Safety Guide 14, October 1971 (Reference 23).

Flywheel blanks are flame cut from SA-533, Grade B, Class 1 plates with at least ½ inch of stock left on the outer and bore surfaces for machining to final dimensions. The finished machined flywheels, including bores, keyways, and drilled holes, are subjected to magnetic particle or liquid penetrant examinations in accordance with the requirements of ASME BPVC Section III. The finished flywheels, as well as the flywheel material (rolled plate), are subjected to 100 percent volumetric ultrasonic inspection using procedures and acceptance standards specified in ASME BPVC Section III.

The RCP motors are designed such that, by removing the cover to provide access, the flywheel is available to allow an ISI program in accordance with the Technical Specifications.

Determining acceptability of the flywheel material involves two steps as follows:

(1) Establish a reference curve describing the lower bound fracture toughness behavior for the material in question.

(2) Use Charpy (CV) impact energy values obtained in certification tests at 10°F to fix position of the heat in question on the reference curve.

A lower bound K_{Id} reference curve (refer to Figure 5.2-7) has been constructed from dynamic fracture toughness data generated by Westinghouse (Reference 3) on A-533, Grade B, Class 1 steel. All data points are plotted on the temperature scale relative to the RT_{NDT}. The construction of the lower-bound curve below which no single test point falls, combined with the use of dynamic data when flywheel loading is essentially static, together represent a large degree of conservatism.

The applicability of a 30 ft-lb Charpy energy reference value has been derived from sections on Special Mechanical Property Requirements and Tests in Article 3, Section III, of the ASME BPVC. The implication is that the low test temperature of +10°F, and the 30 ft-lb. requirement at that temperature provide assurance that RT_{NDT} is less than +10°F. Flywheel plates exhibit an average value of 30 ft-lb or greater in the weak direction and, therefore, meet the specific Safety Guide 14, October 1971

requirement that RT_{NDT} must be no higher than 10°F. Making the conservative assumption that all materials in compliance with the code requirements are characterized by an RT_{NDT} of 10°F, it is possible to reassign the reference temperature position RT_{NDT} in Figure 5.2-7 to a value of 10°F.

Flywheel operating temperature at the surface is 120°F. The lower bound toughness curve indicates a value of 116 ksi-in$^{1/2}$ at the (NDT + 110) position corresponding to operating temperature. Thus, the Safety Guide 14, October 1971 requirement that the operating temperature be at least 100°F above RT_{NDT} is fulfilled.

At the time the flywheels were ordered, Charpy V-notch tests were required only at 10°F. However, by assuming a minimum toughness at operating temperature in excess of 100 ksi-in$^{1/2}$, it can be seen by examination of the correlation in Figure 5.2-8 that the C_V upper-shelf energy must be in excess of 50 ft-lb. Therefore, the requirement "b", that the upper-shelf energy must be at least 50 ft-lb, is satisfied.

It is concluded that flywheel plate materials are suitable for use and meet the Safety Guide 14, October 1971 acceptance criteria on the bases of suppliers' certification data.

The calculated stresses at operating speed are based on stresses due to centrifugal forces. The stress resulting from the interference fit of the flywheel on the shaft is less than 2000 psi at zero speed and becomes zero at approximately 600 rpm because of radial hub expansion.

The RCPs run at approximately 1190 rpm and may operate briefly at overspeeds of up to 109 percent (at 1295 rpm). For conservatism, however, 125 percent of operating speed was selected as the design speed for the RCPs. The flywheels are given a preoperational test prior to shipment at 125 percent of the operating speed.

Precautionary measures, taken to preclude missile formation from primary coolant pump components, ensure that the pumps will not produce missiles under any anticipated accident condition. Each component of the primary pump motors has been analyzed for missile generation. Any fragments of the motor rotor would be contained by the heavy stator. The same conclusion applies to the pump impeller because the small fragments that might be ejected would be contained by the heavy casing.

5.2.3.21 Regulatory Guide 1.14, Revision 1, August 1975 – Reactor Coolant Pump Flywheel Integrity

For replacement reactor coolant pump (RCP) motors:

The flywheel consists of two thick plates bolted together. The flywheel material is produced by a process that minimizes flaws in the material and improves its fracture toughness properties; i.e., an electric furnace with vacuum degassing. Each plate is fabricated from SA-533, Grade B, Class 1 steel. Supplier certification reports are available

for all plates and demonstrate the acceptability of the flywheel material on the basis of the requirements of Regulatory Guide 1.14, Revision 1, August 1975 (Reference 39).

Flywheel blanks are flame cut from SA-533, Grade B, Class 1 plates with at least ½ inch of stock left on the outer and bore surfaces for machining to final dimensions. The finished machined flywheels, including bores, keyways, and drilled holes, are examined for surface defects by a penetrant examination in accordance with the requirements of Section III of the ASME BPVC. The finished flywheels, as well as the flywheel material (rolled plate), are subjected to 100 percent volumetric ultrasonic inspection using procedures and acceptance standards specified in Section III of the ASME BPVC.

The RCP motors are designed such that, by removing the cover to provide access, the flywheel is available to allow and ISI program in accordance with the Technical Specifications.

Fracture toughness and tensile properties of each plate of flywheel material have been checked by tests that yield results suitable to confirm the applicability to that flywheel of the properties used in the fracture analyses called for in Regulatory Guide 1.14, Revision 1, on the bases of suppliers' certification data.

The calculated stresses at operating speed are based on stresses due to centrifugal forces. The stress resulting from the interference fit of the flywheel on the shaft is less than 2000 psi at zero speed and becomes zero at approximately 600 rpm because of radial hub expansion.

The RCPs run at approximately 1190 rpm and may operate briefly at overspeeds of up to 109 percent (at 1295 rpm). For conservatism, however, 125 percent of operating speed was selected as the design speed for the RCPs. The flywheels are given a preoperational test prior to shipment at 125 percent of the operating speed.

Precautionary measures, taken to preclude missile formation from primary coolant pump components, ensure that the pumps will not produce missiles under any anticipated accident condition. Each component of the primary pump motors has been analyzed for missile generation. Any fragments of the motor rotor would be contained by the heavy stator. The same conclusion applies to the pump impeller because the small fragments that might be ejected would be contained by the heavy casing.

For both original and replacement reactor coolant pump (RCP) motors:

The RCP Flywheel Inspection Program provides the ISI requirements for the RCP flywheel, which is in accordance with Regulatory Guide 1.14, Revision 1, Position C.4.b. Reference 39 demonstrates compliance with the RCP motor flywheel design requirements given by Regulatory Guide 1.14, Revision 1, in Position C.2.

An exception to the examination requirements given by Regulatory Guide 1.14, Revision 1, Positions C.4.b(1) and C.4.b(2) was granted based on Reference 32 allowing either an

ultrasonic volumetric or surface examination at ten year intervals. Subsequently, the examination frequency was extended to an interval not to exceed 20 years based on Reference 39.

In lieu of Position C.4.b(1) and C.4.b(2), a qualified in-place ultrasonic testing examination over the volume from the inner-bore of the flywheel to the circle one-half of the outer radius or a surface examination (MT and/or PT) of exposed surfaces of the removed flywheels may be conducted at an interval not to exceed 20 years.

5.2.3.22 Regulatory Guide 1.44, May 1973 – Control of the Use of Sensitized Stainless Steel

Regulatory Guide 1.44, May 1973, describes methods for control of the application and processing of stainless steel to avoid severe sensitization to diminish occurrences of stress corrosion cracking. The measures taken to avoid sensitization are in general conformance with the recommendations of Regulatory Guide 1.44, May 1973 (Reference 22) (refer to Section 5.2.2.5).

5.2.3.23 Regulatory Guide 1.45, May 1973 - Reactor Coolant Pressure Boundary Leakage Detection Systems

Means are provided to detect and, to the extent practical, identify the location of reactor coolant leakage sources. Detection systems with diverse modes of operation are used to ensure adequate surveillance with sufficient sensitivity so that increases in leakage rate can be detected before the integrated leakage rate reaches a value that could interfere with the safe operation of the plant. Section 5.2.3.23 discusses sources of reactor coolant leakage outside containment.

Regulatory Guide 1.45, May 1973 (Reference 25), described acceptable methods for selection of leakage detection systems for the RCPB. The construction permits for DCPP Unit 1 and Unit 2 were issued prior to the guidance of Regulatory Guide 1.45, May 1973. The RCPB leakage detection system meets the intent of Regulatory Guide 1.45, May 1973, to detect and monitor RCS leakage such that operators have sufficient time to take corrective actions (References 31 and 37).

5.2.3.23.1 Leakage Detection Methods

Systems using diverse methods and modes of operation are provided to continuously monitor environmental conditions within the containment, and to detect the presence of radioactive and nonradioactive leakage to the containment. Once operation begins, background levels are established, thereby providing a baseline for leakage detection. Deviations from normal conditions indicate possible changes in leakage rates and are monitored in the control room and the auxiliary building. Indications of leakage include changes in containment particulate and gaseous activity, containment sump level, containment condensation, and other volumetric measurement such as increased coolant makeup demand. A list of systems available to detect these changes is provided in Table 5.2-16.

5.2.3.23.1.1 Containment Radioactivity Monitors

Containment radioactivity monitors continuously monitor the air particulate and gaseous activity levels in the containment during normal plant operation. Leakage to the containment from the RCPB will result in changes in airborne radioactivity levels that can be detected by this equipment. Detector sensitivity, in terms of leakage rates, depends on the radioactivity level in the reactor coolant itself.

The containment radioactivity monitors measure beta and/or gamma activity in the containment by taking continuous air samples from the containment atmosphere. This sample flow first passes through the air particulate monitor and then through the gas monitor assembly. The sample is then returned to the containment. A complete description of the containment activity monitors, including sensitivity and control, indication, and alarm, is presented in Section 11.4.

5.2.3.23.1.2 Containment Sump Levels and Pump Operation

Leakage from the primary system would result in reactor coolant flowing into one of the containment sumps. Sump level and sump pump integrated flow is monitored to provide a measure of the overall leakage that remains in liquid state.

5.2.3.23.1.3 Containment Condensation Measurements

The containment condensation measuring system provides a measure of the amount of leakage vaporized (refer to Section 5.2.3.23.3). This system collects and measures moisture condensed from the containment atmosphere by the cooling coils of the fan cooler air circulation units. Moisture from leaks up to sizes permissible for continued plant operation will partially evaporate into the containment atmosphere and will be condensed on the fan cooling coils. This system dependably and accurately measures total vaporized leakage, including leakage from the cooling coils themselves. It measures the liquid runoff flowrate from the drain pans under each CFCU. The condensate measuring system consists of a vertical standpipe, valves, and instrumentation installed in the drain piping of the reactor CFCU.

Depending on the number of reactor CFCUs in operation, the drainage flowrate from each unit due to normal condensation can be determined. Additional or abnormal leaks will result in containment humidity and condensation runoff rate increases, and the additional leakage can then be measured.

5.2.3.23.1.4 Other Methods of Detection

(1) Charging Pump Operation

During normal operation only one charging pump is operating. If a gross loss of reactor coolant should occur which was not detected by the methods previously described, the flowrate mismatch of the charging and letdown flows would indicate RCS leakage.

(2) Liquid Inventory

Gross leakage can also be detected by an increase in the makeup rate to the RCS. This is inherently a low-precision indication, because makeup to the RCS is also required due to other process variables. A quantitative measurement of leakage requires a test over a reasonable period of time to establish changes in the physical inventory.

(3) Coolant Radiation Monitors

The component cooling liquid monitor continuously monitors the CCW system for activity indicative of a leak of reactor coolant from either the RCS or the RHR system loop in the CCW system. In addition, condenser offgas monitors and SG blowdown radiation detectors are available to detect SG tube leakage.

(4) Containment Atmosphere Temperature and Pressure Measurement

Various air temperature and pressure sensors would supplement indications of RCS leakage. Containment temperature and pressure fluctuate slightly during plant operation, but a rise above the normally indicated range of values may indicate RCS leakage into the containment. The accuracy and relevance of temperature and pressure measurements is a function of containment free volume and detector location. Alarm signals from these instruments would be valuable in recognizing rapid and sizable energy releases to the containment.

Thermoswitches are installed in the leakoff piping from RCS valves with restricted access during plant operation as a means of identifying the source of leakage (i.e., the specific valve) from a packing or bellows failure. Identified indicating lights, located in a routinely inspected area, are actuated by the thermoswitches. A control room alarm is provided for valve stem leakoff.

5.2.3.23.1.5 Visual and Ultrasonic Inspections

Visual and ultrasonic inspections of the RCPB will be made periodically during plant shutdown periods. Limited access to the containment is possible for this purpose during normal plant operation. The design of the reactor vessel and its arrangement in the system provides accessibility during service life to the entire internal surface of the vessel (except where access is limited by control rod drive or instrument penetrations). Access is also provided to the entire primary piping system, except for the area of pipe within the concrete biological shielding.

5.2.3.23.1.6 Reactor Coolant System Water Inventory Balance

As prescribed by the Technical Specifications, a RCS water inventory balance shall be performed at least once every 72 hours, with exceptions as noted in the Technical Specifications. Tracking the RCS inventory in a consistent manner provides an effective means of quantifying overall system leakages.

Data on other secondary methods of leak detection, such as pressurizer liquid level, VCT liquid level, charging pump flowrate, and PRT liquid level are provided in Table 5.2-16.

5.2.3.23.1.7 Indication in Control Room

Positive indications in the control room of coolant leakage from the RCS to the containment are provided by equipment that permits continuous monitoring of containment air activity, containment sump level changes, and of runoff from the condensate collecting pans under the cooling coils of the CFCUs. This equipment provides indication of normal background, which is indicative of a basic level of leakage from the RCS and components. An increase in observed parameters is an indication of

leakage within the containment, and the equipment provided is capable of monitoring this change.

As indicated in Table 5.2-16, numerous other forms of RCS leakage indication are provided in the control room or auxiliary building control area. Leakage detection systems are provided and located in a manner such that for minor leakages the operator can identify the subsystem that is leaking and effectively isolate that leakage with no more than short-term interruption of the operation of the complete system. Figures 5.2-14 and 5.2-15 are examples of the correlative relationships between radioactivity leak detector indications and the corresponding volumetric leak flowrate. This information is provided to the operator for a quick and easy interpretation of leakage conditions, and forms the basis for determining operator action.

5.2.3.23.2 Limits for Reactor Coolant Leakage

Operational leakage limiting conditions for RCS operation are presented in the Technical Specifications.

The Technical Specifications also present leakage limitations for the RCS PIVs listed in Table 5.2-23.

RCS PIVs protect low pressure ECCS systems such as the RHR system and the SI system from overpressurization and rupture of their low pressure piping which could result in a LOCA that bypasses the containment. Testing of these valves at least once per refueling interval during startup ensures a low probability of gross failure. Each PIV is required to be tested prior to returning the valve to service following maintenance, repair, or replacement work.

5.2.3.23.3 Unidentified Leakage

The sensitivity and response time of RCPB leakage detection systems vary for different methods of detection. However, the diverse systems available are required to have the capability to detect continuous leakage rates as low as 1 gpm within 1 hour for unidentified leaks at the design conditions and assumptions, as recommended by Regulatory Guide 1.45, May 1973 (Reference 25). The LBB analysis (Reference 42) demonstrates that this leak detection capability is sufficient to provide the margin of 10 on the leak rate in support of LBB (refer to Section 5.2.3.2, GDC 4, 1987).

The containment particulate monitor is the most sensitive instrument of those available for detection of reactor coolant leakage into the containment. This instrument is capable of detecting particulate radioactivity concentrations as low as 10^{-11} μCi/cc. The sensitivity of the air particulate monitor to an increase in reactor coolant leakage rate is dependent on the magnitude of the normal leakage into the containment. The sensitivity is greatest where normal leakage is low, as has been demonstrated by the experience of Indian Point Unit No. 1, Yankee Rowe, and Dresden Unit 1. Based on data from these operating plants, it is expected that this unit will detect (at the

95 percent confidence level) an increase in containment air particulate activity resulting in a gross count rate equivalent to 1 x 10^{-9} μCi/cc during normal full power operation. As shown in Figure 5.2-9, this system has adequate response to detect a 1 gpm leak within 1 hour assuming a reactor coolant particulate activity corresponding to as low as 0.1 percent fuel defects. The assumption of 0.1 percent fuel defects used in the design calculation is less than the percentage of failed fuel assumed in the Environmental Report (Reference 36) and follows the guidance of Regulatory Guide 1.45, May 1973 (References 25 and 37).

The containment radioactive gas monitor is inherently less sensitive (threshold at 10^{-7} μCi/cc) than the containment air particulate monitor, and would function in the event that significant reactor coolant gaseous activity results from fuel cladding defects. The sensitivity and range are such that gross count rates equivalent to from 10^{-6} to 10^{-3} μCi/cc will be detected. This system is also adequate to detect a 1 gpm leak within 1 hour assuming a reactor coolant gaseous activity corresponding to as low as 0.1 percent fuel defects as shown in Figure 5.2-9. The assumption of 0.1 percent fuel defects used in the design calculation is less than the percentage of failed fuel assumed in the Environmental Report and follows the guidance of Regulatory Guide 1.45, May 1973 (References 25 and 37).

The containment gaseous activity will result from any fission product gases (Kr-85, Xe-135) leaking from the RCS as well as from the argon-41 produced in the air around the reactor vessel. Assuming a constant background radioactivity in the containment atmosphere due predominantly to argon-41, and reactor coolant gaseous activity of 0.03 μCi/cc (corresponding to about 0.05 percent fuel defects), a 1-gpm coolant leak would double the fission product gas background in about 2 hours. The occurrence of a leak of 2 to 4 gpm would double the background in less than 1 hour. In these circumstances, this instrument is a useful backup to the air particulate monitor.

The adequacy of the containment particulate and radioactive gas monitors to detect a change in leakage during the initial period of plant operation will be limited by low coolant activity levels. The gas detector will not be as sensitive as the other leakage detection systems during this period because the argon-41 background will mask the low level of gaseous activity from coolant leakage.

Within the containment, the average air temperature is held at 120°F or below in accordance with the Technical Specifications. The hot dry air promotes evaporation of water leakage from hot systems, and the cooling coils of the fan cooler units provide a significant surface area at or below the dewpoint temperature. Therefore, under equilibrium conditions, the quantity of condensate collected by the cooling coils of the fan cooler units should be equal to the evaporated water leakage and steam leakage from systems within the containment.

To determine abnormal leakage rate inside the containment based on condensation measurements, it will first be necessary to determine the condensation rate from the fan coolers during normal operation. With the initiation of an additional or abnormal leak,

the containment atmosphere humidity will begin to increase but such an increase in humidity is reduced by additional condensation on the fan cooler tubes. (assuming that there is no large heat addition to the containment that could cause the cooling water temperature to increase.)

With the increasing specific and relative humidity, the heat removal capacity needed to cool the air-vapor mixture to its dewpoint decreases. Therefore, increases in available heat removal capacity (i.e., increases in the number of fans in operation) will result in added condensate flow. Through accurate measurement of condensate flow from the fan coolers, a reliable estimate of evaporated leakage inside the containment can be made.

A preliminary estimate of the evaporated leakage can be obtained from the condensate flow increase rate during the transient; a better estimate can be determined from the steady state condensate flow when equilibrium has been reached. After equilibrium is attained, condensate flow from approximately 0.1 to 30 gpm per detector can be measured by this system.

Except for the condensate measuring system, the sensitivities of the RCPB leakage detection systems are not significantly affected during plant operation with concurrent leaks from other sources. Condensation of moisture on the containment air cooler coils will produce a scrubbing effect for particulate activity, but is not expected to appreciably reduce particulate detector sensitivity.

When the plant is shut down, personnel can enter the containment to check visually for leaks. The lack of escaping steam or water during hydrostatic tests has been widely used as a criterion for leaktightness of pressurized systems. Detection of the location of significant leaks would be aided by the presence of boric acid crystals near a leak. The boric acid crystals are transported outside the RCS in the leaking fluid and then deposited by the evaporation process. Sensitivities and response times of other methods of leak detection are provided in Table 5.2-16 and in Figures 5.2-10 through 5.2-13.

5.2.3.23.4 Maximum Allowable Total Leakage

As discussed above, the reactor coolant leakage detection systems provide the capability for detecting extremely small leakage rates from the RCPB during normal operation. Signals from the various leak detectors are displayed in the control room and are used by the operators to determine if corrective action is required.

A limited amount of leakage is expected from the RCPB and from auxiliary systems within the containment. Although it is desirable to maintain leakage at a minimum, a maximum allowable total leakage rate is established and used as a basis for action by the reactor operator to initiate corrective measures. Allowable total leakage rates for the DCPP units are presented in the Technical Specifications. RCS identified leakage is limited to 10 gpm by Technical Specification 3.4.13.

5.2.3.23.5 Differentiation Between Identified and Unidentified Leaks

Generally, leakage into closed systems, or leakage into the containment atmosphere from sources that are both specifically located and known either not to interfere with the operation of the unidentified leakage monitoring systems or not to be from a flaw in the RCPB, are called identified leakages. Uncontained leakage to the containment atmosphere may be the result of a variety of possible leakages that are generally classified as unidentified leakages. Unidentified leakage is eventually collected in tanks or sumps where the flowrate can be established and monitored during operation.

5.2.3.23.5.1 Leakage Location Capability

Leakage detection systems have been designed to aid operating personnel, to the extent possible, in differentiating between possible sources of detected leakage within the containment and in identifying the physical location of the leak. Containment entry for visual inspection will, however, remain the only method of positively identifying the source and magnitude of leakage detected by remote sensing systems.

The containment monitoring system provides the primary means of remotely identifying the source and location of leakage within the containment. Increases in containment airborne activity levels detected by any of the monitor channels will indicate the RCPB as the source of leakage. Additionally, the capability of drawing monitored samples from several containment locations will allow localization of the general area of leakage since activity levels will be somewhat higher in the vicinity of the leakage source. Conversely, if the condensate measuring system detects increased containment moisture without a corresponding increase in airborne activity level, the indicated source of leakage would be judged to be a nonradioactive system, except when the reactor coolant activity may be low.

Less sensitive methods of leakage detection, such as unexplained increases in reactor plant makeup requirements to maintain pressurizer level, will also provide positive indication of the RCPB as the leakage source. Increases in the frequency of a particular containment sump pump operation will facilitate localization of the source to components whose leakage would drain to that sump. Leakage rates of the magnitude necessary to be detectable by these latter methods are expected to be noted first by the more sensitive radiation detection equipment.

5.2.3.23.5.2 Adequacy of Leakage Detection System

The component cooling liquid monitor continuously monitors the component cooling loop of auxiliary coolant for activity indicative of a leak of reactor coolant from either the RCS or the RHR system.

If an accident involving gross leakage from the RCS occurred, it would be detected by the following methods:

(1) Pump Operation

During normal operation, only one charging pump is operating. If a gross loss of reactor coolant occurred which was not detected by previously described methods, the difference between charging and letdown flowrate would indicate the leakage.

(2) Liquid Inventory

Gross leaks might be detected by unscheduled increases in the amount of reactor coolant makeup water, which is required to maintain the normal level in the pressurizer. Gross leakage would also be detected by a rise in the normal containment sump level.

(3) RHR Loop

The RHR loop removes residual and sensible heat from the core and reduces the temperature of the RCS during the second phase of plant shutdown. Tube leaks from the RHR heat exchangers during normal operation would be detected outside the containment by the component cooling loop radiation monitors.

Leakage detection systems are provided and located in a manner such that the operator can identify the subsystem, which is leaking and effectively isolate that leakage with no more than short-term interruption of the operation of the complete system.

5.2.3.23.6 Sensitivity and Operability Tests

Periodic testing of leakage detection systems will be conducted to verify the operability and sensitivity of detector equipment. These tests include installation calibrations and alignments, periodic channel calibrations, functional tests, and channel checks.
The containment monitoring system is calibrated on installation using typical isotopes of interest. Subsequent periodic calibrations using detector check sources will consist of single-point calibration to confirm detector sensitivity based on the known correlation between the detector response and the check source standard. This procedure will adequately measure instrument sensitivity since the geometry of the sampler cannot be significantly altered after the initial calibration. Channel checks to verify acceptable channel operability during normal operation and functional testing to verify proper channel response to simulated signals will also be conducted on a regular basis. A complete description of calibration and maintenance procedures and frequencies for the containment radiation monitor system is presented in Section 11.4. The condensate measuring system will also be periodically tested to ensure proper operation and verify sensitivity.

The equipment used, procedures involved, and frequency of testing, inspection surveillance and examination of the structural and leaktight integrity of RCPB components are described in detail in Section 5.2.3.14.

5.2.3.24 Regulatory Guide 1.97, Revision 3, May 1983 - Criteria for Accident Monitoring Instrumentation for Nuclear Power Plants

Instrumentation is provided to monitor RCS integrity following an accident. Instrumentation related to RCPB is required to meet Regulatory Guide 1.97, Revision 3. The requirements consist of continuous indication and recording of RCS level, RCS pressure, containment sump water level (wide and narrow ranges), containment pressure (normal range and wide range), high range containment area radiation monitor, condenser noble gas effluent radiation monitor. Refer to Table 7.5-6 for details.

Primary system relief valve continuous position indication and recording are provided for the PSVs (i.e., acoustic monitors). Refer to Section 7.5.2.8 for details. Position indication for the PORVs (i.e., valve position switches) is also provided.

5.2.3.25 Regulatory Guide 1.99, Revision 2, May 1988 - Radiation Embrittlement of Reactor Vessel Materials

Regulatory Guide 1.99, Revision 2, provides general procedures for calculating the effects of neutron radiation embrittlement of the low-alloy steels currently used in the DCPP Unit 1 and Unit 2 reactor vessels. Refer to Section 5.2.2.4 for information regarding predicted ΔRT_{NDT} values.

Generic Letter 88-11, July 1988, recommends the use of Regulatory Guide 1.99, Revision 2. For the DCPP reactor vessels, PG&E has committed to use the methodology in Regulatory Guide 1.99, Revision 2.

5.2.3.26 NUREG-0737 (Items II.B.1, II.D.1, II.D.3, II.K.2.13, and III.D.1.1), November 1980 - Clarification of TMI Action Plan Requirements

Item II.B.1 – Reactor Vessel Head Vent System: A RVHVS is provided to exhaust non-condensable gases and/or steam from the RCS that could inhibit natural circulation core cooling. The configuration of the RCS vent paths serves to minimize the probability of inadvertent or irreversible actuation while ensuring that a single failure of a vent valve power supply or control system does not prevent isolation of the vent path.

Item II.D.1 – Performance Testing of Pressurized-Water Reactor Relief and Safety Valves: A program has been implemented for testing of the PSVs, PORVs and block valves to qualify these components under expected design transients.

Item II.D.3 – Valve Position Indication for PSVs and PORVs: Positive PSV and PORV position indication is provided in the in the control room. Refer to Section 7.5.2.8 for details.

Item II.K.2.13 – Thermal Mechanical Report: An analysis has been performed to evaluate the effects of high pressure injection on vessel integrity for a SBLOCA. A generic report (Reference 40) provides a conservative bases for demonstrating that reactor vessel integrity is maintained for such an event. The conclusions of the generic report coupled with the requirements for protection of pressurized thermal shock demonstrate no loss of vessel integrity at EOL. Refer to Section 5.2.3.17 for discussion of protection against pressurized thermal shock events.

Item III.D.1.1 – Integrity of Systems Outside Containment Likely to Contain Radioactive Material for Pressurized-Water Reactors: DCPP implements a program to reduce leakage from systems outside the containment that would or could contain highly radioactive fluids during a severe transient or accident. The systems, or portions of systems, that are included in the leakage reduction program required by NUREG-0737, November 1980, and the reason for their inclusion, are as follows:

(1) The RHR and SI system that would circulate radioactive water from the RCS

(2) The containment spray system (CSS) that would circulate radioactive water from the containment sump

(3) The NSSS sampling system because of the highly radioactive fluids to be sampled

(4) The gaseous radwaste system (GRS) because it could be used to collect highly radioactive gases from the RCS

At intervals of approximately 24 months, operating pressure leak tests will be performed on appropriate portions of the SI system, the RHR system, the NSSS sampling system, and the CSS. Systems that normally contain liquids will be pressurized to normal operating pressure using systems pumps or hydro pumps. Each liquid system will be visually inspected during its pressure test so that leakage from the system can be measured and corrected. Systems that normally contain gases will be pressurized with a gas, and leakage will be determined using a calibrated leakrate monitor. If gaseous systems have excessive leakage, then leaks will be located using appropriate leak detection methods such as the soap bubble. After initial criticality, leakage from the GRS will be evaluated by monitoring the auxiliary building ventilation exhaust with radiation detectors.

5.2.3.27 Generic Letter 1989-10, June 1989 - Safety-Related Motor-Operated Valve Testing and Surveillance

The RCPB PG&E Design Class I and position changeable MOVs are subject to the requirements of Generic Letter 89-10, June 1989, and associated Generic Letter 96-05, September 1996, and meet the requirements of the DCPP MOV Program Plan. The PORV block valves are included in the MOV testing program.

5.2.3.28 Generic Letter 1990-06, June 1990 – "Enclosure B, Resolution of Generic Issue 94 – 'Additional Low-Temperature Overpressure Protection For Light-Water Reactors'"

Pressure/temperature limit curves are generated in accordance with WCAP-14040 (Reference 41) and are documented in the Pressure and Temperature Limits Report (PTLR) per Technical Specification 5.6.6. An exemption from certain requirements of 10 CFR 50.60, and 10 CFR Part 50, Appendix G allows the application of ASME Code Case N-514, "Low Temperature Overpressure Protection," in determining the acceptable LTOP system setpoints.

RCS overpressure protection during startup and shutdown is provided by the LTOP system, which consists of two mutually redundant and independent systems. Each system receives reactor coolant pressure and temperature signals. When a low-temperature, high-pressure transient occurs, it opens a pressurizer PORV until the pressure returns to within acceptable limits. During normal operation, the system is off. If the reactor coolant temperature is below the low temperature setpoint and the enable switch on the main control board is not in the enable position, an alarm will sound on the main annunciator. The operator can then enable the circuit before a water-solid condition is reached, and the system is then ready to operate without further operator action.

During startup, at the temperature at which the steam bubble is formed, the trip circuit is automatically defeated and the operator can disable the system later in the startup sequence.

The system is completely automatic after being manually enabled. Whenever the system is enabled and reactor coolant temperature is below the low temperature setpoint, a high-pressure signal will trip it automatically and open the PORV until the pressure drops below the reset value.

Features of the LTOP control system include: indicating lights and annunciator alarm when the system trips, indicating lights when the system is enabled, and annunciator alarm when the isolation valve for the PORV is closed and the system is enabled.

The LTOP system relieves the RCS pressure transient given a single failure. Since the two LTOP systems are mutually redundant and independent, failure of either one would not affect the remaining system.

The system is testable at all times. The pressurizer PORVs are in series with motor-operated block valves, which may be closed during testing. Test signals may be injected into the appropriate control circuits and the position of the valve monitored and timed.

All LTOP components meet PG&E Design Class I. Refer to Chapter 7 for IEEE-279-1971 (Reference 21) criteria. The electrical portions of the system are powered from Class 1E 125-Vdc power sources. The air to the valves is backed by bottled nitrogen.

5.2.4 REFERENCES

1. K. Cooper et al., Overpressure Protection for Westinghouse Pressurized Water Reactor, WCAP 7769, Revision 1, June 1972.

2. J. A. Nay, Topical Report, Process Instrumentation for Westinghouse Nuclear Steam Supply Systems, WCAP 7671, April 1971.

3. W. O. Shabbits, Dynamics Fracture Toughness Properties of Heavy Section A-533 Grade B Class 1 Steel Plate, WCAP-7623.

4. H. T. Corten, R. H. Sailors, Relationship Between Material Fracture Toughness Using Fracture Mechanics and Transition Temperature Tests, UILU-ENG 71-60010, August 1, 1972.

5. W. S. Hazelton et al., Basis for Heatup and Cooldown Limit Curves, WCAP-7924, July 1972.

6. MULTIFLEX 3.0, A Fortran IV Computer Program for Analyzing Thermal-Hydraulic-Structural System Dynamics Advanced Beam Model, WCAP-9735 Revision 2 (Proprietary) and WCAP-9736 Revision1 (Non-Proprietary), February 1998.

7. Deleted in Revision 23.

8. Diablo Canyon Power Plant - Inservice Inspection Program Plan - The Third 10-year Inspection Interval, Pacific Gas and Electric Company.

9. Structural Analysis of Reactor Coolant Loop/Support System for the Diablo Canyon Nuclear Generating Station Unit No. 1, SD-117.

10. Deleted in Revision 23.

11. PG&E Diablo Canyon Unit 1 Reactor Vessel Surveillance Program, WCAP-8465, January 1975.

12. Schmittroth, E. A., FERRET Data Analysis Code, HEDL-TME-79-40, Hanford Engineering Development Laboratory, Richland, Washington, September 1979.

13. McElroy, W. N., et al, A Computer-Automated Iterative Method of Neutron Flux Spectra Determined by Foil Activation, AFWL-TR-67-41, Volumes I-IV, Air Force Weapons Laboratory, Kirkland AFB, NM, July 1967.

14. RSIC Data Library Collection DLC-178, SNLRML Recommended Dosimetry Cross-Section Compendium, July 1994.

15. RSIC Computer Code Collection CCC-543, TORT-DORT Two- and Three-Dimensional Discrete Ordinates Transport, Version f2.8.14, January 1994.

16. RSIC Data Library Collection DLC-175, BUGLE-93, Production and Testing of the VITAMIN-B6 Fine Group and the BUGLE-93 Broad Group Neutron/Photon Cross-Section Libraries Derived from ENDF/B-VI Nuclear Data, April 1994.

17. H. P. Flatt and D. C. Baller, AIM-5, A Multigroup One Dimensional Diffusion Equation Code, NAA-SR-4694, March 1960.

18. Documentation of Selected Westinghouse Structural Analysis Computer Codes, WCAP-8252, Revision 1, May 1977.

19. Deleted in Revision 23.

20. Deleted in Revision 22.

21. IEEE-Std-279, Criteria for Protection Systems for Nuclear Power Generating Stations, 1971.

22. Regulatory Guide 1.44, Control of the Use of Sensitized Stainless Steel, May 1973.

23. Safety Guide 14, Reactor Coolant Pump Flywheel Integrity (for Comment), October 1971.

24. NUREG-0737, Clarification of TMI Plan Requirements, U. S. Nuclear Regulatory Commission, November 1980.

25. Regulatory Guide 1.45, Reactor Coolant Pressure Boundary Leakage Detection Systems, May 1973.

26. PG&E Diablo Canyon Unit 2 Reactor Vessel Radiation Surveillance Program, WCAP 8783, December 1976.

27. Regulatory Guide 1.99, Radiation Damage to Reactor Vessel Materials, Revision 2, May 1988.

28. Supplemental Reactor Vessel Radiation Surveillance Program For PG&E Diablo Canyon Unit 1 WCAP-13440, December 1992.

29. PG&E Letter to NRC No. DCL-92-072, Diablo Canyon Unit 1 - Supplemental Reactor Vessel Radiation Surveillance Program.

30. PG&E Letter to the NRC No. DCL-92-198 LER 1-92-015.

31. Letter from Sheri R. Peterson (NRC) to Gregory M. Rueger (PG&E), “Leak-Before-Break Evaluation of Reactor Coolant System Piping for DCPP Units 1 and 2,” March 2, 1993.

32. Strauch, P. L. et al, Topical Report on Reactor Coolant Pump Flywheel Inspection Examination, WCAP-14535A, November 1996

33. Diablo Canyon Units 1 and 2 Replacement Steam Generator Program – NSSS Licensing Report, WCAP-16638 (Proprietary), September 2007.

34. Deleted in Revision 23.

35. Deleted in Revision 23.

36. Letter from F. T. Searls (PG&E) to Atomic Energy Commission , dated August 9, 1971 , Enclosure "Environmental Report, Units 1 and 2 Diablo Canyon Site, Atomic Energy Commission Dockets 50-275, 50-323," dated July 1971.

37. Letter from Alan Wang (NRC) to John T. Conway (PG&E), "Diablo Canyon Power Plant, Unit Nos. 1 and 2 - Issuance of Amendments RE: Revision to Technical Specification 3.4.15, "RCS Leakage Detection Instrumentation," dated January 24, 2011.

38. Diablo Canyon Power Plant - Containment Inservice Inspection Program Plan- The Second 10-year Inspection Interval, Pacific Gas and Electric Company.

39. Straunch, P. L. et al, Extension of Reactor Coolant Flywheel Examination, WCAP 15666-A, Revision 1, October 2003.

40. T. A. Meyer, Summary Report on Reactor Vessel Integrity for Westinghouse Plants, WCAP-10019, December 1981.

41. Westinghouse Report WCAP-14040-NP-A, "Methodology Used to Develop Cold Overpressure Mitigating System Setpoints and RCS Heatup and Cooldown Limit Curves," Revision 2, January 1996.

42. WCAP-13039, Technical Justification for Eliminating Large Primary Loop Pipe Rupture as the Structural Design Basis for DCPP Units 1 and 2, Westinghouse Electric Corporation, November 1991.

43. NUREG-0484, Methodology for Combining Dynamic Responses, US Nuclear Regulatory Commission, Revision 1, May 1980.

5.2.5 REFERENCE DRAWINGS

Figures representing controlled engineering drawings are incorporated by reference and are identified in Table 1.6-1. The contents of the drawings are controlled by DCPP procedures.

5.3 THERMAL HYDRAULIC SYSTEM DESIGN

The overall objective of the reactor core thermal and hydraulic design is to provide adequate heat transfer, compatible with the heat generation distribution in the core, such that the performance and safety criteria requirements of Chapter 4 are met under all plant operating conditions.

5.3.1 ANALYTICAL METHODS AND DATA

The thermal and hydraulic design bases of the RCS are described in Sections 4.3 and 4.4 in terms of core heat generation rates, DNBR, analytical models, peaking factors, and other relevant aspects of the reactor.

5.3.2 OPERATING RESTRICTIONS ON REACTOR COOLANT PUMPS

The No. 1 seal is a controlled-leakage, film-riding face seal. To establish face plate separation and equilibrium for startup of the RCPs, the operating procedures ensure that the pressure differential across the No. 1 seal will be at least 200 psid before starting the RCP. To ensure sufficient NPSH, the RCS pressure must be maintained at a minimum of 325 psig (with RCS temperature compatible with the pressure), with the VCT pressure high enough to provide an effective back pressure on the No. 1 seal of at least 15 psig.

5.3.3 TEMPERATURE-POWER OPERATING MAP

The programmed relationship between RCS temperature and power for Unit 1 is shown in Figure 5.3-1. A similar relationship has been programmed for Unit 2 and the corresponding temperatures are also shown in Figure 5.3-1.

The effects of reduced core flow due to inoperative pumps are discussed in Sections 5.5.1, 15.2, and 15.3.

Natural circulation capability of the system is shown in Section 4.4.3.

5.3.4 LOAD-FOLLOWING CHARACTERISTICS

The RCS is designed on the basis of steady state operation at full power heat load. The RCPs utilize constant-speed drives as described in Section 5.5 and the average coolant temperature is controlled to have a value that is a linear function of load, as described in Section 7.7.

5.3.5 TRANSIENT EFFECTS

Evaluation of transient effects is presented as follows:

Event	FSAR Section
Complete loss of forced reactor coolant flow	15.3.4
Partial loss of forced reactor coolant flow	15.2.5
Loss of external electrical load and/or turbine trip	15.2.7
Loss of normal feedwater	15.2.8
Loss of offsite power	15.2.9
Accidental depressurization of the RCS	15.2.13

Component cyclic and transient design occurrences are contained in Table 5.2-4.

5.3.6 THERMAL AND HYDRAULIC CHARACTERISTICS SUMMARY TABLE

The thermal and hydraulic characteristics are provided in Tables 4.1-1 and 5.1-1.

5.4 REACTOR PRESSURE VESSEL AND APPURTENANCES

Section 5.4 discusses the design, material, fabrication, inspection, and quality provisions that apply to the RPV and its appurtenances.

5.4.1 REACTOR PRESSURE VESSEL DESCRIPTION

5.4.1.1 Design Bases

The RPV is an integral part of the RCPB and is designed to maintain its integrity under all anticipated modes of plant operation, including exposure to all foreseeable pressure and temperature transients and neutron flux during the life of the plant, by ensuring that all resulting stresses remain within allowable values. The RPV supports the reactor core and CRDMs.

5.4.1.2 Design Transients

Cyclic loads are introduced by normal power changes, reactor trip, startup, and shutdown operations. These design bases cycles are selected for fatigue evaluation and constitute a conservative design envelope for the projected plant life. RPV analysis results in a usage factor that is less than 1.

Regarding the thermal and pressure transients involved in the LOCA, the RPV is analyzed to confirm that the delivery of cold emergency core cooling water to the vessel following a LOCA does not cause a loss of RPV integrity.

The design specifications require analysis to prove that the RPV is in compliance with the fatigue limits of ASME BPVC Section III-1965 through Winter 1966 Addenda (Unit 1) and Section III-1968 (Unit 2). The loadings and transients specified for the analysis are based on the most severe conditions expected during service. The typical normal heatup and cooldown rates are less than the 100°F per hour upset or faulted condition rate used for design evaluation purposes. These rates are reflected in the vessel design specifications (refer to Section 5.2).

5.4.1.3 Codes and Standards

The manufacturer of the reactor vessels for Diablo Canyon Unit 1 and Unit 2 is Combustion Engineering, Inc., Chattanooga, Tennessee. Refer to Table 5.2-3 for procurement information on RCS components. Pursuant to 10 CFR 50.55a(c), the applicable ASME requirements for RPV design, fabrication, and material specifications are ASME BPVC Section III-1965 through Winter 1966 Addenda for Unit 1 and Section III-1968 for Unit 2.

The RVCH was manufactured by AREVA. Pursuant to 10 CFR 50.55a(c), the applicable ASME BPVC requirements for design, fabrication, and material specifications are the requirements of ASME BPVC Section III-2001 through 2003 Addenda.

5.4.1.4 Reactor Pressure Vessel Description

The RPV is cylindrical with a welded hemispherical bottom head and removable, bolted, flanged, and gasketed hemispherical RVCH. The RPV flange and head are each sealed by two hollow metallic O-rings. Seal leakage is detected by means of two leakoff channels: one between the inner and outer ring and one outside the outer O-ring. The RPV contains the core, core support structures, control rods, and other parts directly associated with the core.

The RVCH contains fifty-eight head adapters (nozzles). These head adapters are tubular members, attached by partial penetration welds to the underside of the closure head. The upper end of the head adapters are welded to a CRDM latch housing or instrument adapter. The upper end of these items contains threads for the assembly of a CRDM rod drive travel housing or CET column. The RVCH also contains dedicated nozzles for the head vent and RVLIS.

Inlet and outlet nozzles are spaced evenly around the RPVs. Outlet nozzles are located on opposite sides of the RPV to facilitate optimum layout of the RCS equipment. The inlet nozzles are tapered from the coolant loop RPV interfaces to the RPV inside wall to reduce loop pressure drop.

The IHA is a multi-function structure located on top of the RVCH. The IHA includes the RVCH lift rig, the CRDM ventilation system (including fans, shrouds, and plenum), the CRDM missile shield, radiation shielding, the RPV stud tensioner hoist monorail, cable bridges, personnel access platforms, and ladders. The IHA also includes a seismic support structure, which is an integral part of the IHA that provides lateral structural support for the IHA and CRDMs. The seismic support structure assembly includes eight seismic tie-rod restraints to transfer load from the IHA and the CRDMs to the reactor cavity walls. Figure 5.4-3 shows the major components included in the seismic support structure (some items attached to the support structure are excluded for clarity).

The bottom head of the RPV contains penetration nozzles for connection and entry of the nuclear incore instrumentation. Each nozzle consists of a tubular member made of an Inconel stainless steel composite tube. Each tube is attached to the inside of the bottom head by a partial penetration weld.

Internal surfaces of the RPV that are in contact with primary coolant are weld overlaid with 5/32-inch minimum of stainless steel. The exterior of the RPV is insulated with canned stainless steel reflective sheets. The insulation is 3 inches thick and contoured to enclose the top, sides, and bottom of the RPV.

A schematic of the RPV is shown in Figure 5.4-1 for Unit 1 and Figure 5.4-2 for Unit 2. RPV principal design parameters for both Unit 1 and Unit 2 are provided in Table 5.4-1.

5.4.1.5 Inspection Provisions

The internal surface of the RPV can be inspected using visual nondestructive techniques over the accessible areas. If necessary, the core barrel can be removed, making the entire inside surface of the RPV accessible.

The RVCH is examined visually during each refueling. Periodic visual inspections of accessible outer CRDM penetration tubes and the gasket seating surface are performed. The transition area between the dome and head flange, which is the area of highest stress of the RVCH, is accessible on the outer surface for visual inspection, surface examination, and ultrasonic testing. The closure studs, nuts, and washers can be inspected periodically using visual, magnetic particle, and/or ultrasonic techniques.

Full-penetration welds in the following irradiated areas of the installed RPV are available for visual and/or nondestructive inspection:

(1) RPV shell

(2) Primary coolant nozzles

(3) Bottom head

(4) Field welds between the RPV, nozzles, and the main coolant piping

The design considerations that have been incorporated into the system to permit the above inspections are as follows:

(1) All reactor internals are completely removable. Appropriate tools, and the storage space required to permit these inspections, are provided.

(2) The RVCH is stored dry on the reactor operating deck during refueling to facilitate direct visual inspection.

(3) All RPV studs, nuts, and washers are removed to dry storage during refueling.

(4) Removable plugs are provided in the primary shield. The insulation covering the nozzle welds may be removed.

(5) A removable plug is provided in the lower core support plate to allow remote access for inspection of the bottom head without removal of the lower internals.

The RPV presents access problems because of the radiation levels and remote underwater accessibility to this component. Because of these limitations, several steps have been incorporated into the design and manufacturing procedures in preparation for

the periodic nondestructive tests that are required by the ISI program, and in accordance with ASME BPVC Section XI-2001 through 2003 Addenda. These are:

(1) Shop ultrasonic examinations were performed on all internally clad surfaces to acceptance and repair standards that ensure an adequate cladding bond to allow later ultrasonic testing of the base metal from the inside surface. The size of cladding bonding defect allowed is 3/4-inch by 3/4-inch.

(2) The design of the RPV shell in the core area is a clean, uncluttered, cylindrical surface to permit positioning of the ISI test equipment without obstruction.

(3) After the shop hydrostatic testing, selected areas of the RPV were ultrasonically tested and mapped to facilitate the ISI program.

5.4.2 FEATURES FOR IMPROVED RELIABILITY

RPV performance reliability is based on a conservative design, adequate protection measures, proper selection of materials, appropriate fabrication processes, quality assurance program implementation, conservative operating procedures, and an adequate ISI and material surveillance program. Section 5.2 addresses RPV design, overpressure protection, material selection, pressure and temperature operating limitations, and surveillance programs. Fabrication and quality assurance measures are discussed below.

5.4.3 PROTECTION OF CLOSURE STUDS

Refueling procedures require the studs, nuts, and washers be removed from the RVCH and placed in storage racks during preparation for refueling. The storage racks are then removed from the refueling cavity for maintenance and inspection prior to reactor closure and refueling cavity flooding. Therefore, the RVCH studs are never exposed to the borated refueling cavity water.

The stud holes in the reactor flange are sealed with special plugs before removing the RVCH, thus preventing leakage of the borated refueling water into the stud holes.

5.4.4 MATERIALS AND INSPECTIONS

RPV materials are listed in Table 5.2-11. Construction, inspections and tests for the RPV and appurtenances are presented in Table 5.4-2. ISIs meet the requirements of ASME BPVC Section XI-2001 through 2003 Addenda, as referenced in 10 CFR 50.55a.

5.4.5 SPECIAL PROCESSES FOR FABRICATION AND INSPECTION

5.4.5.1 Fabrication Processes

(1) Minimum preheat requirements were established for pressure boundary welds using low alloy weld material. Special preheat requirements were added for stainless steel cladding of low-stressed areas. Preheat was maintained until post-weld heat treatment, except for overlay cladding. Limitations on preheat requirements (a) decrease the probabilities of weld cracking by decreasing temperature gradients, (b) lower susceptibility to brittle transformation, (c) prevent hydrogen embrittlement, and (d) reduce peak hardness.

(2) On Unit 2, the use of severely sensitized stainless steel as a pressure boundary material was prohibited and eliminated either by choice of material or by programming the assembly method. This restriction on the use of sensitized stainless steel provides the primary system with preferential materials suitable for:

(a) Improved resistance to contaminants during shop fabrication, shipment, construction, and operation

(b) Application of critical areas.

Refer to Sections 5.2.2.5 and 5.2.3.22 for discussion of sensitization of RCS components.

(3) Galling prevention is accomplished by chrome plating of the surfaces of the guide studs in the RPV flange.

(4) Cracking prevention is accomplished by ensuring that the final joining beads are Inconel weld metal at all locations in the RPV where stainless steel and Inconel are joined.

(5) Core region shells fabricated of plate material have longitudinal welds and are angularly located away from the peak neutron exposure experienced in the RPV.

5.4.5.2 Tests and Inspections

Tests and inspections for the RPV and appurtenances are listed in Table 5.4-2. They are discussed below.

5.4.5.2.1 Ultrasonic Examinations

The following ultrasonic examinations were performed:

(1) During fabrication, angle beam inspection of 100 percent of plate material is performed to detect discontinuities that may be undetected by longitudinal wave examination, in addition to the design code straight beam ultrasonic test.

HISTORICAL INFORMATION IN ITALICS BELOW NOT REQUIRED TO BE REVISED

(2) The RPV is examined after hydrotesting to provide a baseline map for use as a reference document in relation to later ISIs.

5.4.5.2.2 Penetrant Examinations

The partial penetration welds for the CRDM and instrument head adapters and RVHVS and RVLIS head penetration nozzles are inspected by dye penetrant after the first layer of weld material, after each 1/4-inch of weld metal, and the final surface. Bottom instrumentation tubes are inspected by dye penetrant after each layer of weld metal. Core support block attachment welds are inspected by dye penetrant after the first layer of weld metal and after each 1/2-inch of weld metal. This is required to detect cracks or other defects, to lower the weld surface temperatures for cleanliness, and to prevent microfissures. All austenitic steel surfaces are 100 percent dye penetrant tested after the hydrostatic test.

5.4.5.2.3 Magnetic Particle Examination

(1) All surfaces of quenched and tempered materials are inspected on the inside diameter prior to cladding and the outside diameter is 100 percent inspected after hydrotesting. This serves to detect possible defects resulting from the forming and heat treatment operations.

(2) The attachment welds for the RPV supports, lifting lugs, and refueling seal ledge are inspected after the first layer of weld metal and after each 1/2-inch of weld thickness. Where welds are back chipped, the areas are inspected prior to welding.

(3) All carbon steel surfaces are magnetic particle tested after the hydrostatic test.

5.4.6 QUALITY ASSURANCE SURVEILLANCE

The surveillance program that calls for RPV quality assurance provisions to verify proper fabrication and to ensure that integrity is maintained throughout the plant's lifetime, is listed in Table 5.4-2.

5.4.7 REACTOR PRESSURE VESSEL DESIGN DATA

The RPV design parameters are presented in Table 5.4-1.

5.4.8 REACTOR PRESSURE VESSEL EVAULATION

Section 5.2 presents an assessment of the stresses induced in the RPV during normal, upset, and faulted conditions, showing that in all cases they are below the respective allowable stresses (refer to Tables 5.2-5, 5.2-6, and 5.2-7).

5.5 COMPONENT AND SUBSYSTEM DESIGN

This section discusses performance requirements and design features of the various components of the RCS and associated subsystems.

5.5.1 REACTOR COOLANT PUMPS

Each unit has four identical RCPs, one in each loop.

5.5.1.1 Design Bases

The RCP ensures adequate core cooling by forced circulation flow, and hence sufficient heat transfer, to maintain a DNBR greater than the applicable limit value (refer to Sections 4.4.2.1 and 4.4.3.3) for all normal modes of operation. The required NPSH is, by conservative pump design, always less than that available by system design and operation.

Sufficient pump rotation inertia is provided by a flywheel, in conjunction with the impeller and motor assembly, to provide adequate flow during coastdown. This flow provides the core with adequate cooling, following an assumed loss of pump power.

The RCP motor has been tested without mechanical damage, at overspeeds up to and including 125 percent of normal speed (refer to Section 5.2.3.20).

The RCP is shown in Figure 5.5-1; its design parameters are provided in Table 5.5-1.

Code applicability and material requirements are provided in Tables 5.2-2 and 5.2-13, respectively.

5.5.1.2 Design Description

The RCP is a vertical, single-stage, centrifugal, shaft seal pump designed to pump large volumes of main coolant at high temperatures and pressures.

The pump consists of, from bottom to top, the hydraulic section, the shaft seal, and the motor. Each section is described as follows:

(1) The hydraulic section consists of an impeller, diffuser, casing, thermal barrier, heat exchanger, lower radial bearing, bolting ring, motor stand, and pump shaft.

(2) The shaft seal section consists of the No. 1 controlled leakage, film riding face seal, a shutdown seal (SDS) assembly, and the No. 2 and No. 3 rubbing face seals. The seals are contained within the main flange and seal housing.

(3) The motor section consists of a vertical solid-shaft, squirrel cage induction-type motor, and oil-lubricated double Kingsbury-type thrust bearing, two oil-lubricated radial bearings, and a flywheel.

Attached to the bottom of the pump shaft is the impeller. The reactor coolant is drawn up through the impeller, discharged through passages in the diffuser, and out through the discharge nozzle in the side of the casing. A thermal barrier heat exchanger above the impeller limits heat transfer between hot system water and pump internals. A weir plate, installed in the pump discharge nozzle, prevents excessive flow of ECCS injection water into the casing in the event of an SBLOCA.

High-pressure seal injection water is introduced through the thermal barrier wall. A portion of this water flows through the seals; the remainder flows downward into the RCS, where it acts as a buffer to prevent system water from entering the radial bearing and seal section of the unit. The heat exchanger provides a means of cooling system water entering the pump radial bearing and seal section to an acceptable level in the event that seal injection flow is lost. The water-lubricated journal-type pump bearing, mounted above the thermal barrier heat exchanger, has a self-aligning spherical seat.

The RCP motor bearings are of conventional design. The radial bearings are the segmented- pad-type and the thrust bearings are tilting pad Kingsbury bearings. All are oil-lubricated. The lower radial bearing and the thrust bearings are submerged in oil and the upper radial bearing is fed oil from the oil flow off the outer surface of the thrust runner.

The motor is an air-cooled squirrel cage induction motor. The insulation class of the motor is listed in Table 5.5-1. The rotor and stator are of standard construction and are cooled by air. A minimum of six RTDs are located throughout the stator to sense the winding temperature. The top of the motor consists of a flywheel and an anti-reverse rotation device.

Each RCP is equipped with a system to monitor shaft vibration. The system monitors pump shaft radial vibration, motor shaft radial vibration, and motor frame velocity. The two pump shaft radial vibration probes are mounted in a horizontal plane above the seal housing with one probe parallel to the pump discharge and the other perpendicular to the pump discharge. The two motor shaft vibration probes are mounted in a horizontal plane below the lower motor bearing with one probe parallel to the pump discharge and the other perpendicular to the pump discharge. The two velocity probes are mounted in a horizontal plane on the motor stand with one probe parallel to the pump discharge and the other perpendicular to the pump discharge. A keyphasor probe is mounted below the lower motor bearing and is used for spectral analysis and to measure pump speed. In the event that the signal from a probe becomes invalid and becomes a nuisance alarm the signal may be defeated, since the probes and cables are not accessible during power operation.

The instrumentation monitors are mounted in a common rack located on the operating deck in containment. Alarms in the control room are provided by the rack in containment. Vibration data from the instrument rack is collected and stored on a server in the control room, and analyzed at a personal computer in the administration building. The server and computer are shared by both units. The server or computer may be turned off to support maintenance or power switching, as the vibration equipment will still provide alarms and indication. If the server is off, indication requires connection of test equipment to the local rack. The RCP vibration monitoring system does not perform a PG&E Design Class I function.

As shown in Table 5.2-13, all parts of the pump in contact with the reactor coolant are austenitic stainless steel except for seals, bearings, and special parts. CCW is supplied to the two oil coolers on the pump motor and to the pump thermal barrier heat exchanger.

The pump shaft, seal housing, thermal barrier, bolting ring, and motor stand can be removed from the casing as a unit without disturbing the reactor coolant piping. The flywheel is available for inspection by removing the cover.

The performance characteristic, shown in Figure 5.5-2, is common to all of the fixed-speed mixed-flow pumps, and the "knee" at about 45 percent design flow introduces no operational restrictions since the pumps operate at full speed.

5.5.1.3 Design Evaluation

This section discusses RCP design features incorporated to ensure safe and reliable operation while maintaining RCS integrity.

5.5.1.3.1 Pump Performance

The RCPs are sized to equal or exceed the required flowrates (refer to Section 5.1.6). Initial RCS tests confirm the total delivery capability. Thus, assurance of adequate forced circulation coolant flow is provided prior to initial plant operation.

The RTS ensures that pump operation is within the assumptions used for loss-of-coolant flow analyses, which also ensures that adequate core cooling is provided to permit an orderly reduction in power if flow from an RCP is lost during operation.

HISTORICAL INFORMATION IN ITALICS BELOW NOT REQUIRED TO BE REVISED

An extensive test program was conducted for several years to develop the controlled leakage shaft seal for pressurized water reactor applications. Long-term tests were conducted on less than full-scale prototype seals as well as on full-size seals. Operating plants continue to demonstrate the satisfactory performance of the controlled leakage shaft seal pump design.

The support of the stationary member of the No. 1 seal (seal ring) is such as to allow large deflections, both axial and tilting, while still maintaining its controlled gap relative to the seal runner. Even if all the graphite were removed from the pump bearing, the shaft could not deflect far enough to cause opening of the controlled leakage gap. The "spring-rate" of the hydraulic forces associated with the maintenance of the gap is high enough to ensure that the ring follows the runner under very rapid shaft deflections.

Testing of pumps with the No. 1 seal entirely bypassed (full reactor pressure on the No. 2 seal) shows that relatively small leakage rates would be maintained for long periods of time. The plant operator is warned of this condition by the increase in No. 1 seal leakoff, and has time to close this line and to conduct a safe plant shutdown without significant leakage of reactor coolant to the containment. Thus, it may be concluded that gross leakage from the pump does not occur, even if seals were to suffer physical damage.

The effect of loss of offsite power on the pump itself is to cause an RCS pump trip, and temporary stoppage in the supply of injection water to the pump seals and CCW to the thermal barrier for seal and bearing cooling if a generator trip results. The emergency diesel generators are started automatically due to loss of offsite power, so that CCW flow is automatically restored to ensure cooling of the pump seals and bearings when the reactor coolant temperature is above 150°F. Seal water injection flow is subsequently restored by automatically restarting a charging pump on diesel generator electrical power.

The SDS is housed within the No. 1 seal area and is a passive device actuated by high temperature resulting from a loss of seal injection and CCW cooling to the thermal barrier heat exchanger. The SDS is designed to function only when exposed to an elevated fluid temperature downstream of the RCP No. 1 seal, resulting from a loss of seal injection and CCW flow to the thermal barrier heat exchanger. SDS deployment limits leakage from the RCS through the RCP seal package. Leakage is limited when the SDS thermal actuator retracts due to intrusion of hot reactor coolant water into the seal area, which causes the SDS seal ring to constrict around the No. 1 seal sleeve.

5.5.1.3.2 Coastdown Capability

It is important to reactor operation that the reactor coolant continues to flow for a short time after reactor trip. To provide this flow after a reactor trip, each RCP is provided with a flywheel. Thus, the rotating inertia of the pump, motor, and flywheel is employed during the coastdown period to continue the reactor coolant flow.
An inadvertent actuation of the SDS on a rotating assembly will not have any measurable impact on RCP coastdown or on the pump's capability to provide sufficient cooling flow to the reactor core.

The pump is designed for the design earthquake (DE), double-design earthquake (DDE), and Hosgri earthquake (HE) at the site. Bearing integrity is maintained as discussed below. It is, therefore, concluded that the coastdown capability of the pumps

is maintained even under the most adverse case of a pump trip coincident with the DE, DDE, or HE.

5.5.1.3.3 Flywheel Integrity

Integrity of the RCP flywheel is discussed in Sections 5.2.3.20 and 5.2.3.21.

5.5.1.3.4 Bearing Integrity

The design requirements for the RCP bearings are primarily aimed at ensuring a long life with negligible wear, so as to give accurate alignment and smooth operation over long periods of time. To this end, the surface-bearing stresses are held at a very low value, and, even under the most severe seismic transients, do not begin to approach loads which cannot be adequately carried for short periods of time.

Because there are no established criteria for short-term, stress-related failures in such bearings, it is not possible to make a meaningful quantification of such parameters as margins to failure, safety factors, etc. A qualitative analysis of the bearing design, embodying such considerations, gives assurance of the adequacy of the bearing to operate without failure.

High/low oil level in the motor bearings signals an alarm in the control room. Each motor bearing contains embedded temperature detectors, and so initiation of failure, separate from loss of oil, is indicated and alarmed in the control room as a high bearing temperature. Even if these indications are ignored and the bearing proceeds to fail, the low melting point of Babbitt metal on the pad surfaces ensures that no sudden seizure of the bearing occurs. In this event, the motor continues to drive since it has sufficient reserve capacity to operate until it can be shut down.

The RCP shaft is designed so that its critical speed is well above the operating speed.

5.5.1.3.5 Locked Rotor

The postulated case in which the pump impeller severely rubs on a stationary member and then seizes, was evaluated (refer to Section 15.4.4 for the evaluation of this event on the RCS as a whole). The analysis showed that under such conditions, assuming instantaneous seizure of the impeller, the pump shaft fails in torsion just below the coupling to the motor, disengaging the flywheel and motor from the shaft. This constitutes a loss of coolant flow in the loop. Following such a postulated seizure, the motor continues to run without any overspeed, and the flywheel maintains its integrity since it is still supported on a shaft with two bearings.

There are no credible sources of shaft seizure other than impeller rubs. Any seizure of the pump bearing is precluded by the graphite in the bearing. Any seizure in the seals results in a shearing of the anti-rotation pin in the seal ring. The motor has adequate power to continue pump operation even after the above occurrences. Indications of

pump malfunction in these conditions are first, by high-temperature signals from the bearing water temperature detector, and second, by excessive No. 1 seal leakoff indications. Along with these signals, pump vibration levels are checked. When there are indications of a serious malfunction, the pump is shut down for investigation.

5.5.1.3.6 Critical Speed

The RCPs are designed to operate below first critical speed. This results in a shaft design that, even under the most severe postulated transient, gives very low stress values.

Both the damped and lateral natural frequencies are determined by establishing a number of shaft sections and applying weights and moments of inertia for each section bearing spring and damping data. The torsional natural frequencies are similarly determined. The lateral and torsional natural frequencies are greater than 120 and 110 percent of the running speed, respectively.

5.5.1.3.7 Missile Generation

Each pump component is analyzed for missile generation. Any fragments of the motor rotor would be contained by the heavy stator. The same conclusion applies to the pump impeller because the small fragments that might be ejected would be contained by the heavy casing (refer to Sections 5.2.3.20 and 5.2.3.21).

5.5.1.3.8 Pump Cavitation

The minimum NPSH required by the RCP at running speed is approximately 170 feet (approximately 74 psi). For the controlled leakage seal to operate correctly, a differential pressure of approximately 200 psi across the seal is necessary. This results in a requirement for a minimum of 325 psi pressure in the primary loop before the RCP may be operated. This 325 psi requirement is for initial fill and vent only. In normal operation, a Δp greater than 200 psi at the Number 1 seal is required for RCP operation. This requirement is reflected in the operating instructions. At this pressure, the NPSH requirement is exceeded and no limitation on pump operation occurs from this source.

5.5.1.3.9 Pump Overspeed Considerations

The generator and the RCP remain electrically connected for 30 seconds following turbine trip actuated by either the RTS or the turbine protection systems, except for certain trips caused by electrical or mechanical faults which require immediate tripping of the generator. A complete load disconnect with turbine overspeed would result in an overspeed potential for the RCP. The turbine control system and the turbine intercept valves limit the overspeed to less than 120 percent, which is less than the design overspeed of the RCP. As additional backup, the main turbine has a mechanical overspeed protection trip usually set at about 110 percent.

The details of the turbine trip interface logic are shown in Figures 5.5-13 and 5.5-17. The sequence of events following a generator trip, which transfers the ESFs onto the standby power supply, is discussed in Section 8.3.

5.5.1.3.10 Anti-reverse Rotation Device

Each RCP is provided with an anti-reverse rotation device in the motor. This anti-reverse mechanism consists of five pawls mounted on the outside diameter of the flywheel, a serrated ratchet plate mounted on the motor frame, a spring return for the ratchet plate, and three shock absorbers.

After the motor comes to a stop, a minimum of one pawl engages the ratchet plate and, as the motor tends to rotate in the opposite direction, the ratchet plate also rotates until stopped by the shock absorbers. The rotor remains in this position until the motor is energized again. After the motor comes up to speed, the ratchet plate is returned to its original position by the spring return.

When the motor is started, the pawls initially drag over the ratchet plate. Once the motor reaches sufficient speed, centrifugal forces acting on the pawls produce enough friction to prevent the pawls from rotating, and thus hold the pawls in the elevated position until the motor is stopped.

5.5.1.3.11 Shaft Seal Leakage

During normal operation, leakage along the RCP shaft is controlled by three shaft seals arranged in series so that reactor coolant leakage to the containment is essentially zero. Charging flow is directed to each RCP via a 5-micron seal (maximum) water injection filter. It enters the pumps through the thermal barrier and is directed down to a point between the pump shaft bearing and the thermal barrier cooling coils. Here the flow splits and a portion flows down past the thermal barrier cooling cavity and labyrinth seals. The remainder flows up the pump shaft, cooling the lower bearing, and leaves the pump via the No. 1 seal bypass line or the No. 1 seal leakoff line. There is also a minor flow through the No. 2 seal.

Leakoff flow through the No. 1 seal from each pump is piped to a common manifold, and then, via a seal water return filter, through a seal water heat exchanger, to the VCT. The VCT provides a back pressure of at least 15 psig on the No. 1 seal.

A small amount of No. 1 seal leakoff passes through the No. 2 seal. No. 2 seal leakoff flows to the reactor coolant drain tank (RCDT).

The No. 3 seal is a double dam seal that divides seal flow into two paths. Part of the flow is directed radially outward to join the No. 2 seal leakoff line and the second part flows radially inward to the No. 3 seal leakoff line to the containment structure sump. A

standpipe is provided to ensure a back pressure of at least 7 feet of water on the No. 3 seal.

In the event of a loss of seal injection and CCW flow to the thermal barrier heat exchanger, reactor coolant begins to travel along the RCP shaft and displaces the cooler seal injection water. The SDS, designed to actuate only when exposed to an elevated fluid temperature downstream of the RCP No. 1 seal, deploys via retraction of a thermal actuator, which causes the SDS seal ring to constrict around the No. 1 seal sleeve. SDS deployment controls shaft seal leakage and limits the loss of reactor coolant via the RCP seal package to 1 gpm or less.

5.5.1.3.12 Spacer Couplers

The installation of a removable spool piece, shown in Figure 5.5-3, in the RCP shaft facilitates the inspection and maintenance of the pump seal system without breaking any of the fluid, electrical, or instrumentation connections to the motor, without removal of the motor.

5.5.1.4 Tests and Inspections

Support feet are cast integral with the casing to eliminate a weld region. The design enables disassembly and removal of the pump internals for normal access to the internal surface of the pump casing.

The RCP quality assurance program is given in Table 5.5-2. Refer to Sections 5.1.8.19, 5.1.8.20, 5.2.3.14, and 5.2.3.15 for further discussion of testing and inspection of the RCS.

HISTORICAL INFORMATION IN ITALICS BELOW NOT REQUIRED TO BE REVISED

5.5.1.4.1 Electroslag Welding

RCP casings fabricated by electroslag welding were qualified as follows:

(1) The electroslag welding procedure employing 2- and 3-wire technique was qualified in accordance with the requirements of the ASME BPVC, Section IX, and Code Case 1355 (refer to Table 5.2-1) plus supplementary evaluations specified by Westinghouse.

(2) A separate weld test was made using the 2-wire electroslag technique to evaluate the effects of a stop and restart of welding by this process. This evaluation was performed to establish proper procedures and techniques as such an occurrence was anticipated during production applications due to equipment malfunction, power outages, etc.

(3) All of the weld test blocks in (1) and (2) above were radiographed using a 24 MeV betatron. The radiographic quality level obtained was between 0.5 and 1 percent, as defined by ASTM E-94. There were no discontinuities evident in any of the electroslag welds.

The casting segments were surface conditioned for 100 percent radiographic and penetrant inspections. The radiographic acceptance standards were ASTM E-186 Severity Level 2 except no Category D or E defectives were permitted for section thicknesses up to 4-1/2 inches and ASTM E-280, Severity Level 2, for section thicknesses greater than 4-1/2 inches. The edges of the electroslag weld preparations were machined. These surfaces were also penetrant inspected prior to welding. The penetrant acceptance standards were those of the ASME BPVC, Section III, Paragraph N-627.

The completed electroslag weld surfaces were ground flush with the casting surface. The electroslag weld and adjacent base material were then 100 percent radiographed in accordance with ASME BPVC Case 1355. Also, the electroslag weld surfaces and adjacent base material were penetrant inspected in accordance with ASME BPVC, Section III, Paragraph N-627. Weld metal and base metal chemical and physical properties were determined and certified. Heat treatment furnace charts were recorded and certified, and are available at the NSSS vendor's facilities.

5.5.1.4.2 In-process Control of Variables

Many variables must be controlled to maintain desired quality welds. These variables and their relative importance are as follows:

(1) Heat Input vs. Output

The heat input is determined by the product of volts and current and measured by voltmeters and ammeters, which are considered accurate and are calibrated every 30 days. During any specific weld these meters are constantly monitored by the operators.

(2) Weld Gap Configuration

The weld gap configuration is controlled by 1-1/4-inch spacer blocks. As these blocks are removed, there is the possibility of gap variation. It has been found that a variation from 1 to 1-3/4 inches is not detrimental to weld quality as long as the current is adjusted accordingly.

(3) Flux Chemistry

The flux used for welding is Arcos BV-I Vertomax. This is a neutral flux, the chemistry of which is specified by Arcos Corporation. The molten slag is kept at a nominal depth of 1-3/4 inches and may vary in depth by plus or

minus 3/8 inch without affecting the weld. This is measured with a stainless steel dipstick.

(4) Weld Cross-Section Configuration

The higher the current or heat input and the lower the heat output, the greater the dilution of weld metal with base metal. This causes a rounder barrel-shaped configuration compared to welding with lower heat input and higher heat output, which reduces the amount of dilution and provides a more narrow barrel-shaped configuration. Configuration is also a function of section thickness; the thinner the section, the rounder the pattern produced.

5.5.1.4.3 Welder Qualification

Welder qualification is in accordance with ASME BPVC, Section IX rules.

5.5.2 STEAM GENERATORS

Each RCS loop contains a vertical U-tube SG. The SGs provide high quality steam to the turbine. The tube and tubesheet boundary are designed to prevent the transfer of radioactivity generated within the core to the secondary system.

5.5.2.1 Design Bases

SG design data are provided in Table 5.5-3. The design can sustain the transient conditions identified in Table 5.2-4. Estimates of radioactivity levels anticipated in the secondary side of the SGs during normal operation and their bases for the estimates are discussed in Section 11.1. The transient analysis of a SGTR is discussed in Section 15.4.

When operating at 100 percent power, integral moisture separating equipment reduces moisture content of the steam at the exit of the SGs to ≤0.05 percent. Under the following transient conditions, the moisture content at the exit of the SGs is <0.25 percent:

- loading or unloading at a rate of 5 percent of full power steam flow per minute in the range from 15 to 100 percent of full load steam flow
- a step load change of 10 percent of full power in the range from 15 to 100 percent of full load steam flow

The SG tubesheet complex meets the stress limitations and fatigue criteria specified in ASME BPVC Section III-1998 through 2000 Addenda. Per Section 5.2.2.1.5.3, emergency conditions do not apply. Codes and materials requirements of the SG are

listed in Tables 5.2-2 and 5.2-14, respectively. The SG design maximizes integrity against hydrodynamic excitation and vibration failure of the tubes for plant life.

The water chemistry in the reactor side is selected to provide the necessary boron content for reactivity control and to minimize corrosion of RCS surfaces. Water chemistry for the primary coolant side is presented in Table 5.2-15.

5.5.2.1.1 Design Basis for the Steam Outlet Nozzle Flow Restrictor

The design criterion for the steam nozzle flow restrictors is to limit steam flow in the event of an MSLB during normal operating conditions, in order to reduce pressure drop loadings on the SG internal components, as well as to limit the mass and energy release rate into the containment.

5.5.2.2 Design Description

The SG, shown in Figure 5.5-4, is a vertical shell and U-tube design with evaporators having integral moisture separating equipment. The reactor coolant flows through the inverted U-tubes, entering and leaving through the nozzles located in the hemispherical bottom head of the SG. Steam is generated on the shell side and flows upward through the moisture separators to the outlet nozzle at the top of the vessel. The head is divided into inlet and outlet chambers by a vertical partition plate extending from the head to the tubesheet. Manways are provided for access to both sides of the divided head.

The SG unit is primarily carbon steel. The heat transfer tubes and the divider plate are Inconel and the interior surfaces of the reactor coolant channel heads and nozzles are clad with austenitic stainless steel. The primary side of the tubesheet is weld clad with Inconel.

Feedwater is introduced into the SGs through a feedwater nozzle located in the upper shell. The nozzle does not require a flow-limiting device because the feedring itself provides this function. The nozzle contains a welded thermal liner that minimizes the impact of rapid feedwater temperature transients on the nozzle. The feedwater distribution ring is welded to the feedwater nozzle to minimize the potential for draining the ring. The feedring is located above the elevation of the feed nozzle to minimize the time required to fill the feed nozzle during a cold water addition transient. The feedwater is discharged through spray nozzles installed on the top of the ring. These features reduce the thermal fatigue loading on the feedwater nozzle, eliminate steady-state thermal stratification in the feedwater nozzle and feedwater piping elbow at the feedwater nozzle entrance, and minimize the potential for bubble- collapse water hammer in the feedwater distribution ring. The feedwater piping elbow at the feedwater nozzle entrance also contains an elbow thermal liner that minimizes the effects of thermal stratification on the elbow-to-nozzle weld and the weld of the feedwater inlet thermal sleeve to feedwater nozzle.

The SG feedring is fabricated from alloy steel with a significant chromium content to provide enhanced erosion/corrosion resistance characteristics. The feedring has spray nozzles that are spaced around the feedring circumference to distribute the feedwater into the upper shell recirculating water pool. The spray nozzle perforations also act to prevent loose parts ingress from the feedwater system.

Subsequently, the water-steam mixture flows upward through the tube bundle and into the steam drum section. A set of centrifugal moisture separators, located above the tube bundle, removes most of the entrained water from the steam. The moisture separators recirculate flow that mixes with feedwater as it enters the downcomer formed by the shell and tube bundle wrapper. Steam dryers are employed to increase the steam quality to a minimum of 99.95 percent, which corresponds to a steam outlet moisture content of 0.05 percent. The dryers can be inspected, or disassembled and removed, through one of two bolted and gasketed secondary manway access openings.

5.5.2.2.1 Design Description of the Steam Outlet Nozzle Flow Restrictor

An integral flow restrictor is provided in each steam nozzle to limit flow in the event of an MSLB accident downstream of the steam nozzle. The flow restrictor consists of seven holes in the steam outlet nozzle forging, with Venturi type flow limiting inserts installed in each of these holes. The total minimum flow area is 1.4 ft^2 for the seven inserts. The Alloy 690 flow limiting inserts are welded to the Alloy 690 cladding at the steam nozzle bottom. Materials and inspection requirements applied in fabrication of the steam nozzle flow restrictor assemblies conform to ASME BPVC Section III-1998 through 2000 Addenda requirements.

The steam outlet nozzle flow restrictor assembly is shown in Figure 5.5-18.

5.5.2.3 Design Evaluation

5.5.2.3.1 Forced Convection

The limiting case for heat transfer capability is the nominal 100 percent design thermal duty. To ensure that this thermal duty will be met, the SGs are designed to operate with an effective fouling factor, or heat transfer resistance, that is greater than that experienced for comparable units in service. Adequate tubing area is selected to ensure that the full design heat removal rate is achieved for these conditions.

The historical best estimate fouling factor applied to Alloy 690-TT tubing is 0.00006 hr-ft^2-°F/Btu. The design fouling factor for the Diablo Canyon SGs is 0.00018 hr-ft^2-°F/Btu. When added to the conduction resistance of the tubing, this additional resistance accounts for approximately 17 percent margin for heat transfer, i.e., a 17 percent higher heat transfer coefficient is expected compared to the design value. This margin ensures that the SGs will provide sufficient heat transfer capability through the design life.

5.5.2.3.2 Natural Circulation Flow

The driving head created by the change in coolant density as it is heated in the core and rises to the outlet nozzle initiates convection circulation. This circulation is enhanced by the fact that the SGs, which provide a heat sink, are at a higher elevation than the reactor core, which is the heat source. Thus, natural circulation is ensured for the removal of decay heat during hot shutdown in the unlikely event of loss of forced circulation. This was confirmed by DCPP Unit 1 testing.

5.5.2.3.3 Secondary System Fluid Flow Instability Prevention

Undesirable perturbations in secondary side flow are postulated to result from events such as water hammer and circulation loop instability. Such events can compromise the functional capability and mechanical integrity of the secondary system. The SGs include design features intended to preclude these occurrences.

The potential for water hammer is mitigated by the inclusion of an upward-sloping section of the feedwater ring header. This reduces the volume within the feedwater ring assembly that could potentially be filled with steam, and also reduces the possibility of thermal stratification in the feed flow. The SGs include top-discharge spray nozzles, which further reduce the possibility of steam pockets being trapped in the feedwater ring, and also serve as a means to prevent loose parts from entering the SG through the feedwater system.

Instability in the circulation loop for the secondary fluid can result from a distribution of pressure drops that favors two-phase flow, which is de-stabilizing and is found in the upper tube bundle and moisture separators, as opposed to single-phase flow, which is stabilizing and is found in the downcomer and lower tube bundle areas. A stability damping factor is determined in which a negative value indicates damped, stable circulation flow. The SGs are designed to provide damped, stable circulation over the full range of operating conditions, with sufficient margin to prevent increased two-phase pressure drop, caused by conditions such as a partially blocked, broached tube support plate flow area, from causing instability.

5.5.2.3.4 Tube and Tubesheet Stress Analyses

Tube and tubesheet stress analyses for the SGs confirm that the SG tubesheet will withstand the loading (quasi-static rather than shock loading) caused by LOCA. With the acceptance of the DCPP LBB analysis by the NRC (Reference 10), dynamic loading conditions resulting from pipe rupture events in the main RCL piping no longer have to be considered in the design basis analyses; only the much smaller dynamic loads resulting from RCS branch line breaks have to be considered (refer to Section 3.6.2.1.1.1).

5.5.2.3.5 Corrosion

All volatile chemistry is used in the main steam, feedwater, and condensate systems to provide improved corrosion protection and control.

The control measures exercised over the secondary water chemistry for the purpose of inhibiting SG tube degradation consist of a program encompassing: (a) scheduled sampling and analyses of fluid systems for the critical control parameters, (b) recording, reviewing, and management of data, (c) identification of process sampling points, (d) guidance for corrective actions for off-point chemistry, (e) identification of the authority responsible for the interpretation of data, and (f) the sequence and timing of administrative events required to initiate corrective action.

Additional control measures for secondary water chemistry come from the turbine manufacturer. The program includes the monitoring of main steam purity. The SGs include a number of key design features that enhance operation, performance, and maintenance. The design features and materials have been developed and selected to minimize the potential for tube degradation. The design features enhance steam and water flow by the tubes, which minimizes the potential for concentration of chemical species that can be detrimental to tubing material.

The U-tubes are fabricated of nickel-chromium-iron (Ni-Cr-Fe) Alloy 690. The tubes undergo thermal treatment following tube-forming and annealing operations. The thermal treatment subjects the tubes to elevated temperatures for a prescribed period of time to improve the microstructure of the material. Thermally treated Alloy 690 has been shown in laboratory tests and operating nuclear power plants to be very resistant to primary water stress corrosion cracking and outside diameter initiated stress corrosion cracking.

5.5.2.3.6 Design Evaluation for the Steam Outlet Nozzle Flow Restrictor

In the event of an MSLB, steam flow rate from the SGs is restricted by the outlet nozzle Venturi inserts, which limit the steam blowdown rate from the SGs.

5.5.2.3.7 Flow-induced Vibration

In the design of the SGs, the possibility of degradation of tubes due to either mechanical- or flow-induced excitation is thoroughly evaluated. This evaluation includes detailed analysis of the tube support systems as well as an extensive research program with tube vibration model tests.

In evaluating degradation due to vibration, consideration is given to sources of excitation such as those generated by primary fluid flowing within the tubes, mechanically induced vibration, and secondary fluid flow on the outside of the tubes. During normal operation, the effects of primary fluid flow within the tubes and

mechanically induced vibration are considered to be negligible and should cause little concern. Thus, the primary source of tube vibrations is the hydrodynamic excitation by the secondary fluid on the outside of the tubes. In general, three vibration mechanisms have been identified:

(1) Vortex shedding

(2) Fluidelastic excitation

(3) Turbulence

Vortex shedding does not provide detectable tube bundle vibration for the following reasons:

(1) Flow turbulence in the downcomer and tube bundle inlet region inhibits the formation of Von Karman's vortex train.

(2) The spatial variations of cross flow velocities along the tube preclude vortex shedding at a single frequency.

(3) Both axial and cross flow velocity components exist on the tubes. The axial flow component disrupts the Von Karman vortices.

The SG design is qualified by analyses (relying on theoretical calculations based on laboratory test data and operating SG experience), which demonstrate that no tubes will experience unacceptable degradation or wear due to vibration over the SG design life.

5.5.2.4 Tests and Inspections

The SG quality assurance program is given in Table 5.5-5. Radiographic inspection and acceptance standards are in accordance with the requirements of ASME BPVC Section III-1998 through 2000 Addenda.

Liquid penetrant inspection was performed on weld deposited tubesheet cladding, channel head cladding, tube-to-tubesheet weldments, and weld deposit cladding. Liquid penetrant inspection and acceptance standards are in accordance with the requirements of ASME BPVC Section III-1998 through 2000 Addenda.

Magnetic particle inspection was performed on all pressure boundary forgings (tubesheet, shell barrels, channel head, transition cone, elliptical head, and secondary-side nozzles), and the following weldments:

- Nozzle to shell
- Upper lateral support lugs
- Instrument connections
- Temporary attachments after removal

- All accessible pressure-retaining welds after hydrostatic testing.

Magnetic particle inspection and acceptance standards were in accordance with the requirements of ASME BPVC Section III-1998 through 2000 Addenda.

Ultrasonic examination was performed on all pressure boundary forgings (tubesheet, shell barrels, channel head, transition cone, elliptical head, primary nozzle safe ends, and secondary-side nozzles).

Manways provide access to both the primary and secondary sides of the SGs. Primary side inspection and maintenance is described in Section 5.5.2.5 and is typically performed with nozzle dams in place to isolate the SG bowl from the RCS.

5.5.2.4.1 Tests and Inspections for the Steam Outlet Nozzle Flow Restrictor

The flow restrictor Venturi inserts at the steam outlet are located inside the steam outlet nozzle and welded to the cladding. Therefore, the flow restrictor inserts are not a pressure boundary component. However, component integrity is ensured by compliance with ASME BPVC Section III-1998 through 2000 Addenda requirements.

5.5.2.5 Steam Generator Tube Surveillance Program

5.5.2.5.1 Inservice Inspection

SG tube inspection is performed in accordance with the Technical Specifications (Reference 6) and the DCPP surveillance test procedure. Eddy current non-destructive testing is used to perform tube inspections. The SG tube surveillance program ensures that the structural and leakage integrity of this portion of the RCS will be maintained. The program for ISI of SG tubes is based on NEI 97-06 (Reference 5). ISI of SG tubing is essential in order to maintain surveillance of the conditions of the tubes in the event there is evidence of mechanical damage or progressive degradation due to design, manufacturing errors, or inservice conditions that lead to corrosion. ISI of SG tubing also provides a means of characterizing the nature and cause of any tube degradation so that corrective measures can be taken.

Tube degradation will be detected during scheduled inservice SG tube examinations. SG tube inspections of operating plants have demonstrated the capability to reliably detect degradation that has penetrated 20 percent of the original tube wall thickness. Plugging is required for all tubes with imperfections exceeding the plugging limit defined in the Technical Specifications. Degraded tubes may be left in service if non-destructive examination sizing techniques verify that the imperfection is less than the plugging limit (References 5 and 6).

5.5.2.5.2 Primary-to-Secondary Leakage

The plant is expected to be operated in a manner such that the secondary coolant will be maintained within those chemistry limits found to result in negligible corrosion of the SG tubes. DCPP Technical Specifications limit primary to secondary leakage through an SG to 150 gallons per day. This limit is based on the assumption that a single crack leaking this amount would not propagate to a SGTR under the stress conditions of a LOCA or an MSLB. DCPP has demonstrated that primary-to-secondary leakage of 150 gallons per day per SG can readily be detected during power operation. Leakage in excess of this limit will require plant shutdown and an unscheduled inspection, during which the leaking tubes will be located and plugged.

The dose consequence analyses in Section 15.5 address accident-induced leakage up to 0.75 gpm (total for all 4 SGs) at standard temperature and pressure.

5.5.3 REACTOR COOLANT PIPING

Reactor coolant piping provides a flowpath connecting the major components of each RCS loop. The RCS piping constitutes a boundary to contain the coolant under operating temperature and pressure conditions and limit leakage (and radioactivity release) to the containment atmosphere. It contains pressurized water that is circulated at a flowrate and temperature consistent with reactor core thermal and hydraulic performance requirements.

5.5.3.1 Design Bases

The RCS piping was designed and fabricated to accommodate the stresses due to the pressures and temperatures attained under all expected modes of plant operation or system interactions. Code and material requirements are provided in Table 5.2-2 and Section 5.2.2.3.

Materials of construction are specified to minimize corrosion/erosion and ensure compatibility with the operating environment.

Refer to Section 5.2.2.1.3 for the codes and standards applicable to the RCL and pressurizer surge line piping for both Unit 1 and Unit 2.

5.5.3.2 Design Description

Principal design data for the RCS piping for both Unit 1 and Unit 2 are provided in Table 5.5-6. The RCS piping was specified in the smallest sizes consistent with system requirements. In general, high fluid velocities are used to reduce piping sizes. This design philosophy results in the reactor inlet and outlet piping diameters listed in Table 5.5-6. The line between the SG and the pump suction is larger to reduce pressure drop and improve flow conditions to the pump suction. To further improve pump suction conditions, a flow splitter is provided in the pipe bend upstream of the pump suction.

The reactor coolant piping is seamless forged, and fittings are cast. Cast sections of large 90° elbows are joined by electroslag welds. All materials are austenitic stainless steel. All smaller piping that is part of the RCPB, such as the pressurizer surge line, spray and relief line, loop drains, and connecting lines to other systems are also austenitic stainless steel. The nitrogen supply line for the PRT is carbon steel. All joints and connections are welded, except for the PORVs and PSVs, where flanged joints are used. Thermal sleeves are installed at points in the system where high thermal stresses could develop due to rapid changes in fluid temperature during normal operational transients. These points include:

(1) Charging connections at the primary loop from the CVCS

(2) Both ends of the pressurizer surge line

(3) Pressurizer spray line connection at the pressurizer

Thermal sleeves were not provided for the remaining injection connections of the ECCS since these connections are not in normal use.

All piping connections from auxiliary systems were made above the horizontal centerline of the reactor coolant piping, with the exception of:

(1) RHR pump suction, which is 45° down from the horizontal centerline. This enables the water level in the RCS to be lowered in the reactor coolant pipe while continuing to operate the RHR system, should this be required for maintenance.

(2) Loop drain lines and the connection for temporary level measurement of water in the RCS during refueling and maintenance operation.

(3) The differential pressure taps for flow measurement are downstream of the SGs on the first 90° elbow. There are three flow transmitters at each elbow. The transmitters at each elbow are arranged so that they use a common high-pressure tap (on the outside of the elbow) and separate low pressure taps (on the inside of the elbow). Additional discussion is included in Section 7.2.2.1.4.

Penetrations into the coolant flowpath were limited to the following:

(1) The spray line inlet connections extend into the cold leg piping in the form of a scoop so that the velocity head of the RCL flow adds to the spray driving force.

(2) The reactor coolant sample system taps protrude into the main stream to obtain a representative sample of the reactor coolant.

(3) The narrow range RCS temperature sensors (RTDs) are mounted in thermowells that extend into the hot and cold legs. The RTD bypass scoops and nozzles have been capped.

(4) The wide range RCS temperature sensors (RTDs) are mounted in thermowells that protrude into the hot legs and cold legs.

Signals from these instruments are used to compute the reactor coolant ΔT (temperature of the hot leg, T_{hot}, minus the temperature of the cold leg, T_{cold}) and an average reactor coolant temperature (T_{avg}). The T_{avg} and ΔT for each loop are indicated on the main control board. Chapter 7 further describes the temperature sensor arrangement.

The RCPB piping includes those sections of piping interconnecting the RPV, SG, and RCP. It also includes the following:

(1) Charging line and alternate charging line from the isolation valve up to the branch connections on the RCL

(2) Letdown line and excess letdown line from the branch connections on the RCL to the isolation valve

(3) Pressurizer spray lines from the reactor coolant cold legs to the spray nozzle on the pressurizer vessel

(4) RHR lines to or from the RCLs up to the designated isolation or check valve

(5) SI lines from the designated isolation or check valve to the RCLs

(6) Accumulator lines from the designated isolation or check valve to the RCLs

(7) Loop fill, loop drain, sample, and instrument lines to or from the designated isolation valve to or from the RCLs

(8) Pressurizer surge line from one RCL hot leg to the pressurizer vessel inlet nozzle

(9) Abandoned RTD scoop element, pressurizer spray scoop, sample connection with scoop, reactor coolant temperature element installation boss, and the temperature element thermowell itself

(10) All branch connection nozzles attached to RCLs

(11) Pressure relief lines from nozzles on top of the pressurizer vessel up to and through the PORVs and PSVs

(12) Seal injection water and labyrinth differential pressure lines to or from the RCP inside reactor containment

(13) Auxiliary spray line from the isolation valve to the pressurizer spray line header

(14) Sample lines from pressurizer to the isolation valve

(15) Pressurizer loop seal drain lines to the pressurizer.

Details of the materials of construction and codes used in the fabrication of reactor coolant piping and fittings are discussed in Section 5.2.

5.5.3.3 Design Evaluation

5.5.3.3.1 Piping Load and Stress Evaluation

Piping loads and stress evaluation methodology for normal, upset, and faulted conditions are described in Section 5.2.2.1.

5.5.3.3.2 Material Corrosion/Erosion Evaluation

The water chemistry is selected to minimize corrosion. A periodic analysis of the coolant chemical composition is performed to verify that the reactor coolant quality meets the specifications. The RCS water chemistry is presented in Section 5.2.2.3.4 and Table 5.2-15.

An upper limit of about 50 feet per second is specified for internal coolant velocity to avoid the possibility of accelerated erosion. All pressure-containing welds within the RCPB are available for examination and have removable insulation.

5.5.3.4 Tests and Inspections

5.5.3.4.1 Inservice Testing and Inspection

Refer to Sections 5.1.8.19, 5.1.8.20, 5.2.3.14, and 5.2.3.15 for further discussion of testing and inspection of the RCS.

5.5.3.4.2 Piping Quality Assurance

The RCS piping quality assurance program is given in Table 5.5-7.

5.5.3.4.3 Electroslag Weld Quality Assurance

The 90° elbows used in the RCL piping were electroslag welded. A description of this procedure is contained in Section 5.5.1.

The following quality assurance actions for RCS piping were undertaken:

(1) The electroslag welding procedure employing 1-wire technique was qualified in accordance with the requirements of ASME BPVC Section IX, and Code Case 1355 plus supplementary evaluation.

(2) The casting segments were surface conditioned for 100 percent radiographic and penetrant inspections. The acceptance standards were USAS Code Case N-10, and ASTM E-186, Severity Level 2, except no Category D or E defectives were permitted.

5.5.4 MAIN STEAM LINE FLOW RESTRICTORS

As described in Section 5.5.2.2.1, each SG has a flow restrictor located in the steam outlet nozzle to limit the steam blowdown from the SGs in the event of an MSLB. The flow restrictor consists of seven 6.03-inch ID venturi nozzles. In addition, a 16-inch flow restrictor is installed in each main steam line outlet to measure steam flow.

The main steam line flow restrictors are welded into the inside of a length of main steam pipe. Therefore, the 16-inch flow restrictors are not a pressure boundary component. However, component integrity is ensured by compliance with ASME Code requirements.

5.5.5 MAIN STEAM LINE ISOLATION SYSTEM

Each main steam line has one isolation valve and one check valve, both of the swing check type, located outside the containment. The isolation valves are held open by a pneumatic actuator until a trip signal is received, as discussed in Section 6.2.4. For analysis of the ability of these valves to close under pipe break conditions (refer to Section 10.3.2.1).

5.5.6 RESIDUAL HEAT REMOVAL SYSTEM

The RHR system is a dual function system that is aligned to immediately serve as the low-head portion of the ECCS in Modes 1 through 3 and is also aligned to provide normal plant cooldown function in Modes 4 through 6. This section discusses the design, functions, and requirements of the RHR system while performing the plant cooldown function.

The RHR system functions in conjunction with the high-head and intermediate-head portions of the ECCS to provide injection of borated water from the refueling water

storage tank (RWST) into the RCS cold legs during the injection phase following a LOCA. During normal operation, the RHR system is lined up to perform this emergency function.

In its capacity as the low-head portion of the ECCS, the RHR system provides long-term recirculation capability for core cooling following the injection phase of the LOCA. This function is accomplished by aligning the RHR system to take suction from the containment recirculation sump.

For a more complete discussion of the use of the RHR system as part of the ECCS, refer to Section 6.3.

The RHR system transfers heat from the RCS to the CCW system to reduce reactor coolant temperature to the cold shutdown temperature at a controlled rate during the latter part of normal plant cooldown, and maintains this temperature until the plant is started up again.

The RHR system can also be used to transfer refueling water between the RWST and the refueling cavity before and after the refueling operations.

During the recirculation phase of a LOCA, if both RHR pumps are in operation, one RHR pump may be used to provide flow from the containment recirculation sump to two containment spray rings for continued post-accident spray operation (refer to Section 6.2.2.2).

5.5.6.1 Design Bases

5.5.6.1.1 General Design Criterion 2, 1967 - Performance Standards

The RHR system is designed to withstand the effects of, or be protected against, natural phenomena, such as earthquakes, tornadoes, flooding, winds, tsunamis, and other local site effects.

5.5.6.1.2 General Design Criterion 3, 1971 - Fire Protection

The RHR system is designed and located to minimize, consistent with other safety requirements, the probability and effects of fires and explosions.

5.5.6.1.3 General Design Criterion 9, 1967 – Reactor Coolant Pressure Boundary

The portion of the RHR system that is part of the RCPB is designed and constructed so as to have an exceedingly low probability of gross rupture or significant leakage throughout its lifetime.

5.5.6.1.4 General Design Criterion 11, 1967 - Control Room

The RHR system is designed to or contains instrumentation and controls that support actions to maintain the safe operational status of the plant from the control room or from an alternate location if control room access is lost due to fire or other causes.

5.5.6.1.5 General Design Criterion 12, 1967 - Instrumentation and Control Systems

Instrumentation and controls are provided, as required, to monitor and maintain RHR system variables within prescribed operating ranges.

5.5.6.1.6 General Design Criterion 40, 1967 – Missile Protection

The ESF (containment isolation) portion of the RHR system is designed to be protected against dynamic effects and missiles that might result from plant equipment failures.

5.5.6.1.7 General Design Criterion 49, 1967 - Containment Design Basis

The RHR system supply line from RCS hot leg loop 4 is designed so that the containment structure can accommodate, without exceeding the design leakage rate, pressures and temperatures resulting from the largest credible energy release following a LOCA, including a considerable margin for effects from metal-water or other chemical reactions that could occur as a consequence of failure of ECCSs.

5.5.6.1.8 General Design Criterion 54, 1971 - Piping Systems Penetrating Containment

The RHR system supply line from RCS hot leg loop 4 piping that penetrates containment is provided with leak detection, isolation, redundancy, reliability, and performance capabilities which reflect the importance to safety of isolating this system. The piping is designed with a capability to test periodically the operability of the isolation valves and associated apparatus and to determine if valve leakage is within acceptable limits.

5.5.6.1.9 General Design Criterion 55, 1971 - Reactor Coolant Pressure Boundary Penetrating Containment

Each RHR system line that penetrates containment is provided with CIVs.

5.5.6.1.10 Residual Heat Removal System Safety Function Requirements

(1) Overpressurization Protection

Overpressure protection is provided for the RHR system when it is in operation (not isolated from the RCS), to prevent accidental overpressurization.

(2) Protection from Missiles

The non-ESF PG&E Design Class I portion of the RHR system is designed to be protected against the effects of missiles which may result from plant equipment failure and from events and conditions outside the plant.

(3) Shared Function

The normal plant cooldown function of the RHR system does not compromise its ESF safety function.

(4) Protection Against High Energy Pipe Rupture Effects

The non-ESF PG&E Design Class I portion of the RHR system is designed and located to accommodate the dynamic effects of a postulated high-energy pipe failure to the extent necessary to assure that a safe shutdown condition of the reactor can be accomplished and maintained.

(5) Protection from Moderate Energy Pipe Rupture Effects – Outside Containment

The PG&E Design Class I portion of the RHR system located outside containment is designed to be protected against the effects of moderate energy pipe failure.

(6) Protection from Jet Impingement – Inside Containment

The PG&E Design Class I portion of the RHR system located inside containment is designed to be protected against the effects of jet impingement which may result from high energy pipe rupture.

(7) Protection from Flooding Effects – Outside Containment

The PG&E Design Class I portion of the RHR system located outside containment is designed to be protected from the effects of internal flooding.

5.5.6.1.11 10 CFR 50.49 - Environmental Qualification of Electrical Equipment Important to Safety for Nuclear Power Plants

RHR system components that require EQ are qualified to the requirements of 10 CFR 50.49.

5.5.6.1.12 10 CFR 50.55a(f) - Inservice Testing Requirements

RHR system ASME Code components are tested to the requirements of 10 CFR 50.55a(f)(4) and 10 CFR 50.55a(f)(5) to the extent practical.

5.5.6.1.13 10 CFR 50.55a(g) - Inservice Inspection Requirements

RHR system ASME Code components are inspected to the requirements of 10 CFR 50.55a(g)(4) and 10 CFR 50.55a(g)(5) to the extent practical.

5.5.6.1.14 10 CFR 50.48(c) – National Fire Protection Association Standard NFPA 805

The RHR system is designed to meet the nuclear safety and radioactive release performance criteria of Section 1.5 of NFPA 805, 2001 Edition.

5.5.6.1.15 Generic Letter 87-12, July 1987 - Loss of Residual Heat Removal While the Reactor Coolant System is Partially Filled

RHR system operation when the RCS water level is below the top of the RPV was evaluated to identify and enhance configurational, operational, procedural, and training requirements to ensure that the RHR system continues to meet the licensing basis of the plant, and that no unanalyzed event, or threat to safety, exists in this condition.

5.5.6.1.16 Generic Letter 88-17, October 1988 - Loss of Decay Heat Removal 10 CFR 50.54(f)

DCPP implements the expeditious action and programmed enhancement recommendations of Generic Letter 88-17, October 1988, with respect to operation following placement of the NSSS on RHR system cooling, or following the attainment of NSSS conditions under which RHR system operation would be normally initiated, to ensure loss of decay heat removal does not occur.

5.5.6.1.17 Generic Letter 89-10, June 1989 – Safety-Related Motor-Operated Valve Testing and Surveillance

The RHR system MOVs meet the requirements of Generic Letter 89-10, June 1989, and associated Generic Letter 96-05, September 1996.

5.5.6.1.18 Generic Letter 95-07, August 1995 - Pressure Locking and Thermal Binding of Safety-Related Power-Operated Gate Valves

The RHR system PG&E Design Class I, power-operated gate valves meet the requirements of Generic Letter 95-07, August 1995.

5.5.6.1.19 Generic Letter 98-02, May 1998 - Loss of Reactor Coolant Inventory and Associated Potential for Loss of Emergency Mitigation Functions While in a Shutdown Condition

The RHR system is administratively controlled, configurationally managed, and procedurally operated to preclude an inadvertent draindown event as described in Generic Letter 98-02, May 1998.

5.5.6.1.20 NRC Bulletin 88-04, May 1988 - Potential Safety-Related Pump Loss

The RHR system is designed such that the PG&E Design Class I pumps that share a common minimum flow recirculation line are not susceptible to the pump-to-pump interaction or dead-heading as described in NRC Bulletin 88-04, May 1988. In addition, the installed minimum flow capacity for RHR system PG&E Design Class I pumps is adequate for even a single pump in operation.

5.5.6.1.21 Branch Technical Position RSB 5-1, 1980 – Design Requirements of the Residual Heat Removal System

The DCPP reactor design is such that it can be taken from normal operating conditions to cold shutdown using only systems qualified for the Hosgri earthquake (refer to Section 3.7.6), with either only onsite or only offsite power, and with the most limiting single failure.

5.5.6.2 System Description

The RHR system is designed to remove heat from the core and reduce the temperature of the RCS during the second phase of plant cooldown. During the first phase of cooldown, the temperature of the RCS is reduced by transferring heat from the RCS to the SPCS via the SGs.

The RHR system is placed in operation when the nominal temperature and pressure of the RCS are ≤ 350°F and ≤ 390 psig, respectively. The cooldown calculation of Reference 12 assumes the RHR is placed in service no sooner than 4 hours after reactor shutdown. Assuming that two RHR heat exchangers and two RHR pumps are in service and that each heat exchanger is supplied with CCW at design flow and temperature, the analysis shows that the RHR system design is capable of reducing the temperature of the reactor coolant to 140°F in less than 20 hours after reactor shutdown. The heat load handled by the RHR system during the cooldown transient includes sensible and decay heat from the core and RCP heat.

RHR system design parameters are listed in Table 5.5-8. A schematic diagram of the RHR system is shown in Figure 3.2-10.

The RHR system consists of two RHR heat exchangers, two RHR pumps, and the associated piping, valves, and instrumentation necessary for operational control. The inlet line to the RHR system is connected to the hot leg of RCL 4, while the return lines are connected to the cold legs of each of the RCLs. These normal return lines are also the ECCS low-head injection lines (refer to Figure 6.3-4).

The RHR system suction line is isolated from the RCS by two MOVs in series while the discharge lines are isolated by two check valves in each line. These check valves are not a part of the RHR system; they are shown as part of the ECCS. The isolation valves inlet line pressure-relief valve and associated piping are located inside the containment. The remainder of the system is located outside the containment.

During system operation, reactor coolant flows from the RCS to the RHR pumps, through the tube side of the RHR heat exchangers, and back to the RCS. The heat is transferred in the RHR heat exchangers to the CCW circulating through the shell side of the heat exchangers.

Coincident with RHR operations, a portion of the reactor coolant flow may be diverted from downstream of the RHR heat exchangers to the CVCS low-pressure letdown line for cleanup and/or pressure control. By regulating the diverted flowrate and the charging flow, the RCS pressure can be controlled. Pressure regulation is necessary to maintain the pressure range dictated by the fracture prevention criteria requirements of the RPV and by the No. 1 seal differential pressure and NPSH requirements of the RCPs.

The RCS cooldown rate is manually controlled by regulating the reactor coolant flow through the tube side of the RHR heat exchangers. A line containing a flow control valve bypasses the RHR heat exchangers and is used to maintain a constant return flow to the RCS. Instrumentation is provided to monitor system pressure, temperature, and total flow, and to activate an alarm on system low flow.

The RHR system is also used for filling the refueling cavity before refueling. After refueling operations, water is pumped back to the RWST until the RPV water level is brought down to the desired level below the RPV flange. The remainder is removed via a drain connection at the bottom of the refueling canal.

When the RHR system is in operation, the water chemistry is the same as that of the reactor coolant. Provision is made for the sampling system to extract samples from the flow of reactor coolant downstream of the RHR heat exchangers. A local sampling point is also provided on each RHR train between the pump and heat exchanger.

5.5.6.2.1 Component Description

The materials used to fabricate RHR system components are in accordance with applicable code requirements. All parts of components in contact with borated water are fabricated or clad with austenitic stainless steel or equivalent corrosion resistant material.

RHR component applicable codes and classification are provided in Table 5.5-9. Component parameters are listed in Table 5.5-10.

5.5.6.2.1.1 Residual Heat Removal Pumps

Two pumps are installed in the RHR system. The two pumps are vertical, centrifugal units with mechanical shaft seals. The pumps are sized to deliver sufficient reactor coolant flow through the RHR heat exchangers to meet the plant cooldown requirements. The use of two pumps ensures that cooling capacity is only partially lost should one pump become inoperative.

The RHR pumps are protected from overheating and loss of suction flow by miniflow bypass lines that provide flow to the pump suction at all times. A control valve located in each miniflow line is regulated by a signal from the flow transmitters located in each pump discharge header. The control valves open on low RHR pump discharge flow and close when RHR flow has been established. To prevent pump to pump interaction as a result of differences between pump flow characteristics, check valves were installed downstream of the RHR heat exchangers. During minimum flow operation the check valve will prevent the stronger pump from dead heading or reversing flow into the weaker pump, thereby maintaining minimum required recirculation flow.

A pressure sensor in each pump discharge header provides a signal for an indicator in the control room. A high pressure alarm is also actuated by the pressure sensor.

5.5.6.2.1.2 Residual Heat Removal Heat Exchangers

Two RHR heat exchangers are installed in the system. The heat exchanger design is based on heat load and temperature differences between reactor coolant and CCW existing 20 hours after reactor shutdown when the temperature difference between the two systems is small. The decay heat removal used in the cooldown analysis is given in Table 5.5-8.

The RHR heat exchangers are part of the ECCS, supporting the recirculation mode in which long-term core cooling is provided during the accident recovery period. During the emergency core cooling recirculation phase, water from the containment recirculation sump flows through the tube side of the RHR heat exchangers, transferring heat from containment to the CCW system. Further discussion of the RHR heat exchangers in this mode is found in Section 6.3.2.4.4.

The most limiting RHR system heat exchanger design requirement is to remove decay heat, sensible heat and RCP heat at the design flow rates starting four hours following reactor shutdown. Less limiting, the initial heat removal provided by the RHR heat exchangers after a design basis LOCA occurs after the RWST inventory has been injected into the reactor. Under these conditions, the RHR heat exchangers are in service with a containment recirculation sump temperature well below the limiting condition. In addition to RHR heat exchangers, heat removal from containment following a LOCA is shared with the CFCUs.

The installation of two heat exchangers ensures that the heat removal capacity of the system is only partially lost if one heat exchanger becomes inoperative.

The RHR heat exchangers are of the shell and U-tube type. Reactor coolant circulates through the tubes, while CCW circulates through the shell. The tubes and other surfaces in contact with reactor coolant are austenitic stainless steel or equivalent corrosion resistant material. The shell is carbon steel. The tubes are welded to the tubesheet to prevent leakage of reactor coolant.

5.5.6.2.1.3 Residual Heat Removal System Valves

Valves that perform a modulating function are equipped with two sets of packing and an intermediate leakoff connection that discharges to the drain header.

Some manual valves and MOVs have backseats to facilitate repacking and to limit stem leakage when the valves are open. Leakoff connections are provided where required by valve size and fluid conditions.

5.5.6.2.2 System Operation

A discussion of RHR system operation during various reactor operating modes follows.

5.5.6.2.2.1 Reactor Startup

Generally, during cold shutdown, residual heat from the reactor core is being removed by the RHR system. The number of pumps and heat exchangers in service depends on the RHR load at the time.

At initiation of plant startup, the RCS is completely filled, and the pressurizer heaters are energized. The RHR pumps are operating, but a portion of the discharge is directed to the CVCS via a line that is connected to the common header downstream of the RHR heat exchanger. After the RCPs are running and the pressurizer steam bubble has formed, the RHR pumps are stopped. Indication of steam bubble formation is provided in the control room by the damping out of the RCS pressure fluctuations and by pressurizer level indication. The RHR system is then isolated from the RCS and the system pressure is controlled by normal letdown and the pressurizer spray and pressurizer heaters.

An alternative to this startup process is a vacuum refill method of filling the RCS, described in Section 5.1.7.1. This may result in starting the RCPs after the pressurizer steam bubble is formed.

5.5.6.2.2.2 Power Generation and Hot Standby Operation

During power generation and hot standby operation, the RHR system is not in service but is aligned for operation as part of the ECCS.

5.5.6.2.2.3 Reactor Shutdown

The initial phase of reactor cooldown is accomplished by transferring heat from the RCS to the SPCS through the use of the SGs.

When the reactor coolant nominal temperature and pressure are reduced to ≤ 350°F and ≤ 390 psig, respectively, the second phase of cooldown starts with the RHR system being placed in operation. Data and procedure reviews indicate it will require more than 4 hours after reactor shutdown to initiate RHR cooldown (Reference 12).

Startup of the RHR system includes a warm-up period during which time reactor coolant flow through the heat exchangers is limited to minimize thermal shock. The rate of heat removal from the reactor coolant is manually controlled by regulating the coolant flow through the RHR heat exchangers. By adjusting the control valves downstream of the RHR heat exchangers, the mixed mean temperature of the return flows is controlled. Coincident with the manual adjustment, the heat exchanger bypass valve contained in the common bypass line is regulated to give the required total flow.

The reactor cooldown rate is limited by RCS equipment cooling rates based on allowable stress limits, as well as the operating temperature limits of the CCW system. As the reactor coolant temperature decreases, the reactor coolant flow through the RHR heat exchangers is increased.

As cooldown continues, the pressurizer is filled with water and the RCS is operated in the water-solid condition.

At this stage, pressure is controlled by regulating the charging flow rate and the alternate letdown rate to the CVCS from the RHR system.

After the reactor coolant pressure is reduced and the temperature is 160°F or lower, the RCS may be opened for refueling or maintenance.

5.5.6.2.2.4 Refueling

Several systems may be used during refueling to provide borated water from the RWST to the refueling cavity. These include the RHR system, CSS, SI system, refueling water purification system, and the CVCS (which includes the liquid holdup tanks [LHUTs]). During this operation, the isolation valves to the RWST are opened.

The RVCH is removed. The refueling water is then pumped into the RPV and into the refueling cavity through the open RPV.

After the water level reaches the desired level, the RWST supply valves are closed, and RHR operation continues.

During refueling, the RHR system is maintained in service with the number of pumps and heat exchangers in operation as required by the heat load.

Following refueling, the RHR pumps are used to drain the refueling cavity to the top of the RPV flange, and reduce the level in the RPV to the desired level below the top of the RPV flange by pumping water from the RCS to the RWST.

5.5.6.3 Design Evaluation

Design features of the RHR system ensure safe and reliable system performance as discussed below.

5.5.6.3.1 System Availability and Reliability

The system is provided with two RHR pumps and two RHR heat exchangers arranged in separate flowpaths. If one of the two pumps or one of the two heat exchangers is not operable, safe cooldown of the plant is not compromised, although the time required for cooldown is extended.

To ensure reliability, the two RHR pumps are connected to two separate electrical buses so that each pump receives power from a different source. If a total loss of offsite power occurs while the system is in service, each bus is automatically transferred to a separate emergency diesel power supply.

5.5.6.3.2 Radiological Considerations

The highest radiation levels experienced by the RHR system are those that would result from a LOCA. Following a LOCA, the RHR system is used as part of the ECCS. During the recirculation phase of emergency core cooling, the RHR system is designed to operate for up to a year pumping water from the containment recirculation sump, cooling it, and returning it to the containment to cool the core.

Since the RHR system is located outside the containment, except for some valves and piping, most of the system is not subjected to the high levels of radioactivity in the containment post-accident environment. To ensure continued operation of the RHR system components, the valve motor operators, the RHR pump motors, and the RHR pump seals have been evaluated for operation in post-accident environments (refer to Section 5.5.6.4.11). Refer to Section 3.11 for details of the evaluation.

The operation of the RHR system does not involve a radiation hazard for the operators since the system is controlled remotely from the control room. If maintenance of the system is necessary, the portion of the system requiring maintenance is isolated by remotely operated valves and/or manual valves with stem extensions, which allow operation of the valves from a shielded location. The isolated piping is drained and flushed before maintenance is performed.

5.5.6.4 Safety Evaluation

5.5.6.4.1 General Design Criterion 2, 1967 - Performance Standards

All RHR components are located within the PG&E Design Class I auxiliary and containment buildings. These buildings, or applicable portions thereof, are designed to withstand the effects of winds and tornadoes (refer to Section 3.3), floods and tsunamis (refer to Section 3.4), external missiles (refer to Section 3.5), earthquakes (refer to Section 3.7), and other natural phenomena, to protect the RHR SSCs, ensuring their design functions will be performed.

PG&E Design Class I SSCs of the RHR system are seismically qualified to ensure their design functions can be performed following an earthquake, as described in Section 3.7.

5.5.6.4.2 General Design Criterion 3, 1971 - Fire Protection

The RHR system is designed to meet the requirements of 10 CFR 50.48(a) and (c) (refer to Section 9.5.1).

Power is removed from the RHR suction line isolation valve motors when the RHR system is isolated (refer to Section 5.5.6.4.10).

5.5.6.4.3 General Design Criterion 9, 1967 - Reactor Coolant Pressure Boundary

The portion of the RHR system that is part of the RCPB is designed and constructed so as to have an exceedingly low probability of gross rupture or significant leakage throughout its lifetime. The RCPB is designed to accommodate the system pressures and temperatures attained under all expected modes of plant operation, including all anticipated transients, and to maintain the stresses within applicable stress limits (refer to Section 5.2.3.3).

5.5.6.4.4 General Design Criterion 11, 1967 - Control Room

Instrumentation, alarms, and controls are provided in the control room for operators to monitor and maintain RHR system parameters. Instrumentation and controls for the RHR system are further discussed in Sections 5.5.6.4.5 and 6.3.3.4. Cold shutdown from outside the control room is accomplished with the use of RHR system indicators and controls which are located outside the control room. Interlocks with MOVs are discussed in Section 7.6.2.

5.5.6.4.5 General Design Criterion 12, 1967 - Instrumentation and Control Systems

Instrumentation and controls are provided, as required, to monitor and maintain RHR variables within prescribed operating ranges. Specifically, the RHR system variables that are monitored are: RHR heat exchanger outlet temperature; RHR pump-motor temperature and discharge pressure; and RHR system flow to the RCS hot and cold legs. An RHR pump discharge header flow meter controls the RHR pump minimum flow. Further discussion of these instruments and controls is provided by Section 6.3.3.4.

5.5.6.4.6 General Design Criterion 40, 1967 – Missile Protection

The provisions taken to protect the ESF (containment isolation) portion of the RHR system from damage that might result from missiles and dynamic effects associated with equipment and high-energy pipe failures are discussed in Sections 3.5, 3.6, and 6.2.4.

5.5.6.4.7 General Design Criterion 49, 1967 - Containment Design Basis

The RHR system supply line from the RCS hot leg loop 4 containment penetration, including the system piping and valves required for containment isolation, is designed to withstand the pressures and temperatures that could result from a LOCA without exceeding containment design leakage rates. Refer to Sections 3.8.2.1.3 and 6.3.3.17 for additional justification. Refer to Section 6.3 and Table 6.2-39 for penetrations that are part of ECCS.

5.5.6.4.8 General Design Criterion 54, 1971 - Piping Systems Penetrating Containment

The RHR system supply line from the RCS hot leg loop 4 isolation valves required for containment closure are periodically tested as part of the IST Program Plan for operability in accordance with GDC 54, 1971. Test connections are provided in the piping of applicable penetrations to verify valve leakages are within prescribed limits. Testing of the components required for the CIS is discussed in Section 6.2.4. Refer to Section 6.3 and Table 6.2-39 for penetrations that are part of ECCS.

5.5.6.4.9 General Design Criterion 55, 1971 - Reactor Coolant Pressure Boundary Penetrating Containment

The RHR system is designed such that each RHR line that is part of the RCPB that penetrates containment is provided with CIVs in compliance with GDC 55, 1971. Refer to Section 6.2.4.2.1 and Table 6.2-39 for penetration and configuration details with regards to GDC 55, 1971.

5.5.6.4.10 Residual Heat Removal System Safety Function Requirements

(1) Overpressurization Protection

The inlet line to the RHR system is equipped with a pressure relief valve sized to relieve the combined flow of both charging pumps into the RCS and thus prevents exceeding the RHR system design pressure.

Each discharge line to the RCS is equipped with a pressure relief valve located in the ECCS (refer to Figure 3.2-9, Sheets 5 and 6 and Figure 3.2-10, Sheets 1 and 2). They relieve the maximum possible back-leakage through the valves separating the RHR system from the RCS.

The design of the RHR system includes the following features for valves on the inlet line between the high-pressure RCS and the lower pressure RHR system:

(1) To prevent both RHR suction line isolation valves from opening as a result of fire damage to electrical cables, ac power is removed from the operators of the indicated MOVs for plant conditions during which the RHR system is isolated.

(2) The isolation valve adjoining the RCS is interlocked with a pressure signal to prevent it from being opened whenever the RCS pressure is greater than a set value.

(3) The second isolation valve, the one adjoining the RHR system, is similarly interlocked with a pressure signal to prevent opening if RCS pressure is above a set value, and a pressurizer temperature signal to prevent opening if it exceeds a set value.

(4) The RHR suction valves interlock relays are powered from the solid state protection system (SSPS) output cabinets. To maintain the ability to open the RHR suction valve(s) when the SSPS output cabinet(s) are de-energized in Mode 6 or defueled, a jumper(s) is used to lock-in the RHR suction valve(s) open permissive. This defeats the applicable RHR system overpressurization/temperature protection. Jumper installation is limited to Mode 6 and defueled only.

Refer to Section 7.6 for a more complete discussion of the permissive interlocks on these isolation valves.

(2) Protection from Missiles

The provisions taken to protect the non-ESF PG&E Design Class I portion of the RHR system from missiles are discussed in Section 3.5. The RHR system design is such that physical protection is adequately provided against physical hazards in areas through which the system is routed.

(3) Shared Function

The safety function performed by the RHR system is not compromised by its normal function during plant cooldown. The valves associated with the RHR system are normally aligned to allow immediate use of this system in its ESF mode of operation. The system has been designed in such a manner that two redundant flow circuits are available, ensuring the availability of at least one train for safety purposes.

The normal plant cooldown function of the RHR system is accomplished through a suction line arrangement that is independent of any safety function. The normal cooldown return lines are arranged in parallel redundant circuits and are utilized also as the low-head SI lines to the RCS. Utilization of the same return circuits for the safety function as well as for normal cooldown, lends assurance to the proper functioning of these lines for safety purposes.

(4) Protection Against High Energy Pipe Rupture Effects

The provisions taken to protect the non-ESF PG&E Design Class I portion of the RHR system from damage that might result from dynamic effects associated with a postulated rupture of high-energy piping are discussed in Section 3.6. The RHR system design is such that physical protection is adequately provided against physical hazards in areas through which the system is routed.

(5) Protection from Moderate Energy Pipe Rupture Effects – Outside Containment

The provisions taken to provide protection of the PG&E Design Class I portion of the RHR system located outside containment from the effects of moderate energy pipe failure are discussed in Section 3.6.

(6) Protection from Jet Impingement – Inside Containment

The provisions taken to provide protection of the PG&E Design Class I portion of the RHR system located inside containment from the effects of jet impingement which may result from high energy pipe rupture are discussed in Section 3.6.

(7) Protection from Flooding Effects

The provisions taken to provide protection of the PG&E Design Class I portion of the RHR system from flooding that might result from the effects associated with a postulated rupture of piping are discussed in Section 3.6.

If a pipe rupture or equipment failure occurs in a RHR pump compartment, overflow from one pump compartment would drain through a 14-inch line to the pipe trench rather than flood the adjacent compartment. Additionally, the maximum calculated flood level within each compartment is below the elevation of the RHR pump motors.

5.5.6.4.11 10 CFR 50.49 - Environmental Qualification of Electrical Equipment Important to Safety for Nuclear Power Plants

The RHR SSCs required to function in harsh environments under accident conditions are qualified to the applicable environmental conditions to ensure that they will continue to perform their safety functions. Refer to Section 6.3 for RHR SSCs that are also a part of ECCS. Section 3.11 describes the DCPP EQ Program and the requirements for the environmental design of electrical and related mechanical equipment. The affected equipment includes flow and pressure transmitters, valve motors and operators, and switches, and is listed on the EQ Master List. Refer to Section 5.5.6.3.2 for additional information.

5.5.6.4.12 10 CFR 50.55a(f) - Inservice Testing Requirements

The IST requirements for the RHR system are contained in the DCPP IST Program Plan.

5.5.6.4.13 10 CFR 50.55a(g) - Inservice Inspection Requirements

The RHR system is inspected in accordance with ASME BPVC Section XI-2001 through 2003 Addenda, as stated in the DCPP ISI Program Plan.

5.5.6.4.14 10 CFR 50.48(c) – National Fire Protection Association Standard NFPA 805

The RHR system is designed to meet the nuclear safety and radioactive release performance criteria of Section 1.5 of NFPA 805, 2001 Edition (refer to Section 9.5.1).

5.5.6.4.15 Generic Letter 87-12, July 1987 - Loss of Residual Heat Removal While the Reactor Coolant System is Partially Filled

The RHR system design and operating procedures ensure that decay heat removal is provided and that the integrity of the RCPB is ensured during operation with a partially filled RCS. Training is provided to operators to ensure RCS inventory and RHR flow are maintained during operation in this condition.

5.5.6.4.16 Generic Letter 88-17, October 1988 - Loss of Decay Heat Removal 10 CFR 50.54(f)

There are limited periods during plant operation when the RCS may be operated with reduced inventory while irradiated fuel is in the RPV. Examples include refueling outages or maintenance evolutions. A reduced inventory condition, including mid-loop conditions, exists whenever the RCS level is lower than 111 feet elevation, which is three feet below the RPV flange. This section describes the administrative controls and instrumentation relied upon during reduced inventory operations.

Procedures and administrative controls have been implemented to assure that containment closure will be achieved prior to the time at which core uncovery could result from a loss of decay heat removal coupled with the inability to initiate alternate core cooling or addition of water to the RCS inventory. Procedures have been implemented to avoid operations that deliberately or knowingly lead to perturbations to the RCS and/or to systems that are necessary to maintain the RCS in a stable and controlled condition while the RCS is in a reduced inventory condition.

At least two independent, continuous temperature indications that are representative of the core exit conditions are available whenever the RCS is in a mid-loop condition and the RVCH is located on top of the RPV.

At least two independent, continuous RCS water level indications are provided whenever the RCS is in a reduced inventory condition. Water level indications are periodically checked and recorded by an operator or automatically and continuously monitored and alarmed.

At least two available or operable means of adding additional inventory to the RCS are available that are in addition to pumps that are a part of the normal decay heat removal systems. Specifically, prior to draining to mid-loop, one charging pump, gravity fill makeup from the RWST, and an SI pump with associated hot leg flow path to the RCS are available.

Analyses have been performed to supplement existing information and to develop a basis for other actions.

A pressurization analysis for shutdown conditions was performed to evaluate, for low-to-high decay heat shutdown conditions, the thermal hydraulic response, particularly the maximum RCS pressure limits, if no operator recovery actions were taken to limit or prevent boiling in the RCS (References 13 and 14). The results of these analyses are used to determine acceptable RCS vent path configurations used during outage conditions as a contingency to mitigate RCS pressurization upon a postulated loss of RHR. Typical RCS vent path openings capable of use include the RPV flange, one or more PSVs or PORVs, SG primary hot leg manways, or combinations of these openings depending on the decay heat load.

Other analyses performed include the pressurization and integrity of containment after a loss of RHR while at mid-loop, and a level instrumentation analysis in order to understand its behavior during reduced inventory.

5.5.6.4.17 Generic Letter 89-10, June 1989 – Safety-Related Motor-Operated Valve Testing and Surveillance

RHR system MOVs 8701 and 8702 are subject to the requirements of Generic Letter 89-10, June 1989, and associated Generic Letter 96-05, September 1996, and meet the requirements of the DCPP MOV Program Plan.

5.5.6.4.18 Generic Letter 95-07, August 1995 - Pressure Locking and Thermal Binding of Safety- Related Power-Operated Gate Valves

RHR system power operated gate valves 8701 and 8702, which were determined to be susceptible to pressure locking, were modified by installing bonnet cavity leakoffs with block valves to the high pressure inlet lines to prevent pressure locking. No power-operated gate valves in the RHR system were found susceptible to thermal binding.

5.5.6.4.19 Generic Letter 98-02, May 1998 - Loss of Reactor Coolant Inventory and Associated Potential for Loss of Emergency Mitigation Functions While in a Shutdown Condition

DCPP Unit 1 and Unit 2 are vulnerable to the potential draindown of the RCS to the RWST, and render the RHR system inoperable, if valve 8741 were inadvertently opened with RHR in service in Mode 4. Procedural controls are in place to prevent this from occurring.

5.5.6.4.20 NRC Bulletin 88-04, May 1988 - Potential Safety-Related Pump Loss

The RHR system is designed to ensure the installed miniflow capacity is adequate for even a single pump in operation and to prevent dead-heading of either RHR pump due to pump-to-pump interaction during miniflow operation.

5.5.6.4.21 Branch Technical Position RSB 5-1, 1980 – Design Requirements of the Residual Heat Removal System

The DCPP reactor design is such that it can be taken from normal operating conditions to cold shutdown using only PG&E Design Class I systems, with either only onsite or only offsite power, and with the most limiting single failure.

DCPP conducted tests with supporting analysis to: (a) confirm that adequate mixing of borated water was achieved under natural circulation conditions with an estimation of the times required to achieve such mixing; (b) confirm that the cooldown under natural circulation was achieved within the limits specified in the emergency operating

procedures; and (c) confirm no credible single failure would preclude achieving cold shutdown conditions.

5.5.6.5 Tests and Inspections

Periodic visual inspections and preventive maintenance are conducted during plant operation according to normal industrial practice.

The instrumentation channels for the RHR pump flow instrumentation devices are calibrated on a nominal 24-month frequency.

The RHR pumps are tested by starting them periodically.

5.5.6.6 Instrumentation Applications

Refer to Section 5.5.6.4.5 for the instrumentation applications related to the RHR system.

5.5.7 REACTOR COOLANT CLEANUP SYSTEM

The CVCS provides reactor coolant cleanup and is discussed in Section 9.3. The radiological considerations are discussed in Chapter 11.

5.5.8 MAIN STEAM LINE AND FEEDWATER PIPING

Main steam line piping is covered in Section 10.3. Feedwater piping is covered in Section 10.4.

5.5.9 PRESSURIZER

The pressurizer provides a point in the RCS where liquid and vapor are maintained at equilibrium temperature and pressure under saturated conditions for pressure control purposes.

During an insurge, the spray system, fed from two cold legs, condenses steam in the vessel to prevent the pressurizer pressure from reaching the setpoint of the PORVs. During an outsurge, flashing of water to steam and generation of steam by automatic actuation of the heaters helps keep the pressure above the low-pressure reactor trip setpoint. Heaters are also energized, on high water level during insurges, to heat the subcooled surge water entering the pressurizer from the RCL.

5.5.9.1 Design Bases

The general configuration of the pressurizer is shown in Figure 5.5-8. The design data of the pressurizer are provided in Table 5.5-12. Codes and material requirements are provided in Section 5.2.

5.5.9.1.1 Pressurizer Surge Line

The surge line is sized to limit the pressure drop between the RCS and the PSVs with maximum allowable discharge flow from the PSVs. Overpressure of the RCS does not exceed 110 percent of the design pressure. The surge line and the thermal sleeves at each end are designed to withstand the thermal stresses resulting from volume surges, which occur during operation.

5.5.9.1.2 Pressurizer

The pressurizer volume (refer to Table 5.5-12) satisfies the following requirements:

(1) The combined saturated water volume and steam expansion volume is sufficient to provide the desired pressure response to system volume changes.

(2) The water volume is sufficient to prevent the heaters from being uncovered during a step load increase of 10 percent of full power.

(3) The steam volume is large enough to accommodate the surge resulting from the design step load reduction from full load with reactor control and steam dump without the water level reaching the high level reactor trip point.

(4) The steam volume is large enough to prevent water relief through the PSVs following a loss of load with the high water level initiating a reactor trip.

(5) The pressurizer does not empty following reactor and turbine trip.

(6) The emergency core cooling signal is not activated during reactor trip and turbine trip.

5.5.9.2 Design Description

The pressurizer is designed to accommodate positive and negative reactor coolant surges caused by RCS transients.

5.5.9.2.1 Pressurizer Surge Line

The pressurizer surge line connects the pressurizer to one reactor hot leg. The line enables continuous coolant volume/pressure adjustments between the RCS and the pressurizer.

5.5.9.2.2 Pressurizer

The pressurizer is a vertical, cylindrical vessel with essentially hemispherical top and bottom heads constructed of carbon steel, with austenitic stainless steel cladding on all surfaces exposed to the reactor coolant.

The surge line nozzle and removable electric heaters are installed in the bottom head. The heaters are removable for maintenance or replacement. A thermal sleeve is provided to minimize stresses in the surge line nozzle. A screen at the surge line nozzle and baffles in the lower section of the pressurizer prevent a cold insurge of water from flowing directly to the steam/water interface and assist mixing.

Spray line nozzles and PORV/PSV connections are located in the top head of the vessel. Spray flow is modulated by automatically controlled air-operated valves. The spray valves can also be operated manually by a switch in the control room.

A small continuous spray flow is provided through a manual bypass valve around the power-operated spray valves to ensure that the pressurizer liquid is homogeneous with the coolant and to prevent excessive cooling of the spray piping. During an outsurge from the pressurizer, flashing of water to steam and generating of steam by automatic actuation of the heaters keep the pressure above the minimum allowable limit. During an insurge from the RCS, the spray system, which is fed from two cold legs, condenses steam in the vessel to prevent the pressurizer pressure from reaching the setpoint of the PORVs for normal design transients. Heaters are energized on high water level during insurge to heat the subcooled surge water that enters the pressurizer from the RCL. The heaters are further discussed in Section 8.3.

5.5.9.2.2.1 Pressurizer Support

The skirt-type support, shown in Figure 5.5-12, is attached to the lower head and extends for a full 360° around the vessel. The lower part of the skirt terminates in a bolting flange with bolt holes to secure the vessel to its structural steel framework. The skirt-type support is provided with ventilation holes around its upper perimeter to ensure free convection of ambient air past the heater plus connector ends for cooling.

5.5.9.2.2.2 Pressurizer Instrumentation

Refer to Chapter 7 for details of the instrumentation associated with pressurizer pressure, level, and temperature.

5.5.9.2.2.3 Spray Line Temperatures

Temperatures in the spray lines from two loops are measured and indicated. Alarms from these signals are actuated by low spray water temperature. Low temperature conditions indicate insufficient flow in the spray lines.

5.5.9.2.2.4 Safety and Relief Valve Discharge Temperatures

Temperatures in the PSV and PORV discharge lines are measured and indicated. An increase in a discharge line temperature is an indication of leakage through the associated valve.

5.5.9.3 Design Evaluation

The pressurizer is designed to provide safe and reliable RCS pressure control.

5.5.9.3.1 System Pressure

RCS pressure is maintained by the steam bubble in the pressurizer. During normal operation, the pressurizer maintains RCS pressure by automatic operation of pressurizer heaters and spray. When the pressurizer is filled with water (i.e., near the end of the second phase of plant cooldown and during initial system heatup, if the vacuum refill method of filling the RCS is not used as described in Section 5.1.7.1), RCS pressure is maintained by the RHR, CVCS, and LTOP systems. Safety limits are established to control the rate of temperature change in the pressurizer. These safety limits are administratively controlled to ensure that RCS pressure and temperature do not exceed the maximum transient value allowed under ASME BPVC Section III, and thereby ensure continued integrity of the RCPB.

5.5.9.3.2 Pressurizer Performance

The pressurizer has a minimum free internal volume. The normal operating water volume at full load conditions is 60 percent of the minimum free internal vessel volume. Under part load conditions, the water volume in the vessel is reduced for proportional reductions in plant load to 22 percent of free vessel volume at zero power level. During a shutdown to Mode 3 and when power is ≤20%, the pressurizer water volume is controlled between 22 percent and 35 percent of the indicated level. During shutdown modes 3, 4, and 5, the pressurizer water volume is controlled between ≥22 percent and ≤90 percent of the indicated level. Whenever the LTOP system is enabled as described in Section 5.2.3.28, the administrative controls and requirements of the PTLR take precedence. Pressurizer performance has been analyzed for the various plant operating transients discussed in Section 5.2.2.1. The design pressure was not exceeded with the pressurizer design parameters listed in Table 5.5-12.

5.5.9.3.3 Pressure Setpoints

The RCS design and operating pressure together with the safety, PORV, and pressurizer spray valves setpoints, and the protection system setpoint pressures are listed in Section 5.2.2.2. The design pressure allows for operating transient pressure changes. The selected design margin considers core thermal lag, coolant transport times and pressure drops, instrumentation and control response characteristics, and system relief valve characteristics.

5.5.9.3.4 Pressurizer Spray

Two separate, automatically controlled spray valves with remote-manual overrides are used to initiate pressurizer spray. In parallel with each spray valve is a manual throttle valve that permits a small, continuous flow through both spray lines to reduce thermal stresses and thermal shock when the spray valves open, and to help maintain uniform water chemistry and temperature in the pressurizer. Spray flow is not normally initiated if the temperature difference between the pressurizer and spray fluid exceeds 320°F. Temperature sensors with low alarms are provided in each spray line to alert the operator to insufficient bypass flow. The layout of the common spray line piping to the pressurizer forms a water seal that prevents the steam buildup back to the control valves. The spray rate is selected to prevent the pressurizer pressure from reaching the operating setpoint of the PORVs during a step reduction in power level of 10 percent of full load.

The pressurizer spray lines and valves are large enough to provide adequate spray using as the driving force the differential pressure between the surge line connection in the hot leg and the spray line connection in the cold leg. The spray line inlet connections extend into the cold leg piping in the form of a scoop so that the velocity head of the RCL flow adds to the spray driving force. The spray valves and spray line connections are arranged so that the spray will operate when one RCP is not operating. The line may also be used to assist in equalizing the boron concentration between the RCLs and the pressurizer.

A flowpath from the CVCS to the pressurizer spray line is also provided. This additional facility provides auxiliary spray to the vapor space of the pressurizer during cooldown if the RCPs are not operating. The thermal sleeves on the pressurizer spray connection and the spray piping are designed to withstand the thermal stresses resulting from the introduction of cold spray water.

5.5.9.3.5 Pressurizer Design Analysis

The occurrences for pressurizer design cycle analysis are defined as follows:

(1) For design purposes, the temperature in the pressurizer vessel is always assumed to equal saturation temperature for the existing RCS pressure, except in the pressurizer steam space subsequent to a pressure increase.

In this case, the temperature of the steam space will exceed the saturation temperature since an isentropic compression of the steam is assumed.

(2) The temperature shock on the spray nozzle is assumed to equal the temperature of the nozzle minus the cold leg temperature, and the temperature shock on the surge nozzle is assumed to equal the pressurizer water space temperature minus the hot leg temperature.

(3) Pressurizer spray is assumed to be initiated instantaneously reaching its design value as soon as the RCS pressure increases 40 psi above the nominal operating pressure. Spray is assumed to be terminated as soon as the RCS pressure falls below the normal operating pressure-plus 40 psi-level.

(4) Unless otherwise noted, pressurizer spray is assumed to be initiated once during each transient condition. The pressurizer surge nozzle is also assumed to be subject to one temperature transient per transient condition, unless otherwise noted.

(5) At the end of each transient, except the faulted conditions, the RCS is assumed to return to a load condition consistent with the plant heatup transient.

(6) Temperature changes occurring as a result of pressurizer spray are assumed to be instantaneous. Temperature changes occurring on the surge nozzle are also assumed to be instantaneous.

(7) Whenever spray is initiated in the pressurizer, the pressurizer water level is assumed to be at the no-load level.

5.5.9.4 Tests and Inspections

The pressurizer is designed and constructed in accordance with ASME BPVC Section III-1965 through Summer 1966 Addenda. Peripheral support rings are furnished for the insulation modules. The pressurizer quality assurance program is given in Table 5.5-13. Refer to Sections 5.1.8.19, 5.1.8.20, 5.2.3.14, and 5.2.3.15 for further discussion of testing and inspection of the RCS.

5.5.10 PRESSURIZER RELIEF TANK

The PRT accommodates the pressurizer and other relief valve discharges.

5.5.10.1 Design Bases

Design data for the PRT are provided in Table 5.5-14. Codes and materials applicable to the tank are discussed in Section 5.2.

The tank design is based on the requirement to condense and cool a discharge of pressurizer steam equal to 110 percent of the volume above the full power pressurizer water level setpoint. The tank is not designed to accept a continuous discharge from the pressurizer. The volume of water in the tank (refer to Table 5.1-1) is capable of absorbing the heat from the assumed discharge, with an initial temperature of 120°F and increasing to a final temperature of 200°F. The tank is cooled, when necessary, by manual spraying of cool water into the tank and draining the warm mixture to the RCDT.

5.5.10.2 Design Description

The PRT is a horizontal, cylindrical vessel with elliptical ends, which condenses and cools the discharge from the PSVs and PORVs. Discharge from smaller relief valves located inside and outside the containment is also piped to the PRT. The PRT normally contains water and a predominantly nitrogen atmosphere. Provision is made to permit the gas in the tank to be periodically monitored for hydrogen and/or oxygen concentrations. Through its connection to the GRW system, the PRT provides a means for removing any noncondensable gases from the RCS that might collect in the pressurizer vessel.
Steam is discharged through a sparger pipe under the water level. This condenses and cools the steam by mixing it with water that is near ambient temperature. The PRT is equipped with an internal spray and a drain that are used to cool the PRT following a discharge. A flanged nozzle is provided on the PRT for the pressurizer discharge line connection. The PRT is protected against a discharge exceeding its design pressure by two rupture disks that discharge into the reactor containment.

5.5.10.2.1 Pressurizer Relief Tank Pressure

The PRT pressure transmitter supplies a signal for an indicator with a high-pressure alarm. Also, the PRT pressure transmitter provides a signal to close the air-operated valve to the GRW system vent header on high pressure.

5.5.10.2.2 Pressurizer Relief Tank Level

The PRT level transmitter supplies a signal for an indicator with high and low level alarms.

5.5.10.2.3 Pressurizer Relief Tank Water Temperature

The temperature of the water in the PRT is indicated in the control room. An alarm actuated by high temperature informs the operator that cooling of the tank contents is required.

5.5.10.3 Design Evaluation

The volume of water in the PRT is capable of absorbing heat from the pressurizer discharge during a step load decrease of 10 percent. Water temperature in the PRT is maintained at the nominal containment temperature.

The rupture disks on the PRT have a relief capacity equal to the combined capacity of the PSVs. The PRT design pressure is twice the calculated pressure resulting from the maximum design PSV discharge described above. The PRT and rupture disks holders are also designed for full vacuum to prevent tank collapse if the contents cool following a discharge without nitrogen being added. The discharge piping from the PSVs and PORVs to the PRT is sufficiently large to prevent back pressure at the PSVs from exceeding 20 percent of the setpoint pressure at full flow.

5.5.11 VALVES

The PG&E Design Class I function of the valves within the RCPB listed in Table 5.2-9 is to act as pressure-retaining components and leaktight barriers during normal plant operation and accidents.

5.5.11.1 Design Bases

As noted in Section 5.2, all RCS valves including those in connected systems, out to and including the second isolation valve, are normally closed or capable of automatic or remote manual closure. Valve closure time must be such that for any postulated component failure outside the system boundary, the loss of reactor coolant event would not prevent orderly reactor shutdown and cooldown assuming makeup is provided by normal makeup systems. Normal makeup systems are those systems normally used to maintain reactor coolant inventory under startup, hot standby, operation, or cooldown conditions. If the second of two normally open check valves is considered as the pressure boundary, means are provided to periodically assess back-flow leakage of the first valve when closed. For a check valve to qualify as the system pressure boundary, it must be located inside the containment.

RCPB valves are listed in Table 5.2-9. Materials of construction are specified to minimize corrosion/erosion and to ensure compatibility with the environment. Design parameters are provided in Table 5.5-15.

Valves are designed and fabricated in accordance with either USAS B16.5, MSS-SP-66, or ASME BPVC Section III-1968 or 1974. To the extent practicable, valve leakage is minimized by design.

5.5.11.2 Design Description

Gate valves are either wedge design or parallel disk and are essentially straight through. The wedge may be either split or solid. All gate valves have a backseat,

outside screw and yoke. Globe valves, "T" and "Y" style, are full-ported with outside screw and yoke construction. Ball valves are V-notch design for equal percentage flow characteristics. Check valves are spring-loaded lift piston types for sizes 2 inches and smaller, and swing type for sizes 2-1/2 inches and larger. All check valves containing radioactive fluid are stainless steel and do not have body penetrations other than the inlet, outlet, and bonnet. The check hinge is serviced through the bonnet. The RHR heat exchanger outlet check valves have hinge pin covers.

All valves in the RCS that are in contact with the coolant are constructed primarily of stainless steel. Other materials in contact with the coolant, such as for hard surfacing and packing, are special materials.

All RCPB manual and MOVs that are 3 inches and larger are provided with double-packed stuffing boxes and stem intermediate lantern gland leakoff connections. Some of the throttling control valves, regardless of size, are provided with double-packed stuffing boxes and with stem leakoff connections. All leakoff connections are piped to a closed collection system. Leakage to the atmosphere is essentially zero for these valves.

Each accumulator check valve is designed with a low-pressure drop configuration with all operating parts contained within the body. The disk has unlimited rotation to provide a change of seating surface and alignment after each valve opening.

Valves at the RHR system interface are provided with interlocks that meet the intent of Reference 1. These interlocks are discussed in detail in Sections 5.5.6 and 7.6.

5.5.11.3 Design Evaluation

Stress analysis of the RCL/support system, discussed in Sections 3.9 and 5.2, ensure acceptable stresses for all valves in the RCPB. Reactor coolant chemistry parameters are specified to minimize corrosion. Periodic analyses of coolant chemical composition, discussed in the DCPP Equipment Control Guidelines, ensure that the reactor coolant meets these specifications. The upper-limit coolant velocity of about 50 feet per second minimizes erosion. Valve leakage is minimized by design features as discussed above.

5.5.11.4 Tests and Inspections

Hydrostatic, seat leakage, and operation tests are performed on RCPB valves in accordance with ASME BPVC Section XI, Subsection IWV, (hydrostatic) and the IST Program Plan (all other testing), as required by the Technical Specifications and 10 CFR 50.55a. Refer to Sections 5.1.8.19, 5.1.8.20, 5.2.3.14, and 5.2.3.15 for further discussion of testing and inspection of the RCS.

There are no full-penetration welds within valve body walls. Valves are accessible for disassembly and internal visual inspection.

5.5.12 SAFETY AND RELIEF VALVES

The pressurizer is equipped with PSVs and PORVs for overpressure protection and control. Their use is described in Section 5.2.2.2.

5.5.12.1 Design Bases

The combined capacity of the PSVs is designed to accommodate the maximum surge resulting from complete loss of load. This objective is met without reactor trip or any operator action, provided the main steam safety valves open as designed when steam pressure reaches the main steam safety valve setting. The PORVs are designed to limit pressurizer pressure to a value below the fixed high-pressure reactor trip setpoint. The PORVs are also credited to prevent pressurizer overfill in a spurious SI event (refer to Section 15.2.15.3).

5.5.12.2 Design Description

The PSVs are totally enclosed pop type. The valves are spring loaded, self-actuated, and have back pressure compensation features.

The pressurizer is equipped with three PORVs, each with a corresponding PORV block valve. The PORVs are air-operated and actuated by Class 1E 125-Vdc solenoid valves that are energized-to-open, spring-to-close. The circuits to the solenoid valves are supplied with redundant interlocks that prevent energization below normal operating pressure. Control power is Class 1E 125-Vdc from the station batteries (refer to Section 8.3.2). Indication is powered from the Class 1E 120-Vac instrument power supply system. The PORV block valves are shown schematically in Figure 3.2-7. Each of the three valves is powered from a separate Class 1E 480-V bus.

Positive indication of PORV position is obtained by a direct, stem-mounted indicator, which mechanically actuates limit switches at the full-open and full-closed valve stem positions. Acoustic monitors located in the downstream piping provide indication of PSV positions. The acoustic position indication is seismically qualified to the DDE and HE and environmentally qualified. Sections 3.10 and 3.11 discuss equipment qualification. An alarm is provided in the control room to signal if a PORV is not fully closed.

The 6-inch pipes connecting the pressurizer nozzles to their respective PSVs are shaped in the form of a loop seal. This arrangement is necessary to accommodate thermal movement and the collection of condensate for the water loop seal. However, the PSVs have been converted from water-seated to steam-seated, and the water loop seal was eliminated by continuously draining the condensate back to the pressurizer liquid space. With the elimination of the water loop seal, hydraulic loading due to the presence of water in the loop seal is no longer a concern.

The PORVs are quick-opening, operated automatically or by remote control. Remotely operated stop valves are provided to isolate the PORVs if excessive leakage develops.

Temperatures in the PSV and PORV discharge lines are measured and indicated. An increase in a discharge line temperature is an indication of leakage through the associated valve. Design parameters for the pressurizer spray control, PSV, and PORVs are provided in Table 5.5-16.

5.5.12.3 Design Evaluation

The PSVs prevent RCS pressure from exceeding 110 percent of design pressure. The pressurizer PORVs prevent actuation of the fixed high-pressure trip for all design transients up to and including the design step load decrease, with steam dump but without reactor trip. The PORVs also limit undesirable opening of the spring-loaded PSVs.

The mounting of these valves is designed to accommodate the magnitude and direction of thrust of the PSV discharges. In addition, the physical layout is such as to limit the piping reaction loads on these valves.

5.5.12.4 Tests and Inspections

PSVs and PORVs, as well as the corresponding PORV block valves, were tested on a prototypical basis to demonstrate their ability to open and close under expected operating conditions for design basis transients and accidents. Qualification criteria include provisions for the associated circuitry, piping, and supports as well as the valves themselves.

Each pressurizer PORV will be demonstrated operable at least once per 24 months by performing a channel calibration of the actuation instrumentation. This frequency interval is subject to Surveillance Requirement 3.0.2 of the Technical Specifications.

The only other testing performed on PSVs and PORVs, other than operational tests and inspections, is the required hydrostatic, seat leakage, and operation tests. These tests ensure that the valves will operate as designed. Refer to Sections 5.1.8.19, 5.1.8.20, 5.2.3.14, and 5.2.3.15 for further discussion of testing and inspection of the RCS.

There are no full-penetration welds within the valve body walls. Valves are accessible for disassembly and internal visual inspection.

5.5.13 COMPONENT SUPPORTS

RCS component supports are designed to maintain safe and reliable component and system operation.

5.5.13.1 Design Bases

Component supports allow virtually unrestrained lateral thermal movement of the loop during plant operation and provide restraint to the loops and components during accident conditions. The loading combinations and stress limits are discussed in Section 5.2. The design maintains the integrity of the RCPB for normal and accident conditions and satisfies the requirements of the piping code. Results of piping and supports stress evaluation are presented in Section 5.2.2.1.10.4 and Table 5.2-5 and Section 5.2.2.1.10.5 and Table 5.2-8, respectively.

5.5.13.2 Design Description

The support structures for the SG lower supports and the RCP supports are primarily welded structural steel sections. The SG upper supports consist of a steel ring with lateral bumpers and four snubbers per SG. The primary equipment supports consist of both linear-type components (tension and compression struts, columns, and beams) and plate and shell components. The RPV supports incorporate a closed, grout-filled steel box ring-type structure.

Attachments to the supported equipment are the nonintegral type that are bolted to or bear against the components. The supports-to-concrete attachments are either embedded anchor bolts or fabricated assemblies. The supports permit virtually unrestrained thermal growth of the supported systems but restrain vertical, lateral, and rotational movement resulting from seismic and pipe break loadings. This is accomplished using spherical bushings in the SG columns for vertical support and structural frames, hydraulic snubbers, and struts for lateral support.

The principal support material is welded and bolted structural steel that is subjected to Charpy V-notch impact tests in accordance with ASTM Standard Method A370. Material properties are discussed in Section 5.2.2.3. The supports for the various components are described in the following paragraphs.

5.5.13.2.1 Reactor Support

The reactor is supported on a massive concrete structure that also serves as a biological shield. Forces are transmitted from the reactor to the concrete support structure by an octagonal closed steel box that provides support at four of the eight reactor nozzles as shown in Figure 5.5-9. The bearing plates below the reactor nozzle support shoes contain cooling water passages to control the temperature of the supporting concrete. The reactor support resists seismic loads and coolant loop (hot and cold leg) piping reactions. The reactor support system allows the reactor to expand radially over the supports but resists translational and torsional movement by the combined tangential restraining action of each nozzle support.

5.5.13.2.2 Steam Generator Supports

The SGs are supported by two independent upper and lower structural systems as shown in Figures 5.5-10 and 5.5-11 and described below:

(1) Vertical Supports

Four vertical pipe columns for each SG provide full vertical restraint while allowing free movement radially with respect to the reactor. These are bolted at the top to the SG and at the bottom to the concrete structure. Spherical ball bushings at the top and bottom of each of column allow unrestrained lateral movement of the SG during heatup and cooldown.

(2) Horizontal Supports

Horizontal supports restrain the SGs at two levels:

(a) At elevation 140 feet, where the reinforced concrete slab acts as a rigid diaphragm supporting horizontal forces (predominantly seismic) generated at this level.

(b) At elevation 111 feet (the channel head), where support pads are provided on the SG.

The horizontal supports permit slow radial movement due to thermal expansion while maintaining a positive restraint against sudden loads such as an earthquake or pipe rupture. This is accomplished through the use of four hydraulic snubbers that have a normal/upset allowable load rating of 1450 kips each at elevation 140 feet attached to a ring shimmed to the SG at 20 locations around the circumference. The faulted allowable snubber load is 2050 kips.

The support pads at elevation 111 feet are keyed and shimmed to a sliding frame that is sandwiched between two rigid stationary frames anchored to massive concrete walls. The sliding frame is provided with a bumper system to transfer load to the stationary frames. The frame system for each of two sets of SGs is interconnected so that pipe rupture loads in one loop are distributed between two frame systems.

5.5.13.2.3 Reactor Coolant Pump Supports

The RCPs are supported on structural steel frames restrained horizontally at elevation 106 feet 5-1/2 inches by a system of steel struts anchored to rigid concrete walls as shown in Figures 5.5-10 and 5.5-11. Thermal expansion is permitted by low friction support pads and oversized mounting holes. The support pads are keyed and shimmed to the frame. This support system resists vertical and lateral loads due to all plant operating conditions.

5.5.13.2.4 Pressurizer Support

The pressurizer is bolted to a structural steel frame, providing vertical and lateral support at its base at elevation 113 feet 2 inches as shown in Figure 5.5-12. Additional lateral support is provided by rigid guides embedded in the concrete slab near the CG of the vessel at elevation 139 feet, in conjunction with lugs projecting from the vessel shell. The upper support allows the pressurizer to expand radially and vertically, but resists torsional and translational horizontal movements.

5.5.13.2.5 Crossover Pipe Restraint

The crossover leg is restrained at elevation 96 feet by a system of two sets of steel bumpers located at the elbows of the pipe as shown in Figure 5.5-10. Each set consists of a bumper strapped to the pipe, which bears on a rigid bumper anchored to a concrete pad at elevation 94 feet. The restraint resists blowdown loads from a rupture of the crossover pipe. The crossover pipe restraints were deactivated by removing shims. The bumpers strapped to the pipe and the rigid bumpers were left intact and are abandoned in place.

5.5.13.3 Design Evaluation

Detailed evaluation ensures the design adequacy and structural integrity of the RCL and the primary equipment supports system. The detailed evaluation is made by comparing the analytical results with established criteria for acceptability. Structural analyses are performed to demonstrate design adequacy for safety and reliability of the plant in case of a large or small seismic disturbance and/or LOCA conditions. Loads (thermal, weight and pressure) that the system is expected to encounter often during its lifetime are applied and stresses are compared to allowable values, as described in Section 5.2.2.1. The stress limits for component supports are provided in Tables 5.2-8 and 5.2-8a.

5.5.14 REACTOR VESSEL HEAD VENT SYSTEM

5.5.14.1 Design Bases

The basic function of the RVHVS is to remove noncondensable gases from the RVCH. This system is designed to mitigate a possible condition of inadequate core cooling or impaired natural circulation resulting from the accumulation of noncondensable gases in the RCS. The design of the RVHVS is in accordance with the requirements of NUREG-0578, July 1979 (Reference 7) and the subsequent definitions and clarifications in NUREG-0737, November 1980 (Reference 8) (refer to Section 5.1.8.26, Item II.B.1).

5.5.14.2 Design Description

The RVHVS removes noncondensable gases or steam from the RCS via remote-manual operations from the control room. The system discharges at the RVCH, into a well-ventilated area of the containment, to ensure optimum dilution of combustible

gases. The RVHVS is designed to vent a volume of hydrogen at system design pressure and temperature approximately equivalent to one-half of the RCS volume in 1 hour.

The flow diagram of the RVHVS is shown in Figure 5.5-14. The RVHVS consists of two parallel flowpaths with redundant isolation valves in each flowpath. The venting operation uses only one of these flowpaths at any time. Equipment design parameters are listed in Table 5.5-17. Isolation valve limit switch position indication is provided in the control room.

The active portion of the system consists of four 1 inch open/close solenoid operated isolation valves connected to a dedicated RVCH penetration, located near the center of the RVCH. The use of two valves in series in each flowpath minimizes the possibility of RCPB leakage. The isolation valves in one flowpath are powered by one Class 1E power supply, and the valves in the second flowpath are powered by a second Class 1E power supply. The isolation valves are fail closed, normally closed, active valves. Device qualification is described in Sections 3.10 and 3.11.

If one single active failure prevents a venting operation through one flowpath, the redundant path is available for venting. Similarly, the two isolation valves in each flowpath provide a single failure method of isolating the venting system. With two valves in series, the failure of any one valve or power supply will not inadvertently open a vent path. These valves are energized-to-open, spring-to-close. Thus, the combination of PG&E Design Class I train assignments and valve failure modes will not prevent vessel head venting or venting isolation with any single active failure.

The RVHVS has two normally deenergized valves in series in each flowpath. This arrangement eliminates the possibility of a spuriously opened flowpath due to the spurious movement of one valve. As such, power lockout to any valve is not considered necessary.

The RVHVS is connected to a RVCH vent nozzle penetration. The reactor vent piping utilizes a 3/8-inch orifice prior to branching into two redundant flowpaths. The system is designed to limit the blowdown from a break downstream of the orifices such that loss through a severance of one of these lines is sufficiently small to allow operators to execute an orderly plant shutdown.

A break of the RVHVS line upstream of the orifices would result in an SBLOCA of not greater than 1 inch diameter. Such a break is similar to those analyzed in Reference 2. Since a break in the head vent line would behave similarly to the hot leg break case presented in Reference 2, the results presented therein are applicable to a RVHVS line break. This postulated vent line break results, therefore, in no calculated core uncovery.

All piping and equipment from the RVHVS nozzle to the second isolation valve are designed and fabricated in accordance with ASME BPVC Section III-2001 through 2003 Addenda, Class 1 requirements. The remainder of the piping is PG&E Design Class II.

5.5.14.3 Supports

The RVHVS piping is supported to ensure that the resulting loads and stresses on the piping and on the vent connection to the housing are acceptable. All supports and support structures comply with the requirements of the ASME BPVC Section III-2001 through 2003 Addenda, Subsection NF.

5.5.15 REFERENCES

1. IEEE-Std-279, Criteria for Protection Systems for Nuclear Power Generating Station, 1971.

2. Report on Small Break Accidents for Westinghouse NSSS System, WCAP-9600, June 1979.

3. Deleted in Revision 18.

4. Deleted in Revision 19.

5. NEI 97-06, Steam Generator Program Guidelines, latest revision.

6. Technical Specifications, Diablo Canyon Power Plant Units 1 and 2, Appendix A to License Nos. DPR-80 and DPR-82, as amended.

7. Nuclear Regulatory Commission, TMI Short-Term Lessons Learned Requirements, NUREG-0578, July 1979.

8. Nuclear Regulatory Commission, Clarification of TMI Plan Requirements, NUREG-0737, November 1980.

9. Deleted in Revision 19.

10. Letter from Sheri R. Peterson (NRC) to Gregory M. Rueger (PG&E), “Leak-Before-Break Evaluation of Reactor Coolant System Piping for DCPP Units 1 and 2,” March 2, 1993,

11. Deleted in Revision 19.

12. Westinghouse Calculation SE/FSE-C-PGE-0013, “RHRS Cooldown Performance at Uprated Conditions,” June 5, 1996.

13. Toby Burnett, et al., Systems Evaluation for Reactor Flange Venting for the Diablo Canyon Power Plant, Westinghouse Technical Report, August 1992.

14. E. R. Frantz, et al., RCS Pressurization Analysis for Diablo Canyon Shutdown Scenarios, Westinghouse Technical Report, April 3, 1997.

5.5.16 REFERENCE DRAWINGS

Figures representing controlled engineering drawings are incorporated by reference and are identified in Table 1.6-1. The contents of the drawings are controlled by DCPP procedures.

5.6 INSTRUMENTATION REQUIREMENTS

5.6.1 REACTOR COOLANT SYSTEM

The RPV, pressurizer, and each of the RCLs are monitored by process control instrumentation. This instrumentation provides the input signals to the following control, display, and protection functions that are described in Chapter 7:

(1) Reactor trip (Section 7.2)

- (a) RCS temperatures (overtemperature ΔT, overpower ΔT)
- (b) Pressurizer pressure (low and high pressure trips)
- (c) Pressurizer level
- (d) RCS flow
- (e) RCP breaker position

(2) Engineered safety features actuation (Section 7.3)

- (a) Pressurizer pressure

(3) PG&E Design Class I functions for safe shutdown (Section 7.4)

- (a) Decay heat removal (RCS loop temperatures)
- (b) RCS pressure control (pressurizer level and pressure)

(4) PG&E Design Class I display information (Section 7.5)

- (a) RCS temperatures
- (b) Pressurizer level
- (c) Pressurizer pressure
- (d) RCS pressure
- (e) RCS flow
- (f) RCP motor amps
- (g) PSV position
- (h) PORV position
- (i) RPV level
- (j) Subcooling margin
- (k) Incore temperatures

(5) Other safety features (Section 7.6)

- (a) RCS pressure (RHR valve interlock)
- (b) Pressurizer temperature (RHR valve interlock)

(6) Control systems not required for safety (Section 7.7)

(a) Reactor control system (T_{avg} control)
(b) Plant control system interlocks (overtemperature turbine runback)
(c) Pressurizer pressure control
(d) Pressurizer level control
(e) Steam dump control (T_{avg} based)
(f) Incore temperatures

Refer to Section 5.5.1.2 for a discussion of RCP vibration monitoring.

The RCS design and operating pressure together with the PSV, PORV, and pressurizer spray valves nominal setpoints, and the protection system nominal setpoint pressures are listed in Table 5.2-10. The design pressure allows for operating transient pressure changes. The selected design margin considers core thermal lag, coolant transport times and pressure drops, instrumentation and control response characteristics, and system relief valve characteristics.

5.6.1.1 Inadequate Core Cooling Instrumentation

To meet the requirements for supplementing existing instrumentation to unambiguously indicate inadequate core cooling (refer to Sections 5.1.1.26 and 5.1.8.26, Item II.F.2), a subcooling meter and a reactor vessel water level measurement are provided. Inadequate core cooling detection instrumentation is discussed in more detail in Section 7.5.2.2. The subcooling meters are a subset of RVLIS and provide the operator with on-line indication of the core coolant temperature and pressure margins to saturation conditions. The reactor vessel water level is determined by the reactor vessel head level system by measuring the pressure drop between the upper and lower plena in the vessel.

Each subcooling meter (train A or B) has wide range temperature inputs from two each of the RCS hot legs and the hottest incore thermocouple associated with that train. Two pressure measurements (one per train) are input from the hot legs. The subcooling meter displays consist of a digital meter on the main control board (train B), a recorder to provide a redundant display (train A/PAM1), and the indication on each RVLIS display (PAM3 and PAM4). All the indications provide the temperature margin to saturation of the RCS. In addition to temperature margin, the RVLIS displays also provide the pressure margin.

The reactor vessel level measurement is used in combination with the existing core exit thermocouples and the subcooling meter. Differential pressure between the top of the reactor vessel and the bottom of the reactor vessel on two narrow-range and two wide-range instruments is measured. The system functions as follows: with the RCPs off, the pressure drop between the top and the bottom of the vessel indicates the collapsed liquid level (the equivalent liquid level without voids in the two-phase region) in the vessel. This is read on the narrow-range instrument in terms of feet of liquid. With the RCPs running, the pressure drop (in feet of liquid) from the top to the bottom of

the vessel when compared to the measurement with the same combination of running pumps during normal, single phase RCS condition, provides an approximate indication of the void fraction in the vessel. This is read on the wide-range instrument as percent of full flow differential pressure with the vessel filled with water.

5.6.1.2 Loose Parts Monitoring

A loose parts and vibration monitoring system is provided for early detection of possible loose parts in the RCS and to reduce their probability of causing damage to RCS components.

Accelerometers (piezoelectric crystals) are located in areas where loose parts are most likely to become entrapped. Redundant accelerometers are installed on the top and the bottom of the RPV and on the lower head of each of the four SGs. Signals from the accelerometers are transmitted by high-temperature leads to preamplifiers located in the containment. From the preamplifiers, the signals are sent to the data acquisition and control panel located in the control room. All components are designed to remain operational over the life of the plant in the temperature, humidity, and radiation environment in which they are installed.

When the output of an individual transducer channel exceeds an adjustable setpoint:

(1) The condition activates a local alarm at the control cabinet.

(2) The output of the alarmed channel is evaluated for validity and logged before being transmitted to the main control board annunciator.

The output of the transducers can be audiomonitored by the operator at the control panel. The alarm monitoring of the selected channel continues during audiomonitoring.

In the event that the output of a loose part channel exceeds the alarm value, the record of the event will be available to the operator and plant staff for analysis. The event will be compared with other previously recorded signatures of the RCS. If necessary, consultants will be contacted to further evaluate the event. This analysis, together with other plant instrumentation, will form the basis for judgment of the effects and significance of the loose parts event.

The sensitivity of the loose parts channels is such that a loose part striking the RPV or SGs with as little as one-half-foot-pound of energy produces signals of sufficient strength to be detected over the normal background signals.

5.6.2 RESIDUAL HEAT REMOVAL SYSTEM

Process control instrumentation for the RHR system is provided for the following purposes:

(1) Furnish input signals for monitoring and/or alarming purposes for:

(a) Temperature indications
(b) Pressure indications
(c) Flow indications

(2) Furnish input signals for control purposes of such processes as follows:

(a) Control valve in the RHR pump bypass line so that it opens at flows below a preset limit and closes at flows above a preset limit
(b) RHR isolation valves control circuitry (refer to Section 7.6 for the description of the interlocks)
(c) Control valve in the RHR heat exchanger bypass line to control temperature of reactor coolant returning to reactor loops during plant cooldown
(d) RHR pump circuitry for starting RHR pumps on "S" signal
(e) RHR pump trip on low RWST level

5.6.3 REFERENCES

1. Deleted in Revision 22.

TABLE 5.0-1

APPLICABLE DESIGN BASIS CRITERIA

CRITERIA	TITLE	APPLICABILITY	
Reactor Coolant System		Reactor Coolant System	Reactor Coolant Pressure Boundary
Section		5.1	5.2
1. General Design Criteria			
Criterion 2, 1967	Performance Standards	X	X
Criterion 3, 1971	Fire Protection	X	
Criterion 4, 1967	Sharing of Systems	X	
Criterion 4, 1987	Environmental and Dynamic Effects Design Bases	X	X
Criterion 6, 1967	Reactor Core Design	X	
Criterion 9, 1967	Reactor Coolant Pressure Boundary	X	X
Criterion 11, 1967	Control Room	X	X
Criterion 12, 1967	Instrumentation and Controls	X	X
Criterion 13, 1967	Fission Process Monitors and Controls	X	
Criterion 15, 1967	Engineered Safety Features Protection Systems	X	
Criterion 16, 1967	Monitoring Reactor Coolant Pressure Boundary		X
Criterion 21, 1967	Single Failure Definition	X	
Criterion 33, 1967	Reactor Coolant Pressure Boundary Capability		X
Criterion 34, 1967	Reactor Coolant Pressure Boundary Rapid Propagation Failure Prevention		X
Criterion 35, 1967	Reactor Coolant Pressure Boundary Brittle Fracture Prevention		X
Criterion 36, 1967	Reactor Coolant Pressure Boundary Surveillance		X
Criterion 40, 1967	Missile Protection	X	
Criterion 49, 1967	Containment Design Basis	X	
Criterion 51, 1967	Reactor Coolant Pressure Boundary Outside Containment		X
Criterion 54, 1971	Piping Systems Penetrating Containment	X	
Criterion 55, 1971	Reactor Coolant Pressure Boundary Penetrating Containment	X	
Criterion 56, 1971	Primary Containment Isolation	X	

TABLE 5.0-1

APPLICABLE DESIGN BASIS CRITERIA

CRITERIA	TITLE	APPLICABILITY	
Reactor Coolant System		Reactor Coolant System	Reactor Coolant Pressure Boundary
Section		5.1	5.2
2. System Safety Functional Requirements			
Protection from Missiles and Dynamic Effects		X	X
Reactor Heat Removal		X	
RCS Thermal-Hydraulic Requirements		X	
RCS Coolant Functional Properties		X	
RCS Pressure and Volume Control		X	
Steam Flow Restriction		X	
RCP Coastdown		X	
Pressurizer Relief Tank		X	
3. 10 CFR Part 50			
50.48(c)	National Fire Protection Association Standard NFPS 805	X	
50.49	Environmental Qualification of Electric Equipment Important to Safety for Nuclear Power Plants	X	
50.55a	Codes and Standards		X
50.55a(f)	Inservice Testing Requirements	X	X
50.55a(g)	Inservice Inspection Requirements	X	X
50.60	Acceptance Criteria for Fracture Prevention Measures for Lightwater Nuclear Power Reactors for Normal Operation		X
50.61	Fracture Toughness Requirements for Protection against Pressurized Thermal Shock Events		X
50.63	Loss of All Alternating Current Power	X	
Appendix G	Fracture Toughness Requirements		X
Appendix H	Reactor Vessel Material Surveillance Program Requirements		X

TABLE 5.0-1

APPLICABLE DESIGN BASIS CRITERIA

CRITERIA	TITLE	APPLICABILITY	
Reactor Coolant System		Reactor Coolant System	Reactor Coolant Pressure Boundary
Section		5.1	5.2
4. Regulatory Guides			
Safety Guide 14, October 1971	Reactor Coolant Pump Flywheel Integrity		X
Regulatory Guide 1.14, Revision 1, August 1975	Reactor Coolant Pump Flywheel Integrity		X
Regulatory Guide 1.44, May 1973	Control of the Use of Sensitized Stainless Steel		X
Regulatory Guide 1.45, May 1973	Reactor Coolant Pressure Boundary Leakage Detection Systems		X
Regulatory Guide 1.89, November 1974	Environmental Qualification of Class 1E Equipment for Nuclear Power Plants	X	
Regulatory Guide 1.97, Revision 3, May 1983	Instrumentation for Light-Water-Cooled Nuclear Power Plants to Assess Plant and Environs Conditions During and Following an Accident	X	X
Regulatory Guide 1.99, Revision 2, May 1988	Radiation Embrittlement of Reactor Vessel Materials		X
Regulatory Guide 1.121, August 1976	Bases for Plugging Degraded PWR Steam Generator Tubes	X	
5. NRC NUREG			
NUREG-0737, November 1980	Clarification of TMI Action Plan Requirements	X	X
6. NRC Generic Letters			
Generic Letter 83-37, November 1983	NUREG-0737 Technical Specifications	X	
Generic Letter 88-05, March 1988	Boric Acid Corrosion of Carbon Steel Reactor Pressure Boundary Components in PWR Plants	X	
Generic Letter 89-10, June 1989	Safety-Related Motor-Operated Valve Testing and Surveillance		X

TABLE 5.0-1

APPLICABLE DESIGN BASIS CRITERIA

CRITERIA	TITLE	APPLICABILITY	
Reactor Coolant System		Reactor Coolant System	Reactor Coolant Pressure Boundary
Section		5.1	5.2
Generic Letter 90-06, June 1990	Resolution of Generic Issue 70, "Power-Operated Relief Valve and Block Valve Reliability" and Generic Issue 94, "Additional Low-Temperature Over Pressure Protection for Light-Water Reactors" Pursuant to 10 CFR 50.54(f)	X	X
Generic Letter 95-07, August 1995	Pressure Locking and Thermal Binding of Safety-Related Power-Operated Valves	X	
7. NRC Bulletins			
NRC Bulletin 88-09, July 1988	Thimble Tube Thinning in Westinghouse Reactors	X	
NRC Bulletin 88-11, December 1988	Pressurizer Surge Line Thermal Stratification	X	
8. Branch Technical Position			
Branch Technical Position ASB 10-2, March 1978	Design Guidelines for Avoiding Water Hammers in Steam Generators	X	

TABLE 5.1-1

SYSTEM DESIGN AND OPERATING PARAMETERS[c]

	Unit 1	Unit 2
Plant design life, years[a]	50	50
Nominal operating pressure, psig	2,235	2,235
Total system volume, including pressurizer and surge line, ft^3	12,064 +/- 100	12,169 +/- 100
System liquid volume, including pressurizer water, ft^3 (nominal)	11,082 - 11,337[f]	11,187 - 11,448[d]
Total heat output , Btu/hr	11,687 $x10^6$	11,687x 10^6
System thermal and hydraulic data [f]		
Minimum Measured Flow (RCS total flow), gpm	359,200	362,500
Core Bypass Flow, %	7.5	9.0
Mechanical Design Flow (MDF), gpm/loop	99,600	102,000
Thermal Design Flow, lb/hr	132.9 x 10^6 – 135.1 x 10^6 [f]	134.0 x 10^6 – 136.3 x 10^6 [d]
Reactor vessel		
Inlet temp, °F	531.7 - 544.5[f]	531.9 - 545.1[d]
Outlet temp, °F	598.3 - 610.1[f]	598.1 - 610.1[d]
Steam generator		
Inlet temp, °F	598.3 - 610.1[f]	598.1 - 610.1[d]
Outlet temp, °F	531.4 - 544.2[f]	531.6 - 544.8[d]
Design Fouling Factor, hr-ft^2-°F/BTU	0.00018	0.00018
Reactor coolant pump		
Inlet temp, °F	531.4 - 544.2[f]	531.6 - 544.8[d]
Outlet temp, °F	531.7 - 544.5[f]	531.9 - 545.1[d]
Steam pressure, psia	730 - 821[f] [g]	731 - 825[d] [h]

TABLE 5.1-1

Steam flow, lb/hr (total)	14.64×10^6 – 14.89×10^6 (f)(g)	14.64×10^6 - 14.90×10^6 (d) (h)
Feedwater inlet temp, °F	425.0 - 435.0	425.0 - 435.0
Pressurizer spray rate, maximum, gpm	800	800
Pressurizer heater capacity, kW(b)	1800	1800
Pressurizer relief tank volume, ft^3	1800	1800
Best Estimate Operating Data(c)		
NSSS Power, MWt	3425	3425
(a) Primary System Flows and ΔP(e):		
Reactor Vessel Avg. Temp., °F	565.0	565.0
RCS Flow, gpm/loop	94,900	95,500
Reactor Coolant Pump developed head, ft	282.3	266.6
Component ΔP, psia		
Reactor Vessel ΔP, psi	48.2	42.46
Steam Generator ΔP, psi	38.5	38.9
RCS Piping ΔP, psi	7.2	7.3
(b) Secondary Side Performance Parameters:		
Reactor Vessel Avg. Temp., °F	577.3	577.6
RCS Flow, gpm/loop	94,900	95,500
Steam Generators		
Steam pressure, psia	874	878
Steam flow, lb/hr x 10^6	14.920	14.924
Best Estimate Fouling Factor, hr-ft^2-°F/BTU	0.00006	0.00006

(a) Although DCPP useful life is expected to be 40 years, the RCS design conservatively assumes that integrity must be maintained during 50 years.
(b) See Table 5.5-12.
(c) 0% SGTP, NSSS rated power
(d) Design value corresponding to full power, 565.0 - 577.6°F vessel average temperature.
(e) Best Estimate calculations were performed to maximize Best Estimate Flow and system/component pressure drops.
(f) Design value corresponding to full power, 565.0 - 577.3°F vessel average coolant temperature.
(g) If a high steam pressure is more limiting for analysis purposes, a greater steam pressure of 881 psia, steam temperature of 529.4°F, and steam flow of 14.93×10^6 lb/hr total should be assumed for Unit 1. This is to envelop the possibility that the plant could operate with better than expected steam generator performance.
(h) If a high steam pressure is more limiting for analysis purposes, a greater steam pressure of 885 psia, steam temperature of 530.0°F, and steam flow of 14.93×10^6 lb/hr total should be assumed for Unit 2. This is to envelop the possibility that the plant could operate with better than expected steam generator performance.

TABLE 5.2-1

ASME CODE CASES
FOR WESTINGHOUSE PWR CLASS A COMPONENTS

HISTORICAL INFORMATION IN ITALICS BELOW NOT REQUIRED TO BE REVISED

Code Case[b]	*Title*
1141	*Foreign Produced Steel*
1332	*Requirements for Steel Forgings*
1334	*Requirements for Corrosion Resistant Steel Bars*
1335	*Requirements for Bolting Material*
1337	*Requirements for Special Type 403 Modified Forgings or Bars (Section III)*
1344	*Requirements for Nickel-Chromium Age-Hardenable Alloys*
1345	*Requirements for Nickel-Molybdenum-Chromium-Iron Alloys*
1355	*Electroslag Welding*
1358[a]	*High Yield Strength Steel for Section III Construction*
1360[a]	*Explosive Welding*
1361	*Socket Welds*
1364	*Ultrasonic Transducers SA-435 (Section II)*
1384	*Requirements for Precipitation Hardening Alloy Bars & Forgings*
1388	*Requirements for Stainless Steel – Precipitation Hardening*
1390	*Requirements for Nickel-Chromium Age-Hardenable Alloys for Bolting*
1395	*SA-508, Class 2 Forgings – Modified Manganese Content*
1401	*Welding Repair to Cladding*
1407	*Time of Examination*
1412[a]	*Modified High Yield Strength Steel*
1414[a]	*High Yield Strength Cr-Mo*
1423	*Plate: Wrought Type 304 with Nitrogen Added*
1433	*Forgings: SA-387*
1434	*Class BN Steel Casting (Postweld Heat Treatment for SA-487)*
1448	*Use of Case Interpretations of ANSI B31 Code for Pressure Piping*
1456	*Substitution of Ultrasonic Examination*
1459	*Welding Repairs to Base Metal*
1461	*Electron Beam Welding*
1470	*External Pressure Charts for Low Alloy Steel*
1471	*Vacuum Electron Beam Welding of Tube Sheet Joints*
1474	*Integrally Finned Tubes (Section III)*
1477	*B-31.7, ANSI 1970 Addenda*
N-20-4	*SB-163 Nickel-Chromium-Iron Tubing at a Specified Minimum Yield Strength of 40,000 psi*
1487	*Evaluation of Nuclear Piping for Faulted Conditions*
1492	*Postweld Heat Treatment*
1493	*Postweld Heat Treatment*
1494	*Weld Procedure Qualification Test*
1498	*SA-508, Class 2, Minimum Tempering Temperature*
1501	*Use of SA-453 Bolts in Service Below 800 degrees F without Stress Rupture Tests*
1504	*Electrical and Mechanical Penetration Assemblies*
1505[a]	*Use of 26 Cr, 1 Mo Steel*
1508	*Allowable Stresses, Design Stress Intensity and/or Yield Strength Values*
1514	*Fracture Toughness Requirements*
1515	*Ultrasonic Examination of Ring Forgings for Shell Section of Section III – Class I Vessels*
1516	*Welding of Non-Integral Seats in Valves for Section III Application*
1517	*Material Used in Pipe Fittings*
1519	*Use of A-105-71 in lieu of SA-105*
1521	*Use of H. Grades SA-240, SA-479, SA-336, and SA-358*

TABLE 5.2-1

Code Case[b]	*Title*
1522	*ASTM Material Specifications*
1523	*Plate Steel Refined by Electroslag Remelting*
1524	*Piping 2" NPS and Smaller*
1525	*Pipe Descaled by Other Than Pickling*
1526	*Elimination of Surface Defects*
1527	*Integrally Finned Tubes*
1528	*High Strength SA-508 Class 2 and SA-541 Class 2 Forgings for Section III Construction of Class I Components*
1529	*Material for Instrument Line Fittings*
1531	*Electrical Penetrations, Special Alloys for Electrical Penetrations Seals*
1534	*Overpressurization of Valves*
1535	*Hydrostatic Test of Class I Nuclear Valves*
1539	*Metal Bellows and Metal Diaphragm Steam Sealed Valves, Class 1, 2, and 3*
1542	*Requirements for Type 403 Modified Forgings of Bars for Bolting Material*
1544	*Radiographic Acceptance Standards for Repair Welds*
1545	*Test Specimens from Separate Forgings for Class 1, 2, 3, and MC.*
1546	*Fracture Toughness Test for Weld Metal Section*
1547	*Weld Procedure Qualification Tests; Impact Testing Requirements, Class I*
1522	*Design by Analysis of Section III Class I Valves*
1556[a]	*Penetrameters for Film Side Radiographs in Table T-320 of Section V*
1567	*Test Lots for Low Alloy Steel Electrodes*
1568	*Test Lots for Low Alloy Steel Electrodes*
1571	*Materials for Instrument Line Fittings; For SA-234 Carbon Steel Fittings*
1573	*Vacuum Relief Valves*
1574	*Hydrostatic Test Pressure for Safety Relief Valves*

(a) Westinghouse has performed a review of these specific code cases and knows of no specific application made to components for Diablo Canyon Units 1 and 2.

(b) Code cases adopted for use at DCPP are specified in the introduction to the Inservice Inspection Program Plan.

TABLE 5.2-2

EQUIPMENT CODE AND CLASSIFICATION LIST

Component	Code Class[d]	Unit 1 Code	Unit 1 Addenda	Unit 2 Code	Unit 2 Addenda
Reactor Coolant System					
Reactor vessel	A	ASME III 1965	thru Winter 1966	ASME III 1968	none
Reactor vessel closure head	A	ASME III 2001	thru 2003	ASME III 2001	thru 2003
Control rod drive mechanism housing	A	ASME III 2001	thru 2003	ASME III 2001	thru 2003
Steam generator (primary side pressure boundary)	A	ASME III 1998	thru 2000	ASME III 1998	thru 2000
(secondary side pressure boundary)	B[a]	ASME III 1998	thru 2000	ASME III 1998	thru 2000
Pressurizer	A	ASME III 1965	thru Summer 1966	ASME III 1965	thru Summer 1966
Reactor coolant piping[b][c], fittings	N/A	ASA B31.1 1955	none	USAS B31.1.0 1967	none
Surge pipe, fittings	N/A	ASA B31.1 1955	none	USAS B31.1.0 1967	none
Reactor coolant thermowells	N/A	ASA B31.1	none	ASA B31.1	none
Safety valves	N/A	ASME III 1968	Article 9	ASME III 1968	Article 9
Relief valves	N/A	USAS B16.5	none	USAS B16.5	none
Valves to reactor coolant system boundary	N/A	USAS B16.5 or MSS-SP-66 or ASME III 1968 or 1974[e]	None	USAS B16.5 or MSS-SP-66 or ASME III 1968 or 1974[e]	None
Piping to reactor coolant system boundary	A	ANSI B31.7 1969	1970	ANSI B31.7 1969	1970
Pressurizer relief tank	C	ASME III 1968	thru Summer 1968	ASME III 1968	thru Summer 1968
Reactor coolant pump standpipe orifice	N/A	No Code		No Code	
Reactor coolant pump standpipe	N/A	ASME VIII 1968	None	ASME VIII 1968	None

TABLE 5.2-2

Component	Code Class[d]	Unit 1 Code	Unit 1 Addenda	Unit 2 Code	Unit 2 Addenda
Reactor coolant pump[f][g]					
Casing	A	ASME III 1965	thru Summer 1966	ASME III 1968	thru Winter 1970
Main flange	A	ASME III 1965	thru Summer 1966	ASME III 1968	thru Winter 1970
Thermal barrier	A	ASME III 1965	thru Summer 1966	ASME III 1968	thru Winter 1970
#1 seal housing	A	ASME III 1965	thru Summer 1966	ASME III 1968	thru Winter 1970
#2 seal housing	A	ASME III 1965	thru Summer 1966	ASME III 1968	thru Winter 1970
Pressure retaining bolting	A	ASME III 1965	thru Summer 1966	ASME III 1968	thru Winter 1970
Remaining parts	N/A	ASME III 1965	thru Summer 1966	ASME III 1968	thru Winter 1970
Reactor coolant pump motor oil coolers	N/A	No Code			

(a) Code design requirements are in excess of the requirement dictated by the applicable safety class.

(b) Reactor coolant system piping subassemblies inspected to ASME I as required by California law.

(c) Classification for other piping and associated valves in the reactor coolant system boundary shall be as defined by the systems engineering flow diagrams for the appropriate safety class.

(d) ASME Code Classes A, B, and C were re-designated 1, 2 and 3 in Editions starting in 1971. Refer to Chapter 3.

(e) A small number of valves was purchased to ASME Section III, 1974 requirements.

(f) Originally supplied Unit 1 RCP stress limits and analysis based on ASME III 1968 Edition thru Winter 1970 Addenda.

(g) Originally supplied Unit 1 RCPs are not ASME Code N-Symbol stamped.

TABLE 5.2-3

PROCUREMENT INFORMATION
COMPONENTS WITHIN REACTOR COOLANT SYSTEM BOUNDARY

Component	Purchase Order Dates	
	Unit 1	Unit 2
Reactor vessel	3/27/67	12/27/68
Replacement RVCH	7/28/06	7/28/06
CRDM housing	7/28/06	7/28/06
Original steam generator	11/22/66	4/6/67
Replacement steam generator	8/12/04	8/12/04
Pressurizer	4/24/67	4/24/67
Reactor coolant pump	3/29/67	3/29/67
Reactor coolant pipe, fittings, and fabrication	5/2/67[a] 1/16/68[b]	10/7/68[a] 11/20/69[b]
Surge pipe, fittings, and fabrication	5/2/67[a]	10/7/68[a]
Piping to reactor coolant system boundary fabrication and installation	5/25/70	5/25/70

(a) Purchase of pipe.
(b) Fabrication of pipe.

TABLE 5.2-4

SUMMARY OF REACTOR COOLANT SYSTEM DESIGN TRANSIENTS

Normal Conditions	Occurrences
1. RCS heatup and cooldown at ≤ 100°F/hr	250 (each)[e]
2. Unit loading and unloading at 5% of full power/min	18,300 (each)
3. Step load increase and decrease of 10% of full power	2,500 (each)
4. Large step load decrease	250
5. Steady state fluctuations	infinite
Upset Conditions	
1. Loss of load (above 15% full power), without immediate turbine or reactor trip	100[e]
2. Loss of all offsite power	50[e]
3. Partial loss of flow	100[e]
4. Reactor trip from full power	500[e]
5. Inadvertent auxiliary spray (differential temperature > 320°F	12[e]
6. Design earthquake	20
7. Cold Overpressurization (LTOP)	10
Faulted Conditions[a]	
1. RCPB pipe break[d]	1
2. Steam line break	1
3. Double design earthquake[b]	1
4. 7.5M Hosgri earthquake[b]	1
Test Conditions	
1. Turbine roll test	10[e]
2. Hydrostatic test conditions	
a. Primary side	10[e]
b. Secondary side	10[e]
3. Leak tests (for closures)	
a. Primary side	60[e]
b. Secondary side	10
4. Tube leak tests (secondary side pressurized as follows)	
200 psig	400
400 psig	200
600 psig	120
840 psig	80

Component Specific Analysis[g]

Normal Conditions	Occurrences
1. Pressurizer heatup at ≤ 100°F/hr and cooldown at ≤ 200°F/hr	250
2. Steam Generator hot standby operation/feedwater cycling (f)	18,300
3. Pressurizer boron concentration equalization	32,000

TABLE 5.2-4

(a) In accordance with the ASME Boiler and Pressure Vessel Code, faulted conditions are not included in fatigue evaluations.
(b) See Section 3.7.
(c) Deleted in Revision 22.
(d) With the acceptance of the DCPP leak-before-break analysis by the NRC, dynamic loading conditions resulting from pipe rupture events in the main reactor coolant loop piping no longer have to be considered in the design basis analyses; only the loads resulting from RCS branch line breaks have to be considered.
(e) These limits were contained in Technical Specifications (Table 5.7-1) prior to License Amendment 135 (Improved Technical Specifications)
(f) Applies to steam generator only.
(g) These transients apply to the specific component listed, and are provided to clarify the applicable transient. The number of occurrences represents the applicable number of cycles for the component, consistent with the occurrences identified at the system level. These are not in addition to the number of occurrences identified at the system level.

TABLE 5.2-5

STRESS LIMITS FOR PG&E QUALITY/CODE CLASS I LOOP PIPING AND VALVES

Condition / Loading Combinations	Loop Piping[a) (f)]	Valves
1. Normal		
(Deadweight + Pressure)	$\sigma \leq S_h$	See Section 3.9.2
(Thermal)	$\sigma \leq S_a$	See Section 3.9.2
2. Upset (Normal ± DE loads)	$\sigma \leq 1.2\ S_h$	See Section 3.9.2
3. Faulted – 1 (Deadweight +Pressure ± DDE)	$\sigma \leq 1.8\ S_h$[b)]	See Section 3.9.2
4. Faulted – 2 (Deadweight + Pressure ± DDE/Hosgri[c)] + LOCA[d)])	$\sigma \leq 3.6\ S_h$[b)]	See Section 3.9.2
5. Faulted – 3 (Deadweight + Pressure ± Hosgri)	$\sigma \leq 2.4\ S_h$[b)]	See Section 3.9.2
6. Faulted – 4 (Deadweight + Pressure ± DDE/Hosgri[c)] + Other Pipe Rupture[e)])	$\sigma \leq 3.6\ S_h$[b)]	See Section 3.9.2

(a) S_h = allowable stress from B31.1 Code for power piping
$S_a = 1.25\ S_c + 0.25\ S_h$

TABLE 5.2-5

STRESS LIMITS FOR PG&E QUALITY/CODE CLASS I LOOP PIPING AND VALVES

S_c = allowable stress at cold (ambient) temperature
σ = piping stress calculated per B31.1 Code requirements.

(b) See Table 5.2-7 for additional faulted condition stress limits for loop piping.

(c) The more limiting between the DDE loads and the Hosgri loads.

(d) Loss of Coolant Accident (LOCA) Loads – The original stress analysis considered main coolant pipe ruptures. With the acceptance of DCPP leak-before-break analysis by the NRC, only the loads resulting from branch line breaks are considered.

(e) Main steam line or feedwater line rupture.

(f) Loop piping and branch lines ≥ 6 inch diameter.

TABLE 5.2-6

LOAD COMBINATIONS AND STRESS CRITERIA FOR PRIMARY EQUIPMENT [a]

CONDITION	LOAD COMBINATION	STRESS CRITERIA[e][j]
Design	Deadweight + Pressure ± DE	$P_m \leq S_m$ $P_L + P_b \leq 1.5\ S_m$
Normal	Deadweight + Pressure + Thermal	$P_L + P_b + P_e + Q \leq 3\ S_m$[b]
Upset - 1	Deadweight + Pressure + Thermal ± DE	$U_T \leq 1.0$[b] $P_L + P_b + P_e + Q \leq 3\ S_m$[b]
Upset - 2	Deadweight + Pressure + Thermal	$U_T \leq 1.0$[b] $P_L + P_b + P_e + Q \leq 3\ S_m$[b]
Faulted - 1	Deadweight + Pressure ± DDE	Table 5.2-7[k]
Faulted - 2	Deadweight + Pressure ± (DDE or Hosgri[d,h])+LOCA[d, g]	Table 5.2-7
Faulted - 3	Deadweight + Pressure ± Hosgri	Table 5.2-7
Faulted - 4	Deadweight + Pressure ± DDE or Hosgri[h] + Other Pipe Rupture[f, i]	Table 5.2-7

(a) Reactor coolant pressure boundary components of the steam generators, reactor vessel, reactor coolant pumps, pressurizer.
(b) Based on elastic analysis. For simplified elastic-plastic analysis, the stress limits of the 1971 ASME Code Section III, NB-3228.3 apply.
(c) Deleted
(d) Seismic faulted conditions (DDE or Hosgri) and LOCA combined by ABSUM or SRSS method (SRSS subject to the conditions and limitations of NUREG-0484).
(e) For definition of stress criteria terms, see Additional Notes.
(f) Main steam line or feedwater line rupture as applicable.
(g) Loss of Coolant Accident (LOCA) Loads - The original stress analysis considered main coolant pipe ruptures. With the acceptance of the DCPP leak-before-break analysis by the NRC, only the loads resulting from RCS branch line breaks are considered.
(h) The more limiting between the DDE loads and the Hosgri loads.
(i) DDE or Hosgri and Other Pipe Rupture combined by ABSUM, unless otherwise noted.
(j) For steam generators, stress limits are taken from Appendix F of ASME III.
(k) For the reactor vessel, the Faulted-1stress limit is:
P_m (or P_L) $\leq 1.2S_m$ or S_y*P_m (or P_L) + $P_b \leq 1.8S_m$ or 1.5 S_y*
(*For elastic analysis, use the greater of the values specified).

P_m = General membrane; average primary stress across solid section. Excludes discontinuities and concentrations. Produced only by mechanical loads.
P_L = Local membrane; average stress across any solid section. Considers discontinuities, but not concentrations. Produced only by mechanical loads.
P_b = Bending; component of primary stress proportional to distance from centroid of solid section. Excludes discontinuities and concentrations. Produced only by mechanical loads.

TABLE 5.2-6

LOAD COMBINATIONS AND STRESS CRITERIA FOR PRIMARY EQUIPMENT

P_e = Expansions; stresses which result from the constraint of "free end displacement" and the effect of anchor point motions resulting from earthquakes. Considers effects of discontinuities, but not local stress concentration. (Not applicable to vessels and pumps).

Q = Membrane Plus Bending; self-equilibrating stress necessary to satisfy continuity of structure. Occurs at structural discontinuities. Can be caused by mechanical loads or by differential thermal expansion. Excludes local stress concentrations.

U_T = Cumulative usage factor.

S_m = Stress intensity from ASME Section III at temperature

S_y = Yield stress at temperature

TABLE 5.2-6a

LOAD COMBINATIONS AND ACCEPTANCE CRITERIA FOR REPLACEMENT PRIMARY EQUIPMENT(Note 1)

LOAD CONDITION	LOAD COMBINATION(Note 2 & 6)	ACCEPTANCE CRITERIA
Design	DL + P ± DE	ASME Boiler and Pressure Vessel (B&PV) Code, Section III, Division 1, 2001 Edition through 2003 Addenda – Subsections NCA and NB
Normal (ASME Service Level A)	DL + P ± I(Note 3) + T	
Upset (ASME Service Level B)	DL + P + T ± DE DL + P + T	
Faulted (ASME Service Level D)	DL + P ± (HE or DDE) DL + P ± DDE + LOCA(Note 4 & 5) DL + P ± HE + LOCA(Note 4, 5)	ASME B&PV Code, Section III, Division 1, 2001 Edition through 2003 Addenda - Appendix F

NOTES:

1. RVCH, CRDM pressure housings (pressure retaining components), CETNA, and Vent/RVLIS nozzle
2. Load Case Description
   - DL Dead Load (or Dead Weight)
   - I Impulse
   - P Pressure
   - T Thermal Expansion (considered if applicable)
   - DE Design Earthquake
   - DDE Double Design Earthquake
   - HE Hosgri Earthquake
   - LOCA Loss of Coolant Accident Load(Note 4)
3. Impulse loads apply only to CRDMs
4. For CRDMs, LOCA loads are applied where the CRDM attaches to the RVCH.
5. Seismic faulted conditions (DDE or HE) and LOCA combined by ABSUM or SRSS method (SRSS subject to the conditions and limitations of NUREG-0484).
6. Other pipe ruptures; i.e., main steam line break and feedwater line break, do not impact these components and, therefore, are not included in the load combinations.

TABLE 5.2-7

FAULTED CONDITION STRESS LIMITS FOR PG&E QUALITY/CODE CLASS I COMPONENTS

System (or Subsystem) Analysis	Component Analysis	Stress Limits for Vessels and Pumps [f]		Stress Limits for Loop Piping[h]	Test
		P_m	$P_m + P_b$	P	
Elastic	Elastic	Smaller of 2.4 S_m and 0.70 S_u	Smaller of 3.6 Sm and 1.05 S_u[b]	$3.6S_h$[g]	0.8 L_T[c][d]
	Plastic	Larger of 0.70 S_u or $S_y + 1/3\ (S_u - S_y)$[c]	Larger of 0.70 S_{ut} or $S_y + 1/3\ (S_{ut} - S_y)$[c]	Larger of 0.70 S_{ut} or $S_y + 1/3\ (S_{ut} - S_y)$[c]	0.8 L_T[c][d]
	Limit Analysis	$0.9L_1$[a][c]	$0.9L_1$[a][c]	$0.9L_1$[a][c]	0.8 L_T[c][d]
Plastic	Plastic	Larger of 0.70 S_u or	Larger of 0.70 S_{ut} or	Larger of 0.70 S_{ut} or	0.8 L_T[c][d]
	Elastic	$S_y + 1/3\ (S_u - S_y)$	$S_y + 1/3\ (S_{ut} - S_y)$	$S_y + 1/3\ (S_{ut} - S_y)$	

S_y = Yield stress at temperature
S_u = Ultimate stress from engineering stress strain curve at temperature
S_h = Allowable stress from B31.1 Code
S_{ut} = ultimate stress from true stress-strain curve at temperature
S_m = stress intensity from ASME Section III at temperature

(a) L_1 = Lower bound limit load with an assumed yield point equal to 2.3 S_m or 1.5 S_y, as applicable.
(b) These limits are based on a bending shape factor of 1.5 for simple bending cases with different shape factors; the limits will be changed proportionally.
(c) When elastic system analysis is performed, the effect of component deformation on the dynamic system response should be checked.
(d) L_T = The limits established for the analysis need not be satisfied if it can be shown from the test of a prototype or model that the specified loads (dynamic or static equivalent) do not exceed 80% of L_T, where L_T is the ultimate load or load combination used in the test. In using this method, account shall be taken of the size effect and dimensional tolerances (similitude relationships) that may exist between the actual component and the tested models to ensure that the loads obtained from the test are a conservative representation of the load carrying capability of the actual component under postulated loading for faulted conditions.
(e) Deleted
(f) For steam generators, stress limits are taken from Appendix F of ASME Section III.
(g) 3.6 S_h limit applies to DDE or Hosgri + pipe break (LOCA, main steam line, or feedwater line rupture) faulted conditions only.
(h) Loop piping and branch lines ≥ 6 inch diameter.

TABLE 5.2-8

LOADING COMBINATIONS AND ACCEPTANCE CRITERIA FOR PRIMARY EQUIPMENT[a] SUPPORTS

CONDITION	LOADING COMBINATIONS	LINEAR-TYPE COMPONENT SUPPORT STRESS LIMITS[i][j]
Normal	Deadweight + Temperature + Pressure	1969 AISC Specification, Part 1
Upset	Deadweight + Temperature + Pressure ± DE	1969 AISC Specification, Part 1
Faulted - 1	Deadweight + Pressure ± DDE	1969 AISC Specification, Part 2[c] or S_y after load redistribution, whichever is higher
Faulted - 2	Deadweight + Pressure ± DDE or Hosgri[b,g] + LOCA[b,f]	1969 AISC Specification, Part 2[c] or S_y after load redistribution, whichever is higher
Faulted - 3	Deadweight + Pressure ± Hosgri	1969 AISC Specification, Part 2[c] or S_y after load redistribution, whichever is higher
Faulted - 4	Deadweight + Pressure ± DDE or Hosgri[g] + Other Pipe Rupture[d,h]	1969 AISC Specification, Part 2[c] or S_y after load redistribution, whichever is higher

(a) Steam generators, reactor vessel, reactor coolant pumps, pressurizer.
(b) Seismic faulted conditions (DDE or Hosgri) and LOCA combined by ABSUM or SRSS method (SRSS subject to the conditions and limitations of NUREG-0484).
(c) For supports qualified by load test, allowable loads = 0.8 times L_t per UFSAR Table 5.2-7.

TABLE 5.2-8

LOADING COMBINATIONS AND ACCEPTANCE CRITERIA FOR
PRIMARY EQUIPMENT SUPPORTS

(d) Main steam line or feedwater line rupture whichever is more limiting.
(e) Deleted
(f) LOCA – Loss of Coolant Accident Loads - The original stress analysis considered main coolant pipe ruptures. With the acceptance of the DCPP leak-before-break analysis by the NRC, only the loads resulting from RCS branch line breaks are considered.
(g) The more limiting between the DDE loads and the Hosgri loads.
(h) DDE or Hosgri and Other Pipe Rupture combined by ABSUM, unless otherwise noted.
(i) Stress Limits are also applicable to bolts and anchor bolts. When using S_y, connection strength shall exceed the strength of the weakest connected member, shear yield shall be taken as $Sy/3^{0.5}$, and combined tension/shear shall meet the elliptical interaction relationship.
(j) For plate and shell-type component supports, allowable stress limits shall be per ASME BPVC Section III, Sub-Section NF, 1980 Edition including Winter 82 Addenda.

TABLE 5.2-8a

LOAD COMBINATIONS AND ACCEPTANCE CRITERIA
FOR INTEGRATED HEAD ASSEMBLY (IHA)

[PG&E Design Class I Support Structure Components]

LOAD CONDITION	LOAD COMBINATION(Notes 1 &,2)	ACCEPTANCE CRITERIA
Design	DL + P	ASME Boiler and Pressure Vessel (B&PV) Code, Section III, Division 1, 2001 Edition through 2003 Addenda - Subsection NF
Normal (ASME Service Level A)	DL + ML DL + P + T	
Upset (ASME Service Level B)	DL + P ± DE DL + P + T ± DE	
Faulted (ASME Service Level D)	DL + P + T ± (HE or DDE) DL + P + T ± $(DDE^2+LOCA^2)^{1/2}$ DL + P + T ± $(HE^2+LOCA^2)^{1/2}$	ASME B&PV Code, Section III, Division 1, 2001 Edition through 2003 Addenda - Appendix F
Faulted (Missile Shield and Support)	DL + P + T ± $(DDE^2+MI^2)^{1/2}$ DL + P + T ± $(HE^2+ MI^2)^{1/2}$	

NOTES:

1. Load Case Description

DL	Dead Load
P	Pressure
T	Thermal(Note 2)
ML	Maintenance Load (live loads on walkways during maintenance activities)
MI	Missile impact load (missile shield and support only)
DE	Design Earthquake
DDE	Double Design Earthquake
HE	Hosgri Earthquake
LOCA	Loss of Coolant Accident Load(Note 3)

2. The IHA offers no resistance to reactor vessel thermal growth and, therefore, sustains no stress due to such growth. The temperature load symbol is included in the above table since this load was considered as part of the IHA design criteria. Applicable service and accident temperatures are considered when determining material properties and material allowable stress values.

3. The response spectra input used for the IHA LOCA analysis is the envelope of the Unit 1 and 2 LOCA response spectra associated with a pressurizer surge line break, residual heat removal (RHR) line break, and accumulator line break. LOCA motions are at the reactor head and were therefore applied where the IHA is attached to the reactor head.

TABLE 5.2-9

ACTIVE AND INACTIVE VALVES IN THE REACTOR COOLANT PRESSURE BOUNDARY[a]

System	Valves I.D. Number	Location and Figure Number	Type	Valve Size, in.	Valve Actuation	Type A-Active I-Inactive
RCS	8000 A, B, C	Pressurizer Figure 3.2-7, Sheets 3 & 4	Gate	3	Motor	A
RCS	8010 A, B, C	Pressurizer Figure 3.2-7, Sheets 3 & 4	Relief	6	ΔP	A
RCS	8078 A,B,C,D	Reactor vessel head vent Figure 5.5-14	Globe	1	Solenoid	A
RCS	PCV-455 A,B	Pressurizer spray Figure 3.2-7, Sheets 3 & 4	Ball	4	Air	I
RCS	PCV-455 C PCV-456	Pressurizer Figure 3.2-7, Sheets 3 & 4	Globe	2	Air	A
RCS	PCV-474	Pressurizer Figure 3.2-7, Sheets 3 & 4	Globe	2	Air	I
CVCS	LCV-459	RCS cold leg loop 2 Figure 3.2-8, Sheets 5 & 6	Globe	2	Air	A
CVCS	LCV-460	RCS cold leg loop 2 Figure 3.2-8, Sheets 5 & 6	Globe	2	Air	A
CVCS	8145 8148	CVCS pressurizer auxiliary spray Figure 3.2-8, Sheets 5 & 6	Globe	2	Air	A
CVCS	8166 8167	RCS excess letdown Figure 3.2-8, Sheets 1B & 2	Globe	1	Air	I

TABLE 5.2-9

System	Valves I.D. Number	Location and Figure Number	Type	Valve Size, in.	Valve Actuation	Type A-Active I-Inactive
CVCS	8367 A, B, C, D	CVCS seal water injection Figure 3.2-8, Sheets 1, 1A, 1B, 1C & 2	Check	2	ΔP	I
CVCS	8372 A, B, C, D	CVCS seal water injection Figure 3.2-8, Sheets 1, 1A, 1B, 1C & 2	Check	2	ΔP	I
CVCS	8377	CVCS pressurizer auxiliary spray Figure 3.2-8, Sheets 5 & 6	Check	2	ΔP	I
CVCS	8378 A 8379 A	CVCS charging line to loop 3 Figure 3.2-8, Sheets 5 & 6	Check	3	ΔP	I
CVCS	8378 B 8379 B	CVCS charging line to loop 4 Figure 3.2-8, Sheet 5 & 6	Check	3	ΔP	I
RHR	8701	RHR isol. hot leg loop 4 Figure 3.2-10, Sheets 1 & 2	Gate	14	Motor	I[(b)]
RHR	8702	RHR isol. hot leg loop 4 Figure 3.2-10, Sheets 1 & 2	Gate	14	Motor	I[(b)]
RHR	8740 A, B	RCS hot leg Figure 3.2-10, Sheets 1 & 2	Check	8	ΔP	I
SIS	8818 A, B, C, D	SIS cold leg Figure 3.2-9, Sheets 5 & 6	Check	6	ΔP	I
SIS	8819 A, B, C, D	SIS cold legs Figure 3.2-9, Sheets 5 & 6	Check	2	ΔP	I

TABLE 5.2-9

System	Valves I.D. Number	Location and Figure Number	Type	Valve Size, in.	Valve Actuation	Type A-Active I-Inactive
SIS	8820	SIS boron injection containment isolation, Figure 3.2-9, Sheets 3 & 4	Check	3	ΔP	I
SIS	8900 A, B, C, D	SIS cold leg Figure 3.2-9, Sheets 3 & 4	Check	1 1/2	ΔP	I
SIS	8905 A, B, C, D	RCS hot legs Figure 3.2-9, Sheets 5 & 6	Check	2	ΔP	I
SIS	8948 A, B, C, D	RCS cold leg Figure 3.2-9, Sheets 1 & 2	Check	10	ΔP	I
SIS	8949 A, B, C, D	RCS hot legs Figure 3.2-9, Sheets 5 & 6	Check	6	ΔP	I
SIS	8956 A, B, C, D	RCS cold leg Figure 3.2-9, Sheets 1 & 2	Check	10	ΔP	I

(a) As defined in 10 CFR 50.2, valves are listed first by system (RCS, CVCS, RHR, and SIS) and then by valve I.D. number.

(b) For the postulated Hosgri earthquake this valve is considered active.

TABLE 5.2-10

REACTOR COOLANT SYSTEM NOMINAL PRESSURE SETPOINTS (PSIG)

Design pressure	2485
Operating pressure	2235
Safety valves	2485
Power relief valves	2335
Pressurizer spray valves (begin to open)	2260
Pressurizer spray valves (full open)	2310
High-pressure reactor trip	2385
High-pressure alarm	2310
Low-pressure reactor trip (typical, but variable)	1950
Low-pressure alarm	2210
Hydrostatic test pressure	3107
Backup heaters on (pressurizer)	2210
Proportional heaters (begin to operate)	2250
Proportional heaters (full operation) pressurizer	2220
Pressurizer power relief valve interlock	2185

TABLE 5.2-11

REACTOR VESSEL MATERIALS

Section	Materials
Pressure plate	Unit 1: A-533 Grade B Class 1 Unit 2: SA-533 Grade B Class 1
Pressure forgings	Unit 1: A-508 Class 2 Unit 2: SA-508 Class 2
RVCH Forging	SA-508 Grade 3 Class 1
Primary nozzle safe ends	Stainless steel Type 316 Forging
Cladding, stainless	Type 304 or equivalent (Combination of Types 308, 308L, 309, 309L, and 312)
Stainless weld rod	Types 308L, 308, and 309
O-ring head seals	Inconel 718
CRDM housings	Inconel 690 and stainless Type 304
Lower tube	SB-167
Studs	SA-540 Grade B-23 and B-24
Instrumentation nozzles	Inconel 600
Thermal insulation	Stainless steel

TABLE 5.2-12

PRESSURIZER, PRESSURIZER RELIEF TANKS, AND SURGE LINE MATERIALS

Pressurizer	Unit 1	Unit 2
Shell	SA-533, Grade A (Class 1)	SA-533, Grade A (Class 2)
Heads	SA-216, Grade WCC	SA-533, Grade A (Class 2)
Support skirt	SA-516, Grade 70	SA-516, Grade 70
Nozzle weld ends	SA-182, F316	SA-182, F316L
Inst. tube coupling	SA-182, F316	SA-182, F316
Cladding, stainless	Type 304 or equivalent	Type 304 or equivalent
Nozzle forgings		SA-508, Class 2 Mn-Mo
Nozzle Weld Overlay	N/A	
First pass		309L, ERNiCr-3 over dissimilar metal weld
Remainder of overlay		ERNiCrFe-7 (Automatic GTAW) ERNiCrFe-7A (Manual GTAW)
Internal plate	SA-240, Type 304	SA-240, Type 304
Inst. tubing	SA-213, Type 304 316	SA-213, Type 304 316
Heater well tubing	SA-213, Type 316 seamless	SA-213, Type 316 seamless
Heater well adaptor	SA-182, F316	SA-182, F316
Pressurizer Relief Tank		
Shell	ASTM A-285, Grade C	ASTM A-285, Grade C
Heads	ASTM A-285, Grade C	ASTM A-285, Grade C
Internal coating	Amercoat 55	Amercoat 55
Surge Line		
Pipes	ASTM A-376, Type 316	ASTM A-376, Type 316
Fittings (14 inch elbows)	ASTM A-403, WP316	ASTM A-403, WP316
Nozzles	ASTM A-182, Grade F316	ASTM A-182, Grade F316

TABLE 5.2-12

Valves	Unit 1	Unit 2
Pressure-containing parts	ASTM A-351, Grade CF8M ASTM A-182, Grade F and ASME SA-351, Grade CF3M (for RCS-8029)	ASTM A-351, Grade CF8M ASTM A-182, Grade F and ASME SA-351, Grade CF3M (for RCS-8029)

TABLE 5.2-13

REACTOR COOLANT PUMP MATERIALS

Shaft	ASTM A-182, Grade F347
Impeller	ASTM A-351, Grade CF8
Casing	ASTM A-351, Grade CF8
Flywheel	ASTM A-533, Grade B, Class I

TABLE 5.2-14

STEAM GENERATOR MATERIALS

Pressure forgings	ASME SA 508, Grade 3, Class 2
Cladding	Stainless steel Types 309L, 308L
Tubesheet cladding	Alloy 690 weld material
Tubes	Alloy 690 TT

TABLE 5.2-15

REACTOR COOLANT WATER CHEMISTRY SPECIFICATION

Parameter	Steady State	Transient Limit
Conductivity, μMho/cm @ 25°C	(a)(c)	----
pH @ 25°C	(a)(c)	----
Oxygen, ppm[b]	≤ 0.10	≤ 1.0
Chloride, ppm	≤ 0.15	≤ 1.5
Fluoride, ppm	≤ 0.15	≤ 1.5
Hydrogen, cc(STP)/kg		
power > 1 MWt	(c)	----
normal target band	(c)	----
Total suspended solids, ppm	(c)	----
Li-7, ppm as Li	(c)	----
Boric acid, ppm as B	(c)	----
Silica, ppm	(c)	----
Aluminum, ppm	(c)	----
Calcium, ppm	(c)	----
Magnesium, ppm	(c)	----
Sulfur compounds, ppm	(c)	----

(a) Varies with boric acid and lithium hydroxide concentration.

(b) Limit is not applicable with Tavg ≤ 250°F. During startup, hydrazine may be used to achieve RCS concentrations of up to 10 ppm when the coolant temperature is between 150 and 180°F and the oxygen exceeds 0.1 ppm.

(c) Chemical Control Limits and Actions Guidelines for the Primary Systems are listed in plant procedures.

TABLE 5.2-16

REACTOR COOLANT BOUNDARY LEAKAGE DETECTION SYSTEMS

Radioactivity Detection Systems

Detector Location or Process	Medium	Type	Range	Approximate Time to Detect 1-gpm Leak	Identified Leak Detection[c]	Instrument Class[a]	Indicator in Control Room
Containment	Air	G-M	10^{-1} to 10^{4} mR/hr	Less responsive than other detection systems	No	II	Yes
Incore inst area	Air	G-M	10^{-1} to 10^{4} mR/hr	Less responsive than other detection systems	No	II	Yes
Containment air particulate	Air	NaI Scintillator	10 to 10^{6} cpm	See Fig. 5.2-9	No	II[b]	Yes
Containment radiogas	Air	G-M	10 to 10^{6} cpm	See Fig. 5.2-9	No	II[b]	Yes
Plant vent radiogas	Air	Beta Scintillator	10 to 5E6 cpm	Less responsive than other detection systems	No	IB	Yes
Condenser air ejector	Air	Beta Scintillator	10 to 5E6 cpm	See Fig. 5.2-10	Yes	II	Yes
Component cooling liquid	Liquid	NaI Scintillator	10 to 10^{6} cpm	See Fig. 5.2-12	No	IC	Yes
Steam generator blowdown	Liquid	NaI Scintillator	10 to 10^{6} cpm	See Fig. 5.2-11	Yes	II	Yes

TABLE 5.2-16

Other Detection Systems

Detector Location or Process	Medium	Type	Range and Repeatability[e]	Approximate Time to Detect 1-gpm Leak [q]	Identified[c] Leak Detection	Instrument Class[a]	Indicator in Control Room
Containment[d] condensation	Liquid	Change in time required to accumulate fixed volume	see note (m)	1 hr [g][h][l]	No	II	Yes
Containment sumps	Liquid	Liquid level and quantity of liquid	1 to 48 in. W.C. [n] 1 to 35 in. W.C. [p] ±1 in.	<1 hr [h]	No	II	Yes
Reactor vessel flange leakoff	Liquid	Temperature	50 to 300 °F ±5 °F	<30 sec [f]	Yes	II	Yes
Reactor coolant drain tank	Liquid	Liquid level and quantity of liquid	0-100% ±2%	<20 min [h]	Yes	II	No
Pressurizer relief valve discharge	Liquid	Temperature	50 to 400 °F ±7 °F	<30 sec [f]	Yes	II	Yes
Pressurizer relief tank	Liquid				Yes	II	Yes
		Liquid level	0 to 100 % ±2%	<12 hrs [h]			

TABLE 5.2-16

Systems Used to Quantify Leakage [i]

Detector System	Medium	Type	Range/Sensitivity	Instrument Class	Indicated in Control Room
Pressurizer level	Liquid	Liquid level	0 to 100% [g][j] ~125 gal/% level	IA	Yes
Volume control tank level	Liquid	Liquid level	0 to 100% [g][j] ~19 gal/% level	II	Yes
Charging pump flow	Liquid	Flow	0 to 200 gpm [k] ± 10% span when flow >60 gpm (channel uncertainty value)	IB	Yes
Pressurizer relief tank level	Liquid	Liquid level	0 to 100% [h] ~128 gal/% level	II	Yes

(a) The PG&E Design Class I instrumentation (i.e., Instrument Class IA and Instrument Class IB Category 1) is capable of performing its nuclear safety function during and after a Double Design Earthquake (DDE) and/or Hosgri Earthquake (HE). Class IC instrument systems refer to maintenance of pressure boundary integrity of Category I fluid systems. Also refer to UFSAR Sections 3.2 and 3.10.2.

(b) These units were not constructed to withstand DDE accelerations; however, they will be housed in a PG&E Design Class I structure and protected from external damage associated with a seismic event. Therefore, it is considered that these units can be returned to operational status within 36 hours of a DDE.

(c) Leakage is defined as identified or unidentified in accordance with Regulatory Guide 1.45.

(d) Containment condensation measures moisture condensed by the fan cooler drip collection system.

(e) Repeatability, including the operators ability to read the same value at another time, is included in this column; this is a true measure of ability to detect a change in system conditions over a period of time.

(f) Automatically alarmed.

(g) Requires operator action - (i.e., close valve, start-stop pump, etc., and operator monitoring and logging).

(h) Requires operator monitoring and logging to note changes in rate, level, flow, etc.

(i) Systems listed here would be used to quantify true leakage rate in the event systems listed on Sheets 1 & 2 above detected an unidentified leak. These systems also provide additional capability for detecting leak rates of 1-gpm within short periods of time.

(j) Normal variations in process variable or automatic control systems will mask this change. Operator must take action as in (g) above to detect leakage.

(k) Insufficient accuracy/repeatability to ever detect a 1-gpm change in flowrate.

(l) Dependent on initial conditions. May take longer for fan cooler drip level if humidity is initially low.

(m) Level switches (HI and HI-HI) are provided in each CFCU drain line. The level switches have a fixed location in each drain line providing a repeatable alarm. The time intervals between the receipt of the HI level and HI-HI level alarms are monitored and logged by the operator. Alarm intervals less than a conservative pre-defined value directs the operator to perform an RCS water inventory balance to quantify the RCS leakage rate.

(n) This range refers to the containment structure sumps.

(o) Not used.

(p) This range refers to the reactor cavity sump.

(q) This column refers to the capability of the detection system to sense a leak.

TABLE 5.2-17A

DCPP UNIT 1 REACTOR VESSEL TOUGHNESS DATA

Component	Plate No.	Material Type	Cu (Wt%)	Ni (Wt%)	P (Wt%)	NDTT °F	Minimum 50 Ft-lb/35 Mil Tempt °F Long	Minimum 50 Ft-lb/35 Mil Tempt °F Trans	RT_{NDT} °F	Average Upper Shelf Ft-lb Long	Average Upper Shelf Ft-lb Trans
Repl. Cl. Hd.	07W89-1-1	SA508,CL1	0.05	0.82	0.005	-50[b]	-	20	-50[b]	-	211
Ves. Sh. Flg.	B4101	A508,CL2	--	0.75	0.010	35[a]	-5	15[a]	35		99[a]
Inlet Noz.	B4103-1	A508,CL2	--	0.66	0.013	60[a]	17	37[a]	60		77[a]
Inlet Noz.	B4103-2	A508,CL2	--	0.67	0.013	60[a]	27	47[a]	60		75[a]
Inlet Noz.	B4103-3	A508,CL2	--	0.68	0.010	43[a]	10	30[a]	43		108[a]
Inlet Noz.	B4103-4	A508,CL2	--	0.66	0.010	48[a]	2	22[a]	48		106[a]
Outlet Noz.	B4104-1	A508,CL2	--	0.74	0.011	60[a]	-13	7[a]	60		77[a]
Outlet Noz.	B4104-2	A508,CL2	--	0.76	0.006	43[a]	-3	17[a]	43		74[a]
Outlet Noz.	B4104-3	A508,CL2	--	0.71	0.012	54[a]	-12	8[a]	54		86[a]
Outlet Noz.	B4104-4	A508,CL2	--	0.68	0.008	60[a]	30	50[a]	60		84[a]
Upper Shl.	B4105-1	SA533B,CL1	0.12	0.56	0.010	10	68	88[a]	28		80[a]
Upper Shl.	B4105-2	SA533B,CL1	0.12	0.57	0.008	0	49	69[a]	9		74[a]
Upper Shl.	B4105-3	SA533B,CL1	0.14	0.56	0.010	0	54	74[a]	14		81[a]
Inter. Shl.	B4106-1	SA533B,CL1	0.125	0.53	0.013	-10	57	40	-10	134	116
Inter. Shl.	B4106-2	SA533B,CL1	0.120	0.50	0.013	-10	36	57	-3	132	114
Inter.Shl.	B4106-3	SA533B,CL1	0.086	0.476	0.011	10	70	90[a]	30	119	77[a]
Lower Shl.	B4107-1	SA533B,CL1	0.13	0.56	0.011	-10	59	75	15	127	110
Lower Shl.	B4107-2	SA533B,CL1	0.12	0.56	0.010	-10	64	80	20	127	103
Lower Shl.	B4107-3	SA533B,CL1	0.12	0.52	0.010	-50	52	38	-22	135	116
Bot. Hd. Seg.	B4111-1	SA533B,CL1	0.15	0.51	0.014	-20	33	53[a]	-7		82[a]
Bot. Hd. Seg.	B4111-2	SA533B,CL1	0.12	0.53	0.009	-40	16	36[a]	-24		90[a]
Bot. Hd. Seg.	B4111-3	SA533B,CL1	0.13	0.50	0.009	-40	21	41[a]	-19		85[a]
Bot. Hd. Seg.	B4110	SA553B,CL1	0.06	0.44	0.010	-10	60	80[a]	20		75[a]

(a) Estimated per NRC Standard Review Plan Section 5.3.2.
(b) An NDTT value of -40F was used in the vendor analysis.

TABLE 5.2-17B

DCPP UNIT 2 REACTOR VESSEL TOUGHNESS DATA

Component	Plate No.	Material Type	Cu (Wt%)	Ni (Wt%)	P (Wt%)	NDTT °F	Minimum 50 Ft-lb/35 Mil Tempt °F Long	Minimum 50 Ft-lb/35 Mil Tempt °F Trans	RT_{NDT} °F	Average Upper Shelf Ft-lb Long	Average Upper Shelf Ft-lb Trans
Repl. Cl. Hd.	06W255-1-1	SA508,CL1	0.05	0.82	0.005	-40	--	20	-40	--	211
Inlet Noz.	B5461-1	A508,CL2	0.09	0.70	0.012	-20	23	43[a]	-17	116	75
Inlet Noz.	B5461-2	A508,CL2	0.09	0.70	0.012	-20	-2	18[a]	-20	119	77[a]
Inlet Noz.	B5461-3	A508,CL2	0.10	0.82	0.013	-40	-45	-25[a]	-40	127	83[a]
Inlet Noz.	B5461-4	A508,CL2	0.10	0.81	0.013	-40	-48	-28[a]	-40	129	84[a]
Outlet Noz.	B5462-1	SA508,CL2	0.11	0.67	0.010	-50	-4	16[a]	-44	145	94
Outlet Noz.	B5462-4	SA508,CL2	0.11	0.67	0.009	-40	-10	10[a]	-40	137.5	89[a]
Outlet Noz.	B5462-2	SA508,CL2	0.11	0.67	0.009	-40	14	34[a]	-26	135.5	88[a]
Outlet Noz.	B5462-3	SA508,CL2	0.11	0.67	0.009	-50	17	37[a]	-23	131.5	85[a]
Upper Shl.	B5453-1	SA533B,CL1	0.11	0.60	0.014	0	85	88	28	92	82
Upper Shl.	B5453-3	SA533B,CL1	0.11	0.60	0.012	-10	45	65[a]	5	136.5	86.5[ab]
Upper Shl.	B5011-1R	SA533B,CL1	0.11	0.65	0.015	10	40	60[a]	0	110	72[a]
Inter. Shl.	B5454-1	SA533B,CL1	0.14	0.65	0.010	-40	14	112	52	128	91
Inter. Shl.	B5454-2	SA533B,CL1	0.14	0.59	0.012	0	60	127	67	113	99
Inter. Shl.	B5454-3	SA533B,CL1	0.15	0.62	0.013	-40	30	93	33	129	90
Lower Shl.	B5455-1	SA533B,CL1	0.14	0.56	0.010	-20	42	45	-15	134	112
Lower Shl.	B5455-2	SA533B,CL1	0.14	0.56	0.011	0	25	45	0	137	122
Lower Shl.	B5455-3	SA533B,CL1	0.10	0.62	0.010	0	55	75	15	128	100
Bot. Hd. Seg.	B5009-2	SA533B,CL1	0.13	0.57	0.011	-10	110	130[a]	70	85	55[a]
Bot. Hd. Seg.	B5009-3	SA533B,CL1	0.13	0.60	0.009	-20	-12	8[a]	-20	131	84
Bot. Hd. Seg.	B5009-1	SA533B,CL1	0.13	0.58	0.010	0	88	108[a]	48	95	62[a]
Bot. Hd. Seg.	B5010	SA533B,CL1	0.14	0.63	0.011	-30	20	40[a]	-20	114	74

(a) Estimated per NRC Standard Review Plan Section 5.3.2.
(b) Westinghouse Letter LTR-PCAM-09-26, Revision 1, "Diablo Canyon Units 1 and 2 Reactor Vessel Extended Beltline Material Properties Search," June 3, 2009

TABLE 5.2-18A

IDENTIFICATION OF UNIT 1 REACTOR VESSEL BELTLINE REGION BASE MATERIAL

Component	Plate No.	Heat No.	Material Spec. No.	Composition, Wt.%							
				C	Mn	P	S	Si	Ni	Mo	Cu
Inter shell	B4106-1	C2884-1	SA533B,CL1	0.25	1.34	0.013	0.015	0.21	0.53	0.45	0.125
Inter shell	B4106-2	C2854-2	SA533B,CL1	0.18	1.32	0.013	0.015	0.23	0.50	0.46	0.120
Inter shell	B4106-3	C2793-1	SA533B,CL1	0.20	1.33	0.011	0.012	0.25	0.476	0.46	0.086
Lower shell	B4107-1	C3121-1	SA533B,CL1	0.25	1.36	0.011	0.014	0.24	0.56	0.48	0.13
Lower shell	B4107-2	C3131-2	SA533B,CL1	0.24	1.32	0.010	0.013	0.23	0.56	0.46	0.12
Lower shell	B4107-3	C3131-1	SA533B,CL1	0.19	1.38	0.010	0.013	0.26	0.52	0.46	0.12

TABLE 5.2-18B

IDENTIFICATION OF UNIT 2 REACTOR VESSEL BELTLINE REGION BASE MATERIAL

Component	Plate No.	Heat No.	Material Spec. No.	Composition, Wt.%							
				C	Mn	P	S	Si	Ni	Mo	Cu
Inter shell	B5454-1	C5161-1	SA533B,CL1	0.21	1.30	0.010	0.015	0.19	0.65	0.46	0.14
Inter shell	B5454-2	C5168-2	SA533B,CL1	0.25	1.38	0.012	0.016	0.21	0.59	0.55	0.14
Inter shell	B5454-3	C5161-2	SA533B,CL1	0.23	1.32	0.013	0.015	0.20	0.62	0.45	0.15
Lower shell	B5455-1	C5175-1	SA533B,CL1	0.21	1.38	0.010	0.018	0.19	0.56	0.56	0.14
Lower shell	B5455-2	C5175-2	SA533B,CL1	0.22	1.40	0.011	0.018	0.19	0.56	0.56	0.14
Lower shell	B5455-3	C5176-1	SA533B,CL1	0.23	1.34	0.010	0.014	0.20	0.62	0.56	0.10

TABLE 5.2-19A

FRACTURE TOUGHNESS PROPERTIES OF UNIT 1 REACTOR VESSEL BELTLINE REGION BASE MATERIAL

Material	T_{NDT} (°F)	Initial RT_{NDT} (°F)	Initial USE[b] (ft-lb)	EOL[a] Fluence[c] (N/cm^2)	EOL[a] RT_{NDT}[d] (°F)	EOL[a] USE[d] (ft-lb)
Upper Shell Plate						
B4105-1	10	28[e]	80[e]	1.64E+17	89	74
B4105-2	0	9[e]	74[e]	1.64E+17	70	68
B4105-3	0	14[e]	81[e]	1.64E+17	77	74
Inter Shell Plate						
B4106-1	-10	-10	116	7.93E+18	115	90
B4106-2	-10	-3	114	7.93E+18	113	90
B4106-3	10	30[e]	77[e]	7.93E+18	139	63
Lower Shell Plate						
B4107-1	-10	15	110	7.93E+18	133	87
B4107-2	-10	20	103	7.93E+18	131	82
B4107-3	-50	-22	116	7.93E+18	88	93

(a) End of license for 40 operating years, September 2021.
(b) Upper shelf energy.
(c) Fluence at vessel wall 1/4 thickness location.
(d) Per Regulatory Guide 1.99, Revision 2.
(e) Estimated from data in the longitudinal direction per NRC Standard Review Plan Section 5.3.2.

TABLE 5.2-19B

FRACTURE TOUGHNESS PROPERTIES OF UNIT 2 REACTOR VESSEL BELTLINE REGION BASE MATERIAL

Material	T_{NDT} (°F)	Initial RT_{NDT} (°F)	Initial USE[b] (ft-lb)	EOL[a] Fluence[c] (N/cm^2)	EOL[a] RT_{NDT}[d] (°F)	EOL[a] USE[d] (ft-lb)
Upper Shell Plate						
B5453-1	0	28	82	1.81E+17	74	75
B5453-3	-10	5[e]	86.5[f]	1.81E+17	65	82
B5011-1R	10	0[e]	72[e]	1.81E+17	60	66
Inter Shell Plate						
B5454-1	-40	52	91	8.75E+18	166	69
B5454-2	0	67	99	8.75E+18	180	76
B5454-3	-40	33	90	8.75E+18	173	68
Lower Shell Plate						
B5455-1	-20	-15	112	8.75E+18	114	86
B5455-2	0	0	122	8.75E+18	129	94
B5455-3	0	15	100	8.75E+18	112	81

(a) End of license for 40 operating years, April 2025.
(b) Upper shelf energy.
(c) Fluence at vessel wall 1/4 thickness location.
(d) Per Regulatory Guide 1.99, Revision 2.
(e) Estimated from data in the longitudinal direction per NRC Standard Review Plan Section 5.3.2.
(f) Westinghouse Letter LTR-PCAM-09-26, Revision 1, "Diablo Canyon Units 1 and 2 Reactor Vessel Extended Beltline Material Properties Search," June 3, 2009

TABLE 5.2-20A

IDENTIFICATION OF UNIT 1 REACTOR VESSEL BELTLINE REGION WELD METAL

Weld Location	Weld Process	Weld Wire		Flux		Average Deposit Composition, Wt.%								
		Type	Heat No.	Type	Lot No.	C	Mn	P	S	Si	Mo	Ni	CR	Cu
Upper shell to inter shell circle seam 8-442	Sub-Arc	B-4 Mod.	13253	Linde 1092	3774	0.18	1.30	0.020	0.013	0.24	0.45	0.73	0.19	0.25
Inter shell long seams 2-442 A, B, & C	Sub-Arc	B-4 Mod.	27204	Linde 1092	3724	0.14	1.36	0.016	0.025	0.45	0.48	1.018	0.06	0.203
Inter shell to lower shell circle seam 9-442	Sub-Arc	B-4 Mod.	21935	Linde1092	3869	0.14	1.38	0.015	0.010	0.15	0.54	0.704	--	0.183
Lower shell long seams 3-442 A, B, & C	Sub-Arc	B-4 Mod.	27204	Linde 1092	3774	0.14	1.36	0.016	0.025	0.45	0.48	1.018	0.06	0.203

TABLE 5.2-20B

IDENTIFICATION OF UNIT 2 REACTOR VESSEL BELTLINE REGION WELD METAL

Weld Location	Weld Process	Weld Wire		Flux		Average Deposit Composition, Wt.%								
		Type	Heat No.	Type	Lot No.	C	Mn	P	S	Si	Mo	Ni	CR	Cu
Nozzle shell to inter shell circle seam 8-201	Sub-Arc	B-4 Mod.	21935	Linde 1092	3889	0.14	1.38	0.015	0.010	0.15	0.54	0.704	—	0.183
Inter shell long seams 2-201 A, B, & C	Sub-Arc (Tandem)	B-4 Mod. B-4 Mod.	21935 12008	Linde 1092	3869	0.13	1.41	0.018	0.010	0.16	0.55	0.87	0.03	0.22
Inter shell to lower shell circle seam 9-201	Sub-Arc	B-4	10120	Linde 0091	3458	0.14	1.12	0.011	0.008	0.18	0.48	0.082	—	0.046
Lower shell long seams 3-201 A, B, & C	Sub-Arc	B-4	33A277	Linde 124	3878	0.11	1.17	0.015	0.011	0.26	0.50	0.165	0.06	0.258

TABLE 5.2-21A

FRACTURE TOUGHNESS PROPERTIES OF UNIT 1 REACTOR VESSEL BELTLINE REGION WELD METAL

Material	Initial		EOL[a]		
	RT_{NDT} (°F)	USE[b] (ft-lb)	Fluence[c] (N/cm^2)	RT_{NDT}[d] (°F)	USE[d] (ft-lb)
Upper Shell Long. Welds 1-442 A,B,C	-20	86[f]	<1.64+17	69	74
Upper Shell to Inter. Shell Weld 8-442	-56[e]	111[g]	<1.64E+17	40	93
Inter. Shell Long. Welds 2-442 A,B	-56[e]	91[h]	5.35E+18	194	66
2-442 C	-56[e]	91[h]	2.87E+18	157	69
Inter. Shell to Lower Shell Weld 9-442	-56[e]	109[i]	7.93E+18	166	75
Lower Shell Long. Welds 3-442 A,B	-56[e]	91[h]	4.46E+18	182	67
3-442 C	-56[e]	91[h]	7.93E+18	218	63

(a) End of license for 40 operating years, September 2021.
(b) Upper shelf energy.
(c) Fluence at vessel wall 1/4 thickness location.
(d) Per Regulatory Guide 1.99, Revision 2.
(e) Generic value per 10 CFR 50.61.
(f) CE Vessel Weld Test Report, April 9, 1968.
(g) WCAP 10492, Analysis of Capsule T, Salem 2 Surveillance Program, March 1984.
(h) WCAP 15958, Rev. 0, "Analysis of Capsule V from PG&E Diablo Canyon Unit 1 Reactor Vessel Radiation Surveillance Program," January 2003.
(i) PG&E Letter DCL-95-176, August 16, 1995, and PG&E Letter DCL-98-094, July 6, 1998.

TABLE 5.2-21B

FRACTURE TOUGHNESS PROPERTIES OF UNIT 2 REACTOR VESSEL BELTLINE REGION WELD METAL

Material	Initial		EOL[a]		
	RT_{NDT} (°F)	USE[b] (ft-lb)	Fluence[c] (N/cm^2)	RT_{NDT}[d] (°F)	USE[d] (ft-lb)
Upper Shell Long. Welds 1-201 A,B,C	-50	118[f]	<1.81E+17	14	97
Upper Shell to Inter. Shell Weld 8-201	-56[e]	109[g]	<1.81E+17	37	95
Inter. Shell Long. Welds 2-201 A,B	-50	118[f]	5.61E+18	165	78
2-201 C	-50	118[f]	6.08E+18	170	76
Inter. Shell to Lower Shell Weld 9-201	-56[e]	125[h]	8.75E+18	35	102
Lower Shell Long. Welds 3-201 A,B	-56[e]	88[h]	6.08E+18	121	56
3-201 B	-56[e]	88[h]	5.61E+18	118	57

(a) End of license for 40 operating years, April 2025.
(b) Upper shelf energy.
(c) Fluence at vessel wall 1/4 thickness location.
(d) Per Regulatory Guide 1.99, Revision 2.
(e) Generic value per 10 CFR 50.61.
(f) WCAP 15423, "Analysis of Capsule V from PG&E Diablo Canyon Unit 2 Reactor Vessel Radiation Surveillance Program," September 2000.
(g) PG&E Letter DCL-95-176, August 16, 1995.
(h) Average of three Charpy tests at +10°F, CD weld wire/flux qualification test.

TABLE 5.2-22

REACTOR VESSEL MATERIAL SURVEILLANCE PROGRAM
WITHDRAWAL SCHEDULE

UNIT 1

Capsule[f][g]	Location	Lead Factor[d]	Fluence at Capsule Center (n/cm^2)[d]	Removal Time (Plant EFPY)[a]
S	320°	3.48	2.83E+18	1.25 (Tested,1R1)
Y	40°	3.45	1.05E+19	5.86 (Tested, 1R5)
T	140°	3.45	1.05E+19	5.86 (Removed, 1R5)
Z	220°	3.45	1.05E+19	5.86 (Removed, 1R5)
V	320°	2.26	1.36E+19	14.3 (Tested 1R11)
C[b]	140°	3.47	1.22E+19	15.9 (Removed 1R12)
D[b]	220°	3.47	1.22E+19	15.9 (Removed 1R12)
B[b]	40°	3.47	3.44E+19 (projected)	33.0 (Planned 1R23)
A[b]	184°	1.32	Standby	Standby
U	356°	1.24	Standby	Standby
X	176°	1.24	Standby	Standby
W	4°	1.24	Standby	Standby

UNIT 2

Capsule	Location	Lead Factor[d]	Fluence at Capsule Center (n/cm^2)[d]	Removal Time (EFPY)[a]
U	56°	5.20	3.30E+18	1.02 (Tested, 2R1)
X	236°	5.39	9.06E+18	3.16 (Tested, 2R3)
Y	238.5°	4.56	1.53E+19	7.08 (Tested, 2R6)
W[e]	124°	5.35	2.78E+19	11.49 (Removed, 2R9)
V[e]	58.5°	4.57	2.38E+19	11.49 (Tested, 2R9)
Z[e]	304°	5.35	2.78E+19	11.49 (Removed, 2R9)

(a) Approximate full power years from plant startup.
(b) Four supplemental capsules installed at 5.86 EFPY (EOC5).
(c) Deleted in Revision 16.
(d) Approximate values taken from WCAP-17299-NP (Rev. 0) for Units 1 and 2.
(e) Capsule EFPY for Unit 2 capsules removed in 2R9; W = 61.5, V = 52.5, and Z = 61.5
(f) Unit 1 capsules T, U, W, X, and Z are Type 1 (base metal only)
(g) Unit 1 capsules S, V, and Y are Type 2 (base metal and weld)

TABLE 5.2-23

REACTOR COOLANT SYSTEM PRESSURE BOUNDARY ISOLATION VALVES

	VALVE NUMBER	FUNCTION
1.	8948 A, B, C, and D	Accumulator, RHR, and SIS first off check valves from RCS cold legs
2.	8819 A, B, C, and D	SIS second off check valves from RCS cold legs
3.	8818 A, B, C, and D	RHR second off check valves from RCS cold legs
4.	8956 A, B, C, and D	Accumulator second off check valves from RCS cold legs
5.	8701 and 8702	RHR suction isolation valves
6.	8949 A, B, C, and D	RHR and SIS first off check valves from RCS hot legs
7.	8905 A, B, C, and D	SIS second off check valves from RCS hot legs
8.	8740[(a)] A and B	RHR second off check valves from RCS hot legs

---

[(a)] 8703 may be used to satisfy Technical Specification 3.4.14 Required Actions A.1 or A.2.1 when in Condition A for valves 8740A and 8740B.

TABLE 5.4-1

REACTOR VESSEL DESIGN PARAMETERS (BOTH UNITS)

Design/operating pressure, psig	2485/2235
Design temperature, °F	650
Overall height of vessel and closure head, ft-in. (bottom head OD to the control rod mechanism latch housing mating surface)	47-9
Thickness of insulation, min, in.	3
Number of reactor closure head studs	54
Diameter of reactor closure head/studs, in.	7
ID of flange, in.	167
OD of flange, in.	205
ID at shell, in.	173
Inlet nozzle ID, in.	27-1/2
Outlet nozzle ID, in.	29
Cladding thickness, min, in.	5/32
Lower head thickness, min, in.	5-1/4
Vessel beltline thickness, min, in.	8-1/2
Closure head thickness, in.	7

TABLE 5.4-2

HISTORICAL INFORMATION IN ITALICS BELOW NOT REQUIRED TO BE REVISED

REACTOR VESSEL CONSTRUCTION QUALITY ASSURANCE PROGRAM

Forgings	*RT*[a]	*UT*[a]	*PT*[a]	*MT*[a]
1. Flanges	-	*Yes*	-	*Yes*
2. Studs	-	*Yes*	-	*Yes*
3. Instrumentation tubes	-	*Yes*	*Yes*	-
4. Main nozzles	-	*Yes*	-	*Yes*
5. Nozzles safe ends	-	*Yes*	*Yes*	-
6. CRDM and Thermocouple Nozzles	-	*Yes*	*Yes*	-
7. RVHVS and RVLIS Nozzles	*Yes*	-	*Yes*	-
Plates	-	*Yes*	-	*Yes*
Weldments				
1. Main seam	*Yes*	*Yes*[c]	-	*Yes*
2. Instrumentation tube connection	-	-	*Yes*	-
3. Main nozzles	*Yes*	*Yes*[c]	-	*Yes*
4. Cladding	-	*Yes*[b]	*Yes*	-
5. Nozzle to safe ends weld	*Yes*	-	-	*Yes*
6. Nozzle to safe ends weld overlay (Unit 2)	*Yes*	*Yes*[c]	*Yes*	-
7. All ferritic welds accessible after hydrotest	-	-	-	*Yes*
8. All nonferritic welds accessible after hydrotest	-	-	*Yes*	-
9. Seal ledge	-	-	-	*Yes*
10. Head lift lugs	-	-	-	*Yes*
11. Core pads welds	-	*Yes*	*Yes*	*Yes*
12. CRDM and Thermocouple Nozzle Connections	-	-	*Yes*	-
13. RVHVS and RVLIS Nozzle Connections	-	-	*Yes*	-
14. CRDM Nozzle to Integrated Latch Housing Weld	*Yes*	-	*Yes*	-

(a) RT - Radiographic; UT - Ultrasonic; PT - Dye penetrant; MT - Magnetic particle
(b) UT of cladding bond-to-base metal
(c) UT after hydrotest

TABLE 5.5-1

REACTOR COOLANT PUMP DESIGN PARAMETERS (BOTH UNITS)

Design pressure, psig	2,485
Design temperature, °F	650
Capacity per pump, gpm	88,500
Developed head, ft	277
NPSH required, ft	170
Suction temperature, °F	545
RPM nameplate rating	1,180
Discharge nozzle, ID, in.	27-1/2
Suction nozzle, ID, in.	31
Overall unit height, ft-in.	28-6.7
Water volume, ft^3	56
Moment of inertia, ft-lb	82,000
Weight, dry, lb	198,000
Motor	
Type	AC induction single-speed, air-cooled
Power, HP	6,000
Voltage, volts	11,500
Insulation class	B, F or H Thermalastic Epoxy F Megaseal Epoxy
Phase	3
Starting	
Current, amps	1,700
Input (hot reactor coolant), kW	4,371
Input (cold reactor coolant), kW	5,790
Seal water injection, gpm	8
Seal water return, gpm	3

TABLE 5.5-2

HISTORICAL INFORMATION IN ITALICS BELOW NOT REQUIRED TO BE REVISED

REACTOR COOLANT PUMP QUALITY ASSURANCE PROGRAM

	RT[a]	*UT*[a]	*PT*[a]	*MT*[a]
Castings	*Yes*	-	*Yes*	-
Forgings				
1. Main shaft	-	*Yes*	*Yes*	-
2. Main studs	-	*Yes*	*Yes*	-
3. Flywheel (rolled plate)	-	*Yes*	*Yes (for the bore)*	
Weldments				
1. Circumferential	*Yes*	-	*Yes*	-
2. Instrument connections	-	-	*Yes*	-

(a) RT - Radiographic
UT - Ultrasonic
PT - Dye penetrant
MT - Magnetic particle

TABLE 5.5-3

STEAM GENERATOR DESIGN DATA[a]

	Unit 1	Unit 2
Number of steam generators	4	4
Design pressure, reactor coolant/steam, psig	2,485/1085	2,485/1085
Reactor coolant hydrostatic test pressure (tube side-cold), psig	3,107	3,107
Design temperature, reactor coolant/steam, °F	650/600	650/600
Reactor coolant flow, (per SG) lb/hr	33.2×10^6	33.5×10^6
Total heat transfer surface area, ft^2	54,240	54,240
Heat transferred, Btu/hr	$2,922 \times 10^6$	$2,922 \times 10^6$
Steam conditions at full load		
Outlet nozzle:		
Steam flow, lb/hr	3.7×10^6	3.7×10^6
Steam temperature, °F	504.3/521.2	504.5/521.7
Steam pressure, psia	708/821	709/825
Maximum moisture carryover, wt %	0.05	0.05
Feedwater, temperature, °F	425/435	425/435
Overall height, ft-in.	68-2	68-2
Shell OD, upper/lower, in.	175-3/8 /135-3/8	175-3/8/135-3/8
Number of U-tubes[b]	4,444	4,444
U-tube outer diameter, in.	0.75	0.75
Tube wall thickness, (minimum), in.	0.043	0.043
Number of manways/ID, in.	4/18	4/18
Number of handholes/ID, in.	4/6	4/6
Number of inspection ports/ID, in.	8/2.5	8/2.5
Number of tube upper bundle inspection ports/ID, in.	2/4	2/4

TABLE 5.5-3

	Rated Load	
	Unit 1	Unit 2
Reactor coolant water volume, ft^3	1022.3	1022.3
Primary side fluid heat content, Btu	2.634×10^7	2.635×10^7
Secondary side water volume, ft^3	2122	2125
Secondary side steam volume, ft^3	3679	3677
Secondary side fluid heat content, Btu	5.97×10^7	5.98×10^7

(a) Quantities are for each steam generator.

(b) The actual number of “active” tubes (i.e., those contributing to the heat transfer surface area) may be less than the number given due to the plugging and/or removal of some tubes.

TABLE 5.5-5

HISTORICAL INFORMATION IN ITALICS BELOW NOT REQUIRED TO BE REVISED

STEAM GENERATOR QUALITY ASSURANCE PROGRAM
(BOTH UNITS)

	RT[a]	*UT*[a]	*PT*[a]	*MT*[a]	*ET*[a]
Tubesheet					
1. Forging	-	*Yes*	-	*Yes*	-
2. Cladding	-	*Yes*[b]	*Yes*	-	-
Channel Head					
1. Forging		*Yes*	-	*Yes*	-
2. Cladding	-	*Yes*	*Yes*	-	-
Secondary Shell and Head					
1. Forgings	-	*Yes*	-	*Yes*	-
Tubes	-	*Yes*	-	-	*Yes*
Nozzles (Forging)	-	*Yes*	-	*Yes*	-
Weldments					
1. Shell, circumferential	*Yes*	*Yes* [d]	-	*Yes*	-
2. Cladding, (channel head-tubesheet joint cladding restoration)	-	*Yes*	*Yes*	-	-
3. Feedwater nozzle to shell	*Yes*	-	-	*Yes*	-
4. Support brackets	-	-	-	*Yes*	-
5. Tube to tubesheet	-	-	*Yes*	-	-
6. Instrument connections (primary and secondary)	-	-	-	*Yes*	-
7. Temporary attachments	-	-	-	*Yes*	-

TABLE 5.5-5

	RT[a]	UT[a]	PT[a]	MT[a]	ET[a]
after removal					
Weldments (Cont'd)					
8. After hydrostatic test (all welds where accessible)	-	-	-	Yes	-
9. Primary nozzle safe ends	Yes	Yes	Yes	-	-
10. Steam nozzle safe ends	Yes	-	-		-
11. Feedwater nozzle safe ends	Yes	Yes	Yes	-	-

(a) RT - Radiographic
UT - Ultrasonic
PT - Dyepenetrant
MT - Magnetic particle
ET - Eddy current

(b) Flat surfaces only

(c) Weld deposit areas only

(d) Welds subject to ASME Section XI ISI

TABLE 5.5-6

REACTOR COOLANT PIPING DESIGN PARAMETERS (BOTH UNITS)

Reactor inlet piping, ID, in.	27.5
Reactor inlet piping, nominal/min wall thickness, in.	2.38/2.22
Reactor outlet piping, ID, in.	29
Reactor outlet piping, nominal/min wall thickness, in.	2.50/2.33
Coolant pump suction piping, ID, in.	31
Coolant pump suction piping, nominal/min wall thickness, in.	2.63/2.50
Pressurizer surge line piping, Unit 1/Unit 2 ID, in.	11.50/11.19
Pressurizer surge line piping, Unit 1/Unit 2 nominal wall thickness, in.	1.25/1.41
Water volume, all loops and surge line, ft^3	1500
Design/operating pressure, psig	2485/2235
Design temperature, °F	650
Design temperature (pressurizer surge line) °F	680
Design pressure, pressurizer relief line	From pressurizer to safety valve, 2485 psig, 680° F
Design temperature, pressurizer relief lines	From safety valve to pressurizer relief tank, 600 psig, 450°F

TABLE 5.5-7

HISTORICAL INFORMATION IN ITALICS BELOW NOT REQUIRED TO BE REVISED

REACTOR COOLANT PIPING QUALITY ASSURANCE PROGRAM (BOTH UNITS)

	RT[a]	*UT*[a]	*PT*[a]
Fittings and Pipe (Castings)	*Yes*	*-*	*Yes*
Fittings and Pipe (Forgings)	*-*	*Yes*	*Yes*
Weldments			
1. Circumferential	*Yes*	*-*	*Yes*
2. Nozzle to piperun (except no RT for nozzles less than 4 inches)	*Yes*	*-*	*Yes*
3. Instrument connections	*-*	*-*	*Yes*

(a) RT - Radiographic
UT - Ultrasonic
PT - Dye penetrant

TABLE 5.5-8

DESIGN BASES FOR RESIDUAL HEAT REMOVAL SYSTEM OPERATION
(BOTH UNITS)

Residual heat removal system startup	No sooner than 4 hours after reactor shutdown
Number of Trains in Operation	2
Reactor coolant system initial pressure, psig	390
Reactor coolant system initial temperature, °F	350
Component cooling water design temperature, °F	95
Cooldown time, hours after reactor shutdown	<20
Reactor coolant system temperature at end of cooldown, °F	140
Decay heat generation used in cooldown analysis, Btu/hr	75.5×10^6

TABLE 5.5-9

RESIDUAL HEAT REMOVAL SYSTEM CODES AND CLASSIFICATIONS
(BOTH UNIT 1 and UNIT 2)

Components		Code
Residual heat removal pump		Draft ASME Code for Pumps and Valves for Nuclear Power-1968, Class II
Residual heat exchanger	(tube side)	ASME BPVC Section III-1968, Class C
	(shell side)	ASME BPVC Section VIII-1968
Piping		ANSI B31.7-1969 with 1970 Addendum, Class II for PG&E Design Class I portions
		ANSI B31.1-1967 with 1970 Addendum for non-PG&E Design Class I portions
Valves		ANSI B16.5-1968

TABLE 5.5-10

RESIDUAL HEAT REMOVAL SYSTEM COMPONENT DATA
(BOTH UNITS)

Residual Heat Removal Pump	
Number	2 (per unit)
Design pressure, psig	700
Design temperature, °F	400
Design flow, gpm	3000
Design head, ft	350
Net positive suction head, ft	
Available	36.3
Required	11.0
Residual Heat Exchanger	
Number	2 (per unit)
Design heat removal capacity, Btu/hr	34.15×10^6

	Tube-side	Shell-side
Design pressure, psig	630	150
Design temperature, °F	400	250
Design flow, lb/hr	1.48×10^6	2.48×10^6
Inlet temperature, °F	137	95
Outlet temperature, °F	114	108.8
Material	Austenitic stainless steel	Carbon steel
Fluid	Reactor coolant	Component cooling water

TABLE 5.5-10

Piping and Valves	
Design pressure, psig	2485[(a)]
Design temperature, °F	650[(a)]
Design pressure, psig	700
Design temperature, °F	400
Suction side relief valve	
Relief pressure, psig	450
Relief capacity, gpm	900
Discharge side relief valve	
Relief pressure, psig	600
Relief capacity, gpm	20
Material	Austenitic stainless steel

(a) Valves and piping that are part of the reactor coolant pressure boundary.

TABLE 5.5-11

RECIRCULATION LOOP LEAKAGE

Items	No. of Units	Type of Leakage Control and Unit Leakage Rate Used in the Analysis	Leakage to Atmosphere, cc/hr	Leakage to Drain Tank, cc/hr
Residual heat removal pumps (low-head safety injection)	2	Mechanical seal with leakoff of one drop/min	20	0
Centrifugal charging pump (CCP1 and CCP2)	2	Same as residual heat removal pump	40	0
Safety injection	2	Same as residual heat removal pump	40	0
Flanges:				
a. Pump	12	Gasket-adjusted to zero leakage following any test	0	0
b. Valves bonnet body (larger than 2 in.)	40	10 drops/min/flange used in analysis (30 cc/hr)	1200	0
c. Control valves	6		180	0
d. Heat exchangers	2		240	0
Valves - stem leakoffs	40	Backseated, double packing with leak-off of 1 cc/hr/in. stem diameter	0	40
Miscellaneous small valves	50	Flanged body packed stems - 1 drop/min used	150	0
Miscellaneous large valves (larger than 2 in.)		Double-packing 1 cc/hr/in. stem diameter	40	0
		TOTALS	1910	40

TABLE 5.5-12

PRESSURIZER DESIGN DATA

Design/operating pressure, psig	2485/2235
Hydrostatic test pressure (cold), psig	3107
Design/operating temperature, °F	680/653
Water volume, full power, ft^3	1080
Steam volume, full power, ft^3	720
Surge line nozzle diameter, in.	14
Shell ID, in.	84
Electric heaters capacity, kW[(a)]	1800
Heatup rate of pressurizer using heaters only, °F/hr	55
Maximum spray rate, gpm	800

(a) Initial heater capacity limit; 150 kW is the minimum required capacity for each backup group that can be supplied by emergency vital power (2 groups).

TABLE 5.5-13

HISTORICAL INFORMATION IN ITALICS BELOW NOT REQUIRED TO BE REVISED

PRESSURIZER QUALITY ASSURANCE PROGRAM (BOTH UNITS)

Heads	*RT*[a]	*UT*[a]	*PT*[a]	*MT*[a]	*ET*[a]
1. Plates	*Yes*	-	-	*Yes*	-
2. Cladding	-	-	*Yes*	-	-
Shell					
1. Plates	-	*Yes*	-	*Yes*	-
2. Cladding	-	-	*Yes*	-	-
Heaters					
1. Tubing[b]	-	*Yes*	*Yes*	-	-
2. Center of element	-	-	-	-	*Yes*
Nozzle	-	*Yes*	*Yes*	-	-
Weldments					
1. Shell, longitudinal	*Yes*	-	-	*Yes*	-
2. Shell, circumferential	*Yes*	-	-	*Yes*	-
3. Cladding	-	-	*Yes*	-	-
4. Nozzle safe end (forging)	*Yes*	-	*Yes*	-	-
5. Instrument connections	-	-	*Yes*	-	-
6. Support skirt	-	-	-	*Yes*	-
7. Temporary attachments after removal	-	-	-	*Yes*	-
8. All welds and plate heads after hydrostatic test	-	-	-	*Yes*	-
Final Assembly					
1. All accessible exterior surfaces after hydrostatic test	-	-	-	*Yes*	-

(a) RT - Radiographic; UT - Ultrasonic; PT - Dye penetrant; MT - Magnetic particle; ET - Eddy current
(b) Or a UT and ET

TABLE 5.5-14

PRESSURIZER RELIEF TANK DESIGN DATA

Design pressure, psig	100
Rupture disk release pressure, psig	100 ± 5%
Design temperature, °F	340
Total rupture disk relief capacity lb/hr at 100 psig	1.6×10^6

TABLE 5.5-15

REACTOR COOLANT SYSTEM BOUNDARY VALVE DESIGN PARAMETERS

Design pressure, psig	2485
Nominal operating pressure, psig	2235
Preoperational plant hydrotest, psig	3107
Design temperature, °F	650

TABLE 5.5-16

PRESSURIZER VALVES DESIGN PARAMETERS

Pressurizer Spray Control Valves	
Number	2
Design pressure	2485
Design temperature, °F	650
Design flow for valves full open, each, gpm	400
Pressurizer Safety Valves	
Number	3
Maximum relieving capacity, ASME rated flow, lb/hr (per valve)	420,000
Set pressure, psig	2485
Fluid	Saturated steam
Backpressure:	
Normal, psig	3 to 5
Expected during discharge, psig	350
Pressurizer Operated Power Relief Valves[(a)]	
Number	3
Design pressure, psig	2485
Design temperature, °F	650
Relieving capacity at 2,350 psig, lb/hr (per valve)	210,000
Fluid	Saturated steam

(a) PORVs are credited with liquid discharge for spurious operation of the safety injection system at power events (refer to Section 15.2.15).

TABLE 5.5-17

REACTOR VESSEL HEAD VENT SYSTEM EQUIPMENT DESIGN PARAMETERS

Valves	
Number (includes six manual valves)	10
Design pressure, psig	2485
Design temperature, °F	650
Piping	
Vent line, nominal diameter, in.	1
Design pressure, psig	2485
Design temperature, °F	650

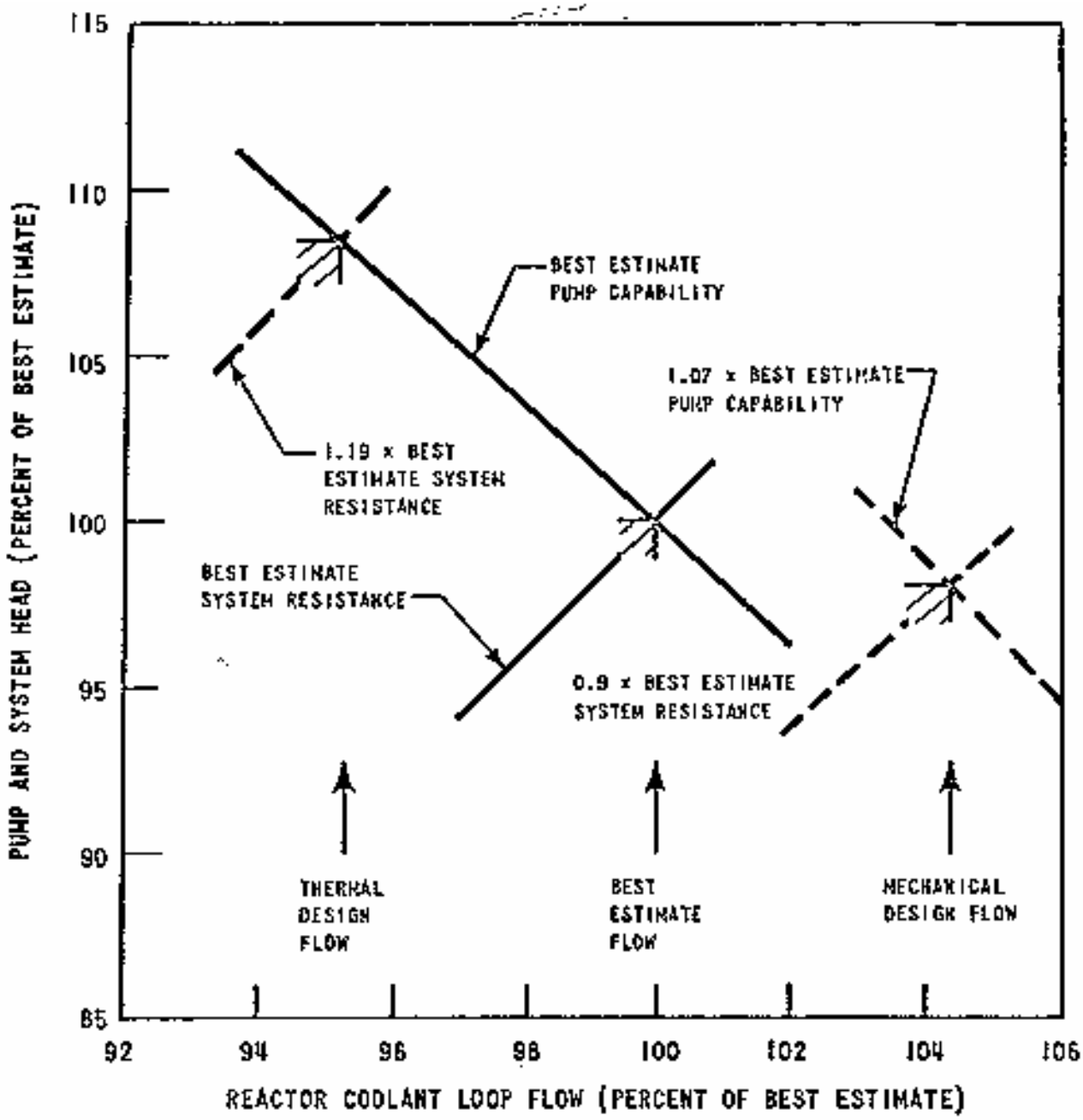

This figure depicts information utilized in the original plant design and is not intended to be updated. For current plant information, refer to Figure 5.1-2A.

FSAR UPDATE
UNITS 1 AND 2 DIABLO CANYON SITE
FIGURE 5.1-2 PUMP HEAD - FLOW CHARACTERISTICS

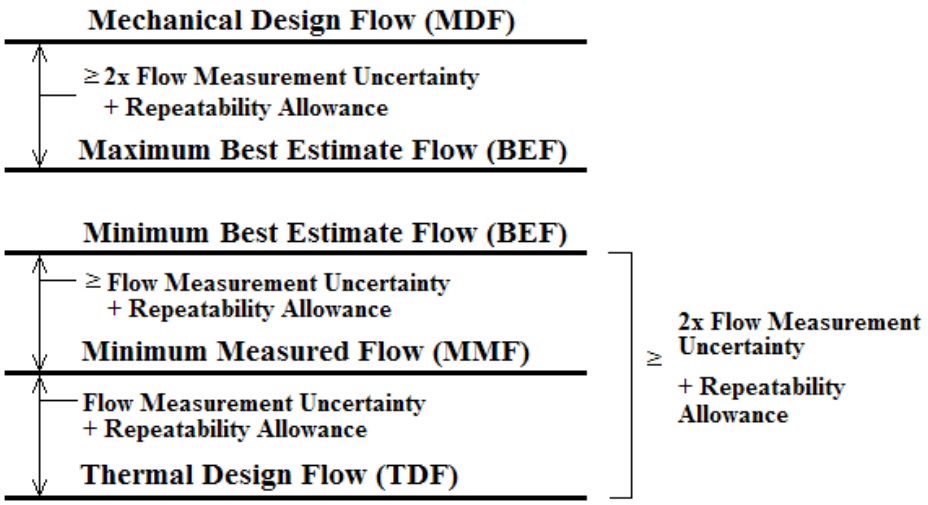

FSAR UPDATE
UNITS 1 and 2 DIABLO CANYON SITE
FIGURE 5.1-2A SAFETY ANALYSIS- RCS FLOW PARAMETERS

Revision 22 May 2015

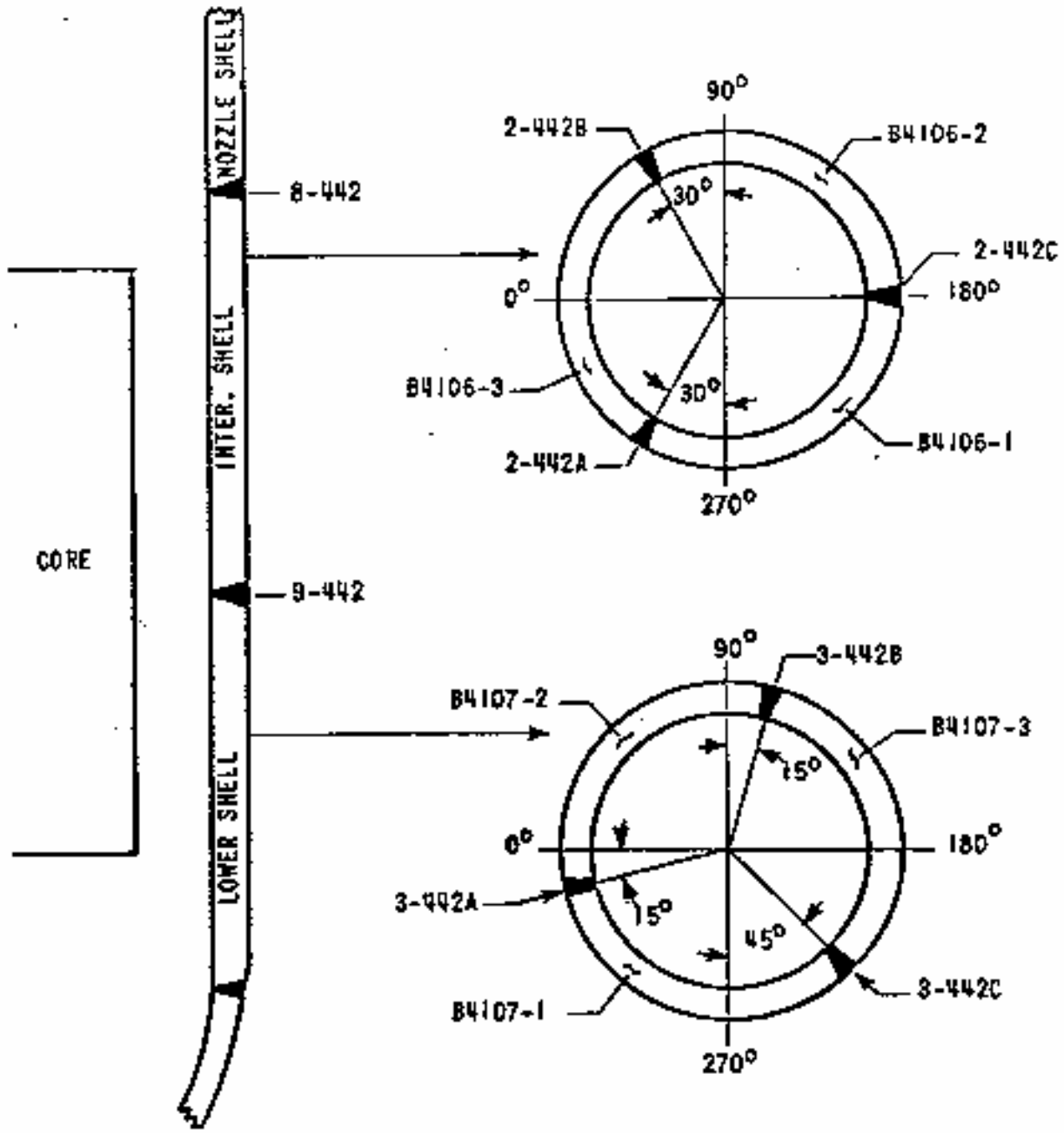

FSAR UPDATE
UNIT 1 DIABLO CANYON SITE
FIGURE 5.2-1 IDENTIFICATION AND LOCATION OF BELTLINE REGION MATERIALS FOR THE REACTOR VESSEL

Revision 11 November 1996

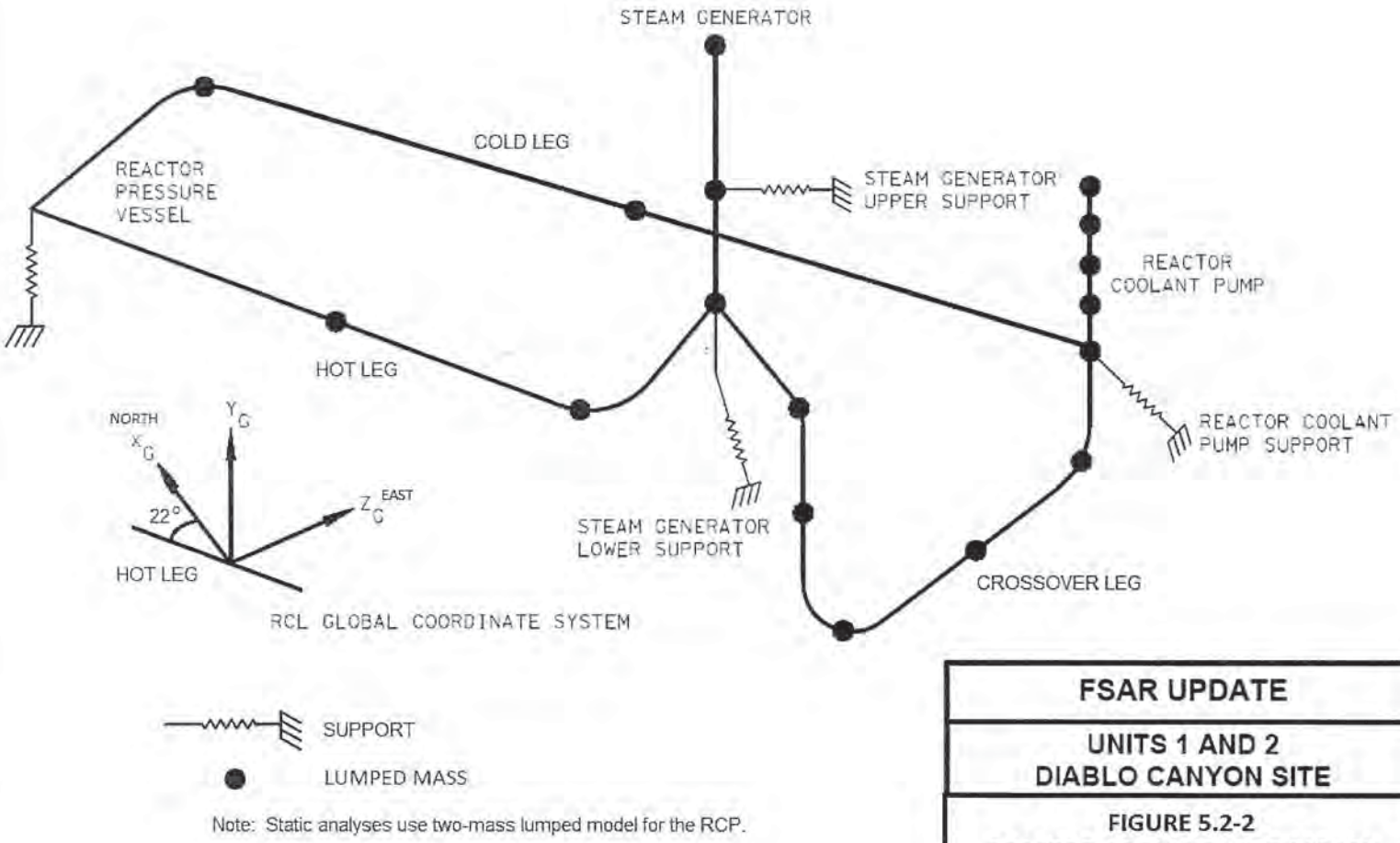

Note: Static analyses use two-mass lumped model for the RCP.

FSAR UPDATE

UNITS 1 AND 2
DIABLO CANYON SITE

FIGURE 5.2-2
REACTOR COOLANT LOOP MODEL FOR STATIC AND LOCA

Revision 24 September 2018

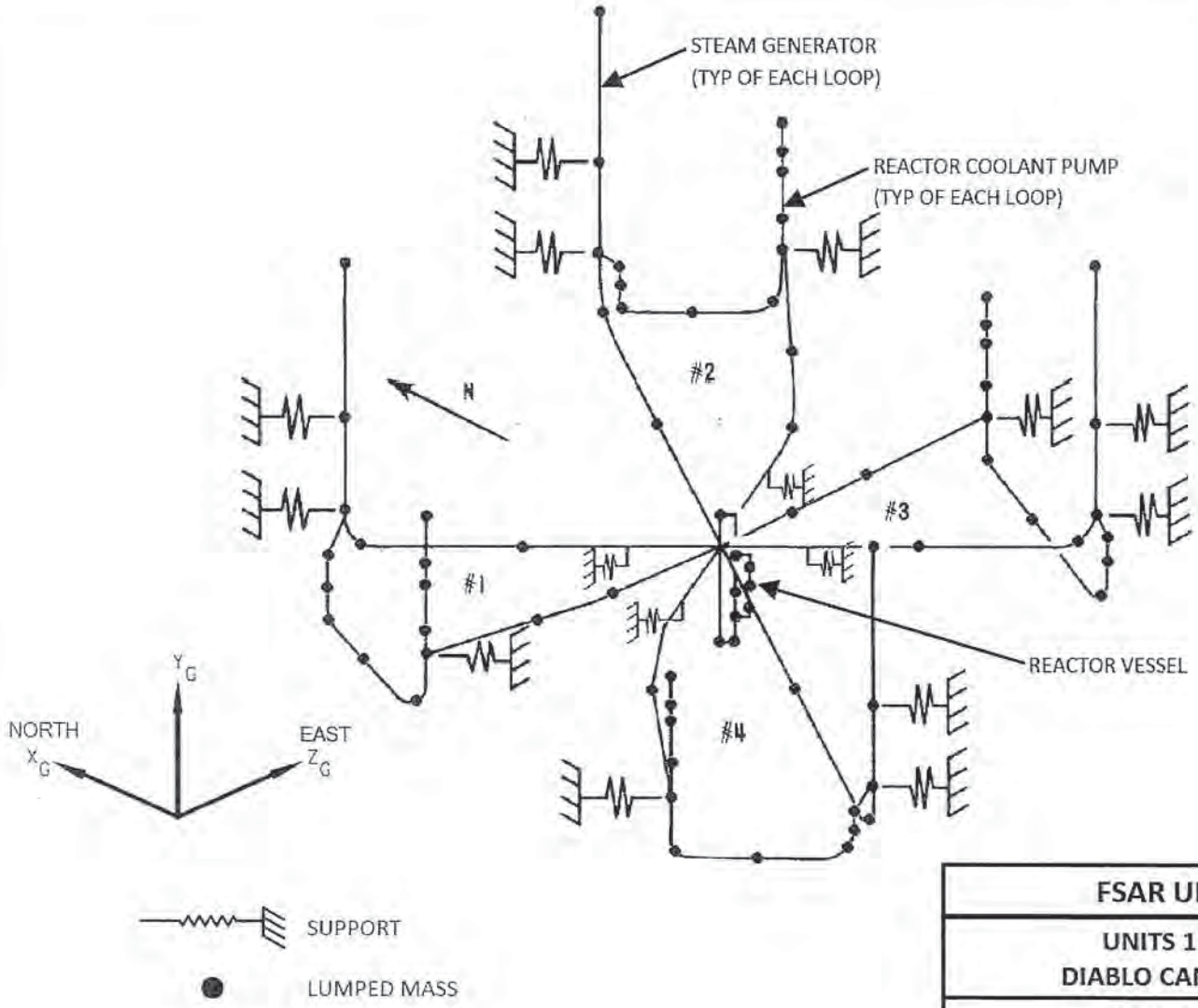

FSAR UPDATE
UNITS 1 AND 2 DIABLO CANYON SITE
FIGURE 5.2-2A REACTOR COOLANT 4-LOOP MODEL

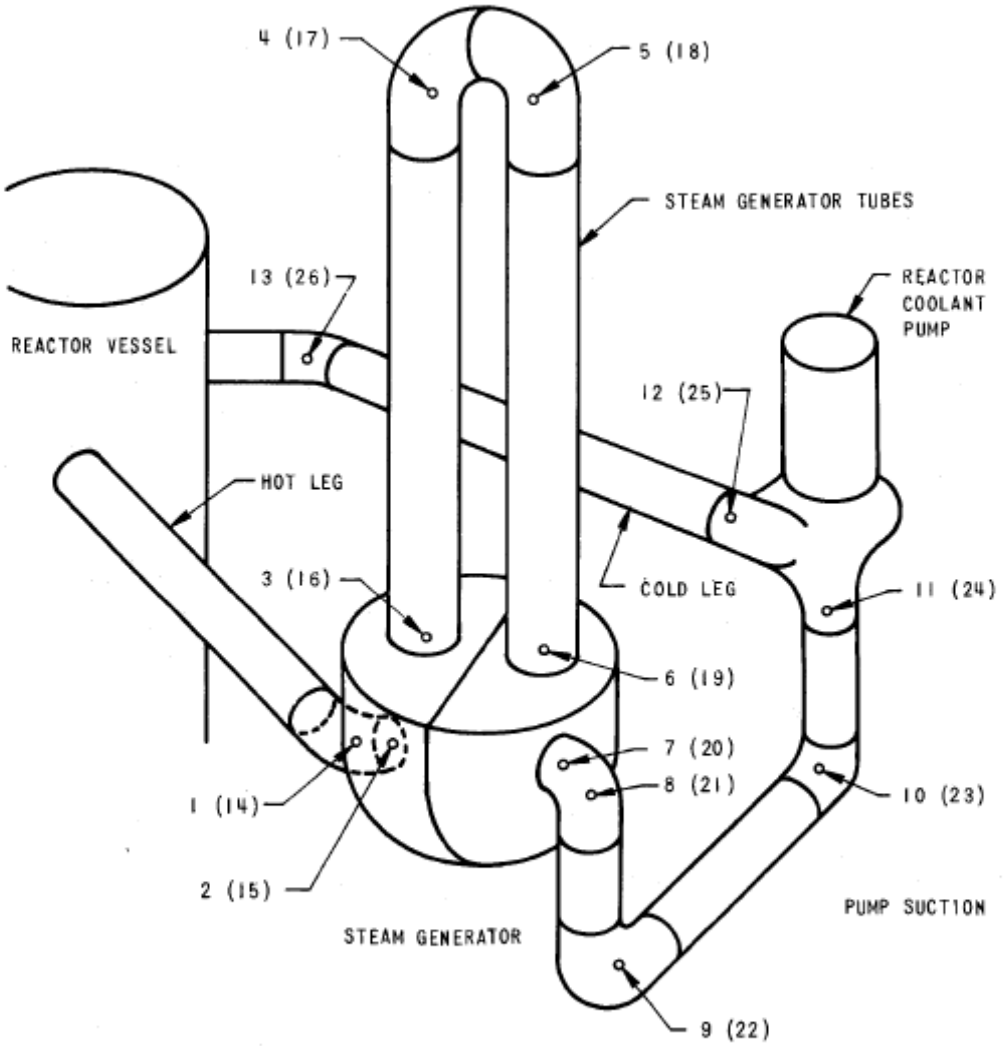

X - BROKEN LOOP FORCE NODES

(X) - UNBROKEN LOOP FORCE NODES

FSAR UPDATE
UNITS 1 AND 2 DIABLO CANYON SITE
FIGURE 5.2-3 THRUST RCL MODEL SHOWING HYDRAULIC FORCE LOCATIONS

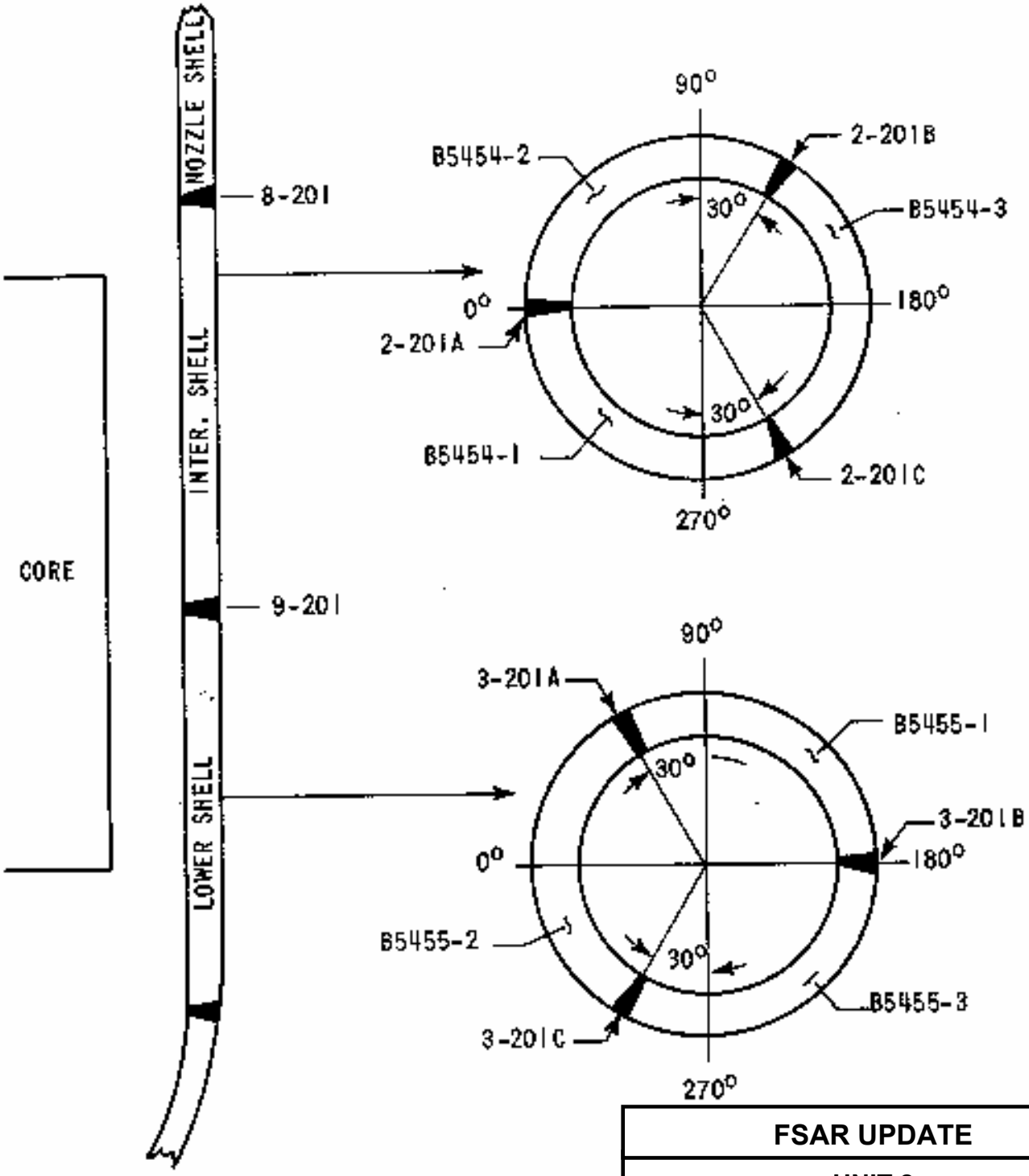

FSAR UPDATE
UNIT 2 DIABLO CANYON SITE
FIGURE 5.2-4 IDENTIFICATION AND LOCATION OF BELTLINE REGION MATERIAL FOR THE REACTOR VESSEL

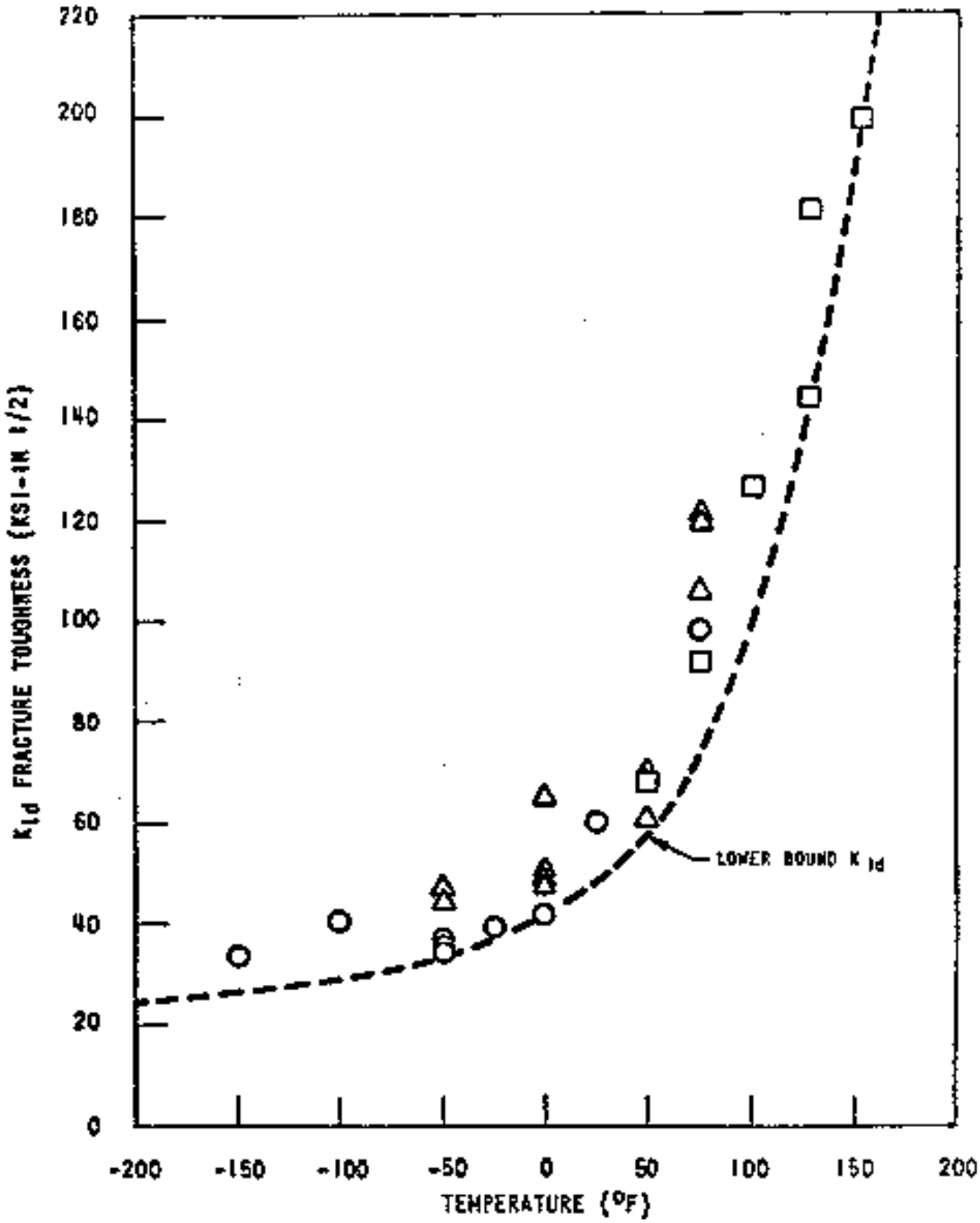

FSAR UPDATE
UNIT 1 DIABLO CANYON SITE
FIGURE 5.2-7 LOWER BOUND FRACTURE TOUGHNESS A533 GRADE B CLASS 1 (REF WCAP-7623)

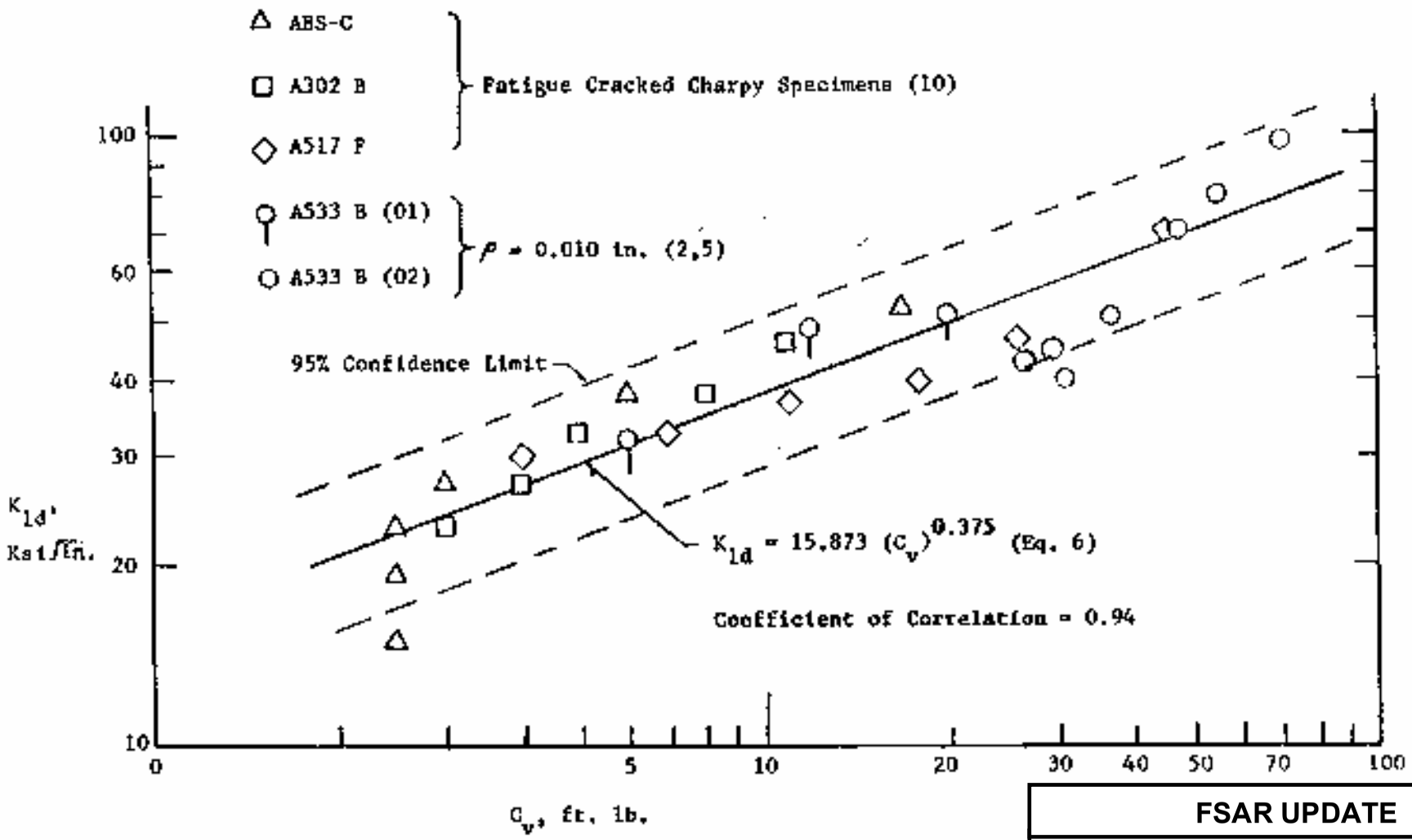

FSAR UPDATE
UNITS 1 AND 2 DIABLO CANYON SITE
FIGURE 5.2-8 TRANSITION TEMPERATURE CORRELATION BETWEEN K_{Id} (DYNAMIC) AND C_v FOR A SERIES OF UNIRRADIAYED STEELS

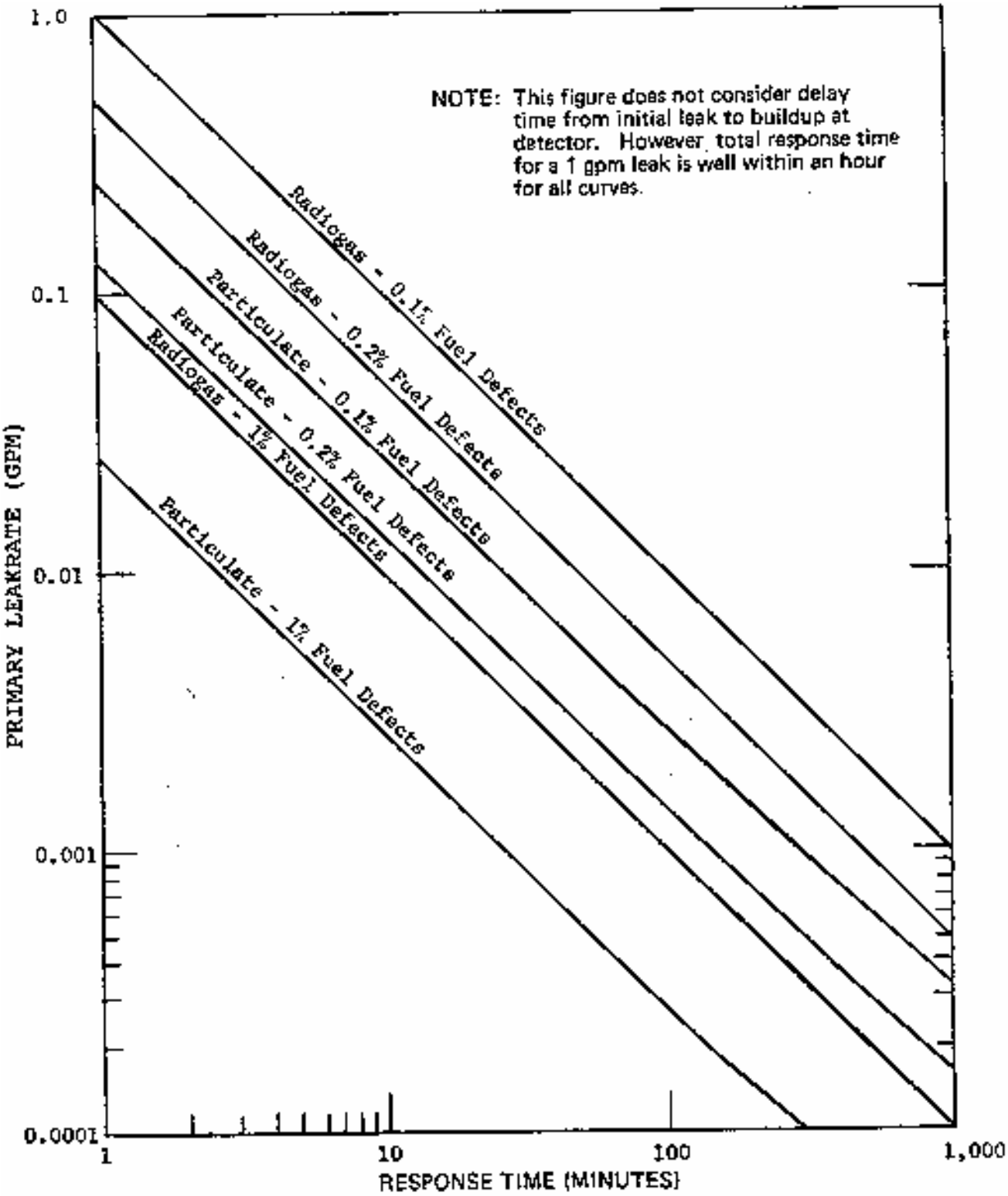

FSAR UPDATE
UNITS 1 AND 2 DIABLO CANYON SITE
FIGURE 5.2-9 CONTAINMENT MONITOR RESPONSE TIME VERSUS PRIMARY LEAKRATE

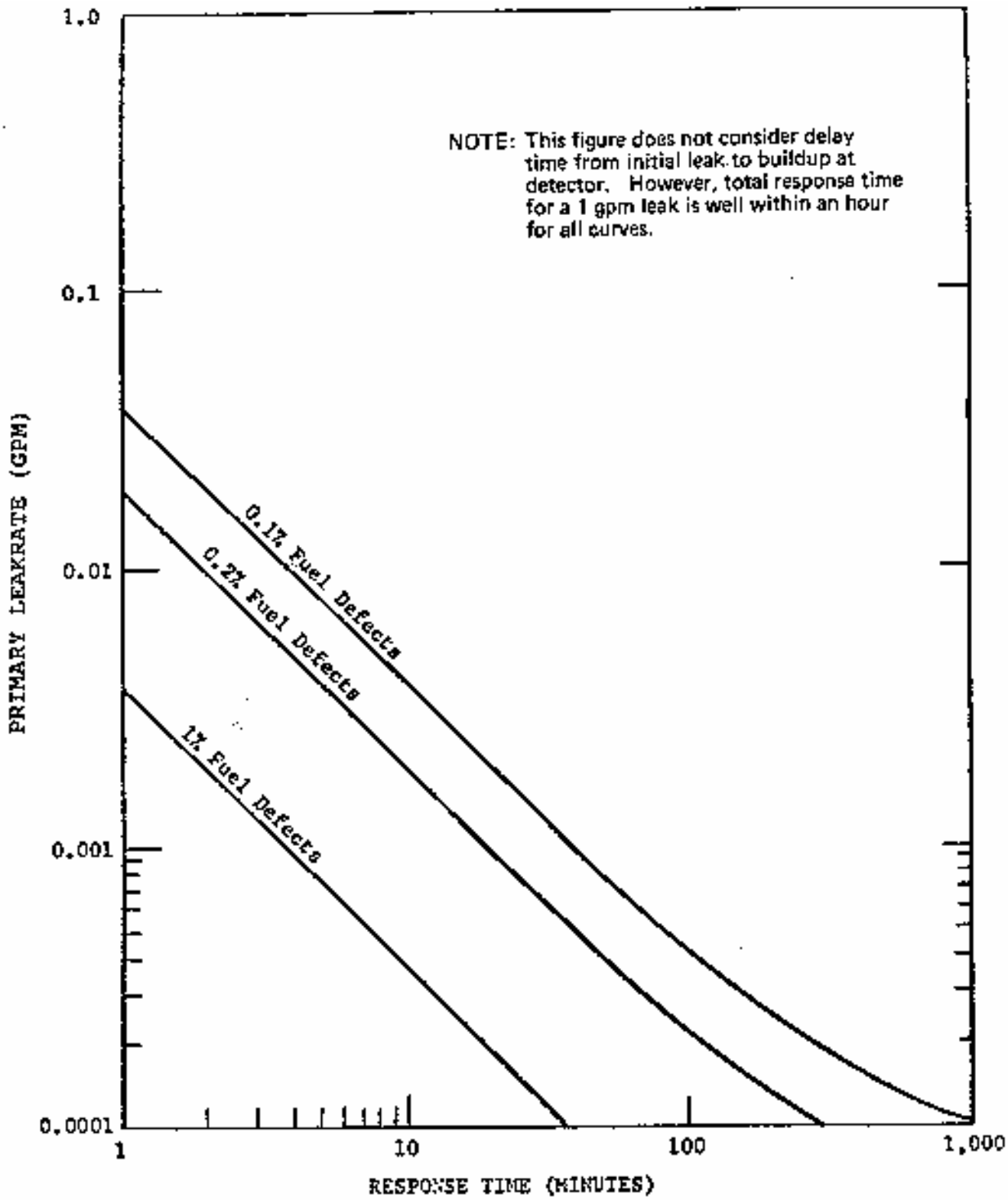

FSAR UPDATE
UNITS 1 AND 2 DIABLO CANYON SITE
FIGURE 5.2-10 AIR EJECTOR RADIOGAS MONITOR RESPONSE TIME VERSUS PRIMARY LEAKRATE

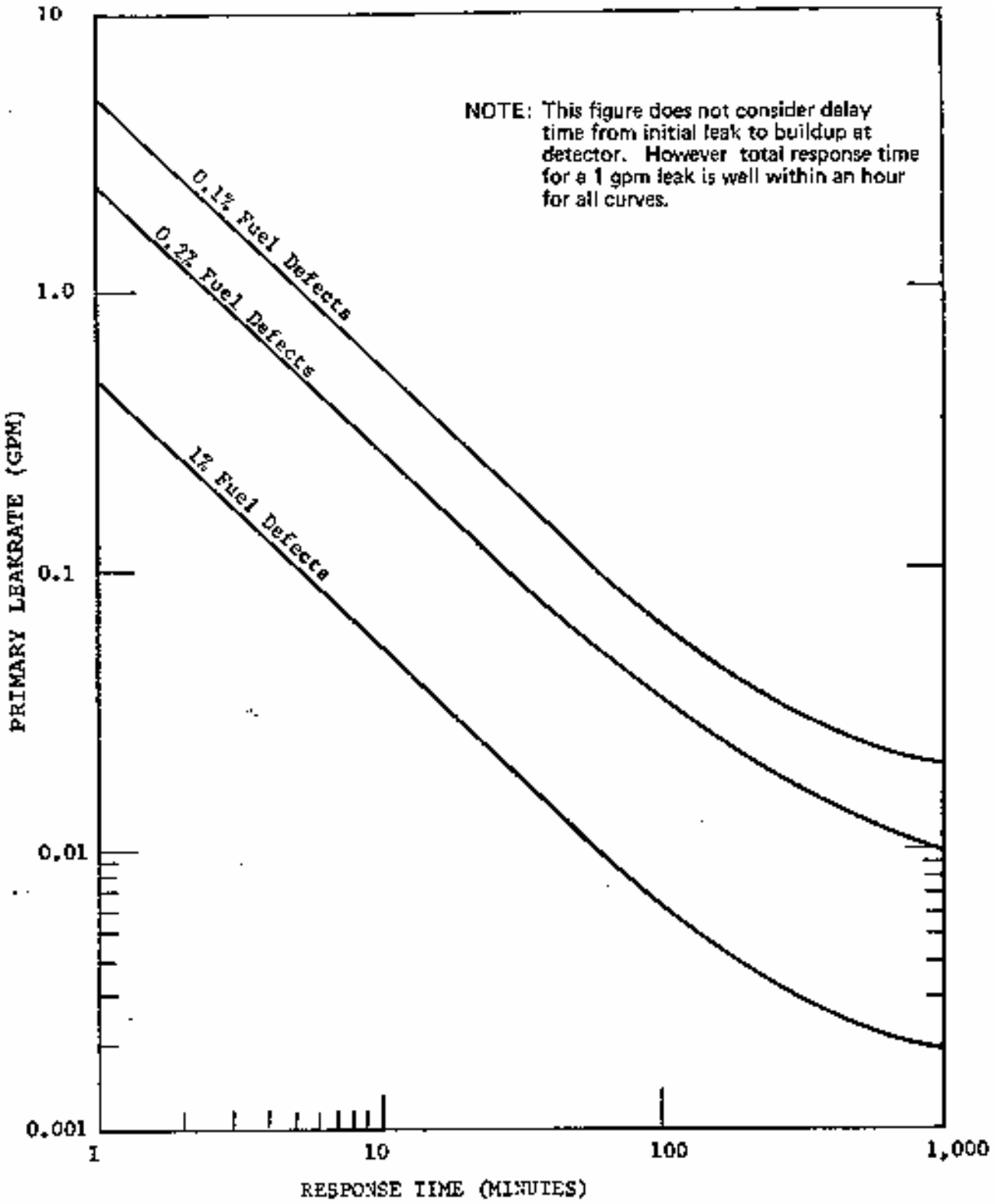

FSAR UPDATE
UNITS 1 AND 2 DIABLO CANYON SITE
FIGURE 5.2-11 BLOWDOWN LIQUID MONITOR RESPONSE TIME VERSUS PRIMARY LEAKRATE

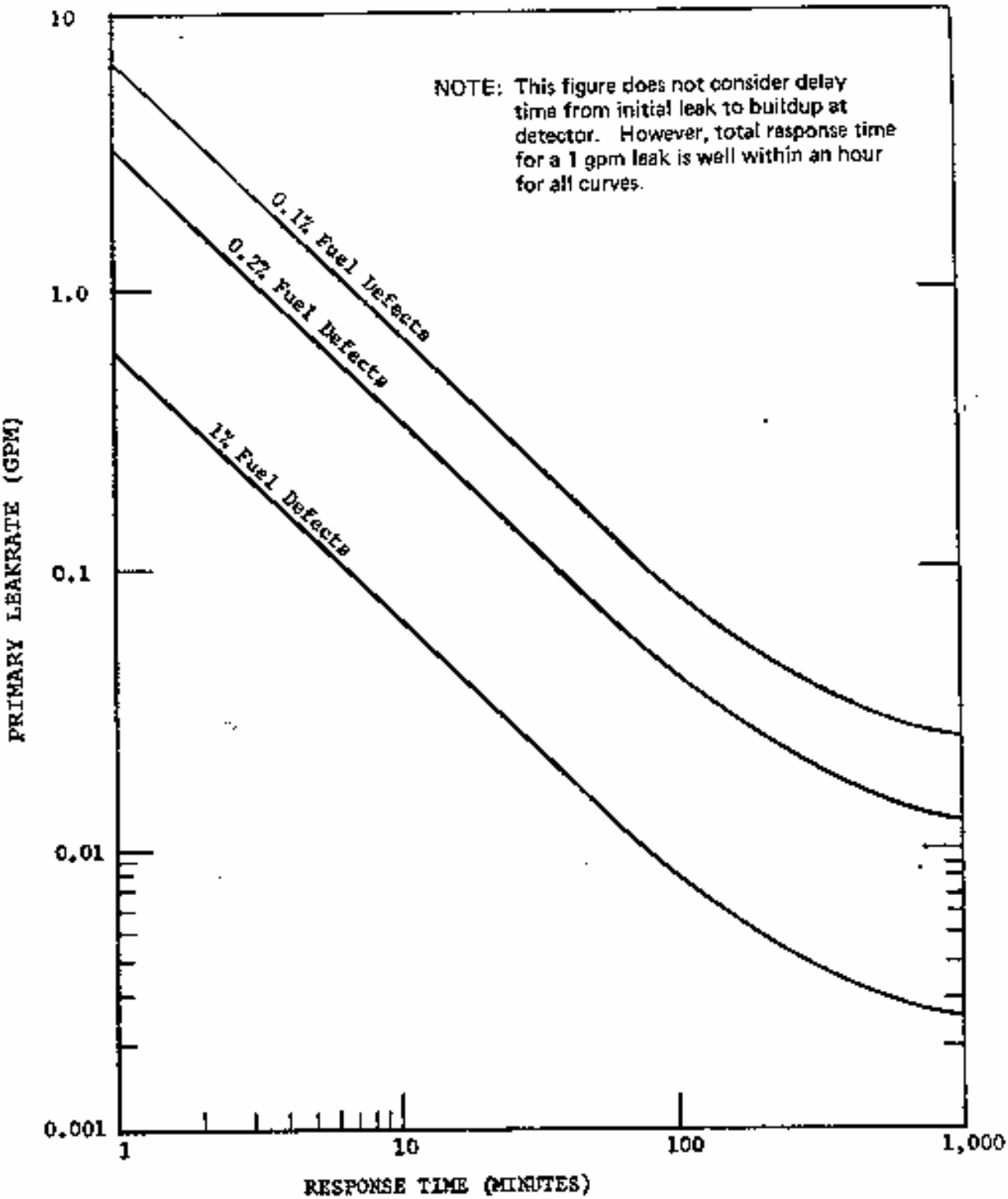

FSAR UPDATE
UNITS 1 AND 2 DIABLO CANYON SITE
FIGURE 5.2-12 CONTAINMENT COOLING WATER LIQUID MONITOR RESPONSE TIME VERSUS PRIMARY LEAKRATE

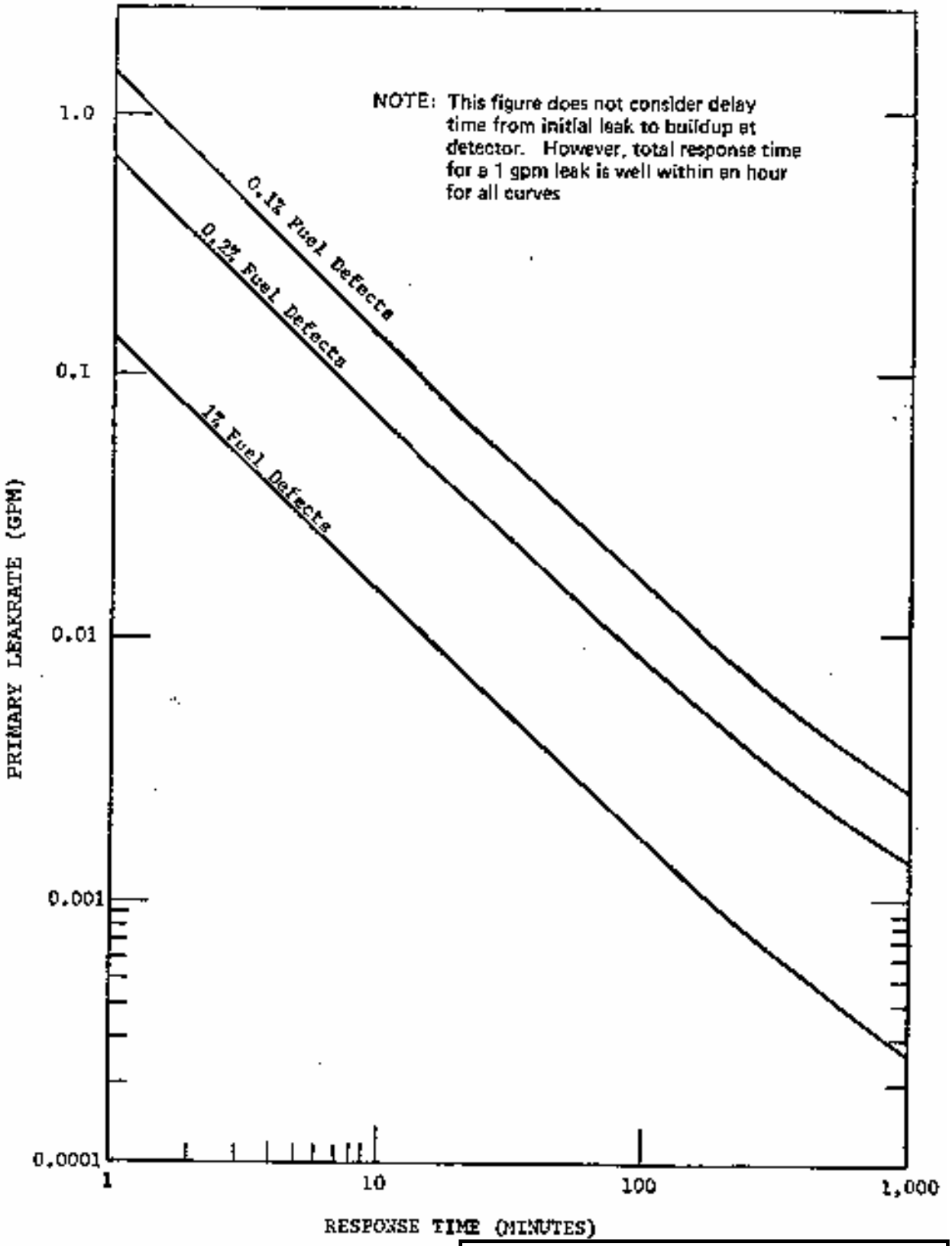

FSAR UPDATE
UNITS 1 AND 2 DIABLO CANYON SITE
FIGURE 5.2-13 CONTAINMENT AREA MONITOR RESPONSE TIME VERSUS PRIMARY LEAKRATE

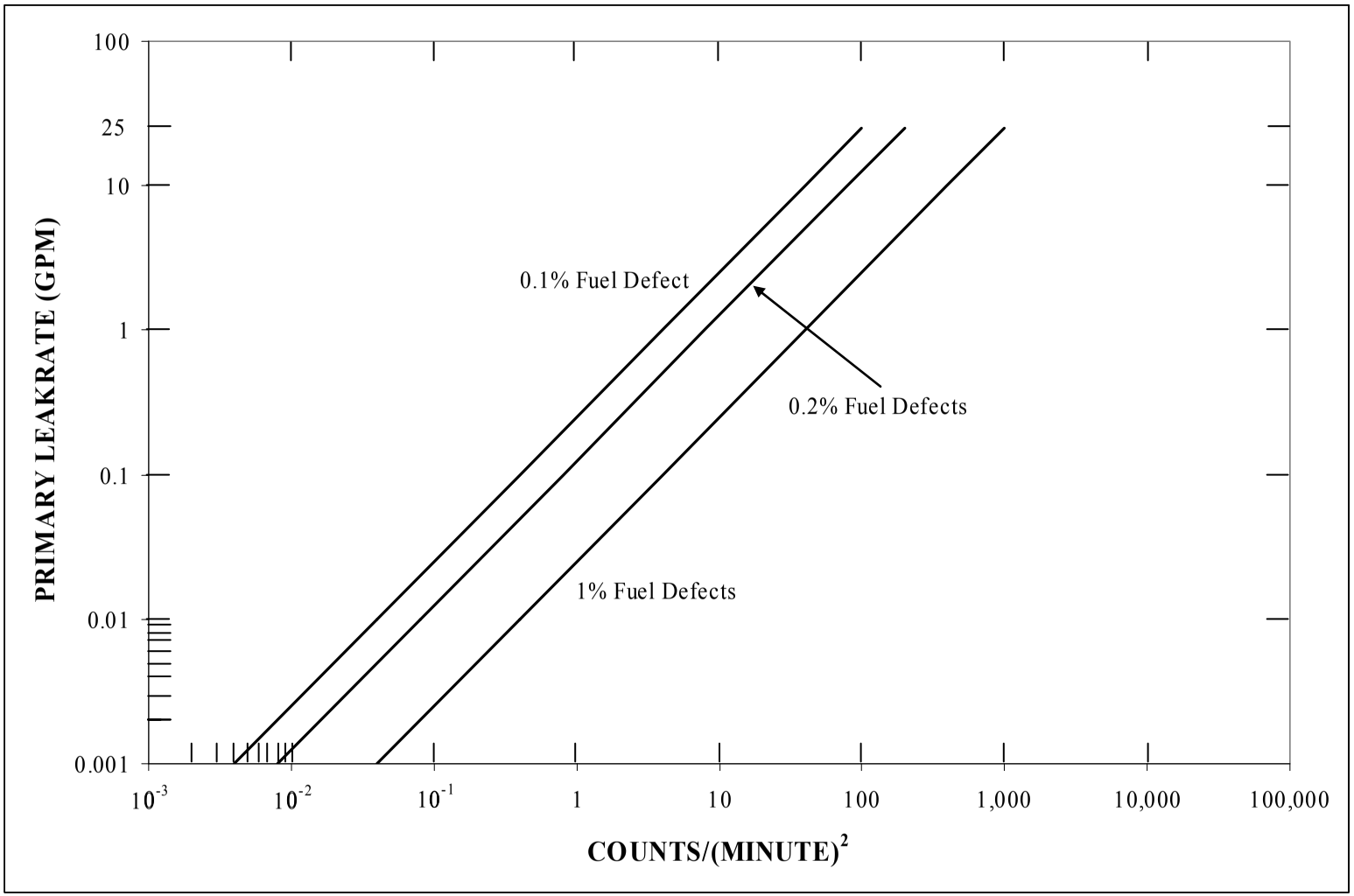

FSAR UPDATE

UNITS 1 AND 2
DIABLO CANYON SITE

FIGURE 5.2-14
CONTAINMENT RADIOGAS MONITOR COUNT RATE VERSES PRIMARY LEAKRATE AFTER EQUILIBRIUM

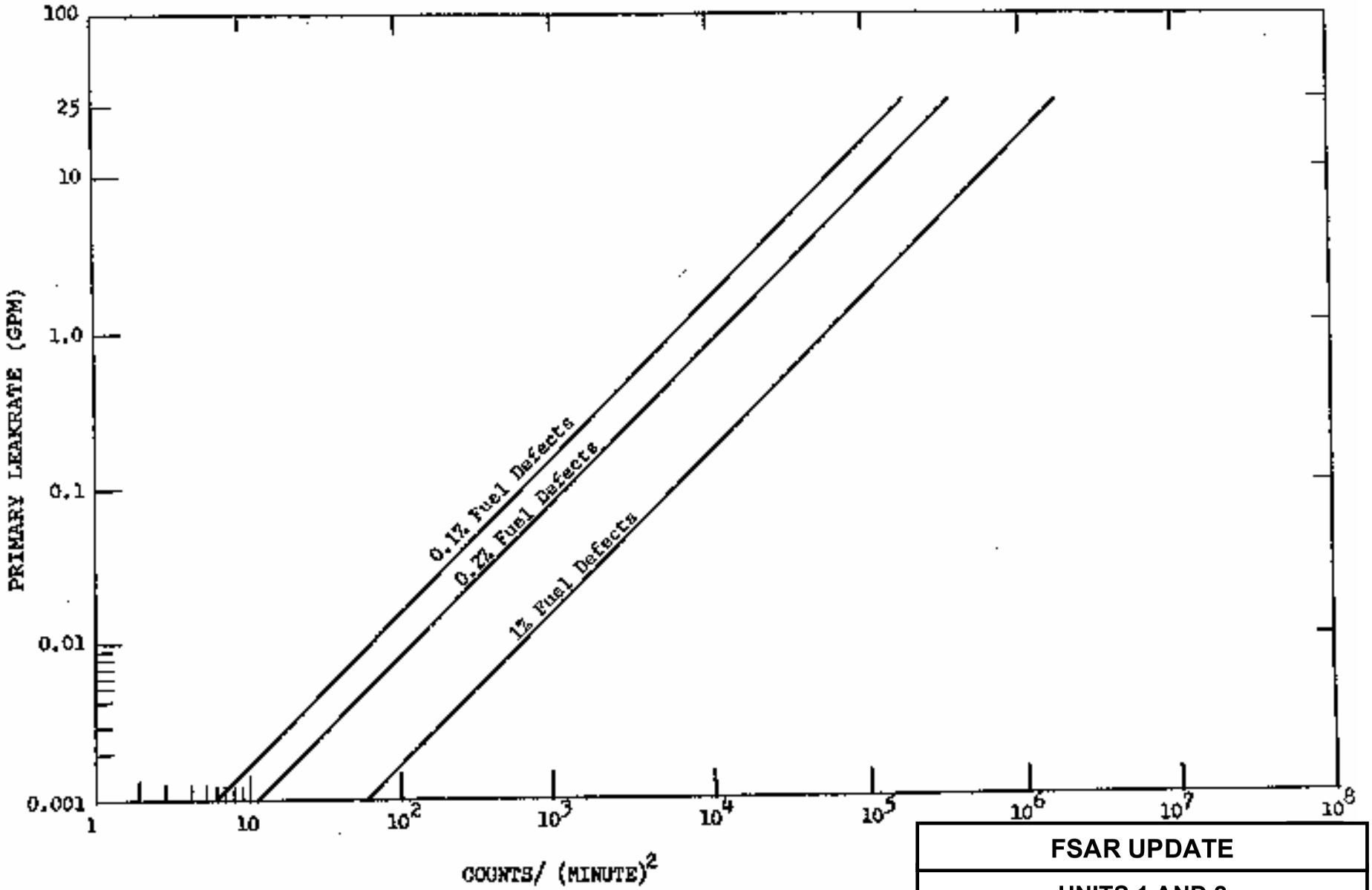

FSAR UPDATE

UNITS 1 AND 2
DIABLO CANYON SITE

FIGURE 5.2-15

CONTAINMENT PARTICULATE MONITOR COUNT RATE VERSUS PRIMARY LEAKRATE AFTER EQUILIBRIUM

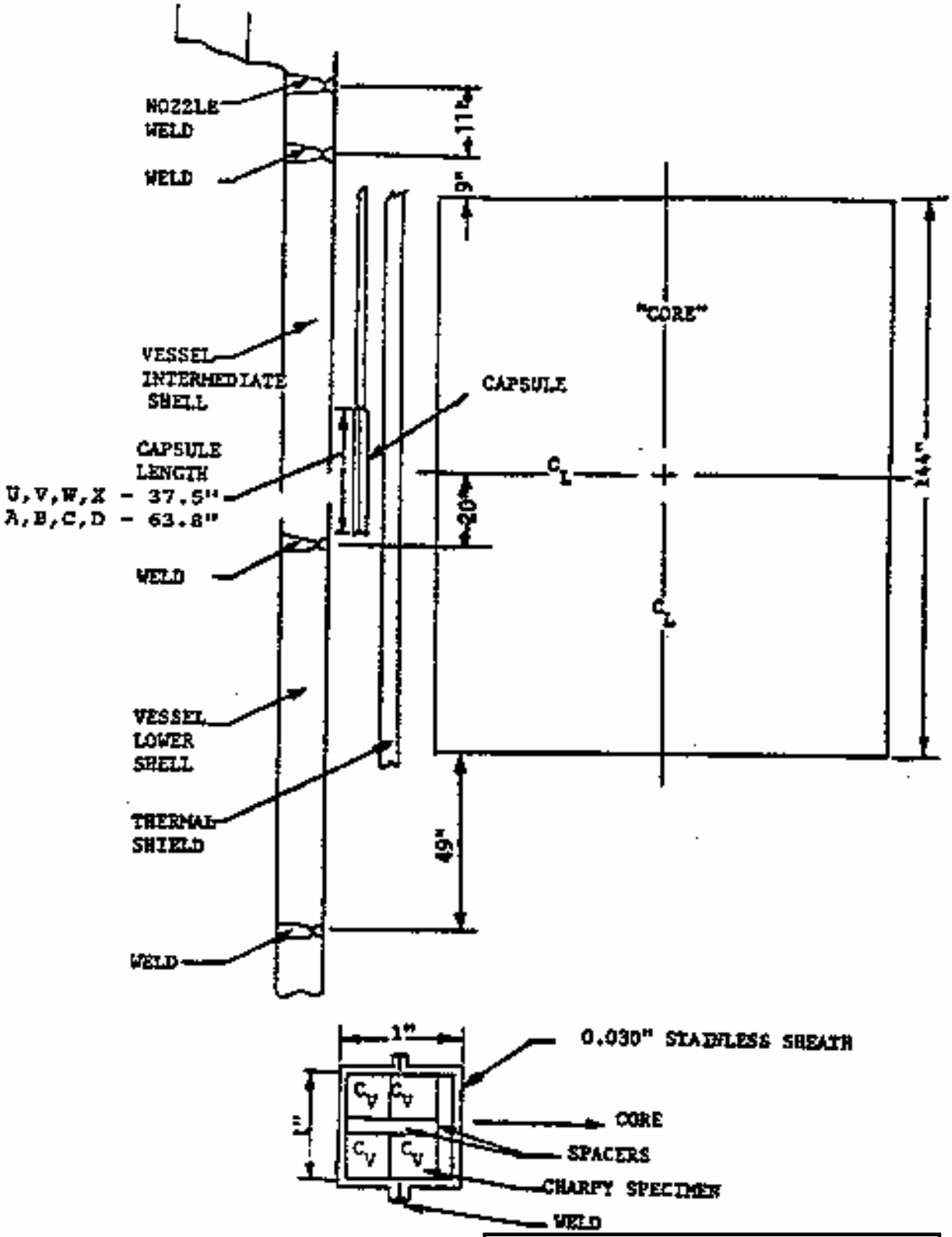

FSAR UPDATE
UNIT 1 DIABLO CANYON SITE
FIGURE 5.2-16 SURVEILLANCE CAPSULE ELEVATION VIEW

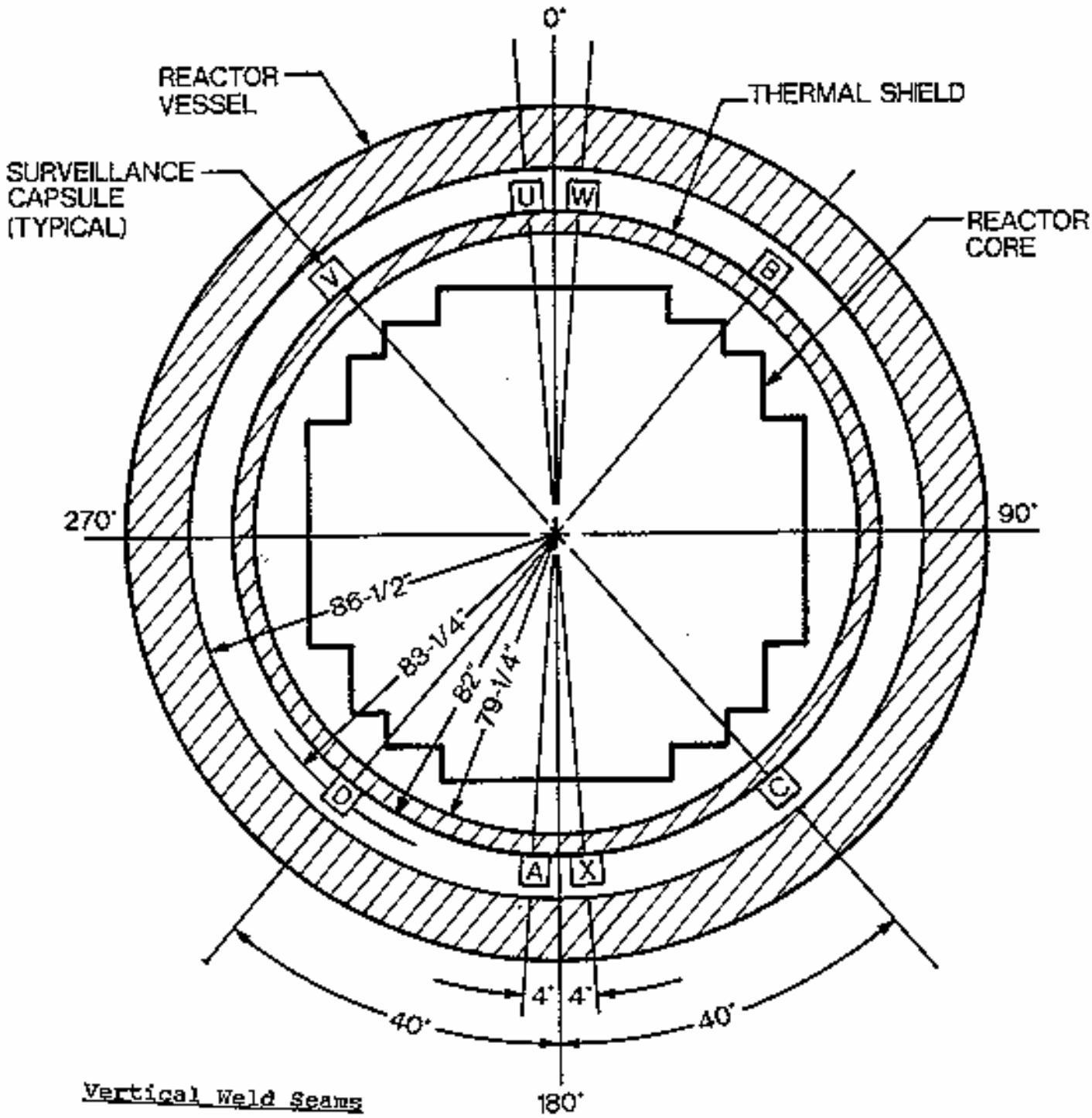

Vertical Weld Seams

Int. Shell 0°, 120°, 240°

Lower Shell 60°, 180°, 300°

FSAR UPDATE
UNIT 1 DIABLO CANYON SITE
FIGURE 5.2-17 SURVEILLANCE CAPSULE PLAN VIEW

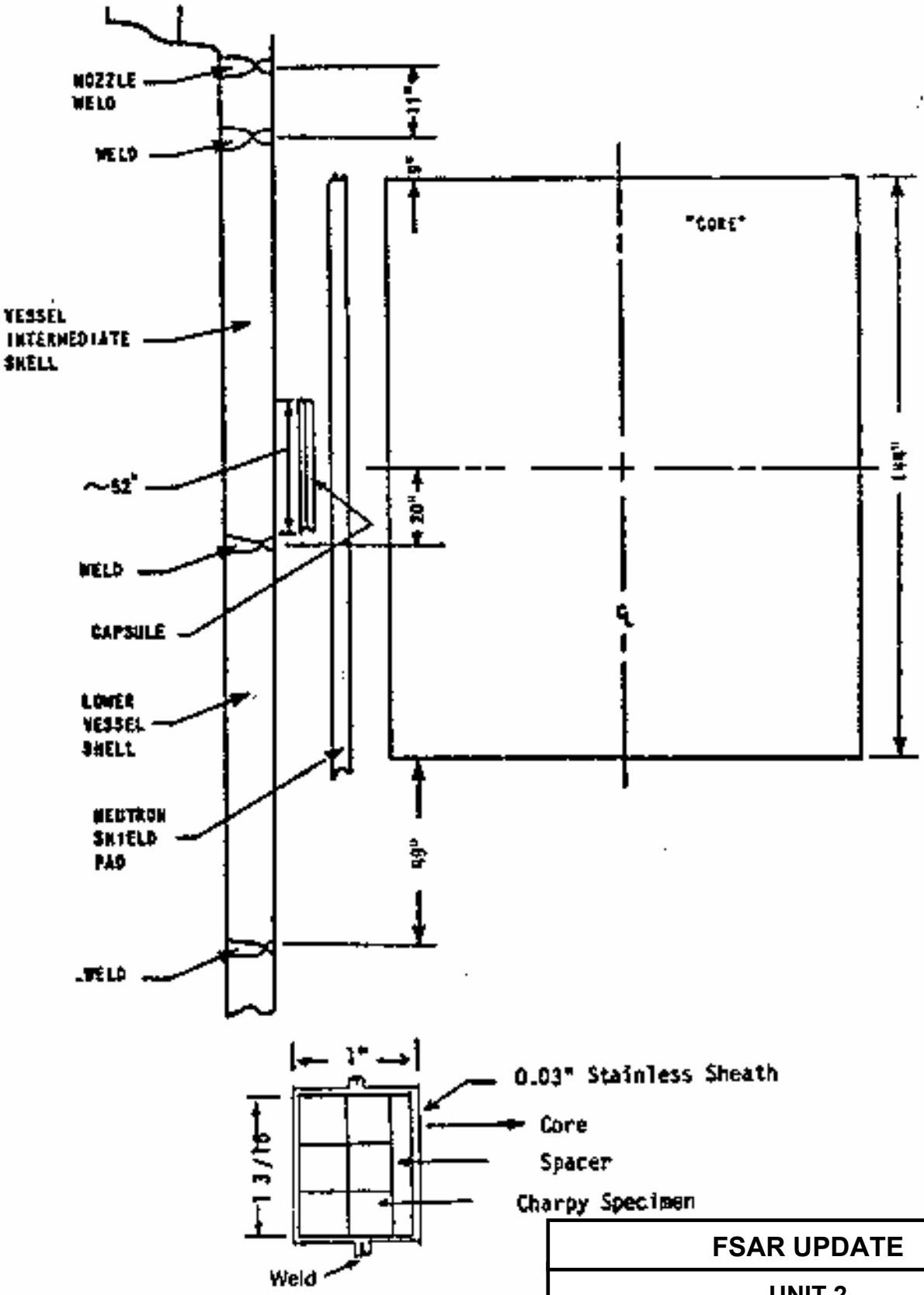

FSAR UPDATE
UNIT 2 DIABLO CANYON SITE
FIGURE 5.2-18 SURVEILLANCE CAPSULE ELEVATION VIEW

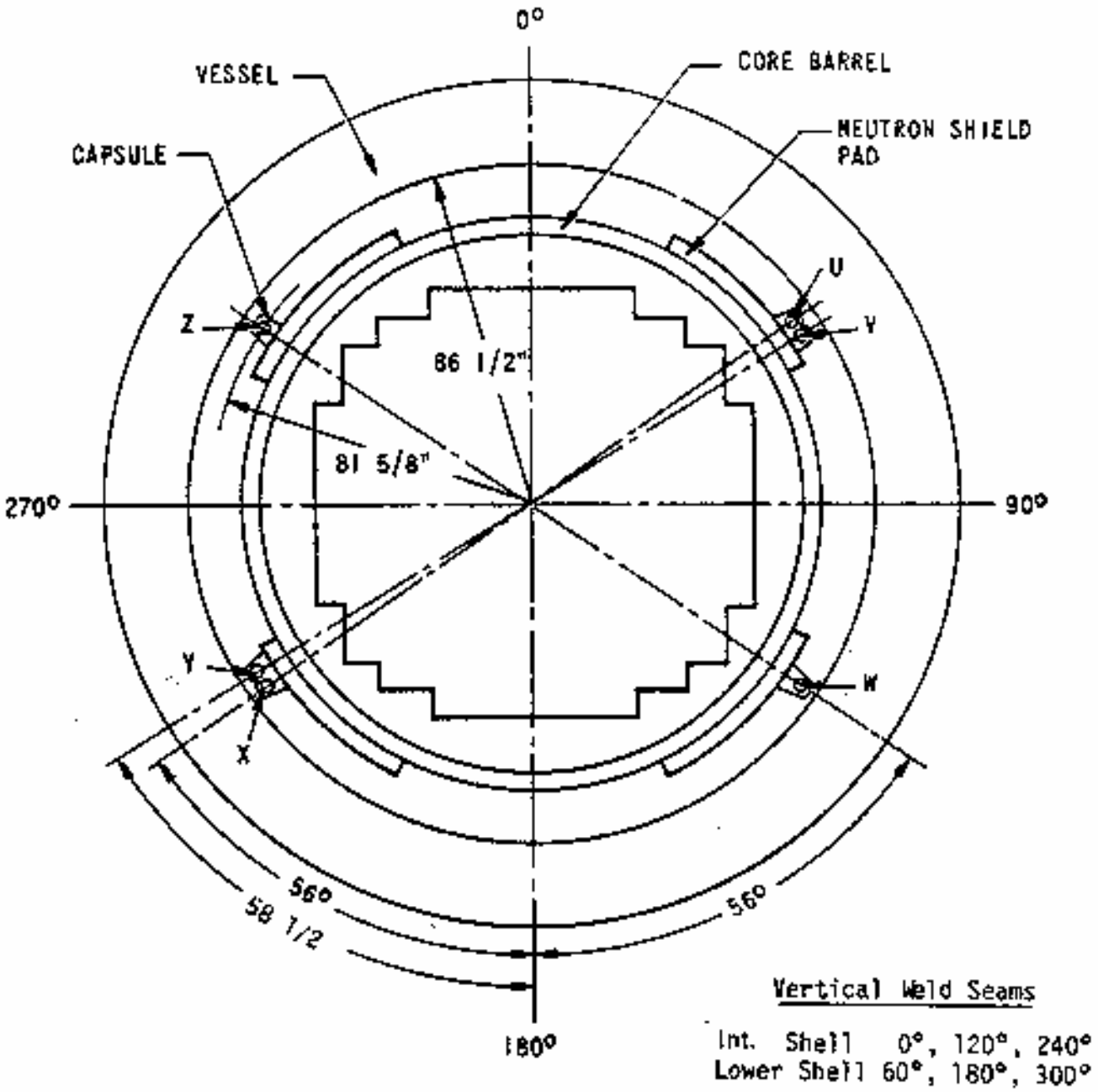

FSAR UPDATE
UNIT 2 DIABLO CANYON SITE
FIGURE 5.2-19 SURVEILLANCE CAPSULE PLAN VIEW

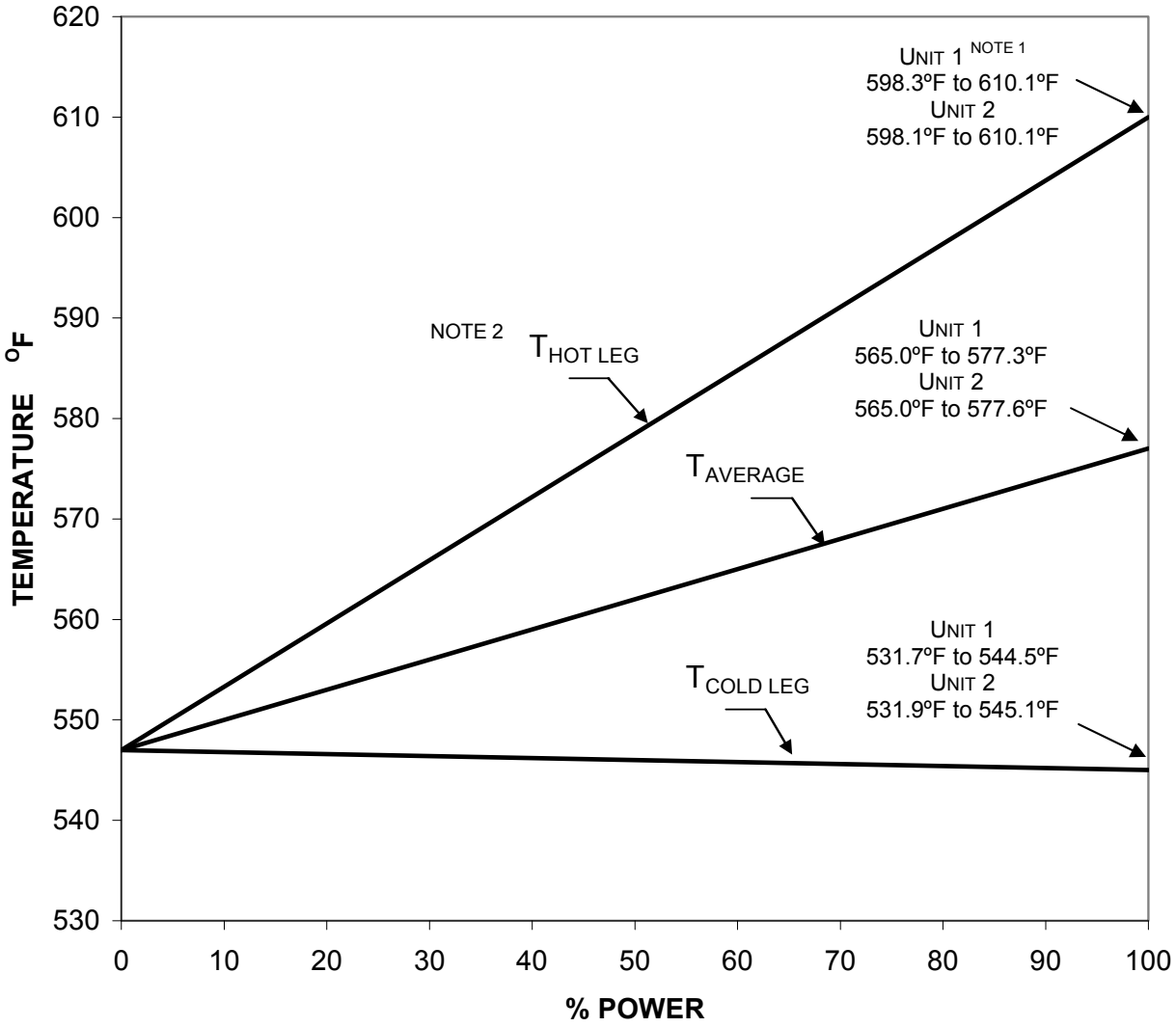

NOTE 1: UNIT 1 AND UNIT 2 DESIGN VALUE RANGES FOR FULL POWER.

NOTE 2: THE PLOTS SHOWN ARE FOR THE MAXIMUM $T_{HOT\ LEG}$, $T_{AVERAGE}$, AND $T_{COLD\ LEG}$ TEMPERATURES AT FULL POWER.

FSAR UPDATE
UNITS 1 AND 2 DIABLO CANYON SITE
FIGURE 5.3-1 HOT LEG, COLD LEG, AND AVERAGE REACTOR COOLANT LOOP TEMPERATURE AS A FUNCTION OF PERCENT FULL POWER

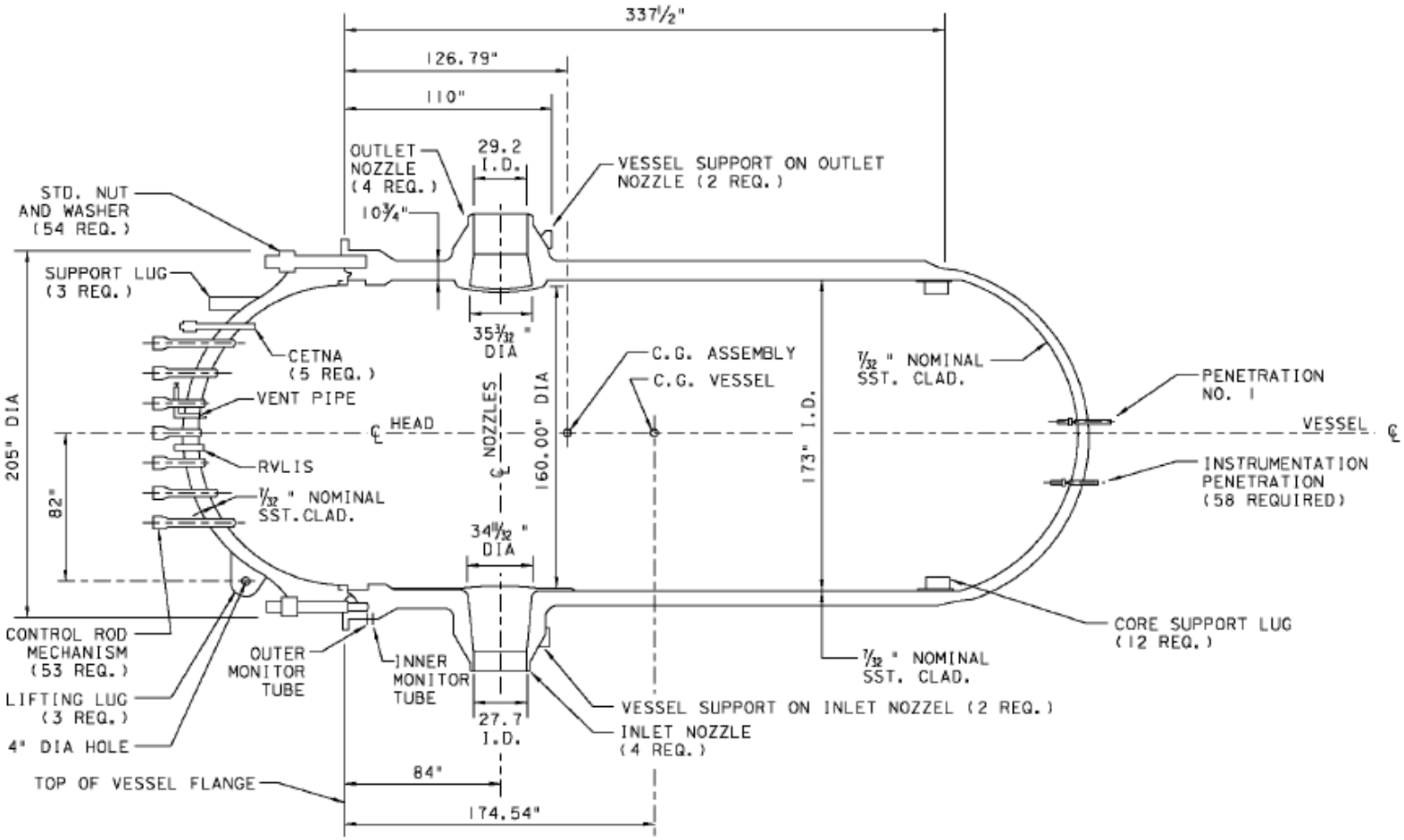

SECTIONAL ELEVATION

FSAR UPDATE
UNIT 1 DIABLO CANYON SITE
FIGURE 5.4-1 REACTOR VESSEL

Revision 20 November 2011

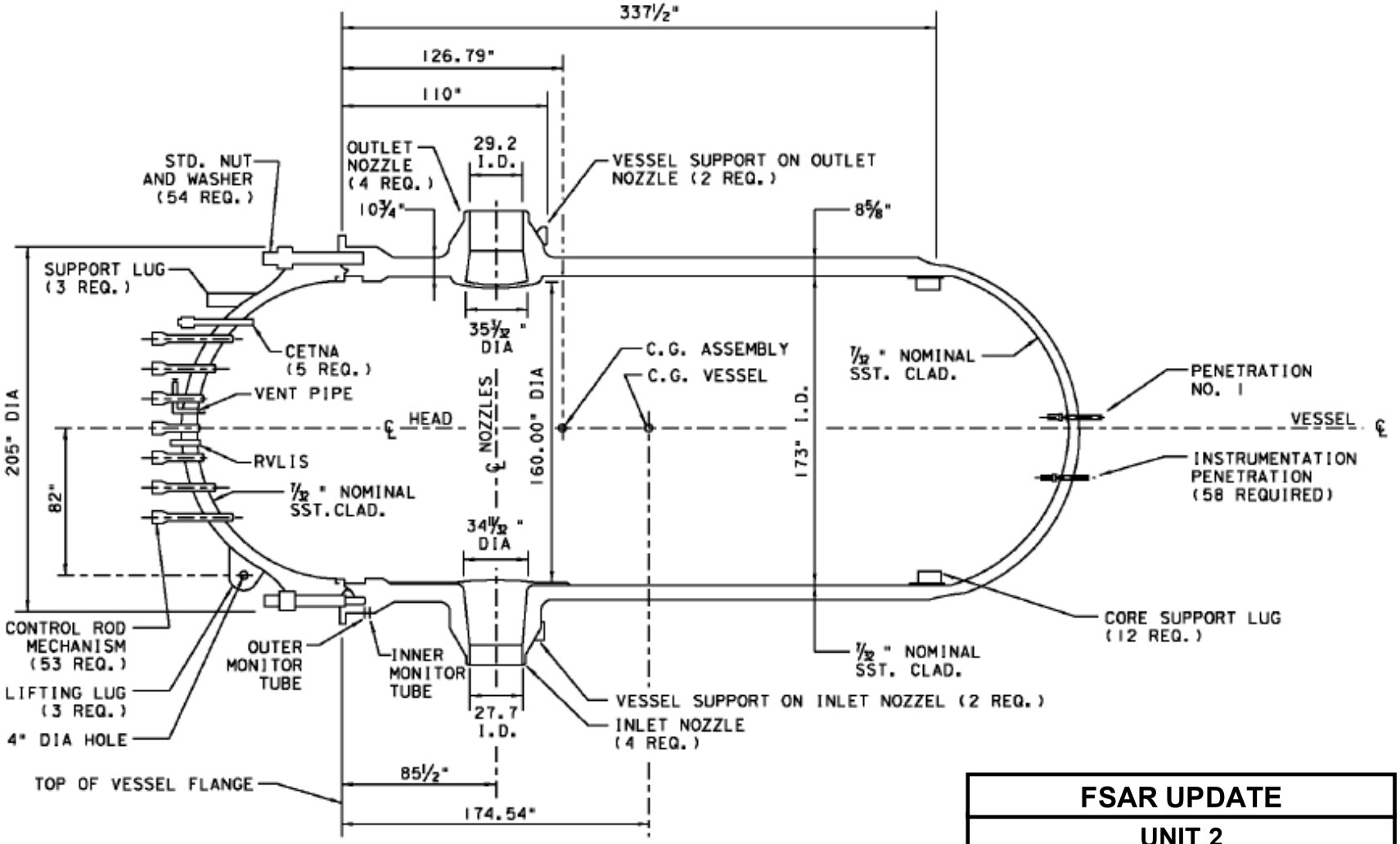

SECTIONAL ELEVATION

FSAR UPDATE
UNIT 2 DIABLO CANYON SITE
FIGURE 5.4-2 REACTOR VESSEL

Revision 20 November 2011

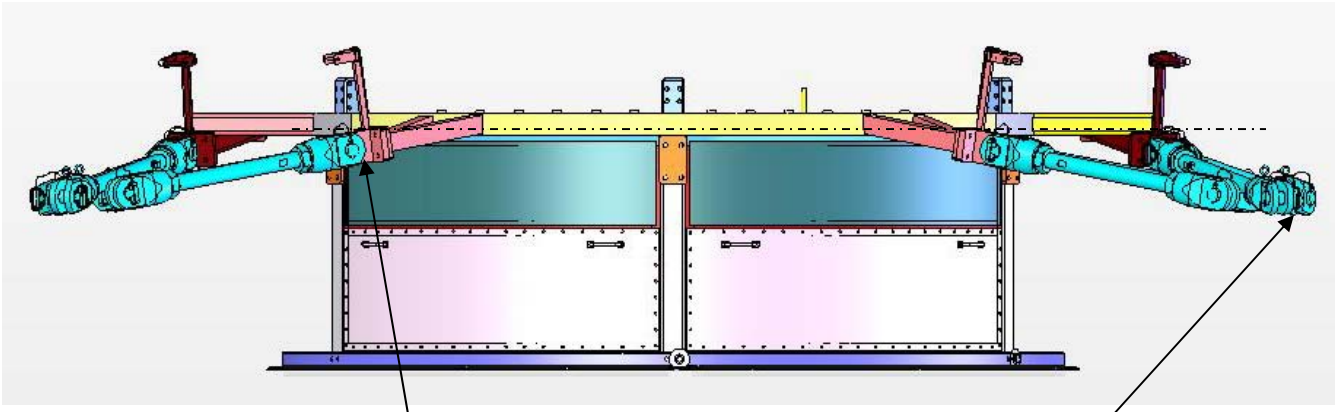

Pin connection
Between seismic tie-rods and
IHA seismic support brackets

Pin connection
Between seismic tie-rods and
seismic wall support brackets

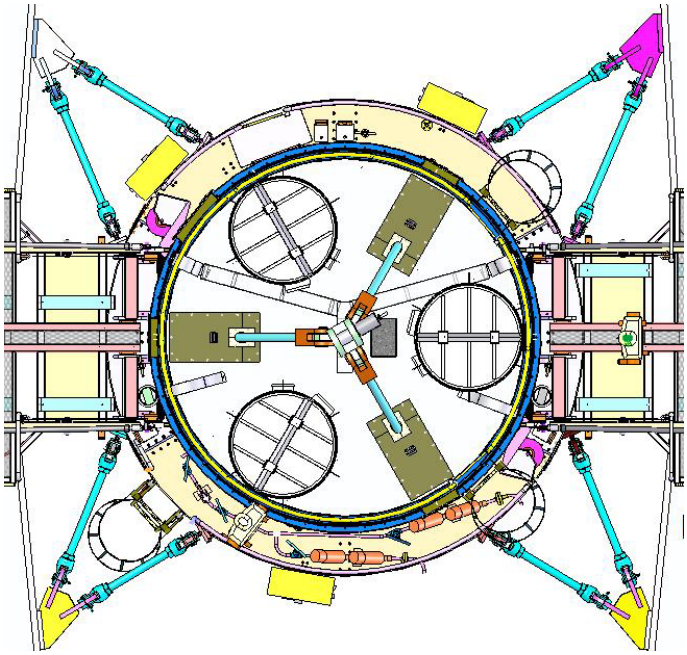

FSAR UPDATE
UNITS 1 AND 2 DIABLO CANYON SITE
FIGURE 5.4-3 INTEGRATED HEAD ASSEMBLY SEISMIC SUPPORT STRUCTURE ASSEMBLY

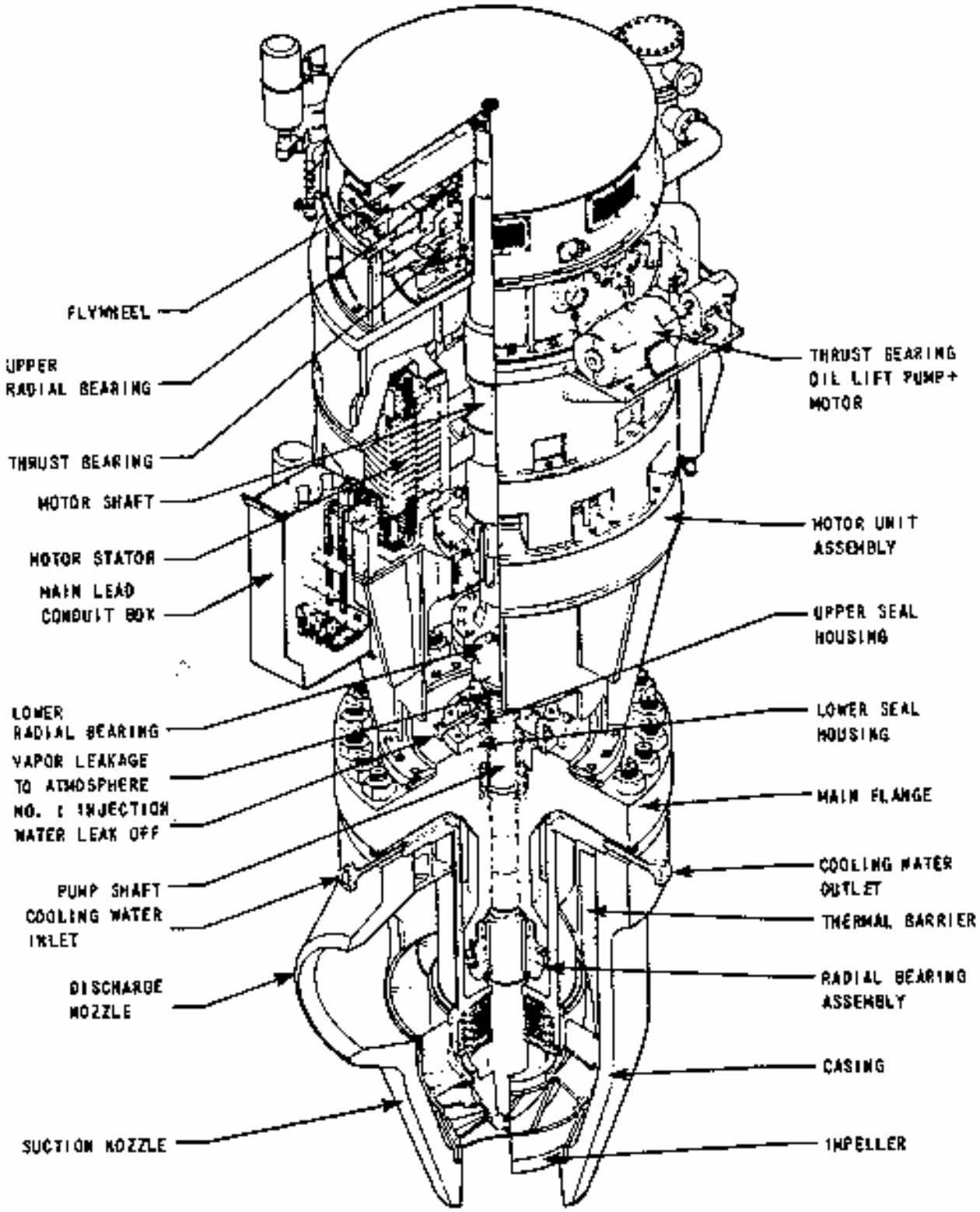

FSAR UPDATE
UNITS 1 AND 2 DIABLO CANYON SITE
FIGURE 5.5-1 REACTOR COOLANT CONTROLLED LEAKAGE PUMP

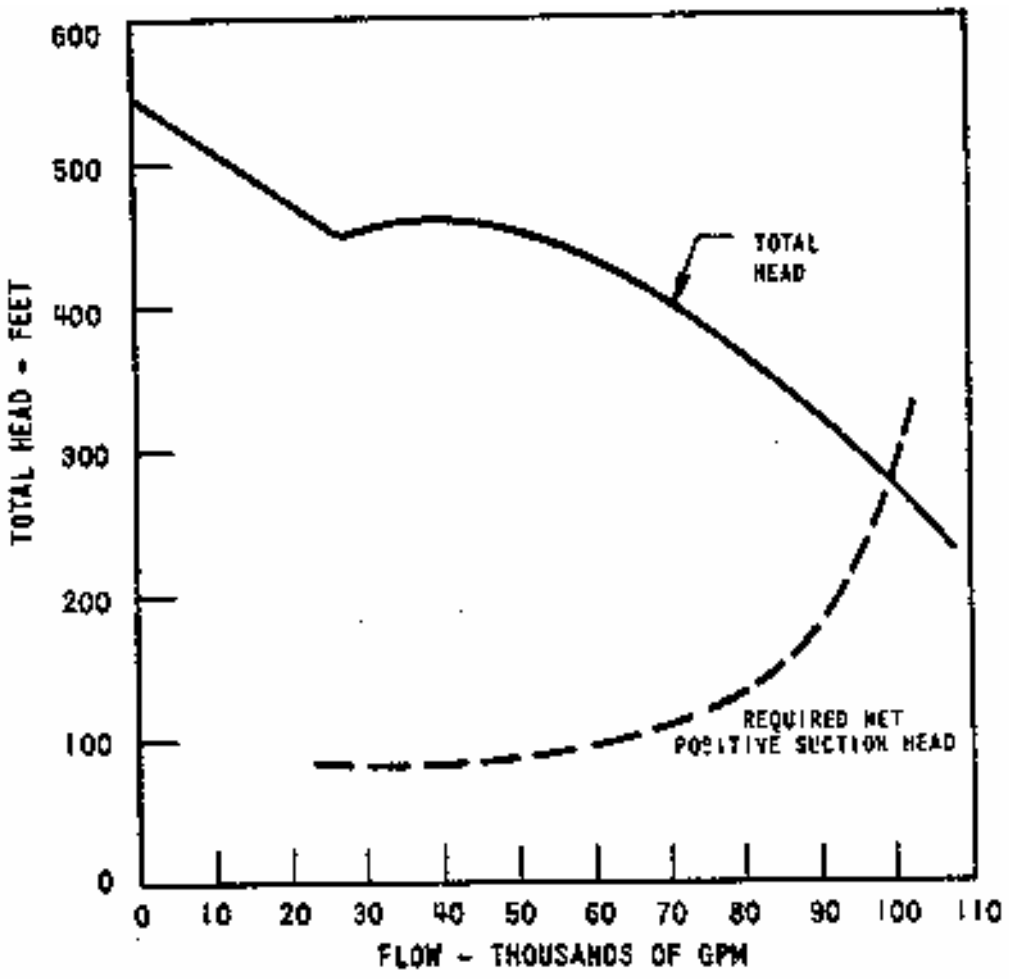

FSAR UPDATE
UNITS 1 AND 2 DIABLO CANYON SITE
FIGURE 5.5-2 REACTOR COOLANT PUMP ESTIMATED PERFORMANCE CHARACTERISTICS

Revision 11 November 1996

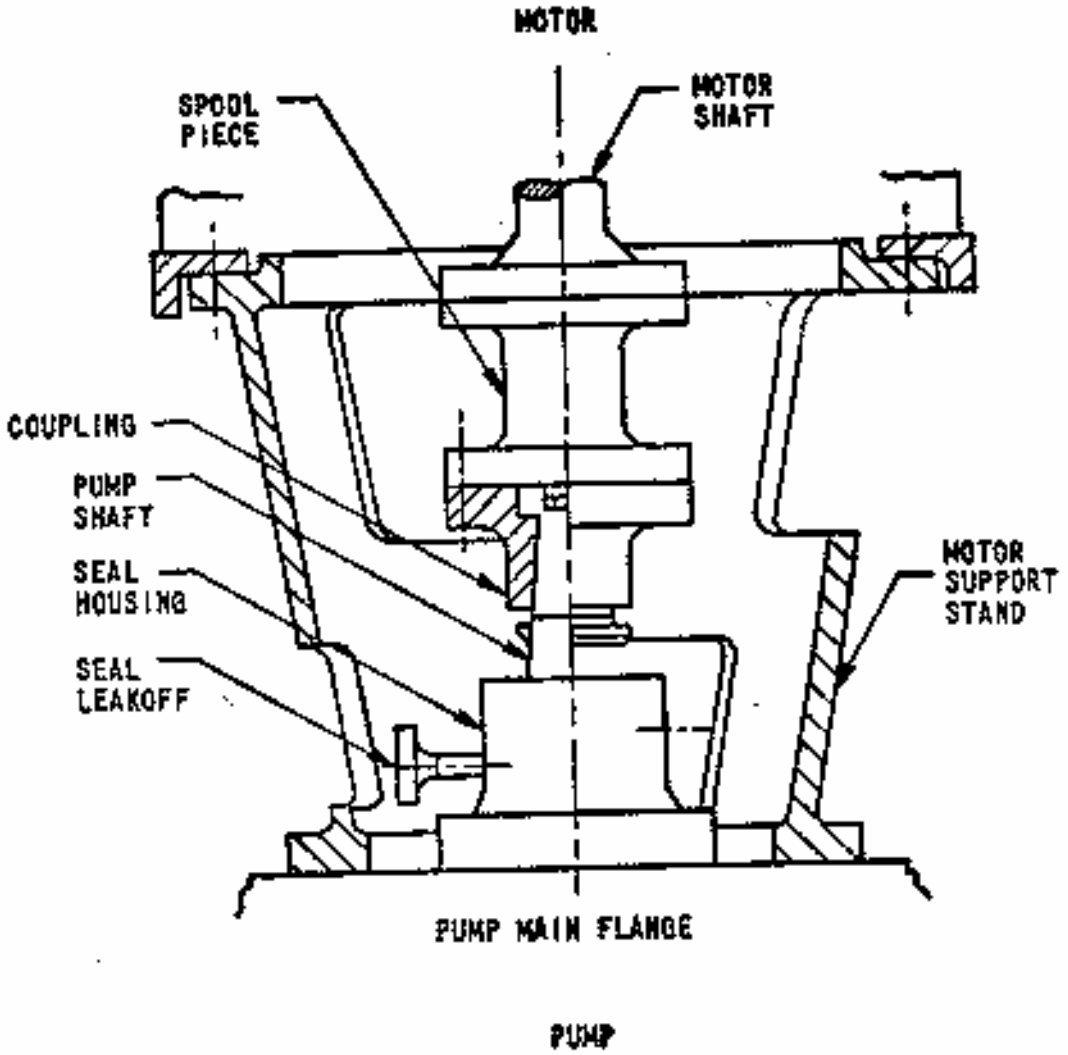

FSAR UPDATE
UNITS 1 AND 2 DIABLO CANYON SITE
FIGURE 5.5-3 REACTOR COOLANT PUMP SPOOL PIECE AND MOTOR SUPPORT STAND

Revision 11 November 1996

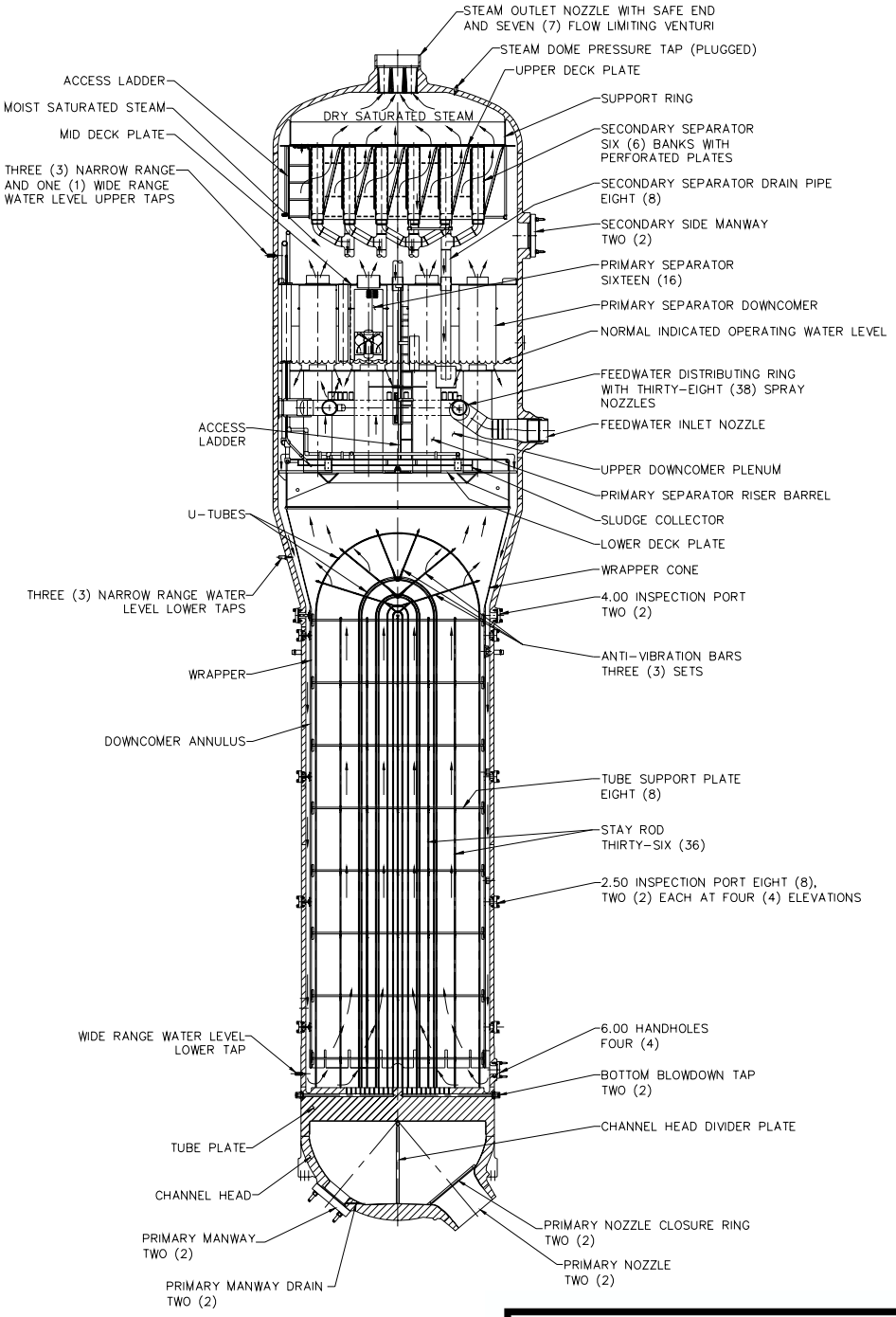

FSAR UPDATE

UNITS 1 AND 2
DIABLO CANYON

FIGURE 5.5-4
WESTINGHOUSE DELTA 54
STEAM GENERATOR

Revision 19 May 2010

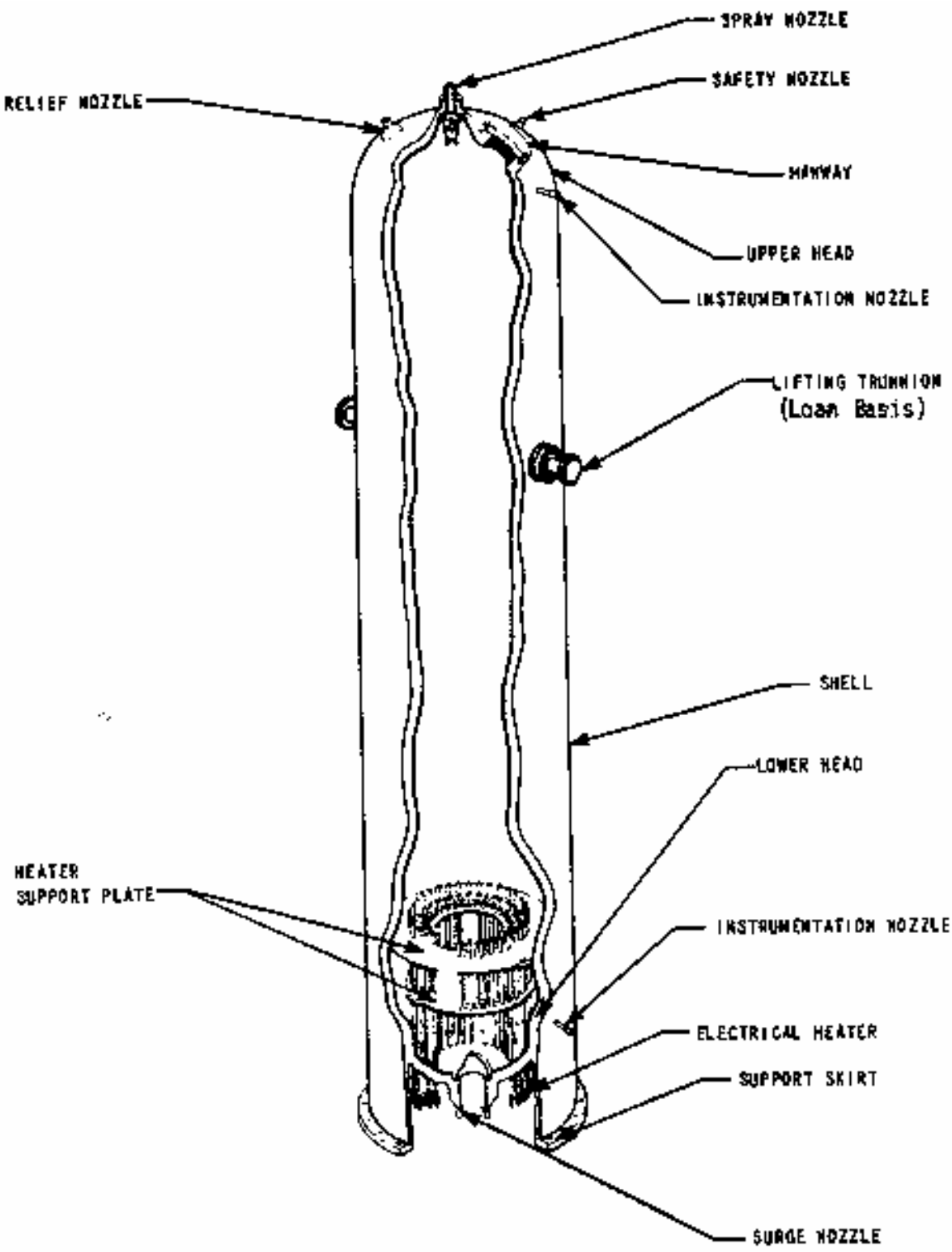

FSAR UPDATE
UNITS 1 AND 2 DIABLO CANYON SITE
FIGURE 5.5-8 PRESSURIZER

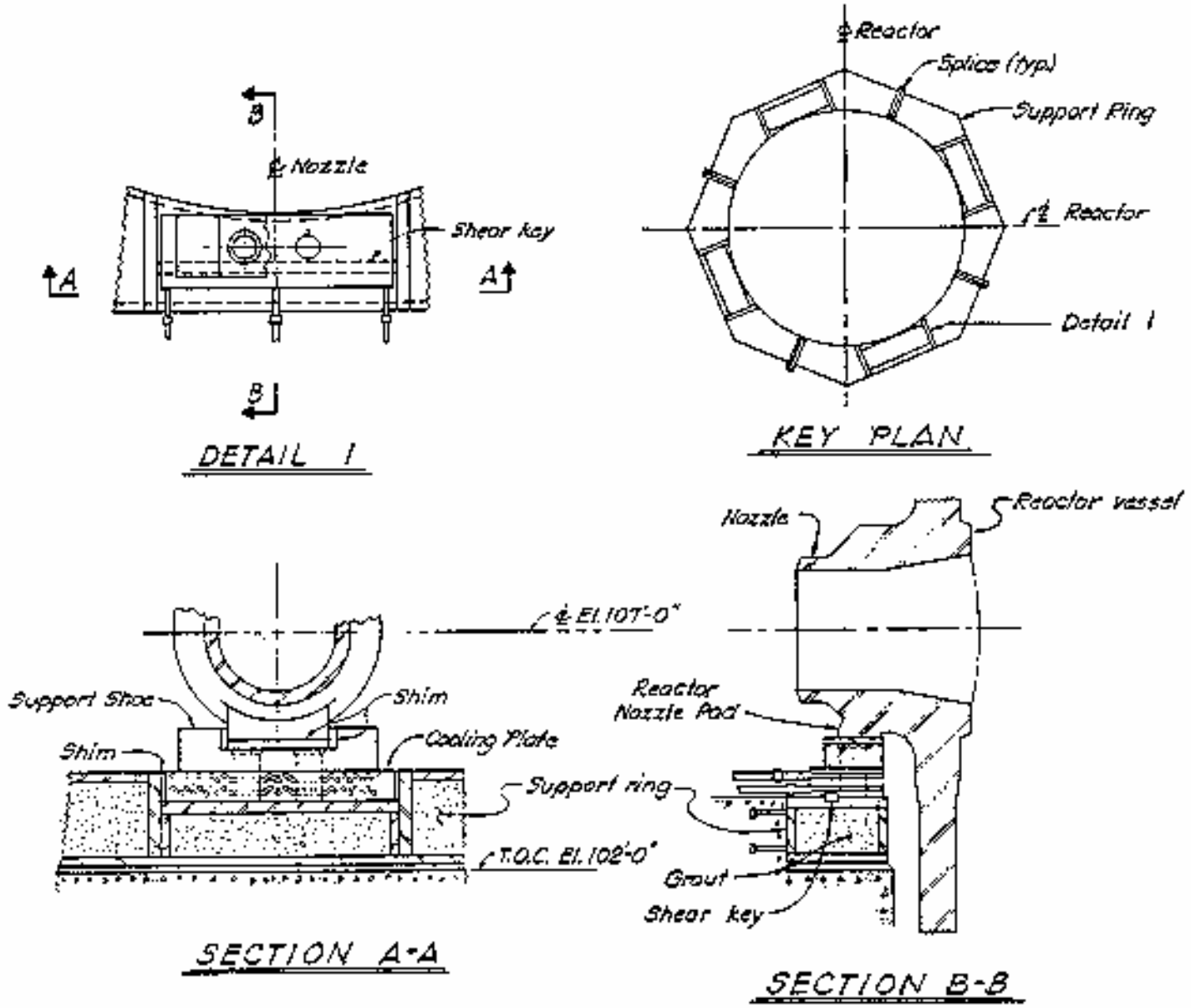

FSAR UPDATE
UNITS 1 AND 2 DIABLO CANYON SITE
FIGURE 5.5-9 REACTOR SUPPORT

Revision 11 November 1996

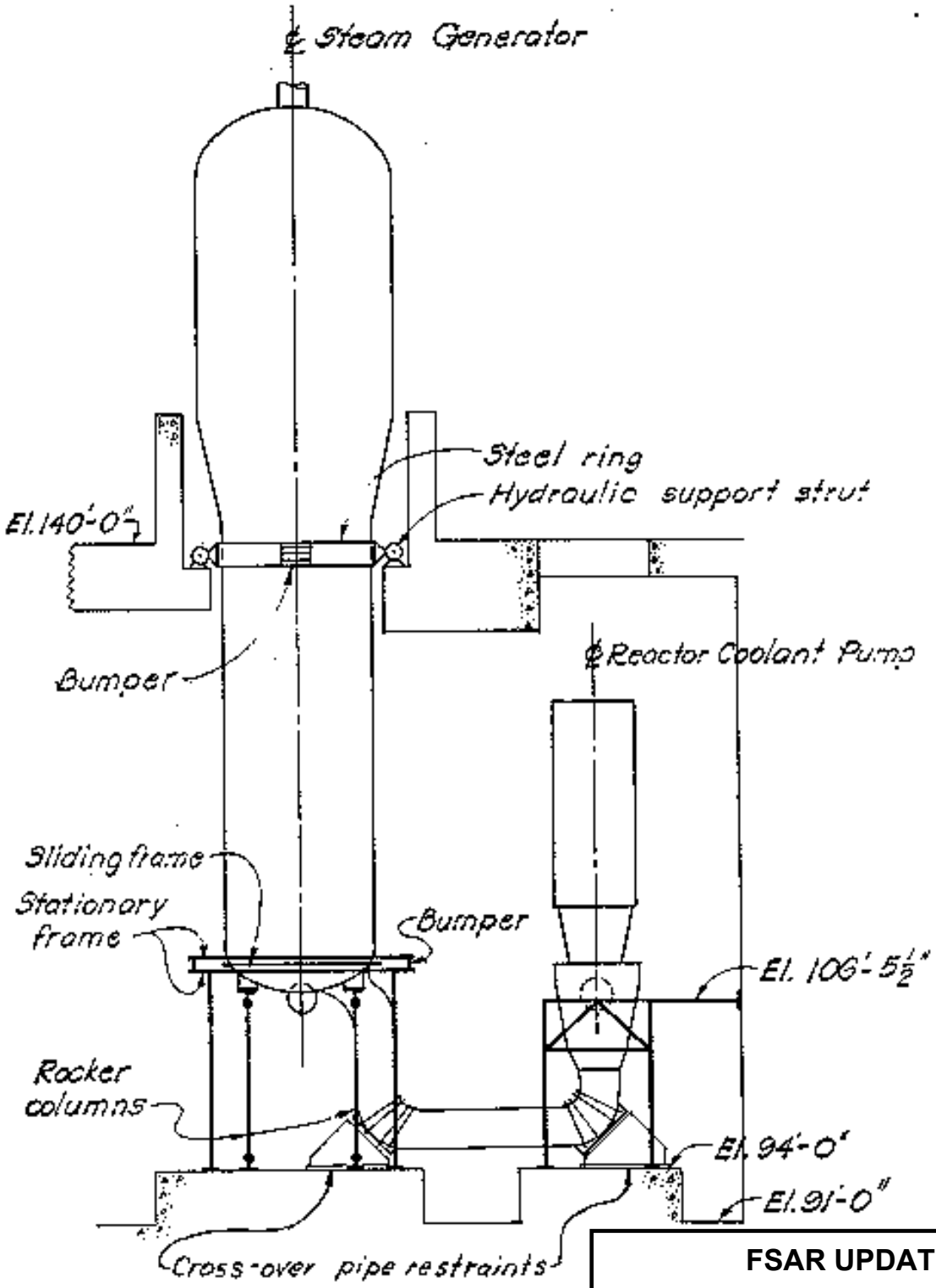

FSAR UPDATE
UNITS 1 AND 2 DIABLO CANYON SITE
FIGURE 5.5-10 STEAM GENERATOR AND REACTOR COOLANT PUMP SUPPORTS

* Crossover pipe restraints Inactive.

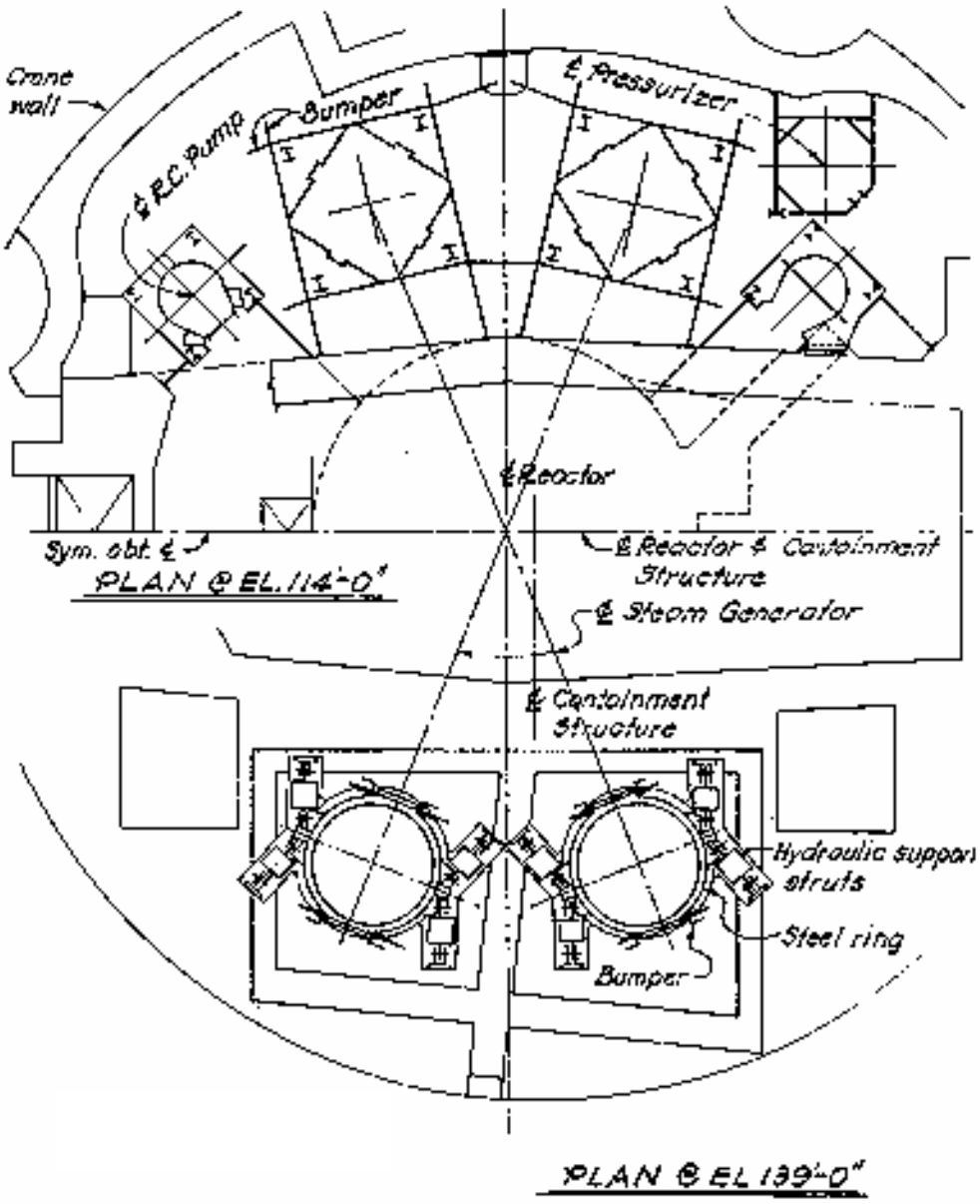

FSAR UPDATE
UNITS 1 AND 2 DIABLO CANYON SITE
FIGURE 5.5-11 COMPONENT SUPPORTS

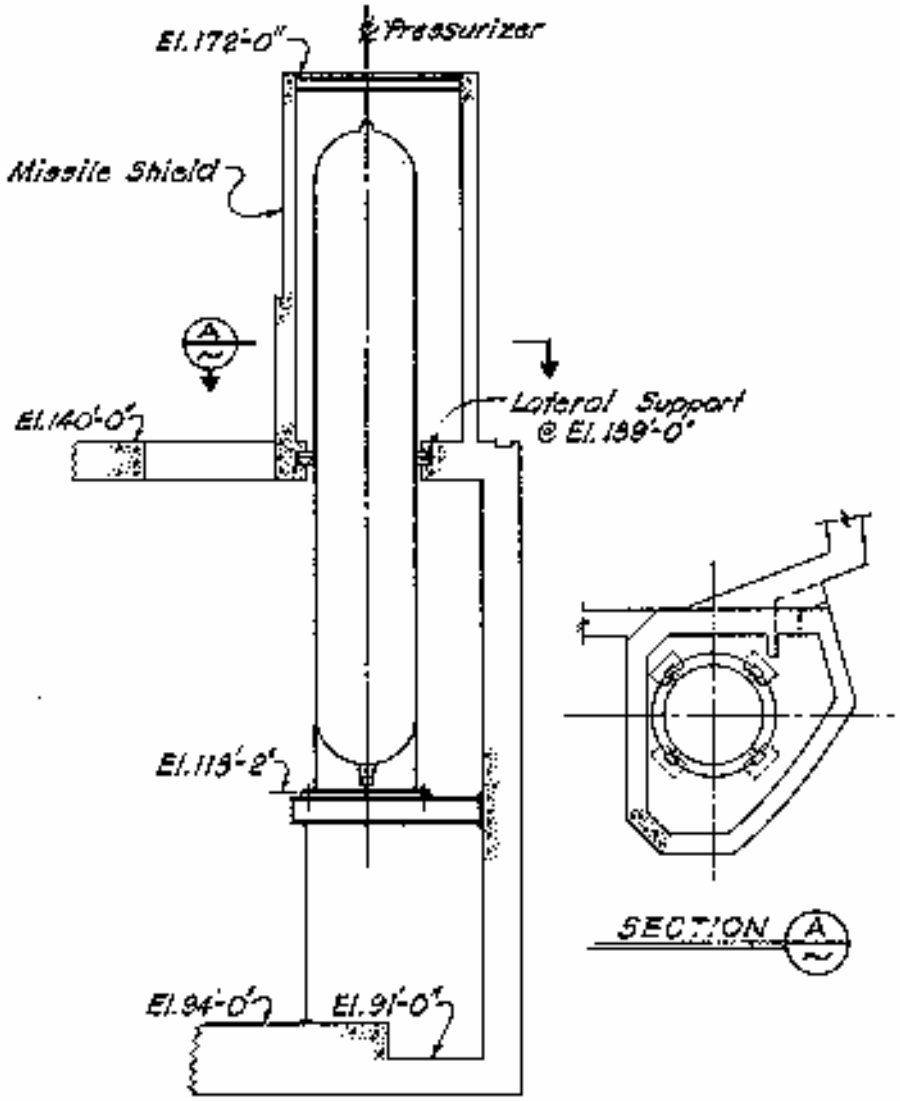

FSAR UPDATE
UNITS 1 AND 2 DIABLO CANYON SITE
FIGURE 5.5-12 PRESSURIZER SUPPORT

Revision 11 November 1996

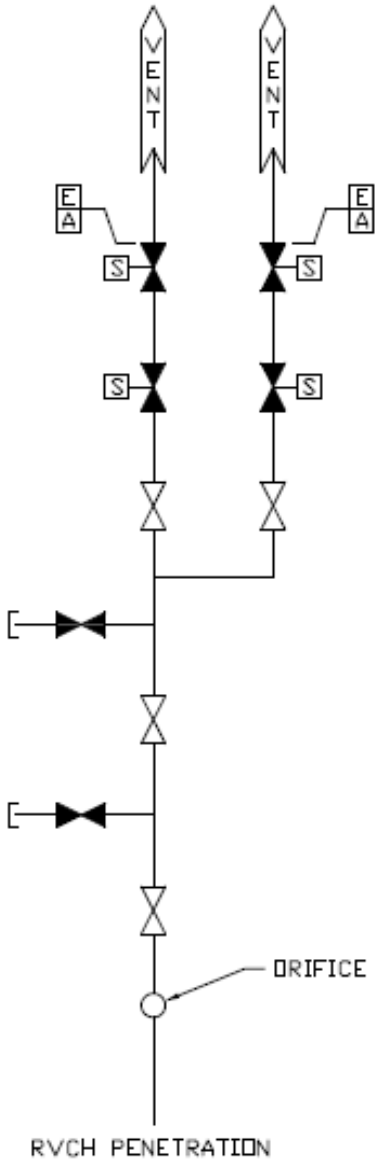

FSAR UPDATE
UNITS 1 AND 2 DIABLO CANYON SITE
FIGURE 5.5-14 SCHEMATIC FLOW DIAGRAM OF THE REACTOR VESSEL HEAD VENT SYSTEM

Revision 20 November 2011

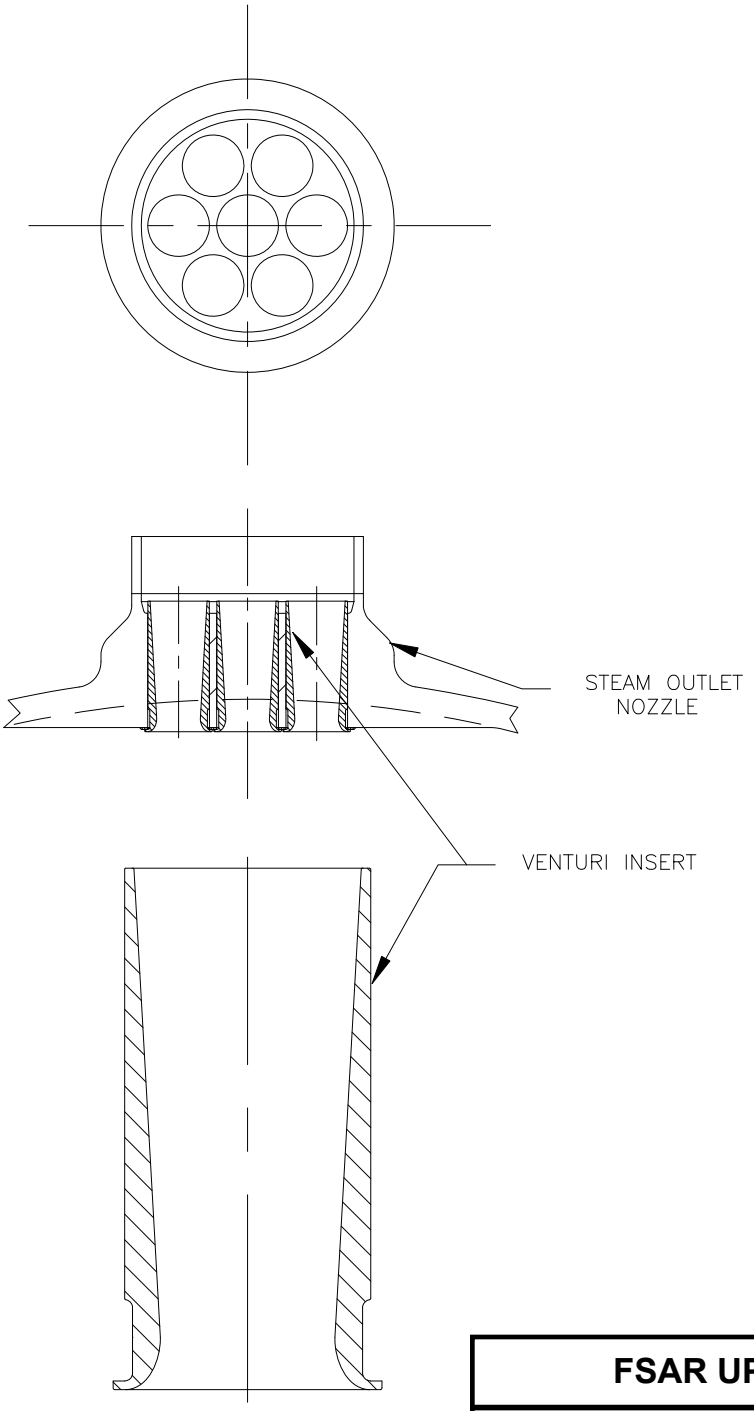

FSAR UPDATE

UNITS 1 AND 2
DIABLO CANYON SITE

FIGURE 5.5-18
SEVEN NOZZLE RSG OUTLET FLOW RESTRICTOR