UNITED STATES OF AMERICA
NUCLEAR REGULATORY COMMISSION

ATOMIC SAFETY AND LICENSING BOARD

In the Matter of	Docket No. 50-443-LA-2
NEXTERA ENERGY SEABROOK, LLC	ASLBP No. 17-953-02-LA-BD01
(Seabrook Station, Unit 1)	

Hearing Exhibit

Exhibit Number: NER001

Exhibit Title: Testimony of NextEra Witnesses Michael Collins, John Simons, Christopher Bagley, Oguzhan Bayrak, and Edward Carley ("MPR Testimony")

UNITED STATES OF AMERICA
NUCLEAR REGULATORY COMMISSION

BEFORE THE ATOMIC SAFETY AND LICENSING BOARD

In the Matter of:	)	
	)	Docket No. 50-443-LA-2
NEXTERA ENERGY SEABROOK, LLC	)	
	)	July 24, 2019
(Seabrook Station Unit 1)	)	

TESTIMONY OF NEXTERA WITNESSES MICHAEL COLLINS, JOHN SIMONS, CHRISTOPHER BAGLEY, OGUZHAN BAYRAK, AND EDWARD CARLEY

Steven Hamrick, Esq.
NextEra Energy Seabrook, LLC
801 Pennsylvania Ave., NW Suite 220
Washington, D.C. 20004
Phone: (202) 349-3496
Fax: (202) 347-7076
E-mail: steven.hamrick@fpl.com

Paul M. Bessette, Esq.
Ryan K. Lighty, Esq.
Morgan, Lewis & Bockius LLP
1111 Pennsylvania Avenue, N.W.
Washington, D.C. 20004
Phone: (202) 739-5796
Fax: (202) 739-3001
E-mail: paul.bessette@morganlewis.com
Email: ryan.lighty@morganlewis.com

Counsel for NextEra Energy Seabrook, LLC

TABLE OF CONTENTS

TABLE OF CONTENTS
(continued)

TABLE OF ABBREVIATIONS

ACI	American Concrete Institute
ACRS	Advisory Committee on Reactor Safeguards
ASME	American Society of Mechanical Engineers
ASR	Alkali-Silica Reaction
CCI	Combined Cracking Index
CEB	Containment Enclosure Building
CGD	Commercial Grade Dedication
DRI	Damage Rating Index
DOE	Department of Energy
ECF	Environmental Conditioning Facility
EPRI	Electric Power Research Institute
fib	Fédération Internationale du Béton (International Federation for Structural Concrete)
FSEL	Ferguson Structural Engineering Laboratory at the University of Texas at Austin
GALL-SLR Report	Generic Aging Lessons Learned for Subsequent License Renewal Report
GDC	General Design Criteria
LAR	License Amendment Request
LRA	License Renewal Application
LWR	Light Water Reactor
LSTP	Large-Scale Test Program
MPR	MPR Associates, Inc.
NEI	Nuclear Energy Institute
NIST	National Institute of Standards and Technology
NRC	Nuclear Regulatory Commission
QA	Quality Assurance
ORNL	Oak Ridge National Laboratory
PCI	Precast/Prestressed Concrete Institute
RAI	Request for Additional Information
RIC	Regulatory Information Conference
SGH	Simpson, Gumpertz, & Heger, Inc.
SLR	Subsequent License Renewal
SME	Subject Matter Expert
SMP	Structures Monitoring Program
SRBE	Snap Ring Borehole Extensometer
SRP	Standard Review Plan
UFSAR	Updated Final Safety Analysis Report
VAR	Visual Assessment Rating
WJE	Wiss, Jenney, Elstner, Associates, Inc.

UNITED STATES OF AMERICA
NUCLEAR REGULATORY COMMISSION

BEFORE THE ATOMIC SAFETY AND LICENSING BOARD

In the Matter of:	)	
	)	Docket No. 50-443-LA-2
NEXTERA ENERGY SEABROOK, LLC	)	
	)	July 24, 2019
(Seabrook Station Unit 1)	)	

TESTIMONY OF NEXTERA WITNESSES MICHAEL COLLINS, JOHN SIMONS, CHRISTOPHER BAGLEY, OGUZHAN BAYRAK, AND EDWARD CARLEY

I. WITNESS BACKGROUND

A. Michael Collins ("MC")

Q1. Please state your full name.

A1. (MC) My name is Michael K. Collins.

Q2. By whom are you employed and what is your position?

A2. (MC) I am employed by NextEra Energy Seabrook, LLC ("NextEra") as Director of Engineering for Seabrook Station, Unit 1 ("Seabrook").

Q3. Please describe your role in this proceeding.

A3. (MC) I am involved in this proceeding as a NextEra witness in connection with the adjudication of the admitted contention. My role is to provide senior management oversight for the development and communication of relevant information regarding the development of License Amendment Request 16-03 ("LAR") to address concrete structures affected by alkali silica reaction ("ASR") and the development and implementation of the ASR-related monitoring programs at Seabrook to validate that progression of ASR remains within established limits.

Q4. Please describe your educational and professional qualifications, including relevant professional activities.

A4. (MC) My professional and educational qualifications are described in my biography (NER006). I received a Bachelor of Science Degree in Marine Engineering from the Massachusetts Maritime Academy in 1979.

I have 38 years of professional experience in the nuclear power industry. I have worked at Seabrook for 21 years, having progressed from a Senior Engineer to Director of Engineering including five years as Manager of Design Engineering. I was the design authority for Seabrook when ASR was first discovered, and continue to be the design authority at the plant today. In 2015, I completed the Institute of Nuclear Power Operations ("INPO") Senior Nuclear Plant Management Course.

Prior to joining NextEra in 1998, I was employed with the Stone & Webster Engineering Corporation for 17 years. My assignments included engineering support for initial construction of two nuclear facilities and continuing service engineering support for several other nuclear facilities.

Q5. Are you familiar with the sections of the LAR (as defined in A36) that are relevant to the technical issues raised in the contention?

A5. (MC) Yes. I have been involved with addressing ASR at Seabrook since 2009 when visual indications of ASR were initially identified in station concrete. I have provided direct engineering oversight for the development, and subsequent revision, of the LAR that addresses the licensing basis for ASR, and implementation of the ASR expansion monitoring and assessment activities at the station.

Q6. Please further describe the basis for your familiarity with these aspects of the LAR and the associated technical issues raised in the contention.

A6. (MC) I have been responsible for the engineering management and technical oversight for addressing ASR since 2010 in the capacity of both Manager of Design Engineering and Director of Engineering. This included the development and regulatory review of the LAR and presentation to the Advisory Committee on Reactor Safeguards ("ACRS") in October 2018. I was involved with the initial concept, planning and execution of the Large Scale Test Program ("LSTP"), evaluation of LSTP results and personally witnessed LSTP testing at the Ferguson Structural Engineering Laboratory ("FSEL"). I have been involved with Seabrook's development and implementation of ASR-related aspects of the Structures Monitoring Program ("SMP") and application of the methodology used for evaluation of ASR-affected concrete structures at Seabrook. In general, I have reviewed various materials in preparing this testimony, including those listed in A45 to A48, below.

B. <u>John Simons ("JS")</u>

Q7. Please state your full name.

A7. (JS) My name is John W. Simons.

Q8. By whom are you employed and what is your position?

A8. (JS) I am employed by MPR Associates, Inc. ("MPR") as the General Manager of Projects, with responsibility for overseeing execution of all MPR projects (Power Services, Federal Services and Product Development). I previously served as Director of Plant Systems & Components and General Manager of Power Services at MPR.

Q9. Please describe your role in this proceeding.

A9. (JS) I am involved in this proceeding as a witness for NextEra in connection with the adjudication of the admitted contention. My role is to provide relevant information regarding

the evaluation of ASR at Seabrook. More specifically, my role is to provide information on: (i) the initial structural assessment which, provided the basis for "operability" of ASR-affected structures at Seabrook and defined the initial vision for the LSTP, (ii) the development and conduct of the LSTP, (iii) the representativeness of the LSTP to conditions at Seabrook, (iv) the application of LSTP results to Seabrook monitoring and trending of ASR, and (v) the development of Seabrook's LAR.

Q10. Please describe your educational and professional qualifications, including relevant professional activities.

A10. (JS) My professional and educational qualifications are summarized in my *curriculum vitae* (NER008). I have 32 years of professional experience in the nuclear power industry. Since joining MPR in 1987, my work has focused primarily on nuclear power plants. Beginning in 2003, I have directed multiple test programs to assess degradation of concrete due to chemical processes, and have overseen MPR's efforts on license renewal related to concrete degradation. As noted in my CV, I am an author or contributor on numerous Electric Power Research Institute ("EPRI") reports, NUREG publications, and other papers and presentations on engineering topics relevant to the nuclear industry, including aging management issues related to concrete at nuclear power plants, and large-scale testing. I hold a Bachelor of Science degree in Chemistry from Columbia Union College, and a Bachelor of Science degree in Chemical Engineering from the University of Maryland.

Q11. Are you familiar with the sections of the LAR (as defined in A36) that are relevant to the technical issues raised in the contention?

A11. (JS) Yes. I am familiar with the technical issues related to the impacts of ASR on reinforced concrete structures, the development and execution of the LSTP, and the application of LSTP results to Seabrook as part of the development of the LAR. I have been involved with addressing ASR at Seabrook since NextEra first requested MPR support in June 2011. I have

personal knowledge of the initial concept, planning, and execution of the LSTP and evaluation of LSTP results. I also have personal knowledge of the application of those results to Seabrook, including as inputs to Seabrook's SMP and as inputs to the methodology for evaluating ASR-affected structures. I also have personal knowledge of the development, and subsequent supplementation, of the portions of the LAR that address the issues being litigated in this proceeding.

Q12. Please further describe the basis for your familiarity with these aspects of the LAR and the associated technical issues raised in the contention.

A12. (JS) I have been responsible for designing and implementing multiple test programs to assess degradation of concrete due to chemical processes. As relevant to this proceeding, I directed MPR's multi-year program to evaluate the impact of ASR on reinforced concrete structures at Seabrook. I have provided technical consulting and senior oversight of MPR's efforts for EPRI on addressing ASR in concrete at nuclear plants.

I have participated in multiple forums to keep abreast of ongoing research on ASR and concrete degradation, including: EPRI workshops and symposia; ACRS briefings by EPRI, Oak Ridge National Laboratory ("ORNL") and the Nuclear Regulatory Commission ("NRC") staff; a tour of the University of Tennessee at Knoxville laboratory conducting ASR research for ORNL; and a meeting/tour of the National Institute of Standards and Technology ("NIST") laboratory conducting ASR research for the NRC Office of Research. In addition, I am on the Nuclear Energy Institute ("NEI") Executive Working Group for Subsequent License Renewal and in this capacity have participated in meetings between the industry, EPRI, NRC, and U.S. Department of Energy ("DOE") on research of concrete aging mechanisms, including ASR.

I have reviewed various materials in preparing this testimony, including those listed in A45 to A48, below.

C. <u>Christopher Bagley ("CB")</u>

Q13. Please state your full name.

A13. (CB) My name is Christopher W. Bagley.

Q14. By whom are you employed and what is your position?

A14. (CB) I am employed by MPR as a Supervisory Engineer and have been involved in a variety of projects for the nuclear industry and the federal government as the technical lead or project manager. Prior to joining MPR in 2009, I served as an officer in the United States Navy. I was an Engineer with the Naval Reactors Program, which is the organization with responsibility for all shipboard nuclear power plants, shore-based prototypes, and nuclear propulsion support facilities for the U.S. Navy.

Q15. Please describe your role in this proceeding.

A15. (CB) I am involved in this proceeding as a NextEra witness in connection with the adjudication of the admitted contention. My role is to provide relevant information regarding the evaluation of ASR at Seabrook. More specifically, my role is to provide information on topics such as the LSTP and the application of LSTP results to Seabrook.

Q16. Please describe your educational and professional qualifications, including relevant professional activities.

A16. (CB) My professional and educational qualifications are summarized in my *curriculum vitae* (NER009). I hold a Bachelor of Science degree in Chemical Engineering from the University of Virginia, received Naval Nuclear Propulsion Plant and Reactor Core Design Training at the Bettis Reactor Engineering School, and hold a Masters of Engineering Management degree from Old Dominion University.

I have more than 15 years of professional experience in the area of nuclear power. Since joining MPR in 2009, my focus has been with plant systems, structures, and components and

includes work on a wide range of areas including the evaluation of concrete degradation mechanisms, and general materials and water chemistry issues. I have led various projects for EPRI to develop published guidance for nuclear power plants regarding concrete degradation issues, including ASR. As noted in my CV, I am an author or contributor to multiple EPRI reports[1].

Q17. Are you familiar with the sections of the LAR (as defined in A36) that are relevant to the technical issues raised in the contention?

A17. (CB) Yes. I have been involved with addressing ASR at Seabrook since NextEra first requested MPR support in June 2011. I am familiar with the technical issues related to the impacts of ASR on reinforced concrete structures, the development and execution of the LSTP, and the application of LSTP results to Seabrook. I have personal knowledge of the initial concept, planning, and execution of the LSTP and evaluation of LSTP results. I also have personal knowledge of the application of those results to Seabrook, including as inputs to Seabrook's SMP.

Q18. Please further describe the basis for your familiarity with these aspects of the LAR and the associated technical issues raised in the contention.

A18. (CB) In my capacity at MPR, I served as the technical lead for numerous efforts involving the evaluation of ASR impacts on reinforced concrete structures at Seabrook. I have performed inspections of concrete surfaces affected by ASR as part of an initial assessment of the extent of condition at Seabrook conducted in 2011. I developed technical content and provided technical and quality oversight for the LSTP. I was also the primary author on several

---

[1] MPR personnel were the principal investigators for EPRI Report 3002005389, "Tools for Early Detection of ASR in Concrete Structures" (2015), EPRI Report 3002010093, "Long-Term Operations: Aging Management of Concrete Structures Affected by Alkali-Silica Reaction" (2017), and several technical updates that were part of the projects for these reports. While our testimony does cite some EPRI reports pertaining to ASR, we do not cite reports where MPR was the principal investigator because such documents are not independent from our perspective.

reports submitted to the NRC describing the LSTP and applying the results to Seabrook. I have been working with EPRI on addressing ASR in concrete at nuclear plants since 2014, and in that capacity have had the opportunity to engage utilities and researchers from around the world on methods for identifying and evaluating ASR-affected concrete.

In general, I have reviewed various materials in preparing this testimony, including those listed in A45 to A48, below.

D. <u>Oguzhan Bayrak ("OB")</u>

Q19. Please state your full name.

A19. (OB) My name is Oguzhan Bayrak.

Q20. By whom are you employed and what is your position?

A20. (OB) I am a Distinguished Teaching Professor in the Civil, Architectural, and Environmental Engineering Department at the University of Texas at Austin. I was the Director of the FSEL at the University of Texas at Austin for the time period of the LSTP.

Q21. Please describe your role in this proceeding.

A21. (OB) I am involved in this proceeding as a NextEra witness in connection with the adjudication of the admitted contention. My role is to provide relevant information regarding the LSTP as well as the structural implications of ASR as they relate to reinforced concrete structures at Seabrook Nuclear Power Plant.

Q22. Please describe your educational and professional qualifications, including relevant professional activities.

A22. (OB) My professional and educational qualifications are summarized in my *curriculum vitae* (NER010). By way of formal education, I earned my B.Sc. degree from the Middle East Technical University. I went on to earn my M.A.Sc. and Ph.D. degrees in Civil Engineering at the University of Toronto. I have spent approximately 20 years in academia,

primarily at the University of Texas at Austin. My area of expertise is Structural Engineering, with a focus on studying behavior, analysis, and design of reinforced and prestressed concrete structures, the evaluation of structures in distress, and earthquake engineering. I am a Fellow of the American Concrete Institute ("ACI"), and presently serve on a few technical committees, including the Committee on Reinforced Concrete Columns, the Committee on Earthquake-Resistant Concrete Bridges, and the Committee on Shear and Torsion. In 2015, I was awarded the ACI's "Chester Paul Siess Award for Excellence in Structural Engineering Research." I am also a member of the Precast/Prestressed Concrete Institute ("PCI") and serve on various technical committees. Technical papers I authored or co-authored received various awards from PCI as well, including the Robert Lyman Award in 2016 and the George D. Nasser Award in 2011.

A great majority of my technical activities take place under the auspices of the International Federation for Structural Concrete (i.e., *fib* or Federation Internationale du Beton). *fib* is made up of 43 national member groups and approximately 1,000 individual or corporate members. This nonprofit association is committed to advancing the technical, economic, aesthetic and environmental performance of concrete structures worldwide. I am currently involved in the preparation of the next Model Code ("MC2020"), which serves as a primary reference document for many national reinforced concrete design codes around the world. MC2020 is meant to be used for both designing new structures and evaluating the existing inventory of structures (including structures experiencing concrete and reinforcement degradation) in a uniform, consistent and rational manner with respect to structural safety and environmental impact. In *fib*, I serve as deputy chair for *fib*'s Commission 2, Analysis and Design of Concrete Structures. Commission 2 is made up of 24 committees and sub-committees

(i.e., Task Groups and Working Parties in *fib* terminology) and over 200 structural concrete professionals. In addition, I serve as the chair (i.e., convenor in *fib* terminology) of the committee on shear. Finally, I serve on the editorial board of Structural Concrete which is the official technical journal of the *fib*. This journal "provides conceptual and procedural guidance in the field of concrete construction and features peer-reviewed papers, keynote research and industry news covering all aspects of the design, construction, performance in service and demolition of concrete structures."

As noted in my CV, my work in the area of Structural Engineering has been published or presented over 200 times in technical journals, conference proceedings, books, technical reports, and other publications. Notably, in addition to my Seabrook-related research, I have served as a supervisor on four sponsored ASR research projects on structural performance of deep anchor bolts in ASR-affected drilled shaft foundations, shear strength of ASR-affected reinforced concrete beams, and strand anchorage in ASR-affected prestressed concrete beams. These projects included field assessments of ASR-affected concrete members/structures and fabrication of test specimens that experienced accelerated ASR progression. Based on this research, I authored or co-authored eleven technical reports, peer-reviewed journal publications, and conference proceedings, involving ASR-specific research dating back to 2007.

Q23. Are you familiar with the sections of the LAR (as defined in A36) that are relevant to the technical issues raised in the contention?

A23. (OB) Yes. I am familiar with the technical issues related to the structural impacts of ASR on reinforced concrete structures. I also have personal knowledge of the initial concept, planning, and execution of the LSTP and evaluation of LSTP results as applicable to the LAR. I served as the research supervisor for the LSTP conducted at the FSEL.

In addition, I was involved in the evaluation of ASR at Seabrook Station in several ways. I prepared two white papers for NextEra to provide information on ASR and its structural implications, and conservatism of ACI 318 design expressions for shear and reinforcing bar anchorage. I participated in several plant walkdowns with MPR personnel to inspect ASR-affected locations at Seabrook in 2012 and also in 2018. I reviewed the 2012 interim structural assessment prepared by MPR.

I am also knowledgeable of technical documents that form the basis of the LAR and calculations that implement the application of test results to Seabrook structures. Thus, I have personal knowledge of the application of LSTP results to reinforced concrete structures at Seabrook, including as inputs to Seabrook's SMP and as inputs to the methodology for evaluating ASR-affected structures.

I also examined the portions of the LAR that address the issues being litigated in this proceeding.

Q24. Please further describe the basis for your familiarity with these aspects of the LAR and the associated technical issues raised in the contention.

A24. (OB) I was the principal investigator and research supervisor for all LSTP efforts conducted at FSEL. In general, I have reviewed various materials in preparing this testimony, including those portions of the LAR relating to FSEL testing. I also reviewed C-10's exhibits, which are discussed in Answer A45, below. I reviewed the Board's orders on this contention, including the admissibility decision for this contention (LBP-17-07), dated October 6, 2017, and the exhibits submitted by C-10 that are relevant to my testimony. I have reviewed various materials in preparing this testimony, including those listed in A45 to A48, below.

E. <u>Edward Carley ("EC")</u>

Q25. Please state your full name.

A25. (EC) My name is Edward J. Carley.

Q26. By whom are you employed and what is your position?

A26. (EC) I am employed by NextEra as a Nuclear Engineering Supervisor for Seabrook.

Q27. Please describe your role in this proceeding.

A27. (EC) I am involved in this proceeding as a NextEra witness in connection with the adjudication of the admitted contention. My role is to provide relevant information regarding the development of the LAR to address ASR-affected concrete structures and the development and the implementation of the ASR-related monitoring programs at Seabrook to validate that progression of ASR remains within the limits established through the LSTP.

Q28. Please describe your educational and professional qualifications, including relevant professional activities.

A28. (EC) My professional and educational qualifications are described in my resume (NER011). I received an Associate of Science Degree in Nuclear Engineering Technology from Hartford State Technical College in 1979. I received a Bachelor of Science Degree in Nuclear Engineering in 1981 and Master of Science degree in Energy Engineering in 1991 from the University of Lowell.

I have more than 38 years of professional experience in the nuclear power industry. I have worked at Seabrook for the past 36 years, and have held progressively more responsible roles as an Engineer in the engineering and licensing organization.

Q29. Are you familiar with the sections of the LAR (as defined in A36) that are relevant to the technical issues raised in the contention?

A29. (EC) Yes. I am familiar with the technical issues related to the development of the LAR and the implementation of the ASR-related monitoring programs at the plant. I have personal knowledge of the development, and subsequent revision, of the portions of the LAR that address such issues, including the ASR expansion monitoring and assessment activities at the station.

Q30. Please further describe the basis for your familiarity with these aspects of the LAR and the associated technical issues raised in the contention.

A30. (EC) In my capacity as a Nuclear Engineering Supervisor, I have been responsible for supervising NextEra and contracted team members during the development and regulatory review of the site's LAR including the development of the overall methodology for evaluating ASR-affected concrete structure and the incorporation of the technical information obtained from the LSTP. In addition, I supervised the development of the first-in-the-industry aging management programs for ASR as part of Seabrook's License Renewal Application. I am also responsible for Seabrook's implementation of the SMP and application of the ASR methodology used for evaluation of ASR-affected concrete structures at Seabrook. I have reviewed various materials in preparing this testimony, including those listed in A45 to A48, below.

II. OVERVIEW OF CONTENTION

Q31. Please briefly describe the purpose and need for the LAR.

A31. (MC, JS, EC) Seabrook's licensing basis—specifically, its Updated Final Safety Analysis Report ("UFSAR")—includes methods for performing structural evaluations on Seabrook's Containment Building ("Containment") and certain other structures at the plant that must fulfill their design function following a design basis earthquake, known as "seismic Category I structures." These methods are based on design and construction codes developed by the ACI and the American Society of Mechanical Engineers ("ASME"). The methods ensure that Seabrook's license complies with requirements in 10 C.F.R. Part 50, Appendix A, known as the General Design Criteria for Nuclear Power Plants ("GDC"). In simplified terms, these analyses compare the ability of a structure to carry load (i.e., structural *capacity*) with the potential loads that could be applied (i.e., structural *demand*) to verify structural sufficiency.

In 2009, NextEra initially identified visual indications of ASR in concrete at Seabrook. The presence of ASR was confirmed through petrographic analysis of cores removed from plant structures in August 2010. The structural design basis codes in Seabrook's UFSAR (ACI 318, 1971 Edition and ASME Section 3, 1975 Edition) did not provide a method to account for the impacts of ASR on structural adequacy (impact on structural capacity; impact on structural demand). Thus, NextEra and its consultants developed a methodology to supplement the existing design basis codes to account for ASR loads.

On August 1, 2016, NextEra submitted an LAR package to the NRC seeking approval to revise Seabrook's UFSAR (which requires a license amendment) to incorporate an overall methodology for addressing ASR in reinforced concrete structures at the plant. Importantly, this overall methodology includes an analytical approach for evaluating ASR-affected concrete structures using the original licensing basis design codes while accounting for the effects of ASR

on design basis loads. The overall methodology also specifies parameters, frequencies, and acceptance criteria for monitoring of ASR progression to validate applicability of the LSTP conclusions, which are inputs to the analytical approach for structural evaluations.

Q32. Please briefly describe the activities undertaken by NextEra and its consultants to evaluate ASR and how those efforts contributed to development of the LAR methodology.

A32. (MC, JS, CB, OB, EC) NextEra and its consultants, including MPR and Simpson, Gumpertz, & Heger ("SGH"), undertook various activities to develop a methodology to be used at Seabrook to account for the impacts of ASR on both structural capacity and structural demand. First, we researched available academic and engineering literature and test data. However, we found that there were significant gaps in the literature regarding the extent to which ASR expansion affects structural *capacity* of reinforced concrete elements. In addition, the published information that was available came from testing that was poorly representative of concrete structures at Seabrook. Thus, we concluded that large-scale load testing of specimens more representative of Seabrook would be required to provide additional relevant information. In parallel, NextEra developed an analysis methodology for structures at Seabrook affected by ASR. The proposed (and now implemented) structural analysis methodology uses the conclusions from the LSTP that the code expressions from Seabrook's design basis remain valid for ASR-affected concrete. This conclusion can be applied provided that maximum levels of ASR expansion in the plant structures remain within the limits of the expansion exhibited by specimens used in the LSTP. This test program also provides the basis for part of the monitoring approach for ASR, which is presented in the LAR and detailed in the Seabrook SMP.

Q33. Are there any published documents that provide industry-accepted guidance on how to address ASR in concrete structures?

A33. (JS, CB, OB, EC) Yes. There are many industry guidance documents on concrete degradation (in general) and ASR (in particular). Key sources used by NextEra and its consultants include the following documents:

- The Institution of Structural Engineers, "Structural Effects of Alkali-Silica Reaction" (July 1992) ("ISE Guideline") (NER012);
- U.S. Department of Transportation, Federal Highway Administration, "Report on the Diagnosis, Prognosis, and Mitigation of Alkali-Silica Reaction (ASR) in Transportation Structures" (FHWA-HIF-09-004) (Jan. 2010) ("FHWA Guideline") (NER013); and
- Canadian Standard Association International, "Guide to the Evaluation and Management of Concrete Structures Affected by Aggregate Reaction," General Instruction No. 1, A864-00, (Feb. 2000), Reaffirmed 2005 ("CSA Guideline") (NRC076).

These documents continue to be representative of current industry guidance for addressing ASR and are used throughout our testimony.

Q34. Please describe the LAR package submitted to the NRC on August 1, 2016.

A34. (MC, JS, CB, EC) The August 1, 2016 LAR package ("Original LAR") included eight enclosures. Those documents included NextEra's summary evaluation of the proposed changes ("LAR Evaluation") with an attachment of the proposed mark-up of Seabrook's UFSAR pages ("UFSAR Markup") (collectively INT010 (non-proprietary ("NP")) and NRC089 (proprietary ("P")), plus an SGH document describing the process for developing load factors for the structural analyses (INT013), and two key technical documents from MPR pertaining to the LSTP:

- MPR-4273, Rev. 0, "Seabrook Station - Implications of Large-Scale Test Program Results on Reinforced Concrete Affected by Alkali-Silica Reaction" (July 2016) (NRC008); and

- MPR-4288, Rev. 0, "Seabrook Station: Impact of Alkali-Silica Reaction on Structural Design Evaluations" (July 2016) ("MPR-4288") (INT012)(NP), (INT014)(P).

MPR-4273 provides an overview of the LSTP, its key conclusions, and the implications of those conclusions on reinforced concrete at Seabrook. MPR-4273 has been revised to Revision 1, dated March 2018 ("MPR-4273") (INT019-R)(NP), (INT021)(P). This revision incorporated refinements to the approach for assessing expansion behavior at Seabrook. MPR-4273 is a summary document that referenced the test data and additional details on the LSTP from other MPR reports (*see* A99). MPR-4288 uses information from the LSTP and other published technical literature to evaluate the impact of ASR on structural limit states and additional design considerations.

Q35. Did NextEra supplement its LAR?

A35. (MC, JS, CB, EC) Yes. NextEra supplemented the LAR on September 30, 2016 ("LAR Supplement") (NRC010) in response to NRC Staff Requests for Supplemental Information. The LAR Supplement also contained enclosures, including:

- MPR-4153, Rev. 2, "Seabrook Station - Approach for Determining Through-Thickness Expansion from Alkali-Silica Reaction" (July 2016) (NRC012); and
- Simpson Gumpertz & Heger, Inc., Rev. 0, "Evaluation and Design Confirmation of As Deformed CEB," 150252-CA-02, (July 2016) ("SGH Evaluation") (INT015).

MPR-4153 is a report that describes the methodology for estimating expansion in the through-thickness direction prior to installing an extensometer to monitor through-thickness expansion at Seabrook. The report provides the basis for using a correlation between elastic modulus and expansion that was determined using data from the LSTP. MPR-4153 has been revised to Revision 3, dated September 2017 ("MPR-4153") (INT018-R)(NP), (INT020)(P).

This report was revised to incorporate additional literature data for comparison with the methodology.

The SGH Evaluation (INT015) is the evaluation of the Containment Enclosure Building ("CEB"), an ASR-affected structure at Seabrook. At the request of the NRC Staff, the CEB calculation was provided as an example of how the proposed methodology for building deformation assessments was implemented and to demonstrate how threshold limits were established by the analysis. This evaluation is a Stage Three analysis, which is the most complex of the potential analyses identified in the LAR.

Q36. Did NextEra submit any other supplements to the LAR docket?

A36. (MC, JS, CB, EC) Yes. NextEra supplemented its Original LAR and LAR Supplement with written responses to various requests for additional information ("RAI") from the NRC Staff. These responses, which supplement the application, are dated October 3, 2017 (NRC013); December 11, 2017 (NRC014); and June 7, 2018 (NRC015) ("RAI Responses"). Collectively, the Original LAR, LAR Supplement, and RAI Responses constitute the full "LAR." The RAI responses included the Structural Evaluation Methodology ("SEM") Document (SGH Document No. 170444-MD-01, Rev. 1 "Methodology for the Analysis of Seismic Category I Structures with Concrete Affected by Alkali-Silica Reaction" (May 31, 2018) (INT022)), which defines the analytical methodology used to evaluate ASR-affected structures at Seabrook.

Q37. Are you familiar with the Contentions originally proposed by C-10?

A37. (MC, JS, CB, OB, EC) Yes. We reviewed C-10's "Petition for leave to intervene: Nuclear Regulatory Commission Docket No. 50-443," dated April 10, 2017. C-10 originally proposed ten contentions. Briefly summarized, those contentions alleged as follows:

A. Visual inspection, crack width indexing, and extensometer deployment are not sufficient tools for determining the presence and extent of ASR in safety-related structures at Seabrook.

B. Expansion occurring within a reinforced concrete structure due to ASR is not equivalent to a "pre-stressing" effect.

C. Thorough petrographic analysis, including core sample testing of Seabrook's in-situ concrete, must be integral to NRCs determination of the advance of ASR.

D. The LSTP, undertaken for NextEra at the Ferguson Structural Engineering Laboratory (FSEL), has yielded data that are not "representative" of the progression of ASR at Seabrook.

E. Maintaining data from the FSEL testing as proprietary is not good science, and undermines any trust within the nearby communities that the ASR problem is being handled with the public's best interests at heart.

F. Assumptions made by NextEra and MPR concerning the continued robustness of reinforcing steel in Seabrook structures are at odds with clear evidence of the in-situ chemistry necessary for corrosion.

G. While there is acknowledgement of the progressive nature of ASR, to our knowledge, there has been no testing, nor proposed future testing, to the point of failure/limit state.

H. The LAR's proposed inspection intervals cannot effectively measure the ongoing effects of ASR to structures at the Seabrook Nuclear Power Plant.

I. Completely omitted from the LAR is any accounting for the change in impact of ASR on the portions of the plant exposed to, or affected by, increasingly severe coastal storms and predicted sea level rise.

J. The language used in LAR 16-03 is inappropriate for a document written for the purpose of demonstrating objectivity in the testing.

Q38. Are you familiar with the Contention as admitted by the Board on October 6, 2017?

A38. (MC, JS, CB, OB, EC) Yes. The Board found portions of five contentions—A, B, C, D, and H—admissible, but rejected the remaining contentions. The Board reformulated the admissible portions into a single admitted contention, as follows:

> The large-scale test program, undertaken for NextEra at the FSEL, has yielded data that are not "representative" of the progression of ASR at Seabrook. As a result, the proposed monitoring, acceptance criteria, and inspection intervals are not adequate.

The Board emphasized that "the key issue is Contention D's challenge to the representativeness of the large-scale test program," and explained that the remaining portions of the admitted contentions (A, B, C, and H) asserted "consequences" stemming from this alleged lack of representativeness.

Q39. What is meant by the term "representativeness"?

A39. (MC, JS, CB, OB, EC) "Representativeness," as used in this context, refers to the ability to apply conclusions from one application to inform circumstances in another application. Engineers commonly use this process, whereby knowledge obtained from a technical paper, textbook, design code, or experiment is applied to an actual system, structure, component, etc., without having to perform explicit testing on the object(s) in question. For this approach to be successful, the basis for the knowledge must be sufficiently representative of the object in question to be applicable. It should be noted that "representativeness" is not the same as replication, which is often not feasible, not appropriate, or not necessary for many reasons. As examples:

- Large complex structures cannot be destructively tested in-service under design basis loading conditions (e.g., seismic loading) while performing their design function. Also, duplication of such structures would be prohibitively expensive.
- A test method that relies on replication of a particular structure would have limited applicability to other structures.
- Replicated structures would not be useful for investigations on aging effects, because aging effects on the replicated structure would always lag behind the aging effect on the actual structure.

In the context of the admitted contention, "representativeness" refers to the results from the LSTP and their applicability to reinforced concrete structures at Seabrook. The specific reasons for the approach selected for the LSTP are addressed throughout our testimony.

Q40. Did NextEra's Original LAR address the topic of "representativeness"?

A40. (MC, JS, CB, OB, EC) Yes. Section 3.2 of the LAR Evaluation ((INT010)(NP), (NRC089)(P)), explained that the specimens used in the FSEL testing were structurally representative of concrete used in constructing Seabrook structures. The impetus for performing the LSTP was the lack of representativeness among published literature data, so NextEra and its consultants designed the LSTP test specimens with a particular focus on representativeness. Accordingly, MPR-4273, Rev. 0 (NRC008), an attachment to the Original LAR, includes discussions throughout the document explaining representativeness considerations and the measures taken during the LSTP to establish representativeness of the test results.

In particular, MPR-4273, Rev. 0 (NRC008) includes an important discussion—Section 2.4.2—titled "Representativeness Objectives of Test Programs." This section describes the key features of the LSTP's programmatic design for representativeness, and the subsequent sections of the report expand upon those features with additional details. More specifically, the key features include (1) the large, to-scale size of the test specimens, (2) experimental setups designed to be consistent with those used to develop the Code expressions in the plant's design basis, (3) test specimens with reinforcement configurations that reflect the most essential features of plant structures, (4) test specimens with a concrete mixture design that reflects the critical characteristics of the concrete mixtures used to construct plant structures, and (5) ASR distress at levels currently observed at Seabrook and also at higher levels to reflect a potential future state.

Q41. Did NextEra present information regarding ASR to any other independent technical reviewers?

A41. (MC, EC) Yes. NextEra presented its methodology for evaluating and monitoring ASR-affected concrete structures to the ACRS on October 31, 2018. The NRC Staff

also discussed the Draft Safety Evaluation ("Draft SE") (dated Sept. 28, 2018) (NRC047), at this meeting, which concluded that:

> the proposed plant-specific method of evaluation for design evaluation of seismic Category I reinforced concrete structures affected by ASR at Seabrook is acceptable and provides reasonable assurance that these structures continue to meet the relevant requirements of 10 CFR Part 50, Appendix A, GDC 1, 2, 4, 16 (Containment only) and 50 (Containment only), and 10 CFR Part 50, Appendix B.

The ACRS is an independent body statutorily mandated by Section 29 of the Atomic Energy Act of 1954, as amended. Its members—who are drawn from outside organizations, national laboratories, and academic institutions—are appointed to four-year terms of service and report directly to the Commission. Among other things, the ACRS is tasked with reviewing and providing independent evaluations of technical and safety-related matters in certain NRC reactor licensing actions.

Q42. Did the ACRS evaluate NextEra's LAR and the Staff's Draft SE?

A42. (MC, EC) Yes. Based on the presentations by NextEra and by the NRC Staff to the ACRS, and the panel's review of the technical documentation, the ACRS issued a letter on December 14, 2018 (NRC048) to the Chairman of the Commission documenting its independent review, which encompassed both the LAR and Seabrook's separate License Renewal Application. The ACRS reached three conclusions:

1. NextEra License Amendment Request 16-03 establishes a robust analytical methodology, supported by a comprehensive large scale test program, for the treatment and monitoring of alkali-silica reaction-affected seismic Category I structures at Seabrook.

2. The NextEra License Renewal Application includes two new Aging Management Programs to monitor alkali-silica reaction and building deformation. These incorporate the test program results and license amendment request methodology and assure that the effects of alkali-silica reaction will be effectively tracked and evaluated through the end of the License Renewal Application period of extended operation.

3. The staff safety evaluations of the license amendment request and alkali-silica reaction related Aging Management Programs in the License Renewal Application provide thorough assessments and findings. We agree with the staff's conclusion that NextEra's programs are acceptable.

We note that the ACRS panel that reviewed the LAR included members with expertise in structural engineering and material science. Further, they had received briefings from EPRI, DOE, and the NRC Office of Research on the research on concrete degradation including degradation by ASR.

Q43. Did the NRC Staff approve NextEra's LAR in a final safety evaluation?

A43. (MC, EC) Yes. On March 11, 2019, the NRC Staff issued its final safety evaluation ("Final SE") (INT025) related to NextEra's LAR. The Staff's final conclusion was unchanged from the Draft SE (*see* A41).

Q44. What activities are called for in the approved license amendment?

A44. (MC, EC) The amendment authorizes revision of the Seabrook Station, Unit No. 1, UFSAR, consistent with the LAR (and its supplements) and the Final SE.

Q45. What statements of position, testimony, and exhibits have you reviewed in preparation for the hearing?

A45. (MC, JS, CB, OB, EC) At this time, we have reviewed the following documents, filed by C-10, to the extent they are relevant to our testimony:

- C-10's Initial Statement of Position on C-10's Contentions Regarding NextEra's Program for Managing ASR at Seabrook Station Nuclear Power Plant, dated June 10, 2019;
- Summary of Testimony of Victor E. Saouma, Ph. D., Regarding Scientific Evaluation of NextEra's Aging Management Program for Alkali-Silica Reaction at the Seabrook Nuclear Power Plant (June 10, 2019) (INT002);
- Pre-filed Opening Testimony of Victor E. Saouma, Ph. D., Regarding Scientific Evaluation of NextEra's Aging Management Program for Alkali-Silica Reaction at the Seabrook Nuclear Power Plant (June 10, 2019) (INT001-R-R); and

- Appendix A (Exhibit List) of C-10's Initial Statement of Position and key documents listed therein.

Q46. What other materials have you reviewed or do you expect to review in the preparation of your testimony?

A46. (MC, JS, CB, OB, EC) We have reviewed numerous documents in preparing this testimony, including, for example, those portions of NextEra's LAR relating to the LSTP, and the pertinent portions of NRC regulations and guidance documents.

We will review the NRC Staff's prefiled testimony, statement of position, and exhibits, and C-10's rebuttal testimony when those documents are filed.

Q47. Do you recognize Exhibit NER005?

A47. (MC, JS, CB, OB, EC) Yes. It is a list of NextEra's exhibits, and includes those documents which we referred to, used, or relied upon in preparing this testimony, including relevant codes, research reports, and guidance documents.

Q48. Do you recognize Exhibits NER002-NER004, NER006-NER030, NER037, and NER045-NER048?

A48. (MC, JS, CB, OB, EC) Yes. These are true and accurate copies of the documents that we have referred to, used, and/or relied upon in preparing the respective parts of our testimony. In those cases in which we have attached only an excerpt of a document as an exhibit, that is noted on NextEra's exhibit list.

Q49. How do these documents relate to the work that you do as an expert in forming opinions such as those contained in this testimony?

A49. (MC, JS, CB, OB, EC) These documents represent the type of information that persons within our fields of expertise reasonably rely upon in forming opinions of the type offered in this testimony. Many are documents prepared by government agencies, peer-reviewed articles, or documents prepared by NextEra or the utility industry. We note that we do not offer legal opinions on the NRC regulations or adjudicatory decisions discussed in our testimony.

However, reading those regulations and decisions as technical statements, and using our expertise and experience, we can interpret the meaning of those documents as they relate to how NextEra has addressed the issues raised in this contention. To the extent our testimony provides technical expert opinions on the requirements of NRC regulations, we believe that such opinions will be helpful to the Board inasmuch as they provide to the Board insights into NextEra's and the NRC Staff's processes for complying with the applicable regulations.

III. SUMMARY OF DIRECT TESTIMONY AND CONCLUSIONS

Q50. What is the purpose of your testimony?

A50. (MC, JS, CB, OB, EC) The purpose of our testimony is to demonstrate that the contention lacks merit, and, accordingly, should be resolved in NextEra's favor. In particular, we demonstrate that the LAR is based on a comprehensive review of available research and technical information. It provides reasonable assurance that the overall methodology for addressing ASR-affected structures at Seabrook is satisfactory for ensuring that these structures can fulfill their design basis in accordance with applicable NRC regulations, guidance, and precedent. Specifically, the methodology in the LAR provides reasonable assurance that reinforced concrete structures at Seabrook will continue to meet the relevant requirements of 10 C.F.R. Part 50, Appendix A, GDC 1, 2, 4, 16 and 50 (Containment only for GDC 16 and 50), and 10 C.F.R. Part 50, Appendix B. In our professional opinions, C-10 fails to show that the LAR has any deficiency in this regard.

Q51. Please describe the scope of your testimony.

A51. (MC, JS, CB, OB, EC) Our testimony identifies and describes the pertinent portions of the LAR with a focus on the LSTP and the justification that the conclusions are applicable for Seabrook, because the testing was appropriately representative.

Q52. Please provide an overview of your testimony.

A52. (MC, JS, CB, OB, EC) Our testimony begins with a background discussion on structural design fundamentals for reinforced concrete that pertain to this contention and an overview of the ASR degradation mechanism. We then discuss the history of ASR at Seabrook, including the discovery of ASR, steps for initial assessment, and determination of the needs for additional testing and a LAR. Our testimony provides an overview of the methodology for assessing ASR at Seabrook and the associated LAR, focusing on how insights from the LSTP are

used. (Additional discussion on the analysis methodology is provided in separate testimony from SGH.) To specifically address the admitted contention, we provide a detailed discussion on the approach and results from the LSTP with an emphasis on the basis for establishing representativeness to Seabrook. We then discuss the monitoring program at Seabrook, including the monitoring methods used at the plant, monitoring frequencies, and acceptance criteria. The license condition that NextEra agreed to incorporate with the LAR pertains to representativeness of the LSTP and is also discussed in our testimony. Finally, we address several specific claims included in Dr. Saouma's testimony from June 10, 2019 and selected claims from C-10's original petition to the extent they may still be relevant. To facilitate readability, we have included a Table of Acronyms at the beginning of this document and a Glossary of Terms as Attachment 1 to our testimony ("Glossary") (NER002).

In addition, the specifics of the LSTP and the quantitative results are proprietary to NextEra and MPR. We have prepared our testimony such that the main body is entirely non-proprietary. Proprietary content is contained in Attachment 2 to our testimony, which is a proprietary appendix of tables and figures ("Proprietary Appendix") (NER003), and is cited within the main body of our testimony.

Q53. Please summarize Dr. Saouma's claims proffered in support of the contention.

A53. (MC, JS, CB, OB, EC) The key allegations in Dr. Saouma's initial prefiled Testimony and Report ("Saouma Testimony") (INT001-R-R), and as summarized by the C-10 Initial Statement of Position, are that:

- NextEra has failed to meet its burden of proving that its program for monitoring the progress of ASR at Seabrook is based on an adequate understanding of the condition of the Seabrook concrete or that it contains effective monitoring measures.

- Both the testing and analytical methods that underlie the monitoring program "are substandard and inadequate to support any conclusion that the ability of the Seabrook containment to withstand a design basis earthquake has not been unduly compromised by the presence of ASR."

- On the bases discussed above, the monitoring program is also substandard.

Our testimony demonstrates that these claims lack merit.

Although a complete appraisal of a structure requires consideration of all applicable limit states and structural design considerations, Dr. Saouma's testimony places particular focus on the shear test program. Based on his filing for the Emergency Petition (V. Saouma, "Review of Selected Documents Pertaining to the Structural Evaluation of Seabrook Nuclear Power Plant" (Feb. 12, 2019) ("Saouma Review") (INT007)), we interpret that shear is his area of expertise, rather than the limit states for the other test programs in the LSTP. In Section 6 of the Saouma Review, he states that "I have not commented on the anchorage tests and I do not feel sufficiently qualified to address them." *Id*. at 18. Thus, while our testimony covers the entire scope of the LSTP, we provide additional content pertaining to the shear test program, commensurate with a response to Dr. Saouma's testimony.

Q54. Do you disagree with Dr. Saouma's and C-10's claims as set forth in the contention?

A54. (MC, JS, CB, OB, EC) Yes, we disagree with Dr. Saouma's and C-10's claims. The admitted contention focuses on whether the LSTP is sufficiently representative of Seabrook to appropriately apply the conclusions. As addressed fully below, NextEra, its contractors, multiple independent reviewers, and the NRC thoroughly evaluated the concept of representativeness to ensure applicability of the conclusions to Seabrook. Furthermore, Seabrook has committed to several future actions that will provide additional information to compare expansion behavior at Seabrook to the LSTP specimens. This comparison will provide an additional check on the representativeness of the LSTP using data specifically obtained from

Seabrook. Because the LSTP conclusions are representative of concrete at Seabrook, usage of the LSTP conclusions as a technical reference in the SMP is appropriate.

Section A.5 of Dr. Saouma's testimony identifies the documents that he reviewed during preparation of his written testimony. *See* Saouma Testimony at 3-4 (INT001-R). The indicated documents constitute only a small fraction of the total documentation of the ASR effort at Seabrook Station and reflect the highest-tier documents. Many of the details that Dr. Saouma criticizes in his testimony as missing or incomplete are actually presented in depth in NextEra documents that Dr. Saouma does not reference. Our testimony specifically identifies the locations in NextEra documents where Dr. Saouma's questions are addressed.

IV. OVERVIEW OF REGULATORY REQUIREMENTS AND GUIDANCE

Q55. Please identify and briefly describe the NRC regulations applicable to the LAR.

A55. (MC, EC) As to procedural licensing matters, Title 10 of the Code of Federal Regulations ("10 C.F.R.") section 50.59(c)(2)(viii) requires a licensee to obtain a license amendment pursuant to 10 C.F.R. § 50.90, "Application for amendment of license, construction permit, or early site permit," prior to implementing a proposed change if the change would "[r]esult in a departure from a method of evaluation described in the [Final Safety Analysis Report or] FSAR (as updated) used in establishing the design bases or in the safety analyses." 10 C.F.R. § 50.59(c)(2)(viii).

Q56. What findings must the NRC make to issue the license amendment?

A56. (MC, EC) Pursuant to 10 C.F.R. §§ 50.92 and 50.57(a)(3) and (6), to grant the LAR, the NRC must find that: (1) there is reasonable assurance that the health and safety of the public will not be endangered by operation of the plant as proposed in the LAR, (2) there is reasonable assurance that such activities will be conducted in compliance with the Commission's regulations, and (3) the issuance of the amendment will not be inimical to the common defense and security or to the health and safety of the public.

Q57. What is your understanding of "reasonable assurance"?

A57. (JS, CB, EC, MC) The NRC's statutory mandate is to provide "reasonable assurance" of adequate protection of public health and safety. This standard was articulated in the Atomic Energy Act of 1954 (Pub. L. No. 83-703, 68 Stat. 919 (1954)).

Over the years, the NRC has provided interpretations of the phrase "reasonable assurance." In a May 11, 2018 letter to the House Committee on Energy and Commerce, Commissioner Burns is cited as stating that reasonable assurance "is not absolute assurance of

protection or an expectation of 100% risk free . . . An essential function of the NRC is to determine how much risk is acceptable when establishing its regulatory requirements."[2] The letter goes on to state that "the NRC establishes regulatory requirements that are sufficiently protective of health and safety notwithstanding some amount of risk that has been deemed acceptable."

Q58. Do any NRC regulations pertain to the underlying technical issues implicated in the LAR?

A58. (MC, JS, CB, EC) Yes. The LAR implicates GDC 1, 2, 4, 16, and 50, which are codified in 10 C.F.R. Part 50, Appendix A. In relevant part, these criteria state as follows:

> Criterion 1 - Quality standards and records: Structures, systems, and components important to safety shall be designed, fabricated, erected, and tested to quality standards commensurate with the importance of the safety functions to be performed. Where generally recognized codes and standards are used, they shall be identified and evaluated to determine their applicability, adequacy, and sufficiency and shall be supplemented or modified as necessary to assure a quality product in keeping the with the required safety function. A quality assurance program shall be established and implemented in order to provide adequate assurance that these structures, systems, and components will satisfactorily perform their safety functions.
>
> Criterion 2 - Design bases for protection against natural phenomena: Structures, systems, and components important to safety shall be designed to withstand the effects of natural phenomena such as earthquakes, tornadoes, hurricanes, floods, tsunami, and seiches without loss of capability to perform their safety functions. The design bases for these structures, systems, and components shall reflect: (1) appropriate consideration of the most severe of the natural phenomena that have been historically reported for the site and surrounding area, with sufficient margin for the limited accuracy, quantity, and period of time in which the historical data have been accumulated, (2) appropriate combinations of the effects of normal and accident conditions with the effects of the natural phenomena and (3) the importance of the safety functions to be performed.
>
> Criterion 4 - Environmental and dynamic missile design bases: Structures, systems, and components important to safety shall be designed to accommodate the effects of and to be compatible with the environmental conditions associated

[2] Letter from E. Dacus, NRC, to Hon. F. Upton, U.S. House of Representatives, Encl. at 20 (May 11, 2018), *available at* http://docs.house.gov/meetings/IF/IF03/20180320/108033/HHRG-115-IF03-Wstate-BurnsS-20180320-SD015.pdf.

> with normal operation, maintenance, testing, and postulated accidents, including loss-of-coolant accidents. These structures, systems, and components shall be appropriately protected against dynamic effects, including the effects of missiles, pipe whipping, and discharging fluids, that may result from equipment failures and from events and conditions outside the nuclear power unit.
>
> Criterion 16 - Containment design: Reactor containment and associated systems shall be provided to establish an essentially leak-tight barrier against the uncontrolled release of radioactivity to the environment and to assure that the containment design conditions important to safety are not exceeded for as long as postulated accident conditions require.
>
> Criterion 50 - Containment design basis: The reactor containment structure . . . shall be designed so that the containment structure and its internal compartments can accommodate, without exceeding the design leakage rate and with sufficient margin, the calculated pressure and temperature conditions resulting from any loss-of-coolant accident. This margin shall reflect consideration of . . . the conservatism of the calculation model and input parameters.

Finally, the activities related to the changes proposed in the LAR are subject to the NRC's Quality Assurance ("QA") regulations in Appendix B to 10 C.F.R. Part 50, "Quality Assurance Criteria for Nuclear Power Plants and Fuel Reprocessing Plants."

Q59. Do these NRC regulations define "representativeness?"

A59. (MC, JS, CB, EC) No. The concept of representativeness is relevant to the design of any testing program being used to support a technical evaluation at a plant, but it is not directly discussed in NRC regulations.

Q60. What guidance documents has the NRC Staff issued to assist applicants in implementing the applicable regulations?

A60. (MC, JS, CB, EC) NUREG-0800, "Standard Review Plan ["SRP"] for the Review of Safety Analysis Reports for Nuclear Power Plants: LWR [Light-Water Reactor] Edition," ("NUREG-0800"), provides general guidance for the NRC Staff's review of the proposed method of analysis for the relevant GDC. However, there is no precedent for evaluating the effects of ASR on structural performance of the affected structures at NRC-licensed nuclear power plants. Thus, there is no directly-relevant technical NRC guidance for

this LAR, which involves first-of-a-kind review considerations regarding establishing the ASR loads, the technical bases for evaluation of ASR-affected concrete structures, and related structural monitoring none of which are covered by the construction codes of record.

The NRC has issued guidance on ASR pertaining to License Renewal Applications, most recently in NUREG-2191, "Generic Aging Lessons Learned [GALL] for Subsequent License Renewal Report" ("NUREG-2191"). This document identifies alkali-aggregate reaction as an aging mechanism for consideration, and specifically mentions ASR in the guidance for SMPs. With regard to the Operating Experience ("OE") element of the SMP, NUREG-2191 states the following:

> The program is informed and enhanced when necessary through the systematic and ongoing review of both plant-specific and industry OE including research and development such that the effectiveness of the AMP is evaluated consistent with the discussion in Appendix B of the GALL-SLR Report.

NUREG-2191 at X.M1-5 (NER014).

This guidance demonstrates that the NRC considers research and development external to the facility in question to be a potentially credible technical basis for monitoring and evaluation. In fact, as described in a presentation at the Regulatory Information Conference ("RIC") in 2018, NIST is currently performing a test program for the NRC on ASR that is intended to provide technical data supporting regulatory guidance to evaluate ASR-affected concrete. (The NIST program is discussed further in A104 and A125).

V. TECHNICAL BACKGROUND

A. Structural Design

Q61. Please provide an overview of reinforced concrete and why it is used in structural engineering.

A61. (JS, CB, OB) Concrete is comprised of several basic components: (1) coarse and fine aggregates, (gravel and sand, respectively) that provide strength; (2) cement, which functions as a glue that holds the aggregates together; and (3) water for cement hydration, which is the set of chemical reactions that transforms the cement from a dry powder to the "glue" that bonds the concrete constituents together.

Reinforced concrete is fabricated by placing wet (i.e., fresh) concrete into forms that contain mats of reinforcing bars ("rebar"). The concrete mixture is then allowed to cure, such that it is bonded to the steel bars. In general, plain concrete (unreinforced) is relatively strong in compression (i.e., loads that push the concrete together) and relatively weak in tension (i.e., loads that pull the concrete apart). The purpose of using reinforcing bars is to provide tensile capacity. In effect, tensile strength of concrete is not relied upon for many aspects of structural design, because tensile strength of typical concrete mixtures are roughly about $1/10^{th}$ the compressive strength of those mixtures. Reinforced concrete can be viewed as a composite, custom-made, structural material where concrete is used for its superior capacity in compression, and reinforcing steel is used to provide tensile strength, where needed.

Q62. What is the typical approach for design of reinforced concrete?

A62. (JS, CB, OB) Reinforced concrete structures are typically designed to satisfy the design requirements of an industry-accepted design code. The ACI Committee 318 maintains the "Building Code Requirements for Reinforced Concrete" ("ACI 318") and publishes revisions every few years. For nuclear power plants, ACI 318 is a typical code for buildings other than

Containment. Seabrook seismic Category I structures are designed in accordance with ACI 318, 1971 Edition ("ACI 318-71") (NRC049).

ACI 318 specifies requirements for certain limit states, which are modes by which the reinforced concrete member may be loaded. For reinforced (non-prestressed) concrete elements, the relevant limit states for design of structural elements include the following:

- Axial compression–Forces that compress (i.e., squeeze) a structural element together. Excessive axial compression loading will cause the element to crush.

- Flexure–Forces that cause a structural element to bend. Compression is applied on the inside radius of the bent member and tension is applied on the outside radius. For a concrete member, which is typically weaker in tension, excessive flexural loading will cause the element to split or tear (i.e., form a flexural tension crack) on the tension side. As a result, the primary (i.e., tensile) reinforcing bars are provided on the tension side of the element to increase flexural capacity.

- Beam (one-way) shear–Shearing forces are unaligned forces that push one part of the element in one direction and another part of the element in another direction. Beam shear applies these forces in uniform planes. Excessive one-way shear produces a diagonal failure plane between the unaligned, opposing forces.

- Punching (two-way) shear–For punching shear, force is applied locally, rather than in a uniform plane. Excessive punching shear force will puncture the element at the location of the local load.

- Reinforcement anchorage–The bond between the concrete and the embedded reinforcement is needed to ensure proper composite behavior of reinforced concrete. A loss of reinforcement anchorage would cause the reinforcing bars to "slip" within the concrete element, such that load cannot be transferred from the concrete to the reinforcing bars –and vice versa. In this case, the reinforcing bars would not be able to provide tensile load capacity to the concrete element –and therefore the concrete cannot be viewed as being properly reinforced.

ACI 318 also provides requirements for evaluating each limit state. ACI 318 uses "beam shear" expressions (i.e., formulas) for designing a variety of structural elements other than beams (e.g., walls, slabs, columns etc.). (The term "beam shear" simply denotes one of several possible behavioral modes for which structural elements are designed). The same design approach is used for all of these types of structural elements, even though they have different boundary

conditions (i.e., external influences on the structural element in question such as interactions with adjacent structural components). As an example, for a typical reinforced concrete slab that is directly supported on columns, design calculations would be performed to check the applicable limit states. The "beam shear" check is necessary for slab design, despite the fact that boundary conditions of a beam test do not reflect the boundary conditions of a slab panel.

Structural designers perform calculations that compare the ability of the structural member to withstand load (i.e., capacity) to the design basis loads that could be applied to the structure (i.e., demand). Typically, the concrete material property of compressive strength is a parameter in the Code expressions and is used as a direct input for determining structural capacity. The minimum compressive strength is defined as part of the structural design and is confirmed by compressive strength testing of cylinders made with the same concrete batch as was used for the structure in question. Demands include combinations of permanent loads (e.g., self-weight, installed equipment) and transient loads (e.g., movement of people or equipment, earthquakes). To establish structural adequacy, these calculations must show positive margin satisfying the requirements of the design code for specified load combinations.

Finally, ACI 318 compliant designs have variable levels of safety margins built in to them for different failure modes. A structural wall subjected to out-of-plane forces (e.g., hydrostatic pressure from groundwater) has a greater level of safety margin for shear than for flexure. Thus, a properly designed structure subjected to out of plane forces should never fail in shear. This approach ensures that the most desirable (i.e., ductile) failure mode governs the actual structural response with the intent of letting an over-loaded structure give ample visual warnings before failure.

Containment structures at nuclear power plants are typically designed in accordance with the ASME Boiler & Pressure Vessel Code ("ASME Code"). The Containment structure at Seabrook was designed in accordance with ASME Code, Section III, Division 2, 1975 Edition. (NRC050). As noted in that document, the provisions in this portion of the ASME Code were prepared by a joint ASME-ACI technical committee. The underlying bases behind ACI 318 and the portions of the ASME Code that are applicable to concrete are the same (as evidenced by the identical expressions for calculating parameters, including shear capacity and development length of reinforcement). For the purpose of our testimony, we will refer to ACI 318, but the fundamental principles of the discussion also apply to the relevant portions of the ASME Code.

Q63. How are the design expressions in ACI 318 determined?

A63. (JS, CB, OB) ACI 318 Code expressions are based on published data accumulated from many structural test programs that were conducted using a wide variety of test specimen constituents (e.g., aggregate material, cement type), dimensions, reinforcing bar details, and material properties of test specimens, as described in a 2010 technical paper by Reineck et al., "Extended Databases with Shear Tests on Structural Concrete Beams without and with Stirrups for the Assessment of Shear Design Procedures" ("Reineck 2010"), and expanded in 2013 paper by Reineck et al., "ACI-DAfStb Database of Shear Tests on Slender Reinforced Concrete Beams without Stirrups" ("Reineck 2013"). The ACI 318 Code expressions were developed using data from a broad array of test variables, resulting in an inherent technical basis for generic applicability among reinforced concrete structures. The Code committee deemed that these tests are sufficiently representative of the actual structures to which the expressions will be applied. Importantly, development and application of the Code expressions do not rely on testing of a replicate of a particular structure.

Q64. What is meant by prestressing of concrete and how does it affect structural performance?

A64. (JS, CB, OB) Prestressing of concrete refers to the approach of applying a compressive load to improve the tensile capacity of the concrete member. When the concrete member is in service, if tensile loads are applied, the compressive prestress (i.e., pre-compression) must be completely overcome before a portion of the member is exposed to net tension, at which point cracking may ensue. Because concrete is much stronger in compression than tension, prestressing can improve in-service performance for certain applications. As an example, a common approach for prestressing concrete is by "pretensioning" with steel cables. The concrete is placed (i.e., poured) over steel cables that are held in tension and the concrete is allowed to cure. Then, the tension on the cables is released, causing the cables (and surrounding concrete) to contract. Because the concrete is bonded to the cables, the load applied by the cables trying to contract is reacted by a compression force within the concrete, providing a compression load. In this way, a self-equilibrating set of forces are created in pretensioned concrete members, such as bridge girders.

The concept of prestressing is analogous to preloading of a bolt that is tightened into position. The compressive force (known as the clamping force) that was produced by tightening the bolt must be completely overcome before the connection held together by the bolt will loosen.

B. <u>Overview of ASR</u>

Q65. Please describe the chemical process known as alkali-silica reaction.

A65. (MC, JS, CB, OB, EC) ASR occurs in concrete when particular silica-containing constituents of the aggregate react with hydroxyl ions and alkali ions (e.g., sodium, potassium) from the cement or another source (e.g., salt). The reaction produces an alkali-silicate gel that

expands as it absorbs moisture, exerting tensile stress on the surrounding concrete and resulting in cracking. The reactivity of the aggregate depends on the crystalline structure and morphology of the silica (i.e., how the silica atoms are connected)–not just the presence or quantity of silica.

Dr. Saouma provides a similar discussion in Section B.1 of his testimony (INT001-R), and we agree with his characterization.

Q66. What are the potential implications associated with ASR?

A66. (MC, JS, CB, OB, EC) Fundamentally, ASR creates regions of expansion dispersed throughout the concrete, causing a concrete structural member to expand as a whole on the macro level. The expansion of each region is resisted by the surrounding components of the concrete. If the expansion pressure reaches a sufficient level, then microcracks can develop. As expansion continues and those microcracks join together, larger cracks may form.

Potential implications of ASR-induced expansion and cracking at the macro level fall into three general categories: (1) a decrease in the structural *capacity*, (2) an increase in structural *demand* if the expansion of concrete is restrained, and (3) functional impacts to attached *components* that are affected by deformations of the structural components to which they are attached, i.e., displacements from their original location.

Q67. How does ASR result in a structural impact?

A67. (MC, JS, CB, OB, EC) ASR can produce cracking in concrete, and eventually causes degradation of its material properties–compressive strength, elastic modulus, tensile strength, etc.–as measured from typical tests conducted on cylinders or cores. This effect has been demonstrated in laboratory tests and is cited in the ISE Guideline at 14, tbl. 4 (NER012) and the FHWA Guideline § 5.3.3 (NER013), among others. Because concrete material properties are used as direct inputs to Code expressions for determining structural capacity (e.g.,

ACI 318-71 § 11.4 (NRC049)), a decrease in concrete material properties implies a corresponding decrease in calculated structural capacity.

In addition, expansion of concrete by ASR or any other mechanism can produce a new load that is internal to the structure when this expansion is restrained by the surrounding concrete of a structural member or adjacent structural members. Such restraint results in new loads that can increase the demand on the structure.

Because ASR can reduce the available capacity and also increase the demand, the ASR aging mechanism can eventually challenge structural adequacy. In this context, challenged structural adequacy implies a reduced design margin for structural safety.

Q68. How does the presence of embedded reinforcing bars affect ASR-induced structural impacts?

A68. (MC, JS, CB, OB, EC) ASR-induced expansion applies a tensile load on the concrete that pulls the concrete apart. However, in reinforced concrete, the embedded reinforcing bars provide confinement that resists this expansion. In addition, when reinforcing bars are present to restrain the tensile force exerted by ASR expansion, an equivalent compressive force develops in the concrete, as necessitated by the equilibrium of forces. If external loads applied on the structure result in tensile stresses, the compressive stress caused by restraint of ASR expansion must be completely overcome before additional tensile load is reacted by the reinforcing bars. Hence, ASR produces a "chemical prestressing effect" that has an apparent benefit to structural performance (e.g., in shear), provided that the ASR is not so severe that anchorage of reinforcing bars is compromised or that spalling of cover concrete causes significant section loss in the structural member. This state of self-equilibrating stresses is similar to that discussed in A64.

ASR in reinforced concrete still causes a reduction in material properties like unreinforced concrete. However, in reinforced concrete, the presence of reinforcing bars and the consequent "chemical prestressing effect" causes the structural performance of ASR-affected reinforced concrete to depart from what would be calculated using the ASR-affected material properties as inputs to the code expressions. In summary, because of the internal prestressing forces, the performance of ASR-affected reinforced concrete is fundamentally different from that of ASR-affected concrete that is not reinforced or otherwise confined.

Q69. Does published literature acknowledge this "chemical prestressing effect"?

A69. (JS, CB, OB) Yes. The "chemical prestressing effect" is well-known in the concrete industry and is described in industry guidelines on ASR and published research. *See, e.g.*, ISE Guideline § 5.3.1 (NER012).

The presence of reinforcing bars has a significant effect on the impact of ASR on structural performance. As an example, test results from publicly available literature (e.g., Clayton et al., "The Effects of Alkali-Silica Reaction on the Strength of Prestressed Concrete Beams" (1990) and Deschenes et al., "ASR/DEF-Damaged Bent Caps: Shear Tests and Field Implications" (2009) ("Deschenes") (NRC075)) demonstrate that the presence of reinforcing bars, and the consequent "chemical prestressing" precluded shear performance of ASR-affected concrete from being adversely affected, even though calculations using the compressive strength of ASR-affected core samples suggested a substantial reduction in shear capacity.

Dating back to the late 1920s, as informed by research conducted at the University of Illinois Urbana Champaign (Richart et al, "The Failure of Plain and Spirally Reinforced Concrete in Compression" (1929)), the beneficial effects of confinement are recognized in the structural engineering community. With proper confinement, ordinary concrete can be made to support much greater stresses than unconfined (plain) concrete. As an extreme example, consider sand

confined in a steel pipe. Without the confinement (the steel pipe) sand cannot support any meaningful level of compression. With the help of confining stresses, substantial levels of axial compression can be supported by the "sand column" in the pipe. In this example, sand can be viewed as concrete decomposed into fine particles. Fundamentally, concrete placed in a reinforcing bar cage, can be confined in one-, two- or three-directions. If present, ASR causes concrete to expand and bear against the reinforcing bars. Reinforcing bars then apply confining stresses to the surrounding concrete, restraining the expansion. It is this restraint, or chemical prestress, that can effectively offset a certain level of ASR-induced degradation to material properties of unconfined concrete.

Section B.1 of Dr. Saouma's testimony acknowledges the prestressing effect and the test results that have shown an increase in shear strength as a result of ASR in *reinforced* concrete. Dr. Saouma also notes that shear strength of *plain* concrete is degraded by ASR. *See* Saouma Testimony at 6 (INT001-R). We agree with this discussion on the effects of ASR on reinforced and plain concrete.

Q70. How does the presence of embedded reinforcing bars affect expansion behavior?

A70. (JS, CB, OB) ASR causes expansion in concrete. This is to say, a typical, unit volume of concrete expands in all three directions. However, the presence of confinement restrains expansion parallel to the direction of confinement. More specifically, due to the confinement provided by embedded reinforcing bars, expansion would be restrained parallel to the direction of reinforcing bars. Thus, cracking perpendicular to the reinforcing bars would be less than cracking parallel to the reinforcing bars (provided that the perpendicular direction is unreinforced). This behavior was studied in a parametric study of thirty-three 19-inch reinforced concrete cubes with varying reinforcement configurations that were fabricated and monitored for

ongoing ASR expansions. *See* Allford, M., "Expansion Behavior of Reinforced Concrete Elements Due to Alkali-Silica Reaction" (Aug. 2016) (NER016) ("Allford Study"). The study affirmed that "expansion measured in the unreinforced directions were greater than those measured in reinforced directions, in all cases" and that "the directional distribution of volumetric expansions showed that expansion in the unreinforced direction accounted for more than one-third of any given volumetric expansion." *Id*. at 68 (the Allford Study was performed at the University of Texas at Austin, but was not part of the LSTP).

Photographs from specimens from the Allford Study are shown in Figure 1 below. Photograph (A) shows an unreinforced cube with random map cracking. Photograph (B) shows a cube with bidirectional reinforcement and the large crack parallel to the reinforcement resulting from expansion in the unreinforced direction. Photograph (C) shows a cube with reinforcement in all three directions and the very fine map cracking.

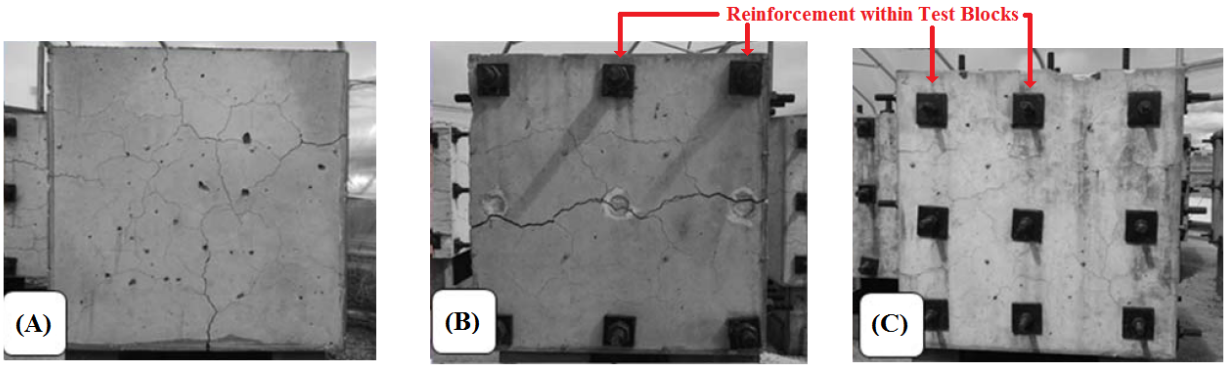

Figure 1 - Photographs from Allford Study (A) Unreinforced specimen; (B) Specimen with Bidirectional Reinforcement; (C) Specimen with Reinforcement in All Three Directions

Similarly, in a report from 2018, EPRI stated that "restrained expansion in one or more directions affects the development of ASR and results in anisotropic damage [not the same in every direction]." EPRI, "Evaluation of Laboratory Tests to Detect Up-to-Date Expansion and Remaining Expansion in Concrete Structures Affected by Alkali-Silica Reaction" at 1-2 (2018) ("EPRI Evaluation Report") (NER017).

Accordingly, for a given extent of ASR, a reinforced concrete structural component will exhibit lesser expansion than unreinforced concrete. Some reinforced concrete structural components contain reinforcing bars in only one or two directions, and are therefore more susceptible to preferential ASR induced expansion in the unreinforced directions. In such cases, expansion will occur preferentially, but not exclusively, in the unreinforced direction(s).

Section B.1 of Dr. Saouma's testimony also discusses expansion behavior of reinforced concrete and states that "confinement will inhibit ASR expansion" and "reorient it along the direction of least confinement." Saouma Testimony at 6 (INT001-R). We agree with this portion of his discussion.

Q71. How does ASR result in an impact to attached systems and components?

A71. (MC, JS, CB, OB, EC) For attached systems and components, the impact of ASR expansion is the dimensional changes of the structure that could affect performance of an attached component. Potential impacts depend on what is attached to the concrete. As an example, consider a pipe that is mounted to a wall. If ASR expansion causes movement of one portion of the wall, the attached pipe supports will move as well, potentially causing misalignment of the piping. Other example effects include decreasing seismic gap widths between buildings, doors that will not close, and tearing of attached seals.

While the expansion of ASR is very small on a percentage basis (on the order of 1 millimeter of expansion per 1 meter of concrete; or 0.1%) the accumulated displacement effect over a large component could cause a significant dimensional change (e.g., for a structural component that is 50 meters long (~165 feet) with expansion of 0.1%, total displacement would be 5 centimeters (~2 inches)).

Impacts to attached systems and components pertain to the ability of those systems and components to perform their design functions (e.g., for a pipe hanger to be positioned for proper

support of the piping). Such impacts, however, are not related to structural performance of the concrete for any of the limit states considered during design.

Q72. How is ASR typically identified and diagnosed in an actual structure?

A72. (JS, CB, OB) As discussed in the ISE Guideline and FHWA Guideline, the initial indication of ASR is usually the presence of unusual cracking that prompts further evaluation. *See* ISE Guideline § 6, p. 19 (NER012); FHWA Guideline § 1, p. 7 (NER013). In the case of ASR, this cracking is usually a network of very fine cracks that may appear to form a pattern or look like a map–hence the terms "pattern cracking" and "map cracking" as typical ASR symptoms. The responsible engineer would then perform a condition survey of the concrete to characterize the symptoms. If ASR is suspected, then a core would be obtained for examination by a petrographer to confirm the presence of ASR gel. This general approach is consistent with Figure 1 of the FHWA Guideline, which is also cited by Dr. Saouma as Figure 12 of his testimony. *See* Saouma Testimony at 20 (INT001-R).

Q73. What are the factors that influence the rate of ASR progression?

A73. (JS, CB, OB) ASR is a chemical reaction, so its rate is influenced by the concentrations of the species participating in the chemical reaction (i.e., the reactants) and the temperature. Higher concentration of reactants and higher temperature can both cause a faster rate. In addition, the presence of water also accelerates progression of ASR. After the reaction has occurred to form ASR gel, absorption of water causes the gel to expand and can eventually produce cracking in concrete. Cracking caused by ASR can allow water to enter the concrete more readily, which can accelerate degradation.

Q74. Are there methods for slowing or stopping ASR progression in a structure that is confirmed to have ASR?

A74. (JS, CB, OB) Concrete industry practice is to mitigate the potential for ASR before placement of concrete by selecting appropriate constituents for the concrete mixture design (e.g., by avoiding use of reactive aggregates and/or using materials like fly ash). For existing structures, the mitigation techniques are considerably less effective. One of the best approaches is to minimize intrusion of water and other species that could influence the reaction. However, such measures may not stop ASR from occurring because all of the reactants may be part of the original concrete mixture design, or may have been provided by previous water intrusion. Even without water intrusion, the internal humidity of the concrete is often sufficient to support ASR progression.

Researchers have been investigating methods for stopping degradation of ASR after it has been identified, but no reliable method has yet been devised that would work properly in the large reinforced concrete structures including nuclear plants like Seabrook.

Q75. Which of the ASR-related aging effects are related to representativeness of the LSTP?

A75. (MC, JS, CB, OB, EC) The purpose of the LSTP was to investigate the structural *capacity* of ASR-affected reinforced concrete in particular limit states. Therefore, ASR-induced reduction of structural capacity is the only aging effect that pertains to representativeness of the LSTP.

By contrast, the ASR-induced increases in structural demand and ASR-induced impacts on component functionality due to deformation are aging effects that are not related to representativeness of the LSTP. The LSTP did not evaluate changes to structural *demand* associated with ASR-induced expansion; NextEra is addressing that aging effect by obtaining actual expansion measurements from the plant and performing detailed structural calculations

(see SGH testimony for further details). The LSTP also did not investigate the effects of dimensional changes on specific *components*; NextEra is addressing this aging effect by obtaining pertinent data from the plant and performing component-specific evaluations, as necessary.

C. <u>Discovery of ASR at Seabrook and Initial Evaluation</u>

Q76. Please describe the initial identification of ASR at Seabrook.

A76. (MC, EC) NextEra first identified symptoms of ASR expansion at Seabrook in 2009 in the B Electrical Tunnel. In particular, plant personnel identified a matrix of interlocking, fine cracks—i.e., "map" cracking–that is a symptomatic of ASR. Figure 2 below shows a photograph of a portion of concrete from the B Electrical Tunnel that is approximately 30 inches × 30 inches. The "map" cracking that is characteristic of ASR expansion is very fine, and is therefore difficult to identify in the photograph. This photograph is from one of the most significantly affected portions of the B Electrical Tunnel.

Figure 2 - Photograph of Pattern Cracking at B Electrical Tunnel at Seabrook from October 2011

NextEra obtained concrete core samples from the B Electrical Tunnel and contracted SGH to perform petrographic examination of the cores, which confirmed the presence of ASR. Additionally, testing of cores confirmed reduction of material properties, which is also consistent with the presence of ASR.

NextEra then evaluated the potential for ASR elsewhere at Seabrook by obtaining concrete cores from a group of structures with ASR symptoms; cores were taken from multiple locations within each structure. Specifically, as part of the initial investigation, NextEra obtained cores from the B Electrical Tunnel of the Control Building, the Radiologically Controlled Area Walkway, the Residual Heat Removal and Containment Spray Vault, the Emergency Feedwater Pumphouse, the Diesel Generator Building, and the Containment Enclosure Building. These examinations are documented in a series of reports and summarized in MPR-3727. *See* MPR-3727, Rev. 1, "Seabrook Station: Impact of ASR on Concrete Structures and Attachments" § 3.1.1 (Jan. 2014) (FP100716, Rev. 4) ("MPR-3727") (NER018). In summary, SGH performed petrographic examination of samples from these concrete cores, which also confirmed the presence of ASR-related microcracking that can be attributed to the observed ASR gel.

NRC Information Notice 2011-20 provides the event summary that was transmitted to all U.S. nuclear plants regarding ASR at Seabrook. (NRC060).

Q77. Is there an industry standard for performing petrographic examinations?

A77. (JS, CB, OB, EC) Yes. Petrographic examinations for Seabrook were performed in accordance with ASTM C856, "Standard Practice for Petrographic Examination of Hardened Concrete." Petrographic examination involves microscopic examination of prepared concrete surfaces by a qualified petrographer. The examination assesses the overall quality of concrete, and can determine causes for concrete degradation. It can identify additional symptoms of

degradation that are not apparent without microscopic investigation. The ASTM C856 methodology was also used for evaluating core samples from the LSTP test specimens.

Q78. The petrographic examinations only investigated concrete in a few discrete locations. Did NextEra investigate ASR throughout all structures at Seabrook?

A78. (MC, JS, CB, EC) Yes. In June 2011, MPR engineers, with an experienced petrographer from Concrete Research and Testing, Inc., performed a site-wide inspection of all concrete buildings, which identified 131 areas with symptoms of ASR for additional investigation. MPR then performed a campaign of walkdowns in these areas to characterize the symptoms. Based on the previous petrographic examinations, expansion in all locations was conservatively attributed to ASR.

Q79. Please describe the general characteristics of the reinforced concrete structures at Seabrook.

A79. (MC, JS, CB, EC) The concrete mixture design used at Seabrook included coarse aggregate from a quarry in Maine, fine aggregate from a quarry in New Hampshire, and Type II Portland Cement from a cement plant in Maine. Also included were a water-reducing admixture and an air entrainment admixture. All of these constituent materials and the proportions used at the plant are consistent with the norms seen in the concrete industry. The nominal compressive strength of this concrete mixture design was 4,000 psi. *See* MPR-3757, Rev. 4, "Shear and Reinforcement Anchorage Test Specimen Technical Evaluation" § 1.3, tbl. 1-1 (May 2014) ("MPR-3757") (NER026).

For reinforcement configuration, all seismic Category I structures at Seabrook except for the walls of Containment and the lower portions of CEB use bi-directional reinforcement mats with reinforcing bars that run in two directions (i.e., within the plane of the wall) without transverse (i.e., through-thickness) reinforcing bars–as shown in Figure 3. *See* MPR-3757 § 1.3

(NER026). The walls of Containment and the lower portions of the CEB contain the bi-directional reinforcement mats and transverse reinforcement.

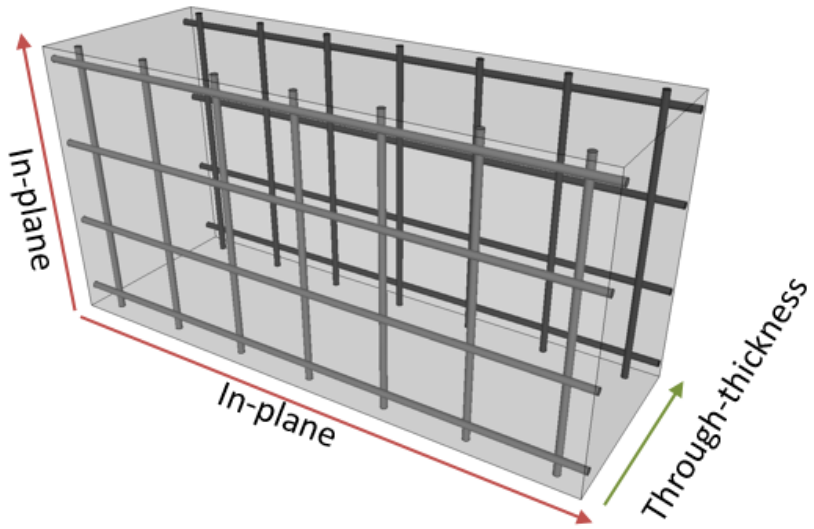

Figure 3 - Typical Reinforcing Pattern in Seismic Category I Structures at Seabrook

The reinforcement mats consist of vertical and horizontal reinforcing bars that are a few inches below the inside and outside surfaces of the structural members. As an example, a wall of a typical seismic Category I structure at Seabrook would include reinforcement mats on the interior surface and exterior surface, but would not include transverse reinforcing bars through the thickness of the wall. These reinforcement configurations are noteworthy in the context of ASR, because expansion will preferentially proceed in an unreinforced direction (as discussed in A70).

Q80. Were actions taken during original construction of the plant to prevent ASR?

A80. (MC, EC) Yes. The aggregate reactivity testing during original construction of Seabrook was performed in accordance with ASTM C289. *See* Seabrook Structures Monitoring Program Manual, Rev. 7 at 3-1.1 (NER007) ("SMPM"). As described in NRC Information Notice 2011-20 (NRC060), at the time of original construction of Seabrook, the recognized

industry standards for checking aggregate for reactivity were ASTM C227 and ASTM C289. However, more recent investigations by the concrete industry identified that both of these standards can incorrectly identify known reactive aggregates as non-reactive, if the aggregate is slow-reacting. Newer methods, ASTM C1260 and ASTM C1293, are now the accepted standards and provide more accurate results.

In addition, the mixture design for concrete at Seabrook used low-alkali cement, which reduces the likelihood of ASR.

The appearance of ASR symptoms decades after original construction and the very slow rate of ASR progression observed by monitoring at Seabrook support the conclusion that the coarse aggregate at Seabrook is in the category of slow-reacting aggregates that were not able to be identified by the standard industry tests from decades ago.

Q81. After ASR was identified, how did NextEra address the potential for structural implications?

A81. (MC) NextEra contracted industry experts from MPR and SGH to evaluate the condition of the concrete affected by ASR at Seabrook. As discussed above in A76, SGH performed the petrographic examinations and MPR performed the initial walkdowns to characterize the concrete condition throughout the plant. Thereafter, SGH performed routine examinations of the concrete condition (e.g., by crack width monitoring, which is described below in A129). MPR also performed an interim structural assessment of selected ASR-affected structures to evaluate their adequacy given the presence of ASR. This assessment is documented in technical report MPR-3727 (NER018), and served as the basis for the prompt operability evaluations performed by NextEra. Additional evaluations performed by NextEra were

appended to MPR-3727 in Seabrook Foreign Print ("FP") 100716.[3] Based on the low level of observed cracking and the apparent slow rate of change, the ASR-affected structures at Seabrook were determined to be suitable for continued service for at least an interim period (i.e., several years). *See* MPR-3727 at 6-17 (NER018). The NRC conducted a detailed review of the engineering analyses and evaluations in MPR-3727 and concluded that they were satisfactory, as described in an NRC Inspection Report from December 3, 2012 (NRC025) and the NRC letter dated October 9, 2013, closing the Confirmatory Action Letter ("CAL") for the ASR issue at Seabrook (NRC085) ("CAL Closeout Letter").

Q82. How was the interim structural assessment performed?

A82. (MC, JS, CB, OB) As presented in MPR-3727, the interim structural assessment leveraged the initial walkdown results from MPR-3704 (described above in A78) to select areas for detailed evaluation. *See* MPR-3727 § 2.1.2 (NER018).

Each evaluation reviewed the relevant design-basis calculations from the plant to assess the current structural margin, considering the worst-case effects of advanced ASR degradation (as documented in published technical literature of structural testing of ASR-affected concrete) and conservatisms in the ACI 318 Code as documented in code committee reports. *Id*. The worst-case ASR effects and the inherent conservatism in the ACI 318 Code were used to determine net "capacity reduction factors." These factors were used to conservatively calculate the residual capacity of ASR-affected concrete at Seabrook. Based on the results, all but a few of the locations were determined to be acceptable.

---

[3] FP100716 has been revised multiple times, as NextEra has deemed necessary, to add new evaluations to MPR-3727. FP100716, Rev. 1 (May 23, 2012), was reviewed by the NRC to close CAL. Exhibit NER018 is FP100716, Rev. 4, which includes additional supplements.

For the remaining locations, NextEra performed supplemental assessments to demonstrate adequate structural margin by considering conservatism in the demand (i.e., loads and load factors). All of these supplemental evaluations concluded that structures remained adequate for continued service. The evaluations were added to the Seabrook Foreign Print for MPR-3727 which is the compendium of structural evaluations preceding the LAR methodology. *See* MPR-3727, NextEra Supplements I-V (NER018).

Q83. Did the interim assessment determine a specific time period for which its conclusions would be valid?

A83. (MC, JS, CB, OB) No. Such a determination was not possible because there were insufficient data from the plant to quantify the rate of ASR expansion. However, a specific time limit was not necessary, provided that monitoring confirmed ASR expansion was slow. If any significant changes in expansion were observed, NextEra would have evaluated them and taken any necessary actions through the Corrective Action Program.

The timeline for the long-term assessment was expected to be several years based on the need to obtain data from a complex, multi-year, large-scale test program (i.e., the LSTP) and then perform comprehensive, design-basis structural evaluations for the various structures at the site. There was reasonable assurance that the conclusions of the interim assessment would remain valid during this time based on the low total expansion observed to date relative to the age of the plant, and the very small rate of change in expansion observed in the short time since ASR was identified.

As previously noted, the NRC agreed that this approach and the timeline were satisfactory, pending completion of the LSTP and additional structural assessments, as documented in the CAL Closeout Letter (NRC085) and the supporting inspection reports.

Q84. For the interim assessment, why did NextEra use the approach of leveraging structural test data to characterize the impact of ASR rather than simply recalculating structural performance using the Code expressions and the ASR-affected material properties from core testing?

A84. (MC, JS, CB, OB) ASR causes a reduction of concrete material properties. However, as discussed in A70, using the reduced material properties in the design expressions from the applicable codes for Seabrook (ACI 318-71 (NRC049) & ASME Code (NRC050)) does not consider the structural context of the confinement provided by reinforcement. Therefore, this approach does not accurately reflect structural performance of reinforced concrete affected by ASR. This fact is contained in numerous published studies and concrete industry guidelines (e.g., ISE Guideline § 5.3.1 (NER012) and CSA Guideline (NRC076)) and NRC correspondence of how NextEra was addressing ASR at Seabrook (e.g., Inspection Report dated December 3, 2012 (NRC025)). In Section C.2.4.1 of his testimony, Dr. Saouma also makes this point using shear strength as a specific example. *See* Saouma Testimony at 17 (INT001-R).

Q85. What were the recommendations of the interim assessment for subsequent steps?

A85. (JS, CB, OB) The interim assessment concluded that structures were acceptable for an interim period, but additional information was necessary for completing a long-term, design-basis assessment. MPR recognized that the studies on which the interim structural assessment were based used test specimens with suboptimal representativeness to structures at Seabrook, as follows.

- For shear, the test data used for the interim assessment were obtained from very small specimens (e.g., 3-inch × 5-inch in cross-section) and shear is known to scale poorly from laboratory-scale specimens to actual large structures, as discussed in Dr. Bayrak's report "Structural Implications of ASR; State of the Art" at 10 (Feb. 2, 2012) ("State of the Art") (NER019) and the reviewed testing literature (e.g., Chana and Korobokis, "Structural Performance of Reinforced Concrete Affected by Alkali Silica Reaction: Phase 1" § 7.2 1990). Further, in such small samples, it is not clear if a meaningful concrete mixture can be used,

because the least dimension of the test specimen is on the same order as maximum aggregate size (~1 in.).

- For reinforcement anchorage, the test data used for the interim assessment were obtained from a study that used a rebar pull-out test method that is considered "the *least* realistic" by ACI Technical Committee 408 in technical report ACI 408R-03, "Bond and Development of Straight Reinforcing Bars in Tension" ("ACI 408R-03") (NRC052) (emphasis added).

- For anchor and embedment capacity, the only available data were from the limited testing on an ASR-affected bridge girder that was performed at FSEL to support the interim structural assessment.

To support a long-term assessment of the impact of ASR on plant structures and provide a more realistic technical basis for a monitoring program, MPR-3727 (NER018) included a recommendation to perform large scale testing to obtain more representative data than were available in public literature.

Q86. Did NextEra concur with the recommendation in MPR-3727?

A86. (MC) Yes. Based on the substantial investment of time and resources required for the proposed large-scale testing, NextEra senior leadership and technical subject matter experts ("SMEs") conducted a detailed review regarding the need for the testing and the conceptual approach. In addition, NextEra used EPRI as an independent third party reviewer, and included EPRI as part of the review team. Based on a favorable review from EPRI, internal SMEs, and its senior leadership, NextEra concurred with the recommendation from MPR-3727 (NER018) and decided to pursue its own testing—the LSTP.

VI. OVERVIEW OF LICENSE AMENDMENT REQUEST

A. Proposed Methodology for Evaluation for ASR-Affected Structures

Q87. Why did NextEra need a License Amendment Request for Analysis of ASR-affected structures at Seabrook?

A87. (MC, JS, EC) The design basis codes identified in the UFSAR for Seabrook, ACI 318-71 (NRC049) and Section III of the ASME Code (1975 Edition) (NRC050), do not include provisions for the analysis of structures affected by ASR. Therefore, NextEra needed an LAR to incorporate a methodology into the plant's licensing basis that addresses the effects of ASR in the design of seismic Category I structures at Seabrook.

Q88. Please summarize the process for third-party review of the LSTP, the LAR and the subsequent review by the NRC, to the best of your understanding.

A88. (MC, EC) In addition to supporting the review discussed in A86, EPRI also provided a subsequent third-party technical review of the detailed plan for the LSTP. In addition, Dr. Bruce Ellingwood of Colorado State University also provided a third-party review of the LAR analytical methodology, including its use of the LSTP conclusions (*see* SGH Testimony at A60). Dr. Ellingwood is an internationally-recognized authority on structural load modeling and structural reliability theory, among other areas in the structural engineering community. Talisman International, LLC ("Talisman") provided an independent third-party review of the LAR. Talisman is a consulting company based out of Arlington, VA that provides services to nuclear plants supporting regulatory interactions.

The NRC monitored and assessed development and execution of the LSTP through a series of inspections, which included visits to FSEL prior to submittal of the LAR (discussed further in A98). After submittal, the LAR methodology was extensively reviewed by NRC Staff over a 22-month period. Personnel from Brookhaven National Laboratory supported the NRC review, focusing on the SEM.

The NRC Staff issued three letters (dated August 4, 2017; October 11, 2017; and May 1, 2018) that transmitted a total of 18 RAIs regarding the LAR (containing a total of 34 individual requests). NextEra responded to these letters in correspondence dated October 3, 2017 (NRC013); December 11, 2017 (NRC014); and June 7, 2018 (NRC015). In addition, the NRC conducted multiple audits to support their review of the LAR. The NRC published its Draft SE on September 28, 2018.

Finally, the ACRS, an independent technical body, reviewed the LAR. The ACRS meeting on ASR was on October 31, 2018 and the ACRS letter endorsing Seabrook's approach for addressing ASR was issued on December 14, 2018. (NRC048).

The Final SE for the LAR was issued on March 11, 2019. *See* Final SE (INT025).

Q89. Did the NRC review result in any substantive changes to the LAR?

A89. (MC, EC) Yes. Based on NRC review comments, several aspects of the LAR were revised. The main items that pertain to establishing representativeness of the LSTP results were the addition of a volumetric expansion criterion and incorporation of a license condition with two parts: (1) to perform periodic expansion assessments confirming that the observed expansion behavior at Seabrook is consistent with the LSTP specimens and (2) to perform a corroboration study at two different times through material property testing of cores from the plant to evaluate how expansion at the plant compares to the correlation determined from LSTP data at FSEL. Based on these changes and the extensive review performed by NRC Staff and Brookhaven National Laboratory, the NRC Staff concluded in their Final SE that "there is reasonable assurance that the activities authorized by this amendment can be conducted without endangering the health and safety of the public," and that "such activities will be conducted in compliance with the Commission's regulations." Final SE at 64 (INT025).

Q90. How do the LAR and the admitted contention fit with the overall approach for addressing ASR-affected structures at Seabrook?

A90. (MC, JS, CB, EC) The flowchart below provides an overview of the integrated approach that NextEra developed for addressing ASR in structures at Seabrook. The boxes depict key elements of the approach, and the arrows show the connections between the different elements of the approach (i.e., the flow of insights/conclusions/guidance). The upper part of the figure with the blue background contains the elements that relate to the effect of ASR on structural capacity. The lower part of the figure with the green background contains the elements that relate to the effect of ASR on structural demand. The efforts culminate in the SMP which monitors ASR expansion and structural deformation against established acceptance criteria.

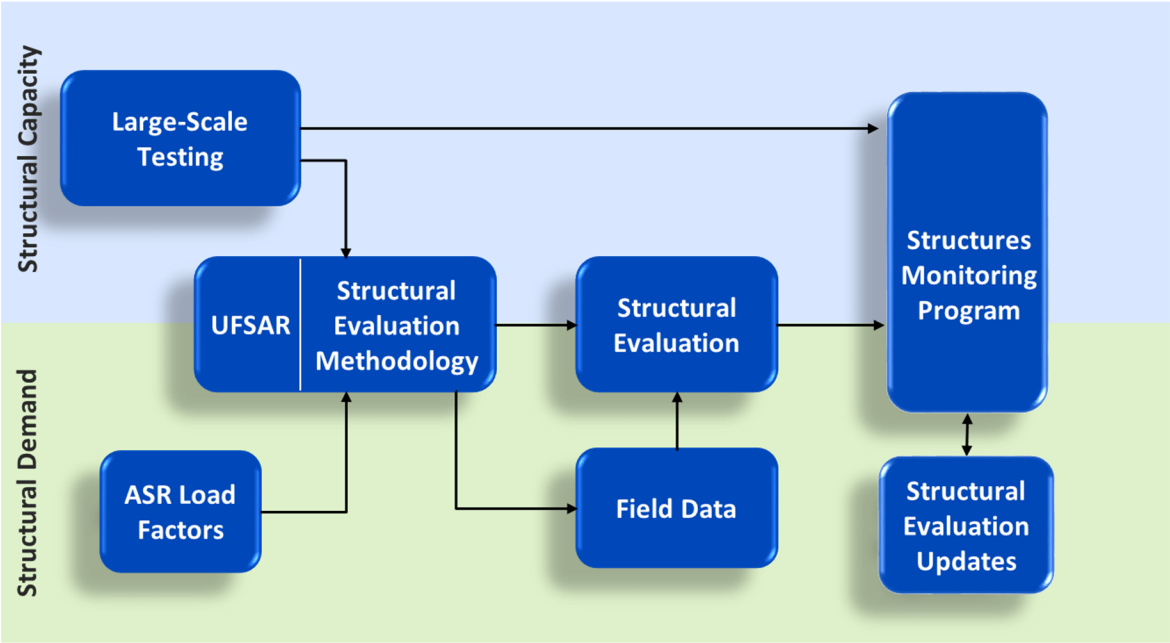

Figure 4 - LAR Methodology for Addressing ASR-Affected Structures at Seabrook

The list below steps through the different elements of the approach, starting with the LSTP, which is the focus of the admitted contention.

- LSTP: The LSTP evaluated the impact of ASR on structural capacity for key limit states (i.e., structural behavior modes) for reinforced concrete structures affected by ASR. In addition, the LSTP provided insights on expansion behavior in ASR-affected reinforced concrete elements. The conclusions of the LSTP are

an input to both the SMP and the SEM. The SMP leverages insights on monitoring methods and incorporates acceptance criteria from the LSTP. The SEM uses the conclusion from the testing that the shear capacity, flexural capacity and development length can be calculated using the provisions in the Code of Record and the minimum specified concrete strength, like it was in the original calculations.

- SEM: The SEM defines the approach for evaluating ASR-affected structures and the effects of deformation. It uses the load combinations and evaluation guidance in the UFSAR as amended by the LAR. It incorporates insights from the LSTP regarding the impact of ASR on structural modeling and capacity. It also includes load factors developed for the ASR-related loads; these load factors maintain the margin of safety inherent in the Codes of Record. The approach for the SEM is documented in the SEM Document (INT022).

- Structural Evaluation: A structural evaluation is performed for each ASR-affected seismic Category I structure, using the SEM defined in the LAR and the SEM Document (INT022). The evaluation uses field data to establish the current level of ASR expansion, and to benchmark the analysis with field-measured deformation and structural distress associated with the current ASR expansion. After the current condition is established, the analytical model is adjusted to increase the ASR loads to a level that remains less than the calculated capacity. Parameters to monitor and associated acceptance criteria are defined to ensure the structure remains bounded by the Code evaluation. It is important to note that the quantitative inputs for the structural evaluation are from measurements at the plant (i.e., field data); none of the quantitative inputs are from the load test data obtained during the LSTP.

- Structures Monitoring Program: The Structures Monitoring Program is a program that identifies and tracks the condition of plant structures. It includes monitoring the progression of ASR and building deformation due to ASR-induced loads. ASR expansion is monitored against the limits from the LSTP to ensure that the conclusions from the LSTP remain applicable to plant structures. Deformation of structures is monitored against acceptance criteria defined in the evaluation for a particular structure to ensure that the structural evaluation is bounding. Corrective action is taken if monitoring identifies that the acceptance criteria will be exceeded. Such corrective action could include a more detailed evaluation of the structure or potential modifications.

All of these elements integrate together to provide a comprehensive approach for addressing ASR in seismic Category I structures at Seabrook.

The admitted contention challenges the representativeness of the LSTP to Seabrook, and concludes that the proposed monitoring, acceptance criteria and monitoring intervals are not adequate because they use the LSTP as part of the technical basis.

Q91. How does the amended methodology use the conclusions from the LSTP?

A91. (MC, JS, CB, OB, EC) The LSTP concluded that structural capacities calculated using the Code expressions and the specified compressive strength remain appropriate. The design codes used for Seabrook seismic Category I structures include methodologies to calculate structural capacities for the various limit states and loading conditions. *See* LAR Evaluation § 3.2.3 (INT010)(NP), (NRC089)(P). MPR-4288 evaluated the impact of ASR on structural design evaluations, including the limit states investigated by the LSTP. MPR-4288 concluded that structural capacity adjustments are unnecessary when ASR expansion levels are below the limits observed in the test program. *See* MPR-4288 (INT012)(NP), (INT014)(P).

Provided the observed expansion is within the limits of the LSTP, the effects of ASR on Seabrook structures can be evaluated by incorporating the load associated with ASR concrete expansion and analyzing structures using the material properties specified in the original design with the expressions of the design code.

The LSTP showed a slight reduction in flexural stiffness at low loads (below 10% of capacity), but an increase in stiffness at higher loads. The increased stiffness was attributable to the ASR-induced prestressing effect. These observations inform the evaluations of the effects of ASR on Seabrook structures.

B. <u>UFSAR Markup</u>

Q92. Which portions of the UFSAR were amended as part of the LAR?

A92. (MC, EC) As described in the LAR Evaluation, the primary changes to the UFSAR are in Section 3.8, which includes the requirements for the design of Category I

structures at Seabrook. LAR Evaluation § 2.2 (INT010)(NP), (NRC089)(P). Section 3.8.1 applies to the Containment and Section 3.8.4 applies to other seismic Category I structures. The LAR amended portions of each of these subsections to incorporate the changes related to ASR effects and loads. Additional changes to other subsections of the UFSAR were necessary for limits on anchors in concrete walls and slabs affected by ASR and a change to allow the use of ANSYS software for modeling and structural analysis. Overall, amended sections of the UFSAR include sections 1.8, 3.7, 3.8.1, 3.8.3, 3.8.4, and 3.9.

C. License Condition

Q93. What is the license condition associated with the LAR?

A93. (MC, EC) The license condition associated with the LAR has two sets of actions, as documented in the Final SE: (1) perform periodic expansion assessments confirming that the observed expansion behavior at Seabrook is consistent with the LSTP specimens and (2) perform a corroboration study at two different times through material property testing of cores from the plant to evaluate how expansion at the plant compares to the correlation determined from LSTP data at FSEL. Final SE § 3.6 (INT025).

Q94. What activities are involved in the periodic expansion assessment?

A94. (JS, CB, EC) These assessments include a review of (1) margin for future expansion and the "rate" at which expansion trends are approaching the test limits, (2) expansion direction trends for consistency with the behavior of laboratory specimens (i.e., reorientation of expansion to primarily the through-thickness direction), and (3) a review of any cores for mid-plane cracking, which would be a departure from the fine, dispersed cracks exhibited by LSTP specimens away from the specimen edges. NextEra committed to perform an expansion assessment before 2025, and subsequent assessments will occur every ten years. Guidance for

the periodic expansion assessment is provided in Appendix B of MPR-4273 (INT019-R)(NP), (INT021)(P).

An initial assessment, including review of records from previous cores, was completed in 2018 with no adverse findings, although available trending data for through-thickness expansion were limited at that time. MPR 0326-0062-88, Rev. 2, "Initial Expansion Assessment of ASR-Affected Reinforced Concrete Structures at Seabrook Station" (Mar. 2018) ("MPR Initial Expansion Assessment") (NER020). Another assessment will be completed before 2025.

Q95. Please summarize the corroboration study and how it will be performed.

A95. (JS, CB, EC) The corroboration study focuses on a correlation developed during the LSTP that is used by NextEra to estimate through-thickness expansion at Seabrook before an extensometer is installed. The corroboration study is an approach for obtaining in-plant data to evaluate how expansion at the plant aligns with observed expansion of the LSTP specimens. The approach for the corroboration study is discussed further in A176. *See* MPR-4273 at vii, tbl. 1 & app. C (INT019-R)(NP), (INT021)(P).

NextEra committed to perform an initial corroboration study by 2025, and a follow-up corroboration study ten years thereafter.

Q96. Why were these actions included as a license condition rather than just being part of the SMP?

A96. (MC, EC) A licensee may make changes to its UFSAR without NRC approval under certain circumstances under 10 C.F.R. § 50.59. However, license conditions may not be changed without NRC approval and an opportunity for a hearing. In addition, the license condition includes a specific provision to notify the NRC each time an assessment or corroboration action is complete. Thus, use of this license condition establishes a formal and

documented protocol for communicating the results of the expansion assessments and the corroboration studies to the regulator.

VII. LARGE SCALE TEST PROGRAM

A. Overview of LSTP Approach

Q97. What was the purpose for performing the LSTP?

A97. (MC, JS, CB, OB, EC) NextEra performed the LSTP to provide test data for selected limit states on structural performance of test specimens that were more representative of concrete from Seabrook than data that were publicly available in the literature. To obtain these data, the LSTP included testing programs for: (1) one-way shear (i.e., beam shear), (2) reinforcement anchorage, and (3) anchor capacity. Conclusions from this testing were intended to (and now have been) used to support detailed structural calculations of ASR-affected structures at Seabrook.

In addition, during the course of the test programs, expansion in the plane of the accessible surface where reinforcing bars were present (i.e., the in-plane directions) plateaued, while expansion in the through-thickness direction continued (see A130). Thus, NextEra and MPR concluded that monitoring through-thickness expansion would be necessary for long-term aging management of reinforced concrete at Seabrook. However, a specific technique for through-thickness expansion monitoring that is practical for back-fitting into existing structures at a nuclear power plant was not identified in concrete industry guidance documents. Therefore, the LSTP also included a fourth program for evaluating and selecting instrumentation that could be used for monitoring through-thickness expansion at Seabrook.

The LSTP and discussion about the purpose, approach, and conclusions from each test program are summarized in technical report MPR-4273. *See* MPR-4273 (INT019-R)(NP), (INT021)(P).

Q98. Please describe the organizations involved in the LSTP and their roles.

A98. (MC, EC) The primary organizations involved in the LSTP were NextEra, MPR, and FSEL at the University of Texas at Austin.

The LSTP was funded by NextEra, who also provided oversight throughout the test program including visits to the test facility and routine interactions with MPR and the laboratory.

MPR was the prime contractor and led strategic development of the test program, evaluated the results, and performed commercial grade dedication ("CGD") to the requirements of 10 C.F.R. Part 50, Appendix B. MPR is a specialty engineering consulting firm with 55 years of experience supporting the commercial nuclear power industry. NextEra selected MPR because of MPR's experience solving challenging problems while addressing the associated technical issues, operability implications, and regulatory considerations. In particular, MPR has been involved in evaluations for other plants to address concrete aging mechanisms, including performance of laboratory testing and applications of the conclusions to concrete at the plants.

The LSTP was performed at FSEL at The University of Texas at Austin. FSEL was selected because of its long history of world-class research using large-scale test specimens, its experience with concrete and degradation by ASR, and its experience with fabrication of concrete test specimens that develop ASR in an accelerated manner. For the LSTP, FSEL personnel developed test program details, executed the test program, and prepared the test results.

As discussed in A86 and A88 NextEra also engaged EPRI to provide an independent technical review of the test program at the end of the planning phase, and prior to any specimen fabrication activities in September 2012. Comments from EPRI were incorporated into the plans for the LSTP.

NRC also reviewed the test plans, as documented in the CAL Closeout Letter (NRC085). Specifically, the NRC review included the test specifications for the LSTP, MPR document 0326-0058-157, "Overview of Anchor Testing Program in Concrete Affected by Alkali-Silica Reaction," dated February 26, 2013 ("Anchor Testing Overview") and MPR-3848, "Approach for Shear and Reinforcement Anchorage Testing of Concrete Affected by Alkali-Silica Reaction" § 2.2.2 (May 2013) ("MPR-3848") (NER015).

In addition, as stated in the Final SE, the NRC conducted several inspections of the LSTP including seven trips to FSEL to meet with NextEra and its contractors. These meetings included presentations on plans for the test program results to date and, eventually, analysis of the conclusions. In addition, NRC inspectors witnessed the full range of test activities, including fabrication of test specimens, anchor capacity testing, shear testing, reinforcement anchorage testing, and material property testing. NRC also visited Wiss, Jenney, Elstner, Associates, Inc. ("WJE") who performed petrography of cores obtained from the LSTP test specimens. These NRC activities are documented in Inspection Reports dated August 9, 2013 (NRC026); January 30, 2014 (NRC027); May 6, 2014 (NRC028); February 6, 2015 (NRC030); and February 12, 2016 (NRC032). NextEra, MPR, and FSEL incorporated NRC feedback from these inspections into plans for the LSTP and application of the conclusions.

Q99. Please provide a timeline for key activities in the LSTP.

A99. (JS, CB, OB) The LSTP included fabrication of specimens and performance of structural tests on these specimens, as detailed in the Proprietary Appendix, Table 1 (NER003).

The initial activity in the LSTP was anchor testing on a bridge girder that was used to support the interim structural assessment. The bridge girder was an existing large-scale test specimen that had been confirmed to exhibit ASR and could therefore be used for immediate testing in support of the interim structural assessment. This testing was performed in late 2011

and early 2012. Additional anchor testing on additional ASR-affected bridge girders available at FSEL was also performed in 2015. In addition, FSEL fabricated a total of [*see* Proprietary Appendix, Table 1 (NER003)] test specimens that were intended to better represent concrete members at Seabrook for anchor capacity testing than the bridge girders. These specimens were fabricated in 2012, ASR was allowed to proceed, and testing occurred at various ASR-induced expansion levels through 2015.

For the Shear and Reinforcement Anchorage Test Programs, FSEL fabricated a total of [*see* Proprietary Appendix, Table 1 (NER003)] specimens, starting in summer 2013 and continuing into 2014. Load tests for each program were performed on control specimens in 2014. For other specimens, ASR was allowed to develop and testing was performed on specimens representing a range of ASR-induced expansion levels until the end of 2015. (*See* A115 through A125 for further discussion on accelerating ASR).

For the Instrumentation Test Program, the specimen was fabricated in July 2014 and instrumentation was installed at a range of times thereafter. ASR developed throughout the course of the test program. FSEL periodically collected data from the instruments until the test program concluded in July 2015.

At the end of the LSTP, MPR prepared test reports to present the conclusions of the various testing efforts. In addition, MPR prepared CGD documentation throughout the course of the LSTP and issued reports to compile this documentation (CGD is discussed further in A100). Documentation of the LSTP was completed in 2016 and is provided in the reports shown in Table 1 below. The total page count of these reports is approximately 24,000 pages. To distill this information into a format that was more readily usable, MPR prepared MPR-4273 (INT019-

R)(NP), (INT021)(P) and MPR-4288 (INT012 (NP), INT014 (P)), which summarize the LSTP, its conclusions, and the implications for Seabrook.

Table 1. Summary of MPR Reports for LSTP

Test Program	Test Reports	CGD Reports
Anchor	MPR-3722	MPR-3726 MPR-4247 MPR-4286
Shear	MPR-4262 (Volumes I and II)	MPR-4259 MPR-4286
Reinforcement Anchorage		
Instrumentation	MPR-4231	

MPR personnel made a total of 119 trips to FSEL in support of the LSTP for planning, technical oversight, and quality oversight. The total MPR effort associated with LSTP activities was over 15,000 man-hours over a time period of 55 months.

Q100. What is meant by commercial grade dedication of the LSTP?

A100. (JS, CB) Products and services for safety-related applications at nuclear power plants require conformance to 10 C.F.R. Part 50, Appendix B, Quality Assurance Criteria for Nuclear Power Plants and Fuel Reprocessing Plants. MPR has a Nuclear Quality Assurance program that conforms to 10 C.F.R. Part 50, Appendix B, but many commercial entities do not. Commercial grade dedication ("CGD") is the process by which a product or service from a commercial vendor (i.e., a vendor without a 10 C.F.R. Part 50 Appendix B Quality Assurance Program) is accepted as equivalent to a product or service produced or performed under a 10 C.F.R. Part 50 Quality Assurance Program. Critical characteristics associated with the product or service are identified and verified to ensure the intended use is satisfactory with respect to nuclear safety.

For the LSTP, FSEL does not have a QA Program that satisfies the requirements of 10 C.F.R. Part 50, Appendix B, so MPR provided CGD services to dedicate the LSTP for safety-related applications at Seabrook. MPR prepared Commercial Grade Acceptance Plans (*see, e.g.*, A114) for each of the four test series, and then, among other activities, conducted a total of 56 inspections, 115 surveillances, and prepared a total of 276 special test and inspection reports to document conformance to critical characteristics. MPR also performed three commercial grade surveys for review of the FSEL Quality System Manual and implementation thereof.

B. Consideration of Representativeness at the Outset of the LSTP

Q101. Did NextEra, MPR, and FSEL consider representativeness during preparation for the LSTP?

A101. (MC, JS, CB, OB) Yes. Since the need for the LSTP derived from the lack of representativeness in the published literature data, ensuring that the test specimens were as representative as practical was a central aspect of planning the LSTP. The test programs were designed with the following key features to ensure representativeness:

- Large size to represent the scale of structures at Seabrook
- Experimental design that is accepted by the concrete industry in published Codes and consistent with the design basis of Seabrook
- Specimen design that uses a reinforcement configuration and concrete mixture design that reflects reinforced concrete structures at Seabrook
- Presence of ASR to an extent that is consistent with levels currently observed at Seabrook and at levels that could be observed in the future

See MPR-4273 § 2.4.2 (INT019-R)(NP), (INT021)(P).

Each of the four test programs within the LSTP were governed by a Test Specification that included provisions to ensure the objectives described above were achieved. The test specifications are included as appendices in the respective test reports:

- MPR-4231, Rev. 0, "Instrumentation for Measuring Expansion in Concrete Affected by Alkali-Silica Reaction" (Oct. 2015) (FP100972) ("MPR-4231") (NER021);

- MPR-4262, "Shear and Reinforcement Anchorage Testing of Concreted Affected by Alkali-Silica Reaction," Vol. I, Rev. 1 (July 2016) & Vol. II, Rev. 0 (Jan. 2016) (FP100994) ("MPR-4262") (NER022);

- MPR-3722, Rev. 2, "Strength Testing of Anchors in Concrete Affected by Alkali-Silica Reaction" (Jan. 2016) (FP100718, Rev. 1) ("MPR-3722") (NER023).

Critical characteristics of the test specimens and the test setup that were necessary to ensure the representativeness objectives described above were incorporated into a Commercial Grade Acceptance Plan and were explicitly evaluated throughout the LSTP as part of CGD activities (described above in A99 and A100, and below in A114).

1. Large Scale

Q102. Why is the large size important for establishing representativeness?

A102. (JS, CB, OB) The purpose of the LSTP was to provide data that represent the large, reinforced concrete structures at Seabrook. Hence, use of large-scale specimens was important to eliminate uncertainty on whether differences in size might affect the failure mode in question.

- As discussed in A85, shear is known to scale poorly with size. Large scale test specimens were therefore necessary to ensure that shear performance of structures at Seabrook was appropriately represented by the LSTP.

- Similarly, reinforcement anchorage behavior may be influenced by scaling effects. The test specimens used for the most conservative study on reinforcement anchorage identified in the "State of the Art" technical paper (NER019) used small specimens with reinforcing bar size that was much smaller in diameter than the reinforcing bar used at Seabrook.

In addition, ACI 318 design expressions, over the years, include variables that are influenced by the bar size. Thus, use of a reinforcing bar size that represents those bars used in reinforcing Seabrook structures was also viewed to be important for all limit states evaluated.

Dr. Saouma's comments in Section C.2.2.1 of his testimony regarding the importance of reinforcement dimensions agree with NextEra's approach for planning the LSTP from 2012. *See* Saouma Testimony § C.2.2.1 (INT001-R).

Q103. What were the sizes of the test specimens used for the LSTP?

A103. (JS, CB, OB) The Proprietary Appendix, Table 4 (NER003) summarizes the dimensions of specimens for each test program. In particular, note that the thicknesses of the test specimens are closely matched to the B Electrical Tunnel (Note 1 of Proprietary Appendix, Table 4 (NER003)).

Q104. How does the size of the LSTP specimens compare to other research?

A104. (JS, CB, OB) Presently, there are two government-sponsored test programs being performed in the United States by (1) ORNL for the DOE's Light Water Reactor Sustainability ("LWRS") project, and (2) NIST for the NRC. The LSTP specimens were larger than the specimens used by these test programs. The ORNL study includes three test specimens that are 3 m × 3.5 m × 1 m (9'-8" × 11'-4" × 3'-4"). *See* N. Ezell et al., "Experimental Collaboration for Thick Concrete Structures with Alkali-Silica Reaction," fig. 1 (2018) ("Ezell 2018") (NER047). The NIST study has a range of sizes for the varying tasks within the program, and the largest specimen is 10 ft × 6 ft × 4 ft. *See* L. Phan, "Structural Performance of NPP Concrete Structures Affected by Alkali-Silica Reaction (ASR)," Slides for NRC Regulatory Information Conference Session TH27 at slide 6 (2018) ("Phan 2018") (NER048).

Q105. Why did NextEra choose to fabricate large-scale test specimens rather than use to-scale specimens obtained directly from the plant or from the abandoned Unit 2?

A105. (MC, JS, CB, OB, EC) In 2012, NextEra and MPR considered the approach of harvesting test specimens from Seabrook, Unit 1 or the abandoned Unit 2 as part of planning the

LSTP. After deliberate consideration, this idea was ultimately rejected. Key considerations are summarized in Table 2 below (taken from MPR-4273 tbl. 2-1) (INT019-R)(NP), (INT021)(P).

Table 2. Comparison of Test Specimen Approaches

Harvested Specimens	Fabricated Specimens
Advantages • ASR developed along a timescale that represents an actual structure • Does not require capability to fabricate specimens and store specimens while ASR is developing Disadvantages • The harvesting process may damage the test specimens and affect results • Range of testing is limited by currently-exhibited ASR levels	Advantages • Allows precise control of test variables, which permits separate effects testing where there is only one variable (e.g., ASR level) • Enables aging beyond currently-exhibited ASR levels • Common basis for ACI Code provisions Disadvantages • ASR development is much faster than for actual structures

In summary, a key factor for selecting fabricated specimens was to maximize control of test variables and therefore improve representativeness. Using fabricated test specimens avoids the process of cutting out a section of reinforced concrete and transporting it to the laboratory, which results in damage that affects the test results. Specifically, the newly cut concrete surfaces would be subject to rapid expansion due to stress relaxation in the absence of the structural context. Additionally, cutting of rebar precludes its full development under loading, which also reduces representativeness. Design features of the fabricated test specimens (e.g., rebar terminators, presence of stirrups at specimen ends) restore a portion of the continuity that represents the original structure, thereby making the test results more representative of true structural performance. (Proprietary Appendix, Figures 1 & 2 (NER003) illustrate rebar terminators and stirrups at the specimen ends). *See* MPR-4273 § 2.4.1 (INT019-R)(NP), (INT021)(P).

Furthermore, samples from Seabrook would only be able to represent ASR-affected concrete to currently observed expansion levels. Accelerated aging was an essential element of the LSTP, because the results needed to address ASR-induced expansion that could occur in the future.

2. Experimental Design

Q106. In general, why are the experimental design and test setup important for establishing representativeness?

A106. (JS, CB, OB) Structural testing for a particular limit state must be designed to ensure that the test specimens fail in the limit state being investigated and proceed to failure in a manner that is representative of the structure(s) to which the results will be applied. Dr. Saouma's comments in Section C.2.3.1 of his testimony regarding the importance of ensuring that the load test produced the desired type of failure agrees with NextEra's approach for planning the LSTP from 2012. *See* Souma Testimony § C.2.3.1 (INT001-R).

NextEra and MPR specified that the experimental design and test setup for the LSTP should be comparable to the methods used to support development of design expressions and other provisions in industry-accepted codes. This approach was essential, as it allowed NextEra to retain the link to the existing design basis codes and standards, which are based on the expertise of multiple generations of industry authorities (e.g., Code committees) and successful implementation in existing structures. In addition, this approach has specific importance for the LSTP because the SEM in the LAR continues to rely on the original licensing bases (e.g., the Codes of Record). Therefore, the LSTP was specifically designed to obtain data using experimental designs and test setups that were representative of the methods used to develop the original licensing bases.

It was essential that the specimens from the LSTP represent what was previously tested by many research groups around the world to obtain data for the shear design expressions in ACI 318-71 (NRC049). Beam-shear expressions are used in designing many structural elements, in compliance with ACI 318-71 (NRC049). The design basis calculations for Seabrook use "beam-shear" expressions in the design of seismic Category I buildings. Representing the boundary conditions of a particular location in a particular building does not properly inform a comprehensive engineering evaluation for all applicable locations and would necessitate a much larger and unreasonable scope for the LSTP. On the other hand, representing previous test specimens that were employed in the development of the ACI 318 code provisions allows for a comprehensive, methodical approach that can be conservatively and practically applied to all structures. Further discussion on use of the original design codes is provided in A91.

Q107. Are the test setups for the Shear and Reinforcement Anchorage Test Programs different than the loading conditions at Seabrook?

A107. (JS, CB, OB) Yes. As detailed in A139 and A147, the test setups for the Shear and Reinforcement Anchorage Test Programs used a point loading arrangement. This loading is different than the conditions for some structures at Seabrook, which have uniform loading due to hydrostatic loading from the exterior of the structure, the weight of the structure, and the global application of potential loads (e.g., seismic). The test setups were not aimed at replicating boundary conditions (i.e., load or deformation compatibility) at Seabrook. Rather, the test setups were adopted since they are industry standard tests for studying shear behavior and reinforcement anchorage. *See* MPR-3848 § 4.3 (NER015).

Q108. Why is it acceptable to apply conclusions from testing that does not reflect the exact loading conditions at the plant?

A108. (JS, CB, OB) Replication of the in-situ conditions would have been excessively complex and is ultimately unnecessary for reasonable assurance. Considering the variety of

loading and boundary conditions present at Seabrook, it is not practical or even possible to replicate every location. Similarly, ACI 318-71 expressions do not aim to replicate the boundary conditions for the myriad structures in which the design expressions are used. Instead, ACI 318-71 presents design expressions that can uniformly be applied to concrete structures. *See* MPR-3848 § 4.3 (NER015).

Like ACI 318-71, the LSTP used the most severe loading and boundary conditions for the limit states of interest and were consistent with the approaches used to develop the ACI Code expressions of interest, which provide the design basis for the plant. As a result, the specimens and the test setups have been designed so that failure during the test will occur in a target region by the desired failure mode. This approach produced results that satisfy the objectives of the LSTP.

3. Reinforcement Configuration

Q109. Why is the reinforcement configuration important for establishing representativeness?

A109. (JS, CB, OB) As discussed in A68, reinforcing bars provide confinement to the concrete and therefore resist ASR-induced expansion of concrete in the directions where reinforcing bars are present. When ASR expansion occurs, the presence of reinforcing bars causes "chemical prestressing" that affects structural performance (discussed further in A68 and A69). Accordingly, it was essential to use test specimens with a reinforcement configuration that was representative of structures at Seabrook. For the LSTP, a key aspect for representative reinforcement configuration was the direction of reinforcement. Discussion in Dr. Saouma's testimony on the importance of representing reinforcement dimensions (Section C.2.2.1) and the prestressing effect (Section C.2.4.1) agrees with NextEra's approach. *See* Saouma Testimony §§ C.2.2.1 & C.2.4.1 (INT001-R).

Q110. Please describe the key aspects of the reinforcement configuration of the fabricated test specimens for the LSTP and how they compare to reinforced concrete at Seabrook.

A110. (JS, CB, OB) The test specimens that were designed and fabricated for the LSTP incorporated several key characteristics pertaining to reinforcement configuration that provide strong representativeness to Seabrook, as follows:

- Reinforcement configuration where reinforcing bars are provided within the plane of a structural element (i.e., in two directions as shown in Figure 3 from A79). This configuration is consistent with all structures at the plant, except the walls of Containment and the lower portions of the CEB, which also contain reinforcing bars in the through-thickness direction.

- Reinforcing bar characteristics reflected the reinforcing bars in the plant with respect to diameter, material properties (i.e., yield strength, tensile strength, and elongation) and type (i.e., deformed with ribs instead of smooth). (Discussed further in A114); *see also* MPR-3757 tbl. 3-1 (NER026).

- Concrete cover above reinforcement mats (i.e., distance from the outside diameter of the embedded reinforcing bar to the concrete surface) was consistent with the plant. (*See* Proprietary Appendix, Table 5 (NER003)).

- Specific features of the specimen design were used to mimic the continuity of the reinforcement mats in a larger structure (see Proprietary Appendix, Figures 1 & 2 (NER003)). Because the specimens were beams, the height direction was relatively small compared to the plant (*See* Proprietary Appendix, Table 4(NER003)).

See MPR-4273 § 3.1.1 (INT019-R)(NP), (INT021)(P).

Q111. How do the reinforcement dimensions of the fabricated test specimens compare to Seabrook?

A111. (JS, CB, OB) A summary of the reinforcement configuration dimensions of the various test specimens is described in the Proprietary Appendix, Table 5 (NER003). As an example, Proprietary Appendix, Figures 1 and 2 (NER003), illustrate the reinforcement configuration of the reinforcement anchorage specimens.

The B Electrical Tunnel was used as the reference location for Seabrook because it was the location where ASR was first identified and it is representative of other structures at the plant

(with the exception of the walls of Containment and the lower portions of the CEB, which are triaxially reinforced). The B Electrical Tunnel uses vertical reinforcing bars that are the same size and spacing as all of the test specimens. *See* MPR-3757 tbl. 3-1 (NER026). The B Electrical Tunnel uses horizontal reinforcing bars that are of similar size and spacing to the various specimens (see Note 3 of Proprietary Appendix, Table 5 (NER003)). For the shear specimens, the differences in reinforcement in the horizontal direction precluded failure of the test specimen via flexure at loads less than the expected shear capacity. *See* MPR-4273 § 3.1.2 (INT019-R)(NP), (INT021)(P). In this context, and in compliance with ACI 318-71, shear failure is defined as the formation of the first diagonal crack. *See* ACI 318-71 cmts. for §§ 11.2 and 22.5.1.1 (NRC049).

The anchor, shear, and reinforcement anchorage test specimens included transverse reinforcing bars (i.e., stirrups) outside of the test region to ensure that the test specimen failed in the test region by the desired failure mode. Although the stirrups did provide confinement in the through-thickness direction for the portion of the beam where they were located, this transverse reinforcement was not present within the test area where the specimen failure occurred. *See* MPR-4273 § 3.1.2 (INT019-R)(NP), (INT021)(P).

Q112. Did the use of slightly different specimen designs provide any benefits to applicability at Seabrook?

A112. (JS, CB, OB). Yes. An additional benefit of using test specimens with slightly different reinforcement ratios and stirrup configurations is that MPR and FSEL were able to investigate whether these differences had an effect on expansion behavior. *Id.* § 4.5. The test results showed a consistent relationship between material properties and expansion for the various beam designs, which suggests that the specific boundary conditions of a particular specimen design did not affect the ASR aging mechanism. Use of transverse reinforcing bars

outside of the test regions in some test specimens and use of no transverse reinforcing bars in the instrumentation specimen did not result in a discernable difference in the measured material properties of the cores extracted from the test regions of the specimens for a variety of through thickness expansion levels. This observation supports generic applicability of the test conclusions among seismic Category I structures, which also have minor differences in configuration.

Q113. How does the reinforcement of the bridge girder sections compare to the reference location at Seabrook?

A113. (JS, CB, OB) Reinforcement of the bridge girder specimens is described in Note 4 of Proprietary Appendix, Table 5 (NER003). *See also id.* § 3.2. While the reinforcement configuration (and also the concrete mixture design) does not match Seabrook as closely as the fabricated specimens, these girder specimens are reinforced in the in-plane directions, were the best available option to promptly obtain data for the interim structural assessment, and allowed anchor testing on specimens with higher levels of in-plane ASR expansion. Relative to the fabricated specimens, the lighter reinforcement in the girders contributed to the presence of greater levels of in-plane ASR expansion.

Q114. Were any other characteristics of the reinforcing bars evaluated for representativeness?

A114. (JS, CB, OB) Yes. MPR prepared a technical evaluation of the test specimens for the shear and reinforcement anchorage test specimens. *See* MPR-3757 (NER026). This report provided a detailed review of how relevant attributes of the reinforcing bars used for the test specimens compare to the reference location from the plant (i.e., the B Electrical Tunnel). Characteristics evaluated pertaining to reinforcing bars included reinforcement type (deformed

vs. smooth),[4] size, spacing, cover (i.e., distance from reinforcement to the concrete surface), material properties (i.e., yield strength, tensile strength, elongation), anchorage, lap splice length, and absence of transverse reinforcing bars. *Id.* at 1-3 to 1-4, tbl. 1-1. In summary, MPR-3757 provides a feature-by-feature technical justification for representativeness of the shear and reinforcement anchorage test specimens. The conclusions from MPR-3757 also apply for the instrumentation test specimen. The critical characteristics identified in MPR-3757 were included in the commercial grade acceptance plan for the test program, which is in Appendix B of MPR-4259, "Commercial Grade Dedication Report of Seabrook ASR Shear, Reinforcement Anchorage and Instrumentation Testing" (Jan. 2016) ("MPR-4259") (NER025). Over the course of the test programs, MPR verified that all parameters met the acceptance criteria, which supported the ultimate conclusion that the test specimens were satisfactorily representative.

For the Anchor Test Program, MPR-3722 provides a summary of the evaluation on representativeness. *See* MPR-3722 § 2.1.2 (NER023). Critical characteristics for reinforcing bar size, spacing, cover, etc., are provided in a commercial grade acceptance plan included in Appendix B of MPR-4247, Rev. 0, "Commercial Grade Dedication Report for Seabrook ASR Anchor Testing (Block Series and Girder Series Phase 2)" (Dec. 2015) ("MPR-4247") (NER024). Over the course of the anchor test program, MPR verified that all parameters met the acceptance criteria, which supported the ultimate conclusion that the test specimens were satisfactorily representative.

---

[4] Deformed reinforcing bars have ribs around the circumference to promote better engagement with the concrete by mechanical interlock.

4. Concrete Mixture Design and ASR Levels

Q115. Please describe the key aspects of the concrete mixture design for the fabricated specimens and how they compare to concrete at Seabrook.

A115. (JS, CB, OB) The test specimens that were designed and fabricated for the LSTP incorporated several key characteristics pertaining to concrete mixture design that establish representativeness to Seabrook. In fact, the original construction specifications for reinforced concrete at Seabrook were used as an input for the LSTP, as described in MPR-3757. Aspects of the LSTP concrete mixture design that promote representativeness are as follows:

- Compressive strength[5] was in the "normal strength" range of 3,000 psi to 7,000 psi after 28 days. The 28-day compressive strength of the reference location (i.e., the B Electrical Tunnel) was approximately 5,500 psi. *See* MPR-3757 tbl. 3-1 (NER026).

- To the extent practical, concrete constituents were obtained from sources that were consistent with the concrete at Seabrook. As an example, a portion of the coarse aggregate used for the shear and reinforcement anchorage test specimens was transported by trucks to FSEL (Texas) from a quarry in Maine that is near to the quarry where aggregate was obtained for original construction at Seabrook. (Discussed further in A119)

- The nominal coarse aggregate size was specified not to exceed ¾-inch. Research has shown that maximum aggregate size impacts specimen shear strength. Use of aggregate that is equal or smaller in size than the reference location is therefore conservative and acceptable. *See* MPR-3757 at 3-9 (NER026).

- The coarse aggregate was crushed stone (rather than rounded river gravel), which promotes aggregate interlock. It was important for this feature of the Seabrook concrete to be appropriately represented because it is important to strength of the concrete. Aggregate interlock refers to the rough surface of each aggregate and the inability of aggregates to slide past one another.

See MPR-4273 § 3.1.1 (INT019-R)(NP), (INT021)(P).

The concrete mixture design for the LSTP also included differences from Seabrook to allow accelerated development of ASR. The objective of the test program was to provide

[5] Other material properties, such as elastic modulus, are not documented from original construction of Seabrook Station. Elastic modulus can be estimated using a correlation with compressive strength.

information on structural performance of ASR-affected specimens that were representative of Seabrook now and into the future. Use of a concrete mixture design identical to the plant would not have produced sufficient ASR progression to reach or exceed the condition of the plant in an acceptable timeframe. Hence, the concrete mixture design included highly reactive fine aggregate and a chemical admixture to accelerate development of ASR. The shear, reinforcement anchorage, and instrumentation specimens also included reactive coarse aggregate (which was mixed with the aggregate from Maine at a proportion of slightly below 50%) and cement with high alkali content. In this manner, test specimens could reach levels of ASR beyond that observed at Seabrook after only a short time of conditioning (i.e., maximum of 2.5 years during the LSTP). *See* MPR-4273 § 3.1.1 (INT019-R)(NP), (INT021)(P).

Q116. Why is it sufficiently representative to use a concrete mixture design with more reactivity than the concrete mixture design at Seabrook?

A116. (JS, CB, OB) Reactivity of the test specimens drives rate of ASR progression and the consequent expansion. The strategy for the LSTP was to relate structural performance to observed expansion by performing structural testing when expansion reached certain levels. Because each test was a snapshot of structural performance at a given expansion level, the rate of ASR progression and the rate of expansion of the specimens was not relevant. In fact, as discussed in A115 above, the test specimens were deliberately non-representative in terms of reaction rate, so that the ASR progression of the test specimens would exceed Seabrook within the timeframe of the test program. Thus, the reaction rate observed in the LSTP intentionally does not correlate to the plant. Furthermore, given the variation of ASR development throughout Seabrook and the fact that ASR does not progress at a constant rate even in the same structure (e.g., due to differences in temperature, presence of water, etc.), it would not be feasible to

simply apply the observed expansion rate from a test program to project the rate of ASR development at the plant in a representative manner.

The critical characteristics for the concrete mixture design to establish representativeness to the plant are compressive strength, cement type, constituent proportions (e.g., ratio of water to cement), coarse aggregate size, coarse aggregate surface roughness, and ratio of coarse aggregate to fine aggregate. *See* MPR-4259, app. B (NER025). None of these characteristics were compromised by the measures taken to increase the rate of ASR progression of the concrete. Material property testing and petrographic examination of concrete from the test specimens did not identify any impact to curing of the concrete resulting from the use of a chemical admixture.

Q117. Will the differences in concrete mixture design produce ASR that has a different chemical structure than is present at Seabrook?

A117. (JS, CB, OB) Yes. Published literature studying the material properties of ASR has identified a range of "types" of ASR. As described in the ISE Guideline, "The characteristics of the alkali-silica gel formed by the reaction vary with its chemical composition, temperature, moisture content and pressure. Its consistency can range from that of heavy engine oil to that of polyethylene." ISE Guideline § 3.3 (NER012).

Q118. Does the presence of a different "type" of ASR have an effect on applicability of the test conclusions?

A118. (JS, CB, OB) No. The ASR gel is relevant because it can cause expansion and cracking, but it is the cracking that may ultimately produce structural consequences. Accordingly, expansion was selected as the correlating parameter between the LSTP and Seabrook for interpreting and applying test results.

The LSTP focused on structural performance rather than the specific chemical interactions. The different types of ASR may cause different levels of expansion; however, for a given level of ASR-induced expansion, similar levels of structural impacts are to be expected,

regardless of the chemical composition of the ASR gel causing the expansion. Industry guidelines and published research on the structural impacts of ASR do not point to differentiation based on differences in the chemical composition of ASR gel. As such, concrete industry guidance documents for addressing ASR also do not differentiate based on "type" of ASR.

Additionally, published technical reports on structural testing of ASR-affected concrete typically relate structural performance to expansion level, rather than a particular chemical constituent of the ASR gel.

Q119. Did the LSTP use coarse aggregate that was different than Seabrook?

A119. (JS, CB, OB) Yes. The quarry from which the original aggregate for Seabrook was obtained is now shut down. Even if it were still open, the rock strata (i.e., layer) from which the original aggregate was obtained would not be available. In addition, as noted in A115, use of more reactive coarse aggregate accelerated ASR development.

Q120. Why is it acceptable to use a coarse aggregate source that is different from the aggregate source used at Seabrook?

A120. (JS, CB, OB) The critical characteristics that pertain specifically to the coarse aggregate are size and surface roughness. Compressive strength and constituent material ratios are other critical characteristics that depend on coarse aggregate but also other parameters. All of these parameters were satisfied using the aggregate obtained from the sources used for the test program.

The coarse aggregate used for the LSTP specimens, including the portion trucked to Texas from Maine, does not have exactly the same amount of reactive silica as the aggregate that is at Seabrook. However, because the ASR reaction rate is not a parameter of interest for the LSTP, the amount of reactive silica in the aggregate is not a critical characteristic.

It is important to recognize that ACI 318-71 provisions employed in designing Seabrook structures contain design provisions that apply for a broad range of coarse aggregates. For example, the shear strength expressions of ACI 318-71 that are part of the original Seabrook licensing basis did not exclusively reflect test data from specimens that contain aggregates from Maine. The conservative approaches taken by code committees in assembling databases, evaluating test data, etc., make accommodation for variability in local constituent materials. It is not practical that design expressions are specific to all local constituent materials.

Q121. Why is it acceptable to use a fine aggregate source that is different from the aggregate source used at Seabrook?

A121. (JS, CB, OB) The critical characteristics that pertain to the fine aggregate are compressive strength and ratio of coarse aggregate to fine aggregate. Both of these parameters were satisfied using the fine aggregate obtained from the sources used for the test program. Consistent with the discussion for coarse aggregates in A120, the ACI 318-71 expressions are intended to apply to a broad range of fine aggregates.

The fine aggregate used for the fabricated test specimens was obtained from Texas and was used because of its very high reactivity. As discussed in A116, the rate of reaction was not a parameter of interest for the LSTP, so the significant difference in reactivity as compared to the fine aggregate at Seabrook is not relevant.

Q122. Is the approach to have minor differences between the concrete mixture designs of the LSTP specimens and concrete at Seabrook consistent with typical industry practice?

A122. (JS, CB, OB) Yes. In terms of general approach, the concrete industry routinely uses experimental data from a laboratory environment as a technical basis for Code provisions or other judgments on acceptability of other concrete. In most cases, the laboratory testing is not performed with an existing, specific concrete structure in mind. Thus, when the engineer

attempts to apply the experimental data to evaluation of an actual structure, there are always differences between the test specimens and the existing structure. Furthermore, ACI Code expressions are based on laboratory test data from many test programs that have wide variation among the constituents, configurations, and material properties of test specimens. *See* Reineck 2010 and Reineck 2013; *see also* A63. These data are treated together, even though these differences exist.

With regard to use of the LSTP for Seabrook, the test specimens were designed and fabricated to maximize representativeness to the plant to the extent practical. Hence, the level of representativeness for the LSTP is better than the level of representativeness that is typically judged to be acceptable for applying test data for an actual structure. Furthermore, the design basis for Seabrook, ACI 318-71 (NRC049), is based on laboratory test data and experience with concrete structures that are much less representative of buildings at the plant than the LSTP. Accordingly, the test specimens of the LSTP are more representative of Seabrook than is typical for application of ACI 318-71 over the decades of its implementation at Seabrook, other nuclear power plants, and other structures in general.

Q123. Did the LSTP use any other strategies to accelerate ASR expansion?

A123. (JS, CB, OB) Yes. Test specimens were stored in an Environmental Conditioning Facility ("ECF") (akin to a greenhouse) with elevated temperature and alternating wet and dry cycles to promote ASR development. To simulate the potential presence of groundwater on one side of the reinforcement concrete at Seabrook (e.g., for underground exterior walls), FSEL placed wet, absorbent fabric on the top side of each shear and reinforcement anchorage test specimen. Misters in the ECF maintained a humid environment during wet cycles. This approach was used throughout the conditioning period, which spanned a

total of approximately 2.5 years for the specimens with the greatest ASR progression. *See* MPR-4273 § 4.2.6 (INT019-R)(NP), (INT021)(P).

Q124. Why is environmental conditioning an acceptable method for accelerating ASR development?

A124. (JS, CB, OB) The specific environmental conditions were not essential to the testing, because they only affect the rate of ASR development. As previously discussed, the test results depend on the observed expansion at the time of load testing. The rate of ASR progression to reach the observed expansion was not an essential parameter. The elevated temperature and humidity in the ECF are comparable to high temperature and humidity conditions observed at the plant. Based on observations of the walls at Seabrook, there is water seepage through the exterior walls in various locations where ASR is observed. Thus, applying water to the specimens is representative of these areas of plant. *See* MPR-3757 at 3-15 (NER026).

Q125. How do the methods used in the LSTP for accelerating ASR compare to other test programs?

A125. (JS, CB, OB) Use of known reactive aggregate, high alkali cement, chemical admixtures, and environmental conditioning are commonly employed for ASR-related research in the academic and research communities. Consistent with the need for timely LSTP results, other research and test programs have time limitations and typically require some acceleration of ASR development to obtain results in a reasonable timeframe. As an example, in the 1990 study by Chana and Korobokis, "Structural Performance of Reinforced Concrete Affected by Alkali Silica Reaction: Phase I," the researchers used high-alkali cement and chemical additives such as metal hydroxides, just like the LSTP specimens. Dr. Saouma cites this paper in Section E of his testimony (INT001-R). Additionally, industry guidelines on addressing ASR are largely based on data obtained from laboratory testing of concrete with accelerated ASR development.

Reputable laboratories continue to use this approach today, as evidenced by the ongoing NRC research on ASR being conducted at NIST (*see* Phan 2018 (NER048)) and ongoing DOE research at ORNL (*see* Ezell 2018 (NER047)), both of which are accelerating ASR development. The ORNL test specimens used a reactive concrete mixture design that used reactive coarse aggregate and sodium hydroxide to accelerate ASR development. In addition, the ORNL test specimens were stored in an environmental chamber that maintained conditions at 100°F and 95% relative humidity. The NIST testing being sponsored by the NRC is also using a deliberately reactive concrete mixture design and an environmental chamber to accelerate ASR development. A stated objective of the NIST testing is to "develop a technical basis for regulatory guidance to evaluate ASR-affected NPP through service life." Both of these test programs are intended to produce results that are representative of reinforced concrete at nuclear power plants. Similar to the LSTP, the objectives of these test programs do not rely on duplicating the rate of ASR development or having the same constituents in ASR gel as could appear in any particular plant.

In addition, we note that Dr. Saouma's recent research performed for the NRC also used accelerated aging of ASR, as documented in his report, "Experimental and Numerical Investigation of Alkali Silica Reaction in Nuclear Reactors" (Dec. 2017) ("Saouma 2017") (INT005). In particular, with regard to the specimens, Dr. Saouma states that "…to enhance the reaction, cement with a high natural alkalinity was selected and then the alkalinity was further raised by adding sodium hydroxide." *Id.* at 6. In addition, environmental conditioning of the specimens was used for accelerated aging by storage in a fog room at 95°F and approximately 90% relative humidity. *See id.* at 7.

Based on the points of comparison identified above, the approach used for accelerating ASR for the LSTP is consistent with best practices from the research community.

C. Monitoring ASR Expansion

Q126. How did the LSTP characterize ASR development among the test specimens?

A126. (JS, CB, OB) Multiple methods were used to characterize ASR development of the test specimens in the LSTP including expansion monitoring by physical measurements of the specimens (e.g., crack width summation, embedded rods), material property testing of cores removed from the specimens and petrographic examinations of cores removed from the test specimens. *See* MPR-4273 § 4.1 (INT019-R)(NP), (INT021)(P). Use of multiple methods for monitoring ASR development was essential for establishing satisfactory representativeness to Seabrook.

Identifying an appropriate parameter for correlating the test results to Seabrook was necessary to apply the conclusions from the LSTP to plant structures. Expansion monitoring is the approach advocated by industry guidance (*see* A128), and is the parameter of interest for the aging effect in question. *See* MPR-3848 § 2.2.2 (NER015). Furthermore, expansion monitoring is a practical solution for implementation in a nuclear power plant.

Q127. Please elaborate on the crack-width summation methodology.

A127. (JS, CB, OB) In-plane expansion was determined by a crack width summation technique known as crack indexing, which is a process for determining expansion on a concrete surface using measurements of crack widths along a pre-determined length or grid. *See* MPR-4262 § 5.1.1 (NER022). Figure 5 below is a diagram of a reference grid that was used during the LSTP.

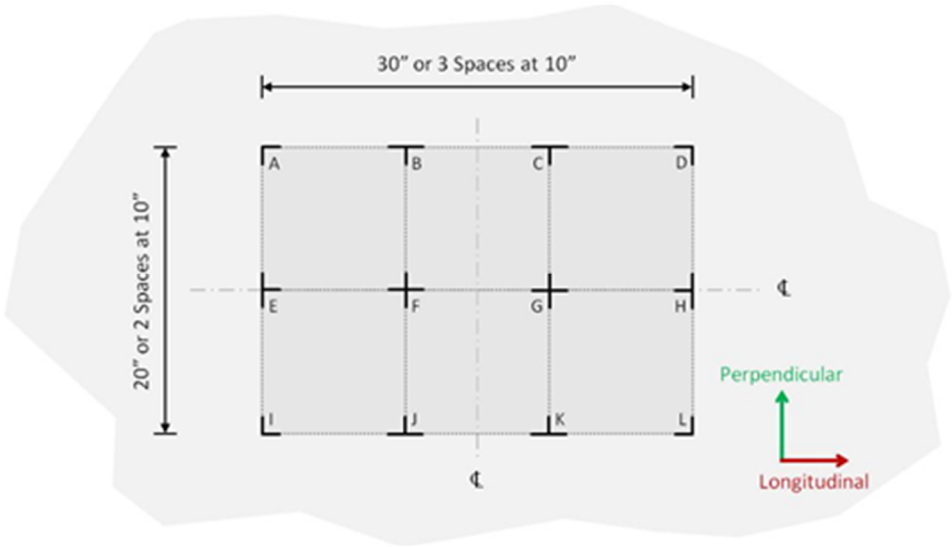

Figure 5 - Cracking Index Grid Diagram

Each line segment of the grid was inspected for cracks, and the widths of cracks crossing a line segment were summed. That sum was then divided by the length of the line segment and reported in units of millimeter per meter (mm/m). This parameter was calculated collectively for all of the vertical line segments in the grid to obtain the perpendicular cracking index and the horizontal line segments to obtain the longitudinal cracking index. To provide a single parameter for the entire surface, a Combined Cracking Index ("CCI") is calculated by summing the crack widths crossing all reference grid lines and dividing the result by the sum of all gridline lengths.

Q128. Is the crack width summation approach endorsed by concrete industry guidelines?

A128. (JS, CB, OB) Yes. Crack indexing is a method that is recommended by industry guidelines (ISE Guideline, FHWA Guideline) as a non-destructive approach for estimating expansion that does not require any pre-installed instrumentation. *See* ISE Guideline (NER012); FHWA Guideline § 4.2 and app. B (NER013). In fact, the term "Cracking Index" was taken from the FHWA Guideline.

In addition, in its 2018 report, EPRI performed a comparison of various test methods for assessing expansion to-date in ASR-affected structures. EPRI stated that "in-situ monitoring of cracks and deformation is considered the most reliable means to evaluate the ASR condition in structures." EPRI Evaluation Report at 2-17 (NER017).

Q129. Please elaborate on how embedded rods were used to measure expansion.

A129. (JS, CB, OB) The shear and reinforcement anchorage test specimens had several embedded stainless steel rods for expansion monitoring: some for in-plane expansion measurements and some for through-thickness expansion measurements. The ends of each rod were machined to create a fixed reference point for measurement of the distance between rods. Proprietary Appendix, Figure 3 (NER003) is a representation of the center portion of the test specimen that depicts the arrangement of the rods.

Digital calipers were used to measure the distance between these reference points. Each measurement was divided by the original distance between the reference points to determine the percent expansion. These measurements were taken periodically to trend the development of ASR-related expansion over time. Measurements were obtained from both sides of each embedded rod.

During fabrication, cone-shaped nylon blockouts were used over the portion of the rod that was in the cover depth above the reinforcing bars (i.e., 2-inch depth on one side; 3-inch depth on the other side). The blockouts were removed following concrete curing, leaving a cavity around the ends of the embedded rods. *See* MPR-4262 § 5.1.1 (NER022). In this manner, any non-representative expansion from the concrete cover would not affect the expansion measurements by deflecting the embedded rods. Therefore, the changes in rod-to-rod measurements reflected the bulk expansion of the specimens in a given direction.

Q130. What were the key conclusions from the LSTP with regard to expansion behavior?

A130. (JS, CB, OB) The test results confirmed that ASR expansion will occur preferentially, but not exclusively, in the unreinforced direction.

The reinforcement configuration of the test specimens in the LSTP included bi-directional reinforcement mats in the in-plane directions to match most concrete structures at Seabrook. Expansion monitoring during the test programs identified that expansion will initially occur at approximately the same rate in all directions. However, after expansion in the in-plane directions reached [See note in Proprietary Appendix, Figure 4 (NER003)], expansion reoriented to occur primarily in the unreinforced direction. The confinement provided by the reinforcement mats caused in-plane expansion to plateau. Subsequent expansion occurred primarily in the unreinforced, through-thickness direction. *See* MPR-4273 § 6.1.1 (INT019-R)(NP), (INT021)(P).

Proprietary Appendix, Figure 4 (NER003) is a plot of expansion for one of the test specimens and illustrates this behavior. Expansion behavior in this test specimen is typical of other fabricated test specimens. In Proprietary Appendix, Figure 4 (NER003), the blue line represents expansion in the through-thickness direction, the red and green lines represent expansion in the in-plane directions (longitudinal and perpendicular) obtained using the distance between embedded reference pins, and the orange line represents expansion in the in-plane directions from crack index measurements.

Another important conclusion from the LSTP regarding expansion was the demonstration that CCI is a reliable and accurate measure of in-plane expansion. As shown in Proprietary Appendix, Figure 4 (NER003), in-plane expansion using CCI compared favorably to in-plane expansion measured using embedded rods. This conclusion is consistent with industry

guidelines (*see*, *e.g.*, ISE Guideline (NER012), FHWA Guideline (NER013)) that support use of crack width summation techniques.

Q131. MPR-4273 identified that large cracking was observed on the side of the LSTP test specimens. Please describe this observation.

A131. (JS, CB, OB) As ASR developed in the test specimens, a large crack was noted in the center of the surfaces of the beam that were between the reinforcement mats. For each specimen, this large crack formed during environmental conditioning, prior to any structural testing. *See* MPR-4273 § 4.2.3 (INT019-R)(NP), (INT021)(P). Proprietary Appendix, Figure 5 (NER003) is a photograph showing the large crack in one of the beam specimens. (The size of the crack is "large" relative to the very fine ASR cracks, but is not unusual in the total population of concrete cracks from any cause).

Q132. What was the explanation for this cracking?

A132. (JS, CB, OB) As discussed in Section 5.2 of MPR-4262 (NER022), and summarized in Section 4.2.3 of MPR-4273 (INT019-R(NP), INT021(P)), FSEL and MPR concluded that the large crack was an edge effect, meaning that it occurred only at the surface of the specimen and did not affect the load testing. To confirm this conclusion, after testing was completed on a beam specimen, FSEL sectioned the beam cross section (i.e., cut with a concrete saw) to assess the depth of the crack. This process was completed for one anchor test specimen and two shear test specimens. *See* MPR-4273 § 4.2.3 (INT019-R)(NP), (INT021)(P). In all cases, FSEL observed that the large crack penetrated only a few inches into the specimen. In Section 3.2.1 of the Final SE for the LAR, the NRC also discussed the observed large crack, the FSEL investigation of this cracking by sectioning test specimens, and the conclusion that the crack was an edge effect. *See* Final SE at 10 (INT025).

While total expansion in the through-thickness direction was consistent through the cross-section of the test specimen, the cracking behavior is different. The test observations suggested that along the specimen edges, expansion is concentrated into a large crack; whereas away from the edge, expansion is distributed into finer cracks along the specimen cross-section. Proprietary Appendix, Figure 6 (NER003) illustrates this expansion behavior. Section A of the figure is at the edge of the specimen and shows one large crack in the middle of the specimen. Section B is in the intermediate region near the edge and has a few cracks that are smaller in size than the one large crack from Section A. Section C is in the center of the specimen and is least affected by the specimen boundary conditions; in this location, there are many fine cracks. However, the total expansion, represented by the sum of all crack widths, is relatively constant through the regions.

Q133. Is the edge effect cracking relevant for Seabrook?

A133. (JS, CB, OB, EC) No. The large crack is not representative of expansion behavior of structures at Seabrook, which have a network of members that are either cast together or integrally cast with special joint reinforcing details. In an actual structure, a vertical wall with two-dimensional reinforcement will be confined in the through-thickness direction at its intersection with neighboring members (i.e., at the top and bottom with floor and ceiling slabs, at the sides with perpendicular walls, and uniformly along the wall face by the subgrade material for below grade external walls). The confinement provided by the network of members in a structure is likely sufficient to preclude large surface cracks like those seen in the FSEL test specimens.

NextEra has obtained dozens of cores for SMP activities over the last several years and has inspected the cores and the associated boreholes to look for evidence of mid-plane cracking. No such cracks have been observed.

Q134. Does the large crack challenge the validity of the test results?

A134. (JS, CB, OB) No. If anything, the presence of the large crack makes the test results slightly more conservative, because the cross sectional area of the beam that is unaffected by the large crack is slightly reduced, as discussed in MPR-4273 (INT019-R(NP), INT021(P)). Sectioning of the specimens clearly demonstrated that the depth of cracking was limited. However, in the hypothetical case that deeper cracking had occurred, the crack would act like a pre-existing failure plane and would be expected to result in a significant reduction of structural capacity. As we will discuss later, the test results exhibited no such degradation.

Q135. Did the LSTP characterize the potential for variation of ASR progression within each test specimen?

A135. (JS, CB, OB) Yes. ASR progression in the test specimens was monitored in several different ways and in many different locations. FSEL performed crack width summation on both sides of the test specimen, which provided in-plane expansion at the surface in two separate locations. In addition, FSEL used several through-specimen embedded rods to monitor expansion on both sides of the specimen in multiple locations. Through thickness expansion was also monitored by through-specimen embedded rods on both sides of each specimen. While the results showed variability that is within the expected range for concrete, there were no indications of significant non-homogeneity within any test specimen.

In addition, petrographic examination was performed on one core from each specimen. The petrographic examinations did not show significant variation of ASR symptoms through the length of the cores.

Q136. Were any measures taken to address leaching of alkali materials from the concrete during the LSTP?

A136. (JS, CB, OB) Yes. The potential concern with leaching is that exposure to water, as was done in the LSTP for accelerating ASR development, could remove some of the chemical

reactants that produce ASR and therefore cause non-representative cracking at the surface of the specimen. The LSTP specifically addressed this concern in the development stage through experimental design that would have identified any differences between expansion at the surface and in the middle of the specimens.

As described in A126, expansion in the shear and reinforcement anchorage test specimens was measured by both embedded rods and CCI. CCI values are determined from surface cracking and would be most susceptible to the influence of non-representative expansion behavior due to leaching. The LSTP data showed that the CCI values agreed closely with the observed in-plane expansion from the embedded rods, indicating ASR development on the surface was consistent with ASR development within the specimen [*see* Proprietary Appendix, Figure 4 (NER003)]. *See also* MPR-4273 § 4.5 (INT019-R)(NP), (INT021)(P). Therefore, leaching of alkali materials did not have a significant effect on ASR development of the test specimens.

D. <u>Structural Testing</u>

1. Shear Test Program

Q137. What was the purpose of performing the Shear Test Program?

A137. (JS, CB, OB) One of the limit states of concern for reinforced concrete is shear, which occurs when unaligned forces push one part of a structural member in one direction and another part of the member in another direction. These forces produce a diagonal failure plane (i.e., a diagonal crack) between the applied load and the support that reacts the load. As discussed in the response to A85, the test data from published technical literature for shear performance of ASR-affected concrete were not sufficiently representative of Seabrook for a long-term structural assessment. Therefore, NextEra pursued its own large-scale testing, through the Shear Test Program, to provide the desired test data. Ultimately, the Shear Test Program

assessed the applicability of the Code equations for calculating shear capacity to reinforced concrete structures affected by ASR.

Q138. How does the Shear Test Program support the LAR?

A138. (JS, CB, OB) The conclusions from the Shear Test Program are used to justify an aspect of the methodology in the LAR. Specifically, the material properties from the original design calculations may be used to calculate shear capacity of ASR-affected structures using expressions from the design codes. This conclusion is applicable provided that observed expansion at Seabrook is below the maximum through-thickness and volumetric expansion values observed in the Shear test specimens that exhibited no adverse structural performance impacts during load testing.

Q139. Please summarize how structural testing was performed for the Shear Test Program.

A139. (JS, CB, OB) As described in MPR-4273, the Shear Test Program included a total of [See Proprietary Appendix, Table 1 (NER003)] tests (two tests on most specimens). Structural testing consisted of load testing performed on each end of the beam. A schematic of this test for one side of the beam is shown in Figure 6 below.

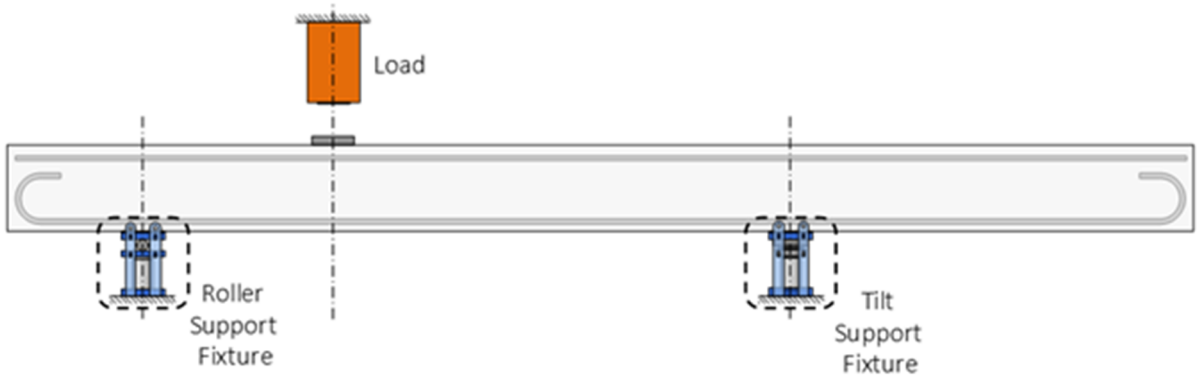

Figure 6 - Shear Test Setup

During the load test, FSEL monitored the effects on the specimen from the applied load both visually and with instrumentation. FSEL placed linear voltage differential transducers (i.e.,

position sensors) at selected locations on the test setup to monitor deflection (i.e., displacements induced by bending) of the beam. At 10% intervals of the design capacity (i.e., at 10%, 20%, 30%, etc.), FSEL personnel would mark cracks in the test area and photograph the specimen. Consistent with ACI 318, the shear capacity was determined based on the onset of diagonal shear cracking, which was visually observable and is typically shown by a small dip in the overall load-deflection response. Load testing continued until "failure" of the specimen, as identified by a rapid loss in load carrying capacity or a significant amount of structural distress (e.g., wide cracking, large deflections, etc.). The test results were compared against the calculated shear capacity and the control specimens to determine the potential impact of ASR. Comparison to the control specimen indicated the impact of ASR; comparison to the Code capacity confirmed that use of the Code expression for capacity remained conservative.

The testing technique, test specimens, and data interpretation were consistent with those employed by ACI-ASCE Committee 326 in developing the shear design expressions of ACI 318-71 (NRC049), the Code of Record for Seabrook. *See* Report of ACI-ASCE Committee 326, "Shear and Diagonal Tension" (1962) (NER051). Figure 7 below is a diagram from that report showing diagonal cracking on a beam loaded in shear. The test set up for the LSTP shown in Figure 6 was adapted from this configuration.

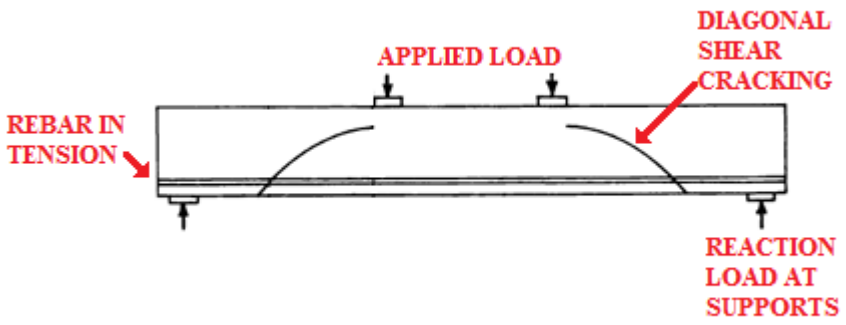

Figure 7 - Beam Shear Testing [adapted from ACI-ASCE Committee 326 (1962)]

Q140. What were the reasons for selecting this experimental design and test setup?

A140. (JS, CB, OB) The test configuration (simply supported beam with point loading) is typical for testing used to develop empirical ACI code expressions. *See* MPR-3848 § 4.3 (NER015); *see also* Reineck 2010; Reineck 2013; and ACI-ASCE 326 Report (1962) (NRC051). The experimental design is for separate effects testing and deliberately omitted additional forces (e.g., axial forces) that might impact the results, which is consistent with industry practices for shear testing. For Seabrook, additional forces due to building configuration or other loads (e.g., seismic) are accounted for in the SEM, and did not need to be simulated in the load tests.

Q141. What were the key conclusions from the Shear Test Program?

A141. (JS, CB, OB) Results from the Shear Test Program indicate that there was no reduction of shear capacity in ASR-affected reinforced concrete members with through-thickness expansion levels up to [*see* Proprietary Appendix, Table 2 (NER003)] or volumetric expansion levels up to [*see id.*], which are the maximum expansion levels exhibited by the test specimens. The ASR-affected test specimens were all capable of reaching their calculated shear strength (i.e., capacity) per ACI 318-71 (NRC049) and exceeded the capacity of the control specimen. The test results indicated a repeatable trend that higher levels of ASR resulted in higher shear capacity due to the "prestressing effect" that is induced by ASR (see A68 and A69 for previous discussion on the "prestressing effect"). *See* MPR-4273 §§ 5.2.2 & 6.2.2 (INT019-R)(NP), (INT021)(P).

Proprietary Appendix, Figures 7 and 8 (NER003) provide photographs of the test specimens during load testing. Proprietary Appendix, Figure 7 (NER003) shows the entire test set up and Proprietary Appendix, Figure 8 (NER003) focuses on cracking in the region of the beam subjected to shear testing. The cracking shown in Proprietary Appendix, Figure (NER003) 8 is amplified by black marker over cracked locations, so that the cracks could be better

identified in photographs. The actual crack widths are much finer than what appears in the photographs.

These photographs, along with many others, are included in the commercial grade dedication report for the Shear Test Program. *See* MPR-4259 at D-2615 to D-2616 (NER025). Photographs are also presented in MPR-4262 at 6-10, fig. 6-9 (NER022).

Q142. How do these conclusions compare to published literature?

A142. (JS, CB, OB) Published literature on shear testing of ASR-affected reinforced concrete includes a range of results that generally reflects the degree of reinforcement. Previously-published technical papers in the literature note that concrete reinforced in three directions will not be significantly affected even by fairly severe ASR expansions, while literature of ASR-affected test specimens without transverse reinforcing bars indicate shear capacity results ranging from a slight increase to a loss of 25%. *See* MPR-4273 § 5.2.3 (INT019-R)(NP), (INT021)(P). As previously discussed in A79, nearly all concrete members of seismic Category I structures at Seabrook are reinforced in two directions by mats of perpendicular reinforcing bars that are several inches below the surface of the wall. (The exceptions are the walls of Containment and the lower portions of the CEB, which are reinforced triaxially). The test results from the LSTP indicate that the test specimens with bi-directional reinforcement behaved in a manner that showed no capacity reduction with ASR-induced expansion up to [*see* Proprietary Appendix, Table 2 (NER003)]. This behavior is comparable to the published test results with concrete reinforced in three directions.

2. Reinforcement Anchorage Test Program

Q143. What was the purpose of performing the Reinforcement Anchorage Test Program?

A143. (JS, CB, OB) One of the limit states of concern for ASR-affected reinforced concrete is reinforcement anchorage (defined in A62 and the Glossary (NER002)), which could be compromised if the bond between the reinforcing bars and surrounding concrete is adversely affected by ASR. Put simply, if the concrete surrounding a reinforcing bar is cracked due to ASR, force transfer between the bar and the surrounding concrete may be adversely affected. In this case, tensile loads would not transfer between the concrete and the reinforcing bars and the member would fail at loads less than its design strength because concrete is weak in tension. Ultimately, the Reinforcement Anchorage Test Program assessed the applicability of the Code equations for calculating development length and flexural capacity to reinforced concrete structures affected by ASR.

As discussed in the response to A85, the test data from published technical literature for reinforcement anchorage performance of ASR-affected concrete were not sufficiently representative of reinforced concrete structures at Seabrook for a long-term structural assessment. As a result, NextEra pursued its own large-scale testing, through the Reinforcement Anchorage Test Program, to provide the desired test data.

Q144. How does the Reinforcement Anchorage Test Program support the LAR?

A144. (JS, CB, OB) The conclusions from the Reinforcement Anchorage Test Program are used to justify a particular aspect of the methodology in the LAR. Specifically, the material properties from the original design calculation may be used to calculate reinforcement development length and flexural capacity of ASR-affected structures using expressions from the design codes. This conclusion is applicable provided that observed expansion at Seabrook is

below the maximum through-thickness and volumetric expansion values observed in the Reinforcement Anchorage test specimens that demonstrated no adverse structural performance impacts during load testing.

Q145. Please summarize the test specimens for the Reinforcement Anchorage Test Program.

A145. (JS, CB, OB) In the Reinforcement Anchorage Test Program, FSEL fabricated [*see* Proprietary Appendix, Table 1 (NER003)] test specimens. Specimen fabrication and conditioning were comparable to the Shear Test Program in every respect except the reinforcement configuration, which included reinforcement splices (i.e., lap splices) at the longitudinal center of the beam (*see* Proprietary Appendix, Figure 1 (NER003) for a diagram of the reinforcement and further discussion in A146 below on lap splices). *See also* MPR-4273 §§ 1.2.3 & 5.3.1 (INT019-R)(NP), (INT021)(P).

The test specimens were of large size and were designed to represent the reinforced concrete structures at Seabrook to the extent practical. Development of ASR was accelerated by several means, which enabled structural testing on specimens with ASR that equaled and exceeded the condition of Seabrook (see A115 and A123).

Q146. Please describe what is meant by a "lap splice" and why this feature of the test specimens is important for representing the reinforcement anchorage limit state.

A146. (JS, CB, OB) For very large reinforced concrete structural members, a single length of reinforcing bar may be insufficient for the dimensions of the structure. In this case, multiple lengths of reinforcing bars must be spliced together to provide continuous reinforcement. These splices consist of overlapping the reinforcing bars (i.e., lap splices) over a sufficient length to allow transfer of load from one reinforcing bar to the next (i.e., development length). For the reinforcement anchorage limit state, these splices are potential weak points and

were therefore the focus of this test program. Beam test specimens with rebar lap splices are endorsed in ACI 408R-03 (NRC052) as being representative of full-size members for the purpose of structural testing of reinforcement anchorage. The test specimens for the LSTP conservatively used the minimum overlap length for reinforcing bar segments specified in ACI 318-71 (NRC049), although reinforced concrete members at Seabrook typically used an overlap length (i.e., lap splice length) much greater than this minimum value.

Q147. Please summarize how structural testing was performed for the Reinforcement Anchorage Test Program.

A147. (JS, CB, OB) In the Reinforcement Anchorage Test Program, FSEL conducted a total of [*see* Proprietary Appendix, Table 1 (NER003)] tests (one per specimen). Four-point load testing was performed on each beam to impose a high flexural load on the splice region at the center of the beam. A schematic of this test is shown below in Figure 8.

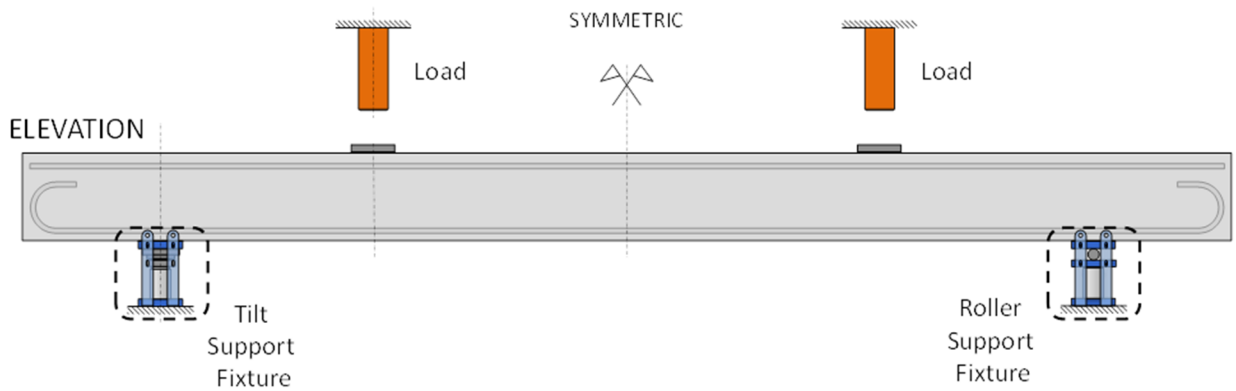

Figure 8 - Reinforcement Anchorage Test Setup

Load testing was performed on each test specimen until failure, as identified by a rapid loss in load carrying capacity.

A concrete element with spliced reinforcing bars should perform similarly to elements with continuous reinforcement. In this case, failure of the beam will be limited by yielding of the reinforcing bars, rather than inadequate load transfer through the splice. Yielding of the

reinforcing bars refers to permanent deformation of the steel, which occurs when deflection of the beam produces stresses in the reinforcing bars that reach their yield strength. This failure mode is preferred for structural design because it is more gradual than the sudden brittle failure of concrete that could occur with failure of reinforcement anchorage at the lap splice.

For the LSTP, the strategy was to determine at what level of ASR-induced expansion the beam specimens could still fully develop their design flexural capacity, determined using applicable Code expressions. Accordingly, the load capacity observed during structural testing was compared against the design flexural capacity to determine the potential impact of ASR. Results were also compared against performance of the control specimen.

Q148. What were the reasons for selecting this experimental design and test setup?

A148. (JS, CB, OB) The test setup for the Reinforcement Anchorage Test Program imposed a high flexural demand on the test specimen in the center region with the reinforcement splice and therefore ensured that the test would provide results on reinforcement anchorage failure. *See* MPR-3848 § 4.3 (NER015).

In addition, this test setup is consistent with industry best practices for this type of testing. ACI Report 408R-03, "Bond and Development of Straight Reinforcing Bars in Tension" describes four test specimen configurations to study the bond between reinforcing bars and concrete. ACI 408R-03 states that the splice specimens "represent larger-scale specimens designed to directly measure development and splice strengths in full-size members." ACI 408R-03 § 1.2 (NRC052).

Q149. What were the key conclusions from the Reinforcement Anchorage Test Program?

A149. (JS, CB, OB) Results from the Reinforcement Anchorage Test Program indicate that there was no reduction in the anchorage performance of reinforcement lap splices in

ASR-affected concrete with through-thickness expansion levels up to [*see* Proprietary Appendix, Table 2 (NER003)] or volumetric expansion levels up to [*see* Proprietary Appendix, Table 2 (NER003)], which are the maximum expansion levels exhibited by the test specimens. The ASR-affected test specimens and the control specimen were all capable of reaching their calculated flexural strength per ACI 318-71 (NRC049). In addition, the bending moments associated with reinforcement yield and capacity were relatively insensitive to the level of ASR-induced expansion–i.e., each specimen developed the full yield strength of the rebar. *See* MPR-4273 §§ 5.3.2 & 6.2.4 (INT019-R)(NP), (INT021)(P).

3. Anchor Test Program

Q150. What was the purpose of performing the Anchor Test Program?

A150. (JS, CB, OB) One of the limit states of concern for Seabrook is capacity of embedded anchors and attachments. Plant components and internal structural members are attached to the reinforced concrete structure of the building through anchors and embedments, which are part of the load path to ground. If the applied load attached to the anchor exceeds the capacity of the concrete to hold the anchor, then a failure could occur. In this context, the concrete failure modes are (1) breakout, which is a failure of the concrete around the anchor in a cone-like shape emanating from the anchor head, and (2) pull-out, where there is a loss of load resistance due to local concrete failure at the interface with the anchor, and the anchor slides out of the concrete. *See* MPR-3722 at 2-6 (NER023). Degradation of the concrete by ASR may eventually reduce the anchor capacity of the concrete.

As discussed in A85, test data from published technical literature for anchor capacity of ASR-affected concrete were not available. Therefore, NextEra pursued its own large-scale testing, through the Anchor Test Program, to provide the desired test data.

Q151. How does the Anchor Test Program support the LAR?

A151. (JS, CB, OB) The conclusions from the Anchor Test Program are used to justify a particular aspect of the methodology in the LAR. Specifically, the design basis methodology for assuring satisfactory anchor capacity remains valid provided that observed expansion at Seabrook is below the maximum in-plane expansion values observed in the Anchor Test Program that did not demonstrate adverse impacts on anchor capacity.

Q152. Please summarize the anchors that were used in the Anchor Test Program.

A152. (JS, CB, OB) Two different types of anchors were used for the Anchor Test Program: Hilti Kwik Bolt 3 expansion anchors and Drillco Maxi Bolt undercut anchors. *See* MPR-3722 §§ 2.2.1 & 2.2.2 (NER023). An expansion anchor includes an expansion element or wedge along the shaft of the anchor to establish a friction fit to the surrounding concrete. An undercut anchor is installed in a hole that is drilled using a special undercutting tool that creates a larger diameter pocket at the desired embedment depth. When the undercut anchor is correctly positioned, an expansion element is deployed to establish a positive bearing surface within the pocket.

A range of anchor sizes and embedment depths were used for the series of tests to represent the anchors at Seabrook. The range of embedment depths was largely limited to depths where anchor capacity is controlled by concrete strength. At deeper embedments, the anchor capacity is limited by failure of the anchor steel shank, which would not be a useful result for the purpose of the LSTP. For the Drillco Maxi-Bolts, the embedment depths used for the LSTP were actually shallower than would be required for installation at the plant. At the embedment depth specified for Seabrook, the small margin between steel shank capacity and concrete capacity would make it difficult to evaluate changes in concrete behavior, because failures of the

steel shank do not provide information on the concrete. *See* MPR-4273 § 5.1.1 (INT019-R)(NP), (INT021)(P).

FSEL installed some anchors shortly after fabrication (i.e., prior to ASR development) and some anchors just before testing (i.e., after ASR development) to simulate potential conditions at Seabrook from anchors installed throughout plant life. *See id.*

Seabrook also has cast-in-place anchors that were installed during original placement of the concrete. Cast-in-place anchors are similar to undercut anchors, because they both utilize a positive bearing surface to transfer load to the concrete. Thus, undercut anchors were suitable representatives of cast-in-place anchors for the Anchor Test Program. *See* MPR-3722 § 2.2.2 (NER023).

Q153. Please summarize how structural testing was performed for the Anchor Test Program.

A153. (JS, CB, OB) Anchor performance was evaluated by applying a tensile load to the anchor and using a reaction frame to distribute the load to the concrete surface a sufficient radius away from the anchor. Testing was performed at a range of ASR levels, including control testing on specimens promptly after the 28-day cure period and before any deleterious ASR development. The test program consisted of a total of [*see* Proprietary Appendix, Table 1 (NER003)] anchor tests. Figure 9 below provides a photograph of the test setup for shallow anchors, which is representative of the test setup for deep anchors (i.e., same general concept with larger reaction frame).

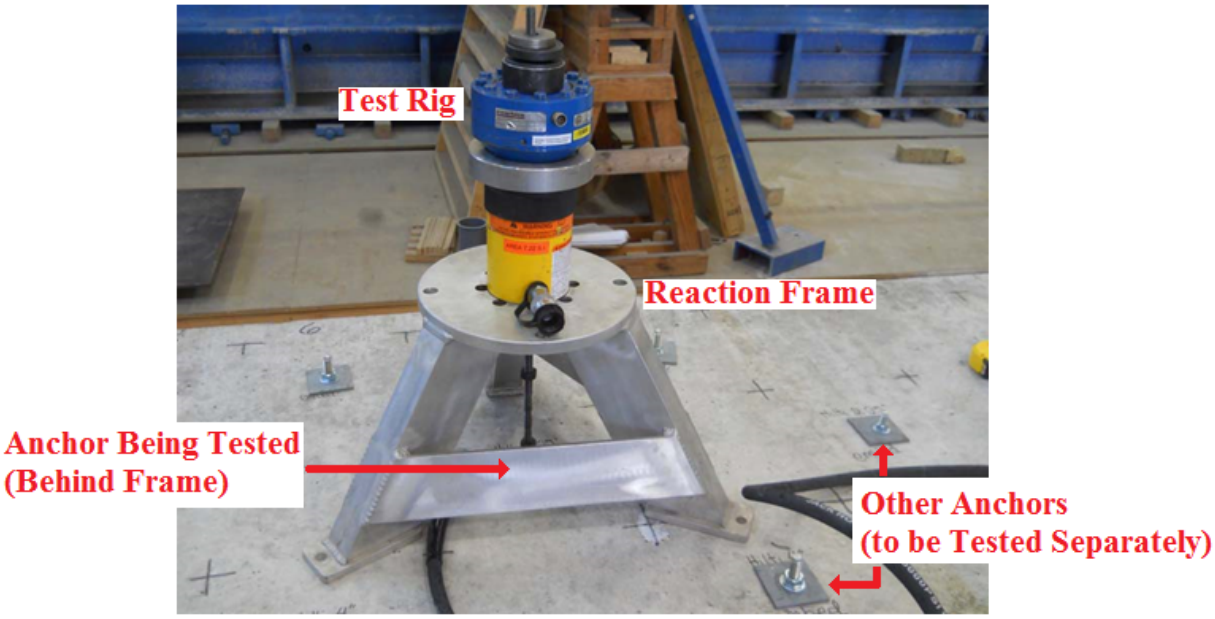

Figure 9 - Unconfined Anchor Test Setup for Shallow Anchors

The test proceeded by increasing the load until anchor failure, which occurred by either concrete breakout, failure of the anchor shank, or anchor pull-out. The test results from ASR-affected specimens were compared against the control test results to determine the effect of ASR. *See* MPR-4273 § 5.1.1 (INT019-R)(NP), (INT021)(P).

Q154. What were the reasons for selecting this test setup and experimental design?

A154. (JS, CB, OB) The approach for anchor testing was consistent with the original test program that forms the rationale for Seabrook's anchors satisfying NRC IE Bulletin 79-02, which is the plant design basis for anchor bolts. *See* MPR-4273 § 5.1.1 (INT019-R)(NP), (INT021)(P).

Particular aspects of the Anchor Test Program that were important for establishing representativeness were (1) using both expansion and undercut anchor bolts, (2) using expansion anchors with similar wedging characteristics as those installed at the plant, (3) installing some anchor bolts shortly after concrete placement and others just before testing (and after ASR had

developed), (4) testing over a range of anchor embedment depths, and (5) using a test apparatus that did not confine the concrete.

Q155. What were the key conclusions from the Anchor Test Program?

A155. (JS, CB, OB) Results from the testing of the girder specimens and the fabricated specimens in the Anchor Test Program indicate that there is no reduction of anchor capacity in ASR-affected concrete with in-plane expansion levels of below [*see* Proprietary Appendix, Table 2 (NER003)]. Test results confirmed that anchor performance was insensitive to through-thickness expansion of up to about [*see* Proprietary Appendix, Table 2 (NER003)], which was the maximum observed through-thickness expansion among the fabricated test specimens. Test results also did not show any differences in anchor performance between anchors installed shortly after casting the specimen (where ASR expansion occurred *after* anchor installation) and anchors installed shortly before load testing (where ASR expansion occurred *before* anchor installation). *See* MPR-4273 §§ 5.1.2 & 6.2.1 (INT019-R)(NP), (INT021)(P).

4. Instrumentation Test Program

Q156. What was the purpose of performing the Instrumentation Test Program?

A156. (JS, CB, OB) The Instrumentation Test Program was performed to determine an appropriate method for monitoring through-thickness expansion at Seabrook. During the course of the test programs, MPR and FSEL identified that expansion in the plane of the accessible surface where reinforcement was present (i.e., the in-plane directions) had plateaued, while expansion in the through-thickness direction continued. Thus, through-thickness expansion would need to be monitored for long-term aging management of reinforced concrete at Seabrook.

Monitoring the expansion on the exposed surfaces of a structural wall or slab is routinely performed on ASR-affected structures. As previously noted, various industry documents suggest crack width monitoring techniques (i.e., crack indexing) can be used to estimate expansions on

the visible surface. Measuring expansion through the thickness of a structural member is more complicated, and there is no guidance endorsed by the structural engineering community. Furthermore, there is not a specific, industry-sanctioned methodology for through-thickness expansion monitoring that is practical for back-fitting in structures at a nuclear power plant. Therefore, NextEra pursued its own large-scale testing through the Instrumentation Test Program to determine an appropriate approach for measuring through-thickness expansion.

Q157. What were the key conclusions from the Instrumentation Test Program?

A157. (JS, CB, OB) Based on the experience during the test program regarding quality of data, ease of installation, and reliability, the snap-ring borehole extensometer ("SRBE") was identified as the best instrument for measuring through-thickness expansion at Seabrook. *See* MPR-4273 §§ 5.4.2 & 5.4.3 (INT019-R)(NP), (INT021)(P).

The SRBE consists of a rod that is anchored to a fixed point inside the concrete. A core is removed from the concrete to provide a cylindrical hole where an anchor is installed. The rod, which is attached to the anchor, passes through another anchor that is affixed near the concrete surface and has an accessible reference surface. As the concrete member expands in the through-thickness direction, the end of the rod moves relative to the anchor near the surface. Expansion measurements are performed by using a depth micrometer to determine the distance from the end of the rod to the reference surface. The SRBE anchors are fixed in place by snap rings that spring out of the frame of the anchor to engage the inside wall of the borehole. Figure 10 provides a photograph of the SRBEs used in the LSTP. Figure 11 is a diagram showing an extensometer when it is installed.

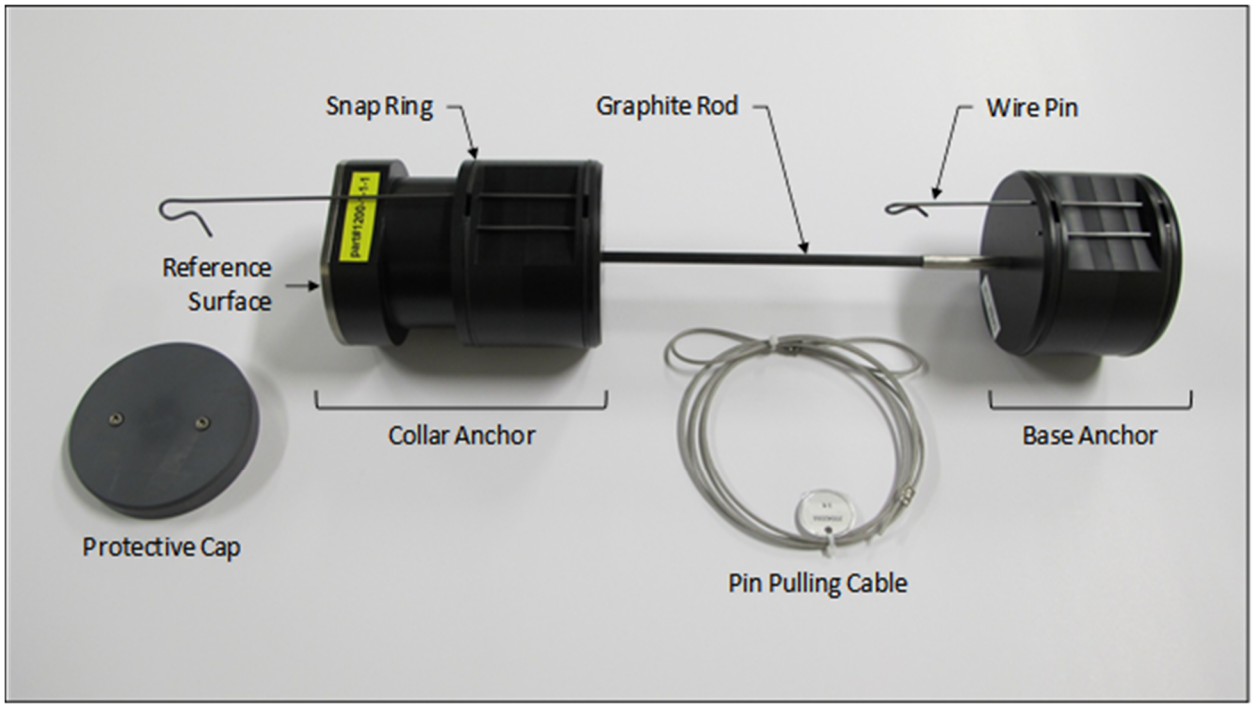

Figure 10 - Photograph of SRBE Components (MPR-4231, fig 2-5 (NER021))

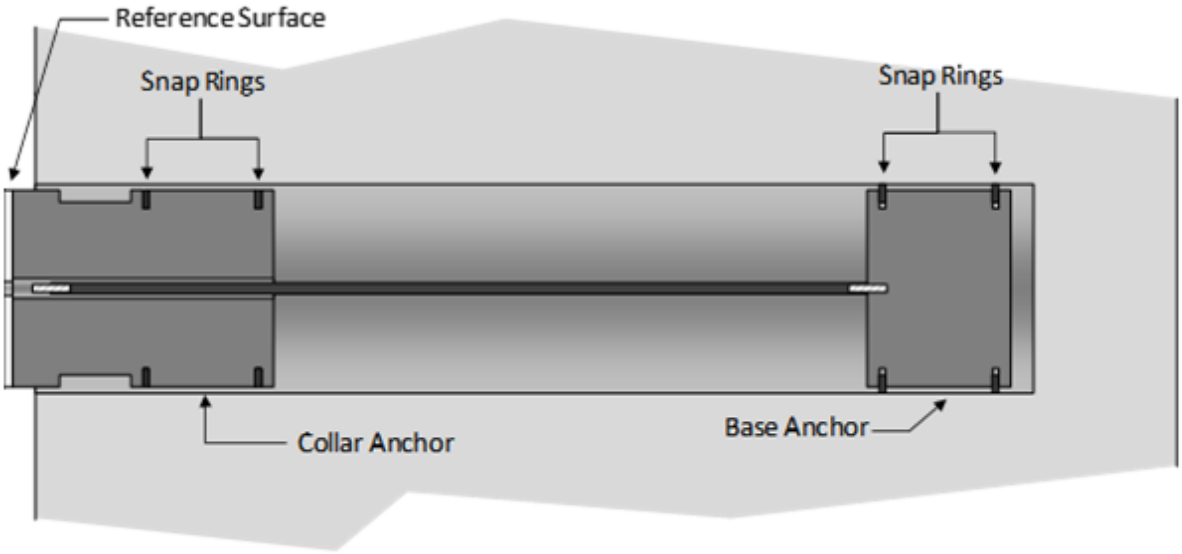

Figure 11 - Illustration of SRBE during Installation (MPR-4231, fig 2-6 (NER021))

VIII. STRUCTURES MONITORING PROGRAM

A. Monitoring Parameters

Q158. What is the purpose of the Structures Monitoring Program at Seabrook?

A158. (MC, EC) The SMP addresses aging of structural elements within the scope of the maintenance rule, 10 C.F.R. § 50.65, which includes safety-related structures and selected non-safety related structures. *See* SMPM, ch. 1 § 1.1 (NER007). The SMP provides the framework for periodic inspections to assure timely identification, assessment, and repair or replacement of degraded structural elements. These actions demonstrate that the effects of aging are adequately managed and the intended function of the structures is maintained consistent with the current licensing basis. The monitoring and acceptance criteria in the SMP are designed to provide enough time for corrective action before loss of intended function. The SMP does *not* result in a conclusion that structures will remain satisfactory for the duration of plant life.

An SMP is a typical program at nuclear power plants, and is also addressed in NUREG-1801, which is the NRC's Generic Aging Lessons Learned Report for License Renewal. The purpose for Seabrook's SMP is consistent with existing regulatory guidance—specifically, NUREG-1800, Rev. 2, "Standard Review Plan for Review of License Renewal Applications for Nuclear Power Plants" ("NUREG-1800") Appendix A, Sections A.1.1 and A.1.2.3.6—which is the standard review plan ("SRP") for License Renewal Applications ("LRAs"). (While this contention is not within the context of License Renewal, the guidance from NUREG-1800, Appendix A, is reasonable for the existing SMP and is applicable for the Seabrook LRA that was approved by the NRC in March 2019).

At Seabrook, the SMP includes specific provisions for ASR monitoring. Plant personnel trend the observed expansion levels and would trigger corrective action before loss of intended function of the structures occurred due to ASR. Again, similar to the overall SMP, the purpose

of the provisions for ASR monitoring is not to project ASR levels through the end of plant life. Furthermore, the purpose of the provisions of ASR monitoring is not to explicitly track all ASR progression throughout the plant by quantitative measurements; it is not necessary to perform such monitoring on ASR that does not have a structural impact (i.e., ASR-induced expansion at very low levels).

Q159. Please summarize the aspects of the Structures Monitoring Program at Seabrook that rely on the LSTP.

A159. (MC, JS, CB, EC) The SMP uses the conclusions from the LSTP to establish acceptance criteria for observed concrete expansion; specifically, the expansion limits for application of the LSTP results. Conclusions from the LSTP are also used to corroborate the technical basis for the screening criterion for installing an extensometer.

As described in the LAR and the SMP, Seabrook installs an extensometer to measure through-thickness expansion when in-plane expansion reaches 0.1% (1 mm/m). *See* SMPM, ch. 3 at 3-1.13, tbl. 3-1-1 (NER007). This value was established based on guidelines from published literature. Expansion behavior from the test program corroborated that this value was appropriate for Seabrook (*see* further discussion in A180).

The test conclusions are directly incorporated as acceptance criteria for expansion levels. Specifically, the acceptance criteria for through-thickness expansion, volumetric expansion, and in-plane expansion are provided in Proprietary Appendix, Table 3 (NER003) (technical basis and further discussion provided in Section VII.B). *See also* SMPM, ch. 3 §§ 1.3.1 to 1.3.3 (NER007).

The SMP includes the action to perform periodic expansion assessments in accordance with the license condition discussed in Section VI.C. *See* SMPM, ch. 3 § 1.3.6 (NER007). As part of this assessment, NextEra performs a check of expansion relative to the test program

limits. The potential for future expansion will be determined by considering the "expansion rate" observed over a series of measurements and the projected time to reach the test program limits. In addition to plant practices for routine expansion monitoring, this action to perform overarching periodic expansion assessments of all monitored locations ensures that NextEra will take action before the acceptance criteria are exceeded.

Q160. How does NextEra use these monitoring data to evaluate structural adequacy?

A160. (EC) NextEra obtains data from selected monitoring locations and compares these values against the SMP acceptance criteria described in Proprietary Appendix, Table 3 (NER003). Provided that the monitoring results are within the acceptance criteria, then the conclusions from the LSTP can be applied for the SEM defined in the LAR.

Q161. Please summarize the approach for the ASR Monitoring Program.

A161. (EC) The ASR Monitoring Program has been added to the SMP to leverage the existing programmatic infrastructure at Seabrook. The SMP includes routine periodic inspections of all seismic Category I buildings at the plant and Containment. If symptoms of ASR are identified, subsequent actions are determined based on the extent of ASR progression. Initially, NextEra uses CCI to determine the in-plane expansion, which is used as a screening tool. If in-plane expansion exceeds 0.1% (1 mm/m), NextEra installs an extensometer to commence through-thickness expansion monitoring. NextEra then monitors in-plane, through-thickness, and volumetric expansion to ensure that these parameters remain within the limits established by the LSTP.

Q162. Why do these parameters provide an appropriate approach for measuring ASR advancement in concrete at Seabrook?

A162. (JS, CB, OB, EC) As described in NUREG-1800, the monitored parameters should be directly linked to the degradation mechanism. *See* NUREG-1800 at app A,

§ A.1.2.3.3. In this case, development and swelling of ASR gel produces expansion and cracking in concrete that may eventually cause a structural impact. Hence, expansion is an appropriate monitoring parameter because it is directly linked to the degradation mechanism.

1. In-Plane Expansion

Q163. How does NextEra determine in-plane expansion at Seabrook?

A163. (EC) In-plane expansion is determined using the CCI methodology, which is the same technique used for the measurements performed at FSEL for the LSTP (described in A127). *See* LAR Evaluation § 3.5.1 (INT010)(NP), (NRC089)(P); MPR-4262 § 5.1.1 (NER022).

NextEra has also implemented a second approach for in-plane expansion measurements by measuring the distance between pins that are installed at the corners and intersection points of the grids used for crack width summation. *See* SMPM, ch. 3 § 1.3.1 (NER007). This pin-to-pin measurement method is used for all locations above 0.1% in-plane expansion and selected locations at lesser expansion values. Each measurement is compared to the baseline measurement from when the pins were installed. *See* Final SE at 42 (INT025). This method can determine expansion only since the time the pins were installed. For this approach, Seabrook determines the in-plane strains that occurred prior to pin installation from crack width summation (i.e., crack indexing) at the time the pins are installed. Then, Seabrook adds the measured expansion from the pins to calculate the total in-plane expansion. The pin method has better precision and accuracy than crack width summation.

Q164. How does Seabrook determine where to obtain the CCI measurement?

A164. (EC) The location of the CCI reference grid is established in the area of a room that appears to exhibit the most severe deterioration due to ASR. Accessibility and structure geometry also factor into the decision making process on where to establish the grid. Routine

inspections of ASR-affected areas would identify if another location on the structural member in question exhibited substantially greater ASR progression. In this case, NextEra would establish another CCI grid in the room.

Q165. How is Cracking Index a representative measure of in-plane expansion?

A165. (JS, CB, OB, EC) Expansion of ASR gel produces a tensile stress on the surrounding concrete, which strains the concrete and eventually results in cracking. Therefore, true expansion is the sum of crack widths and engineering strain of the concrete between the cracks integrated over the gauge length.

Engineering strain at the time of crack initiation is equivalent to the tensile strength of the concrete divided by the elastic modulus. The Cracking Index quantifies the extent of the surface cracking by adding the crack widths over a gauge length and dividing by that length. Because concrete has low tensile strength, it has little strain capacity before cracking occurs. Therefore, in ASR-affected concrete, the crack widths comprise most of the expansion. In other words, tensile strains experienced by the un-cracked concrete in between the cracks are considered negligible in relation to deformations that can be attributed to the opening of cracks. Accordingly, Cracking Index provides a reasonable approximation of the total expansion because the engineering strain in the un-cracked concrete between cracks is minimal.

Q166. Was this conclusion evaluated as part of the LSTP?

A166. (JS, CB, OB) Yes. In-plane expansion of the test specimens was measured by two techniques: CCI, and measurements between embedded rods that were used as points of reference. CCI accounts only for crack widths, but the embedded rod measurements would include any strain of the uncracked concrete. The expansion measurement results showed that CCI values initially lagged behind the embedded rods, but agreed closely with the observed in-plane expansion from the embedded rods starting at relatively low expansion levels [*see*

Proprietary Appendix, Figure 4 (NER003)]. This conclusion substantiated the approach of using CCI as a reasonable approximation for in-plane expansion at Seabrook. *See* MPR-4273 § 4.5 (INT019-R)(NP), (INT021)(P). It should be noted that the embedded rods method cannot be used at the plant to determine expansion since the beginning of plant life, because a reference measurement from original construction does not exist (i.e., rods would need to have been installed at original construction to use this approach).

Q167. On what basis does Seabrook consider that the Cracking Index measurements represent in-plane expansion through the depth of the member in question?

A167. (JS, CB, OB, EC) Cracking Index can only provide a direct estimation of expansion on the surface of the concrete member. However, as described in A129, the embedded rod measurements in the LSTP were not affected by the cover concrete and provided a measure of in-plane expansion through the middle of the test specimens. The close agreement between the CCI values and the embedded rod measurements for meaningful in-plane expansion levels provides justification that the CCI methodology is a reasonable methodology for use at Seabrook.

In addition, as summarized in MPR-3727, part of the initial investigation and diagnosis of ASR at Seabrook included testing of three 16-inch partial-depth concrete cores from the interior face of a B Electrical Tunnel wall (24 inches thick). Petrographic examination showed that ASR indications deep within the wall were no greater than samples of the concrete near the exposed interior wall surfaces (i.e., cover). *See* MPR-3727 § 3.1.1 (NER018). Therefore, NextEra has plant data that corroborates the conclusion from the LSTP that CCI is an appropriate measure for in-plane expansion.

2. Through-Thickness Expansion

Q168. How does NextEra determine through-thickness expansion at Seabrook?

A168. (JS, CB, EC) NextEra determines through-thickness expansion by a two-part process that adds the calculated pre-instrument expansion and the measured expansion since the time extensometers were installed. *See* MPR-4153 (INT018-R)(NP), (INT020)(P).

NextEra estimates pre-instrument expansion using an empirical correlation between elastic modulus and through-thickness expansion that was developed as part of the LSTP. Pre-instrument expansion is determined at the time the extensometer is installed, and that calculated value is re-used as the baseline for all subsequent monitoring.

NextEra has installed extensometers in selected concrete structures at Seabrook to measure expansion in the through-thickness direction. Plant personnel obtain measurements from the extensometer at the specified monitoring interval.

Q169. What equipment is used to measure through-thickness expansion?

A169. (EC) SRBEs are used for measuring through-thickness expansion of plant structures. *See* LAR Evaluation § 3.5.1 (INT010)(NP), (NRC089)(P). See A158 for further description. Seabrook uses the same SRBEs that were tested in the LSTP.

Q170. What is the basis for using an extensometer for this parameter?

A170. (JS, CB, OB, EC) The Instrumentation Test Program identified that the SRBE is a reliable instrument that can provide accurate measurements of through-thickness expansion. MPR-4273 § 6.1.3 (INT019-R)(NP), (INT021)(P). NextEra is using the SRBE because it demonstrated satisfactory performance and was superior to the other instruments that were tested.

Q171. How does NextEra determine through-thickness expansion from the time before the extensometer is installed?

A171. (JS, CB, EC) MPR-4153 details the process for determining through-thickness expansion. *See* MPR-4153 at iv (INT018-R)(NP), (INT020)(P). In summary, pre-instrument expansion is determined using the following steps:

- Determine the current elastic modulus of the concrete by material property testing of cores removed from the structure.
- Calculate the reduction in elastic modulus by taking the ratio of the test result from the ASR-affected area to the original elastic modulus. This ratio is known as the "normalized elastic modulus."
- Quantify through-thickness expansion using a correlation developed as part of the LSTP. The correlation relates reduction in elastic modulus with measured expansion from beam specimens used during the LSTP.

Q172. What is the basis for using a correlation with elastic modulus to determine expansion?

A172. (JS, CB, OB) The foundation of the approach for the correlation is the consensus agreement among published sources that elastic modulus decreases with ASR progression. This relationship has been investigated quantitatively by many researchers. The EPRI Evaluation Report compiled literature data from 12 studies to evaluate loss of compressive strength, elastic modulus, and tensile strength as a function of expansion. EPRI concluded "that the modulus of elasticity is the best indicator for ASR progress." EPRI Evaluation Report at 4-1 (NER017). The LSTP also included material property testing, which provided results that are consistent with those of other researchers.

NextEra could have used the literature data to produce a generic correlation between reduction of elastic modulus and expansion that is entirely independent of the LSTP. However, NextEra opted for a more precise relationship that used data from the LSTP, which is more representative of Seabrook. Use of LSTP data has several important advantages:

- All data are from cores removed from reinforced concrete that has a reinforcement configuration that is comparable to Seabrook. Accordingly, the data reflect ASR development in a stress field that was more representative of an actual plant structure than literature, which are typically based on unconfined cylinders.

- The cores were obtained from test specimens that have a concrete mixture design that is as representative of Seabrook as practical.

- The test programs were conducted under a Nuclear Quality Assurance program that satisfies the requirements of 10 C.F.R. Part 50, Appendix B.

MPR-4153 provides the quantitative technical basis for the correlation. Based on the evaluation of the test data, MPR confirmed that elastic modulus data were more sensitive and repeatable than the other parameters monitored in the LSTP (i.e., compressive strength, tensile strength). Analysis of the data determined an expression for a correlation using non-linear least-squares regression. *See* MPR-4153 § 3.2.1 (INT019-R)(P); (INT021)(P). The correlation is presented graphically in Proprietary Appendix, Figure 9 (NER003).

Q173. Was the correlation corroborated with independent data?

A173. (JS, CB) Yes. MPR-4153 includes an evaluation comparing literature data to the correlation from the LSTP. This evaluation confirmed that the trends are comparable and provides reasonable assurance that the correlation can be applied at the plant. *See* MPR-4153 §§ 3.2.2, 3.2.3 (INT019-R)(P); (INT021)(P).

The literature data are from a variety of test specimens, including unconfined test cylinders that have a structural context that is different from the large-scale test specimens from the LSTP. Even with these differences, the data show a trend that is comparable to the correlation. Considering that the structural members at Seabrook have a structural context that is much more similar to the MPR/FSEL test specimens (reinforcement configuration, concrete mixture design, large scale size, etc.), it is reasonable to conclude that the relationship between elastic modulus and through-thickness expansion at the plant will also reflect the correlation.

The EPRI Evaluation Report (NER017) contains a plot of normalized elastic modulus against volumetric expansion from 12 literature studies (two of which overlap with the literature studies used in MPR-4153 ((INT019-R)(P); (INT021)(P)). In preparation for this testimony, we reviewed the EPRI best-fit plot[6] for these data and identified that it agrees well with the MPR-4153 correlation.

Q174. Does NextEra take any additional measures to ensure that application of the correlation is reasonably conservative?

A174. (JS, CB, EC) Yes. A reduction factor is applied to the normalized elastic modulus, which is the input parameter for use of the correlation. This reduction factor causes the estimated through-thickness expansion to be higher than would be determined if the factor were not applied. A higher through-thickness expansion value is conservative, because it reduces the margin to the acceptance criteria derived from the LSTP. Proprietary Appendix, Figure 10 (NER003) shows the correlation with the reduction factor applied and includes a note that gives an example for the conservatism that this approach provides.

For the purpose of determining total through-thickness expansion, NextEra uses the value calculated with the reduction factor on normalized elastic modulus. The total through thickness expansion is the sum of this value and the measured expansion after the extensometer is installed.

Q175. Will NextEra perform any additional measures at Seabrook to corroborate application of the correlation?

A175. (MC, EC) Yes. While the correlation has already been validated by the assessment presented in MPR-4153 ((INT019-R)(P); (INT021)(P)) using literature data, the

[6] EPRI Evaluation Report, fig. 4-1 (NER017).

corroboration study described in the license condition will use in-plant data to check that conclusion.

Q176. Please describe the corroboration study.

A176. (JS, CB, EC) The corroboration study will occur several years after installation of the extensometers to allow time for through-thickness expansion to occur. Fundamentally, the approach for the corroboration study includes four steps: (1) estimate pre-instrument expansion using the correlation when the extensometer is installed to establish a point of reference, (2) monitor through-thickness expansion using the extensometer as specified in the SMP, (3) after several years of monitoring, obtain another core from the same general vicinity and test for elastic modulus to re-determine through-thickness expansion, (4) compare the change in expansion from the original point of reference using the new elastic modulus data and the extensometer data. Successful corroboration would show comparable results using the two methods. At the time of the study, NextEra will obtain new cores from the vicinity of 20% of the extensometers. A detailed presentation of the procedure for the corroboration study is provided in Appendix C of MPR-4273 ((INT019-R)(NP), (INT021)(P)).

3. Volumetric Expansion

Q177. Why is it necessary to calculate volumetric expansion when in-plane expansion and through-thickness expansion are already being monitored?

A177. (JS, CB, OB, EC) ASR-induced expansion is a volumetric effect that can proceed preferentially in directions that are unconfined. At Seabrook, most structures only have confinement in the in-plane directions. While expansion will occur to some extent in all directions, expansion is expected to preferentially reorient in the through-thickness direction because of the lack of reinforcement. The volumetric expansion parameter provides an overall characterization of expansion, regardless of any preference in expansion direction.

Q178. How does NextEra determine volumetric expansion at Seabrook?

A178. (EC) Volumetric expansion is calculated by adding the measured expansion in each of the three directions. *See* MPR-4273, app. B, § 4.3 (INT019-R)(NP), (INT021)(P).

B. <u>Acceptance Criteria</u>

Q179. What is the acceptance criterion for determining whether an extensometer is needed?

A179. (EC) NextEra installs an extensometer when CCI reaches 0.1% (1 mm/m). *See* SMPM, ch. 3 § 1.3.2 (NER007).

Q180. What is the technical basis for this criterion?

A180. (JS, CB, OB, EC) As part of the interim structural evaluation (MPR-3727), MPR reviewed several industry guidelines (e.g., ISE Guideline (NER012); FHWA Guideline (NER013); and ORNL, "In-Service Inspection Guidelines for Concrete Structures in Nuclear Power Plants" (May 2009)) for evaluating concrete structures and identified a tiered approach for categorizing the extent of ASR and screening areas for performing a structural assessment. *See* MPR-3727 § 6.2.1 (NER018).

NextEra subsequently incorporated these tiers into the SMP. Tier 3 (in-plane expansion of 0.1% or more) is the level at which a structural evaluation is required. The SMP also requires that an extensometer be installed to monitor through-thickness expansion in all Tier 3 areas.

Installation of extensometers at an in-plane expansion of 0.1% is supported by the LSTP results. As discussed in A130, the LSTP included an investigation of the expansion behavior of test specimens that closely represented Seabrook. The test results demonstrated that expansion was approximately consistent in all three directions until in-plane expansion reached a value of [*see* Note in Proprietary Appendix, Figure 4 (NER003)]. At this level, expansion reoriented to primarily the through-thickness direction. *See* MPR-4273 § 6.1.1 (INT019-R(NP), (INT021)(P).

Q181. What is the acceptance criterion for in-plane expansion?

A181. (EC) The acceptance criterion for in-plane expansion is [*see* Note 2 in Proprietary Appendix, Table 2 (NER003)]. *See* SMPM, ch. 3 § 1.5 (NER007). It should also be noted that in-plane expansion is a component of volumetric expansion and is therefore inherently included in the acceptance criterion for that parameter.

Q182. What is the technical basis for the in-plane expansion acceptance criterion?

A182. (JS, CB, OB, EC) As discussed in A155, the results from the Anchor Test Program indicate that there is no reduction of anchor capacity in ASR-affected concrete with in-plane expansion levels of below [*see* Proprietary Appendix, Table 3 (NER003)]. In-plane expansion due to ASR creates microcracks parallel to the axis of anchor, which are most pronounced in the concrete cover. These microcracks that open perpendicular to the concrete surface have the potential to provide a preferential failure path within a potential breakout cone, leading to degraded anchor performance. Conversely, through-thickness expansion creates microcracks perpendicular to the axis of an anchor. These potential microcracks that open parallel to the concrete surface do not provide a preferential failure path to result in degraded anchor performance. *See* MPR-4273 § 6.2.1 (INT019-R(NP), (INT021)(P).

Anchor Test Program results confirmed that anchor performance was insensitive to through-thickness expansion of up to about [*see* Proprietary Appendix, Table 2 (NER003)], which is bounded by the acceptance criterion for through-thickness expansion discussed below in A183. Thus, a through-thickness criterion for anchor performance is not necessary.

Q183. What is the acceptance criterion for through-thickness expansion?

A183. (EC) The acceptance criterion for through-thickness expansion is [*see* Proprietary Appendix, Table 3 (NER003)]. *See also* SMPM, ch. 3 § 1.5 (NER007).

Q184. What is the technical basis for the through-thickness expansion criterion?

A184. (JS, CB, OB, EC) Results from the Shear Test Program indicated that there is no reduction of shear capacity in ASR-affected concrete with through-thickness expansion levels up to [*see* Proprietary Appendix, Table 2 (NER003)], which was the maximum expansion level exhibited by the shear test specimens. *See also* MPR-4273 § 6.1.2 (INT019-R(NP), (INT021)(P).

Results from the Reinforcement Anchorage Test Program indicated that there is no reduction in the performance of reinforcement lap splices in ASR-affected concrete with through-thickness expansion levels up to [*see* Proprietary Appendix, Table 2 (NER003)], which was the maximum expansion level exhibited by the reinforcement anchorage test specimens. *See also* MPR-4273 § 6.1.3 (INT019-R(NP), (INT021)(P).

For conservatism, the lesser of the two maximum expansion levels was incorporated as the monitoring threshold.

Q185. What is the acceptance criterion for volumetric expansion?

A185. (EC) The acceptance criterion for volumetric expansion is [*see* Proprietary Appendix, Table 3 (NER003)]. *See also* SMPM, ch. 3 § 1.5 (NER007).

Q186. What is the technical basis for the volumetric expansion criterion?

A186. (JS, CB, OB, EC) The maximum volumetric expansion in the shear test specimens was [*see* Proprietary Appendix, Table 2 (NER003)] (*see also* MPR-4273 § 6.2.2 (INT019-R(NP), (INT021)(P)) and the maximum volumetric expansion in the reinforcement anchorage test specimens was [*see* Proprietary Appendix, Table 2 (NER003)] (*see also* MPR-4273 § 6.1.3 (INT019-R(NP), (INT021)(P)). As discussed above, no degradation of structural performance was identified at these expansion levels for the limit states being investigated.

Using the same logic described for the through-thickness criterion, the lesser of these maximum values was selected as the acceptance criterion.

C. Inspection Intervals

Q187. What are the inspection intervals associated with this monitoring approach?

A187. (EC) Seabrook uses a graded monitoring approach that includes monitoring on an interval that reflects the observed condition. *See* LAR Evaluation § 3.5.1, tbl. 5 (INT010)(NP), (NRC089)(P); *see also* SMPM, ch. 2 § 1.3.1 & ch. 3 at 3-1.13, tbl. 3-1-1 (NER007). For locations with no symptoms of ASR, general walkdowns are performed every 5 or 10 years based on the existing SMP requirements. For locations with ASR symptoms with CCI values below 1.0 mm/m, in-plane expansion is monitored every 2.5 years. For locations with CCI values of 1.0 mm/m or greater, the monitoring interval for in-plane expansion, through-thickness expansion, and volumetric expansion is every 6 months.

Q188. What is the technical basis for these monitoring frequencies?

A188. (JS, CB, OB, EC) As discussed in A158, the purpose of the SMP is to detect changes in structures and prompt corrective action before the loss of structural design function.

The technical basis for the 6-month monitoring frequency was addressed in NextEra's response to NRC RAI-M2, which was included in letter SBK-L-17156, dated October 3, 2017 (NRC013). ASR has been progressing slowly over the decades since original construction. Trending of in-plane and through-thickness expansion at dozens of locations since monitoring started in 2011 continues to show this trend of slow progression. At this point, there is no reason to expect a sudden acceleration of ASR development. Hence, structural implications will not change significantly in a short period of time. For these reasons, a 6-month frequency for the most-affected locations was considered reasonable.

The frequency for general walkdowns for locations that do not exhibit symptoms of ASR is consistent with the existing SMP to perform inspections every 5 years for structures in harsh environments and every 10 years for structures in mild environments. *See* SMPM, ch. 2 § 1.3.1 (NER007). These intervals are based on ACI 349.3R-02, "Evaluation of Existing Nuclear Safety-Related Concrete Structures" (NRC055). Because these locations are not affected by ASR, there was no reason to depart from the existing approach.

For locations with ASR symptoms, but in-plane expansion of below 0.1%, a 2.5-year frequency was selected as a reasonable enhancement to the SMP to increase the inspection frequency. *See* SMPM, ch. 3 § 1.4.1 (NER007).

None of these monitoring frequencies are based on the LSTP conclusions. Because the LSTP used accelerated aging, the LSTP conclusions are not useful for determining a time-based monitoring frequency.

Q189. Does monitoring data at Seabrook support these inspection frequencies?

A189. (EC) Yes. Seabrook has been monitoring in-plane expansion since 2011 and through-thickness expansion since 2016. For both types of measurements, the observed change in expansion at the plant has been small, indicating that the rate of ASR progression is slow. In addition, the margin to the acceptance criteria is very large. *See* MPR Initial Expansion Assessment § 3.5 (NER020). Table 3 below provides the maximum values observed at Seabrook, which can be compared against the limits derived from the LSTP results from Proprietary Appendix, Table 3 (NER003).

Table 3. Comparison of Expansion Data from Seabrook (MPR Initial Expansion Assessment tbls. 3-2, 3-3, and 3-4 (NER020)) to LSTP Limits (as of March 2018)

Parameter	Maximum Value at Seabrook	Acceptance Criterion
In-Plane Expansion	0.25%	[See Proprietary Appendix, Table 3 (NER003)]
Through-Thickness Expansion	0.56%	[See Proprietary Appendix, Table 3 (NER003)]
Volumetric Expansion	0.76%	[See Proprietary Appendix, Table 3 (NER003)]

The data show that the expansion to date over the decades since original construction has only resulted in the worst locations at the plant exhibiting expansion of a fraction of the acceptance criteria with significant margin to the limits. These results justify that the 6-month inspection frequency is very conservative.

Furthermore, NextEra performed walkdowns of all accessible areas of the plant as part of the initial extent of condition investigation and is continuing to perform walkdowns of accessible and inaccessible areas of the plant in accordance with its SMP. Results for these walkdowns have not identified any instances where the walkdown frequency is inadequate.

Q190. How does the rate of expansion affect NextEra's monitoring approach?

A190. (EC) As previously discussed, the approach for the SMP is to compare the monitored parameters–in-plane expansion, through-thickness expansion, and volumetric expansion–against the acceptance criteria. The acceptance criteria do not include rate of expansion, so a definitive rate determination is not necessary.

The only importance of the rate of expansion is that the monitoring interval must be sufficiently frequent that the plant would be able to take action to address the condition prior to the structure being outside of its licensing basis (i.e., exceeding the limit). Based on the observed expansion to date at Seabrook, this criterion is met.

Q191. Does NextEra need to be able to predict long-term ASR expansion?

A191. (JS, CB, OB, EC) No. As discussed in A158, the purpose of the SMP—and any aging management program—is to monitor the aging mechanism so that the plant can take action to address the condition before it continues outside of the licensing basis. The SMP at Seabrook fulfills this function by using a classical aging management approach to monitor parameters to specified acceptance criteria and take action prior to exceeding those criteria.

Q192. Do industry guidelines support the specified monitoring frequencies for ASR-affected concrete?

A192. (JS, CB, OB, EC) Yes. Industry guidelines note that monitoring programs must be tailored to the condition of the structure(s) in question, which is consistent with the tiered monitoring approach in the Seabrook SMP. Industry documents also give some quantitative guidelines for monitoring frequency, as discussed below.

The ISE Guideline indicates that field ASR-affected concrete free expansion rates are typically in the range of 0.05 to 0.2 mm/m per year (i.e., 0.005% to 0.02% per year). *See* ISE Guideline § 10.6 (NER012). Using the maximum value from this range (0.02% per year) and the maximum through-thickness expansion value from Table 3 (0.56%), the [*see* Proprietary Appendix, Table 3 (NER003)] limit would not be reached for many years [*see* Note 3 in Proprietary Appendix, Table 3 (NER003)].

The FHWA Guideline suggests that "bi-yearly (i.e., twice a year) measurements should be taken for the first 3 to 5 years and then every five years if the evolution of the damage is slow or nil." FHWA Guideline § B.6 (NER013). The monitoring frequency of Seabrook's SMP reflects the most frequent timing from this guideline.

Q193. Will NextEra check that the specified monitoring intervals are appropriate?

A193. (EC) Yes. NextEra practice is to review expansion trends with each measurement that is obtained, which will identify any unusual ASR progression that merits additional monitoring. More formally, the license condition to perform periodic expansion assessments includes an activity to evaluate the rate of ASR progression based on the observed expansion data and the margins to the acceptance criteria. In addition, the SMP includes a specific element to review ASR-related operating experience at the plant and from external sources (e.g., other plants, new NRC guidance resulting from the NIST test program) and update the SMP if necessary. *See* SMPM, ch. 1 § 1.6 (NER007). If evidence suggests that the monitoring intervals (or any other aspect of the SMP) at Seabrook are insufficient, the plant will evaluate the need for potential changes.

IX. DISCUSSION OF SPECIFIC CLAIMS IN DR. SAOUMA'S TESTIMONY

Q194. In Section A.3 of his testimony (and in other sections), Dr. Saouma discusses the "Saouma Model" and how the approach using this model could be used for evaluations of ASR affected structures. Were you aware of the "Saouma Model" approach?

A194. (MC, JS, CB, OB, EC) Yes. In fact, Dr. Saouma contacted NextEra directly by letter dated March 4, 2013, offering his consulting services to support evaluation of ASR at Seabrook. As part of the letter Dr. Saouma cited his work, which includes a number of references on numerical modeling. We reviewed these resources as part of considering Dr. Saouma's proposal.

In addition, we routinely check for new published resources pertaining to ASR and we reviewed the 2014 technical paper which Dr. Saouma co-authored, "A Proposed Aging Management Program for Alkali Silica Reactions in a Nuclear Power Plant." This document offers many of the same suggestions as are discussed in Dr. Saouma's testimony.

Q195. Why did NextEra decide not to pursue an approach that uses the "Saouma Model"?

A195. (MC, JS, CB, OB, EC) The "Saouma Model" is one of many chemo-mechanical ASR modeling approaches (also referred to as "constitutive modeling," as noted in the SGH Testimony (NER004)) that are currently being researched in the structural engineering community. Key arguments against use of a chemo-mechanical modeling approach at Seabrook are discussed below.

At its foundation, the objective of chemo-mechanical modeling is to project ASR expansion based on a variety of inputs including the chemical composition of the concrete constituents, environmental factors (e.g., temperature, humidity), specific boundary conditions (e.g., reinforcement), etc. The analyst must devise an approach for correlating the projected expansion to the structural impacts on actual buildings or structural members. Such an approach

requires a set of mathematical models of the ASR chemical reaction, its progression, and each material constituent of the reinforced concrete. Additionally, this approach requires selection of failure criteria in a non-linear finite element analysis platform and modeling of the beneficial effects of confinement. Each of these modeling steps requires a number of assumptions that need to be verified if possible, and validated with measured expansion behavior.

The chemo-mechanical modeling approach departs from the typical aging management program (as described in Appendix A.1 of NUREG-1800), whereby key parameters related to the aging effect in question are periodically measured and compared against acceptance criteria. The typical aging management program approach draws conclusions from measurements, rather than from a modeling prediction, and therefore better represents the plant. Seabrook's LAR methodology is consistent with this principle, in that the inputs to the structural analysis are from measurements of actual structures–not from a calculation or predictive model. In the context of ASR at Seabrook, NextEra viewed that incorporation of a chemo-mechanical model, including the "Saouma Model," into its aging management approach was not necessary. Direct measurement of expansion and trending of the actual expansion data were viewed to be more reliable than prediction of future expansion that would still need to be verified with measured expansion data and adjusted to align with the field measurements.

Furthermore, while extensive research has been performed on ASR modeling techniques by Dr. Saouma and many others, NextEra considered that the technical justification was inadequate for relying on such a model as the cornerstone of an aging management program at a nuclear power plant. No ASR model, including the "Saouma Model," has been adopted by consensus bodies in the concrete industry (e.g., ACI) for use in evaluating structures. Published technical literature is very clear on this point, as discussed below.

- In a 2017 technical paper, Esposito and Hendriks identified *forty* models that have been postulated for modeling ASR development from 1994 to 2017, two of which are credited to Dr. Saouma (one from 2006 and another from 2013). *See* R. Esposito and M.A.N. Hendiricks, "Literature Review of Modelling Approaches for ASR in Concrete: A New Perspective" EUROPEAN JOURNAL OF ENVTL. & CIVIL ENG'G (2017) (NER037). In their review of these modeling techniques, Esposito and Hendricks discuss the features of the various methods and have concluding remarks highlighting the additional development work that would be required to apply these models to actual structures and support structural analyses. *Id*.

- In a 2017 study, Wald (who was being supervised by Dr. Bayrak for this Ph.D. dissertation) developed a new ASR model and compared it against several other chemo-mechanical models (including the 2006 Saouma model).[7] This research identified that the effectiveness of ASR models varied by reinforcement configuration; in other words, during validation against actual test specimens, each model predicted some configurations well and some configurations not well. While this research demonstrated a potential use of ASR modeling, its conclusions highlighted the need for additional development to apply the results.

- Finally, in a 2017 paper published under RILEM Technical Committee 259-ISR,[8] Dr. Saouma himself states that "expansive concrete (finite element) models have not yet been assessed within a formal framework." V. Saouma, et al., "Benchmark Problems for AAR FEA Code Validation" (2017) (NER027). The stated purpose of this work is "to develop such a formal approach for the benefit of the profession." *Id.*

It should be noted that the documents cited above are from 2017, which is *five years after* NextEra was selecting an approach for addressing ASR at Seabrook in 2012. At that time, the state-of-the-art for ASR modeling was less developed than it is today, although the same fundamental concerns that apply today were also applicable in 2012. When NextEra was considering ASR modeling approaches in 2012 (and again in 2013 after receipt of Dr. Saouma's letter offering support), our conclusion was that the use of a modeling approach still would have required an LSTP to demonstrate representativeness of the model. Furthermore, there is not a

---

[7] D. Wald, "ASR Expansion Behavior in Reinforced Concrete –Experimentation and Nuclear Modeling for Practical Application" (Sept. 14, 2017), *available at* https://repositories.lib.utexas.edu/bitstream/handle/2152/61820/WALD-DISSERTATION-2017.pdf

[8] Publicly available at https://www.rilem.net/global/gene/link.php?doc_id=5465&fg=1 (last visited July 23, 2019).

clear path for reconciling an ASR modeling approach with the current licensing basis (ACI-318, ASME Code). Thus, the ASR modeling approach would necessitate a far more extensive LAR than was submitted by NextEra, and NextEra judged that there was significant risk that the NRC would reject this methodology change due to insufficient technical justification.

The SGH testimony contains further discussion on the reasons that NextEra did not adopt a chemo-mechanical modeling approach.

Q196. In Section B.3 of his testimony, Dr. Saouma claims that "in analyzing the safety of existing safety structures, one has to determine the exact nonlinear response beyond the elastic limit." Dr. Saouma goes on to provide Figure 1, which shows how a linear elastic analysis over-estimates capacity. Please comment on this statement within the context of the LSTP.

A196. (JS, CB, OB) We agree that some analysis techniques that employ Code expressions rely on a linear-elastic analysis, and extrapolation of these results is potentially non-conservative. With that stated, we must also recognize that equivalent linear-elastic analysis approaches have been routinely used in structural design in constructing a great majority of the infrastructure in the United States. The type of non-linear load-deflection plot shown in Dr. Saouma's Figure 1 (INT001-R) is characteristic of the results of the LSTP, as shown in the load-deflection plots for the Shear Test Program. However, and as an example, the definition of shear failure as per ACI 318-71 (NRC049) is formation of a diagonal crack, which occurs at the point where the linear-elastic and non-linear plots diverge. As shown in Dr. Saouma's Figure 1, this point is well below the ultimate capacity of the component, which is not credited by the Code. Hence, usage of the Code equations to determine shear capacity remains conservative, because the definition of shear failure–i.e., formation of diagonal cracking–is conservative in comparison to the point at which the structure can no longer perform its design function.

If structural analysis using the Code expressions did not produce an acceptable result, a potential recourse would be to use a more sophisticated method. Dr. Saouma's approach using

non-linear analysis might be suitable for such an application. However, the non-linear analysis would be a complete departure from the ACI and ASME Codes that form the design basis for Seabrook. As previously discussed, during development of the approach for addressing ASR, NextEra concluded that augmenting the existing design basis for Seabrook using conclusions of the LSTP was preferable to abandoning the current licensing basis altogether.

The SGH testimony provides additional details on the analysis methodology used for ASR-affected structures at Seabrook.

Q197. In Section C.2.1 of his testimony, Dr. Saouma claims that "the FSEL testing program did not even meet NextEra's and NRC's own specifications for representativeness of samples with respect to ASR levels or material properties." Is this correct?

A197. (JS, CB, OB) No. We are not aware of any NRC specifications for representativeness, but we can certainly comment on NextEra's specifications. The quote that Dr. Saouma includes in his testimony is from MPR-4273, and summarizes the requirements for representativeness of the test specimens that are included in the Test Specifications for each program. As discussed in A101 of our testimony, those Test Specifications are included in MPR-4262, app. G (NER022) (for the Shear and Reinforcement Anchorage Test Programs), MPR-3722, app. A (NER023) (for the Anchor Test Program), and MPR-4231, app. A (NER021) (for the Instrumentation Test Program).

With regard to material properties, these documents include a specification for 28-day compressive strength, along with many other critical characteristics pertaining to specimen representativeness, including those described in A110 and A115. *See* MPR-4262, app. G, at G-20, tbl. A-1 (NER022). The CGD process is documented in MPR-4247, app. B (NER024) and MPR-4259, app. B (NER025). Furthermore, MPR-4286, Rev. 0, "Supplemental Commercial Grade Dedication Report for Seabrook ASR Test Programs" (Mar. 2016) (FP101003) (NER045)

explicitly confirms that these specifications were met. We note that Dr. Saouma did not include these reports in the list of materials that he reviewed in preparation of his testimony. *See* Saouma Testimony § A.5 (INT001-R).

With regard to ASR levels, the Test Specifications required that the range of ASR expansion overlap and extend beyond the estimated expansion at Seabrook (*see, e.g.,* MPR-4262, app. G at G-16). There were no specific quantitative requirements for ASR levels at which testing would be performed. The test results summarized in MPR-4273, and documented in several other reports clearly indicate that the Test Specification requirement for ASR was satisfied.

Based on the discussion above, Dr. Saouma's statement that the LSTP did not meet NextEra's own specifications is incorrect. We acknowledge Dr. Saouma's statement may be influenced by the standard for representativeness required for using the "Saouma Method," which is his paradigm. However, since NextEra is not using the "Saouma Method," this standard does not apply.

Q198. In Section C.2.1 of his testimony, Dr. Saouma claims that the concrete mixture design of the LSTP specimens was not representative because it was not established that "the aggregate used in the tests were identical to what was used at Seabrook." Please explain why this claim is incorrect.

A198. (JS, CB, OB) See A115 through A122 for discussion in our testimony explaining why the concrete mixture design was sufficiently representative. In summary, the Code equations from the current licensing basis are based on structural testing with a wide variety of specimens with a range of aggregate characteristics. The commercial grade acceptance plan reflecting these parameters is included in report MPR-4259 (Appendix B) (NER025) and the technical basis for these parameters is provided in MPR-3757 (NER026). We note that Dr.

Saouma did not include either of these reports in the list of materials that he reviewed in preparation of his testimony. *See* Saouma Testimony § A.5 (INT001-R).

We also note that aggregate composition is an important input parameter for chemo-mechanical models for ASR projections that are being developed by a variety of researchers. This is reflected in the high priority that Dr. Saouma places on use of "identical" aggregate. For these methods, the level of representativeness required between laboratory test specimens and the actual structure may be more than what was done in the LSTP. However, the LAR for Seabrook does not rely on chemo-mechanical modeling of ASR progression to project a future expansion state. Thus, the standard for what constitutes an acceptable level of representativeness for these modeling methodologies is not applicable.

In addition, use of "identical" aggregate was not possible and not practical for the LSTP. As discussed in A115, use of identical aggregate was not possible because the quarry from which the aggregate was obtained for Seabrook is no longer operating. Even if the quarry were still open, the rock layers that are available today would likely have a different composition than what was accessible several decades ago. Furthermore, as part of planning for the LSTP, FSEL conducted trial batching and reactivity testing of a variety of concrete mixture designs, as described in Section 4.3 of MPR-4262 (NER022). These tests demonstrated that use of non-reactive fine aggregate (like the concrete at Seabrook) would not produce substantial ASR expansion in a reasonable timeframe and therefore would not be useful for the LSTP. We note that Dr. Saouma did not include MPR-4262 in the list of materials that he reviewed in preparation for his testimony. *See* Saouma Testimony § A.5 (INT001-R).

Q199. In Section C.2.1 of his testimony, Dr. Saouma advocates for use of accelerated expansion tests of concrete from Seabrook and from the FSEL test specimens. This criticism of the NextEra approach is repeated throughout Dr. Saouma's testimony. Would such testing be useful?

A199. (MC, JS, CB, OB, EC) No. We acknowledge that the ISE Guideline (NER012) and the FHWA Guideline (NER013) suggest usage of residual reactivity testing. In 2012, NextEra did attempt residual reactivity testing to assess whether the plant was susceptible to future ASR expansion, or if the reaction was exhausted. Testing was performed in accordance with ASTM C 1260, which is a method that is intended to test an aggregate source for potential reactivity before new construction. Because the structures at Seabrook already exist, the aggregate was obtained from cores that were removed from the plant. The aggregate was then used to fabricate a mortar bar and submerged in a hot sodium hydroxide solution to accelerate expansion. Per ASTM C 1260, the aggregate is determined to be reactive if expansion of greater than 0.1% is observed. The test results showed expansion of over 0.7% with no sign of plateauing after 103 days, indicating that Seabrook is susceptible to future expansion. Accordingly, NextEra conservatively assumes that ASR could continue through the remainder of plant life and does not assume any maximum bound on potential expansion. The quantitative results of the test were not useful because the composition and structural context of the mortar bar are vastly different than the plant. No further residual reactivity testing was performed, because there was (and still is) no further application for the results, given the assumption of unbounded potential ASR progression.

Because the NextEra methodology does not rely on a prediction of ASR expansion, information from residual reactivity tests would not be usable with the current approach. NextEra measures, trends, and analyzes actual expansions rather than predicting them. We note that Dr. Saouma's suggested usage of residual reactivity testing was in the context of his ASR

modeling approach, which also predicts the ultimate ASR expansion. If NextEra were using such an approach, then residual reactivity testing might be a useful benchmark.

With respect to the LSTP specimens, reactivity testing was never performed because the information from this testing would not have been useful. The concrete mixture design was known, and was intentionally susceptible to ASR, so there was no need to confirm reactivity. As noted above, the quantitative results are not useful because the structural context of the mortar bar (or the concrete prism for the ASTM C 1293 test) is very different than the LSTP test specimens. Even if the maximum possible expansion of the LSTP test specimens were known, it would not have affected interpretation of the results, which related structural performance to the measured expansion (regardless of the potential future expansion).

Q200. In Section C.2.2.1 of his testimony, Dr. Saouma claims that "a significant problem with the FSEL testing is the failure to ensure that the relative dimensions of the concrete beam that was tested were scaled to the prototype." Were the test specimens scaled to the prototype?

A200. (JS, CB, OB) Yes. As discussed in A85, one of the primary reasons for performing the LSTP was because published test results for selected limit states were from specimens that were too small to be considered representative. We discussed representativeness of specimen dimensions in A103, A110, and A115. No scaling of the test specimen dimensions were required because the beam dimensions (thickness, reinforcing bar size, reinforcing bar spacing, concrete cover over reinforcing bars) were similar or identical to the reference location at the plant–i.e., the B Electrical Tunnel at Seabrook. A detailed comparison of the test specimens to the reference location is included in MPR-3757 (NER026). We note that Dr. Saouma did not include MPR-3757 in the list of materials that he reviewed in preparation for his testimony. *See* Saouma Testimony § A.5 (INT001-R).

Of course, all locations at Seabrook are not identical to the B Electrical Tunnel. As discussed in A107, replication of all locations throughout the plant is not necessary or consistent with the technical basis for the Seabrook design codes, ACI 318 and the ASME Code. However, use of large-scale specimens means that the scaling factor between the test specimens and plant is small for any location.

Figure 2 of Dr. Saouma's testimony (INT001-R) shows a prototype Containment and a scaled down model to illustrate the concept of a representative test specimen for laboratory testing. Dr. Saouma also noted that the location of the reinforcement and diameter of the reinforcement will necessarily be scaled as well. Because the scaling factor between the fabricated LSTP specimens and the B Electrical Tunnel is 1.0 (i.e., no scaling required), proportionate scaling for location of reinforcement and diameter of reinforcement was not necessary. The LSTP specimens used the actual reinforcement bar sizes and the actual reinforcement spacing (except for spacing of the longitudinal reinforcement in the shear specimens, which used additional rebar in the longitudinal direction to ensure a shear failure, as discussed in A115 and in A200 below).

Q201. In Section C.2.2.1 of his testimony, Dr. Saouma identifies a concern with "potential for an erroneous failure mechanism," which would make the load non-representative. How did the FSEL ensure the appropriate failure mechanism during the LSTP?

A201. (JS, CB, OB) During the planning phase of the shear and reinforcement anchorage failure programs, MPR specifically evaluated the potential for the load tests to produce a failure by an unintended mechanism. Section 2 of MPR-3757 (NER026) includes a failure modes and effects analysis of the shear and reinforcement anchorage test specimens. Section 3 of MPR-3757 (NER026) discusses test specimen design details, some of which were tailored to ensure the correct failure mode. For example, use of additional longitudinal

reinforcing bars in the shear test specimens provided additional flexural capacity, and therefore ensured that failure during load testing would be in shear rather than flexure. *See* MPR-3757 § 3.2.3 (NER026). We note that Dr. Saouma did not include MPR-3757 in the list of materials that he reviewed in preparation for his testimony. *See* Saouma Testimony § A.5 (INT001-R).

In addition, FSEL documented failure of the test specimens by the appropriate mode through reporting of test results and photographs. For the shear tests, MPR-4262 includes test results and photographs of a representative test specimen in the main body of the report. *See* MPR-4262 at 6-10 to 6-11, figs. 6-9 & 6-10 (NER022). Photographs for other specimens are contained in multiple locations of MPR-4259. *See, e.g.*, MPR-4259, app. D at D-1745 (NER025). We note that Dr. Saouma did not include MPR-4262 or MPR-4259 in the list of materials that he reviewed in preparation for his testimony. *See* Saouma Testimony § A.5 (INT001-R).

Q202. In Section C.2.2.2 of his testimony, Dr. Saouma criticizes the LSTP for modeling "only the out of plane shear and not the in-plane." Why was this selection appropriate?

A202. (JS, CB, OB) Out-of-plane shear is perpendicular to the plane of a wall (e.g., a force pushing on the wall surface). In-plane shear occurs in the plane of a wall (e.g., a force pushing down from the top of the wall). In the context of Seabrook, out-of-plane shear is not resisted by reinforcement, whereas in-plane shear is. As discussed in the literature review presented in MPR-3727, NextEra demonstrated through review of published literature that one-way shear with reinforcement was not a concern for Seabrook. *See* MPR-3727 tbl. 6-4 (NER018); *see also* State of the Art, tbl. 4 (NER019); Deschenes § 7.2.2 (NRC075). Hence, there was no need to evaluate in-plane shear as part of the LSTP. We note that Dr. Saouma did not include MPR-3727 in the list of materials that he reviewed in preparation of his testimony. *See* Saouma Testimony § A.5 (INT001-R).

Q203. In Section C.2.2.2 of his testimony, Dr. Saouma claims that the "pre-existing axial force [on an actual structure] has a strong influence on the shear response and will substantially negate the prestressing effect." Please comment on this claim.

A203. (JS, CB, OB) The LSTP was designed as a separate effects test, so the structural loading mode naturally focused on the limit state in question. The NextEra analysis methodology does account for axial compression, among all other force effects, as discussed in MPR-4288 ((INT012 (NP), INT014 (P)) and the SEM Document (INT022).

The effect of axial loading due to gravity is another component of confinement. MPR-4273 ((INT019-R)(NP), (INT021)(P)) specifically discusses this fact in the first sentence of Section 2.2. As such, we agree with Dr. Saouma that "the expansion in the vertical direction will be inhibited and redirected in the out of plane one…." Saouma Testimony at 13 (INT001-R). We also agree with the diagram of forces provided by Dr. Saouma in his Figure 3.b. *See id.* Where we disagree is that this axial force will "negate" the prestressing effect. Independent effects of the axial load are addressed on a structure-specific basis through the structural analyses.

The experimental design of the LSTP shear testing and the associated technical basis are discussed in A139 and A140. NextEra did consider axial compression during planning of these tests. The ACI 318 shear design methodology recognizes that axial compression improves the shear strength of reinforced concrete, and conversely, axial tension weakens the shear strength of reinforced concrete. In this context, it is important to recognize two facts: (1) There is no reason to believe that the beneficial effects of axial compression to shear strength would be any different for ASR-affected concrete, particularly in view of the publicly available test data, and (2) restraint provided by the actual structural configurations present at Seabrook introduces axial restraint (i.e., compression) forces that would benefit shear strength, thus making the testing

conservative (because the test setup did not have the benefit of being part of a larger structure that provides restraint). This effect is taken into account by the structural analysis methodology. Accordingly, it would not have been appropriate to also include axial compression forces in the experimental program.

Q204. In Section C.2.3.1 of his testimony, Dr. Saouma questions that the load testing of the shear test specimens actually produced a shear failure, and he suggests that the test results indicate that "clearly, some shear reinforcement is present." Dr. Saouma goes on to criticize the test reports for lack of pictures showing the shear cracks. Please comment on this discussion.

A204. (JS, CB, OB) The shear test specimens did contain stirrups at the ends of the beam specimens to facilitate construction and simulate the continuity of the longitudinal reinforcement in the actual structure (as described in Proprietary Appendix, Table 5 (NER003)). The stirrups do provide shear reinforcement (i.e., transverse reinforcement in the through-thickness direction) in those areas of the beam. However, this shear reinforcement did not affect structural behavior in the shear test area.

Dr. Saouma's suggestion that shear reinforcement affected the shear test results is directly refuted by the design of the test specimens, the design of the test setup, the multitude of inspection records, with corresponding photographs, of the test specimens during fabrication and subsequently being positioned in the test apparatus. As an example, see MPR-4259, Appendix G, inspection record 0326-0062-18-01 for Beam S1, which includes inspector verification that transverse reinforcement was only present within the specified distance of the end of the beam. See MPR-4259, app. G at G-14 (NER025). This inspection record also includes a series of photographs of the rebar cage before concrete was placed, showing that the shear reinforcement is only located at the beam ends. *Id*. at G-18 to G-19. The corresponding test setup inspection record for Beam S1 is contained in special test and inspection record 0326-0062-24-213, *id*. at F-9474, and confirms that the test specimen was appropriately placed such that the shear area was

not affected by the transverse reinforcement. Similar documentation for all other shear test specimens is also contained in MPR-4259.

As discussed in A201, the shear tests did produce the characteristic diagonal shear cracks, which were documented with numerous pictures that are presented in MPR-4262 and MPR-4259. *See, e.g.,* MPR-4262 at 6-10, fig. 6-9 (NER022).

We note that Dr. Saouma did not include MPR-4262 or MPR-4259 in the list of materials that he reviewed in preparation for his testimony. *See* Saouma Testimony § A.5 (INT001-R).

Q205. In Section C.2.3.1 of his testimony, Dr. Saouma includes a Figure 5 that postulates erroneous failure mechanisms. Does Figure 5 accurately represent the shear test setup?

A205. (JS, CB, OB) No. There are a number of errors with Figure 5 that misrepresent the test setup and are in direct conflict with basic structural engineering fundamentals, as follows. Proprietary Appendix, Figure 11 (NER003) illustrates these issues.

- The support for the beam is represented by a small rectangle that is underneath of the portion of the beam with transverse reinforcement (i.e., stirrups). The test setup depicted in Dr. Saouma's testimony would have located shear reinforcement in the high shear area. However, the actual test setup positioned the beam such that the supports were directly below the end of the area with transverse reinforcement.

- The figure indicates that the high shear zone is from the inside edge of the support to an intermediate location on the opposite side of the load (represented by an arrow pointing down above the test specimen). The high shear zone is from the inside edge of the support to the load point. This region is the shear test area from the test.

- The figure suggests that cracking could have occurred on the side of the applied load that is away from the support nearest the load. Not only is this location outside of the high shear area, but the crack is shown as perpendicular to the shear plane between the load and the support on the opposite side of the beam. Such a failure is not physically possible.

Q206. In Section C.2.3.1 of his testimony, Dr. Saouma suggests that the absence of a sharp decrease in the load-displacement plots "is not indicative of a shear failure with minimum (or no reinforcement)." Please comment on Dr. Saouma's conclusion.

A206. (JS, CB, OB) We agree that a difference in the load-deflection response is expected at the point of shear failure. Such behavior was exhibited by all of the test specimens, most in the form of a small decrease followed by a change in slope. In some cases, there was not a decrease in the plot, but there was a clear change in slope. Figure 4 of Dr. Saouma's testimony (INT001-R) shows all of the shear test results in the same diagram, but this behavior is more clearly shown in the individual specimen plots from Appendix E of MPR-4262 (NER022). Closer inspection shows a small decrease in the load-deflection plots for most of the specimens and a clear change in the slope. These indications are consistent with the formation of a diagonal crack, which is consistent with the definition in ACI 318 for a shear failure. It is also important to note that the slope change in the load-deflection plot was confirmed by visual inspection during the testing and documented by photographs, as discussed in A201.

It is also important to note that other design codes (for example AASHTO LRFD [Load and Resistance Factor Design] Bridge Design Specifications) define shear strength of reinforced concrete differently. However, the definition of shear strength in ACI 318-71 (which is the applicable code for Seabrook's licensing basis)—onset of diagonal cracking—is more conservative. Therefore, while the point of specimen "failure" observed in the LSTP meets the definition of "shear failure" from ACI 318, it may not constitute a "shear failure" using the definition of other codes. Using the definitions from other codes, one might conclude that some of the LSTP specimens failed in flexure. This difference also explains why the load-displacement plots for the LSTP do not always reflect the dramatic "*blip*" that Dr. Saouma described in Section C.2.3.1 and Figure 5.b of his testimony (INT001-R). The onset of diagonal

cracking does not necessarily produce such a dramatic "*blip.*" Finally, it is important to recognize the following facts:

- Control specimens for the LSTP Shear Test Program failed in shear using any and all definitions of shear failure.
- ACI 318's definition of shear strength is the lowest (i.e., most conservative) definition of shear failure for the control specimens.
- None of the ASR-affected specimens displayed a lower shear strength than those displayed by the control specimens.
- The statement that ASR-induced damage to the internal microstructure of concrete did not reduce the shear strength of the reinforced concrete specimens of the LSTP is valid for all definitions of shear failure. As a result, ASR did not reduce the shear strength of the LSTP specimens.

Q207. In Section C.2.3.1 of his testimony, Dr. Saouma includes images from shear tests performed under his test programs. How do these test setups compare to testing performed to develop the ACI Code expressions?

A207. (OB) The test setup shown in Figure 6 of Dr. Saouma's testimony (INT001-R) is not used to develop ACI Code expressions for concrete contribution to shear strength in the context of beam shear (i.e., one way shear) strength.

The seminal reports produced by ACI-ASCE Committee 326 (1962) form the basis of shear design approach used in ACI 318-71. The data by this technical committee are from beam tests. In other words, the design methodology in ACI 318-71 for concrete contribution to shear strength is based on beam tests. This is logical since the expression serves to check the "beam shear strength."

Half a century later, ACI-ASCE Committee 445 (the new Committee name/number for ACI-ASCE 326) recently streamlined and simplified the shear design provisions of ACI 318-14. In this effort, the Committee relied exclusively upon beam test results, albeit a more extensive data set than the original. Once again, this is only logical given the intent and application of the "beam shear" design expressions. An examination of the test specimens shown in ACI-ASCE

Committee 326 reports and that employed in the LSTP (see A139) clearly demonstrates the consistency of our approach with that of the relevant ACI technical committees (i.e., ACI-ASCE 326 of 1962 and ACI-ASCE 445 of 2019).

At best, the test specimens and test setup shown Figure 6 of Dr. Saouma's testimony are appropriate to study the aggregate interlock portion of beam shear, which we discussed in A115. However, the concrete contribution to beam shear is made up of several different components: (1) shear carried in the flexural compression zone, (2) the vertical component of force generated due to aggregate interlock, and (3) dowel contribution of the flexural tension reinforcement (see Figure 4 of the Glossary (NER002) for further description). Because the concrete contribution to shear strength is much more than just aggregate interlock, the test setup from Figure 6 of Dr. Saouma's testimony was not suitable for the LSTP application or as a basis for ACI Code expressions.

Q208. In Section C.2.3.2 of his testimony, Dr. Saouma claims that the LSTP specimens are not representative because of the large crack observed on the surface of the specimen. Dr. Saouma states that NextEra did not explain the observed crack in its documentation and he offers his own explanation. Please comment on this discussion.

A208. (JS, CB, OB) Our testimony discusses the large crack in A131 through A134. Contrary to Dr. Saouma's testimony, NextEra included extensive discussion in its documentation on the large crack, the actions taken to evaluate it, and the explanation for its appearance. *See* MPR-4273, § 4.2.3 (INT019-R)(NP), (INT021)(P); *see also* MPR-4262 § 5.2.3 (NER022). As a specific quote from MPR-4273, "along the specimen edges, expansion is concentrated into a large crack; whereas away from the edges, expansion is distributed into finer cracks along the specimen cross section." MPR-4273 at 4-6 (INT019-R)(NP), (INT021)(P). MPR-4273 characterized this crack as an edge effect that is an artifact of using beam specimens, rather than an entire wall. Specifically, MPR-4273 explained that "in an actual structure, a vertical wall

with two-dimensional reinforcement will be confined in the through-thickness direction at its intersection with neighboring members." *Id.* at 4-4. A134 of our testimony elaborated on the explanation in MPR-4273 to state that the large crack only provides more conservatism to the testing and does not challenge its validity.

Dr. Saouma postulates that "Expansion is restrained along the beam in the X and Y axis, but not in the Z axis. Hence ASR volumetric expansion was nearly entirely channeled into the Z direction and unsurprisingly cracked the beam." Saouma Testimony at 16 (INT001-R). Proprietary Appendix, Figure 4 (NER003) illustrates the expansion trends of the beams and shows that after an initial period where expansion proceeds in all directions, the observed expansion reorients in the through-thickness direction (i.e., Z-axis). Thus, we generally agree with Dr. Saouma's statement on expansion direction. However, Dr. Saouma's postulated through-specimen cracking is not consistent with the observations from sectioning of three specimens, each of which demonstrated that the large cracking was an edge effect that was localized to the beam surface. Thus, contrary to Dr. Saouma's testimony, this cracking is quite unlike the delamination crack that occurred at Crystal River. Figure 10 of Dr. Saouma's testimony is categorically not representative of the LSTP specimens. Furthermore, the cracking in Figure 10 runs from one reinforcement bar to the next, whereas the cracking of the LSTP specimens is between the reinforcement mats, even as explained by Dr. Saouma.

It should also be noted that Seabrook has obtained over 100 cores from various structures within the plant as part of extensometer installation and other activities. Inspections of these cores and the boreholes that are left in the structure walls have not identified any delamination cracking like Crystal River or mid-plane cracking.

Q209. In Section C.2.4.1 of his testimony, Dr. Saouma criticizes NextEra and its contractors for "taking a sophomoric approach that confuses material strength with structural strength." Please comment on this discussion.

A209. (MC, JS, CB, OB, EC) Following initial discovery of ASR at Seabrook and laboratory testing of cores that showed significant decreases in the concrete material properties, NextEra justified continued operability of plant structures by explaining the difference between structural strength and material strength. Hence, we are in complete agreement with Dr. Saouma that these are different concepts.

In Section C.2.4.1, Dr. Saouma explains that "concrete shear strength will decrease rather than increase because of ASR (as it is tightly related to the tensile strength widely known to decrease because of ASR)." Saouma Testimony at 17 (INT001-R). Dr. Saouma goes on to explain that "reinforced concrete, on the other hand, will not have a decrease in shear strength because of [the] prestressing effect (restraint provided by the longitudinal reinforcement to crack formation." *Id.* We provided the same explanation in A69 and agree with Dr. Saouma. There is no confusion or disagreement on the difference between material strength and structural strength.

Dr. Saouma's testimony questions how NextEra "extracted relevant information from their test to use in a finite element study." *Id.* at 17. To be clear, none of the data or quantitative results from the LSTP are direct inputs to the structural calculations. As discussed in A90 and A91, the conclusions of the LSTP (i.e., no adverse impact at expansion below a certain level) were used to justify an element of the analysis methodology that the design material properties and Code expressions could still be used to calculate the structural capacity.

Q210. In Section C.3.1.2 of his testimony, Dr. Saouma criticizes use of CCI as a monitoring parameter and highlights the process outlined in the FHWA Guideline. Please comment on this discussion.

A210. (MC, JS, CB, OB, EC) As noted throughout our testimony, NextEra used the FHWA Guideline as a primary reference for developing its strategy. Dr. Saouma cites that

Section 2.2 of the FHWA document "indicates that CCI can only be used in conjunction with petrography for Level 2 [Preliminary Investigation]" (Saouma Testimony at 20 (INT001-R)), but this is a misleading interpretation that actually contradicts the content elsewhere in the FHWA Guideline. Section 5.0 of the FHWA Guideline discusses Level 3 (Detailed Studies for Diagnosis/Prognosis of ASR). The Cracking Index method is explicitly endorsed in Section 5.2.1 and Section 5.2.2 "to generate a quantitative assessment of the extent (severity) of deterioration." FHWA Guideline §§ 5.2.1 & 5.2.2. (NER013). The FHWA Guideline offers a number of other methods, but does not state that these methods must be used in combination.

With regard to linking CCI with petrography, the FHWA Guideline discusses use of the Damage Rating Index (DRI) method and warns that "as the results are very much related to the experience of the petrographer and since there is currently no standard test procedure available, the method is fairly subjective and the results can be quite variable from one operator to another." FHWA Guideline § 5.3.2 (NER013). This is the same rationale provided by NextEra in MPR-4273, based on petrographic examination results from the LSTP. NextEra judged that this limitation made petrographic examination non-suitable for a monitoring parameter.

Q211. In Section C.3.1.2 of his testimony, Dr. Saouma identifies Dr. Kevin Folliard of the University of Texas at Austin as an author of the FHWA Guideline, and subsequently, in Section C.9 of his testimony, criticizes that "…there was no in-house expertise on ASR, though an internationally renowned expert (Prof. Foilliard [sic]) is at the same institution." Was expert support from Dr. Folliard sought on interpreting the guidance from the FHWA document?

A211. (JS, CB) Yes. During development of the strategy to address ASR, we met with Dr. Kevin Folliard in October 2011 and again in January 2012, and had a conference call with him in between the two meetings (November 2011). The January 2012 meeting specifically included discussion of the techniques described in the FHWA Guideline. As part of that discussion, Dr. Folliard acknowledged the limitations of the FHWA Guideline for assessing

structural performance for reinforced concrete structures, and stated that Dr. Bayrak would be better for addressing the structural implications of ASR. We discussed several of the recommended actions from the FHWA document with Dr. Folliard including the Appendix I methodology for projecting expansion, residual aggregate reactivity testing, stiffness damage testing, and other non-destructive testing methods such as impact echo. In summary, the information provided by Dr. Folliard indicated that these methods were not suitable for the type of quantitative monitoring required for aging management of Seabrook's reinforced concrete structures. Dr. Folliard considered that crack width measurement would be a useful technique for Seabrook given the scope of the structures to be monitored.

Q212. In Section C.3.1.2 of his testimony, Dr. Saouma raises concerns about use of crack width monitoring on the surface because of the potential that expansion could be greater within the specimen. Please comment on this discussion.

A212. (JS, CB, OB, EC) As discussed in A166, the LSTP investigated whether CCI was a representative measure of in-plane measurement by using through-thickness pins to provide an independent measurement. As shown in Proprietary Appendix, Figure 4 (NER003), agreement between these two methods demonstrated the reliability of CCI. Furthermore, as discussed in A167, NextEra specifically investigated whether there was a gradient in ASR progression through the depth of the wall by taking cores and performing petrographic examinations. These results confirmed that CCI is an appropriate parameter, especially at higher levels of ASR-induced expansion where structural integrity is more of a concern. Additionally, while NextEra has installed extensometers in 38 locations to date because they have in-plane expansion greater than 0.1%, extensometers were also installed in 10 additional locations with lesser ASR-induced expansion measured by CCI. Cores tested from these locations indicated that total expansion was low, and subsequent monitoring with an extensometer has not approached the expansion

limits. *See* MPR Initial Expansion Assessment (NER020). Thus, Dr. Saouma's concern has been satisfactorily addressed by data obtained from both the LSTP and at Seabrook.

Q213. In Section C.3.2 of his testimony, Dr. Saouma suggests that extensometers be installed at least at mid-distance between the intrados and extrados. What is the practice at Seabrook?

A213. (EC) This comment is presumably from the context of the Containment Building, which is cylindrical and therefore has an intrados (inside radius) and extrados (outside radius). There are no extensometers installed in the Containment Building, because it does not have any Tier 3 locations (i.e., expansion of 0.1% or more). However, the principle is still valid for rectangular structures where extensometers are currently installed. Dr. Saouma's suggestion aligns with the instructions in Seabrook's procedures, which specify that the borehole for installing the extensometer shall be drilled to within approximately 3 inches of the far side of the structural member and the deep anchor is installed at the end of the borehole. *See* Seabrook Mechanical Maintenance Procedure MS0517.51, "Installation of Geokon Snap-Ring Borehole Extensometers," Rev. 0, figs. 1-7 (Feb. 2016) (NER046). Considering that the thinnest structural member to be monitored is 18 inches in thickness, this approach places the deep anchor for each extensometer well beyond the midpoint of the wall thickness.

Q214. In Section C.3.2 of his testimony, Dr. Saouma suggests that internal relative humidity be measured as a monitoring parameter. Would this measurement be useful?

A214. (JS, CB, OB) No. As noted throughout Dr. Saouma's testimony, the relative humidity must be sufficiently high for ASR to occur. As discussed in Section 5.2.5 of the FHWA Guideline, "humidity and temperature readings can provide useful information in the treatment…and interpretation of expansion and crack measurements." FHWA Guideline at 24 (NER013). However, NextEra's SMP assumes that ASR exists in all plant structures, so there is not generally a need for interpreting whether expansion and crack measurements are from ASR

or another mechanism. Seabrook conservatively assumes that all cracks are from ASR unless a specific technical evaluation (e.g., with a petrographic examination) demonstrates otherwise. Accordingly, it is not necessary to include humidity as a general monitoring parameter.

We note that the FHWA Guideline also includes a parameter for humidity as part of the methodology for estimating the potential for future expansion of ASR-affected concrete in Appendix I. Dr. Saouma's testimony focuses on the need for understanding the potential for future expansion, which would make obtaining humidity measurements more important. However, as we have discussed throughout our testimony, the ASR monitoring methodology at Seabrook does not rely on such projections for long-term, or even medium-term expansion. As discussed in A193, the only need for understanding rate of expansion at Seabrook is validation that the monitoring frequency is sufficient, and NextEra is using in-situ monitoring for this purpose.

Q215. In Section C.3.2 of his testimony, Dr. Saouma suggests that concrete should be tested for free chloride concentration. Is this measurement relevant for ASR monitoring?

A215. (MC, EC) No. Chloride is not an alkali metal and does not participate in the ASR chemical reaction. Accordingly, chloride concentration in concrete is not addressed as part of the ASR monitoring provisions in the SMP.

The presence of chloride can ultimately cause corrosion of rebar, which is degradation mechanism that is covered separately by the SMP. Seabrook monitors chloride (among other species) in the groundwater as part of its SMP. *See* SMPM, ch. 6 § 1.3 (NER007). This action is consistent with NRC guidelines in the GALL report and with other plants, who also have cracked, reinforced concrete structures (albeit for reasons other than ASR).

Q216. In item 1 of Section C.4 of his testimony, Dr. Saouma states that "because of the very different concrete mix, one cannot rely on FSEL data to quantitatively and properly interpret field measurements at Seabrook." Please comment on this statement.

A216. (JS, CB, OB) We disagree with Dr. Saouma on this point for the reasons discussed throughout our testimony, and particularly in A115 through A122, which focus on the concrete mixture design. In summary, the concrete used in the LSTP was sufficiently representative for the purpose of the test program (i.e., assessing structural performance) and how the conclusions are used at Seabrook. MPR identified critical characteristics for the concrete, provided a thorough technical basis for those characteristics, and performed CGD to validate that the test specimens conformed to those characteristics.

We note that the context for this comment appears to come from the perspective of the "Saouma Model" where quantitative data from the test program would be necessary inputs. For the Seabrook approach, the LSTP conclusions are used to justify an element of the analysis methodology that the design material properties and Code expressions could still be used. Specific data from the test program are not used as inputs to the structural analyses or to "interpret field measurements at Seabrook."

Q217. In item 2 of Section C.4 of his testimony, Dr. Saouma states that "The CCI method developed in the laboratory under the special environmental condition of high humidity is not applicable at Seabrook…" because at "Seabrook, the concrete has dried on the surface and there will be very little cracking as a result of ASR." Please comment on this statement.

A217. (MC, JS, CB, OB, EC) We disagree with Dr. Saouma on this point for the reasons discussed throughout our testimony. Use of the Cracking Index method in the LSTP was described in A127-A128, environmental conditioning was described in A123-A125, and use of Cracking Index at Seabrook was discussed in A163-A167.

In summary, use of the Cracking Index method has been demonstrated to be reliable both during the LSTP and at Seabrook Station. We should also note that the Cracking Index methodology was not "developed in the laboratory" as stated by Dr. Saouma. Saouma Testimony at 31 (INT001-R). As Dr. Saouma himself noted, the Cracking Index methodology is explicitly referenced by the FHWA Guideline. The crack width summation approach is also endorsed by other industry references (e.g., the ISE Guideline).

With regard to drying of concrete at Seabrook, NextEra has performed petrographic examinations to evaluate differences in ASR through the depth of concrete members. None of these evaluations have suggested the type of ASR gradient suggested by Dr. Saouma due to a humidity gradient. As an example, petrographic examination was performed on three cores from the B Electrical Tunnel. *See* SGH Report 110594-RPT-02, Rev. 1, "Damage Rating Index & ASR Rating" (Feb. 10, 2012) (FP100702) (NER028). For each core, examinations were performed on a sample from near the surface and from approximately the midpoint of the wall. *Id*. The petrographer observed that ASR indications from deep within the wall were no greater than at the surface. *Id*. Additionally, the petrographer concluded that "the moisture levels are high enough to support ASR through the whole thickness of the concrete wall." *Id*. at 5.

Q218. In item 3 of Section C.4 of his testimony, Dr. Saouma states that "NextEra has prematurely ruled out the applicability of petrographic DRI." Is this true?

A218. (MC, JS, CB, EC) No. The LSTP specifically investigated Damage Rating Index (DRI) and another similar method called Visual Assessment Rating (VAR), and concluded that expansion monitoring was preferable. Both of these methods rely on tabulating visual observations to quantify the extent of ASR distress. *See* MPR-4273 § 4.4 (INT019-R)(NP), (INT021)(P).

As discussed in A98, cores were obtained from LSTP test specimens for petrographic examination to assess the general condition of the concrete and confirm the presence of ASR. The petrographer also determined the degree of ASR present in the core samples using the DRI and VAR methods. This aspect of the LSTP provided information to support evaluating the potential for DRI or VAR to be used at Seabrook in lieu of expansion measurements to track ASR progression as part of the SMP.

As expected, the DRI and VAR values both increased with cores from specimens with higher measured expansion. *See id.* However, the scatter in the data for DRI and VAR increased at higher levels of ASR-related expansion. Interpretation of petrographic examination results depends on petrographer judgment, which is less repeatable than purely quantitative measurements. This may explain the increased data scatter observed in the DRI and VAR results at higher expansion levels. Another disadvantage of monitoring by petrography is the need to obtain a core for each measurement which is effort-intensive and destructive to the existing concrete structure, particularly if conducted as part of a long-term monitoring program. As discussed in the FHWA Guideline, pertaining to use of petrography for quantitative assessment, "the results are very much related to the experience of the petrographer and since there is currently no standard test procedure available, the method is fairly subjective and the results can be quite variable from one operator to another." FHWA Guideline at 25 (NER013). Echoing this position, the EPRI Evaluation Report concluded that the DRI method "is not recommended because of its subjectivity and poor reliability." EPRI Evaluation Report, tbl. 2-11 (NER017). These discussions are consistent with NextEra's rationale for concluding that monitoring by expansion measurements was preferable to monitoring by petrography.

With respect to DRI, Dr. Saouma's testimony provides a "caution that this is a delicate test that should only be performed by a very qualified petrographer, and should be performed repeatedly by the same one." Saouma Testimony at 31 (INT001-R). As discussed above, we agree with this hazard of the DRI method and the subjectivity of the method (which is the reason for using the same petrographer).

It should be noted that NextEra has used DRI as part of petrographic examinations at Seabrook in the past, as documented in DRI & ASR Rating (NER028). Ultimately, NextEra decided not to use this approach as a correlating parameter for the reasons discussed above.

Q219. In item 4 of Section C.4 of his testimony, Dr. Saouma states that the FSEL "results cannot be used by any finite element code to gauge the safety of the structure (as they have been used by SG&H)." Please comment on this statement.

A219. (MC, JS, CB, OB, EC) No data from the LSTP are used as an input to the ANSYS Code that is used for structural evaluations at Seabrook. As discussed in several portions of our testimony (e.g., A90 and A91), the LSTP conclusions are used to justify an element of the analysis methodology that the design material properties and Code expressions could still be used. The analysis methodology for ASR-affected structures is discussed further in the SGH testimony.

Q220. In Section C.5 of his testimony, Dr. Saouma identifies "three critical questions" for an investigation of the structural impacts of ASR–how much time until the reaction stops, what would be the maximum expansion, and how that expansion would affect the safety of the structure. Please comment on this approach.

A220. (MC, JS, CB, OB, EC) None of these questions are relevant for the NextEra method because we are not relying on a prediction of ASR expansion beyond justification of the 6-month monitoring interval. The amount of time until the reaction stops will vary throughout the plant, and even within the same structural member. The same will be true for the maximum

expansion. Furthermore, neither of these parameters are relevant for evaluating the present condition of the structure. The Seabrook approach conservatively assumes that (1) ASR will continue for the remainder of plant life, and (2) there is not a maximum bound on how much expansion could occur. These conservative assumptions render irrelevant the questions highlighted by Dr. Saouma. We note that NextEra's approach of monitoring key parameters, trending those measurements, and comparing them against specified acceptance criteria is consistent with the classic aging management approach endorsed by the NRC.

Q221. In Section C.7 of his testimony, Dr. Saouma refers to other circumstances that have used an approach that is comparable to what he suggests. Please comment on how this experience pertains to Seabrook.

A221. (JS, CB, OB, EC) While some selected features of dams may be reinforced, the overwhelming majority of those structures are not reinforced. Accordingly, ASR can have a much greater impact due to the lack of embedded reinforcement for most of the structure. Additionally, dams are massive concrete structures that contain orders of magnitude more concrete material than structures at a nuclear power plant. Therefore, general expansion of a relatively modest percentage can have a significant displacement effect over the extremely large dimensions of the dam structure. On the matter of representativeness, experience from a dam is generally not adequate to justify application to a reinforced concrete structure at a nuclear power plant.

During development of the approach for addressing ASR at Seabrook, NextEra investigated the experience at the Gentilly-2 plant in Canada. The approach is now described in EPRI Report 3002013190, "Modeling Concrete Structures Affected by Alkali-Silica Reaction: Hydro-Quebec Approach for Hydraulic and Nuclear Power Plants" (Oct. 2018) ("Hydro-Quebec Report") (NER029) among other references. As described in the Hydro-Quebec Report, the Gentilly-2 methodology relies on "elaborate numerical procedures" that are "characterized by the

implementation of some specially developed subroutines that account for complex constitutive relations." Hydro-Quebec Report at 11-1 (NER029). For validation of the model to apply to the Gentilly-2 Reactor Building, Hydro-Quebec compared results from the numerical analysis to deformation/strain data obtained from 26 years of monitoring the 139 instruments that were placed during casting of the Reactor Building. *See id* at 8-3. None of the structures at Seabrook were constructed with such monitoring, so verification and validation of the model in the manner used for Gentilly-2 is not possible. It should also be noted that Gentilly-2 never entered its license renewal period, because it was shut down (for reasons other than ASR), so the actual experience that can be leveraged from Gentilly-2 is limited.

During development of the approach for addressing ASR at Seabrook, NextEra also investigated the experience at the Ikata nuclear plant in Japan. The approach is now described in a technical paper by Manabe et al, "Maintenance Management of Turbine Generator Foundation Affected by Alkali-Silica Reaction" (2016) ("Ikata Report"). In this case, the ASR impact was limited to functionality of a turbine-generator component, which became misaligned due to deformation of the concrete supports. The ASR symptoms were first diagnosed in 1979, at which point additional monitoring was implemented. The Ikata Report discussed that residual compressive strength of the ASR-affected concrete remained in excess of its design strength and also discussed a structural evaluation in 1988 that yielded acceptable results. Monitoring data showed that expansion stopped around 1991. Subsequent structural analyses also used the as-found material properties of the concrete, and validated structural adequacy on this basis. *See* Ikata Report § 3.2. As discussed in A199, there is no indication that ASR has been exhausted at Seabrook, and NextEra is conservatively assuming that ASR will continue indefinitely. Direct usage of the observed reductions in material properties may not produce passable structural

evaluation results, which was the impetus for investigating the effect of confinement on selected limits states in the LSTP.

Q222. In Section C.8 of his testimony, Dr. Saouma offers a number of techniques for monitoring ASR-affected structures in lieu of CCI. Why were these techniques not used by NextEra?

A222. (MC, JS, CB, OB, EC) NextEra did investigate advanced techniques for monitoring ASR progression, but concluded that the CCI and extensometer methods were ultimately more reliable. As an example, during the LSTP, FSEL obtained equipment for performing the impact echo methodology, which is one of the techniques identified by Dr. Saouma. This exploratory effort demonstrated unreliable and non-repeatable results on the test specimens, which is a conclusion that is consistent with the "POC" (Proof-of-Concept) status identified by Dr. Saouma and the "C" rating for accuracy of ASR diagnosis.

We note that all of the other methods identified by Dr. Saouma are similarly developmental, with a designation of either "POC" or "PAT" ("Potentially Applicable Technique for monitoring ASR-relevant parameters, but not performed with success yet at the structural level in the field"). The only "technique" listed by Dr. Saouma with an A rating for accuracy is actually a group of techniques with a "PAT" designation that is characterized as "Promising techniques with high resolution and high sensitivity." Additional development work appears to be required to support deployment of any of these methods in a nuclear power plant.

We note that a 2012 study by Giannini, "Evaluation of Concrete Structures Affected by Alkali-Silica Reaction and Delayed Ettringite Formation" (2012) ("Giannini Dissertation") (NER030), reviewed several advanced techniques for assessing ASR, including impact echo, ultrasonic pulse velocity, stiffness damage testing, and others. (This study was Giannini's dissertation at the University of Texas at Austin for which Dr. Folliard was the supervisor and Dr. Bayrak was a reviewer). Giannini identified shortcomings for all of these advanced

techniques that required further development. As an example, for ultrasonic pulse velocity and impact echo, Giannini concluded that for expansions above 0.1%, "the effectiveness of these NDT methods is greatly reduced, and if applied according to the existing FHWA evaluation protocol, they will be unable to detect significant changes in the structure." Giannini Dissertation at 280. NextEra's conclusion that these advanced methods were not ready or suitable for use at Seabrook is consistent with the results of Giannini's study.

Q223. In Section C.9 of his testimony, Dr. Saouma criticizes NextEra and the NRC for lack of independent peer review. Was the LAR methodology peer reviewed?

A223. (MC, EC) Yes. As discussed in A86 and A88, the approach for the LSTP was reviewed by EPRI and usage of the conclusions in the LAR methodology was reviewed by Dr. Bruce Ellingwood from Colorado State University. From a licensing perspective, the LAR methodology was also reviewed by Talisman International.

These reviews are in addition to the internal reviews performed by NextEra, MPR, and SGH on the LAR methodology and the technical review performed by NRC Staff. We note that the NRC obtained subject matter expertise review from Brookhaven National Laboratory.

X. DISCUSSION OF SELECTED CLAIMS FROM ORIGINAL PETITION

Q224. C-10's initial petition, as cited by the ASLB admissibility decision, questioned how the test specimens were representative of areas at Seabrook that have been submerged at their footings with water of high salt content. How can the LSTP results be applied in this circumstance?

A224. (JS, CB, OB) The presence of water and additional alkali material are factors that accelerate ASR development. We note that the ground water at Seabrook is fresh, but can contain additional alkali material.

As discussed in A123, the test specimens were exposed to wet/dry cycling in the ECF and the concrete mixture design included a chemical admixture, which provided an additional source of alkali material. While these measures are comparable to the conditions postulated in this question, it was not feasible or necessary to represent the field conditions as part of the LSTP. The LSTP approach does not rely on the rate of ASR development as a parameter to correlate results to Seabrook.

Q225. What have inspections at Seabrook of inaccessible areas shown about ASR progression?

A225. (EC) Consistent with industry best practices, NextEra conducts opportunistic inspections of below grade areas and other locations that are normally below the water table or are otherwise submerged. Several inaccessible areas have been inspected and results have confirmed instances where ASR is present. However, the levels of ASR observed were consistent with that observed in accessible areas of the plant. Typical inaccessible areas inspected include underground electrical manholes, transformer foundations, transformer containment structures, and underground pipe access vaults.

Q226. C-10's initial petition, as cited by the ASLB ruling on admission of the contention, mentioned an explanation that densification of the concrete could have been the mechanism for the mitigation of structural impact in the shear tests. Do you agree?

A226. (JS, CB, OB) No. "Densification" is a term that can be used with concrete degradation mechanisms from chemical reactions where the reaction product (gel, in the case of ASR) fills up the pores within the concrete matrix and could result in an increase in compressive strength. If structural testing were performed at this early stage of ASR development, the increase in compressive strength from "densification" could produce some benefit in structural performance. But as explained in A141, MPR and FSEL concluded that the observed structural performance was due to the chemical prestressing effect, which is consistent with the conclusions of other test programs investigating the impacts of ASR. Section C.2.4.1 of Dr. Saouma's testimony (INT001-R) offers the same explanation and does not continue to discuss densification.

For the LSTP, FSEL obtained cores from the specimens at the time of load testing. Material property testing of the cores demonstrated a loss of compressive strength that is commensurate with ASR expansion. *See* MPR-4273, fig. 4-5 (INT019-R)(NP), (INT021)(P). Because the compressive strength of the test specimen was less than the compressive strength at the time of original fabrication, the densification mechanism could not be the reason for the observed favorable performance.

Q227. C-10's initial position, as cited by the ASLB ruling on admission of the contention, suggested that crack length should also be monitored. Would this parameter provide additional value for monitoring?

A227. (JS, CB, OB) No. Crack length does not provide information that can be used to readily quantify expansion. There are no industry-accepted methods that use crack length monitoring for this purpose. Further, length does not correlate with the relative expansion in any

given direction. It is noted that Dr. Saouma's testimony does not continue to offer this suggestion.

Q228. C-10's initial petition, as cited by the ASLB ruling on admission of contention, states that extensometers may miss localized ASR damage. How does the NextEra approach preclude missing ASR damage that would result in a structural impact?

A228. (JS, CB, OB, EC) Extensometers are installed in the vicinity of the location on a structural member where symptoms of ASR appear the most advanced (e.g., greatest map cracking). Measurements from the extensometer are applied to the entire wall, even though the symptoms of ASR are less in other areas. If another portion of the structural member exhibited significantly different ASR symptoms, NextEra would begin monitoring in the new location.

Local ASR expansion that is slightly greater than that measured by the extensometer would not have a significant structural impact. The consideration of importance is the bulk condition of the structural member, and the assumption that the measured expansion from the location with the greatest ASR symptoms applies over the entire wall ensures a conservative treatment. Using shear strength as an example, contributions of all "local regions" within a cross-section are accounted for in an averaged sense, and local variations of shear carried in a particular region of the member is not a factor in the ACI 318-71 approach for calculating shear strength.

Q229. C-10's initial petition, as cited in the ASLB ruling on admission of the contention, discussed that serious degradation may go unnoticed without employing thorough petrographic analysis. Are petrographic examinations a necessary aspect of the ongoing monitoring program to prevent missing ASR damage that could have a structural impact?

A229. (JS, CB, OB, EC) No. Initially, petrographic examinations are necessary to diagnose the presence of ASR. Thereafter, follow-up petrography is not necessary using NextEra's approach. Consistent with concrete industry guidance, monitoring for ASR

progression at Seabrook is performed by expansion monitoring. Applicability of the industry guidance on this monitoring approach was demonstrated on representative test specimens during the LSTP and has now been verified by implementation of the SMP at Seabrook.

As discussed in A130, the test specimens initially exhibited expansion in all directions. After expansion of approximately [*see* Proprietary Appendix, Figure 4 (NER003)] in each direction, the observed expansion reoriented to primarily the through-thickness direction. Expansion reorientation in the through-thickness direction does not occur until sufficient in-plane expansion has produced chemical prestressing with the reinforcing bars. Therefore, cracking in the through-thickness direction would not occur without any symptoms of expansion in the in-plane directions. For this reason, use of the presence of pattern cracking as a basis for identifying locations that are potentially affected by ASR is appropriate.

Furthermore, there is considerable margin to structural impact beyond the screening criterion, which accounts for the normal variability expected among concrete members. As discussed in A179, Seabrook uses a measurement of 0.1% in-plane expansion as the criterion for installing an extensometer. Even if through-thickness expansion exceeded in-plane expansion– e.g., if through-thickness expansion were 0.2% when in-plane expansion reached 0.1% - the margin to the through-thickness limit of [*see* Proprietary Appendix, Table 3 (NER003)] is still large. In addition, the testing at the maximum expansion levels observed in the test specimens [*see* Proprietary Appendix, Table 2 (NER003)] still did not identify an adverse impact on structural capacity, so there is additional margin beyond the acceptance criteria in the SMP [*see* Proprietary Appendix, Table 3 (NER003)].

Implementation of the SMP supports that the in-plane expansion screening criterion has satisfactorily identified concrete members with ASR progression. The MPR Initial Expansion

Assessment (NER020), reviewed all 38 locations where an extensometer had been installed because CCI exceeded 0.1%. The maximum through-thickness expansion in these locations is not close to the acceptance criterion (see A189).

Q230. C-10's initial position, as cited in the ASLB ruling on admission of the contention, discussed the "autocatalytic" nature of ASR to accelerate over time. Would the cracks caused by ASR promote further ASR progression?

A230. (JS, CB, OB) Potentially yes. As discussed in A73, the rate of ASR progression can be influenced by the presence of the chemical reactants involved in the reaction and the presence of water. Therefore, the opening of cracks as a result of ASR could allow more water into the concrete, potentially carrying alkali constituents.

Q231. Does the autocatalytic nature of ASR challenge representativeness of the LSTP specimens?

A231. (JS, CB, OB) No. The rate of ASR progression was not a parameter intended to be represented by the LSTP. In fact, the LSTP intentionally accelerated ASR development, so the rate of ASR progression in the test specimens is deliberately non-representative. Furthermore, the acceptance criteria for the SMP (described in Section VIII.B) are associated with specific expansion levels and do not depend on rate of ASR progression.

Although the rate of ASR progression is not intended to be representative, wetting of the specimens in the ECF and use of a chemical admixture to provide additional alkali simulate the potential for intrusion of water with salinity.

Q232. C-10's initial petition, as cited in the ASLB ruling on admission of the contention, identifies effects of heat as affecting ASR development. Does high heat affect development of ASR?

A232. (JS, CB, OB, EC) Yes. As discussed in A73, elevated temperatures promote ASR development.

Q233. Does acceleration of ASR by high heat challenge representativeness of the LSTP specimens or undermine the NextEra monitoring program?

A233. (JS, CB, OB, EC) No. The rate of ASR progression was not a parameter intended to be represented by the LSTP. In fact, the LSTP intentionally accelerated ASR development, so the rate of ASR progression in the test specimens is deliberately non-representative. The acceptance criteria described in the SMP (Section VIII.B of our testimony) are associated with specific expansion levels and do not depend on rate of ASR progression.

Although the rate of ASR progression in the LSTP specimens was not intended to be representative, it should be noted that most seismic Category I structures at Seabrook that are within the scope of the SMP are not subjected to high temperatures. In most cases, the maximum temperature inside the ECF at FSEL was higher than the temperatures that are observed at the plant. For the few cases where structures are exposed to higher temperatures, the actions prescribed in the SMP are satisfactory for monitoring any potential expansion. Areas of potential concern due to high heat (e.g., the bioshield, which is a concrete structure immediately surrounding the reactor vessel) are currently being monitored and there is no evidence of accelerated expansion (as discussed in A235).

We note that Dr. Saouma's testimony does not address this point on exposure of ASR-affected concrete at Seabrook to high heat.

Q234. C-10's initial petition, as cited by the ASLB ruling on admission of the contention, identifies effects of radiation as affecting ASR development. Does high radiation affect development of ASR?

A234. (JS, CB, OB) Yes. Silica-containing aggregates are more susceptible to ASR expansion if they have an amorphous crystalline structures. Radiation can cause disruption of the organization of the crystalline structure of an aggregate making it more amorphous and

therefore more susceptible to ASR expansion. In this manner, radiation could accelerate ASR progression.

Q235. Does acceleration of ASR by high radiation challenge representativeness of the LSTP specimens or undermine the NextEra monitoring program?

A235. (JS, CB, OB, EC) No. This effect is not relevant for the SMP. Most concrete at Seabrook is subjected to radiation dose levels that are far below the amount required to degrade the concrete and possibly affect ASR progression. The concrete structures that can be affected by irradiation are those in close proximity to the reactor vessel, such as the bioshield, which surrounds the reactor and whose function is to absorb radiation generated from within the reactor. The bioshield and other concrete features within Containment that are in close proximity to the reactor are part of the SMP. Inspection of the bioshield and other containment internals identified no evidence of ASR. The general observation at Seabrook is that ASR manifests primarily in below grade surfaces susceptible to water intrusion and exterior surfaces of buildings that are exposed to weather. Containment internal structures are not directly exposed to water, so the absence of ASR symptoms is not surprising. Based on the inspection results and comparison to other locations, manifestation of ASR at Seabrook is not sensitive to radiation levels.

Even if the radiation did have an impact on the rate of ASR, it would not affect the SMP or the relevance of the test data. As discussed in A116, the rate of ASR progression was not a parameter intended to be represented by the LSTP. In fact, the LSTP intentionally accelerated ASR development, so the rate of ASR progression in the test specimens is deliberately non-representative. The acceptance criteria described in the SMP (and in Section VIII.B of our testimony) are associated with specific expansion levels and do not depend on rate of ASR progression.

We note that Dr. Saouma's testimony does not address this point on exposure of ASR-affected concrete at Seabrook to high radiation levels.

XI. CONCLUSION

Q236. Please summarize your testimony and the bases for your conclusion regarding the admitted contention.

A236. (MC, JS, CB, OB, EC) The contention lacks merit because the LSTP has been demonstrated to be sufficiently representative of reinforced concrete at Seabrook for the purpose of applying its conclusions within the SEM described in the LAR. Our testimony describes the key areas for establishing representativeness and the reasons why the LSTP is satisfactory in those areas.

The criticisms provided by Dr. Saouma highlight the differences between the NextEra method and his method for evaluating ASR. We agree that such differences exist, but we disagree with Dr. Saouma that usage of a methodology other than the "Saouma Model" or similar chemo-mechanical modeling techniques is inherently unacceptable. Dr. Saouma claims that the "Saouma Model" and similar modeling techniques are able to project ASR degradation and the associated predicted structural effects into the future. These approaches rely on many variables and many assumptions about those variables that ultimately require validation with actual expansion data from a structure. Instead, NextEra's approach of monitoring expansion measurements from a variety of locations throughout the plant provides a more direct approach with fewer assumptions. Hence, the aging management approach for Seabrook does not require prediction of expansion.

Furthermore, many of the criticisms provided by Dr. Saouma are addressed throughout the body of documentation that was prepared by NextEra and reviewed by the NRC as part of the LAR approval process. These documents, which were disclosed to C-10 as part of the contention process, were not cited in Dr. Saouma's testimony as documents that he reviewed.

Q237. Does this conclude your testimony?

A237. (MC, JS, CB, OB, EC) Yes.

Q238. In accordance with 28 U.S.C. § 1746, do you state under penalty of perjury that the foregoing testimony is true and correct?

A238. (MC, JS, CB, OB, EC) Yes.

Respectfully Submitted,

Executed in accord with 10 C.F.R. § 2.304(d)
Michael Collins
Director of Engineering, Seabrook Station
NextEra Energy
626 Lafayette Road
Seabrook, NH 03874
(603) 773-7811
michael.collins@nexteraenergy.com

Executed in accord with 10 C.F.R. § 2.304(d)
Edward Carley
Engineering Supervisor, License Renewal
NextEra Energy
626 Lafayette Road
Seabrook, NH 03874
(603) 773-7957
edward.carley@nexteraenergy.com

Executed in accord with 10 C.F.R. § 2.304(d)
John Simons
General Manager
MPR Associates
320 King Street
Alexandria, VA 22314
(703) 519-0258
jsimons@mpr.com

Executed in accord with 10 C.F.R. § 2.304(d)
Christopher Bagley
Supervisory Engineer
MPR Associates
320 King Street
Alexandria, VA 22314
(703) 519-0423
cbagley@mpr.com

Executed in accord with 10 C.F.R. § 2.304(d)
Oguzhan Bayrak, Ph.D., P.E.
7900 Texas Plume Road
Austin, TX 78759
(512) 241-1857
bayrakpe@gmail.com

July 24, 2019