Exelon Generation®

200 Exelon Way
Kennett Square, PA 19348

www.exeloncorp.com

10 CFR 50.55a

June 27, 2019

U.S. Nuclear Regulatory Commission
ATTN: Document Control Desk
Washington, DC 20555-0001

R. E. Ginna Nuclear Power Plant
Renewed Facility Operating License No. DPR-18
NRC Docket No. 50-244

Subject: Submittal of Relief Requests Associated with the Sixth Inservice Inspection (ISI) Interval

Attached for your review are relief requests associated with the sixth Inservice Inspection (ISI) interval for the R. E. Ginna Nuclear Power Plant. The sixth interval program complies with the 2013 Edition of the American Society of Mechanical Engineers (ASME) Boiler and Pressure Vessel (B&PV) Code. The sixth ISI interval at R. E. Ginna Nuclear Power Plant will begin on January 1, 2020 and is currently scheduled to end December 31, 2029. We request your approval of this package by June 27, 2020.

There are no regulatory commitments in this letter.

If you have any questions concerning this letter, please contact Tom Loomis at (610) 765-5510.

Respectfully,

James Barstow
Director - Licensing & Regulatory Affairs
Exelon Generation Company, LLC

Attachment: Relief Requests Associated with the Sixth Ten-Year Interval for the R. E. Ginna Nuclear Power Plant

cc: Regional Administrator, Region I, USNRC
USNRC Project Manager - Ginna
USNRC Senior Resident Inspector, Ginna
A. L. Peterson, NYSERDA

Attachment

Relief Requests Associated with the Sixth Ten-Year Interval for the
R. E. Ginna Nuclear Power Plant

I6R-01
I6R-02

Request for Relief I6R-01 for Use of
Alternative Bottom Mounted Instrumentation Examinations
In Accordance with 10 CFR 50.55a(z)(1)

---

1. ASME Code Component(s) Affected

The Class 1 Reactor Vessel includes the sub components of 36 Inconel 600 Bottom Mounted Instrumentation (BMI) Penetrations. The specific nozzle component numbers are:

A65	A68-2	A71	A75	A80	A86
A66-1	A69	A72	A76	A81	A87
A66-2	A70-1	A73-1	A77	A82	A88-1
A67-1	A70-2	A73-2	A78-1	A83	A88-2
A67-2	A70-3	A74-1	A78-2	A84	A89-1
A68-1	A70-4	A74-2	A79	A85	A89-2

2. Applicable Code Edition

The sixth 10-year interval of the R. E. Ginna Nuclear Power Plant Inservice Inspection (ISI) program is based on the American Society of Mechanical Engineers (ASME) Boiler and Pressure Vessel (B&PV) Code, Section XI, 2013 Edition.

3. Applicable Code Requirement

10 CFR 50.55a incorporates additional requirements, one of which is ASME Code Case N-722-1, "Additional examinations for PWR Pressure Retaining Welds in Class 1 Components Fabricated with Alloy 600/82/182 Materials" with conditions, Section XI, Division 1. Table 1, Examination Category Item Number B15.80, RPV Bottom Mounted Instrument Penetration requires a bare metal visual examination every other refueling outage.

4. Reason for Request

10 CFR 50.55a(g)(6)(ii)(E)(1) requires pressurized water reactors to augment the inservice inspection program by implementing Code Case N-722-1 with conditions in 10 CFR 50.55a(g)(6)(ii)(E)(2) through (4). Code Case N-722-1 requires a bare metal visual examination during every other refueling outage. Code Case N-722-1 Table 1 referenced Notes 3, 4, 5 that provide specific examination requirements.

R. E. Ginna Nuclear Power Plant is not able to perform a complete bare metal visual examination as defined in ASME Code Case N-722-1 due to paint in and around the nozzle annulus. The extent of paint-occlusion has been documented and ranges from 12.5% to 100%, with 10 nozzles being 100% occluded with paint in the annuli.

While the paint could be potentially minimized in the area of interest, replication has shown that the paint has wicked up into the annuli. As a result, the ability to remove paint to meet the 100% bare metal visual inspection will not be met.

The fourth interval ISI program, Relief Request Number 24, dealt with this subject and was submitted and approved by the Nuclear Regulatory Commission (NRC). Relief Request Number 24 identified the historical visual examination performed every refueling outage (RFO) since the 2003 RFO with no detection of leakage during the as-found inspections of the Bottom Mounted Instruments (BMIs). Relief Request Number 24 also identified R. E. Ginna Nuclear Power Plant's commitment to perform a detailed visual examination during the 2009 and 2011 Refueling Outages (RFOs) and a volumetric examination of the 36 BMI nozzles including the volume of the tube and the weld interface to the intent of ASME Section XI Appendix VIII during the 2011 RFO. Relief Request Number 24 was approved by NRC Safety Evaluation (SE) dated March 8, 2010 (Reference 8).

The fifth interval ISI program, Relief Request Number ISI-05, was submitted to identify the continued plan (visual examination each RFO) for R. E. Ginna Nuclear Power Plant's 36 BMI nozzles. Relief Request Number ISI-05 was approved by NRC SE dated June 29, 2012 (Reference 9).

The sixth interval ISI program, Relief Request Number I6R-01, is being submitted to identify the continued plan (visual examination each RFO) for R. E. Ginna Nuclear Power Plant's 36 BMI nozzles. This alternative has been approved for use during the past two ISI Intervals and provides equal or better leakage detection capability and therefore satisfies the criteria of 10 CFR 50.55a(z)(1).

5. Proposed Alternative and Basis for Use

R. E. Ginna Nuclear Power Plant proposes to perform an as-found visual examination of the BMI surfaces during every refueling outage to the visual examination requirement (VE, enhanced visual) of Code Case N-722-1. Since detailed visual examinations were performed in the as-found condition since 2003 with no detection of reactor coolant leakage, the visual examination shall be performed during the 2020 RFO and every refueling outage after the 2020 RFO.

The Reactor Pressure Vessel (RPV) was designed and constructed to ASME Section III, 1965 Edition. This code did not contain requirements to ensure that items be accessible for future examination. The construction code did not contain requirements to prevent the application of paint to the BMI nozzle annuli which now prevents a bare metal visual examination. Removal of the paint by chemical, mechanical, or thermal process will expose workers to unneeded dose, spread contamination, and risk damaging the pressure boundary. In addition, due to paint being wicked in the annulus area, there is no guarantee of successful accomplishment of adequate paint removal.

During the 2009 RFO, samples of paint from the R. E. Ginna Nuclear Power Plant's Reactor Vessel Bottom head were removed for analysis (Reference 6). The paint samples taken were from the machined nozzle Outer Diameter (OD) surface and from the lower head. Cracks in the paint were identified in the nozzle annulus. During the 2011 RFO, metallurgical replicas were taken of the nozzle-to-head annulus at three locations (Reference 6). Cracks in the paint were identified.

R. E. Ginna Nuclear Power Plant, with the assistance of Southwest Research Institute (Reference 7), performed an evaluation of leakage and deposit formation in painted full-scale BMI mockups. The objective of this testing program was to determine the effect of a paint layer applied to the bottom of the low alloy steel ring and covering the annulus gap on leakage out of the annulus and deposit formation around the leaking annulus. A secondary objective was to obtain information about the effect of the paint layer on pressures within the leaking annulus.

The results of the Southwest Research Institute investigation are as follows:

1. Paint applied over the annulus exit on the bottom of the mockup was not an effective barrier for either liquid water or steam exiting the annulus. Leakage through the paint started quickly when pressure was applied, even under ambient temperature conditions. Low annulus pressures, 149 psi maximum, were sufficient to create the leak paths through the paint.

2. Thermal cycling produced cracking of the paint over the annulus similar to those observed on the Ginna RPV in 2009. These cracks serve as effective leak paths for effluent trying to leave the annulus.

3. Even in the absence of prior degradation, the paint does not provide an effective barrier to prevent or delay steam from exiting the annulus at elevated temperatures.

4. Once leaks form, the paint does not appear to alter either the location or the volume of the boric acid deposits that form from the steam escaping from the annulus.

5. If the presence of a stress corrosion crack provides a path for primary coolant to enter the annulus surrounding a BMI nozzle, the presence of paint on the bottom of the reactor around the nozzle should not provide any significant impediment to the steam exiting the bottom of the annulus nor to leak detection by visual inspection for the presence of deposits around the nozzle.

6. The small annulus pressure and time required to produce leakage through the paint indicates that the presence of the paint should not alter the boric acid wastage processes or rates within the annulus from those that would occur in an unpainted annulus.

During the 2011 RFO, Ultrasonic Examination of all BMI nozzles was performed. This examination did not identify Inner Diameter (ID) or OD initiated cracking. One original manufacturing defect on BMI nozzle "A86" was identified. In accordance with ASME Section XI Code, 2004 Edition, no Addenda, paragraph IWB-3144(b), an Analytical Evaluation of the embedded (non-wetted) indication on BMI nozzle "A86" caused from original manufacturing was provided under a separate submittal dated March 12, 2012 (Reference 10). Additional information was presented (References 6 and 7) which shows that the painted coating on the BMI annuli will not prevent the timely visual identification of leakage. R. E. Ginna Nuclear Power Plant has not identified any service induced cracking or leakage during examinations performed during the fourth and fifth ISI Intervals.

Based on these results, R. E. Ginna Nuclear Power Plant proposes to perform an as-found visual examination of the BMI surfaces during every refueling outage as an alternative to the 100% bare metal visual examination required by Code Case N-722-1. This is considered to be an alternative that is better than Code Case N-722-1 requirements because any minor impediments that the paint contributes to the timely identification of external leakage is more than compensated by the inspections every RFO (instead of every other RFO). The visual examination (VE examination of Code Case N-722-1) shall be performed again during the 2020 RFO and every refueling outage after the 2020 RFO.

6. Duration of Proposed Alternative

Relief is requested for R. E. Ginna Nuclear Power Plant until such time that 10 CFR 50.55a(g)(6)(ii)(E) is revised to impose visual examinations of BMI nozzle bare metal surfaces more frequently than once every other refueling outage.

7. Precedents

R. E. Ginna Nuclear Power Plant fifth ISI interval relief request was authorized by NRC Safety Evaluation (SE) dated June 29, 2012 (Reference 9). This relief request for the R. E. Ginna Nuclear Power Plant sixth ISI interval, utilizes a similar approach to the previously approved relief request.

8. References

1) 10 CFR 50.55a, Codes and Standards.

2) American Society of Mechanical Engineers (ASME) Code Case N-722-1; "Additional Examinations for PWR Pressure Retaining Welds in Class 1 Components Fabricated with Alloy 600/82/182 Materials."

3) ASME Boiler and Pressure Vessel Code, Section XI, 2013 Edition, No Addenda; "Rules for Inservice Inspection of Nuclear Power Plant Components."

4) Pacific Northwest National Laboratory, NUREG/CR-6943, PNNL-16472, A Study of Remote Visual Methods to Detect Cracking in Reactor Components, October 2007, Prepared for Division of Fuel, Engineering and Radiological Research Office of Nuclear Regulatory Research.

5) R. E. Ginna BMI Drawing 117828E, Revision 6 (Westinghouse Proprietary).

6) R. E. Ginna Material Laboratory Report, Ginna Reactor Vessel Bottom Mounted Instrumentation Paint Cracking Analysis, October 5, 2011.

7) Southwest Research Institute, SwRI Project No. 18.16196, Evaluation of Leakage and Deposit Formation in Painted Full-Scale BMI Mockups, Revision 2, April 2011.

8) Letter from N. Salgado (NRC) to John Carlin (R. E. Ginna Nuclear Power Plant LLC), "Relief Request Number 24 – Fourth Interval Inservice Inspection Program Proposed Alternative for Bottom Mounted Instrument Examinations – R. E. Ginna Nuclear Power Plant (TAC No. ME1364)," dated March 8, 2010 (ADAMS Accession No. ML100290926).

9) Letter G. Wilson (U.S. Nuclear Regulatory Commission) to J. Pacher (R. E. Ginna Nuclear Power Plant, LLC), "R. E. Ginna Nuclear Power Plant – Relief Request for Authorization of a Proposed Alternative for Certain Requirements of Inservice Inspection Program for Examination of Bottom Mounted Instrumentation Nozzles (TAC No. ME7731)," dated June 29, 2012 (ADAMS Accession No. ML12179A322).

10) Letter T. Mogren (R. E. Ginna Nuclear Power Plant, LLC) to U.S. Nuclear Regulatory Commission, "ASME Code Section XI Evaluation of the Bottom Mounted Instrumentation (BMI) Penetration Nozzle A86 at the R. E. Ginna Nuclear Power Plant," dated March 16, 2012 (ADAMS Accession No. ML12080A141).

Request for Relief I6R-02 for Examination of ASME Section XI, Examination Category B-G-1, Item Number B6.40, Threads in Flange In Accordance with 10 CFR 50.55a(z)(1)

---

1. ASME Code Component(s) Affected

Code Class:	1
Reference:	IWB-2500, Table IWB-2500-1
Examination Category:	B-G-1
Item Number:	B6.40
Description:	Alternative for Examination of ASME Section XI, Examination Category B-G-1, Item Number B6.40, Threads in Flange
Component Number:	48 RPV threads in flange

2. Applicable Code Edition

The sixth 10-year interval of the R. E. Ginna Nuclear Power Plant Inservice Inspection (ISI) program is based on the American Society of Mechanical Engineers (ASME) Boiler and Pressure Vessel (B&PV) Code, Section XI, 2013 Edition.

3. Applicable Code Requirement

The Reactor Pressure Vessel (RPV) threads in flange, Examination Category B-G-1, Item Number B6.40, are examined using a volumetric examination technique with 100% of the flange threaded stud holes examined every ISI interval. The examination area is the one-inch area around each RPV stud hole, as shown on Figure IWB-2500-12.

4. Reason for Request

In accordance with 10 CFR 50.55a(z)(1), relief is requested on the basis that the proposed alternative will provide an acceptable level of quality and safety. Exelon Generation Company, LLC (EGC) is requesting a proposed alternative from the requirement to perform inservice ultrasonic examinations of Examination Category B-G-1, Item Number B6.40, Threads in Flange for R. E. Ginna Nuclear Power Plant. EGC has worked with the industry to evaluate eliminating the RPV threads in flange examination requirement. Licensees in the U.S. and internationally have worked with the Electric Power Research Institute (EPRI) to produce Technical Report No. 3002007626, "Nondestructive Evaluation: Reactor Pressure Vessel Threads in Flange Examination Requirements" (Reference 1), which provides the basis for elimination of the requirement. The report includes a survey of inspection results from over 168 units, a review of operating experience related to RPV flange/bolting, and a flaw tolerance evaluation. The conclusion from this evaluation is that the current requirements are not

commensurate with the associated burden (worker exposure, personnel safety, radwaste, critical path time, and additional time at reduced water inventory) of the examination. The technical basis for this alternative is discussed in more detail below.

Potential Degradation Mechanisms

An evaluation of potential degradation mechanisms that could impact flange/threads reliability was performed as part of Reference 1. Potential types of degradation evaluated included pitting, intergranular attack, corrosion fatigue, stress corrosion cracking, crevice corrosion, velocity phenomena, dealloying corrosion, general corrosion, stress relaxation, creep, mechanical wear, and mechanical/thermal fatigue. Other than the potential for mechanical/thermal fatigue, there are no active degradation mechanisms identified for the threads in flange component.

The EPRI report notes a general conclusion from Reference 2, (which includes work supported by the Nuclear Regulatory Commission (NRC)) that when a component item has no active degradation mechanism present, and a preservice inspection has confirmed that the inspection volume is in good condition (i.e., no flaws / indications), then subsequent inservice inspections do not provide additional value going forward. As discussed in the Operating Experience review summary below, the RPV flange ligaments have received the required preservice examinations and over 10,000 inservice inspections, with no relevant findings.

To address the potential for mechanical/thermal fatigue, Reference 1 documents a stress analysis and flaw tolerance evaluation of the flange thread area to assess mechanical/thermal fatigue potential. The evaluation consists of two parts. In the first part, a stress analysis is performed considering all applicable loads on the threads in flange component. In the second part, the stresses at the critical locations of the component are used in a fracture mechanics evaluation to determine the allowable flaw size for the component as well as how much time it will take for a postulated initial flaw to grow to the allowable flaw size using guidelines in ASME Section XI, IWB-3500. The Pressurized Water Reactor (PWR) design was selected because of its higher design pressure and temperature. A representative geometry for the finite element model used the largest PWR RPV diameter along with the largest bolts and the highest number of bolts. The larger and more numerous bolt configuration results in less flange material between bolt holes, whereas the larger RPV diameter results in higher pressure and thermal stresses.

Stress Analysis

A stress analysis was performed in Reference 1 to determine the stresses at critical regions of the thread in flange component as input to a flaw tolerance evaluation. Sixteen nuclear plant units (ten PWRs and six Boiling Water Reactors (BWRs)) were considered in the analysis. The evaluation was performed using a geometric configuration that bounds the sixteen units considered in this effort. The details of the RPV parameters for R. E. Ginna Nuclear Power Plant as compared to the values used in the evaluation of the

bounding preload stress are shown in Table 1. The preload stress for R. E. Ginna Nuclear Power Plant is bounded by the Reference 1 report. Specifically, the Reference 1 preload stress is 42,338 psi, whereas the preload stress is 26,202 psi at R. E. Ginna Nuclear Power Plant. The R. E. Ginna Nuclear Power Plant stress is bounded by the Reference 1 report which demonstrates that the report remains applicable to this relief request.

For comparison purposes, the global force per flange stud can be estimated by the pressure force on the flange ($p*\pi*r^2$, where p is the design pressure and r is the vessel inside radius at the stud hole elevation) divided by the number of stud holes. From the parameters in Table 1, this results in a value of 1088 kips per stud for the configuration used in the analysis and 674 kips per stud for the R. E. Ginna Nuclear Power Plant configuration, indicating that the configuration used in the analysis bounds that at R. E. Ginna Nuclear Power Plant. As shown in Table 1, the preload stress used in the analysis is also bounding compared to that at R. E. Ginna Nuclear Power Plant.

Table 1: Comparison of Parameters to Values Used in Bounding Analysis

Plant	No. of Studs Currently Installed	Minimum No. of Studs Evaluated	Stud Nominal Diameter (inches)	RPV Inside Diameter at Stud Hole (inches)	Flange Thickness at Stud Hole (inches)	Design Pressure (psig)	Preload Stress (psi)
R. E. Ginna	48	48	6	128.31	14.56	2500	26,202
Values Used in Bounding Analysis	**54**	**54**	**6.0**	**173**	**16**	**2500**	**42,338**

The analytical model is shown in Figures I6R-02-2 and I6R-02-3. The loads considered in the analysis consisted of:

- A design pressure of 2500 psia at an operating temperature of 600°F was applied to all internal surface exposed to internal pressure.
- Bolt/stud preload – Stress of 42,338 psi.
- Thermal stresses – The only significant transient affecting the bolting flange is heat-up/cooldown. This transient typically consists of a steady 100°F/hour ramp up to the operating temperature, with a corresponding pressure ramp up to the operating pressure.

The ANSYS finite element analysis program was used to determine the stresses in the thread in flange component for the three loads described above.

Flaw Tolerance Evaluation

A flaw tolerance evaluation was performed using the results of the stress analysis to determine how long it would take an initial postulated flaw to reach the ASME Section XI allowable flaw size. A linear elastic fracture mechanics evaluation consistent with ASME Section XI, IWB-3600 was performed.

Stress intensity factors (K's) at four flaw depths of a 360° inside-surface-connected, partial-through-wall circumferential flaws are calculated using finite element analysis techniques with the model described above. The maximum stress intensity factor (K) values around the bolt hole circumference for each flaw depth (*a*) are extracted and used to perform the crack growth calculations. The circumferential flaw is modeled to start between the 10th and 11th flange threads from the top end of the flange because that is where the largest tensile axial stress occurs. The modeled flaw depth-to-wall thickness ratios (a/t) are 0.02, 0.29, 0.55, and 0.77, as measured in any direction from the stud hole. This creates an ellipsoidal flaw shape around the circumference of the flange, as shown in Figure I6R-02-4 for the flaw model with a/t = 0.77 a/t crack model. The crack tip mesh for the other flaw depths follows the same pattern. When preload is not being applied, the stud, stud threads, and flange threads are not modeled. The model is otherwise unchanged between load cases.

The maximum K results are summarized in Table 2 for the four crack depths. From Table 2, the maximum K occurs at operating conditions (preload + heatup + pressure). Because the crack tip varies in depth around the circumference, the maximum K from all locations at each crack size is conservatively used for the *K vs. a* profile.

Table 2: Maximum K vs. a/t

Load	K at Crack Depth (ksi√in)			
	0.02 a/t	0.29 a/t	0.55 a/t	0.77 a/t
Preload	11.2	17.4	15.5	13.9
Preload + Heatup + Pressure	13.0	19.8	16.1	16.3

The allowable stress intensity factor was determined based on the acceptance criteria in ASME Section XI, IWB-3610/Appendix A which states that:

$$K_I < K_{Ic}/\sqrt{10} = 69.6 \text{ ksi}\sqrt{\text{in}}$$

Where,

K_I = Allowable stress intensity factor (ksi√in)
K_{Ic} = Lower bound fracture toughness at operating temperature (220 ksi√in)

As can be seen from Table 2, the allowable stress intensity factor is not exceeded for all crack depths up to the deepest analyzed flaw of a/t = 0.77. Hence the allowable flaw depth of the 360° circumferential flaw is at least 77% of the thickness of the flange. The allowable flaw depth is assumed to be equal to the deepest modeled crack for the purposes of this analysis.

For the crack growth evaluation, an initial postulated flaw size of 0.2 in. (5.08 mm) is chosen consistent with the ASME Section XI, IWB-3500 flaw acceptance standards. The deepest flaw analyzed is a/t = 0.77 because of the inherent limits of the model. Two load cases are considered for fatigue crack growth: heat-up/cooldown and bolt preload. The heat-up/cooldown load case includes the stresses due to thermal and internal pressure

loads and is conservatively assumed to occur 50 times per year. The bolt preload is assumed to be present and constant during the load cycling of the heat-up/cooldown load case. The bolt preload load case is conservatively assumed to occur five times per year, and these cycles do not include thermal or internal pressure. The resulting crack growth was determined to be negligible due to the small delta K and the relatively low number of cycles associated with the transients evaluated. Because the crack growth is insignificant, the allowable flaw size will not be reached and the integrity of the component is not challenged for at least 80 years (original 40-year design life plus additional 40 years of plant life extension).

An evaluation was also performed to determine the acceptability at preload condition. Table 3 below provides the RPV flange RT_{NDT} values and the bolt-up temperatures for R. E. Ginna Nuclear Power Plant. These were determined using the RT_{NDT} value from plant records. As can be seen from this table, the minimum ($T-RT_{NDT}$) is 112°F for R. E. Ginna Nuclear Power Plant. From the equations in paragraph A-4200 of ASME Section XI, Appendix A, the corresponding value of K_{Ic} is 228 ksi√in. Using a structural factor of √10, the allowable K_{Ic} value is 72 ksi√in. This value is more than the maximum stress intensity factor (K_I) for the preload condition of 17.4 ksi√in shown in Table 2, thus the report evaluation is bounding for R. E. Ginna Nuclear Power Plant.

Table 3: RPV Flange RT_{NDT} and Bolt-Up Temperature

Plant Name	Flange RT_{NDT} (°F)	Preload Temp (°F)	Minimum $T-RT_{NDT}$ (°F)
R. E. Ginna	60	>60	112

The stress analysis / flaw tolerance evaluation presented above shows that the thread in flange component is very flaw tolerant and can operate for 80 years without violating ASME Section XI safety margins. This clearly demonstrates that the thread in flange examinations can be eliminated without affecting the safety of the RPV.

Operating Experience Review Summary

As discussed above, the results of the survey, which includes results from R. E. Ginna Nuclear Power Plant, confirmed that the RPV threads in flange examination are adversely impacting outage activities (worker exposure, personnel safety, radwaste, critical path time, and additional time at reduced water inventory) while not identifying any service induced degradations. Specifically, for the U.S. fleet, a total of 94 units have responded to date and none of these units have identified any type of degradation. As can be seen in Table 4 below, the data is encompassing. The 94 units represent data from 33 BWRs and 61 PWRs. For the BWR units, a total 3,793 examinations were conducted and for the PWR units a total of 6,869 examinations were conducted, with no service-induced degradation identified. The response data includes information from all of the plant designs in operation in the U.S. and includes BWR-2, -3, -4, -5, and -6 designs. The PWR plants include the 2-loop, 3-loop, and 4-loop designs and each of the PWR NSSS designs (i.e., Babcock & Wilcox, Combustion Engineering, and Westinghouse).

Table 4: Summary of Survey Results – U.S. Fleet

Plant Type	Number of Units	Number of Examinations	Number of Reportable Indications
BWR	33	3,793	0
PWR	61	6,869	0
Total	94	10,662	0

Related RPV Assessments

In addition to the examination history and flaw tolerance discussed above, Reference 1 discusses studies conducted in response to the issuance of the Anticipated Transient Without Scram (ATWS) Rule by the NRC. This rule was issued to require design changes to reduce expected ATWS frequency and consequences. Many studies have been conducted to understand the ATWS phenomena and key contributors to successful response to an ATWS event. In particular, the reactor coolant system (RCS) and its individual components were reviewed to determine weak links. As an example, even though significant structural margin was identified in NRC SECY-83-293 for PWRs, the ASME Service Level C pressure of 3200 psig was assumed to be an unacceptable plant condition. While a higher ASME service level might be defensible for major RCS components, other portions of the RCS could deform to the point of inoperability. Additionally, there was the concern that steam generator tubes might fail before other RCS components, with a resultant bypass of containment. The key take-away for these studies is that the RPV flange ligament was not identified as a weak link and other RCS components were significantly more limiting. Thus, there is substantial structural margin associated with the RPV flange.

In summary, Reference 1 identifies that the RPV threads in flange are performing with very high reliability based on operating and examination experience. This is due to the robust design and a relatively benign operating environment (e.g., the number and magnitude of transients is small, generally not in contact with primary water at plant operating temperatures/pressures, etc.) The robust design is manifested in that plant operation has been allowed at several plants even with a bolt/stud assumed to be out of service. As such, significant degradation of multiple bolts/threads would be needed prior to any RCS leakage.

5. Proposed Alternative and Basis for Use

In lieu of the inservice requirements for a volumetric ultrasonic examination, R. E. Ginna Nuclear Power Plant proposes that the industry report (Reference 1) provides an acceptable technical basis for eliminating the requirement for this examination because the alternative maintains an acceptable level of quality and safety.

This report provides the basis for the elimination of the RPV threads in flange examination requirement (ASME Section XI Examination Category B-G-1, Item Number

B6.40). This report was developed because evidence had suggested that there have been no occurrences of service-induced degradation and there are negative impacts on worker dose, personnel safety, radwaste, critical path time for these examinations, and additional time at reduced water inventory.

Since there is reasonable assurance that the proposed alternative is an acceptable alternate approach to the performance of the ultrasonic examinations, R. E. Ginna Nuclear Power Plant requests authorization to use the proposed alternative in accordance with 10 CFR 50.55a(z)(1) on the basis that use of the alternative provides an acceptable level of quality and safety.

To protect against non-service related degradation, R. E. Ginna Nuclear Power Plant uses detailed procedures for the care and visual inspection of the RPV studs and the threads in flange each time the RPV closure head is removed. Care is taken to inspect the RPV threads for damage and to protect threads from damage when the studs are removed. Prior to reinstallation, the studs and stud holes are cleaned and lubricated. The studs are then replaced and tensioned into the RPV flange. This activity is performed each time the closure head is removed, and the procedure documents each step. These controlled maintenance activities provide further assurance that degradation is detected and mitigated prior to returning the reactor to service.

The care and visual inspections performed on the RPV threads in flange and studs are described in the following excerpts of R. E. Ginna Nuclear Power Plant site specific procedures:

RF-403, Revision 009, "Reactor Vessel Stud Removal"

4.10 All studs, nuts and washers **SHALL** be kept in matched numbered sets.

5.4 **ENSURE** the reactor vessel head flange has been cleaned of all debris.

_____

6.3.5 **INSPECT** the studs for cleanliness, including the stud threads, nuts, and washers and the reactor vessel head flange area.

_____

6.3.21 **WHEN** installing the stud tensioners,
THEN ENSURE that thread guards are installed on the adjacent studs **AND** that the flange area is clean.

_____

6.5.1 **INSPECT** the stud hole plugs and guide stud sleeves for cleanliness, nicks or burrs which may hinder their effectiveness **AND CLEAN** as required.

_____

RF-502, Revision 003, "Reactor Vessel Stud Cleaning and Lubrication"

6.1.10 **VISUALLY INSPECT** the reactor vessel stud assemblies for cleanliness, and for signs of deterioration.

6.1.12 **LIGHTLY LUBRICATE** the threads on the nut and the upper stud threads with Neolube No.2.

6.1.13 **LIGHTLY LUBRICATE** lower stud threads with N-7000.

6.1.14 **LUBRICATE** washer with Neolube No. 2.

RF-506, Revision 002, "Reactor Vessel Stud Maintenance"

NOTE

It is required that a stove pipe be inserted into the stud hole to be cleaned, to prevent debris from being ejected into the O-ring seating area while cleaning the stud hole.

IF stud holes were cleaned prior to head lift, **THEN** they are to be inspected and recleaned as necessary.

Stud Hole cleaning **SHALL** be such that loose rust is removed from the stud hole threads and visible debris vacuumed from the stud hole.

6.2.1 **INSPECT** all vessel flange stud holes for cleanliness.

RF-507, Revision 006, "Reactor Vessel Stud Installation"

6.1.1 **VERIFY** Reactor Vessel Studs have been cleaned and lubricated **PER** RF-502, Reactor Vessel Stud Cleaning and Lubrication.

_____

6.1.2 **VERIFY** that the Reactor Vessel Studs have been inspected **PER** RF-502, Reactor Vessel Stud Cleaning and Lubrication and that no outstanding Issue Reports are open on the Reactor Vessel Studs.

_____

6.1.7 **WHEN** installing the stud assemblies,
THEN ENSURE that the stud threads **DO NOT COME IN** Contact with the head flange to preclude thread damage.

_____

As discussed in the LR-IWBD-PROGPLAN, Revision 6, "ASME Section XI, Subsection IWB, IWC, & IWD Inservice Inspection Program," the R. E. Ginna Nuclear

Power Plant procedural guidance for the reactor head closure stud bolting aging management program requires that indications and relevant degraded conditions detected during examinations of reactor head closure stud components be evaluated in accordance with ASME Code, Section XI, Subsection IWB-3100 by comparing examination results with the acceptance standards of IWB-3400 and IWB-3500.

The EGC procedural guidance describes the process for care and visual inspections performed on RPV threads each time the RPV head is removed (i.e., each R. E. Ginna Nuclear Power Plant refueling outage). After the RPV head is removed, the work group inspects each RPV stud, nut, and washer for damage. As procedurally required, each RPV head stud, nut, washer, and stud hole is match marked to always be used together. All studs are cleaned to remove old lubricant and fresh lubricant is added to the bottom of the RPV stud threads.

A corrective action issue report is initiated to document potential degradation in accordance with plant administrative procedures. The 10 CFR Part 50, Appendix B corrective action program ensures that conditions adverse to quality are promptly corrected.

In summary, the existing guidance governing care and visual inspection activities of the RPV threads is sufficient and justifies elimination of the RPV threads in flange volumetric inspections for a consecutive 10-year ISI interval.

The requirements in this relief request are based upon ASME Section XI Code Case N-864 (N-864) (Reference 5) and will apply to Examination Category B-G-1, Item Number B6.40, Reactor Vessel Threads in Flange. N-864 was approved by ASME Board on Nuclear Codes and Standards on July 28, 2017; however, it has not been incorporated into NRC Regulatory Guide 1.147, "Inservice Inspection Code Case Acceptability, ASME Section XI, Division 1," and thus, is not available for application at nuclear power plants without specific NRC approval.

6. Duration of Proposed Alternative

Relief is requested for the sixth ISI interval for R. E. Ginna Nuclear Power Plant or until the NRC approves N-864, or a later revision, in Regulatory Guide 1.147 or other document during the interval.

7. Precedents

- R. E. Ginna Nuclear Power Plant fifth ISI interval relief request was authorized by NRC Safety Evaluation (SE) dated June 26, 2017 (Reference 3). This R. E. Nuclear Power Plant relief request was part of an EGC fleet-wide submittal, and the alternative for examination of ASME Section XI, Examination Category B-G-1, Item Number B6.40, threads in flange was authorized for various stations. This relief request for the R. E. Ginna Nuclear Power Plant sixth ISI interval, utilizes a similar approach to the previously approved relief request.

- Relief request was authorized for Vogtle Electric Generating Plant, Units 1 and 2, and Joseph M. Farley Nuclear Plant, Unit 1 by NRC SE dated January 26, 2017 (Reference 4) (ADAMS Accession No. ML17006A109).

- Relief request was authorized for Nine Mile Point Nuclear Station, Units 1 and 2, by NRC SE dated December 21, 2018 (Reference 6) (ADAMS Accession No. ML18334A236).

8. References

1) Nondestructive Evaluation: Reactor Pressure Vessel Threads in Flange Examination Requirements. EPRI, Palo Alto, CA: 2016. 3002007626 (ADAMS Accession No. ML16221A068).

2) American Society of Mechanical Engineers, Risk-Based Inspection: Development of Guidelines, Volume 2-Part 1 and Volume 2-Part 2, Light Water Reactor (LWR) Nuclear Power Plant Components. CRTD-Vols. 20-2 and 20-4, ASME Research Task Force on Risk-Based Inspection Guidelines, Washington, D.C., 1992 and 1998.

3) Letter from D. J. Wrona (NRC) to B. C. Hanson (EGC), Proposed Alternative to Eliminate Examination of Threads in Reactor Pressure Vessel Flange (CAC Nos. MF8712-MF8729 and MF9548), dated June 26, 2017 (ADAMS Accession No. ML17170A013).

4) Letter from M. T. Markley (NRC) to C. R. Pierce (Southern Nuclear Operating Co. Inc.), "Vogtle Electric Generating Plant, Units 1 and 2, and Joseph M. Farley Nuclear Plant, Unit 1 - Alternative to Inservice Inspection Regarding Reactor Pressure Vessel Threads in Flange Inspection (CAC Nos. MF8061, MF8062, MF8070)," dated January 26, 2017 (ADAMS Accession No. ML17006A109).

5) ASME Section XI Code Case N-864, "Reactor Vessel Threads in Flange Examination," Section XI, Division 1. ASME Approval Date: July 28, 2017.

6) Letter from J. G. Danna (NRC) to B. C. Hanson (EGC), "Nine Mile Point Nuclear Station, Units 1 and 2 - Alternative to the Requirements of the ASME Code (EPID L-2018-LLR-0087)," dated December 21, 2018 (ADAMS Accession No. ML18334A236).

Figure I6R-02-1
Modeled Dimensions

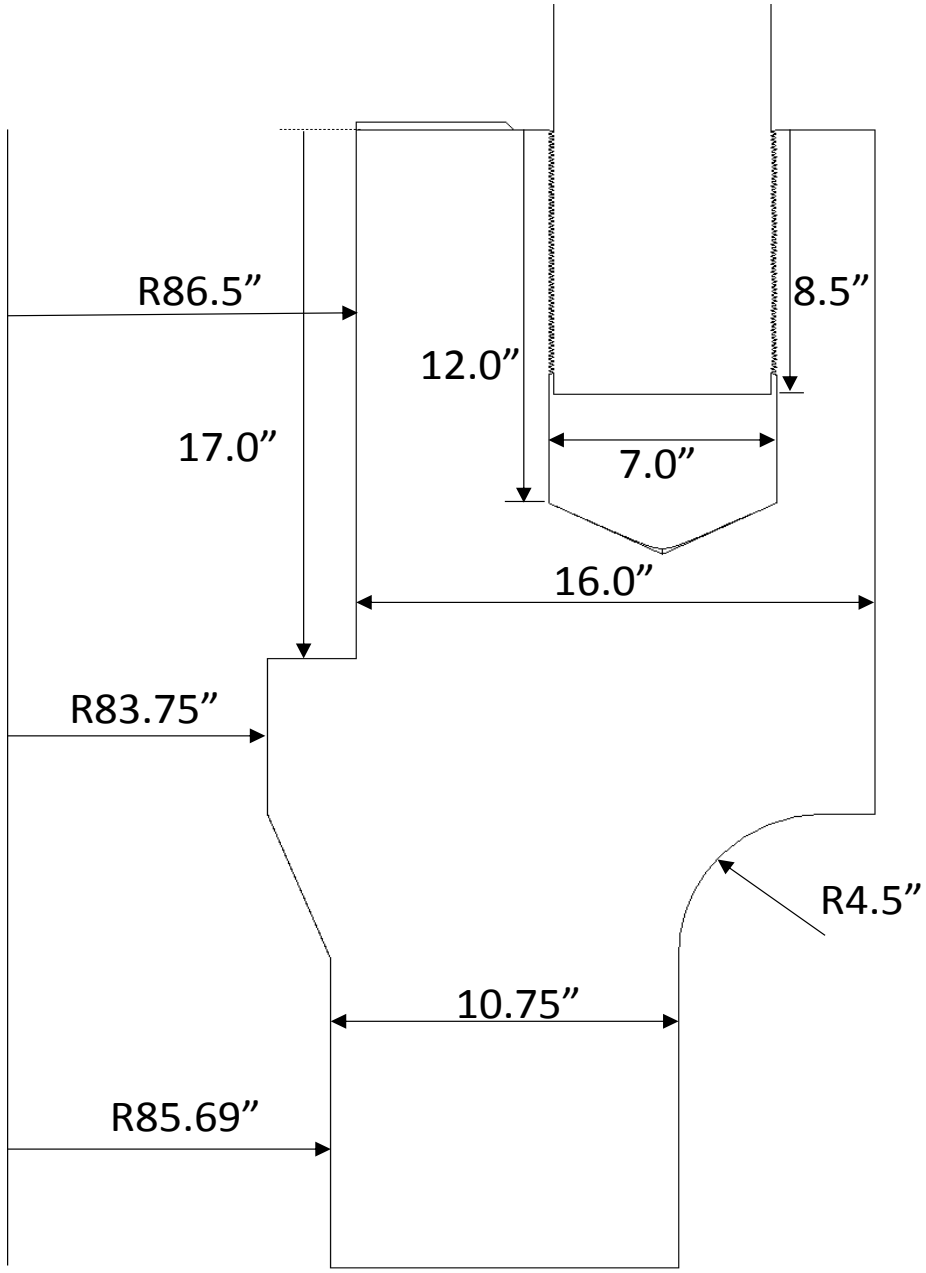

Figure I6R-02-2
Finite Element Model Showing Bolt and Flange Connection

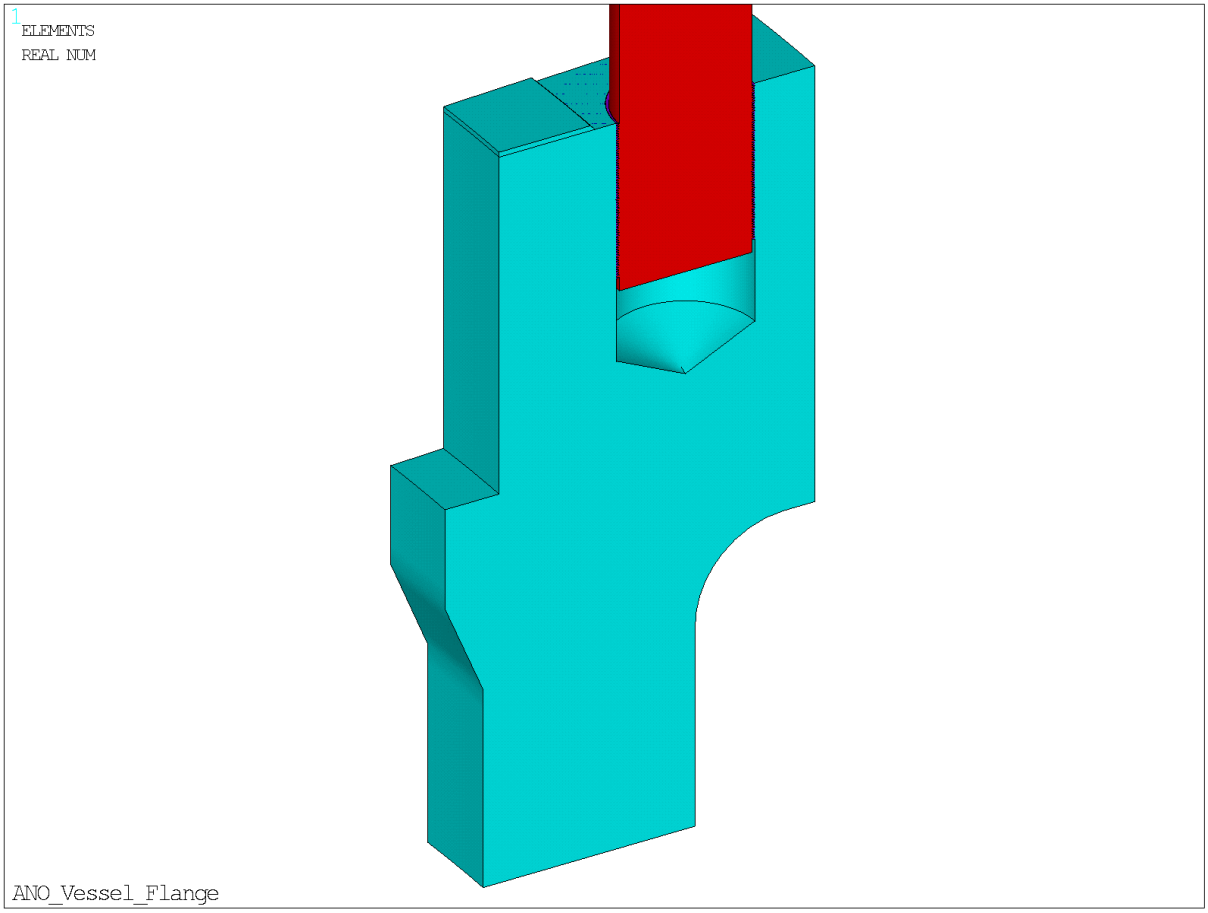

Figure I6R-02-3
Finite Element Model Mesh with Detail at Thread Location

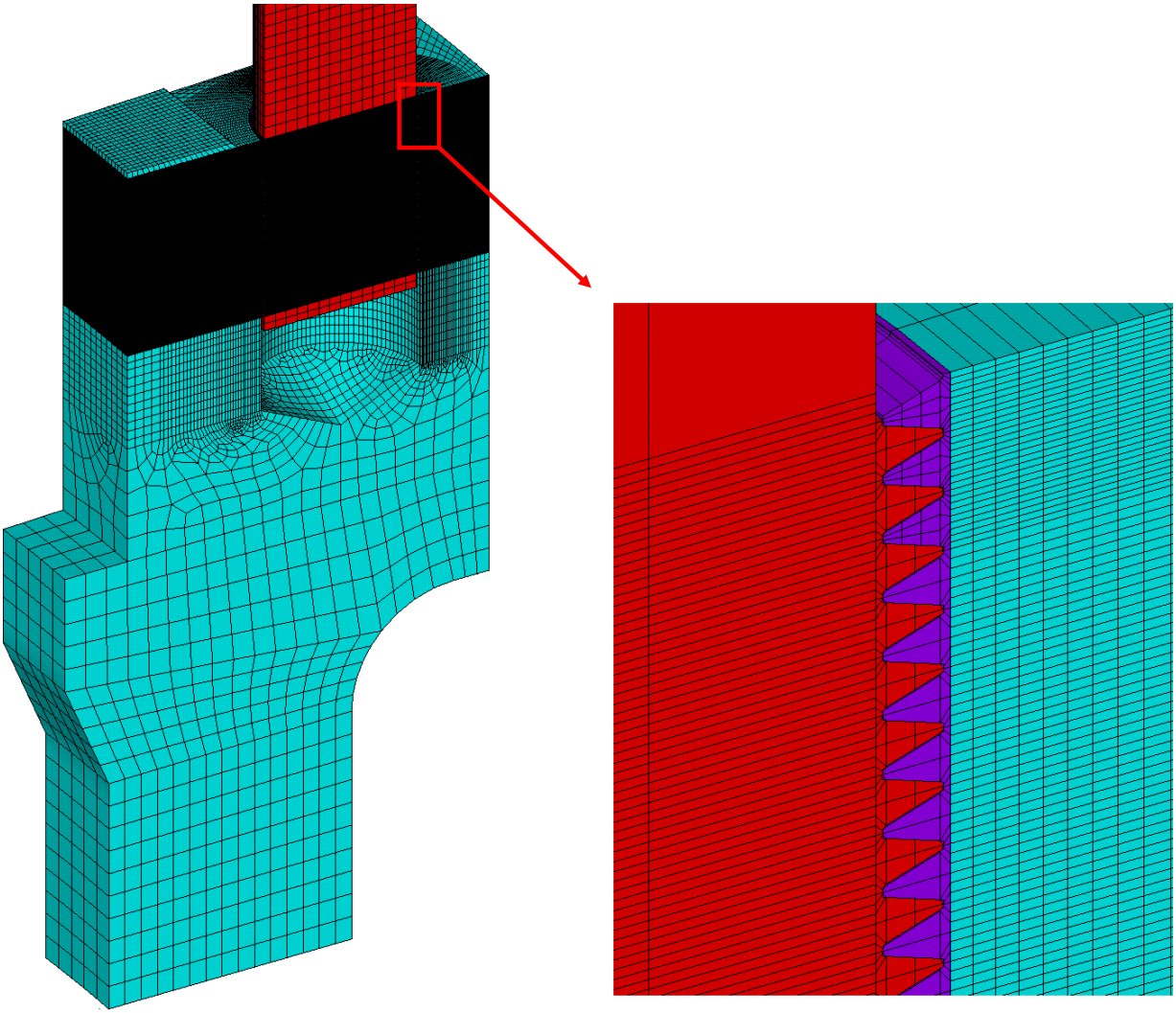

Figure I6R-02-4
Cross Section of Circumferential Flaw with Crack Tip Elements Inserted After 10th Thread from Top of Flange