Michael J Derivan comments/concerns on NuScale FSAR Chapter 15 Safety Analysis

Dear Sirs,
I have been reviewing the NuScale FSAR Chapter 15 Safety Analysis (submitted for the Design Certification) for the 'Reduction in MFW Flow'. It is described in **FSAR 15.2.7.2**. I have some questions and concerns about this analysis in particular and in general how these NuScale Safety Analysis transient results will fit into the use of the NuScale Control Room Simulator used for the NuScale HFE program. The HFE program, in conjunction with the NuScale Simulator, is part of the NuScale plan to justify reduced Licensed Operator manning from what is required in NRC regulations. This is much discussed in other NuScale/NRC documents, and the HFE Program is described in other NuScale submittals.

The crux of my concern with the Reduction in MFW Flow analysis is this:

1. The analysis states the transient is terminated with a reactor high temperature trip (but the specific Th value at time of Reactor Trip is not stated or shown in this analysis. Is it the **Analytical Limit** of 610F as shown in **FSAR Table 15.0-7**?). The Reactor Trip is shown to occur in 690 seconds **(FSAR Table 1.2-21)** after a reduction in MFW Flow from 100% to 97.7% (in 0.1 sec). 690 seconds is 11.5 minutes!
   I want to see this analysis provide enough information in this FSAR analysis section/discussion so I can calculate an RCS water expansion volume (in ft-cu), to independently evaluate the expected increase in Pressurizer Level and RCS Pressure. (Or better yet, NRC Staff do the calc, they just might learn something).
   NOTE: Needed RCS volumes for a calculation are given in FSAR Section 5.
   My concern about this issue is based on my history as a Licensed Operator, and how this type event, coupled with FSAR Safety Evaluation transient understanding and training played into the TMI2 accident.

2. The analysis states conservative assumptions (initial conditions) are used. This analysis states it starts at a T-ave of 555F **(FSAR Table 15.0-6)**. This value is the plus side of the stated 'Uncertainty/Bias' value of plus or minus 10F considering a normal T-ave of 545F. It is not obvious the 'plus' uncertainty is conservative the way this transient has been run. It may intuitively seem starting hotter than normal is conservative with respect to thermal-hydraulic limits of the core, conditions at the core, or even Steam Generator maximum secondary pressure. But this transient basically 'cooks up' the RCS T-ave for 690 seconds until it trips on high Th. With the information provided, it is not obvious to me a worse case would be starting at the opposite 'bias' value with T-ave at 535F because T-ave has farther to run to the Th Trip so the time to Reactor Trip is longer, and the RCS water expansion volume would be larger. (This basically plays into another concern… where is all the RCS water expansion volume going during this RCS heat-up? I can't even find a plot of Pressurizer Level vs Time in the FSAR for this analysis. This expansion of Reactor Coolant is a very significant player in this event progression and final event results. Think TMI2. Further… **(FSAR Table 1.0-2**) under **Event Progression** states:

   > "An AOO should not develop into a more serious plant condition without other faults occurring independently. Satisfaction of this criterion precludes the possibility of a more serious event during the lifetime of the plant."

This particular event is obviously an AOO and I'm not convinced (nor should NRC be) it has been analyzed correctly with respect to increasing RCS Pressure and Pressurizer Level effects on the transient results. Not enough information is provided in the FSAR results to calculate an RCS expansion volume to get a feel for the Pressurizer Level increase. (It's also not my job to do this hand calc, but there is not enough info provided to do it anyway).

3. **FSAR Table 15.0-9 Assumed Single Failures and Credited Nonsafety-Related Systems** states for this event:

15.2.7 Loss of Normal Feedwater Flow… No adverse single failures.

However no discussion (or FSAR reference to) of the Single Failures actually considered for this event is provided (reminds me of TMI2), so again it is just a "CLAIM."

Further from **FSAR 15.2.7.5 Conclusions**:

5) The most limiting plant systems single failure, as defined in the "Definitions and Explanations" of Appendix A to 10 CFR Part 50, shall be identified as assumed in the analysis and shall satisfy the positions of RG 1.53.

•No single failures were identified that have adverse impact on the acceptance criteria. Results from this scenario do not challenge the identified limiting parameters as described in this Section.

<u>NuScale should provide a FSAR reference to where in the FSAR this claim is proven.</u>

4. Generically, NuScale hasn't presented enough evidence, in FSAR Chapter 15, to prove to me, (an ex-licensed SRO) nor NRC, that any of their Safety Analysis (SA) assumptions are conservative; they just "claim it". When I was taught SA in the early '70s, Sensitivity Studies for input assumptions were done, and also reported in FSARs in the form of plots of key result vs. input value. Basically several transients obviously had to be run, using varying input assumptions showing the sensitivity (of the results) to particular input assumptions, but only the sensitivity vs. variable plot was shown in the FSARs, not all the actual computer run results. This is key to an Operator understanding the whole process. NuScale needs to either show all the runs in the FSAR or provide sensitivity studies in the FSAR to PROVE their analysis actually use conservative assumptions.

5. In the FSAR Sensitivity Study Analysis discussion section for this event **FSAR 15.9.3.2** it is stated:

   "Stability following reduction of feedwater flow is addressed in this section. A hypothetical rapid decrease in feedwater flow occurs because of feedwater pump speed change, valve alignment changes, or other causes. However, complete loss of feedwater is not considered because it would result in actuation of the MPS and a trip."

   And

   "The response to a rapid reduction in feedwater flow at 32 MW with initial decay heat consistent with 32 MW is stable."

   Why is NuScale limiting the Sensitivity study to a minimum of 32MWt (20% Rx Power) when operation below 20% RTP is part of the design. Additionally below ~15% RTP the Nuscale T-ave (and Pressurizer Level) are on a "ramp", and it is not obvious to me (nor considered by NuScale in the FSAR) that somewhere down the T-ave ramp (as a start

point) would not be a worse case overall scenario for this event. It can also be a player in the Initial Power Escalation Test Program for this plant for ex-core indicated power (and controls) as ex-core Nuclear Instruments require N leakage from the core which is influenced by the water T the leaking Ns pass through to get to the detector. I wonder about this initial condition because a similar event actually happened to me at Davis Besse on Sept 24, 1977. Not only did we end up with no auto Rx Trip, and a stuck open PORV, a full indicated Pressurizer level, a saturated RCS, with HPI off. It is certainly not clear to me, as stated by NuScale, the plant result for the NuScale design is "STABLE." **In fact I don't even believe it!!!**
I am concerned about this plant condition at event initiation because I can add my previous plant SA training was of no use to me, my EOPs based on that SA were of no use to me, and apparently the significance of that DBNPP event was not considered significant enough to provide a warning to the TMI2 Operators. The reason this point IS significant is because the initial crew of NuScale Licensed Operators will have no actual Operational Plant data (or benchmarked Simulator Training), to learn integrated plant response characteristics other than the fictional SA transients fed to the Training Simulator.

I also don't understand NuScale's statement that for this study Decay Heat is consistent with Decay Heat for 32MWt when a core DH is dependent on the total EFPD history of the core, not the core power level at the time of an event.

As an aside, the NuScale SA never uses a positive moderator reactivity coefficient. Does this design never have one, even at BOL as all new "old" design PWRs did (because of the high RCS Boron required on a brand new fresh core)?

6. I'd like NuScale to provide the RCS Loop Transport time at 100% RTP. It is important to know, with respect to how quickly installed T instruments (and controls) can "see" RCS T changes that result from Heat Transfer perturbations initiating in OTSGs. It can explain why PORVs could lift on original B&W 177 FA designs (with original plant setpoints) even before T changes are seen on RCS T instruments, even with an automatic Reactor Trip co-incident with Loss of MFW.

Changing the subject of my concern. It is well understood NuScale plans to ask for changes (reductions) to the required Licensed Operator manning as required in current NRC regulations. It is also well understood NuScale plans to do this based on using the NuScale Simulator for their HFE Program… basically using Simulator runs to show the "Task Analysis" functions, previously identified, required for events (DBAs, AOOs, etc) can be completed with the proposed NuScale Licensed Operator manning. My specific questions/concerns are below:

7. The last NuScale/NRC correspondence I saw concerning the SCOPE of the Task Analysis and this HFE investigation, was it would be limited with-in the scope of the NuScale NSSS Supply. This might imply events such as the **FSAR 15.2.7.2** MFW transients might not be included in this program because the MFW System is NOT with-in the scope of NuScale NSSS supply. Is my assumption correct??? (I still remember TMI2). I know it is not my shot to call…. But if it was "THIS PIG DON'T FLY."

8. The ‘work-horse’ code for the NuScale SA is NRELAP. Those codes don’t run in ‘real time’. What code is running on the NuScale Simulator, which has to run in real time to be a “Training Simulator”, or of any value at all in evaluating Operator performance. (You know where this is going….). Is the NuScale Simulator running NRELAP? The whole point is there is no plant operations/transient data even available for this paper reactor other than what is a figment of someone’s (good) imagination (I acknowledge NRC Staff are reviewing it). <u>What code exactly is this Simulator running that can be used as a basis for reducing Licensed Operator manning below current NRC regulations???</u> And just why does NRC trust it for something this important?

9. Has the NuScale Simulator been “benchmarked” against anything? If it runs its own “modified” code has it been benchmarked against the FSAR SA runs? If the Simulator is just running the FSAR SA code… you have nothing useful to “justify” anything, much less reduced Licensed Operator manning.

10. Has the NuScale Simulator OTSG (code) performance been benchmarked against the test runs of the OTSG done at the test facility in Italy?

11. FSAR Figure 15.0-9 has this P vs T graph:

Figure 15.0-9: Analytical Operating Limits

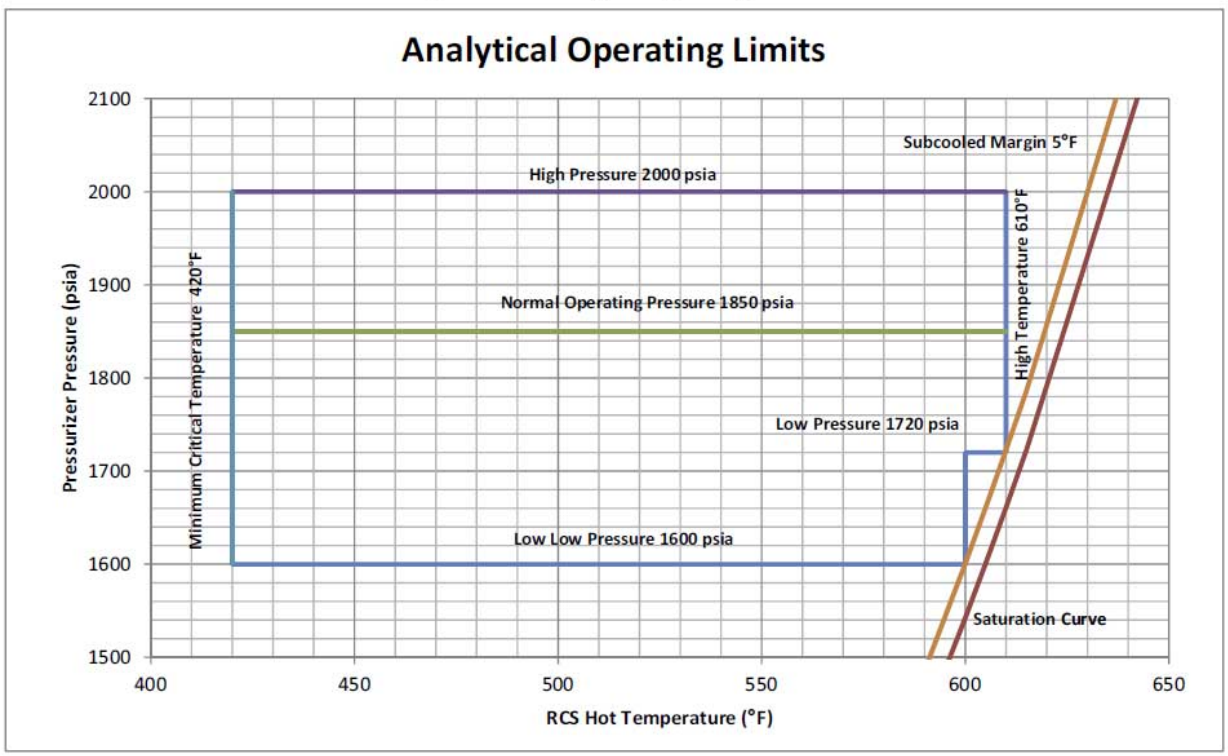

A typical PWR (at least a B&W plant) has an SPDS display such as this where RCS P and T plot in real-time and maintain the 'history trace'. It is an extremely handy tool for Operators to monitor and diagnose plant up-sets.

a) I'd like to see the NuScale FSAR 'Reduction in MFW Flow' SA transient results plotted on such a graph.
b) Then also add (to the same graph) the same transient results run at the same Initial Conditions as the FSAR SA, for a run on the NuScale Simulator. (Provides a "sanity check" for the 2-codes/model comparison).
c) Then I'd like to see the results for a Simulator run using all the same Input Values… except start with a T-ave using the negative bias value of 535F vice 555F. It would show if the NuScale SA transient IC is indeed "conservative."

My conclusion and recommendation relative to the needed number of Licensed Operators. The current published path has the "cart before the horse" on the needed number of Operators issue. This is a FOAK (and strange PWR with OTSGs) unit with no actual operational data available. If NRC can certify the design, independent of the Operator issue… so be it. Then build it, test it, gather the actual operational data (including easily run AOO events, etc.) during the Start-up Test Program and feed that actual plant response data back into the Simulator model/configuration. Then after it is known the Simulator has been benchmarked to actual plant response, and its performance is accurate, run the HFE Program to assess a lowing the number of needed Operators (for additional modules up to the proposed 12-Units). At that point NuScale and NRC can go back and re-address the required number of Operators needed for additional added modules in the long-term with confidence.

I also note that NuScale's proposed Licensed Operator manning for a proposed 12-Unit full installation (3-ROs and 3-SROs) does in fact meet the current Operator manning NRC regulations if considering just a 1-module NuScale plant, which is all that will be operating at that point in time. Thus there is no "risk" (or delay) proceeding with my suggested path.

Discussion of RCS response to a Reduction in MFW Flow, for a PWR with OTSGs.
In a nut shell:

Figure 5.1-2: Reactor Coolant System Simplified Diagram

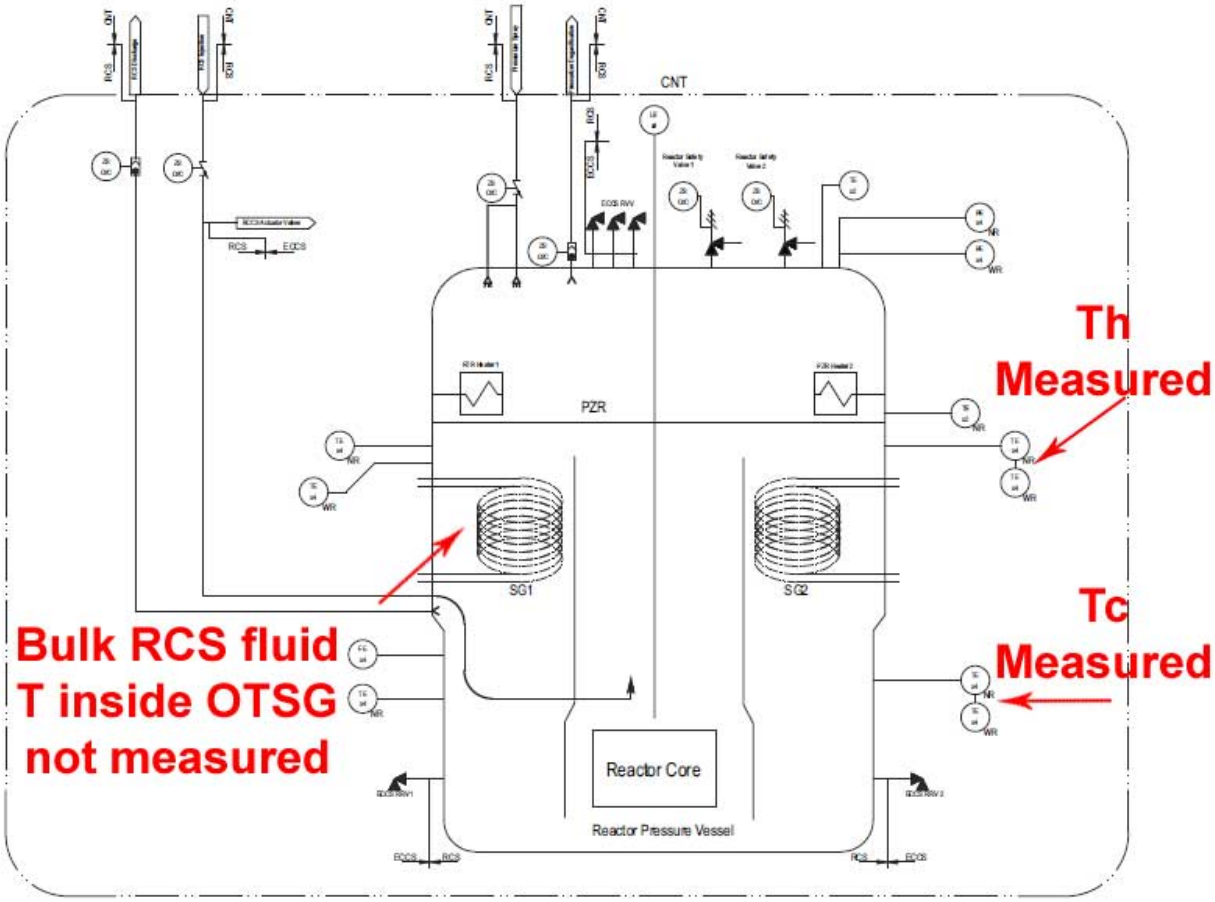

When the MFW Flow is reduced to an OTSG, and the Secondary Side water level starts to decrease (for NuScale OTSG, inside the tubes), the OTSG HT-X superheat region size starts to immediately increase in length. This means less heat is transferred **FROM** the bulk RCS fluid surrounding the OTSG tubes in that larger length HT-X region. Bottom line is the "cold side" T for natural circulation goes up. From just that affect, natural circulation flow rate has to go down. An extreme case example would be secondary side "dry out" from total Loss of MFW. In that case the RCS bulk fluid T around the OTSG tube bundle (inside the OTSG shell) would enter the OTSG shell at Th and exit the shell bottom <u>also at Th</u> since no heat would be removed inside the OTSG (the only OTSG HT-X region remaining would be a full-length superheat region…. I'll acknowledge it can transfer some heat).
NOTE WELL this RCS T change happens inside the OTSG shell before that hotter RCS water ever moves outside the OTSG to the Tc measuring instruments. In a B&W PWR with OTSGs

this is why RCS P and Pressurize L start immediately increasing (and I mean IMMEDIATELY) even before the Tc instruments (or an Operator) can see it… and is why a B&W PWR is so sensitive to decreases in MFW Flow. The actual T-ave increases as fast as the OTSG water L decreases. But it can't be seen until the water reaches the measuring instruments. It is also why (with the "old" pre-TMI2 setpoints) on B&W plants a PORV would lift EVEN IF the Reactor Tripped simultaneous with a TLOMFW signal.

This is one reason I am curious about the RCS Loop Transport Time for the NuScale Unit…. hotter RCS water has to get all the way to the Th measurement to trip the Reactor on a 'reduction in MFW Flow'. The hotter water also has an effect on the ex-core NI reading as soon as it travels to the core region of the Pressure Vessel because neutron leakage will increase, depending on plant conditions when the NIs were calibrated to a calorimetric.

Another view:

Figure 5.1-3: Reactor Coolant System Schematic Flow Diagram

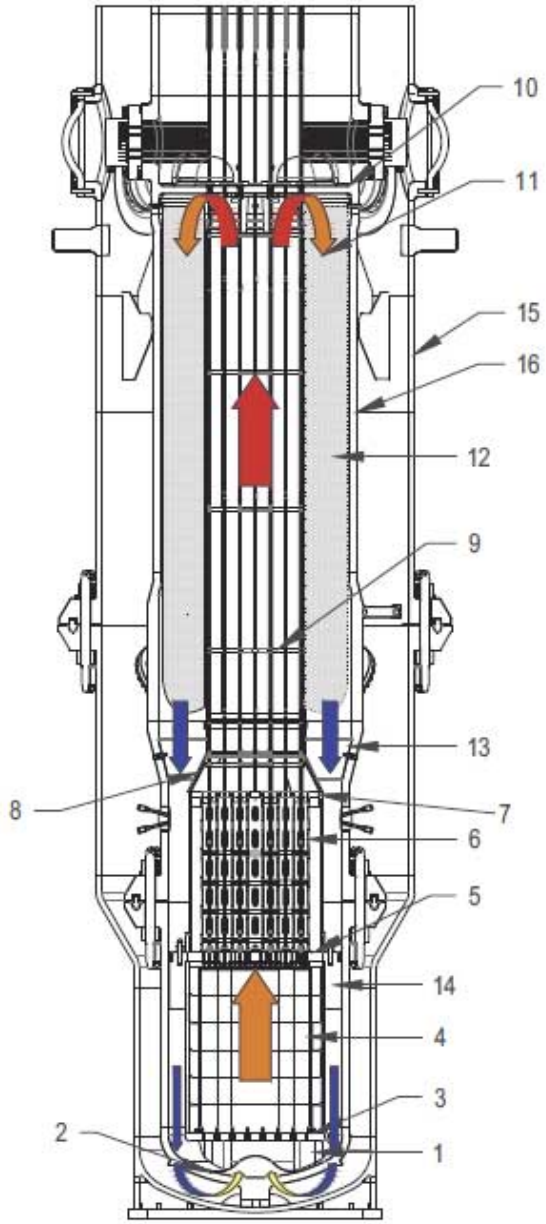

No.	Stage
1	Core support blocks in downcomer
2	Downcomer to lower plenum turn
3	Lower core plate
4	Core
5	Upper core plate
6	Control rod assembly guide tubes
7	Control rod assembly guide tube support plate
8	Riser transition
9	Control rod drive shaft support
10	Pressurizer baffle
11	Upper riser turn to annulus
12	Downcomer through steam generator
13	Downcomer transition
14	Upper core support blocks
15	Containment vessel
16	Reactor vessel

Th is measured up by #11, Tc is measured down by #13, the "cold side' T for natural circ is the T at #12 (not measured), the "hot side" T for natural circ is the T at the fat red arrow in the riser section. When MFW Flow decreases (or is totally lost as in the SA) and the RCS T at #12 starts to increase, the driving force for natural circ decreases and that flow must go down! Yet it is not discussed in the SA for "Reduction in MFW Flow'.

Further, FSAR Figure 15.2-30:

Figure 15.2-30: Reactor Coolant System Flowrate - Peak RCS Pressure Case (15.2.7 Loss of Feedwater)

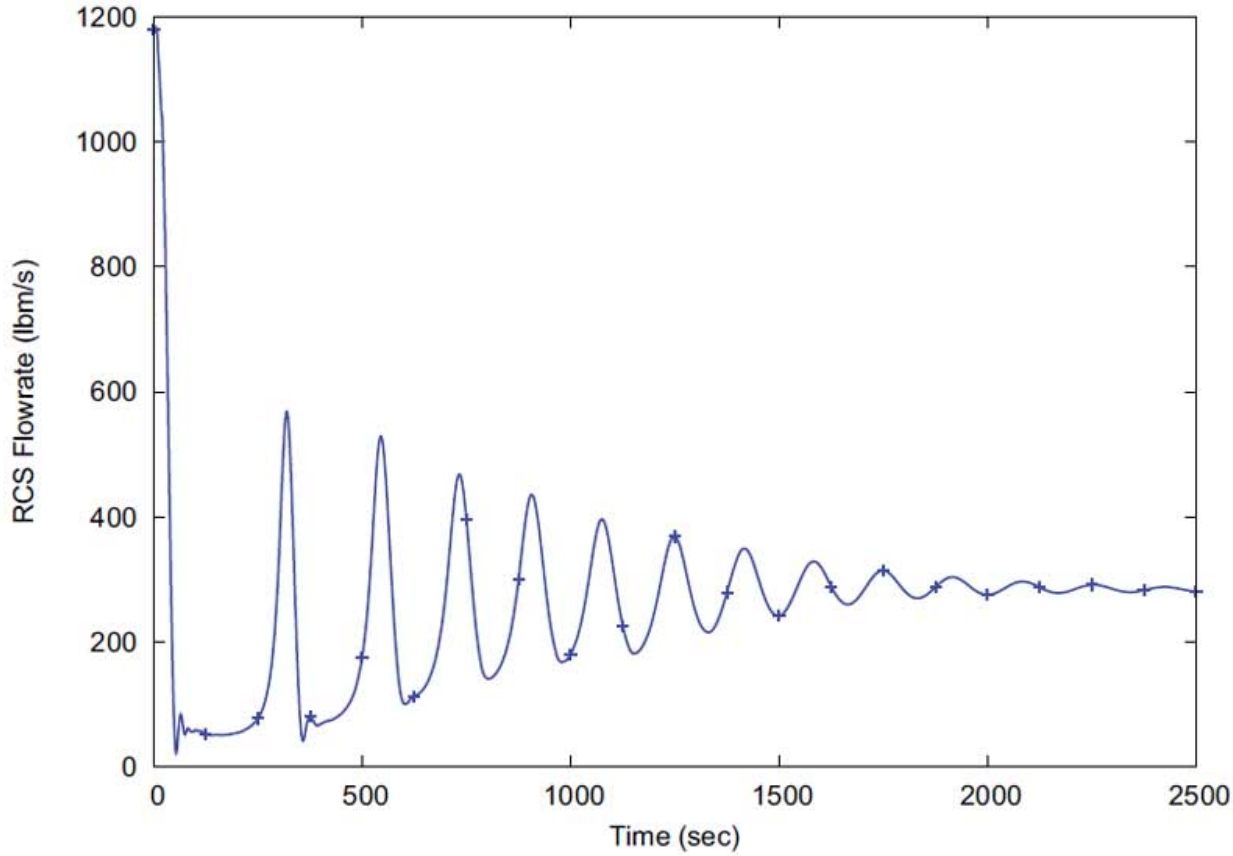

From **FSAR 15.2.7.3.3**:
"RCS flow (Figure 15.2-30) drops initially due to the reactor trip and stabilizes as DHRS flow is established.
This statement implies (and shows) RCS flow only decreases due to the Reactor Trip, 18 seconds after the event initiator **(FSAR Table 15.2-20)**, not the loss of the natural circ driving head due the bulk fluid RCS T increase within the OTSG shell heat sink from the Secondary side dry-out after the 100% TLOMFW initiator. Eighteen seconds is more than enough time to change the Ts driving the delta-P for natural circ, and affecting natural circ flow well before the Reactor Trip. After all… some RCS Ts <u>must be changing in these 18 seconds</u>…. as the Pressurizer in-surges enough from RCS heat-up expansion to terminate the event on an HP trip!

I don't think THIS OPERATOR believes RCS natural circ flow doesn't change before the Reactor Trip, based on just the discussion in this FSAR Section. Either the event is not being thoroughly explained in the text, or the NRELAP code is bogus.

In my wildest imagination I might conjure up an explanation claiming that as RCS bulk T inside the OTSG shell increases due to loss of Secondary heat sink, and as natural circ flow "tries" to decrease, it causes Reactor core flow to decrease causing a corresponding increase on the "hot side" T… and then "a miracle occurs" and magically the delta-P driving force for natural circ stays constant so the flow stays constant. If true an Operator needs to know that.

But I don’t think Occam would believe that explanation either.

Thanks for your time and consideration,
Mike Derivan.