PennState

Neil A. Sharkey
Vice President for Research
The Pennsylvania State University
304 Old Main
University Park, PA 16802-1504

814-865-6332
Fax: 814-863-9659
nas9@psu.edu
www.psu.edu/research

US Nuclear Regulatory Commission
ATTN: Document Control Desk
Washington, DC 20555-0001

March 26, 2019

Re: License Amendment Request, License R-2, Docket 50-005

To Whom It May Concern,

Attached please find a request for the modification of the Penn State Breazeale Reactor operating license, # R-2. This amendment will allow for the improvement of the reactor ventilation systems via the addition of a Reactor Bay Heating Ventilation and Exhaust System (RBHVES), which is intended to improve the economy of heating and cooling the reactor bay. The existing facility exhaust system (FES) will remain and will operate as a component of the RBHVES. A license amendment is necessary to support several revisions to the Technical Specifications which will be necessary in order to allow the RBHVES to be used as the primary exhaust system. In addition to revising the Technical Specifications, updated versions of Chapter 6 - Engineered Safety Features and Chapter 9 - Auxiliary Systems of the Safety Analysis Report have been prepared and are included as part of this LAR.

A similar license amendment request had been previously submitted in 2012 (see accession # ML12040A166), but was withdrawn on 25 June 2018 following three rounds of Requests for Additional Information (RAIs). The intent of withdrawing the prior LAR and resubmitting is to submit a more acceptable request without the burden of carrying forward responses to each additional RAI line item. The scope of the change requested in this LAR is significantly reduced in comparison to the RAI submitted in 2012.

Included in this submittal please find:

- A description of the changes to the ventilation system;
- A summary table for each change to the Technical Specifications;
- A more detailed description and justification for performing each change to the Technical Specifications;
- Updated Chapter 6 of the Safety Analysis Report (SAR), markup copy;
- Updated Chapter 6 of the SAR, clean copy;
- Updated Chapter 9 of the SAR, markup copy;
- Updated Chapter 9 of the SAR, clean copy
- Updated Technical Specifications, markup copy;
- Updated Technical Specifications, clean copy.

A020
NRR

Questions about this submittal should be directed to Dr. Jeffrey Geuther, Associate Director for Operations. Please exempt this request from fees per 10CFR170.11.a(4).

I declare under penalty of perjury that the foregoing is true and correct.

Executed on 3/28/19

Sincerely,

Neil Sharkey
Vice President for Research
Pennsylvania State University

Attachments:

- Evaluation of the Proposed Change
- Technical Specification Change Detail and Description
- Updated Chapter 6 of the SAR
- Updated Technical Specifications, Markup Copy
- Updated Technical Specifications, Clean Copy

cc: (electronic)

- Duane Hardesty (NRC)
- William Schuster (NRC)
- Xiaosong Yin (NRC)
- Willam Kennedy (NRC)

Signed and sworn to before me on March 28, 2019
by Neil A. Sharkey.

Angelita Kay Johnson
Notary
My commision expires: 7/18/21

COMMONWEALTH OF PENNSYLVANIA
NOTARIAL SEAL
Angelita Kay Johnson, Notary Public
State College Boro, Centre County
My Commission Expires July 18, 2021

Evaluation of the Proposed Change

This amendment request supports the addition of a Reactor Bay Heating Ventilation and Exhaust System (RBHVES) to the reactor bay air handling infrastructure. Following the amendment, the RBHVES is intended to be the primary exhaust system during normal (non-emergency) operations. The Facility Exhaust System (FES) and Emergency Exhaust System (EES) referenced in the Technical Specifications will remain, and the FES will operate as a component of the RBHVES. Updates to the facility Technical Specifications are needed to be able to use the RBHVES to maintain negative differential pressure and to add appropriate surveillances to ensure the differential pressure reading is correct. The FES and EES may still be used when necessary, and the EES will remain the only exhaust system that is used during emergencies.

The PSU maximum hypothetical accident (MHA) is analyzed assuming a ground release, i.e., without the benefit of additional radionuclide dilution via elevated exhaust stacks, either in normal or emergency conditions. (The normal and emergency exhaust systems discharge 34 feet from the reactor bay floor, but no credit for this is taken for elevated release in the SAR). However, the reactor bay is maintained at negative differential pressure as an ALARA precaution and as a means of satisfying the definition of confinement: "an enclosure on the overall facility which controls the movement of air into it and out through a controlled path (TS 1.1.8)." In other words, negative pressure is used to control the flow of air into the reactor bay and out through the roof. Modifications to the exhaust system change this path, but do not affect the validity of the SAR analysis or introduce unanalyzed accident scenarios.

In the original design, the reactor bay is kept at negative differential pressure via the use of two facility exhaust fans, comprising the facility exhaust system (FES). These fans exhaust via penetrations in the bay roof. The FES exhaust dampers are closed by gravity / backdraft when power to the fans is shut off. The upgraded reactor bay heating ventilation and exhaust system (RBHVES) is intended to be used along with the existing FES fans, which may either be on or off depending on the RBHVES operating mode.

The RBHVES contains an additional exhaust fan and stack that exhausts at reactor bay roof level (i.e., lower than the FES and EES exhaust), a makeup fan with an enthalpy wheel, a recirculation fan, and associated control dampers. Confinement penetration dampers close to isolate the system on system shutdown or power failure. During normal operation using the RBHVES the balance of fresh makeup air and exhaust air maintains a slight negative pressure in the reactor bay. (A system drawing is included in the revised SAR Chapter 6 as Figure 6-1).

In the design of the RBHVES, for energy efficiency under certain weather conditions, an economizer mode was included. In the economizer mode (briefly described in the original submittal), the two existing roof fans are started and the economizer air damper is opened to provide makeup air without the need for air conditioning. As long as the reactor bay is at negative differential pressure relative to the ambient pressure, air will be drawn in through

the makeup air damper to replace air removed by the roof fans. This mode of operation (when enabled) is anticipated to save cooling cost under limited ambient air conditions.

The economizer air and relief dampers are located on the roof of RSEC west wing (laboratory wing attached to and west of the reactor bay). The dampers communicate with the outside air at this intermediary roof height of about 15 feet above the reactor bay floor. As with the FES roof fan dampers, when the dampers are open, air could flow in either direction based on local static and dynamic pressures. When the dampers are closed only minor leakage (in or out) can occur. These are not intended release points. When the system is shutdown, the confinement dampers isolate the economizer and relief dampers from the confinement. With the system operating, the relief damper is closed and the economizer damper may be open. Discharge through the economizer damper is not expected due to negative pressure caused by the operating roof fans. The damper position is controlled by the RBHVES control system. The confinement dampers fail closed upon loss of power and are driven closed by energy stored in a capacitive storage device. The reactor operator can quickly close the confinement dampers by depressing the RBHVES shutdown button in the control room (Figure 1).

Figure 1 - RBHVES emergency shutdown button, located in the control room

A relief damper is present in the RBHVES system to provide duct work protection from the dynamic load caused by the rapid closure of the confinement isolation dampers. To simplify the reliability of the interface between the RBHVES control system and the emergency evacuation system, the only communication is through a set of auxiliary contacts on a multiplier relay in the emergency evacuation system. When the evacuation system is actuated, an evacuation system relay opens contacts that interrupt the control power from the RBHVES system to the confinement damper actuators. Without power the dampers fail to the closed position. The RBHVES trips the exhaust supply and recirculation fans and opens the relief damper.

The RBHVES serves no safety function during an airborne release. When the evacuation alarm system is activated, any operating RBHVES fans are shut down, associated motor-driven confinement isolation dampers shut in approximately five seconds, and the EES system starts. (The FES, if operating, also automatically shuts down during an evacuation). Note that the EES system is not affected by the changes discussed in this LAR. The penetrations and ductwork added by RBHVES are similar in size to the existing roof fan penetrations that communicate directly with outside air. With the ventilation fans operating as designed, the ductwork becomes part of the confinement, as defined in TS. During an evacuation, the control air path is isolated from the remainder of the confinement by design. The failure of the system to isolate is bounded by the maximum hypothetical accident (MHA) in the SAR, which assumed that effluents were released at ground level with no filter.

Historically, FES fan status has been verified as part of the daily pre-operation checkout by visually observing rotating fan blades and open dampers, in lieu of a direct measurement of differential pressure. This visual check is in addition to a DCC-X FES FAN OFF scram (SAR 7.3.1.3). This FAN OFF scram is not required by TS and will be removed following the approval of this application.

The RBHVES includes a differential pressure indicator lamp that is read by the reactor operator every hour as part of routine logs. This indicator lamp is extinguished if any one of three differential pressure transducers reads low differential pressure (i.e., DP greater than -0.01" H_2O). The indication of loss of pressure is not immediate. A timer, typically set to five minutes, is used to ensure that the loss of pressure signal is not a false positive. Upon observing the loss of negative pressure as indicated by the RBHVES indicator lamps, the reactor operator is expected to consult the duty SRO, who will be responsible for troubleshooting and rectifying the loss of normal function. The revised TS allow for one hour of operation following the discovery of loss of normal negative differential pressure after which the reactor must be shut down. The SRO's actions may include ensuring reactor bay doors are closed, starting additional fans (such as FES), shutting down RBHVES, or other system maintenance. The quickest action would be for the operator to secure power to the RBHVES using a red pushbutton in the control room. Following loss of RBHVES power, the FES would automatically be energized and would restore negative differential pressure. The SRO could also toggle the FES control switches (Figure 2) to ON in order to ensure that the FES is operating regardless of RBHVES mode.

Figure 2 - FES control switches, located in the reactor bay

A new calibration requirement has been added to the proposed Technical Specifications to ensure that the differential pressure transducers are calibrated annually. The hourly reading of the differential pressure indicator lamp by the operator is preferred to an automatic scram (as with the optional FES power scram) because differential pressure may be temporarily negated by opening bay doors for large tour groups or other routine causes, and therefore an added DCC-X scram based on differential pressure may cause a significant increase in unintentional reactor trips. (The timer in the DP lamp logic should avoid changes in indication for personnel access through doors. However, the timer setting can be changed by offsite personnel with access to the supervisory control software and therefore DP should not be used for reactor trips).

Technical Specification Change Summary Table

The following changes to the Technical Specifications are proposed:

#	Affected Section of TS	Description	Justification
1	All	Editorial - page numbers in TOC and footers may be changed.	Changes to the Technical Specifications have affected the length of some sections.
2	3.1.1.b basis	Changed SAR reference to Ch. 13, Section B	The listed reference (Ch. 13 Sec. C) was incorrect.
3	3.5 title	The title was changed to "Engineered Safety Features – Ventilation Systems"	This title is more generic and refers to the previously-installed exhaust systems as well as the new Reactor Bay Heating Ventilation and Exhaust System.
4	3.5.a 3.5.a (basis) 3.5.b (basis)	The requirement for one reactor facility exhaust fan to be operating whenever the reactor is not secured was replaced by a specification related to bay differential pressure.	The intent of the specification is to ensure that reactor bay differential pressure is negative. The revised TS recognize that the FES are not the only component of the upgraded exhaust system, and negative differential pressure may be attained with or without the FES. The basis section was updated to reflect this change and to include the basis for a 1 hr window to restore negative DP upon discovery of no negative DP. The basis for 3.5.b was updated to clarify which exhaust systems were credited with performing certain functions.

5	3.5.c 3.5.c (basis)	The specification was amended to require fuel handling to cease in a safe manner upon discover of lost reactor bay exhaust / EES operability.	The previous requirement, that the FES must be operating and EES must be operable, would cause immediate non-compliance if the exhaust system were to trip off during fuel handling. Additionally, the phrasing of the specification was made more generic to refer to the new RBHVES, not necessarily the FES. The basis for 3.5.c was updated to document the reason for the new phrasing.
6	3.6.1 3.6.1.b (basis)	Changed name of Beamhole Laboratory Monitor to "Neutron Beam Laboratory Monitor"	This was done to be consistent with commonly-used terminology at the facility.
7	4.5	Title change from "Facility Exhaust and Emergency Exhaust Systems" to "Ventilation Systems"	This was done to make the section more generic and to refer to the new RBHVES in addition to extant systems.
8	4.5	References to the facility exhaust system were replaced with references to the "reactor bay heating ventilation and exhaust" system	The FES is being upgraded to the RBHVES; the section was reworded to refer to the new system. This includes the monthly test requirement in TS 4.5.b.
9	4.5.c	A requirement was added to calibrate the differential pressure monitors annually, not to exceed 15 months.	The operation of the upgraded exhaust system is monitored by observing the status of an indicator lamp which is extinguished if any one of three DP transducers reads low negative differential pressure. Since these transducers are required to perform a safety function they must be calibrated.
10	4.6.1	Changed several instances of "Beamhole Laboratory Monitor" to "Neutron Beam Laboratory Monitor"	This was done to be consistent with commonly-used terminology at the facility.

11	5.5.b	Changed "facility exhaust system" to "reactor bay heating ventilation and exhaust system"	Refer to the RBHVES instead of the FES.
12	5.5.b	Added clarification that "secured" means "fans deenergized and exhaust dampers closed" when referring to RBHVES.	This was done to clarify the meaning of "secured," which is used in other contexts elsewhere in the TS, e.g., when referring to "reactor secured" or "secured experiments."
13	5.5 Basis	Added clarification that SAR MHA is analyzed as a ground release	This was done to avoid confusion regarding the fact that the EES / FES stack height is an ALARA feature and is not credited in the accident analysis.

Summary and Justification of Changes to the Facility Technical Specifications

General and Minor Clerical Changes

1. References to the "facility exhaust system" were changed to "reactor bay heating ventilation and exhaust system" throughout the Technical Specifications.

2. References to the "Beamhole Laboratory" were changed to "Neutron Beam Laboratory" to be consistent with common terminology at the facility and with other facility postings and procedures.

3. Page numbers have been updated as necessary.

TS 3.1.1.(b)

1. The basis for the power limit of 1.1 MWth in steady-state mode referred to the SAR, Chapter 13, Section C. This reference was incorrect and has been updated to SAR, Chapter 13, Section B. SAR 13.B evaluates the PSBR Limiting Safety System Setting with respect to a maximum reactor power of 1.15 MWth, bounding the 1.1 MWth LCO documented by TS 3.1.1(b).

TS 3.5

1. The title was changed from "Engineered Safety Features – Facility Exhaust System and Emergency Exhaust System" to "Engineered Safety Features - Ventilation

Systems" in order to be more generic and include the upgraded air handling system referred to as the Reactor Bay Heating Ventilation and Exhaust System.

2. The specification requiring one reactor bay exhaust fan to be operating during reactor operation was changed to incorporate an additional requirement that reactor bay differential pressure be negative and to include a one-hour repair window following the discovery of the problem in order to give reactor operators time to identify and repair the issue. Reactor operators take hourly electronic logs of a comprehensive set of operating parameters, including the differential pressure as indicated by the RBHVES. Therefore, any loss of differential pressure would be quickly identified by the reactor staff. Note that hourly logs are not taken during fuel handling. The fuel handling procedure (SOP-3) requires that at least one FES fan be ON during fuel handling operations. Upon approval of this LAR, a requirement to perform hourly checks of the RBHVES status lamps will be added to the fuel handling procedure to ensure prompt identification of RBHVES failure, and the requirement to ensure one FES fan ON will be removed.

   The RBHVES indicator shows loss of negative pressure when any one of three differential pressure sensors reads a differential pressure of > -0.01" H_2O. A specification for calibrating these sensors annually has been added, see "TS 4.5," below.

3. Guidance was added to immediately place fuel or fueled experiments in a safe storage location if the RBHVES or EES were discovered to be inoperable. This change clarifies how the facility will comply with the TS in the event that the ventilation systems become inoperable during fuel movement. Instead of immediately being in violation of the TS, the fuel handlers are required to immediately secure the movement by placing the fuel in a safe storage location, which is the most appropriate immediate action following the discovery that either RBHVES or EES are inoperable.

   Note that the fuel handling procedure requires a functional test of the EES prior to fuel handling and for at least one FES fan to be energized. Upon approval of this LAR, a requirement to perform hourly checks of the RBHVES status lamps will be added to the fuel handling procedure to ensure prompt identification of RBHVES failure, and the requirement to ensure one FES fan ON will be removed.

TS 4.5

1. The title of this section was changed from "Facility Exhaust System and Emergency Exhaust System" to "Ventilation Systems" in order to be more generic and include the upgraded air handling system referred to as the Reactor Bay Heating Ventilation and Exhaust System.

2. A specification was added to require the annual calibration of the reactor bay negative differential pressure sensors, not to exceed 15 months. This specification is in line with the calibration frequency for other TS-required instruments and was verified to be acceptable via phone conversations with the vendor of the product used at the facility. The reactor differential pressure is currently measured using three Setra M260 Multi-Sense differential pressure transducers. A loss of negative differential pressure as indicated by one of these transducers would cause the RBHVES differential pressure indicator lamp to be extinguished, and would be noted by the reactor operator when they record hourly electronic logs, if not sooner.

TS 5.5

1. The statement that, upon a building evacuation alarm, the reactor bay exhaust system would be automatically "secured" was revised to clarify that "secured" means "fans deenergized and exhaust dampers closed." This was done to eliminate confusion with regard to the definition of "secured," which is also used in the Technical Specifications to refer to "secured experiments" and "reactor secured."

2. The basis for TS 5.5 was updated to explicitly state that the SAR MHA does not take credit for an elevated release. There has been no change to the SAR methodology, but the basis stated that "the height above the ground of the release helps to ensure adequate mixing prior to possible public exposure" without stating that no credit was taken for mixing in the SAR analysis.

Summary of Additional Changes to the SAR

Updates to SAR Chapter 6: Engineered Safety Features and Chapter 9: Auxiliary Systems are attached. These updated chapters reflect changes to the exhaust system submitted for consideration as part of this LAR. In some cases, other changes not related to this LAR are included in the updated SAR chapters. Specifically:

- The exhaust height in SAR 6.1: Summary Description had previously been documented as "approximately 24 feet above ground level." This has been changed to "at least 24 feet off the ground" to be consistent with TS 5.5.b.
- Section 9.7.2 was updated to reflect changes to the liquid radioactive waste treatment infrastructure at the RSEC.

These additional changes unrelated to the RBHVES amendment do not require an amendment to the facility license.

FACILITY OPERATING LICENSE R-2

APPENDIX A

TECHNICAL SPECIFICATIONS
FOR THE
PENNSYLVANIA STATE UNIVERSITY
BREAZEALE REACTOR

DOCKET NO. 50-005

~~NOVEMBER 2009~~MARCH 2019

1.0 INTRODUCTION

Included in this document are the Technical Specifications (TS) and the Bases for the Technical Specifications. These Bases, which provide the technical support for the individual technical specifications, are included for information purposes only. They are not part of the Technical Specifications and they do not constitute limitations or requirements to which the licensee must adhere.

1.1 Definitions

1.1.1 ALARA

The ALARA (As Low As Reasonably Achievable) program is a program for maintaining occupational exposures to radiation and release of radioactive effluents to the environs as low as reasonably achievable.

1.1.2 Automatic Control

Automatic control mode operation is when normal reactor operations, including start up, power level change, power regulation, and protective power reductions are performed by the reactor control system without, or with minimal, operator intervention.

1.1.3 Channel

A channel is the combination of sensor, line, amplifier, and output devices which are connected for the purpose of measuring the value of a parameter.

1.1.4 Channel Calibration

A channel calibration is an adjustment of the channel such that its output responds, with acceptable range, and accuracy, to known values of the parameter which the channel measures. Calibration SHALL encompass the entire channel, including equipment actuation, alarm, or trip, and SHALL be deemed to include a Channel Test.

1.1.5 Channel Check

A channel check is a qualitative verification of acceptable performance by observation of channel behavior. This verification, where possible, SHALL include comparison of the channel with other independent channels or systems measuring the same variable.

1.1.6 Channel Test

A channel test is the introduction of a signal into the channel to verify that it is operable.

1.1.7 Cold Critical

Cold critical is the condition of the reactor when it is critical with the fuel and bulk water temperatures both below 100°F (37.8°C).

1.1.8 Confinement

Confinement means an enclosure on the overall facility which controls the movement of air into it and out through a controlled path.

1.1.9 Excess Reactivity

Excess reactivity is that amount of reactivity that would exist if all control rods (safety, regulating, etc.) were moved to the maximum reactive condition from the point where the reactor is exactly critical (keff=1 (one)) in the reference core condition.

1.1.10 Experiment

Experiment SHALL mean (a) any apparatus, device, or material which is not a normal part of the core or experimental facilities, but which is inserted in these facilities or is in line with a beam of radiation originating from the reactor core; or (b) any operation designed to measure reactor parameters or characteristics.

1.1.11 Experimental Facility

Experimental facility SHALL mean beam port, including extension tube with shields, thermal column with shields, vertical tube, central thimble, in-core irradiation holder, pneumatic transfer system, and in-pool irradiation facility.

1.1.12 Instrumented Element

An instrumented element is a TRIGA fuel element in which sheathed chromel-alumel or equivalent thermocouples are embedded in the fuel.

1.1.13 Limiting Conditions for Operation

Limiting conditions for operation of the reactor are those constraints included in the Technical Specifications that are required for safe operation of the facility. These limiting conditions are applicable only when the reactor is operating unless otherwise specified.

1.1.14 Limiting Safety System Setting

A limiting safety system setting (LSSS) is a setting for an automatic protective device related to a variable having a significant safety function.

1.1.15 Manual Control

Manual control mode is operation of the reactor with the power level controlled by the operator adjusting the control rod positions.

1.1.16 Maximum Elemental Power Density

The maximum elemental power density (MEPD) is the power density of the element in the core producing more power than any other element in that loading. The power density of an element is the total power of the core divided by the number of fuel elements in the core multiplied by the normalized power of that element. This definition is only applicable for non-pulse operation.

1.1.17 Maximum Power Level

Maximum Power Level is the maximum measured value of reactor power for non-pulse operation.

1.1.18 Measured Value

The measured value is the value of a parameter as it appears on the output of a channel.

1.1.19 Movable Experiment

A movable experiment is one where it is intended that the entire experiment may be moved in or near the core or into and out of the reactor while the reactor is operating.

1.1.20 Normalized Power

The normalized power, NP, is the ratio of the power of a fuel element to the average power per fuel element.

1.1.21 Operable

Operable means a component or system is capable of performing its intended function.

1.1.22 Operating

Operating means a component or system is performing its intended function.

1.1.23 Pulse Mode

Pulse mode operation SHALL mean operation of the reactor allowing the operator to insert preselected reactivity by the ejection of the transient rod.

1.1.24 Reactivity Limits

The reactivity limits are those limits imposed on reactor core reactivity. Quantities are referenced to a reference core condition.

1.1.25 Reactivity Worth of an Experiment

The reactivity worth of an experiment is the maximum absolute value of the reactivity change that would occur as a result of intended or anticipated changes or credible malfunctions that alter experiment position or configuration.

1.1.26 Reactor Control System

The reactor control system is composed of control and operational interlocks, reactivity adjustment controls, flow and temperature controls, and display systems which permit the operator to operate the reactor reliably in its allowed modes.

1.1.27 Reactor Interlock

A reactor interlock is a device which prevents some action, associated with reactor operation, until certain reactor operation conditions are satisfied.

1.1.28 Reactor Operating

The reactor is operating whenever it is not secured or shutdown.

1.1.29 Reactor Secured

The reactor is secured when:

a. It contains insufficient fissile material or moderator present in the reactor, adjacent experiments, or control rods, to attain criticality under optimum available conditions of moderation, and reflection, or

b. A combination of the following:

1) The minimum number of neutron absorbing control rods are fully inserted or other safety devices are in shutdown positions, as required by technical specifications, and

2) The console key switch is in the off position and the key is removed from the lock, and

3) No work is in progress involving core fuel, core structure, installed control rods, or control rod drives unless they are physically decoupled from the control rods, and

4) No experiments in or near the reactor are being moved or serviced that have, on movement, a reactivity worth exceeding the maximum value allowed for a single experiment or one dollar whichever is smaller.

1.1.30 Reactor Shutdown

The reactor is shutdown if it is subcritical by at least one dollar in the reference core condition and the reactivity worth of all experiments is included.

1.1.31 Reactor Safety System

Reactor safety systems are those systems, including their associated input channels, which are designed to initiate automatic reactor protection or to provide information for initiation of manual protective action.

1.1.32 Reference Core Condition

The condition of the core when it is at ambient temperature (cold) and the reactivity worth of xenon is negligible (<0.21% $\Delta k/k$ (~$0.30)).

1.1.33 Research Reactor

A research reactor is defined as a device designed to support a self-sustaining neutron chain reaction for research, development, educational, training, or experimental purposes, and which may have provisions for the production of radioisotopes.

1.1.34 Reportable Occurrence

A reportable occurrence is any of the following which occurs during reactor operation:

a. Operation with the safety system setting less conservative than specified in TS 2.2, Limiting Safety System Setting.

b. Operation in violation of a limiting condition for operation.

c. Failure of a required reactor safety system component which could render the system incapable of performing its intended safety function.

d. Any unanticipated or uncontrolled change in reactivity greater than one dollar.

e. An observed inadequacy in the implementation of either administrative or procedural controls which could result in operation of the reactor outside the limiting conditions for operation.

f. Release of fission products from a fuel element.

g. Abnormal and significant degradation in reactor fuel, cladding, coolant boundary or confinement boundary that could result in exceeding 10 CFR Part 20 exposure criteria.

1.1.35 Rod-Transient

The transient rod is a control rod with SCRAM capabilities that is capable of providing rapid reactivity insertion for use in either pulse or square wave mode of operation.

1.1.36 Safety Limit

Safety limits are limits on important process variables which are found to be necessary to reasonably protect the integrity of certain physical barriers which guard against the uncontrolled release of radioactivity. The principal physical barrier is the fuel element cladding.

1.1.37 SCRAM Time

SCRAM time is the elapsed time between reaching a limiting safety system set point and a specified control rod movement.

1.1.38 Secured Experiment

A secured experiment is any experiment, experimental facility, or component of an experiment that is held in a stationary position relative to the reactor by mechanical means. The restraining forces must be substantially greater than those to which the experiment might be subjected to by hydraulic, pneumatic, buoyant, or other forces which are normal to the operating environment of the experiment, or by forces which can arise as a result of credible malfunctions.

1.1.39 Secured Experiment with Movable Parts

A secured experiment with movable parts is one that contains parts that are intended to be moved while the reactor is operating.

1.1.40 Shall, Should, and May

The word "shall" is used to denote a requirement; the word "should" to denote a recommendation; and the word "may" to denote permission, neither a requirement nor a recommendation.

1.1.41 Shim, Regulating, and Safety Rods

A shim, regulating, or safety rod is a control rod having an electric motor drive and SCRAM capabilities. It has a fueled follower section.

1.1.42 Shutdown Margin

Shutdown margin SHALL mean the minimum shutdown reactivity necessary to provide confidence that the reactor can be made subcritical by means of the control and safety systems starting from any permissible operating condition although the most reactive rod is in its most reactive position, and that the reactor will remain subcritical without further operator action.

1.1.43 Square Wave Mode

Square wave (SW) mode operation SHALL mean operation of the reactor allowing the operator to insert preselected reactivity by the ejection of the transient rod, and which results in a maximum power within the license limit.

1.1.44 Steady State Power Level

Steady state power level is the nominal measured value of reactor power to which reactor power is being controlled whether by manual or automatic actions. Minor variations about this level may occur due to noise, normal signal variation, and reactivity adjustments. During manual, automatic, or square wave modes of operation, some initial, momentary overshoot may occur.

1.1.45 TRIGA Fuel Element

A TRIGA fuel element is a single TRIGA fuel rod of standard type, either 8.5 wt% U-ZrH in stainless steel cladding or 12 wt% U-ZrH in stainless steel cladding enriched to less than 20% uranium-235.

1.1.46 Watchdog Circuit

A watchdog circuit is a circuit consisting of a timer and a relay. The timer energizes the relay as long as it is reset prior to the expiration of the timing interval. If it is not reset within the timing interval, the relay will de-energize thereby causing a SCRAM.

2.0 SAFETY LIMIT AND LIMITING SAFETY SYSTEM SETTING

2.1 Safety Limit - Fuel Element Temperature

Applicability

The safety limit specification applies to the maximum temperature in the reactor fuel.

Objective

The objective is to define the maximum fuel element temperature that can be permitted with confidence that no damage to the fuel element and/or cladding will result.

Specification

The temperature in a water-cooled TRIGA fuel element SHALL NOT exceed 1150°C under any operating condition.

Basis

The important parameter for a TRIGA reactor is the fuel element temperature. This parameter is well suited as a single specification especially since it can be measured at a point within the fuel element and the relationship between the measured and actual temperature is well characterized analytically. A loss in the integrity of the fuel element cladding could arise from a build-up of excessive pressure between the fuel-moderator and the cladding if the maximum fuel temperature exceeds 1150°C. The pressure is caused by the presence of air, fission product gases, and hydrogen from the dissociation of the hydrogen and zirconium in the fuel-moderator. The magnitude of this pressure is determined by the fuel-moderator temperature, the ratio of hydrogen to zirconium in the alloy, and the rate change in the pressure.

The safety limit for the standard TRIGA fuel is based on data, including the large mass of experimental evidence obtained during high performance reactor tests on this fuel. These data indicate that the stress in the cladding due to the increase in the hydrogen pressure from the dissociation of zirconium hydride will remain below
the ultimate stress provided that the temperature of the fuel does not exceed 1150°C and the fuel cladding is below 500°C. See Safety Analysis Report, Ref. 13 and 30 in Section 13 and Simnad, M.T., F.C. Foushee, and G.B. West, "Fuel Elements for Pulsed Reactors," Nucl. Technology, Vol. 28, p. 31-56 (January 1976).

2.2 Limiting Safety System Setting (LSSS)

Applicability

The LSSS specification applies to the SCRAM setting which prevents the safety limit from being reached.

Objective

The objective is to prevent the safety limit (1150°C) from being reached.

Specification

The limiting safety system setting SHALL be a maximum of 650°C as measured with an instrumented fuel element if it is located in a core position representative of the maximum elemental power density (MEPD) in that loading. If it is not practical to locate the instrumented fuel in such a position, the LSSS SHALL be reduced. The reduction of the LSSS SHALL be by a ratio based on the calculated linear relationship between the normalized power at the monitored position as compared to normalized power at the core position representative of the MEPD in that loading.

Basis

The limiting safety system setting is a temperature which, if reached, SHALL cause a reactor SCRAM to be initiated preventing the safety limit from being exceeded. Experiments and analyses described in the Safety Analysis Report, Section 13 - Accident Analysis, show that the measured fuel temperature at steady state power has a simple linear relationship to the normalized power of a fuel element in the core. Maximum fuel temperature occurs when an instrumented element is in a core position of MEPD. The actual location of the instrumented element and the associated LSSS SHALL be chosen by calculation and/or experiment prior to going to maximum reactor operational power level. The measured fuel temperature during steady state operation is close to the maximum fuel temperature in that element. Thus, 500°C of safety margin exists before the 1150°C safety limit is reached. This safety margin provides adequate compensation for variations in the temperature profile of depleted and differently loaded fuel elements (i.e. 8.5 wt% vs. 12 wt% fuel elements). See Safety Analysis Report, Chapter 13.

If it is not practical to place an instrumented element in the position representative of MEPD the LSSS SHALL be reduced to maintain the 500°C safety margin between the 1150°C safety limit and the highest fuel temperature in the core if it was being measured. The reduction ratio SHALL be determined by calculation using the accepted techniques used in Safety Analysis Report, Chapter 13.

In the pulse mode of operation, the same LSSS SHALL apply. However, the temperature channel will have no effect on limiting the peak power or fuel temperature, generated, because of its relatively long time constant (seconds), compared with the width of the pulse (milliseconds).

3.0 LIMITING CONDITIONS FOR OPERATION

The limiting conditions for operation as set forth in this section are applicable only when the reactor is operating. They need not be met when the reactor is shutdown unless specified otherwise.

3.1 Reactor Core Parameters

3.1.1 Non-Pulse Mode Operation

Applicability

These specifications apply to the power generated during manual control mode, automatic control mode, and square wave mode operations.

Objective

The objective is to limit the source term and energy production to that used in the Safety Analysis Report.

Specifications

a. The reactor may be operated at steady state power levels of 1 MW (thermal) or less.

b. The maximum power level SHALL be no greater than 1.1 MW (thermal).

c. The steady state fuel temperature SHALL be a maximum of 650°C as measured with an instrumented fuel element if it is located in a core position representative of MEPD in that loading. If it is not practical to locate the instrumented fuel in such a position, the steady state fuel temperature SHALL be calculated by a ratio based on the calculated linear relationship between the normalized power at the monitored position as compared to normalized power at the core position representative of the MEPD in that loading. In this case, the measured steady state fuel temperature SHALL be limited such that the calculated steady state fuel temperature at the core position representative of the MEPD in that loading SHALL NOT exceed 650°C.

Basis

a. Thermal and hydraulic calculations and operational experience indicate that a compact TRIGA reactor core can be safely operated up to power levels of at least 1.15 MW (thermal) with natural convective cooling.

b. Operation at 1.1 MW (thermal) is within the bounds established by the SAR for steady state operations. See Chapter 13, Section B~~C~~ of the SAR.

c. Limiting the maximum steady state measured fuel temperature of any position to 650°C places an upper bound on the fission product release

fraction to that used in the analysis of a Maximum Hypothetical Accident (MHA). See Safety Analysis Report, Chapter 13.

3.1.2 Reactivity Limitation

Applicability

This specification applies to the reactivity condition of the reactor and the reactivity worth of control rods, experiments, and experimental facilities. It applies to all modes of operation.

Objective

The objective is to ensure that the reactor is operated within the limits analyzed in the Safety Analysis Report and to ensure that the safety limit will not be exceeded.

Specification

a. The maximum excess reactivity above cold, clean, critical plus samarium poison of the core configuration with experiments and experimental facilities in place SHALL be 4.9% $\Delta k/k$ (~$7.00).

b. During initial measurements of maximum excess reactivity for a new core/experimental configuration this specification is suspended provided the reactor is operated at power levels no greater than 1 kW. If the power level exceeds 1 kW, power SHALL be reduced to less than 1 kW within one minute. This exemption does not apply for the annual confirmatory measurement of excess reactivity required by TS 4.1.2.

Basis

Limiting the excess reactivity of the core to 4.9% $\Delta k/k$ (~$7.00) prevents the fuel temperature in the core from exceeding 1150°C under any assumed accident condition as described in the Safety Analysis Report, Chapter 13. The exemption allows the initial physics measurement of maximum excess reactivity for a new core/experimental configuration to be measured without creating a reportable occurrence. Maintaining the power level less that 1 kW during this exemption assures there is no challenge to the safety limit on fuel temperature.

3.1.3 Shutdown Margin

Applicability

This specification applies to the reactivity condition of the reactor and the reactivity worth of control rods, experiments, and experimental facilities. It applies to all modes of operation.

Objective

The objective is to ensure that the reactor can be shut down at all times and to ensure that the safety limit will not be exceeded.

Specification

The reactor SHALL NOT be operated unless the shutdown margin provided by control rods is greater than 0.175% Δk/k (~$0.25) with:

a. All movable experiments, experiments with movable parts and experimental facilities in their most reactive state, and

b. The highest reactivity worth control rod fully withdrawn.

Basis

A shutdown margin of 0.175% Δk/k (~$0.25) ensures that the reactor can be made subcritical from any operating condition even if the highest worth control rod should remain in the fully withdrawn position. The shutdown margin requirement may be more restrictive than TS 3.1.2.

3.1.4 Pulse Mode Operation

Applicability

These specifications apply to the energy generated in the reactor as a result of a pulse insertion of reactivity.

Objective

The objective is to ensure that the safety limit will not be exceeded during pulse mode operation.

Specifications

a. The stepped reactivity insertion for pulse operation SHALL NOT exceed 2.45% Δk/k (~$3.50) and the maximum worth of the poison section of the transient rod SHALL be limited to 2.45% Δk/k (~$3.50).

b. Pulses SHALL NOT be initiated from power levels above 1 kW.

Basis

a. Experiments and analyses described in the Safety Analysis Report, Chapter 13, show that the peak pulse temperatures can be predicted for new 12 wt% fuel placed in any core position. These experiments and analyses show that the maximum allowed pulse reactivity of 2.45% Δk/k (~$3.50), prevents the maximum fuel temperature from reaching the safety limit (1150°C) for any core configuration that meets the requirements of TS 3.1.5.

   The maximum worth of the pulse rod is limited to 2.45% Δk/k (~$3.50) to prevent exceeding the safety limit (1150°C) with an accidental ejection of the transient rod.

b. If a pulse is initiated from power levels below 1 kW, the maximum allowed full worth of the pulse rod can be used without exceeding the safety limit.

3.1.5 Core Configuration Limitation

Applicability

These specifications apply to all core configurations except as noted.

Objective

The objective is to ensure that the safety limit (1150°C) will not be exceeded due to power peaking effects in the various core configurations.

Specifications

a. The critical core SHALL be an assembly of either 8.5 wt% U-ZrH stainless steel clad or a mixture of 8.5 wt% and 12 wt% U-ZrH stainless steel clad TRIGA fuel-moderator elements placed in water with a 1.7-inch center line grid spacing.

b. The maximum calculated MEPD SHALL be less that 24.7 kW per fuel element for non-pulse operation.

c. The NP of any core loading with a maximum allowed pulse worth of 2.45% Δk/k (~$3.50) SHALL be limited to 2.2. IF the maximum allowed pulse worth is less than 2.45% Δk/k ($~3.50) for any given core loading (i.e. the pulse can be limited by the total worth of the transient rod, by the core excess, or administratively), THEN the maximum NP may be increased above 2.2 as long as the calculated maximum fuel temperature does not exceed the safety limit with that maximum allowed pulse worth and NP.

d. IF the maximum NP is increased above 2.2 as described in TS 3.1.5.c above, THEN the Insertion of Excess Reactivity analysis in the Safety Analysis Report SHALL be evaluated to ensure that the safety limit is not exceeded with the new conditions (See Safety Analysis Report, Chapter 13.1.2.).

e. The core SHALL NOT be configured such that a 12 wt% U-ZrH stainless steel clad TRIGA fuel-moderator element with a burnup less than a nominal 8000 MWD/Metric Ton of Uranium is located adjacent to a vacant (water-filled) internal core position during pulse mode operation.

Basis

a. The safety analysis is based on an assembly of either 8.5 wt% U-ZrH stainless steel clad or a mixture of 8.5 wt% and 12 wt% U-ZrH stainless steel clad TRIGA fuel-moderator elements placed in water with a 1.7-inch center line grid spacing.

b. Limiting the MEPD to 24.7 kW per element for non-pulse operation places an upper bound on the elemental heat production and the source term of the PSBR to that used in the analysis of a Loss Of Coolant Accident (LOCA) and Maximum Hypothetical Accident (MHA) respectively. See Safety Analysis Report, Chapter 13.

c. The maximum NP for a given core loading determines the peak pulse temperature with the maximum allowed pulse worth. If the maximum allowed pulse worth is reduced the maximum NP may be increased without exceeding the safety limit (1150°C). The amount of increase in the maximum NP allowed SHALL be calculated by an accepted method documented by an administratively approved procedure.

d. If the core loading deviates from the limits set in TS 3.1.5.c then revalidation of the Insertion of Excess Reactivity analysis in the Safety Analysis Report will ensure that the new loading does not inadvertently exceed the safety limit (See Safety Analysis Report, Chapter 13.1.2.).

e. Radial peaking effects in unirradiated 12 wt% U-ZrH stainless steel clad TRIGA fuel-moderator elements located adjacent to water-filled internal core position may cause a reduction in the safety margin during pulse mode operation with the maximum allowed pulse worth of 2.45% Δk/k (~$3.50) and the maximum allowed NP of 2.2. Locating an 8.5 wt% or moderately-irradiated (~8000 Megawatt Days per Metric Ton of Uranium) 12 wt% U-ZrH stainless steel clad TRIGA fuel-moderator element adjacent to vacant water-filled internal core positions provides additional safety margin. 12 wt% elements in the periphery of the core are not subject to this concern as the NP is too low to make these elements limiting.

3.1.6 TRIGA Fuel Elements

Applicability

These specifications apply to the mechanical condition of the fuel.

Objective

The objective is to ensure that the reactor is not operated with damaged fuel that might allow release of fission products.

Specifications

The reactor SHALL NOT be operated with damaged fuel except to detect and identify the fuel element for removal. A TRIGA fuel element SHALL be considered damaged and SHALL be removed from the core if:

a. In measuring the transverse bend, the bend exceeds the limit of 0.125 inch over the length of the cladding.

b. In measuring the elongation, its length exceeds its original length by 0.125 inch.

c. A clad defect exists as indicated by release of fission products.

Basis

a. The limit of transverse bend has been shown to result in no difficulty in disassembling the core. Analysis of the removal of heat from touching fuel elements shows that there will be no hot spots which cause damage to the fuel.

b. Experience with TRIGA reactors has shown that fuel element bending that could result in touching has occurred without deleterious effects. This is because (1) during steady state operation, the maximum fuel temperatures are at least 500°C below the safety limit (1150°C), and (2) during a pulse, the cladding temperatures remain well below their stress limit. The elongation limit has been specified to ensure that the cladding material will not be subjected to strains that could cause a loss of fuel integrity and to ensure adequate coolant flow.

3.2 Reactor Control and Reactor Safety System

3.2.1 Reactor Control Rods

Applicability

This specification applies to the reactor control rods.

Objective

The objective is to ensure that sufficient control rods are operable to maintain the reactor subcritical.

Specification

There SHALL be a minimum of three operable control rods in the reactor core.

Basis

The shutdown margin and excess reactivity specifications require that the reactor can be made subcritical with the most reactive control rod fully withdrawn. This specification helps ensure it.

3.2.2 Manual Control and Automatic Control

Applicability

This specification applies to the maximum reactivity insertion rate associated with movement of a standard control rod out of the core.

Objective

The objective is to ensure that adequate control of the reactor can be maintained during manual and 1, 2, or 3 rod automatic control.

Specification

The rate of reactivity insertion associated with movement of either the regulating, shim, or safety control rod SHALL be NOT greater than 0.63% Δk/k (~$0.90) per second when averaged over full rod travel. If the automatic control uses a combination of more than one rod, the sum of the reactivity of those rods SHALL be not greater than 0.63% Δk/k (~$0.90) per second when averaged over full travel.

Basis

The ram
accident analysis (refer to Safety Analysis Report, Chapter 13) indicates that the safety limit (1150°C) will not be exceeded if the reactivity addition rate is less than 1.75% Δk/k (~$2.50) per second, when averaged over full travel. This specification of 0.63% Δk/k (~$0.90) per second, when averaged over full travel, is well within that analysis.

3.2.3 Reactor Control System

Applicability

This specification applies to the information which must be available to the reactor operator during reactor operation.

Objective

The objective is to require that sufficient information is available to the operator to ensure safe operation of the reactor.

Specification

The reactor SHALL NOT be operated unless the measuring channels listed in Table 1 are operable. (Note that MN, AU, and SW are abbreviations for manual control mode, automatic control mode, and square wave mode, respectively).

Table 1
Measuring Channels

Measuring Channel	Min. No. Operable	Effective Mode MN, AU & SW	Effective Mode Pulse
Fuel Element Temperature	1	X	X
Wide Range Instrument			
Linear Power	1	X	
Log Power	1	X	
Reactor Period/Startup Rate	1	X	
Power Range Instrument			
Linear Power	1	X	
Pulse Peak Power	1		X

Basis

Fuel temperature displayed at the control console gives continuous information on this parameter which has a specified safety limit. The power level monitors ensure that the reactor power level is adequately monitored for the manual control, automatic control, square wave, and pulsing modes of operation. The specifications on reactor power level and reactor period indications are included in this section to provide assurance that the reactor is operated at all times within the limits allowed by these Technical Specifications.

3.2.4 Reactor Safety System and Reactor Interlocks

Applicability

This specification applies to the reactor safety system channels, the reactor interlocks, and the watchdog circuit.

Objective

The objective is to specify the minimum number of reactor safety system channels and reactor interlocks that must be operable for safe operation.

Specification

The reactor SHALL NOT be operated unless all of the channels and interlocks described in Table 2a and Table 2b are operable.

Basis

a. A temperature SCRAM and two power level SCRAMs ensure the reactor is shutdown before the safety limit on the fuel element temperature is reached. The actual setting of the fuel temperature SCRAM depends on the LSSS for that core loading and the location of the instrumented fuel element (see TS 2.2).

Table 2a
Minimum Reactor Safety System Channels

Channel	Number Operable	Function	Effective Mode MN, AU	Pulse	SW
Fuel Temperature	1	SCRAM ≤ 650°C*	X	X	X
High Power	2	SCRAM ≤ 110% of maximum reactor operational power not to exceed 1.1 MW	X		X
Detector Power Supply	1	SCRAM on failure of supply voltage	X		X
SCRAM Bar on Console	1	Manual SCRAM	X	X	X
Preset Timer	1	Transient Rod SCRAM 15 seconds or less after pulse		X	
Watchdog Circuit	1	SCRAM on software or self-check failure	X	X	X

* The limit of 650°C SHALL be reduced as required by TS 2.2.

Table 2b
Minimum Reactor Interlocks

Channel	Number Operable	Function	Effective Mode MN. AU	Pulse	SW
Source Level	1	Prevent rod withdrawal without a neutron-induced signal on the log power channel	X		
Pulse Mode Inhibit	1	Prevent pulsing from levels above 1 kW		X	
Transient Rod	1	Prevent applications of air unless cylinder is fully inserted	X		
Shim, Safety, and Regulating Rod	1	Prevent movement of any rod except the transient rod		X	
Simultaneous Rod Withdrawal	1	Prevent simultaneous manual withdrawal of two rods	X		X

b. The maximum reactor operational power may be administratively limited to less than 1 MW depending on TS 3.1.5.b. The high power SCRAMs SHALL be set to no more than 110% of the administratively limited maximum reactor operational power if it is less than 1 MW.

c. Operation of the reactor is prevented by SCRAM if there is a failure of the detector power supply for the reactor safety system channels.

d. The manual SCRAM allows the operator to shut down the reactor in any mode of operation if an unsafe or abnormal condition occurs.

e. The preset timer ensures that the transient rod will be inserted and the reactor will remain at low power after pulsing.

f. The watchdog circuit will SCRAM the reactor if the software or the self-checks fail (see Safety Analysis Report, Chapter 7).

g. The interlock to prevent startup of the reactor without a neutron-induced signal ensures that sufficient neutrons are available for proper startup in all allowable modes of operation.

h. The interlock to prevent the initiation of a pulse above 1 kW is to ensure that fuel temperature is approximately pool temperature when a pulse is performed. This is to ensure that the safety limit is not reached.

i. The interlock to prevent application of air to the transient rod unless the cylinder is fully inserted is to prevent pulsing the reactor in the manual control or automatic control mode.

j. In the pulse mode, movement of any rod except the transient rod is prevented by an interlock. This interlock action prevents the addition of reactivity other than with the transient rod.

k. Simultaneous manual withdrawal of two rods is prevented to ensure the reactivity rate of insertion is not exceeded.

3.2.5 Core Loading and Unloading Operation

Applicability

This specification applies to the source level interlock.

Objective

The objective of this specification is to allow bypass of the source level interlock during operations with a subcritical core.

Specification

During core loading and unloading operations when the reactor is subcritical, the source level interlock may be momentarily defeated using a spring loaded switch in accordance with the fuel loading procedure.

Basis

During core loading and unloading, the reactor is subcritical. Thus, momentarily defeating the source level interlock is a safe operation. Should the core become inadvertently supercritical, the accidental insertion of reactivity will not allow fuel temperature to exceed the 1150°C safety limit because no single TRIGA fuel element is worth more than 1% $\Delta k/k$ (~$1.43) in the most reactive core position.

3.2.6 SCRAM Time

Applicability

This specification applies to the time required to fully insert any control rod to a full down position from a full up position.

Objective

The objective is to achieve rapid shutdown of the reactor to prevent fuel damage.

Specification

The time from SCRAM initiation to the full insertion of any control rod from a full up position SHALL be less than 1 second.

Basis

This specification ensures that the reactor will be promptly shut down when a SCRAM signal is initiated. Experience and analysis, Safety Analysis Report, Chapter 13, have indicated that for the range of transients anticipated for a TRIGA reactor, the specified SCRAM time is adequate to ensure the safety of the reactor. If the SCRAM signal is initiated at 1.1 MW, while the control rod is being withdrawn, and the negative reactivity is not inserted until the end of the one second rod drop time, the maximum fuel temperature does not reach the safety limit.

3.3 Coolant System

3.3.1 Coolant Level Limits

Applicability

This specification applies to operation of the reactor with respect to a required depth of water above the top of the bottom grid plate.

Objective

The objective is to ensure that water is present to provide adequate personnel shielding and core cooling when the reactor is operated, and during a LOCA.

Specification

The reactor SHALL NOT be operated with less than 18 ft. of water above the top of the bottom grid plate.

Basis

When the water is more than approximately 18 ft. above the top of the bottom grid plate, the water provides sufficient shielding to protect personnel during operation at 1 MW, and core cooling is achieved with natural circulation of the water through the core. Should the water level drop below approximately 18.25 ft. above the top of the bottom grid plate while operating at 1 MW, a low pool level alarm (see TS 3.3.2) will alert the operator who is required by administratively approved procedure to shut down the reactor. Once this alarm occurs it will take longer than 1300 seconds before the core is completely uncovered because of a break in the 6" pipe connected to the bottom of the pool. Tests and calculations show that, during a LOCA, 680 seconds is sufficient decay time after shutdown (see Safety Analysis Report, Chapter 13) to prevent the fuel temperature from reaching 950°C. To prevent cladding rupture, the fuel and the cladding temperature must not exceed 950°C (it is assumed that the fuel and the cladding are the same temperature during air cooling).

3.3.2 Detection of Leak or Loss of Coolant

Applicability

This specification applies to detecting a pool water loss.

Objective

The objective is to detect the loss of a significant amount of pool water.

Specification

A pool level alarm SHALL be activated and corrective action taken when the pool level drops 26 cm from a level where the pool is full.

Basis

The alarm occurs when the water level is approximately 18.25 ft. above the top of the bottom grid plate. The point at which the pool is full is approximately 19.1 ft. above the top of the bottom grid plate. The reactor staff SHALL take action to keep the core covered with water according to existing procedures. The alarm is also transmitted to the Police Services annunciator panel which is monitored 24 hrs. a day. The alarm provides a signal that occurs at all times. Thus, the alarm provides time to initiate corrective action before the radiation from the core poses a serious hazard.

3.3.3 Fission Product Activity

Applicability

This specification applies to the detection of fission product activity.

Objective

The objective is to ensure that fission products from a leaking fuel element are detected to provide opportunity to take protective action.

Specification

An air particulate monitor SHALL be operating in the reactor bay whenever the reactor is operating. An alarm on this unit SHALL activate a building evacuation alarm.

Basis

This unit will be sensitive to airborne radioactive particulate matter containing fission products and fission gases and will alert personnel in time to take protective action.

3.3.4 Pool Water Supply for Leak Protection

Applicability

This specification applies to pool water supplies for the reactor pool for leak protection.

Objective

The objective is to ensure that a supply of water is available to replenish reactor pool water in the event of pool water leakage.

Specification

A source of water of at least 100 GPM SHALL be available either from the University water supply or by diverting the heat exchanger secondary flow to the pool.

Basis

Provisions for both of these supplies are in place and will supply more than the specified flow rate. This flow rate will be more than sufficient to handle leak rates that have occurred in the past or any anticipated leak that might occur in the future.

3.3.5 Coolant Conductivity Limits

Applicability

This specification applies to the conductivity of the water in the pool.

Objectives

The objectives are:

a. To prevent activated contaminants from becoming a radiological hazard, and

b. To help preclude corrosion of fuel cladding and other primary system components.

Specification

The reactor SHALL NOT be operated if the conductivity of the bulk pool water is greater than 5 microsiemens/cm (5 micromhos/cm).

Basis

Experience indicates that 5 microsiemens/cm is an acceptable level of water contaminants in an aluminum/stainless steel system such as that at the PSBR. Based on experience, activation at this level does not pose a significant radiological hazard, and significant corrosion of the stainless steel fuel cladding will not occur when the conductivity is below 5 microsiemens/cm.

3.3.6 Coolant Temperature Limits

Applicability

This specification applies to the pool water temperature.

Objective

The objective is to maintain the pool water temperature at a level that will not cause damage to the demineralizer resins.

Specification

An alarm SHALL annunciate and corrective action SHALL be taken if during operation the bulk pool water temperature reaches 140°F (60°C).

Basis

This specification is primarily to preserve demineralizer resins. Information available indicates that temperature damage will be minimal up to this temperature.

3.4 Confinement

Applicability

This specification applies to reactor bay doors.

Objective

The objective is to ensure that no large air passages exist to the reactor bay during reactor operation.

Specifications

The reactor bay truck door SHALL be closed and the reactor bay personnel doors SHALL NOT be blocked open and left unattended if either of the following conditions are true.

a. The reactor is not secured, or

b. Irradiated fuel or a fueled experiment with significant fission product inventory is being moved outside containers, systems or storage areas.

Basis

This specification helps to ensure that the air pressure in the reactor bay is lower than the remainder of the building and the outside air pressure. Controlled air pressure is maintained by the air exhaust system and ensures controlled release of any airborne radioactivity.

3.5 ~~Engineered Safety Features - Facility Exhaust System and Emergency Exhaust System~~Engineered Safety Features - Ventilation Systems

Applicability

This specification applies to the operation of the reactor bay heating ventilation and exhaust system and the emergency exhaust system. ~~facility exhaust system and the emergency exhaust system.~~

Objective

The objective is to mitigate the consequences of the release of airborne radioactive materials resulting from reactor operation.

Specification

a. ~~a. If the reactor is operating not secured, at least one facility exhaust fan SHALL be operating and~~The reactor SHALL NOT be operated unless reactor bay differential pressure is negative.

Upon discovery of no operating exhaust fans, restore a reactor bay exhaust fan to operation within one hour or shut down the reactor.

~~a.~~b. ~~,~~ Eexcept for periods of time less than 48 hours during maintenance or repair, the emergency exhaust system SHALL be operable.

c. ~~b.~~ If irradiated fuel or a fueled experiment with significant fission product inventory is being moved outside containers, systems or storage areas, at least one ~~facility~~ reactor bay exhaust fan SHALL be operating and the emergency exhaust system SHALL be operable.

Upon discovery of no operating reactor bay exhaust fans OR discovery of an inoperable emergency exhaust system, immediately place the fuel or fueled experiment in a safe storage location and cease further movements until compliance with 3.5.c is restored.

Basis

a. During normal operation, the concentration of airborne radioactivity in unrestricted areas is below effluent release limits as described in the Safety Analysis Report, Chapter 13. The operation of any of the reactor bay exhaust fans, either the reactor bay heating ventilation and exhaust system or emergency exhaust system, will maintain this condition and provide confinement as defined by TS 1.1.8. If all exhaust from the reactor bay is temporarily lost, the one hour time limit to restore exhaust gives the operators time to investigate and respond. Reactor bay area radiation and/or particulate radiation monitors will continue to assure than an unrecognized hazardous condition does not develop.

b. In the event of a substantial release of airborne radioactivity, an air radiation monitor and/or an area radiation monitor will sound a building evacuation alarm which will alert personnel and automatically cause the reactor bay heating ventilation and exhaust system to shut down. The ~~facility~~ emergency exhaust system will start and the ~~exhaust system to close and the~~ exhausted air ~~to~~will be

passed through the emergency exhaust system filters before release. This reduces the radiation within the building. The filters will ~~remove~~ remove ≈ 90% all of the particulate fission products that escape to the atmosphere.

The emergency exhaust system activates only during an evacuation whereupon all personnel are required to evacuate the building (TS 3.6.2). If there is an evacuation while the emergency exhaust system is out of service for maintenance or repair, personnel evacuation is not prevented.

In the unlikely event an accident occurs during emergency exhaust system maintenance or repair, the public dose will be equivalent to or less than that calculated in the Safety Analysis Report, Chapter 13.

c. During irradiated fuel or fueled experiment movement, the likelihood of an event releasing fission products is increased. Therefore the continuous operation of a reactor bay exhaust fan and the availability of an operable filtered exhaust is prudent. If the system fails or is discovered to be inoperable during movement activities, the fuel or fueled experiment must be immediately placed in a safe storage location. No additional movements may be conducted until the limiting condition for operation is satisfied.

Amendment 38
October 12, 2012

3.6 Radiation Monitoring System

3.6.1 Radiation Monitoring Information

Applicability

This specification applies to the radiation monitoring information which must be available to the reactor operator during reactor operation.

Objective

The objective is to ensure that sufficient radiation monitoring information is available to the operator to ensure personnel radiation safety during reactor operation.

Specification

The reactor SHALL NOT be operated unless the radiation monitoring channels listed in Table 3 are operating.

Table 3
Radiation Monitoring Channels

Radiation Monitoring Channels	Function	Number
Area Radiation Monitor	Monitor radiation levels in the reactor bay.	**1**
Continuous Air (Radiation) Monitor	Monitor radioactive particulates in the reactor bay air.	**1**
Neutron Beam~~Beamhole~~ Laboratory Monitor	Monitor radiation in the Beamhole Laboratory (required only when the laboratory is in use.)	**1**

Basis

a. The radiation monitors provide information to operating personnel of any impending or existing danger from radiation so that there will be sufficient time to evacuate the facility and to take the necessary steps to control the spread of radioactivity to the surroundings.

b. The area radiation monitor in the ~~Beamhole~~Neutron Beam Laboratory provides information to the user and to the reactor operator when this laboratory is in use.

~~information to the user and to the reactor operator when this laboratory is in use.~~

3.6.2 Evacuation Alarm

Applicability

This specification applies to the evacuation alarm.

Objective

The objective is to ensure that all personnel are alerted to evacuate the PSBR building when a potential radiation hazard exists within this building.

Specification

The reactor SHALL NOT be operated unless the evacuation alarm is operable and audible to personnel within the PSBR building when activated by the radiation monitoring channels in Table 3 or a manual switch.

Basis

The evacuation alarm produces a loud pulsating sound throughout the PSBR building when there is any impending or existing danger from radiation. The sound notifies all personnel within the PSBR building to evacuate the building as prescribed by the PSBR emergency procedure.

3.6.3 Argon-41 Discharge Limit

Applicability

This specification applies to the concentration of Argon-41 that may be discharged from the PSBR.

Objective

The objective is to ensure that the health and safety of the public is not endangered by the discharge of Argon-41 from the PSBR.

Specification

All Argon-41 concentrations produced by the operation of the reactor SHALL be below the limits imposed by 10 CFR Part 20 when averaged over a year.

Basis

The maximum allowable concentration of Argon-41 in air in unrestricted areas as specified in Appendix B, Table 2 of 10 CFR Part 20 is 1.0×10^{-8} μCi/ml. Measurements of Argon-41 have been made in the reactor bay when the reactor operates at 1 MW. These measurements show that the concentrations averaged over a year produce less than 1.0×10^{-8} μCi/ml in an unrestricted area (see Environmental Impact Appraisal, December 12, 1996).

3.6.4 As Low As Reasonably Achievable (ALARA)

Applicability

This specification applies to all reactor operations that could result in occupational exposures to radiation or the release of radioactive effluents to the environs.

Objective

The objective is to maintain all exposures to radiation and release of radioactive effluents to the environs ALARA.

Specification

An ALARA program SHALL be in effect.

Basis

Having an ALARA program will ensure that occupational exposures to radiation and the release of radioactive effluents to the environs will be ALARA. Having such a formal program will keep the staff cognizant of the importance to minimize radiation exposures and effluent releases.

3.7 Limitations of Experiments

Applicability

These specifications apply to experiments installed in the reactor and its experimental facilities.

Objective

The objective is to prevent damage to the reactor and to minimize release of radioactive materials in the event of an experiment failure.

Specifications

The reactor SHALL NOT be operated unless the following conditions governing experiments exist:

a. The reactivity of a movable experiment and/or movable portions of a secured experiment plus the maximum allowed pulse reactivity SHALL be less than 2.45% Δk/k (~$3.50). However, the reactivity of a movable experiment and/or movable portions of a secured experiment SHALL have a reactivity worth less than 1.4% Δk/k (~$2.00). During measurements made to determine specific worth, this specification is suspended provided the reactor is operated at power levels no greater than 1 kW. When a movable experiment is used, the maximum allowed pulse SHALL be reduced below the allowed pulse reactivity insertion of 2.45% Δk/k (~$3.50) to ensure that the sum is less 2.45% Δk/k (~$3.50).

b. A single secured experiment SHALL be limited to a maximum of 2.45% Δk/k (~$3.50). The sum of the reactivity worth of all experiments SHALL be less than 2.45% Δk/k (~$3.50). During measurements made to determine experimental worth, this specification is suspended provided the reactor is operated at power levels no greater that 1 kW.

c. When the keff of the core is less than 1 (one) with all control rods at their upper limit and no experiments in or near the core, secured negative reactivity experiments may be added without limit.

d. An experiment may be irradiated or an experimental facility may be used in conjunction with the reactor provided its use does not require a license amendment, as described in 10 CFR 50.59, "Changes, Tests and Experiments." The failure mechanisms that SHALL be analyzed include, but are not limited to corrosion, overheating, impact from projectiles, chemical, and mechanical explosions.

   Explosive material SHALL NOT be stored or used in the facility without proper safeguards to prevent release of fission products or loss of reactor shutdown capability.

   If an experimental failure occurs which could lead to the release of fission products or the loss of reactor shutdown capability, physical inspection SHALL be performed to determine the consequences and the need for corrective action. The results of the inspection and any corrective action taken SHALL be reviewed by the Director or a designated alternate and determined to be satisfactory before operation of the reactor is resumed.

e. Experiment materials, except fuel materials, which could off-gas, sublime, volatilize, or produce aerosols under (1) normal operating conditions of the experiment and reactor, (2) credible accident conditions in the reactor, or (3) possible accident conditions in the experiment, SHALL be limited in activity such that the airborne concentration of radioactivity averaged over a year SHALL NOT exceed the limit of Appendix B Table 2 of 10 CFR Part 20.

   When calculating activity limits, the following assumptions SHALL be used:

   1) If an experiment fails and releases radioactive gases or aerosols to the reactor bay or atmosphere, 100% of the gases or aerosols escape.

   2) If the effluent from an experimental facility exhausts through a holdup tank which closes automatically on high radiation level, at least 10% of the gaseous activity or aerosols produced will escape.

   3) If the effluent from an experimental facility exhausts through a filter installation designed for greater than 99% efficiency for 0.3 micron particles, at least 10% of these vapors can escape.

   4) For materials whose boiling point is above 130°F and where vapors formed by boiling this material can escape only through an undisturbed column of water above the core, at least 10% of these vapors can escape.

f. Each fueled experiment SHALL be controlled such that the total inventory of iodine isotopes 131 through 135 in the experiment is no greater than 1.5 curies. In addition, any fueled experiment which would generate an inventory of more than 5 millicuries (mCi) of I-131 through I-135 SHALL be reviewed to ensure that in the case of an accident, the total release of iodine will not exceed that postulated for the MHA (see Safety Analysis Report, Chapter 13).

Basis

a. This specification limits the sum of the reactivities of a maximum allowed pulse and a movable experiment to the specified maximum reactivity of the transient rod. This limits the effects of a pulse simultaneous with the failure of the movable experiment to the effects analyzed for a 2.45% Δk/k (~$3.50) pulse. In addition, the maximum power attainable with the ramp insertion of 1.4% Δk/k (~$2.00) is less than 500 kW starting from critical.

b. The maximum worth of all experiments is limited to 2.45% Δk/k (~$3.50) so that their inadvertent sudden removal from the cold critical reactor will not result in the reactor achieving a power level high enough to exceed the temperature safety limit (1150°C). The worth of a single secured experiment is limited to the allowed pulse reactivity insertion as an increased measure of safety. Should the 2.45% Δk/k, (~$3.50) reactivity be inserted by a ramp increase, the maximum power attainable is less than 1 MW.

c. Since the initial core is subcritical, adding and then inadvertently removing all negative reactivity experiments leaves the core in its initial subcritical condition.

d. The design basis accident is the MHA (See Safety Analysis Report, Chapter 13). A chemical explosion (such as detonated TNT) or a mechanical explosion (such as a steam explosion or a high pressure gas container explosion) may release enough energy to cause release of fission products or loss of reactor shutdown capability. A projectile with a large amount of kinetic energy could cause release of fission products or loss of reactor shutdown capability. Accelerated corrosion of the fuel cladding due to material released by a failed experiment could also lead to release of fission products.

   If an experiment failure occurs a special investigation is required to ensure that all effects from the failure are known before operation proceeds.

e. This specification is intended to reduce the likelihood that airborne activities in excess of the limits of Appendix B Table 2 of 10 CFR Part 20 will be released to the atmosphere outside the facility boundary.

f. The 5 mCi limitation on I-131 through I-135 ensures that in the event of failure of a fueled experiment, the exposure dose at the exclusion area boundary will be less than that postulated for the MHA (See Safety Analysis Report, Chapter 13) even if the iodine is released in the air.

4.0 SURVEILLANCE REQUIREMENTS

IF a Surveillance Requirement(s) is not accomplished in the specified interval that prohibits reactor operation; **THEN** the reactor SHALL NOT be operated until the Surveillance Requirement(s) is satisfied EXCEPT as required to accomplish the required Surveillance(s).

4.1 Reactor Parameters

4.1.1 Reactor Power Calibration

Applicability

This specification applies to the surveillance of the reactor power calibration.

Objective

The objective is to verify the performance and operability of the power measuring channel.

Specification

A thermal power channel calibration SHALL be made on the linear power level monitoring channel biennially, not to exceed 30 months.

Basis

The thermal power level channel calibration will ensure that the reactor is operated at the authorized power levels.

4.1.2 Reactor Excess Reactivity

Applicability

This specification applies to surveillance of core excess reactivity.

Objective

The objective is to ensure that the reactor excess reactivity does not exceed the Technical Specifications and the limit analyzed in Safety Analysis Report, Chapter 13.

Specification

The excess reactivity of the core SHALL be measured annually, not to exceed 15 months, and following core or control rod changes equal to or greater than 0.7% $\Delta k/k$ (~$1.00).

Basis

Excess reactivity measurements on this schedule ensure that no unexpected changes have occurred in the core and the core configuration does not exceed excess reactivity limits established in the TS 3.1.2.

4.1.3 TRIGA Fuel Elements

Applicability

This specification applies to the surveillance requirements for the TRIGA fuel elements.

Objective

The objective is to verify the continuing integrity of the fuel element cladding.

Specification

Fuel elements and control rods with fuel followers SHALL be inspected visually for damage or deterioration and measured for length and bend in accordance with the following:

a. Before being placed in the core for the first time or before return to service.

b. Every two years, not to exceed 30 months, or at intervals not to exceed the sum of $3,500 in pulse reactivity, whichever comes first, for elements with a NP greater than 1 (one) and for control rods with fueled followers.

c. Every four years, not to exceed 54 months, for elements with a NP of 1 (one) or less.

d. Upon being removed from service. Those removed from service are then exempt from further inspection.

Basis

The frequency of inspection and measurement schedule is based on the parameters most likely to affect the fuel cladding of a pulsing reactor operated at moderate pulsing levels and utilizing fuel elements whose characteristics are well known.

4.2 Reactor Control and Safety System

4.2.1 Reactivity Worth

Applicability

This specification applies to the reactivity worth of the control rods.

Objective

The objective is to ensure that the control rods are capable of maintaining the reactor subcritical.

Specification

The reactivity worth of each control rod and the shutdown margin for the core loading in use SHALL be determined annually, not to exceed 15 months, or following core or control rod changes equal to or greater than 0.7% $\Delta k/k$ (~$1.00).

Basis

The reactivity worth of the control rod is measured to ensure that the required shutdown margin is available and to provide an accurate means for determining the core excess reactivity, maximum reactivity, reactivity insertion rates, and the reactivity worth of experiments inserted in the core.

4.2.2 Reactivity Insertion Rate

Applicability

This specification applies to control rod movement speed.

Objective

The objective is to ensure that the reactivity addition rate specification is not violated and that the control rod drives are functioning.

Specification

The rod drive speed both up and down and the time from SCRAM initiation to the full insertion of any control rod from the full up position SHALL be measured annually, not to exceed 15 months, or when any significant work is done on the rod drive or the rod.

Basis

This specification ensures that the reactor will be promptly shut down when a SCRAM signal is initiated. Experience and analysis have indicated that for the range of transients anticipated for a TRIGA reactor, the specified SCRAM time is adequate to ensure the safety of the reactor. It also ensures that the maximum reactivity addition rate specification will not be exceeded.

4.2.3 Reactor Safety System

Applicability

The specifications apply to the surveillance requirements for measurements, channel tests, and channel checks of the reactor safety systems and watchdog circuit.

Objective

The objective is to verify the performance and operability of the systems and components that are directly related to reactor safety.

Specifications

a. A channel test of the SCRAM function of the wide range linear, power range linear, fuel temperature, manual, and preset timer safety channels SHALL be made on each day that the reactor is to be operated, or prior to each operation that extends more than one day.

b. A channel test of the detector power supply SCRAM functions for both the wide range and the power range and the watchdog circuit SHALL be performed annually, not to exceed 15 months.

c. Channel checks for operability SHALL be performed daily on fuel element temperature, wide range linear power, wide range log power, wide range reactor period/SUR, and power range linear power when the reactor is to be operated, or prior to each operation that extends more than one day.

d. The power range channel SHALL be compared with other independent channels for proper channel indication, when appropriate, each time the reactor is operated.

e. The pulse peak power channel SHALL be compared to the fuel temperature each time the reactor is pulsed, to ensure proper peak power channel operation.

Basis

System components have proven operational reliability.

a. Daily channel tests ensure accurate SCRAM functions and ensure the detection of possible channel drift or other possible deterioration of operating characteristics.

b. An annual channel test of the detector power supply SCRAM will ensure that this system works, based on past experience as recorded in the operation log book. An annual channel test of the watchdog circuit is sufficient to ensure operability.

c. The channel checks will make information available to the operator to ensure safe operation on a daily basis or prior to an extended run.

d. Comparison of the percent power channel with other independent power channels will ensure the detection of channel drift or other possible deterioration of its operational characteristics.

e. Comparison of the peak pulse power to the fuel temperature for each pulse will ensure the detection of possible channel drift or deterioration of its operational characteristics.

4.2.4 Reactor Interlocks

Applicability

These specifications apply to the surveillance requirements for the reactor control system interlocks.

Objective

The objective is to ensure performance and operability of the reactor control system interlocks.

Specifications

a. A channel check of the source interlock SHALL be performed each day that the reactor is operated or prior to each operation that extends more than one day except when the neutron signal is greater than the setpoint when the source is removed from the core.

b. A channel test SHALL be performed semi-annually, not to exceed 7 1/2 months, on the pulse mode inhibit interlock which prevents pulsing from power levels higher than one kilowatt.

c. A channel check SHALL be performed semi-annually, not to exceed 7 1/2 months, on the transient rod interlock which prevents application of air to the transient rod unless the cylinder is fully inserted.

d. A channel check SHALL be performed semi-annually, not to exceed 7 1/2 months, on the rod drive interlock which prevents movement of any rod except the transient rod in pulse mode.

e. A channel check SHALL be performed semi-annually, not to exceed 7 1/2 months, on the rod drive interlock which prevents simultaneous manual withdrawal of more than one rod.

Basis

The channel test and checks will verify operation of the reactor interlock system. Experience at the PSBR indicates that the prescribed frequency is adequate to ensure operability.

After extended operation, the photo neutron source strength may be high enough that removing the source may not drop the neutron signal below the setpoint of the source interlock. With a large intrinsic source there is no practical way to channel check the source interlock. In this case there is no need for a source interlock.

4.2.5 Overpower SCRAM

Applicability

This specification applies to the high power and fuel temperature SCRAM channels.

Objective

The objective is to verify that high power and fuel temperature SCRAM channels perform the SCRAM functions.

Specification

The high power and fuel temperature SCRAMs SHALL be tested annually, not to exceed 15 months.

Basis

Experience with the PSBR for more than a decade, as recorded in the operation log books, indicates that this interval is adequate to ensure operability.

4.2.6 Transient Rod Test

Applicability

These specifications apply to surveillance of the transient rod mechanism.

Objective

The objective is to ensure that the transient rod drive mechanism is maintained in an operable condition.

Specifications

a. The transient rod system SHALL be verified operable on each day that the reactor is pulsed.

b. The transient rod drive cylinder and the associated air supply system SHALL be inspected, cleaned, and lubricated as necessary, and at least annually, not to exceed 15 months.

c. The reactor SHALL be pulsed annually, not to exceed 15 months, to compare fuel temperature measurements and peak power levels with those of previous pulses of the same reactivity value or the reactor SHALL NOT be pulsed until such comparative pulse measurements are performed.

Basis

Functional checks along with periodic maintenance ensure repeatable performance. The reactor is pulsed at suitable intervals and a comparison made with previous similar pulses to determine if changes in transient rod drive mechanism, fuel, or core characteristics have taken place.

4.3 Coolant System

4.3.1 Fire Hose Inspection

Applicability

This specification applies to the dedicated fire hoses used to supply water to the pool in an emergency.

Objective

The objective is to ensure that these hoses are operable.

Specification

The two (2) dedicated fire hoses that provide supply water to the pool in an emergency SHALL be visually inspected for damage and wear annually, not to exceed 15 months.

Basis

This frequency is adequate to ensure that significant degradation has not occurred since the previous inspection.

4.3.2 Pool Water Temperature

Applicability

This specification applies to pool water temperature.

Objective

The objective is to limit pool water temperature.

Specification

The pool temperature alarm SHALL be calibrated annually, not to exceed 15 months.

Basis

Experience has shown this instrument to be drift-free and that this interval is adequate to ensure operability.

4.3.3 Pool Water Conductivity

Applicability

This specification applies to surveillance of pool water conductivity.

Objective

The objective is to ensure that pool water mineral content is maintained at an acceptable level.

Specification

Pool water conductivity SHALL be measured and recorded daily when the reactor is to be operated, or at monthly intervals when the reactor is shut down for this time period.

Basis

Based on experience, observation at these intervals provides acceptable surveillance of limits that ensure that fuel clad corrosion and neutron activation of dissolved materials will not occur.

4.3.4 Pool Water Level Alarm

Applicability

This specification applies to the surveillance requirements for the pool level alarm.

Objective

The objective is to verify the operability of the pool water level alarm.

Specification

The pool water level alarm SHALL be channel checked monthly, not to exceed 6 weeks, to ensure its operability.

Basis

Experience, as exhibited by past periodic checks, has shown that monthly checks of the pool water level alarm ensures operability of the system during the month.

4.4 Confinement

Applicability

This specification applies to reactor bay doors.

Objective

The objective is to ensure that reactor bay doors are kept closed as per TS 3.4.

Specification

Doors to the reactor bay SHALL be locked or under supervision by an authorized keyholder.

Basis

A keyholder is authorized by the Director or his designee.

4.5 ~~Facility Exhaust System and Emergency Exhaust System~~Ventilation Systems

Applicability

These specifications apply to the ~~facility exhaust~~reactor bay heating ventilation and exhaust system and emergency exhaust system.

Objective

The objective is to ensure the proper operation of the ~~facility~~reactor bay heating ventilation and exhaust system and emergency exhaust system in controlling releases of radioactive material to the uncontrolled environment.

Specifications

a. It SHALL be verified monthly, not to exceed 6 weeks, whenever operation is scheduled, that the emergency exhaust system is operable with correct pressure drops across the filters (as specified in procedures).

b. It SHALL be verified monthly, not to exceed 6 weeks, whenever operation is scheduled, that the reactor bay heating ventilation and~~facility~~ exhaust system is secured when the emergency exhaust system activates during an evacuation alarm (See TS 3.6.2 and TS 5.5).

c. Reactor bay differential pressure monitors SHALL be calibrated annually, not to exceed 15 months.

Basis

Experience, based on periodic checks performed over years of operation, has demonstrated that a test of the exhaust systems on a monthly basis, not to exceed 6 weeks, is sufficient to ensure the proper operation of the systems. This provides reasonable assurance on the control of the release of radioactive material. Annual calibration of the differential pressure sensors will ensure the accurate assessment of reactor bay negative pressure as required by TS 3.5.

4.6 Radiation Monitoring System and Effluents

4.6.1 Radiation Monitoring System and Evacuation Alarm

Applicability

This specification applies to surveillance requirements for the area radiation monitor, the ~~Beamhole~~Neutron Beam Laboratory radiation monitor, the air radiation monitor, and the evacuation alarm.

Objective

The objective is to ensure that the radiation monitors and evacuation alarm are operable and to verify the appropriate alarm settings.

Specification

The area radiation monitor, the ~~Beamhole~~Neutron Beam Laboratory radiation monitor, the
continuous air (radiation) monitor, and the evacuation alarm system SHALL be channel tested monthly not to exceed 6 weeks. They SHALL be verified to be operable by a channel check daily when the reactor is to be operated, and SHALL be calibrated annually, not to exceed 15 months.

Basis

Experience has shown this frequency of verification of the radiation monitor set points and operability and the evacuation alarm operability is adequate to correct for any variation in the system due to a change of operating characteristics. Annual channel calibration ensures that units are within the specifications defined by procedures.

4.6.2 Argon-41

Applicability

This specification applies to surveillance of the Argon-41 produced during reactor operation.

Objective

To ensure that the production of Argon-41 does not exceed the limits specified by 10 CFR Part 20.

Specification

The production of Argon-41 SHALL be measured and/or calculated for each new experiment or experimental facility that is estimated to produce a dose greater than 1 mrem at the exclusion boundary.

Basis

One (1) mrem dose per experiment or experimental facility represents 1% of the maximum 10 CFR Part 20 annual dose. It is considered prudent to analyze the Argon-41 production for any experiment or experimental facility that exceeds 1% of the annual limit.

4.6.3 ALARA

Applicability

This specification applies to the surveillance of all reactor operations that could result in occupational exposures to radiation or the release of radioactive effluents to the environs.

Objective

The objective is to provide surveillance of all operations that could lead to occupational exposures to radiation or the release of radioactive effluents to the environs.

Specification

As part of the review of all operations, consideration SHALL be given to alternative operational modes that might reduce staff exposures, release of radioactive materials to the environment, or both.

Basis

Experience has shown that experiments and operational requirements can, in many cases, be satisfied with a variety of combinations of facility options, core positions, power levels, time delays, and effluent or staff radiation exposures. Similarly, overall reactor scheduling achieves significant reductions in staff exposures. Consequently, ALARA must be a part of both overall reactor scheduling and the detailed experiment planning.

4.7 Experiments

Applicability

This specification applies to surveillance requirements for experiments.

Objective

The objective is to ensure that the conditions and restrictions of TS 3.7 are met.

Specification

Those conditions and restrictions listed in TS 3.7 SHALL be considered by the PSBR authorized reviewer before signing the irradiation authorization for each experiment.

Basis

Authorized reviewers are appointed by the facility director.

5.0 DESIGN FEATURES

5.1 Reactor Fuel

Specifications

The individual unirradiated TRIGA fuel elements shall have the following characteristics:

a. The total uranium content SHALL be either 8.5 wt% or 12.0 wt% nominal and enriched to less than 20% uranium-235.

b. The hydrogen-to-zirconium atom ratio (in the ZrHx) SHALL be a nominal 1.65 H atoms to 1.0 Zr atom.

c. The cladding SHALL be 304 stainless steel with a nominal 0.020 inch thickness.

Basis

Nominal values of uranium loading, U-235 enrichment, hydrogen loading and cladding thickness are taken to mean those values specified by the manufacturer as standard values for TRIGA fuel. Minor deviations about these levels may occur due to variations in manufacturing and are not considered to be violations of this specification.

5.2 Reactor Core

Specifications

a. The core SHALL be an arrangement of TRIGA uranium-zirconium hydride fuel-moderator elements positioned in the reactor grid plates.

b. The reflector, excluding experiments and experimental facilities, SHALL be water, or D_2O, or graphite, or any combination of the three moderator materials.

Basis

The arrangement of TRIGA fuel elements positioned in the reactor grid plates ensures that adequate space is maintained for effective cooling. The Mark III TRIGA reactor is an open design without provision for reflector except in the form of natural water used for cooling and graphite elements which may be placed in the grid array. Restrictions on the reflector in this specification ensure any changes are analyzed against the criteria for experiments consistent with TS 3.7.

5.3 Control Rods

Specifications

a. The shim, safety, and regulating control rods SHALL have SCRAM capability and contain borated graphite, B_4C powder, or boron and its compounds in solid form as a poison in stainless steel or aluminum cladding. These rods may incorporate fueled followers which have the same characteristics as the fuel region in which they are used.

b. The transient control rod SHALL have SCRAM capability and contain borated graphite, B_4C powder, or boron and its compounds in a solid form as a poison in an aluminum or stainless steel clad. When used as a transient rod, it SHALL have an adjustable upper limit to allow a variation of reactivity insertions. This rod may incorporate a voided or a solid aluminum follower.

Basis

The poison requirements for the control rods are satisfied by using neutron-absorbing borated graphite, B_4C powder, or boron and its compounds. These materials must be contained in a suitable cladding material, such as aluminum or stainless steel, to ensure mechanical stability during movement and to isolate the poison from the pool water environment. SCRAM capabilities are provided by the rapid insertion of the control rods, which is the primary operational safety feature of the reactor. The transient control rod is designed for use in a pulsing TRIGA reactor and does not by design have a fuel follower.

5.4 Fuel Storage

Specifications

a. All fuel elements SHALL be stored in a geometrical array where the keff is less than 0.8 for all conditions of moderation.

b. Irradiated fuel elements SHALL be stored in an array which SHALL permit sufficient natural convection cooling by water such that the fuel element temperature SHALL NOT reach the safety limit as defined in TS 2.1.

Basis

The limits imposed by this specification are conservative and ensure safe storage and handling of nuclear fuel. GA-5402 "Criticality Safety Guide" places a general limitation on well-moderated U-235 to 300 grams per square foot. A rack of new 12 wt% elements would have no more than 288 grams per square foot. Additional work by General Atomics in 1966 showed that a 2x10 array of 12 wt% elements with no separation would have a keff = 0.7967. Because the fuel racks used for storage have an actual spacing of 2.0 inches and 2.5 inches and vertically offset by 20 inches, the calculations are conservative.

5.5 Reactor Bay and Exhaust Systems

Specifications

a. The reactor SHALL be housed in a room (reactor bay) designed to restrict leakage. The minimum free volume (total bay volume minus occupied volume) in the reactor bay SHALL be 1900 m^3.

b. The reactor bay SHALL be equipped with two exhaust systems. Under normal operating conditions, the ~~facility~~reactor bay heating ventilation and exhaust system exhausts unfiltered reactor bay air to the environment releasing it at a point at least 24 feet above ground level. Upon initiation of a building evacuation alarm, the previously mentioned system is automatically secured (fans deenergized and exhaust dampers closed) and an emergency exhaust system automatically starts. The emergency exhaust system is also designed to discharge reactor bay air at a point at least 24 feet above ground level.

Basis

The value of 1900 m^3 for reactor bay free volume is assumed in the SAR 13.1.1 Maximum Hypothetical Accident and is used in the calculation of the radionuclide concentrations for the analysis.

The SAR analysis 13.1.1 Maximum Hypothetical Accident does not take credit for any filtration present in the emergency exhaust system. ~~The~~ Although analyzed as a ground release, the height above the ground of the release helps to ensure adequate mixing prior to possible public exposure.

5.6 Reactor Pool Water Systems

Specification

The reactor core SHALL be cooled by natural convective water flow.

Basis

Thermal and hydraulic calculations and operational experience indicate that a compact TRIGA reactor core can be safely operated up to power levels of at least 1.15 MW (thermal) with natural convective cooling.

6.0 ADMINISTRATIVE CONTROLS

6.1 Organization

6.1.1 Structure

The University Vice President for Research Dean of the Graduate School (level 1) has the responsibility for the reactor facility license. The management of the facility is the responsibility of the Director (level 2), who reports to the Vice President for Research, Dean of the Graduate School through the office of the Dean of the College of Engineering. Administrative and fiscal responsibility is within the office of the Dean.

The minimum qualifications for the position of Director of the PSBR are an advanced degree in science or engineering, and 2 years experience in reactor operation. Five years of experience directing reactor operations may be substituted for an advanced degree.

The Manager of Radiation Protection reports through the Director of Environmental Health and Safety, the assistant Vice President for Safety and Environmental Services, and to the Senior Vice President for Finance and Business/Treasurer. The qualifications for the Manager of Radiation Protection position are the equivalent of a graduate degree in radiation protection, 3 to 5 years experience with a broad byproduct material license, and certification by The American Board of Health Physics or eligibility for certification.

6.1.2 Responsibility

Responsibility for the safe operation of the reactor facility SHALL be within the chain of command shown in the organization chart. Individuals at the various management levels, in addition to having responsibility for the policies and operation of the reactor facility, SHALL be responsible for safeguarding the public and facility personnel from undue radiation exposures and for adhering to all requirements of the operating license and technical specifications.

In all instances, responsibilities of one level may be assumed by designated alternates or by higher levels, conditional upon appropriate qualifications.

ORGANIZATION CHART

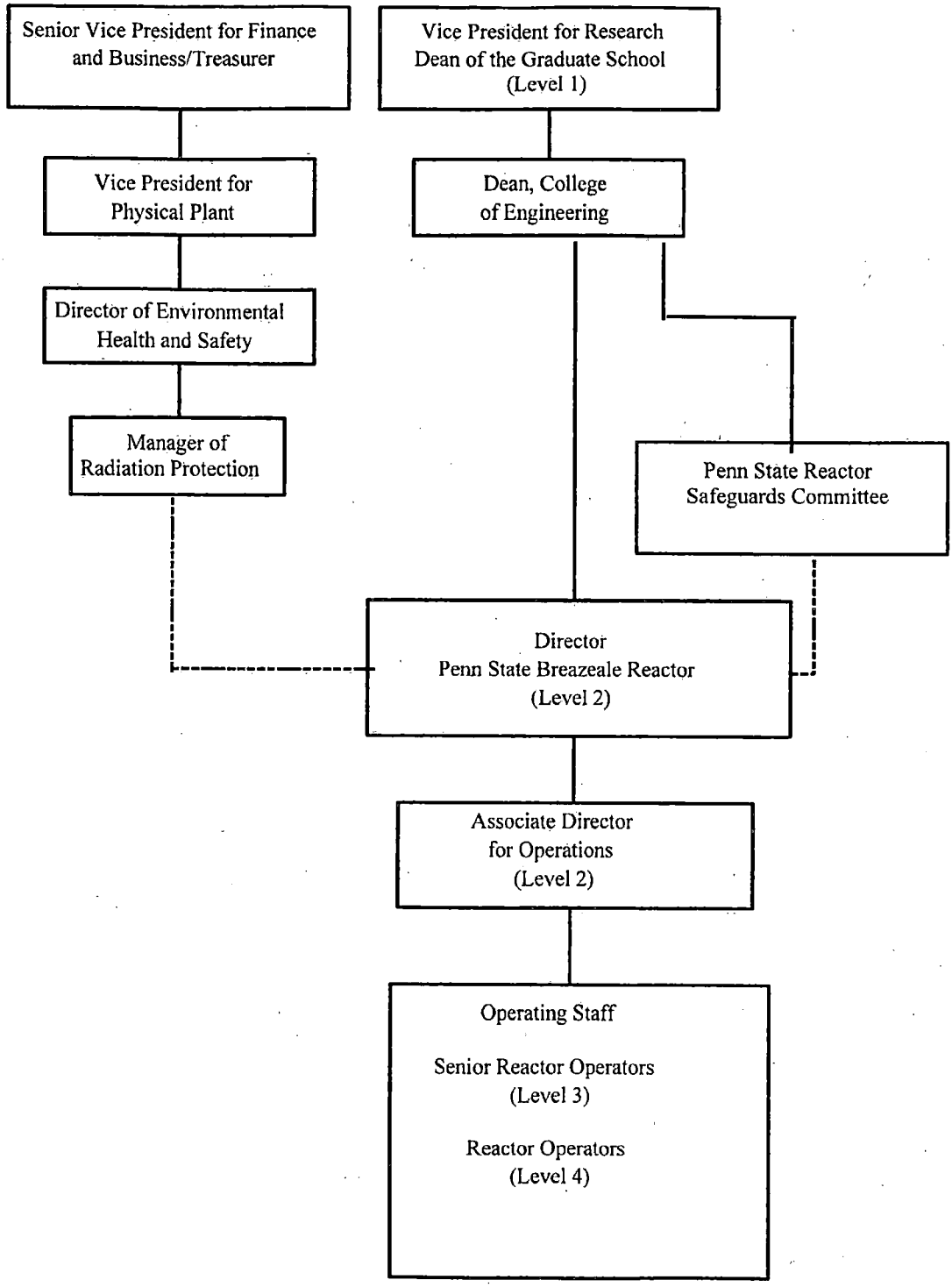

6.1.3 Staffing

a. The minimum staffing when the reactor is not secured SHALL be:

1) A licensed operator present in the control room, in accordance with applicable regulations.

2) A second person present at the facility able to carry out prescribed written instructions.

3) If a senior reactor operator is not present at the facility, one SHALL be available by telephone and able to be at the facility within 30 minutes.

b. A list of reactor facility personnel by name and telephone number SHALL be readily available in the control room for use by the operator. The list SHALL include:

1) Management personnel.

2) Radiation safety personnel.

3) Other operations personnel.

c. Events requiring the direction of a Senior Reactor Operator SHALL include:

1) All fuel or control-rod relocations within the reactor core region.

2) Relocation of any in-core experiment with a reactivity worth greater than one dollar.

3) Recovery from unplanned or unscheduled shutdown (in this instance, documented verbal concurrence from a Senior Reactor Operator is required).

6.1.4 Selection and Training of Personnel

The selection, training, and requalification of operations personnel SHALL meet or exceed the requirements of all applicable regulations and the American National Standard for Selection and Training of Personnel for Research Reactors, ANSI/ANS-15.4-1988, Sections 4-6.

6.2 Review and Audit

6.2.1 Safeguards Committee Composition

A Penn State Reactor Safeguards Committee (PSRSC) SHALL exist to provide an independent review and audit of the safety aspects of reactor facility operations. The committee SHALL have a minimum of 5 members and SHALL collectively represent a broad spectrum of expertise in reactor technology and other science and engineering fields. The committee SHALL have at least one member with health physics expertise. The committee SHALL be appointed by and report to the Dean of the College of Engineering. The PSBR Director SHALL be an ex-officio member of the PSRSC.

6.2.2 Charter and Rules

The operations of the PSRSC SHALL be in accordance with a written charter, including provisions for:

a. Meeting frequency - not less than once per calendar year not to exceed 15 months.

b. Quorums - at least one-half of the voting membership SHALL be present (the Director who is ex-officio SHALL NOT vote) and no more than one-half of the voting members present SHALL be members of the reactor staff.

c. Use of Subgroups - the committee chairman can appoint ad-Hoc committees as deemed necessary.

d. Minutes of the meetings - SHALL be recorded, disseminated, reviewed, and approved in a timely manner.

6.2.3 Review Function

The following items SHALL be reviewed:

a. 10 CFR Part 50.59 reviews of:

1) Proposed changes in equipment, systems, tests, or experiments.

2) All new procedures and major revisions thereto having a significant effect upon safety.

3) All new experiments or classes of experiments that could have a significant effect upon reactivity or upon the release of radioactivity.

b. Proposed changes in technical specifications, license, or charter.

c. Violations of technical specifications, license, or charter. Violations of internal procedures or instructions having safety significance.

d. Operating abnormalities having safety significance.

e. Special reports listed in TS 6.6.2.

f. Audit reports.

6.2.4 Audit

The audit function SHALL be performed annually, not to exceed 15 months, preferably by a non-member of the reactor staff. The audit function SHALL be performed by a person not directly involved with the function being audited. The audit function SHALL include selective (but comprehensive) examinations of operating records, logs, and other documents. Discussions with operating personnel and observation of operations should also be used as appropriate. Deficiencies uncovered that affect reactor safety SHALL promptly be reported to the office of the Dean of the College of Engineering. The following items SHALL be audited:

a. Facility operations for conformance to Technical Specifications, license, and procedures (at least once per calendar year with interval not to exceed 15 months).

b. The requalification program for the operating staff (at least once every other calendar year with the interval not to exceed 30 months).

c. The results of action taken to correct deficiencies that may occur in the reactor facility equipment, systems, structures, or methods of operations that affect reactor safety (at least once per calendar year with the interval not to exceed 15 months).

d. The reactor facility emergency plan and implementing procedures (at least once every other calendar year with the interval not to exceed 30 months).

6.3 Operating Procedures

Written procedures SHALL be reviewed and approved prior to the initiation of activities covered by them in accordance with TS 6.2.3. Written procedures SHALL be adequate to ensure the safe operation of the reactor, but SHALL NOT preclude the use of independent judgment and action should the situation require such. Operating procedures SHALL be in effect and SHALL be followed for at least the following items:

a. Startup, operation, and shutdown of the reactor.

b. Core loading, unloading, and fuel movement within the reactor.

c. Routine maintenance of major components of systems that could have an effect on reactor safety.

d. Surveillance tests and calibrations required by the technical specifications (including daily checkout procedure).

e. Radiation, evacuation, and alarm checks.

f. Release of irradiated samples.

g. Evacuation.

h. Fire or explosion.

i. Gaseous release.

j. Medical emergencies.

k. Civil disorder.

l. Bomb threat.

m. Threat of theft of special nuclear material.

n. Theft of special nuclear material.

o. Industrial sabotage.

p. Experiment evaluation and authorization.

q. Reactor operation using a beam port.

r. D_2O handling.

s. Health physics orientation requirements.

t. Hot cell entry procedure.

u. Implementation of emergency and security plans.

v. Radiation instrument calibration

w. Loss of pool water.

6.4 Review and Approval of Experiments

a. All new experiments SHALL be reviewed for Technical Specifications compliance, 10 CFR Part 50.59 analysis, and approved in writing by level 2 management or designated alternate prior to initiation.

b. Substantive changes to experiments previously reviewed by the PSRSC SHALL be made only after review and approval in writing by level 2 management or designated alternate.

6.5 Required Action

6.5.1 Action to be Taken in the Event the Safety Limit is Exceeded

In the event the safety limit (1150°C) is exceeded:

a. The reactor SHALL be shut down and reactor operation SHALL NOT be resumed until authorized by the U.S. Nuclear Regulatory Commission.

b. The safety limit violation SHALL be promptly reported to level 2 or designated alternates.

c. An immediate report of the occurrence SHALL be made to the Chairman, PSRSC and reports SHALL be made to the USNRC in accordance with TS 6.6.

d. A report SHALL be prepared which SHALL include an analysis of the causes and extent of possible resultant damage, efficacy of corrective action, and recommendations for measures to prevent or reduce the probability of recurrence. This report SHALL be submitted to the PSRSC for review.

6.5.2 Action to be Taken in the Event of a Reportable Occurrence

In the event of a reportable occurrence, (Definition 1.1.34) the following action SHALL be taken:

a. The reactor SHALL be returned to normal or shutdown. If it is necessary to shutdown the reactor to correct the occurrence, operations SHALL NOT be resumed unless authorized by level 2 or designated alternates.

b. The Director or a designated alternate SHALL be notified and corrective action taken with respect to the operations involved.

c. The Director or a designated alternate SHALL notify the office of the Dean of the College of Engineering and the office of the Vice President for Research, Dean of the Graduate School.

d. The Director or a designated alternate SHALL notify the Chairman of the PSRSC.

e. A report SHALL be made to the PSRSC which SHALL include an analysis of the cause of the occurrence, efficacy of corrective action, and recommendations for measures to prevent or reduce the probability of recurrence. This report SHALL be reviewed by the PSRSC at their next meeting.

f. A report SHALL be made to the Document Control Desk, USNRC Washington, DC 20555.

6.6 Reports

6.6.1 Operating Reports

An annual report SHALL be submitted within 6 months of the end of The Pennsylvania State University fiscal year to the Document Control Desk, USNRC, Washington, DC 20555, including at least the following items:

a. A narrative summary of reactor operating experience including the energy produced by the reactor, and the number of pulses ≥ $2.00 but less than or equal to $2.50 and the number greater than $2.50.

b. The unscheduled shutdowns and reasons for them including, where applicable, corrective action taken to preclude recurrence.

c. Tabulation of major preventive and corrective maintenance operations having safety significance.

d. Tabulation of major changes in the reactor facility and procedures, and tabulation of new tests and experiments, that are significantly different from those performed previously and are not described in the Safety Analysis Report, including a summary of the analyses leading to the conclusions that no license amendment, as described in 10 CFR 50.59, was required.

e. A summary of the nature and amount of radioactive effluents released or discharged to environs beyond the effective control of the owner-operator as determined at or before the point of such release or discharge. The summary SHALL include to the extent practicable an estimate of individual radionuclides present in the effluent. If the estimated average release after dilution or diffusion is less than 20 percent of the concentration allowed or recommended, only a statement to this effect need be presented.

f. A summarized result of environmental surveys performed outside the facility.

6.6.2 Special Reports

Special reports are used to report unplanned events as well as planned major facility and administrative changes. These special reports SHALL contain and SHALL be communicated as follows:

a. There SHALL be a report no later than the following working day by telephone to the Operations Center, USNRC, Washington, DC 20555, to be followed by a written report to the Document Control Desk, USNRC, Washington, DC 20555, that describes the circumstances of the event within 14 days of any of the following:

   1) Violation of safety limits (See TS 6.5.1)

   2) Release of radioactivity from the site above allowed limits (See TS 6.5.2)

   3) A reportable occurrence (Definition 1.1.34)

b. A written report SHALL be made within 30 days to the USNRC, and to the offices given in TS 6.6.1 for the following:

   1) Permanent changes in the facility organization involving level 1-2 personnel.

   2) Significant changes in the transient or accident analysis as described in the Safety Analysis Report.

6.7 Records

To fulfill the requirements of applicable regulations, records and logs SHALL be prepared, and retained for the following items:

6.7.1 Records to be Retained for at Least Five Years

a. Log of reactor operation and summary of energy produced or hours the reactor was critical.

b. Checks and calibrations procedure file.

c. Preventive and corrective electronic maintenance log.

d. Major changes in the reactor facility and procedures.

e. Experiment authorization file including conclusions that new tests or experiments did not require a license amendment, as described in 10 CFR 50.59.

f. Event evaluation forms (including unscheduled shutdowns) and reportable occurrence reports.

g. Preventive and corrective maintenance records of associated reactor equipment.

h. Facility radiation and contamination surveys.

i. Fuel inventories and transfers.

j. Surveillance activities as required by the Technical Specifications.

k. Records of PSRSC reviews and audits.

6.7.2 Records to be Retained for at Least One Training Cycle

a. Requalification records for licensed reactor operators and senior reactor operators.

6.7.3 Records to be Retained for the Life of the Reactor Facility

a. Radiation exposure for all facility personnel and visitors.

b. Environmental surveys performed outside the facility.

c. Radioactive effluents released to the environs.

d. Drawings of the reactor facility including changes.

e. Records of the results of each review of exceeding the safety limit, the automatic safety system not functioning as required by TS 2.2, or any limiting condition for operation not being met.

FACILITY OPERATING LICENSE R-2

APPENDIX A

TECHNICAL SPECIFICATIONS FOR THE PENNSYLVANIA STATE UNIVERSITY BREAZEALE REACTOR

DOCKET NO. 50-005

MARCH 2019

1.0 INTRODUCTION

Included in this document are the Technical Specifications (TS) and the Bases for the Technical Specifications. These Bases, which provide the technical support for the individual technical specifications, are included for information purposes only. They are not part of the Technical Specifications and they do not constitute limitations or requirements to which the licensee must adhere.

1.1 Definitions

1.1.1 ALARA

The ALARA (As Low As Reasonably Achievable) program is a program for maintaining occupational exposures to radiation and release of radioactive effluents to the environs as low as reasonably achievable.

1.1.2 Automatic Control

Automatic control mode operation is when normal reactor operations, including start up, power level change, power regulation, and protective power reductions are performed by the reactor control system without, or with minimal, operator intervention.

1.1.3 Channel

A channel is the combination of sensor, line, amplifier, and output devices which are connected for the purpose of measuring the value of a parameter.

1.1.4 Channel Calibration

A channel calibration is an adjustment of the channel such that its output responds, with acceptable range, and accuracy, to known values of the parameter which the channel measures. Calibration SHALL encompass the entire channel, including equipment actuation, alarm, or trip, and SHALL be deemed to include a Channel Test.

1.1.5 Channel Check

A channel check is a qualitative verification of acceptable performance by observation of channel behavior. This verification, where possible, SHALL include comparison of the channel with other independent channels or systems measuring the same variable.

1.1.6 Channel Test

A channel test is the introduction of a signal into the channel to verify that it is operable.

1.1.7 Cold Critical

Cold critical is the condition of the reactor when it is critical with the fuel and bulk water temperatures both below 100°F (37.8°C).

1.1.8 Confinement

Confinement means an enclosure on the overall facility which controls the movement of air into it and out through a controlled path.

1.1.9 Excess Reactivity

Excess reactivity is that amount of reactivity that would exist if all control rods (safety, regulating, etc.) were moved to the maximum reactive condition from the point where the reactor is exactly critical (keff=1 (one)) in the reference core condition.

1.1.10 Experiment

Experiment SHALL mean (a) any apparatus, device, or material which is not a normal part of the core or experimental facilities, but which is inserted in these facilities or is in line with a beam of radiation originating from the reactor core; or (b) any operation designed to measure reactor parameters or characteristics.

1.1.11 Experimental Facility

Experimental facility SHALL mean beam port, including extension tube with shields, thermal column with shields, vertical tube, central thimble, in-core irradiation holder, pneumatic transfer system, and in-pool irradiation facility.

1.1.12 Instrumented Element

An instrumented element is a TRIGA fuel element in which sheathed chromel-alumel or equivalent thermocouples are embedded in the fuel.

1.1.13 Limiting Conditions for Operation

Limiting conditions for operation of the reactor are those constraints included in the Technical Specifications that are required for safe operation of the facility. These limiting conditions are applicable only when the reactor is operating unless otherwise specified.

1.1.14 Limiting Safety System Setting

A limiting safety system setting (LSSS) is a setting for an automatic protective device related to a variable having a significant safety function.

1.1.15 Manual Control

Manual control mode is operation of the reactor with the power level controlled by the operator adjusting the control rod positions.

1.1.16 Maximum Elemental Power Density

The maximum elemental power density (MEPD) is the power density of the element in the core producing more power than any other element in that loading. The power density of an element is the total power of the core divided by the number of fuel elements in the core multiplied by the normalized power of that element. This definition is only applicable for non-pulse operation.

1.1.17 Maximum Power Level

Maximum Power Level is the maximum measured value of reactor power for non-pulse operation.

1.1.18 Measured Value

The measured value is the value of a parameter as it appears on the output of a channel.

1.1.19 Movable Experiment

A movable experiment is one where it is intended that the entire experiment may be moved in or near the core or into and out of the reactor while the reactor is operating.

1.1.20 Normalized Power

The normalized power, NP, is the ratio of the power of a fuel element to the average power per fuel element.

1.1.21 Operable

Operable means a component or system is capable of performing its intended function.

1.1.22 Operating

Operating means a component or system is performing its intended function.

1.1.23 Pulse Mode

Pulse mode operation SHALL mean operation of the reactor allowing the operator to insert preselected reactivity by the ejection of the transient rod.

1.1.24 Reactivity Limits

The reactivity limits are those limits imposed on reactor core reactivity. Quantities are referenced to a reference core condition.

1.1.25 Reactivity Worth of an Experiment

The reactivity worth of an experiment is the maximum absolute value of the reactivity change that would occur as a result of intended or anticipated changes or credible malfunctions that alter experiment position or configuration.

1.1.26 Reactor Control System

The reactor control system is composed of control and operational interlocks, reactivity adjustment controls, flow and temperature controls, and display systems which permit the operator to operate the reactor reliably in its allowed modes.

1.1.27 Reactor Interlock

A reactor interlock is a device which prevents some action, associated with reactor operation, until certain reactor operation conditions are satisfied.

1.1.28 Reactor Operating

The reactor is operating whenever it is not secured or shutdown.

1.1.29 Reactor Secured

The reactor is secured when:

a. It contains insufficient fissile material or moderator present in the reactor, adjacent experiments, or control rods, to attain criticality under optimum available conditions of moderation, and reflection, or

b. A combination of the following:

1) The minimum number of neutron absorbing control rods are fully inserted or other safety devices are in shutdown positions, as required by technical specifications, and

2) The console key switch is in the off position and the key is removed from the lock, and

3) No work is in progress involving core fuel, core structure, installed control rods, or control rod drives unless they are physically decoupled from the control rods, and

4) No experiments in or near the reactor are being moved or serviced that have, on movement, a reactivity worth exceeding the maximum value allowed for a single experiment or one dollar whichever is smaller.

1.1.30 Reactor Shutdown

The reactor is shutdown if it is subcritical by at least one dollar in the reference core condition and the reactivity worth of all experiments is included.

1.1.31 Reactor Safety System

Reactor safety systems are those systems, including their associated input channels, which are designed to initiate automatic reactor protection or to provide information for initiation of manual protective action.

1.1.32 Reference Core Condition

The condition of the core when it is at ambient temperature (cold) and the reactivity worth of xenon is negligible (<0.21% $\Delta k/k$ (~$0.30)).

1.1.33 Research Reactor

A research reactor is defined as a device designed to support a self-sustaining neutron chain reaction for research, development, educational, training, or experimental purposes, and which may have provisions for the production of radioisotopes.

1.1.34 Reportable Occurrence

A reportable occurrence is any of the following which occurs during reactor operation:

a. Operation with the safety system setting less conservative than specified in TS 2.2, Limiting Safety System Setting.

b. Operation in violation of a limiting condition for operation.

c. Failure of a required reactor safety system component which could render the system incapable of performing its intended safety function.

d. Any unanticipated or uncontrolled change in reactivity greater than one dollar.

e. An observed inadequacy in the implementation of either administrative or procedural controls which could result in operation of the reactor outside the limiting conditions for operation.

f. Release of fission products from a fuel element.

g. Abnormal and significant degradation in reactor fuel, cladding, coolant boundary or confinement boundary that could result in exceeding 10 CFR Part 20 exposure criteria.

1.1.35 Rod-Transient

The transient rod is a control rod with SCRAM capabilities that is capable of providing rapid reactivity insertion for use in either pulse or square wave mode of operation.

1.1.36 Safety Limit

Safety limits are limits on important process variables which are found to be necessary to reasonably protect the integrity of certain physical barriers which guard against the uncontrolled release of radioactivity. The principal physical barrier is the fuel element cladding.

1.1.37 SCRAM Time

SCRAM time is the elapsed time between reaching a limiting safety system set point and a specified control rod movement.

1.1.38 Secured Experiment

A secured experiment is any experiment, experimental facility, or component of an experiment that is held in a stationary position relative to the reactor by mechanical means. The restraining forces must be substantially greater than those to which the experiment might be subjected to by hydraulic, pneumatic, buoyant, or other forces which are normal to the operating environment of the experiment, or by forces which can arise as a result of credible malfunctions.

1.1.39 Secured Experiment with Movable Parts

A secured experiment with movable parts is one that contains parts that are intended to be moved while the reactor is operating.

1.1.40 Shall, Should, and May

The word "shall" is used to denote a requirement; the word "should" to denote a recommendation; and the word "may" to denote permission, neither a requirement nor a recommendation.

1.1.41 Shim, Regulating, and Safety Rods

A shim, regulating, or safety rod is a control rod having an electric motor drive and SCRAM capabilities. It has a fueled follower section.

1.1.42 Shutdown Margin

Shutdown margin SHALL mean the minimum shutdown reactivity necessary to provide confidence that the reactor can be made subcritical by means of the control and safety systems starting from any permissible operating condition although the most reactive rod is in its most reactive position, and that the reactor will remain subcritical without further operator action.

1.1.43 Square Wave Mode

Square wave (SW) mode operation SHALL mean operation of the reactor allowing the operator to insert preselected reactivity by the ejection of the transient rod, and which results in a maximum power within the license limit.

1.1.44 Steady State Power Level

Steady state power level is the nominal measured value of reactor power to which reactor power is being controlled whether by manual or automatic actions. Minor variations about this level may occur due to noise, normal signal variation, and reactivity adjustments. During manual, automatic, or square wave modes of operation, some initial, momentary overshoot may occur.

1.1.45 TRIGA Fuel Element

A TRIGA fuel element is a single TRIGA fuel rod of standard type, either 8.5 wt% U-ZrH in stainless steel cladding or 12 wt% U-ZrH in stainless steel cladding enriched to less than 20% uranium-235.

1.1.46 Watchdog Circuit

A watchdog circuit is a circuit consisting of a timer and a relay. The timer energizes the relay as long as it is reset prior to the expiration of the timing interval. If it is not reset within the timing interval, the relay will de-energize thereby causing a SCRAM.

2.0 SAFETY LIMIT AND LIMITING SAFETY SYSTEM SETTING

2.1 Safety Limit - Fuel Element Temperature

Applicability

The safety limit specification applies to the maximum temperature in the reactor fuel.

Objective

The objective is to define the maximum fuel element temperature that can be permitted with confidence that no damage to the fuel element and/or cladding will result.

Specification

The temperature in a water-cooled TRIGA fuel element SHALL NOT exceed 1150°C under any operating condition.

Basis

The important parameter for a TRIGA reactor is the fuel element temperature. This parameter is well suited as a single specification especially since it can be measured at a point within the fuel element and the relationship between the measured and actual temperature is well characterized analytically. A loss in the integrity of the fuel element cladding could arise from a build-up of excessive pressure between the fuel-moderator and the cladding if the maximum fuel temperature exceeds 1150°C. The pressure is caused by the presence of air, fission product gases, and hydrogen from the dissociation of the hydrogen and zirconium in the fuel-moderator. The magnitude of this pressure is determined by the fuel-moderator temperature, the ratio of hydrogen to zirconium in the alloy, and the rate change in the pressure.

The safety limit for the standard TRIGA fuel is based on data, including the large mass of experimental evidence obtained during high performance reactor tests on this fuel. These data indicate that the stress in the cladding due to the increase in the hydrogen pressure from the dissociation of zirconium hydride will remain below
the ultimate stress provided that the temperature of the fuel does not exceed 1150°C and the fuel cladding is below 500°C. See Safety Analysis Report, Ref. 13 and 30 in Section 13 and Simnad, M.T., F.C. Foushee, and G.B. West, "Fuel Elements for Pulsed Reactors," Nucl. Technology, Vol. 28, p. 31-56 (January 1976).

2.2 Limiting Safety System Setting (LSSS)

Applicability

The LSSS specification applies to the SCRAM setting which prevents the safety limit from being reached.

Objective

The objective is to prevent the safety limit (1150°C) from being reached.

Specification

The limiting safety system setting SHALL be a maximum of 650°C as measured with an instrumented fuel element if it is located in a core position representative of the maximum elemental power density (MEPD) in that loading. If it is not practical to locate the instrumented fuel in such a position, the LSSS SHALL be reduced. The reduction of the LSSS SHALL be by a ratio based on the calculated linear relationship between the normalized power at the monitored position as compared to normalized power at the core position representative of the MEPD in that loading.

Basis

The limiting safety system setting is a temperature which, if reached, SHALL cause a reactor SCRAM to be initiated preventing the safety limit from being exceeded. Experiments and analyses described in the Safety Analysis Report, Section 13 - Accident Analysis, show that the measured fuel temperature at steady state power has a simple linear relationship to the normalized power of a fuel element in the core. Maximum fuel temperature occurs when an instrumented element is in a core position of MEPD. The actual location of the instrumented element and the associated LSSS SHALL be chosen by calculation and/or experiment prior to going to maximum reactor operational power level. The measured fuel temperature during steady state operation is close to the maximum fuel temperature in that element. Thus, 500°C of safety margin exists before the 1150°C safety limit is reached. This safety margin provides adequate compensation for variations in the temperature profile of depleted and differently loaded fuel elements (i.e. 8.5 wt% vs. 12 wt% fuel elements). See Safety Analysis Report, Chapter 13.

If it is not practical to place an instrumented element in the position representative of MEPD the LSSS SHALL be reduced to maintain the 500°C safety margin between the 1150°C safety limit and the highest fuel temperature in the core if it was being measured. The reduction ratio SHALL be determined by calculation using the accepted techniques used in Safety Analysis Report, Chapter 13.

In the pulse mode of operation, the same LSSS SHALL apply. However, the temperature channel will have no effect on limiting the peak power or fuel temperature, generated, because of its relatively long time constant (seconds), compared with the width of the pulse (milliseconds).

3.0 LIMITING CONDITIONS FOR OPERATION

The limiting conditions for operation as set forth in this section are applicable only when the reactor is operating. They need not be met when the reactor is shutdown unless specified otherwise.

3.1 Reactor Core Parameters

3.1.1 Non-Pulse Mode Operation

Applicability

These specifications apply to the power generated during manual control mode, automatic control mode, and square wave mode operations.

Objective

The objective is to limit the source term and energy production to that used in the Safety Analysis Report.

Specifications

a. The reactor may be operated at steady state power levels of 1 MW (thermal) or less.

b. The maximum power level SHALL be no greater than 1.1 MW (thermal).

c. The steady state fuel temperature SHALL be a maximum of 650°C as measured with an instrumented fuel element if it is located in a core position representative of MEPD in that loading. If it is not practical to locate the instrumented fuel in such a position, the steady state fuel temperature SHALL be calculated by a ratio based on the calculated linear relationship between the normalized power at the monitored position as compared to normalized power at the core position representative of the MEPD in that loading. In this case, the measured steady state fuel temperature SHALL be limited such that the calculated steady state fuel temperature at the core position representative of the MEPD in that loading SHALL NOT exceed 650°C.

Basis

a. Thermal and hydraulic calculations and operational experience indicate that a compact TRIGA reactor core can be safely operated up to power levels of at least 1.15 MW (thermal) with natural convective cooling.

b. Operation at 1.1 MW (thermal) is within the bounds established by the SAR for steady state operations. See Chapter 13, Section B of the SAR.

c. Limiting the maximum steady state measured fuel temperature of any position to 650°C places an upper bound on the fission product release fraction to that used in the analysis of a Maximum Hypothetical Accident (MHA). See Safety Analysis Report, Chapter 13.

3.1.2 Reactivity Limitation

Applicability

This specification applies to the reactivity condition of the reactor and the reactivity worth of control rods, experiments, and experimental facilities. It applies to all modes of operation.

Objective

The objective is to ensure that the reactor is operated within the limits analyzed in the Safety Analysis Report and to ensure that the safety limit will not be exceeded.

Specification

a. The maximum excess reactivity above cold, clean, critical plus samarium poison of the core configuration with experiments and experimental facilities in place SHALL be 4.9% $\Delta k/k$ (~$7.00).

b. During initial measurements of maximum excess reactivity for a new core/experimental configuration this specification is suspended provided the reactor is operated at power levels no greater than 1 kW. If the power level exceeds 1 kW, power SHALL be reduced to less than 1 kW within one minute. This exemption does not apply for the annual confirmatory measurement of excess reactivity required by TS 4.1.2.

Basis

Limiting the excess reactivity of the core to 4.9% $\Delta k/k$ (~$7.00) prevents the fuel temperature in the core from exceeding 1150°C under any assumed accident condition as described in the Safety Analysis Report, Chapter 13. The exemption allows the initial physics measurement of maximum excess reactivity for a new core/experimental configuration to be measured without creating a reportable occurrence. Maintaining the power level less that 1 kW during this exemption assures there is no challenge to the safety limit on fuel temperature.

3.1.3 Shutdown Margin

Applicability

This specification applies to the reactivity condition of the reactor and the reactivity worth of control rods, experiments, and experimental facilities. It applies to all modes of operation.

Objective

The objective is to ensure that the reactor can be shut down at all times and to ensure that the safety limit will not be exceeded.

Specification

The reactor SHALL NOT be operated unless the shutdown margin provided by control rods is greater than 0.175% $\Delta k/k$ (~$0.25) with:

a. All movable experiments, experiments with movable parts and experimental facilities in their most reactive state, and

b. The highest reactivity worth control rod fully withdrawn.

Basis

A shutdown margin of 0.175% $\Delta k/k$ (~$0.25) ensures that the reactor can be made subcritical from any operating condition even if the highest worth control rod should remain in the fully withdrawn position. The shutdown margin requirement may be more restrictive than TS 3.1.2.

3.1.4 Pulse Mode Operation

Applicability

These specifications apply to the energy generated in the reactor as a result of a pulse insertion of reactivity.

Objective

The objective is to ensure that the safety limit will not be exceeded during pulse mode operation.

Specifications

a. The stepped reactivity insertion for pulse operation SHALL NOT exceed 2.45% Δk/k (~$3.50) and the maximum worth of the poison section of the transient rod SHALL be limited to 2.45% Δk/k (~$3.50).

b. Pulses SHALL NOT be initiated from power levels above 1 kW.

Basis

a. Experiments and analyses described in the Safety Analysis Report, Chapter 13, show that the peak pulse temperatures can be predicted for new 12 wt% fuel placed in any core position. These experiments and analyses show that the maximum allowed pulse reactivity of 2.45% Δk/k (~$3.50), prevents the maximum fuel temperature from reaching the safety limit (1150°C) for any core configuration that meets the requirements of TS 3.1.5.

   The maximum worth of the pulse rod is limited to 2.45% Δk/k (~$3.50) to prevent exceeding the safety limit (1150°C) with an accidental ejection of the transient rod.

b. If a pulse is initiated from power levels below 1 kW, the maximum allowed full worth of the pulse rod can be used without exceeding the safety limit.

3.1.5 Core Configuration Limitation

Applicability

These specifications apply to all core configurations except as noted.

Objective

The objective is to ensure that the safety limit (1150°C) will not be exceeded due to power peaking effects in the various core configurations.

Specifications

a. The critical core SHALL be an assembly of either 8.5 wt% U-ZrH stainless steel clad or a mixture of 8.5 wt% and 12 wt% U-ZrH stainless steel clad TRIGA fuel-moderator elements placed in water with a 1.7-inch center line grid spacing.

b. The maximum calculated MEPD SHALL be less that 24.7 kW per fuel element for non-pulse operation.

c. The NP of any core loading with a maximum allowed pulse worth of 2.45% Δk/k (~$3.50) SHALL be limited to 2.2. IF the maximum allowed pulse worth is less than 2.45% Δk/k ($~3.50) for any given core loading (i.e. the pulse can be limited by the total worth of the transient rod, by the core excess, or administratively), THEN the maximum NP may be increased above 2.2 as long as the calculated maximum fuel temperature does not exceed the safety limit with that maximum allowed pulse worth and NP.

d. IF the maximum NP is increased above 2.2 as described in TS 3.1.5.c above, THEN the Insertion of Excess Reactivity analysis in the Safety Analysis Report SHALL be evaluated to ensure that the safety limit is not exceeded with the new conditions (See Safety Analysis Report, Chapter 13.1.2.).

e. The core SHALL NOT be configured such that a 12 wt% U-ZrH stainless steel clad TRIGA fuel-moderator element with a burnup less than a nominal 8000 MWD/Metric Ton of Uranium is located adjacent to a vacant (water-filled) internal core position during pulse mode operation.

Basis

a. The safety analysis is based on an assembly of either 8.5 wt% U-ZrH stainless steel clad or a mixture of 8.5 wt% and 12 wt% U-ZrH stainless steel clad TRIGA fuel-moderator elements placed in water with a 1.7-inch center line grid spacing.

b. Limiting the MEPD to 24.7 kW per element for non-pulse operation places an upper bound on the elemental heat production and the source term of the PSBR to that used in the analysis of a Loss Of Coolant Accident (LOCA) and Maximum Hypothetical Accident (MHA) respectively. See Safety Analysis Report, Chapter 13.

c. The maximum NP for a given core loading determines the peak pulse temperature with the maximum allowed pulse worth. If the maximum allowed pulse worth is reduced the maximum NP may be increased without exceeding the safety limit (1150°C). The amount of increase in the maximum NP allowed SHALL be calculated by an accepted method documented by an administratively approved procedure.

d. If the core loading deviates from the limits set in TS 3.1.5.c then revalidation of the Insertion of Excess Reactivity analysis in the Safety Analysis Report will ensure that the new loading does not inadvertently exceed the safety limit (See Safety Analysis Report, Chapter 13.1.2.).

e. Radial peaking effects in unirradiated 12 wt% U-ZrH stainless steel clad TRIGA fuel-moderator elements located adjacent to water-filled internal core position may cause a reduction in the safety margin during pulse mode operation with the maximum allowed pulse worth of 2.45% Δk/k (~$3.50) and the maximum allowed NP of 2.2. Locating an 8.5 wt% or moderately-irradiated (~8000 Megawatt Days per Metric Ton of Uranium) 12 wt% U-ZrH stainless steel clad TRIGA fuel-moderator element adjacent to vacant water-filled internal core positions provides additional safety margin. 12 wt% elements in the periphery of the core are not subject to this concern as the NP is too low to make these elements limiting.

3.1.6 TRIGA Fuel Elements

Applicability

These specifications apply to the mechanical condition of the fuel.

Objective

The objective is to ensure that the reactor is not operated with damaged fuel that might allow release of fission products.

Specifications

The reactor SHALL NOT be operated with damaged fuel except to detect and identify the fuel element for removal. A TRIGA fuel element SHALL be considered damaged and SHALL be removed from the core if:

a. In measuring the transverse bend, the bend exceeds the limit of 0.125 inch over the length of the cladding.

b. In measuring the elongation, its length exceeds its original length by 0.125 inch.

c. A clad defect exists as indicated by release of fission products.

Basis

a. The limit of transverse bend has been shown to result in no difficulty in disassembling the core. Analysis of the removal of heat from touching fuel elements shows that there will be no hot spots which cause damage to the fuel.

b. Experience with TRIGA reactors has shown that fuel element bending that could result in touching has occurred without deleterious effects. This is because (1) during steady state operation, the maximum fuel temperatures are at least 500°C below the safety limit (1150°C), and (2) during a pulse, the cladding temperatures remain well below their stress limit. The elongation limit has been specified to ensure that the cladding material will not be subjected to strains that could cause a loss of fuel integrity and to ensure adequate coolant flow.

3.2 Reactor Control and Reactor Safety System

3.2.1 Reactor Control Rods

Applicability

This specification applies to the reactor control rods.

Objective

The objective is to ensure that sufficient control rods are operable to maintain the reactor subcritical.

Specification

There SHALL be a minimum of three operable control rods in the reactor core.

Basis

The shutdown margin and excess reactivity specifications require that the reactor can be made subcritical with the most reactive control rod fully withdrawn. This specification helps ensure it.

3.2.2 Manual Control and Automatic Control

Applicability

This specification applies to the maximum reactivity insertion rate associated with movement of a standard control rod out of the core.

Objective

The objective is to ensure that adequate control of the reactor can be maintained during manual and 1, 2, or 3 rod automatic control.

Specification

The rate of reactivity insertion associated with movement of either the regulating, shim, or safety control rod SHALL be NOT greater than 0.63% Δk/k (~$0.90) per second when averaged over full rod travel. If the automatic control uses a combination of more than one rod, the sum of the reactivity of those rods SHALL be not greater than 0.63% Δk/k (~$0.90) per second when averaged over full travel.

Basis

The ram
accident analysis (refer to Safety Analysis Report, Chapter 13) indicates that the safety limit (1150°C) will not be exceeded if the reactivity addition rate is less than 1.75% Δk/k (~$2.50) per second, when averaged over full travel. This specification of 0.63% Δk/k (~$0.90) per second, when averaged over full travel, is well within that analysis.

3.2.3 Reactor Control System

Applicability

This specification applies to the information which must be available to the reactor operator during reactor operation.

Objective

The objective is to require that sufficient information is available to the operator to ensure safe operation of the reactor.

Specification

The reactor SHALL NOT be operated unless the measuring channels listed in Table 1 are operable. (Note that MN, AU, and SW are abbreviations for manual control mode, automatic control mode, and square wave mode, respectively).

Table 1
Measuring Channels

Measuring Channel	Min. No. Operable	Effective Mode MN, AU & SW	Effective Mode Pulse
Fuel Element Temperature	1	X	X
Wide Range Instrument			
Linear Power	1	X	
Log Power	1	X	
Reactor Period/Startup Rate	1	X	
Power Range Instrument			
Linear Power	1	X	
Pulse Peak Power	1		X

Basis

Fuel temperature displayed at the control console gives continuous information on this parameter which has a specified safety limit. The power level monitors ensure that the reactor power level is adequately monitored for the manual control, automatic control, square wave, and pulsing modes of operation. The specifications on reactor power level and reactor period indications are included in this section to provide assurance that the reactor is operated at all times within the limits allowed by these Technical Specifications.

3.2.4 Reactor Safety System and Reactor Interlocks

Applicability

This specification applies to the reactor safety system channels, the reactor interlocks, and the watchdog circuit.

Objective

The objective is to specify the minimum number of reactor safety system channels and reactor interlocks that must be operable for safe operation.

Specification

The reactor SHALL NOT be operated unless all of the channels and interlocks described in Table 2a and Table 2b are operable.

Basis

a. A temperature SCRAM and two power level SCRAMs ensure the reactor is shutdown before the safety limit on the fuel element temperature is reached. The actual setting of the fuel temperature SCRAM depends on the LSSS for that core loading and the location of the instrumented fuel element (see TS 2.2).

Table 2a
Minimum Reactor Safety System Channels

Channel	Number Operable	Function	Effective Mode MN, AU	Pulse	SW
Fuel Temperature	1	SCRAM ≤ 650°C*	X	X	X
High Power	2	SCRAM ≤ 110% of maximum reactor operational power not to exceed 1.1 MW	X		X
Detector Power Supply	1	SCRAM on failure of supply voltage	X		X
SCRAM Bar on Console	1	Manual SCRAM	X	X	X
Preset Timer	1	Transient Rod SCRAM 15 seconds or less after pulse		X	
Watchdog Circuit	1	SCRAM on software or self-check failure	X	X	X

* The limit of 650°C SHALL be reduced as required by TS 2.2.

Table 2b
Minimum Reactor Interlocks

Channel	Number Operable	Function	Effective Mode MN, AU	Pulse	SW
Source Level	1	Prevent rod withdrawal without a neutron-induced signal on the log power channel	X		
Pulse Mode Inhibit	1	Prevent pulsing from levels above 1 kW		X	
Transient Rod	1	Prevent applications of air unless cylinder is fully inserted	X		
Shim, Safety, and Regulating Rod	1	Prevent movement of any rod except the transient rod		X	
Simultaneous Rod Withdrawal	1	Prevent simultaneous manual withdrawal of two rods	X		X

b. The maximum reactor operational power may be administratively limited to less than 1 MW depending on TS 3.1.5.b. The high power SCRAMs SHALL be set to no more than 110% of the administratively limited maximum reactor operational power if it is less than 1 MW.

c. Operation of the reactor is prevented by SCRAM if there is a failure of the detector power supply for the reactor safety system channels.

d. The manual SCRAM allows the operator to shut down the reactor in any mode of operation if an unsafe or abnormal condition occurs.

e. The preset timer ensures that the transient rod will be inserted and the reactor will remain at low power after pulsing.

f. The watchdog circuit will SCRAM the reactor if the software or the self-checks fail (see Safety Analysis Report, Chapter 7).

g. The interlock to prevent startup of the reactor without a neutron-induced signal ensures that sufficient neutrons are available for proper startup in all allowable modes of operation.

h. The interlock to prevent the initiation of a pulse above 1 kW is to ensure that fuel temperature is approximately pool temperature when a pulse is performed. This is to ensure that the safety limit is not reached.

i. The interlock to prevent application of air to the transient rod unless the cylinder is fully inserted is to prevent pulsing the reactor in the manual control or automatic control mode.

j. In the pulse mode, movement of any rod except the transient rod is prevented by an interlock. This interlock action prevents the addition of reactivity other than with the transient rod.

k. Simultaneous manual withdrawal of two rods is prevented to ensure the reactivity rate of insertion is not exceeded.

3.2.5 Core Loading and Unloading Operation

Applicability

This specification applies to the source level interlock.

Objective

The objective of this specification is to allow bypass of the source level interlock during operations with a subcritical core.

Specification

During core loading and unloading operations when the reactor is subcritical, the source level interlock may be momentarily defeated using a spring loaded switch in accordance with the fuel loading procedure.

Basis

During core loading and unloading, the reactor is subcritical. Thus, momentarily defeating the source level interlock is a safe operation. Should the core become inadvertently supercritical, the accidental insertion of reactivity will not allow fuel temperature to exceed the 1150°C safety limit because no single TRIGA fuel element is worth more than 1% $\Delta k/k$ (~$1.43) in the most reactive core position.

3.2.6 SCRAM Time

Applicability

This specification applies to the time required to fully insert any control rod to a full down position from a full up position.

Objective

The objective is to achieve rapid shutdown of the reactor to prevent fuel damage.

Specification

The time from SCRAM initiation to the full insertion of any control rod from a full up position SHALL be less than 1 second.

Basis

This specification ensures that the reactor will be promptly shut down when a SCRAM signal is initiated. Experience and analysis, Safety Analysis Report, Chapter 13, have indicated that for the range of transients anticipated for a TRIGA reactor, the specified SCRAM time is adequate to ensure the safety of the reactor. If the SCRAM signal is initiated at 1.1 MW, while the control rod is being withdrawn, and the negative reactivity is not inserted until the end of the one second rod drop time, the maximum fuel temperature does not reach the safety limit.

3.3 Coolant System

3.3.1 Coolant Level Limits

Applicability

This specification applies to operation of the reactor with respect to a required depth of water above the top of the bottom grid plate.

Objective

The objective is to ensure that water is present to provide adequate personnel shielding and core cooling when the reactor is operated, and during a LOCA.

Specification

The reactor SHALL NOT be operated with less than 18 ft. of water above the top of the bottom grid plate.

Basis

When the water is more than approximately 18 ft. above the top of the bottom grid plate, the water provides sufficient shielding to protect personnel during operation at 1 MW, and core cooling is achieved with natural circulation of the water through the core. Should the water level drop below approximately 18.25 ft. above the top of the bottom grid plate while operating at 1 MW, a low pool level alarm (see TS 3.3.2) will alert the operator who is required by administratively approved procedure to shut down the reactor. Once this alarm occurs it will take longer than 1300 seconds before the core is completely uncovered because of a break in the 6" pipe connected to the bottom of the pool. Tests and calculations show that, during a LOCA, 680 seconds is sufficient decay time after shutdown (see Safety Analysis Report, Chapter 13) to prevent the fuel temperature from reaching 950°C. To prevent cladding rupture, the fuel and the cladding temperature must not exceed 950°C (it is assumed that the fuel and the cladding are the same temperature during air cooling).

3.3.2 Detection of Leak or Loss of Coolant

Applicability

This specification applies to detecting a pool water loss.

Objective

The objective is to detect the loss of a significant amount of pool water.

Specification

A pool level alarm SHALL be activated and corrective action taken when the pool level drops 26 cm from a level where the pool is full.

Basis

The alarm occurs when the water level is approximately 18.25 ft. above the top of the bottom grid plate. The point at which the pool is full is approximately 19.1 ft. above the top of the bottom grid plate. The reactor staff SHALL take action to keep the core covered with water according to existing procedures. The alarm is also transmitted to the Police Services annunciator panel which is monitored 24 hrs. a day. The alarm provides a signal that occurs at all times. Thus, the alarm provides time to initiate corrective action before the radiation from the core poses a serious hazard.

3.3.3 Fission Product Activity

Applicability

This specification applies to the detection of fission product activity.

Objective

The objective is to ensure that fission products from a leaking fuel element are detected to provide opportunity to take protective action.

Specification

An air particulate monitor SHALL be operating in the reactor bay whenever the reactor is operating. An alarm on this unit SHALL activate a building evacuation alarm.

Basis

This unit will be sensitive to airborne radioactive particulate matter containing fission products and fission gases and will alert personnel in time to take protective action.

3.3.4 Pool Water Supply for Leak Protection

Applicability

This specification applies to pool water supplies for the reactor pool for leak protection.

Objective

The objective is to ensure that a supply of water is available to replenish reactor pool water in the event of pool water leakage.

Specification

A source of water of at least 100 GPM SHALL be available either from the University water supply or by diverting the heat exchanger secondary flow to the pool.

Basis

Provisions for both of these supplies are in place and will supply more than the specified flow rate. This flow rate will be more than sufficient to handle leak rates that have occurred in the past or any anticipated leak that might occur in the future.

3.3.5 Coolant Conductivity Limits

Applicability

This specification applies to the conductivity of the water in the pool.

Objectives

The objectives are:

a. To prevent activated contaminants from becoming a radiological hazard, and

b. To help preclude corrosion of fuel cladding and other primary system components.

Specification

The reactor SHALL NOT be operated if the conductivity of the bulk pool water is greater than 5 microsiemens/cm (5 micromhos/cm).

Basis

Experience indicates that 5 microsiemens/cm is an acceptable level of water contaminants in an aluminum/stainless steel system such as that at the PSBR. Based on experience, activation at this level does not pose a significant radiological hazard, and significant corrosion of the stainless steel fuel cladding will not occur when the conductivity is below 5 microsiemens/cm.

3.3.6 Coolant Temperature Limits

Applicability

This specification applies to the pool water temperature.

Objective

The objective is to maintain the pool water temperature at a level that will not cause damage to the demineralizer resins.

Specification

An alarm SHALL annunciate and corrective action SHALL be taken if during operation the bulk pool water temperature reaches 140°F (60°C).

Basis

This specification is primarily to preserve demineralizer resins. Information available indicates that temperature damage will be minimal up to this temperature.

3.4 Confinement

Applicability

This specification applies to reactor bay doors.

Objective

The objective is to ensure that no large air passages exist to the reactor bay during reactor operation.

Specifications

The reactor bay truck door SHALL be closed and the reactor bay personnel doors SHALL NOT be blocked open and left unattended if either of the following conditions are true.

a. The reactor is not secured, or

b. Irradiated fuel or a fueled experiment with significant fission product inventory is being moved outside containers, systems or storage areas.

Basis

This specification helps to ensure that the air pressure in the reactor bay is lower than the remainder of the building and the outside air pressure. Controlled air pressure is maintained by the air exhaust system and ensures controlled release of any airborne radioactivity.

3.5 Engineered Safety Features - Ventilation Systems

Applicability

This specification applies to the operation of the reactor bay heating ventilation and exhaust system and the emergency exhaust system.

Objective

The objective is to mitigate the consequences of the release of airborne radioactive materials resulting from reactor operation.

Specification

a. The reactor SHALL NOT be operated unless reactor bay differential pressure is negative.

Upon discovery of no operating exhaust fans, restore a reactor bay exhaust fan to operation within one hour or shut down the reactor.

b. Except for periods of time less than 48 hours during maintenance or repair, the emergency exhaust system SHALL be operable.

c. If irradiated fuel or a fueled experiment with significant fission product inventory is being moved outside containers, systems or storage areas, at least one reactor bay exhaust fan SHALL be operating and the emergency exhaust system SHALL be operable.

Upon discovery of no operating reactor bay exhaust fans OR discovery of an inoperable emergency exhaust system, immediately place the fuel or fueled experiment in a safe storage location and cease further movements until compliance with 3.5.c is restored.

Basis

a. During normal operation, the concentration of airborne radioactivity in unrestricted areas is below effluent release limits as described in the Safety Analysis Report, Chapter 13. The operation of any of the reactor bay exhaust fans, either the reactor bay heating ventilation and exhaust system or emergency exhaust system, will maintain this condition and provide confinement as defined by TS 1.1.8. If all exhaust from the reactor bay is temporarily lost, the one hour time limit to restore exhaust gives the operators time to investigate and respond. Reactor bay area radiation and/or particulate radiation monitors will continue to assure than an unrecognized hazardous condition does not develop.

b. In the event of a substantial release of airborne radioactivity, an air radiation monitor and/or an area radiation monitor will sound a building evacuation alarm which will alert personnel and automatically cause the reactor bay heating ventilation and exhaust system to shut down. The emergency exhaust system will start and the exhausted air will be passed through the emergency exhaust system filters before release. This reduces the radiation within the building. The filters will remove $\approx$ 90% all of the particulate fission products that escape to the atmosphere.

The emergency exhaust system activates only during an evacuation whereupon all personnel are required to evacuate the building (TS 3.6.2). If there is an evacuation while the emergency exhaust system is out of service for maintenance or repair, personnel evacuation is not prevented.

In the unlikely event an accident occurs during emergency exhaust system maintenance or repair, the public dose will be equivalent to or less than that calculated in the Safety Analysis Report, Chapter 13.

c. During irradiated fuel or fueled experiment movement, the likelihood of an event releasing fission products is increased. Therefore the continuous operation of a reactor bay exhaust fan and the availability of an operable filtered exhaust is prudent. If the system fails or is discovered to be inoperable during movement activities, the fuel or fueled experiment must be immediately placed in a safe storage location. No additional movements may be conducted until the limiting condition for operation is satisfied.

Amendment 38
October 12, 2012

3.6 Radiation Monitoring System

3.6.1 Radiation Monitoring Information

Applicability

This specification applies to the radiation monitoring information which must be available to the reactor operator during reactor operation.

Objective

The objective is to ensure that sufficient radiation monitoring information is available to the operator to ensure personnel radiation safety during reactor operation.

Specification

The reactor SHALL NOT be operated unless the radiation monitoring channels listed in Table 3 are operating.

Table 3
Radiation Monitoring Channels

Radiation Monitoring Channels	Function	Number
Area Radiation Monitor	Monitor radiation levels in the reactor bay.	**1**
Continuous Air (Radiation) Monitor	Monitor radioactive particulates in the reactor bay air.	**1**
Neutron Beam Laboratory Monitor	Monitor radiation in the Beamhole Laboratory (required only when the laboratory is in use.)	**1**

Basis

a. The radiation monitors provide information to operating personnel of any impending or existing danger from radiation so that there will be sufficient time to evacuate the facility and to take the necessary steps to control the spread of radioactivity to the surroundings.

b. The area radiation monitor in the Neutron Beam Laboratory provides information to the user and to the reactor operator when this laboratory is in use.

3.6.2 Evacuation Alarm

Applicability

This specification applies to the evacuation alarm.

Objective

The objective is to ensure that all personnel are alerted to evacuate the PSBR building when a potential radiation hazard exists within this building.

Specification

The reactor SHALL NOT be operated unless the evacuation alarm is operable and audible to personnel within the PSBR building when activated by the radiation monitoring channels in Table 3 or a manual switch.

Basis

The evacuation alarm produces a loud pulsating sound throughout the PSBR building when there is any impending or existing danger from radiation. The sound notifies all personnel within the PSBR building to evacuate the building as prescribed by the PSBR emergency procedure.

3.6.3 Argon-41 Discharge Limit

Applicability

This specification applies to the concentration of Argon-41 that may be discharged from the PSBR.

Objective

The objective is to ensure that the health and safety of the public is not endangered by the discharge of Argon-41 from the PSBR.

Specification

All Argon-41 concentrations produced by the operation of the reactor SHALL be below the limits imposed by 10 CFR Part 20 when averaged over a year.

Basis

The maximum allowable concentration of Argon-41 in air in unrestricted areas as specified in Appendix B, Table 2 of 10 CFR Part 20 is 1.0×10^{-8} μCi/ml. Measurements of Argon-41 have been made in the reactor bay when the reactor operates at 1 MW. These measurements show that the concentrations averaged over a year produce less than 1.0×10^{-8} μCi/ml in an unrestricted area (see Environmental Impact Appraisal, December 12, 1996).

3.6.4 As Low As Reasonably Achievable (ALARA)

Applicability

This specification applies to all reactor operations that could result in occupational exposures to radiation or the release of radioactive effluents to the environs.

Objective

The objective is to maintain all exposures to radiation and release of radioactive effluents to the environs ALARA.

Specification

An ALARA program SHALL be in effect.

Basis

Having an ALARA program will ensure that occupational exposures to radiation and the release of radioactive effluents to the environs will be ALARA. Having such a formal program will keep the staff cognizant of the importance to minimize radiation exposures and effluent releases.

3.7 Limitations of Experiments

Applicability

These specifications apply to experiments installed in the reactor and its experimental facilities.

Objective

The objective is to prevent damage to the reactor and to minimize release of radioactive materials in the event of an experiment failure.

Specifications

The reactor SHALL NOT be operated unless the following conditions governing experiments exist:

a. The reactivity of a movable experiment and/or movable portions of a secured experiment plus the maximum allowed pulse reactivity SHALL be less than 2.45% $\Delta k/k$ (~\$3.50). However, the reactivity of a movable experiment and/or movable portions of a secured experiment SHALL have a reactivity worth less than 1.4% $\Delta k/k$ (~\$2.00). During measurements made to determine specific worth, this specification is suspended provided the reactor is operated at power levels no greater than 1 kW. When a movable experiment is used, the maximum allowed pulse SHALL be reduced below the allowed pulse reactivity insertion of 2.45% $\Delta k/k$ (~\$3.50) to ensure that the sum is less 2.45% $\Delta k/k$ (~\$3.50).

b. A single secured experiment SHALL be limited to a maximum of 2.45% Δk/k (~$3.50). The sum of the reactivity worth of all experiments SHALL be less than 2.45% Δk/k (~$3.50). During measurements made to determine experimental worth, this specification is suspended provided the reactor is operated at power levels no greater that 1 kW.

c. When the keff of the core is less than 1 (one) with all control rods at their upper limit and no experiments in or near the core, secured negative reactivity experiments may be added without limit.

d. An experiment may be irradiated or an experimental facility may be used in conjunction with the reactor provided its use does not require a license amendment, as described in 10 CFR 50.59, "Changes, Tests and Experiments." The failure mechanisms that SHALL be analyzed include, but are not limited to corrosion, overheating, impact from projectiles, chemical, and mechanical explosions.

   Explosive material SHALL NOT be stored or used in the facility without proper safeguards to prevent release of fission products or loss of reactor shutdown capability.

   If an experimental failure occurs which could lead to the release of fission products or the loss of reactor shutdown capability, physical inspection SHALL be performed to determine the consequences and the need for corrective action. The results of the inspection and any corrective action taken SHALL be reviewed by the Director or a designated alternate and determined to be satisfactory before operation of the reactor is resumed.

e. Experiment materials, except fuel materials, which could off-gas, sublime, volatilize, or produce aerosols under (1) normal operating conditions of the experiment and reactor, (2) credible accident conditions in the reactor, or (3) possible accident conditions in the experiment, SHALL be limited in activity such that the airborne concentration of radioactivity averaged over a year SHALL NOT exceed the limit of Appendix B Table 2 of 10 CFR Part 20.

   When calculating activity limits, the following assumptions SHALL be used:

   1) If an experiment fails and releases radioactive gases or aerosols to the reactor bay or atmosphere, 100% of the gases or aerosols escape.

   2) If the effluent from an experimental facility exhausts through a holdup tank which closes automatically on high radiation level, at least 10% of the gaseous activity or aerosols produced will escape.

   3) If the effluent from an experimental facility exhausts through a filter installation designed for greater than 99% efficiency for 0.3 micron particles, at least 10% of these vapors can escape.

   4) For materials whose boiling point is above 130°F and where vapors formed by boiling this material can escape only through an undisturbed column of water above the core, at least 10% of these vapors can escape.

f. Each fueled experiment SHALL be controlled such that the total inventory of iodine isotopes 131 through 135 in the experiment is no greater than 1.5 curies. In addition, any fueled experiment which would generate an inventory of more than 5 millicuries (mCi) of I-131 through I-135 SHALL be reviewed to ensure that in the case of an accident, the total release of iodine will not exceed that postulated for the MHA (see Safety Analysis Report, Chapter 13).

Basis

a. This specification limits the sum of the reactivities of a maximum allowed pulse and a movable experiment to the specified maximum reactivity of the transient rod. This limits the effects of a pulse simultaneous with the failure of the movable experiment to the effects analyzed for a 2.45% Δk/k (~$3.50) pulse. In addition, the maximum power attainable with the ramp insertion of 1.4% Δk/k (~$2.00) is less than 500 kW starting from critical.

b. The maximum worth of all experiments is limited to 2.45% Δk/k (~$3.50) so that their inadvertent sudden removal from the cold critical reactor will not result in the reactor achieving a power level high enough to exceed the temperature safety limit (1150°C). The worth of a single secured experiment is limited to the allowed pulse reactivity insertion as an increased measure of safety. Should the 2.45% Δk/k, (~$3.50) reactivity be inserted by a ramp increase, the maximum power attainable is less than 1 MW.

c. Since the initial core is subcritical, adding and then inadvertently removing all negative reactivity experiments leaves the core in its initial subcritical condition.

d. The design basis accident is the MHA (See Safety Analysis Report, Chapter 13). A chemical explosion (such as detonated TNT) or a mechanical explosion (such as a steam explosion or a high pressure gas container explosion) may release enough energy to cause release of fission products or loss of reactor shutdown capability. A projectile with a large amount of kinetic energy could cause release of fission products or loss of reactor shutdown capability. Accelerated corrosion of the fuel cladding due to material released by a failed experiment could also lead to release of fission products.

   If an experiment failure occurs a special investigation is required to ensure that all effects from the failure are known before operation proceeds.

e. This specification is intended to reduce the likelihood that airborne activities in excess of the limits of Appendix B Table 2 of 10 CFR Part 20 will be released to the atmosphere outside the facility boundary.

f. The 5 mCi limitation on I-131 through I-135 ensures that in the event of failure of a fueled experiment, the exposure dose at the exclusion area boundary will be less than that postulated for the MHA (See Safety Analysis Report, Chapter 13) even if the iodine is released in the air.

4.0 SURVEILLANCE REQUIREMENTS

IF a Surveillance Requirement(s) is not accomplished in the specified interval that prohibits reactor operation; **THEN** the reactor SHALL NOT be operated until the Surveillance Requirement(s) is satisfied EXCEPT as required to accomplish the required Surveillance(s).

4.1 Reactor Parameters

4.1.1 Reactor Power Calibration

Applicability

This specification applies to the surveillance of the reactor power calibration.

Objective

The objective is to verify the performance and operability of the power measuring channel.

Specification

A thermal power channel calibration SHALL be made on the linear power level monitoring channel biennially, not to exceed 30 months.

Basis

The thermal power level channel calibration will ensure that the reactor is operated at the authorized power levels.

4.1.2 Reactor Excess Reactivity

Applicability

This specification applies to surveillance of core excess reactivity.

Objective

The objective is to ensure that the reactor excess reactivity does not exceed the Technical Specifications and the limit analyzed in Safety Analysis Report, Chapter 13.

Specification

The excess reactivity of the core SHALL be measured annually, not to exceed 15 months, and following core or control rod changes equal to or greater than 0.7% $\Delta k/k$ (~$1.00).

Basis

Excess reactivity measurements on this schedule ensure that no unexpected changes have occurred in the core and the core configuration does not exceed excess reactivity limits established in the TS 3.1.2.

4.1.3 TRIGA Fuel Elements

Applicability

This specification applies to the surveillance requirements for the TRIGA fuel elements.

Objective

The objective is to verify the continuing integrity of the fuel element cladding.

Specification

Fuel elements and control rods with fuel followers SHALL be inspected visually for damage or deterioration and measured for length and bend in accordance with the following:

a. Before being placed in the core for the first time or before return to service.

b. Every two years, not to exceed 30 months, or at intervals not to exceed the sum of $3,500 in pulse reactivity, whichever comes first, for elements with a NP greater than 1 (one) and for control rods with fueled followers.

c. Every four years, not to exceed 54 months, for elements with a NP of 1 (one) or less.

d. Upon being removed from service. Those removed from service are then exempt from further inspection.

Basis

The frequency of inspection and measurement schedule is based on the parameters most likely to affect the fuel cladding of a pulsing reactor operated at moderate pulsing levels and utilizing fuel elements whose characteristics are well known.

4.2 Reactor Control and Safety System

4.2.1 Reactivity Worth

Applicability

This specification applies to the reactivity worth of the control rods.

Objective

The objective is to ensure that the control rods are capable of maintaining the reactor subcritical.

Specification

The reactivity worth of each control rod and the shutdown margin for the core loading in use SHALL be determined annually, not to exceed 15 months, or following core or control rod changes equal to or greater than 0.7% $\Delta k/k$ (~$1.00).

Basis

The reactivity worth of the control rod is measured to ensure that the required shutdown margin is available and to provide an accurate means for determining the core excess reactivity, maximum reactivity, reactivity insertion rates, and the reactivity worth of experiments inserted in the core.

4.2.2 Reactivity Insertion Rate

Applicability

This specification applies to control rod movement speed.

Objective

The objective is to ensure that the reactivity addition rate specification is not violated and that the control rod drives are functioning.

Specification

The rod drive speed both up and down and the time from SCRAM initiation to the full insertion of any control rod from the full up position SHALL be measured annually, not to exceed 15 months, or when any significant work is done on the rod drive or the rod.

Basis

This specification ensures that the reactor will be promptly shut down when a SCRAM signal is initiated. Experience and analysis have indicated that for the range of transients anticipated for a TRIGA reactor, the specified SCRAM time is adequate to ensure the safety of the reactor. It also ensures that the maximum reactivity addition rate specification will not be exceeded.

4.2.3 Reactor Safety System

Applicability

The specifications apply to the surveillance requirements for measurements, channel tests, and channel checks of the reactor safety systems and watchdog circuit.

Objective

The objective is to verify the performance and operability of the systems and components that are directly related to reactor safety.

Specifications

a. A channel test of the SCRAM function of the wide range linear, power range linear, fuel temperature, manual, and preset timer safety channels SHALL be made on each day that the reactor is to be operated, or prior to each operation that extends more than one day.

b. A channel test of the detector power supply SCRAM functions for both the wide range and the power range and the watchdog circuit SHALL be performed annually, not to exceed 15 months.

c. Channel checks for operability SHALL be performed daily on fuel element temperature, wide range linear power, wide range log power, wide range reactor period/SUR, and power range linear power when the reactor is to be operated, or prior to each operation that extends more than one day.

d. The power range channel SHALL be compared with other independent channels for proper channel indication, when appropriate, each time the reactor is operated.

e. The pulse peak power channel SHALL be compared to the fuel temperature each time the reactor is pulsed, to ensure proper peak power channel operation.

Basis

System components have proven operational reliability.

a. Daily channel tests ensure accurate SCRAM functions and ensure the detection of possible channel drift or other possible deterioration of operating characteristics.

b. An annual channel test of the detector power supply SCRAM will ensure that this system works, based on past experience as recorded in the operation log book. An annual channel test of the watchdog circuit is sufficient to ensure operability.

c. The channel checks will make information available to the operator to ensure safe operation on a daily basis or prior to an extended run.

d. Comparison of the percent power channel with other independent power channels will ensure the detection of channel drift or other possible deterioration of its operational characteristics.

e. Comparison of the peak pulse power to the fuel temperature for each pulse will ensure the detection of possible channel drift or deterioration of its operational characteristics.

4.2.4 Reactor Interlocks

Applicability

These specifications apply to the surveillance requirements for the reactor control system interlocks.

Objective

The objective is to ensure performance and operability of the reactor control system interlocks.

Specifications

a. A channel check of the source interlock SHALL be performed each day that the reactor is operated or prior to each operation that extends more than one day except when the neutron signal is greater than the setpoint when the source is removed from the core.

b. A channel test SHALL be performed semi-annually, not to exceed 7 1/2 months, on the pulse mode inhibit interlock which prevents pulsing from power levels higher than one kilowatt.

c. A channel check SHALL be performed semi-annually, not to exceed 7 1/2 months, on the transient rod interlock which prevents application of air to the transient rod unless the cylinder is fully inserted.

d. A channel check SHALL be performed semi-annually, not to exceed 7 1/2 months, on the rod drive interlock which prevents movement of any rod except the transient rod in pulse mode.

e. A channel check SHALL be performed semi-annually, not to exceed 7 1/2 months, on the rod drive interlock which prevents simultaneous manual withdrawal of more than one rod.

Basis

The channel test and checks will verify operation of the reactor interlock system. Experience at the PSBR indicates that the prescribed frequency is adequate to ensure operability.

After extended operation, the photo neutron source strength may be high enough that removing the source may not drop the neutron signal below the setpoint of the source interlock. With a large intrinsic source there is no practical way to channel check the source interlock. In this case there is no need for a source interlock.

4.2.5 Overpower SCRAM

Applicability

This specification applies to the high power and fuel temperature SCRAM channels.

Objective

The objective is to verify that high power and fuel temperature SCRAM channels perform the SCRAM functions.

Specification

The high power and fuel temperature SCRAMs SHALL be tested annually, not to exceed 15 months.

Basis

Experience with the PSBR for more than a decade, as recorded in the operation log books, indicates that this interval is adequate to ensure operability.

4.2.6 Transient Rod Test

Applicability

These specifications apply to surveillance of the transient rod mechanism.

Objective

The objective is to ensure that the transient rod drive mechanism is maintained in an operable condition.

Specifications

a. The transient rod system SHALL be verified operable on each day that the reactor is pulsed.

b. The transient rod drive cylinder and the associated air supply system SHALL be inspected, cleaned, and lubricated as necessary, and at least annually, not to exceed 15 months.

c. The reactor SHALL be pulsed annually, not to exceed 15 months, to compare fuel temperature measurements and peak power levels with those of previous pulses of the same reactivity value or the reactor SHALL NOT be pulsed until such comparative pulse measurements are performed.

Basis

Functional checks along with periodic maintenance ensure repeatable performance. The reactor is pulsed at suitable intervals and a comparison made with previous similar pulses to determine if changes in transient rod drive mechanism, fuel, or core characteristics have taken place.

4.3 Coolant System

4.3.1 Fire Hose Inspection

Applicability

This specification applies to the dedicated fire hoses used to supply water to the pool in an emergency.

Objective

The objective is to ensure that these hoses are operable.

Specification

The two (2) dedicated fire hoses that provide supply water to the pool in an emergency SHALL be visually inspected for damage and wear annually, not to exceed 15 months.

Basis

This frequency is adequate to ensure that significant degradation has not occurred since the previous inspection.

4.3.2 Pool Water Temperature

Applicability

This specification applies to pool water temperature.

Objective

The objective is to limit pool water temperature.

Specification

The pool temperature alarm SHALL be calibrated annually, not to exceed 15 months.

Basis

Experience has shown this instrument to be drift-free and that this interval is adequate to ensure operability.

4.3.3 Pool Water Conductivity

Applicability

This specification applies to surveillance of pool water conductivity.

Objective

The objective is to ensure that pool water mineral content is maintained at an acceptable level.

Specification

Pool water conductivity SHALL be measured and recorded daily when the reactor is to be operated, or at monthly intervals when the reactor is shut down for this time period.

Basis

Based on experience, observation at these intervals provides acceptable surveillance of limits that ensure that fuel clad corrosion and neutron activation of dissolved materials will not occur.

4.3.4 Pool Water Level Alarm

Applicability

This specification applies to the surveillance requirements for the pool level alarm.

Objective

The objective is to verify the operability of the pool water level alarm.

Specification

The pool water level alarm SHALL be channel checked monthly, not to exceed 6 weeks, to ensure its operability.

Basis

Experience, as exhibited by past periodic checks, has shown that monthly checks of the pool water level alarm ensures operability of the system during the month.

4.4 Confinement

Applicability

This specification applies to reactor bay doors.

Objective

The objective is to ensure that reactor bay doors are kept closed as per TS 3.4.

Specification

Doors to the reactor bay SHALL be locked or under supervision by an authorized keyholder.

Basis

A keyholder is authorized by the Director or his designee.

4.5 Ventilation Systems

Applicability

These specifications apply to the reactor bay heating ventilation and exhaust system and emergency exhaust system.

Objective

The objective is to ensure the proper operation of the reactor bay heating ventilation and exhaust system and emergency exhaust system in controlling releases of radioactive material to the uncontrolled environment.

Specifications

a. It SHALL be verified monthly, not to exceed 6 weeks, whenever operation is scheduled, that the emergency exhaust system is operable with correct pressure drops across the filters (as specified in procedures).

b. It SHALL be verified monthly, not to exceed 6 weeks, whenever operation is scheduled, that the reactor bay heating ventilation and exhaust system is secured when the emergency exhaust system activates during an evacuation alarm (See TS 3.6.2 and TS 5.5).

c. Reactor bay differential pressure monitors SHALL be calibrated annually, not to exceed 15 months.

Basis

Experience, based on periodic checks performed over years of operation, has demonstrated that a test of the exhaust systems on a monthly basis, not to exceed 6 weeks, is sufficient to ensure the proper operation of the systems. This provides reasonable assurance on the control of the release of radioactive material. Annual calibration of the differential pressure sensors will ensure the accurate assessment of reactor bay negative pressure as required by TS 3.5.

4.6 Radiation Monitoring System and Effluents

4.6.1 Radiation Monitoring System and Evacuation Alarm

Applicability

This specification applies to surveillance requirements for the area radiation monitor, the Neutron Beam Laboratory radiation monitor, the air radiation monitor, and the evacuation alarm.

Objective

The objective is to ensure that the radiation monitors and evacuation alarm are operable and to verify the appropriate alarm settings.

Specification

The area radiation monitor, the Neutron Beam Laboratory radiation monitor, the
continuous air (radiation) monitor, and the evacuation alarm system SHALL be channel tested monthly not to exceed 6 weeks. They SHALL be verified to be operable by a channel check daily when the reactor is to be operated, and SHALL be calibrated annually, not to exceed 15 months.

Basis

Experience has shown this frequency of verification of the radiation monitor set points and operability and the evacuation alarm operability is adequate to correct for any variation in the system due to a change of operating characteristics. Annual channel calibration ensures that units are within the specifications defined by procedures.

4.6.2 Argon-41

Applicability

This specification applies to surveillance of the Argon-41 produced during reactor operation.

Objective

To ensure that the production of Argon-41 does not exceed the limits specified by 10 CFR Part 20.

Specification

The production of Argon-41 SHALL be measured and/or calculated for each new experiment or experimental facility that is estimated to produce a dose greater than 1 mrem at the exclusion boundary.

Basis

One (1) mrem dose per experiment or experimental facility represents 1% of the maximum 10 CFR Part 20 annual dose. It is considered prudent to analyze the Argon-41 production for any experiment or experimental facility that exceeds 1% of the annual limit.

4.6.3 ALARA

Applicability

This specification applies to the surveillance of all reactor operations that could result in occupational exposures to radiation or the release of radioactive effluents to the environs.

Objective

The objective is to provide surveillance of all operations that could lead to occupational exposures to radiation or the release of radioactive effluents to the environs.

Specification

As part of the review of all operations, consideration SHALL be given to alternative operational modes that might reduce staff exposures, release of radioactive materials to the environment, or both.

Basis

Experience has shown that experiments and operational requirements can, in many cases, be satisfied with a variety of combinations of facility options, core positions, power levels, time delays, and effluent or staff radiation exposures. Similarly, overall reactor scheduling achieves significant reductions in staff exposures. Consequently, ALARA must be a part of both overall reactor scheduling and the detailed experiment planning.

4.7 Experiments

Applicability

This specification applies to surveillance requirements for experiments.

Objective

The objective is to ensure that the conditions and restrictions of TS 3.7 are met.

Specification

Those conditions and restrictions listed in TS 3.7 SHALL be considered by the PSBR authorized reviewer before signing the irradiation authorization for each experiment.

Basis

Authorized reviewers are appointed by the facility director.

5.0 DESIGN FEATURES

5.1 Reactor Fuel

Specifications

The individual unirradiated TRIGA fuel elements shall have the following characteristics:

a. The total uranium content SHALL be either 8.5 wt% or 12.0 wt% nominal and enriched to less than 20% uranium-235.

b. The hydrogen-to-zirconium atom ratio (in the ZrHx) SHALL be a nominal 1.65 H atoms to 1.0 Zr atom.

c. The cladding SHALL be 304 stainless steel with a nominal 0.020 inch thickness.

Basis

Nominal values of uranium loading, U-235 enrichment, hydrogen loading and cladding thickness are taken to mean those values specified by the manufacturer as standard values for TRIGA fuel. Minor deviations about these levels may occur due to variations in manufacturing and are not considered to be violations of this specification.

5.2 Reactor Core

Specifications

a. The core SHALL be an arrangement of TRIGA uranium-zirconium hydride fuel-moderator elements positioned in the reactor grid plates.

b. The reflector, excluding experiments and experimental facilities, SHALL be water, or D_2O, or graphite, or any combination of the three moderator materials.

Basis

The arrangement of TRIGA fuel elements positioned in the reactor grid plates ensures that adequate space is maintained for effective cooling. The Mark III TRIGA reactor is an open design without provision for reflector except in the form of natural water used for cooling and graphite elements which may be placed in the grid array. Restrictions on the reflector in this specification ensure any changes are analyzed against the criteria for experiments consistent with TS 3.7.

5.3 Control Rods

Specifications

a. The shim, safety, and regulating control rods SHALL have SCRAM capability and contain borated graphite, B_4C powder, or boron and its compounds in solid form as a poison in stainless steel or aluminum cladding. These rods may incorporate fueled followers which have the same characteristics as the fuel region in which they are used.

b. The transient control rod SHALL have SCRAM capability and contain borated graphite, B_4C powder, or boron and its compounds in a solid form as a poison in an aluminum or stainless steel clad. When used as a transient rod, it SHALL have an adjustable upper limit to allow a variation of reactivity insertions. This rod may incorporate a voided or a solid aluminum follower.

Basis

The poison requirements for the control rods are satisfied by using neutron-absorbing borated graphite, B_4C powder, or boron and its compounds. These materials must be contained in a suitable cladding material, such as aluminum or stainless steel, to ensure mechanical stability during movement and to isolate the poison from the pool water environment. SCRAM capabilities are provided by the rapid insertion of the control rods, which is the primary operational safety feature of the reactor. The transient control rod is designed for use in a pulsing TRIGA reactor and does not by design have a fuel follower.

5.4 Fuel Storage

Specifications

a. All fuel elements SHALL be stored in a geometrical array where the keff is less than 0.8 for all conditions of moderation.

b. Irradiated fuel elements SHALL be stored in an array which SHALL permit sufficient natural convection cooling by water such that the fuel element temperature SHALL NOT reach the safety limit as defined in TS 2.1.

Basis

The limits imposed by this specification are conservative and ensure safe storage and handling of nuclear fuel. GA-5402 "Criticality Safety Guide" places a general limitation on well-moderated U-235 to 300 grams per square foot. A rack of new 12 wt% elements would have no more than 288 grams per square foot. Additional work by General Atomics in 1966 showed that a 2x10 array of 12 wt% elements with no separation would have a keff = 0.7967. Because the fuel racks used for storage have an actual spacing of 2.0 inches and 2.5 inches and vertically offset by 20 inches, the calculations are conservative.

5.5 Reactor Bay and Exhaust Systems

Specifications

a. The reactor SHALL be housed in a room (reactor bay) designed to restrict leakage. The minimum free volume (total bay volume minus occupied volume) in the reactor bay SHALL be 1900 m^3.

b. The reactor bay SHALL be equipped with two exhaust systems. Under normal operating conditions, the reactor bay heating ventilation and exhaust system exhausts unfiltered reactor bay air to the environment releasing it at a point at least 24 feet above ground level. Upon initiation of a building evacuation alarm, the previously mentioned system is automatically secured (fans deenergized and exhaust dampers closed) and an emergency exhaust system automatically starts. The emergency exhaust system is also designed to discharge reactor bay air at a point at least 24 feet above ground level.

Basis

The value of 1900 m^3 for reactor bay free volume is assumed in the SAR 13.1.1 Maximum Hypothetical Accident and is used in the calculation of the radionuclide concentrations for the analysis.

The SAR analysis 13.1.1 Maximum Hypothetical Accident does not take credit for any filtration present in the emergency exhaust system. Although analyzed as a ground release, the height above the ground of the release helps to ensure adequate mixing prior to possible public exposure.

5.6 Reactor Pool Water Systems

Specification

The reactor core SHALL be cooled by natural convective water flow.

Basis

Thermal and hydraulic calculations and operational experience indicate that a compact TRIGA reactor core can be safely operated up to power levels of at least 1.15 MW (thermal) with natural convective cooling.

6.0 ADMINISTRATIVE CONTROLS

6.1 Organization

6.1.1 Structure

The University Vice President for Research Dean of the Graduate School (level 1) has the responsibility for the reactor facility license. The management of the facility is the responsibility of the Director (level 2), who reports to the Vice President for Research, Dean of the Graduate School through the office of the Dean of the College of Engineering. Administrative and fiscal responsibility is within the office of the Dean.

The minimum qualifications for the position of Director of the PSBR are an advanced degree in science or engineering, and 2 years experience in reactor operation. Five years of experience directing reactor operations may be substituted for an advanced degree.

The Manager of Radiation Protection reports through the Director of Environmental Health and Safety, the assistant Vice President for Safety and Environmental Services, and to the Senior Vice President for Finance and Business/Treasurer. The qualifications for the Manager of Radiation Protection position are the equivalent of a graduate degree in radiation protection, 3 to 5 years experience with a broad byproduct material license, and certification by The American Board of Health Physics or eligibility for certification.

6.1.2 Responsibility

Responsibility for the safe operation of the reactor facility SHALL be within the chain of command shown in the organization chart. Individuals at the various management levels, in addition to having responsibility for the policies and operation of the reactor facility, SHALL be responsible for safeguarding the public and facility personnel from undue radiation exposures and for adhering to all requirements of the operating license and technical specifications.

In all instances, responsibilities of one level may be assumed by designated alternates or by higher levels, conditional upon appropriate qualifications.

ORGANIZATION CHART

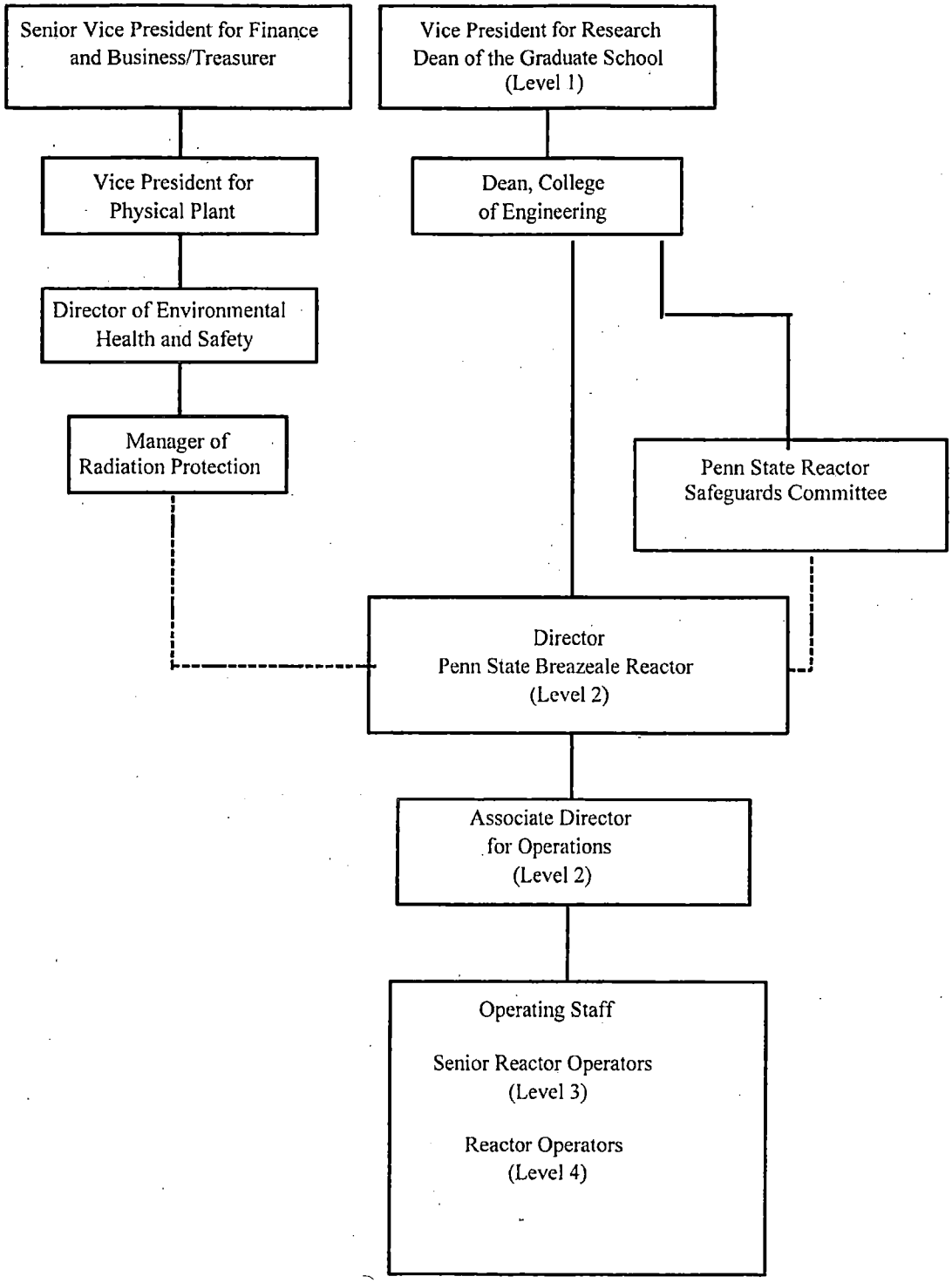

6.1.3 Staffing

a. The minimum staffing when the reactor is not secured SHALL be:

1) A licensed operator present in the control room, in accordance with applicable regulations.

2) A second person present at the facility able to carry out prescribed written instructions.

3) If a senior reactor operator is not present at the facility, one SHALL be available by telephone and able to be at the facility within 30 minutes.

b. A list of reactor facility personnel by name and telephone number SHALL be readily available in the control room for use by the operator. The list SHALL include:

1) Management personnel.

2) Radiation safety personnel.

3) Other operations personnel.

c. Events requiring the direction of a Senior Reactor Operator SHALL include:

1) All fuel or control-rod relocations within the reactor core region.

2) Relocation of any in-core experiment with a reactivity worth greater than one dollar.

3) Recovery from unplanned or unscheduled shutdown (in this instance, documented verbal concurrence from a Senior Reactor Operator is required).

6.1.4 Selection and Training of Personnel

The selection, training, and requalification of operations personnel SHALL meet or exceed the requirements of all applicable regulations and the American National Standard for Selection and Training of Personnel for Research Reactors, ANSI/ANS-15.4-1988, Sections 4-6.

6.2 Review and Audit

6.2.1 Safeguards Committee Composition

A Penn State Reactor Safeguards Committee (PSRSC) SHALL exist to provide an independent review and audit of the safety aspects of reactor facility operations. The committee SHALL have a minimum of 5 members and SHALL collectively represent a broad spectrum of expertise in reactor technology and other science and engineering fields. The committee SHALL have at least one member with health physics expertise. The committee SHALL be appointed by and report to the Dean of the College of Engineering. The PSBR Director SHALL be an ex-officio member of the PSRSC.

6.2.2 Charter and Rules

The operations of the PSRSC SHALL be in accordance with a written charter, including provisions for:

a. Meeting frequency - not less than once per calendar year not to exceed 15 months.

b. Quorums - at least one-half of the voting membership SHALL be present (the Director who is ex-officio SHALL NOT vote) and no more than one-half of the voting members present SHALL be members of the reactor staff.

c. Use of Subgroups - the committee chairman can appoint ad-Hoc committees as deemed necessary.

d. Minutes of the meetings - SHALL be recorded, disseminated, reviewed, and approved in a timely manner.

6.2.3 Review Function

The following items SHALL be reviewed:

a. 10 CFR Part 50.59 reviews of:

1) Proposed changes in equipment, systems, tests, or experiments.

2) All new procedures and major revisions thereto having a significant effect upon safety.

3) All new experiments or classes of experiments that could have a significant effect upon reactivity or upon the release of radioactivity.

b. Proposed changes in technical specifications, license, or charter.

c. Violations of technical specifications, license, or charter. Violations of internal procedures or instructions having safety significance.

d. Operating abnormalities having safety significance.

e. Special reports listed in TS 6.6.2.

f. Audit reports.

6.2.4 Audit

The audit function SHALL be performed annually, not to exceed 15 months, preferably by a non-member of the reactor staff. The audit function SHALL be performed by a person not directly involved with the function being audited. The audit function SHALL include selective (but comprehensive) examinations of operating records, logs, and other documents. Discussions with operating personnel and observation of operations should also be used as appropriate. Deficiencies uncovered that affect reactor safety SHALL promptly be reported to the office of the Dean of the College of Engineering. The following items SHALL be audited:

a. Facility operations for conformance to Technical Specifications, license, and procedures (at least once per calendar year with interval not to exceed 15 months).

b. The requalification program for the operating staff (at least once every other calendar year with the interval not to exceed 30 months).

c. The results of action taken to correct deficiencies that may occur in the reactor facility equipment, systems, structures, or methods of operations that affect reactor safety (at least once per calendar year with the interval not to exceed 15 months).

d. The reactor facility emergency plan and implementing procedures (at least once every other calendar year with the interval not to exceed 30 months).

6.3 Operating Procedures

Written procedures SHALL be reviewed and approved prior to the initiation of activities covered by them in accordance with TS 6.2.3. Written procedures SHALL be adequate to ensure the safe operation of the reactor, but SHALL NOT preclude the use of independent judgment and action should the situation require such. Operating procedures SHALL be in effect and SHALL be followed for at least the following items:

a. Startup, operation, and shutdown of the reactor.

b. Core loading, unloading, and fuel movement within the reactor.

c. Routine maintenance of major components of systems that could have an effect on reactor safety.

d. Surveillance tests and calibrations required by the technical specifications (including daily checkout procedure).

e. Radiation, evacuation, and alarm checks.

f. Release of irradiated samples.

g. Evacuation.

h. Fire or explosion.

i. Gaseous release.

j. Medical emergencies.

k. Civil disorder.

l. Bomb threat.

m. Threat of theft of special nuclear material.

n. Theft of special nuclear material.

o. Industrial sabotage.

p. Experiment evaluation and authorization.

q. Reactor operation using a beam port.

r. D_2O handling.

s. Health physics orientation requirements.

t. Hot cell entry procedure.

u. Implementation of emergency and security plans.

v. Radiation instrument calibration

w. Loss of pool water.

6.4 Review and Approval of Experiments

a. All new experiments SHALL be reviewed for Technical Specifications compliance, 10 CFR Part 50.59 analysis, and approved in writing by level 2 management or designated alternate prior to initiation.

b. Substantive changes to experiments previously reviewed by the PSRSC SHALL be made only after review and approval in writing by level 2 management or designated alternate.

6.5 Required Action

6.5.1 Action to be Taken in the Event the Safety Limit is Exceeded

In the event the safety limit (1150°C) is exceeded:

a. The reactor SHALL be shut down and reactor operation SHALL NOT be resumed until authorized by the U.S. Nuclear Regulatory Commission.

b. The safety limit violation SHALL be promptly reported to level 2 or designated alternates.

c. An immediate report of the occurrence SHALL be made to the Chairman, PSRSC and reports SHALL be made to the USNRC in accordance with TS 6.6.

d. A report SHALL be prepared which SHALL include an analysis of the causes and extent of possible resultant damage, efficacy of corrective action, and recommendations for measures to prevent or reduce the probability of recurrence. This report SHALL be submitted to the PSRSC for review.

6.5.2 Action to be Taken in the Event of a Reportable Occurrence

In the event of a reportable occurrence, (Definition 1.1.34) the following action SHALL be taken:

a. The reactor SHALL be returned to normal or shutdown. If it is necessary to shutdown the reactor to correct the occurrence, operations SHALL NOT be resumed unless authorized by level 2 or designated alternates.

b. The Director or a designated alternate SHALL be notified and corrective action taken with respect to the operations involved.

c. The Director or a designated alternate SHALL notify the office of the Dean of the College of Engineering and the office of the Vice President for Research, Dean of the Graduate School.

d. The Director or a designated alternate SHALL notify the Chairman of the PSRSC.

e. A report SHALL be made to the PSRSC which SHALL include an analysis of the cause of the occurrence, efficacy of corrective action, and recommendations for measures to prevent or reduce the probability of recurrence. This report SHALL be reviewed by the PSRSC at their next meeting.

f. A report SHALL be made to the Document Control Desk, USNRC Washington, DC 20555.

6.6 Reports

6.6.1 Operating Reports

An annual report SHALL be submitted within 6 months of the end of The Pennsylvania State University fiscal year to the Document Control Desk, USNRC, Washington, DC 20555, including at least the following items:

a. A narrative summary of reactor operating experience including the energy produced by the reactor, and the number of pulses ≥ $2.00 but less than or equal to $2.50 and the number greater than $2.50.

b. The unscheduled shutdowns and reasons for them including, where applicable, corrective action taken to preclude recurrence.

c. Tabulation of major preventive and corrective maintenance operations having safety significance.

d. Tabulation of major changes in the reactor facility and procedures, and tabulation of new tests and experiments, that are significantly different from those performed previously and are not described in the Safety Analysis Report, including a summary of the analyses leading to the conclusions that no license amendment, as described in 10 CFR 50.59, was required.

e. A summary of the nature and amount of radioactive effluents released or discharged to environs beyond the effective control of the owner-operator as determined at or before the point of such release or discharge. The summary SHALL include to the extent practicable an estimate of individual radionuclides present in the effluent. If the estimated average release after dilution or diffusion is less than 20 percent of the concentration allowed or recommended, only a statement to this effect need be presented.

f. A summarized result of environmental surveys performed outside the facility.

6.6.2 Special Reports

Special reports are used to report unplanned events as well as planned major facility and administrative changes. These special reports SHALL contain and SHALL be communicated as follows:

a. There SHALL be a report no later than the following working day by telephone to the Operations Center, USNRC, Washington, DC 20555, to be followed by a written report to the Document Control Desk, USNRC, Washington, DC 20555, that describes the circumstances of the event within 14 days of any of the following:

   1) Violation of safety limits (See TS 6.5.1)

   2) Release of radioactivity from the site above allowed limits (See TS 6.5.2)

   3) A reportable occurrence (Definition 1.1.34)

b. A written report SHALL be made within 30 days to the USNRC, and to the offices given in TS 6.6.1 for the following:

   1) Permanent changes in the facility organization involving level 1-2 personnel.

   2) Significant changes in the transient or accident analysis as described in the Safety Analysis Report.

6.7 Records

To fulfill the requirements of applicable regulations, records and logs SHALL be prepared, and retained for the following items:

6.7.1 Records to be Retained for at Least Five Years

a. Log of reactor operation and summary of energy produced or hours the reactor was critical.

b. Checks and calibrations procedure file.

c. Preventive and corrective electronic maintenance log.

d. Major changes in the reactor facility and procedures.

e. Experiment authorization file including conclusions that new tests or experiments did not require a license amendment, as described in 10 CFR 50.59.

f. Event evaluation forms (including unscheduled shutdowns) and reportable occurrence reports.

g. Preventive and corrective maintenance records of associated reactor equipment.

h. Facility radiation and contamination surveys.

i. Fuel inventories and transfers.

j. Surveillance activities as required by the Technical Specifications.

k. Records of PSRSC reviews and audits.

6.7.2 Records to be Retained for at Least One Training Cycle

a. Requalification records for licensed reactor operators and senior reactor operators.

6.7.3 Records to be Retained for the Life of the Reactor Facility

a. Radiation exposure for all facility personnel and visitors.

b. Environmental surveys performed outside the facility.

c. Radioactive effluents released to the environs.

d. Drawings of the reactor facility including changes.

e. Records of the results of each review of exceeding the safety limit, the automatic safety system not functioning as required by TS 2.2, or any limiting condition for operation not being met.

6.0 ENGINEERED SAFETY FEATURES

6.1 Summary Description

The building is constructed of concrete blocks, bricks, insulated steel and aluminum panels, structural steel, and re-enforced concrete and is in general, fireproof in nature. The reactor bay serves as a confinement designed to limit the exchange of effluents with the external environment through controlled or defined pathways. During normal operations,~~T~~ the reactor bay is kept at a negative pressure with respect to the atmosphere by the operation of one or more of ~~two~~ four separate exhaust fans and associated confinement penetrations~~separate ventilation systems. During normal operations the reactor bay is exhausted by at least one of the two roof exhaust fans.~~ Three fans are associated with the Reactor Bay Heating Ventilation air conditioning and Exhaust System (RBHVES) and the other is the Emergency Exhaust System (EES) fan. When the evacuation alarm is actuated, the EES fan starts (if not previously running) and all other fans are shutdown and the ~~their~~ penetrations are closed (via dampers)~~the two roof exhaust fans are automatically secured and an emergency exhaust system is automatically actuated~~, whereby a negative pressure is maintained on the reactor bay and the effluent is exhausted through filters to a stack that exhausts ~~approximately~~ at least 24 feet (7.3 m) above ground level. The reactor bay meets the TS definition 1.1.8, "Confinement means an enclosure on the overall facility which controls the movement of air into and out through a controlled path".

6.2 Detailed Descriptions

6.2.1 Confinement

The ~70,000 feet^3 (1900 m^3) minimum volume reactor bay is maintained at a negative pressure with respect to the remainder of the building by one or more of ~~two~~ four separate exhaust fans~~systems~~ (**see Figure 6-1**). Depending on operational configuration, f~~F~~resh air to the ~~room~~ reactor bay is supplied by leaks around doors~~,~~ and penetrations and by the supply air fan~~etc.~~. Normal heating, cooling, ventilation, and negative pressure of the reactor bay is maintained ~~is~~ by the ~~reactor bay~~ RBHVES~~facility exhaust system (FES).~~. A~~n~~ filtered emergency exhaust system (EES) is also available.

The RBHVES ~~FES~~ functions ~~is~~ are to supply fresh tempered makeup air and to control air flow through the reactor bay to minimize worker radiation exposure and to release the reactor ~~room~~ bay air in a controlled manner (~35~~0~~00 feet^3/min or 9.9~~8.5~~ x 10^4 ℓ/min ~~with both fans running~~) where dilution and diffusion of the effluent occurs before it comes into contact with the public. Argon-41 is the only radioactive gas of significance released during the normal operation of the reactor, and is the result of the action of ~~fast~~ thermal neutrons on air in the reactor pool water and in experimental apparatus. See section 11.1.1.1 for typical Argon-41 annual releases and section 11.1.5 for a discussion of personnel exposures.

The RBHVES contains an exhaust fan and stack that exhausts at reactor bay roof level, a makeup fan with enthalpy wheel, a recirculation fan and associated control dampers. Confinement penetration dampers close to isolate the system on system shutdown or power failure. During

normal operation the balance of fresh makeup air and exhaust air maintains a slight negative pressure in the reactor bay. Two additional roof fans with gravity back-draft dampers are available as backup and to improve heating and cooling efficiency during certain weather conditions. The RBHVES serves no safety function during an airborne release.

When the evacuation alarm system is activated, any operating RBHVES fans are shutdown, associated confinement isolation dampers shut, and the EES system starts. T~~The~~ he EES creates sufficient negative pressure in the reactor bay so that any movement of radioactive material from the bay would be through the system filters. Air enters the EES through a screened opening in the east wall of the reactor bay about ~14 feet (~4~~4.27~~ m) above the bay floor (see Figure 6-2 EES System). The air then passes through a pre-filter, absolute filter, and carbon filter that are mounted in a housing [redacted] The ~~three horsepower~~ exhaust fan (~31400 feet^3/min or ~9.1 x 10^4 ℓ/min with motor operated damper completely open and clean filters) is also mounted there. Flow can be reduced through the system by adjusting the motorized damper (located at the fan suction) open position. Filtered air exhausts into an 18 inch (46 cm) diameter PVC pipe and stack. The stack travels up the [redacted] of the reactor building and exhausts at a point above the reactor bay roof (~3~~~24~~ feet ~~or ~7.3 m~~ above ~~ground~~ reactor bay floor level). [MAT1][MAT2]

The most likely source of significant radioactivity would be failure of fuel element cladding. The EES is normally on standby in the automatic mode. Activation of the system occurs whenever the building evacuation alarm is initiated. The system can also be activated manually from the control panel in the Cobalt-60 facility entrance lobby.

The EES control panel in the Cobalt-60 facility entrance lobby shows the operational status of the EES system. The control panel consists of four differential pressure gauges, three of which show pressure drops across each of the filters. The fourth pressure gauge shows the velocity pressure in the stack. Also located on the control panel are two pilot lights; one indicates that the system is energized, the other indicates flow in the system (by means of a flow switch). A switch that allows the system to be manually activated is also on the panel. Manual start of the EES does not affect the RBHVES system operation.~~The control panel can be viewed with binoculars from outside the reactor building perimeter fence during an evacuation.~~
~~The most likely source of significant radioactivity would be failure of fuel element cladding. The EES is normally on standby in the automatic mode. Activation of the system occurs whenever the building evacuation alarm is initiated. The system can also be activated manually from the control panel in the Cobalt-60 facility entrance lobby~~

The EES three stage filter system is housed in a dust-tight containment. The purpose of the low-cost pre-filter is to filter atmospheric dust that would be deposited in the more expensive absolute filter. Thus, the lifetime of the absolute filter is extended. The high-efficiency absolute filter is needed to remove particulate radiation and has a removal efficiency of 99.9% for .3 micron-sized particles and 99.99% for one micron-sized particles. The carbon filter has a high efficiency for removing fission gases, most importantly the radioiodine.

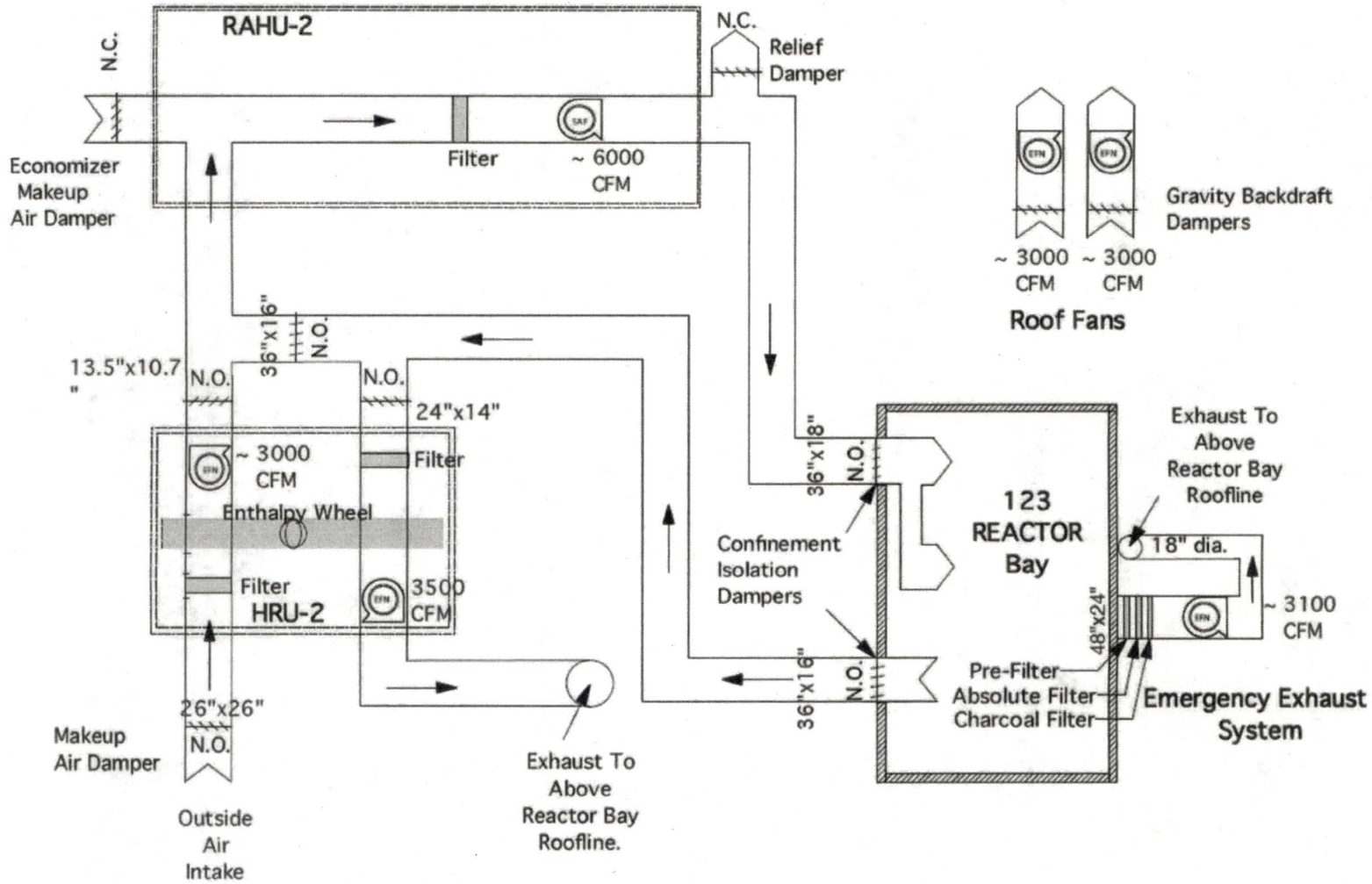

Figure 6-1 Reactor Bay HVAC and Emergency Exhaust Systems

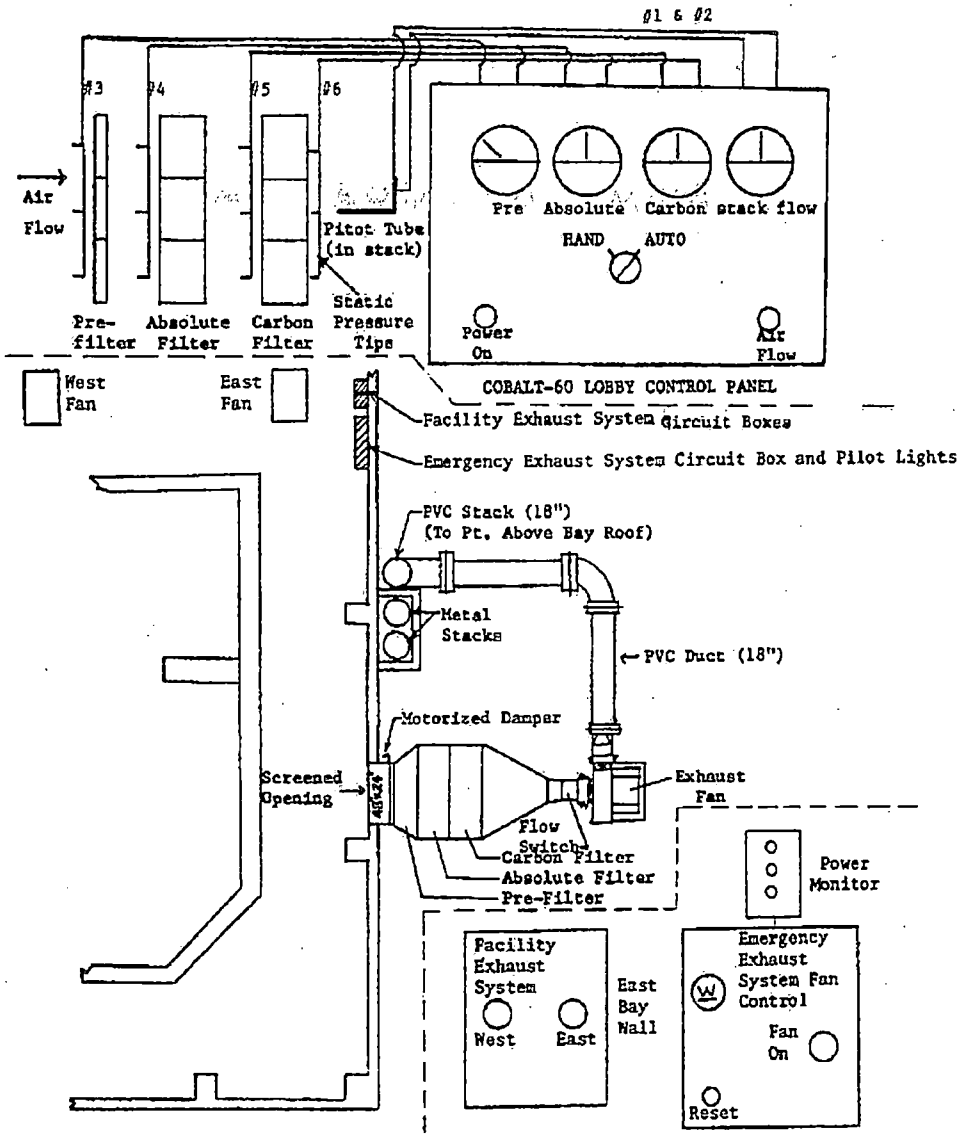

Figure 6-2 Emergency Exhaust System

Static tips are located upstream of the pre-filter, between the pre-filter and the absolute filter, between the absolute filter and the carbon filter, and downstream of the carbon filter. These static tips are connected to three of the differential pressure gauges by copper tubing. A stainless pitot tube mounted in the stack is connected to the fourth differential pressure gauge. As the EES is operated, both the efficiency and the pressure drop across the filters increase due to loading. The filters should be changed when the initial pressure drop (normal operating range for clean filters) has approximately doubled (removal range for spent filters), which is well before the maximum design pressure drop (flag setting) across the filter is exceeded (see **Table 6-1**). Periodic checks of the filter criteria are provided by a PSBR standard operating procedure.

Table 6-1
EES Filter Criteria

	Normal Operating Range (inches H_2O)	Removal Range (inches H_2O)	Flag Setting (inches H_2O)
Pre-filter	.07	.14 - .24	0.42
Absolute Filter	.7	1.4 – 1.5	1.65
Carbon Filter	.6	1.0 – 1.1	1.15
Stack	.2		0.52

The switch on the control panel has two operational modes, auto and ~~manual~~hand. It is not possible to disable the system with this switch. Operating the system using the ~~manual~~ hand mode has no effect on the reactor's operation or any other system.

A Power Monitor box (reactor bay east wall) has three red neon lights that are lit when there is three-phase AC power available to the system. In the auto mode, when an evacuation is initiated, an ~~red fan on~~ indicator ~~light~~ on the emergency exhaust system fan control box (reactor bay east wall) is lit when the emergency exhaust fan is energized~~system has power~~.

Once the EES is energized, it takes ten to fifteen seconds for the EES flow to increase enough to activate the stack flow switch that turns on the red power-on light on the Cobalt-60 lobby control panel. Shortly thereafter, the air flow will stabilize at its normal rate (and the pressure drop gauges will stabilize). A console message "Emerg Ventilation Flow On" (also actuated by the flow switch in the stack) is the positive indication to the reactor operator that the emergency exhaust system is energized and has flow. DCC-X (reactor console digital control computer discussed in Chapter 7) also disables the ~~FES~~ RBHVES if the EES was activated by DCC-X; manually activating the EES does not disable the ~~FES~~RBHVES. ~~When the louvers of the FES close there will be an "East and West Fans Off" message on DCC-X (this is also a reactor scram, see section 7.3.1.3). When the evacuation is cleared by the operator the EES returns to the auto mode and the FES will restart automatically for any fan(s) in operation prior to the evacuation and activation of the EES.~~

The TS describe the requirements for the confinement and for ~~FES~~ RBHVES and EES system operability and periodic surveillance during reactor operation and fuel movement:

- TS 3.4 ~~addresses~~ describes the ventilation and air passages ~~(truck door and doorways)~~ requirements to meet the definition of confinement operability~~assure a negative reactor bay pressure, when the reactor is not secured or when fuel or a fueled experiment is being moved~~.
- TS 3.5 describes requirements for exhaust fan and ~~FES operation and~~ EES operability when the reactor is ~~not~~ operating or ~~secured or~~ irradiated fuel or fueled experiments are being moved.
- TS 4.4 describes the surveillance requirements for verification of confinement status (reactor doors and ~~that reactor bay doors~~penetrations ~~must be locked or under surveillance by an authorized keyholder~~).
- TS 4.5 indicates the surveillance frequencies to ensure the proper operation of the ~~FES~~ RBHVES and the EES in controlling the releases of radioactive material to the uncontrolled environment.
- TS 5.5a describes the confinement as designed to restrict leakage and describes the minimum volume.
- TS 5.5b describes the ~~FES~~ RBHVES and EES systems, and operability during normal and alarm conditions.

~~The basis of the TS provides the background or reason for the above TS.~~

Section 13.1, Accident Analysis, gives a summary of projected radiological exposures from the MHA. This information indicates that even if the EES fails to operate during the MHA, doses to the public are still within 10 CFR 20 limits.

6.2.2 Containment

Not applicable for PSBR.

6.2.3 Emergency Core Cooling System

Not applicable for PSBR.

6.0 ENGINEERED SAFETY FEATURES

6.1 Summary Description

The building is constructed of concrete blocks, bricks, insulated steel and aluminum panels, structural steel, and re-enforced concrete and is in general, fireproof in nature. The reactor bay serves as a confinement designed to limit the exchange of effluents with the external environment through controlled or defined pathways. During normal operations, the reactor bay is kept at a negative pressure with respect to the atmosphere by the operation of one or more of four separate exhaust fans and associated confinement penetrations. Three fans are associated with the Reactor Bay Heating Ventilation air conditioning and Exhaust System (RBHVES) and the other is the Emergency Exhaust System (EES) fan. When the evacuation alarm is actuated, the EES fan starts (if not previously running) and all other fans are shutdown and the penetrations are closed (via dampers), whereby a negative pressure is maintained on the reactor bay and the effluent is exhausted through filters to a stack that exhausts at least 24 feet (7.3 m) above ground level. The reactor bay meets the TS definition 1.1.8, "Confinement means an enclosure on the overall facility which controls the movement of air into and out through a controlled path".

6.2 Detailed Descriptions

6.2.1 Confinement

The ~70,000 feet^3 (1900 m^3) minimum volume reactor bay is maintained at a negative pressure with respect to the remainder of the building by one or more of four separate exhaust fans (**see Figure 6-1**). Depending on operational configuration, fresh air to the reactor bay is supplied by leaks around doors and penetrations and by the supply air fan. Normal heating, cooling, ventilation, and negative pressure of the reactor bay is maintained by the RBHVES. A filtered emergency exhaust system (EES) is also available.

The RBHVES functions are to supply fresh tempered makeup air and to control air flow through the reactor bay to minimize worker radiation exposure and to release the reactor bay air in a controlled manner (~3500 feet^3/min or 9.9 x 10^4 ℓ/min) where dilution and diffusion of the effluent occurs before it comes into contact with the public. Argon-41 is the only radioactive gas of significance released during the normal operation of the reactor, and is the result of the action of thermal neutrons on air in the reactor pool water and in experimental apparatus. See section 11.1.1.1 for typical Argon-41 annual releases and section 11.1.5 for a discussion of personnel exposures.

The RBHVES contains an exhaust fan and stack that exhausts at reactor bay roof level, a makeup fan with enthalpy wheel, a recirculation fan and associated control dampers. Confinement penetration dampers close to isolate the system on system shutdown or power failure. During normal operation the balance of fresh makeup air and exhaust air maintains a slight negative pressure in the reactor bay. Two additional roof fans with gravity back-draft dampers are available as backup and to improve heating and cooling efficiency during certain weather conditions. The RBHVES serves no safety function during an airborne release.

When the evacuation alarm system is activated, any operating RBHVES fans are shutdown, associated confinement isolation dampers shut, and the EES system starts. The EES creates sufficient negative pressure in the reactor bay so that any movement of radioactive material from the bay would be through the system filters. Air enters the EES through a screened opening in the east wall of the reactor bay about ~14 feet (~4 m) above the bay floor (see Figure 6-2 EES System). The air then passes through a pre-filter, absolute filter, and carbon filter that are mounted in a housing [redacted] The exhaust fan (~3100 feet^3/min or ~9.1 x 10^4 ℓ/min with motor operated damper completely open and clean filters) is also mounted there. Flow can be reduced through the system by adjusting the motorized damper (located at the fan suction) open position. Filtered air exhausts into an 18 inch (46 cm) diameter PVC pipe and stack. The stack travels up the [redacted] of the reactor building and exhausts at a point above the reactor bay roof (~34 feet above reactor bay floor level).

The most likely source of significant radioactivity would be failure of fuel element cladding. The EES is normally on standby in the automatic mode. Activation of the system occurs whenever the building evacuation alarm is initiated. The system can also be activated manually from the control panel in the Cobalt-60 facility entrance lobby.
The EES control panel in the Cobalt-60 facility entrance lobby shows the operational status of the EES system. The control panel consists of four differential pressure gauges, three of which show pressure drops across each of the filters. The fourth pressure gauge shows the velocity pressure in the stack. Also located on the control panel are two pilot lights; one indicates that the system is energized, the other indicates flow in the system (by means of a flow switch). A switch that allows the system to be manually activated is also on the panel. Manual start of the EES does not affect the RBHVES system operation.

The EES three stage filter system is housed in a dust-tight containment. The purpose of the low-cost pre-filter is to filter atmospheric dust that would be deposited in the more expensive absolute filter. Thus, the lifetime of the absolute filter is extended. The high-efficiency absolute filter is needed to remove particulate radiation and has a removal efficiency of 99.9% for .3 micron-sized particles and 99.99% for one micron-sized particles. The carbon filter has a high efficiency for removing fission gases, most importantly the radioiodine.

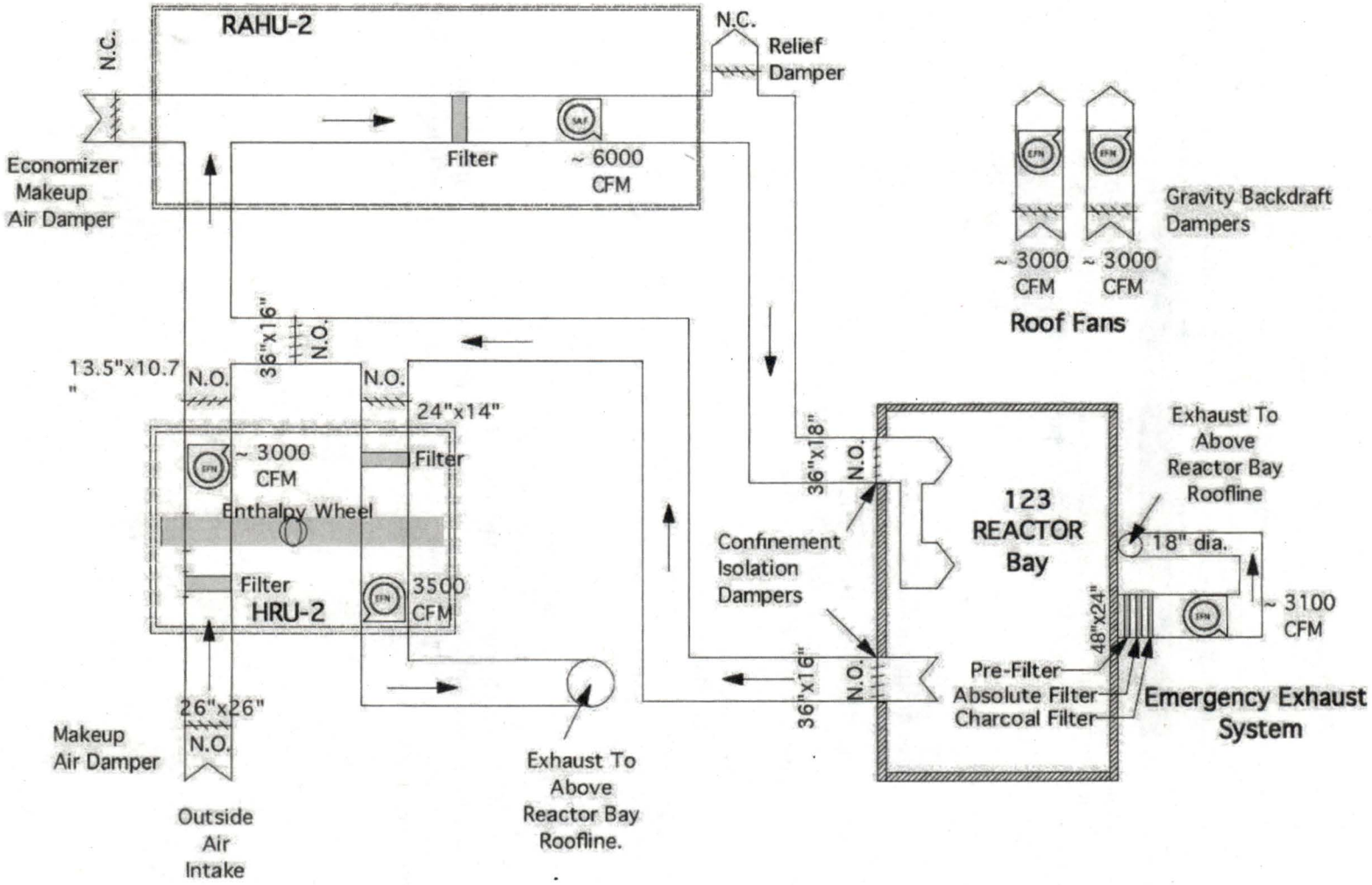

Figure 6-1 Reactor Bay HVAC and Emergency Exhaust Systems

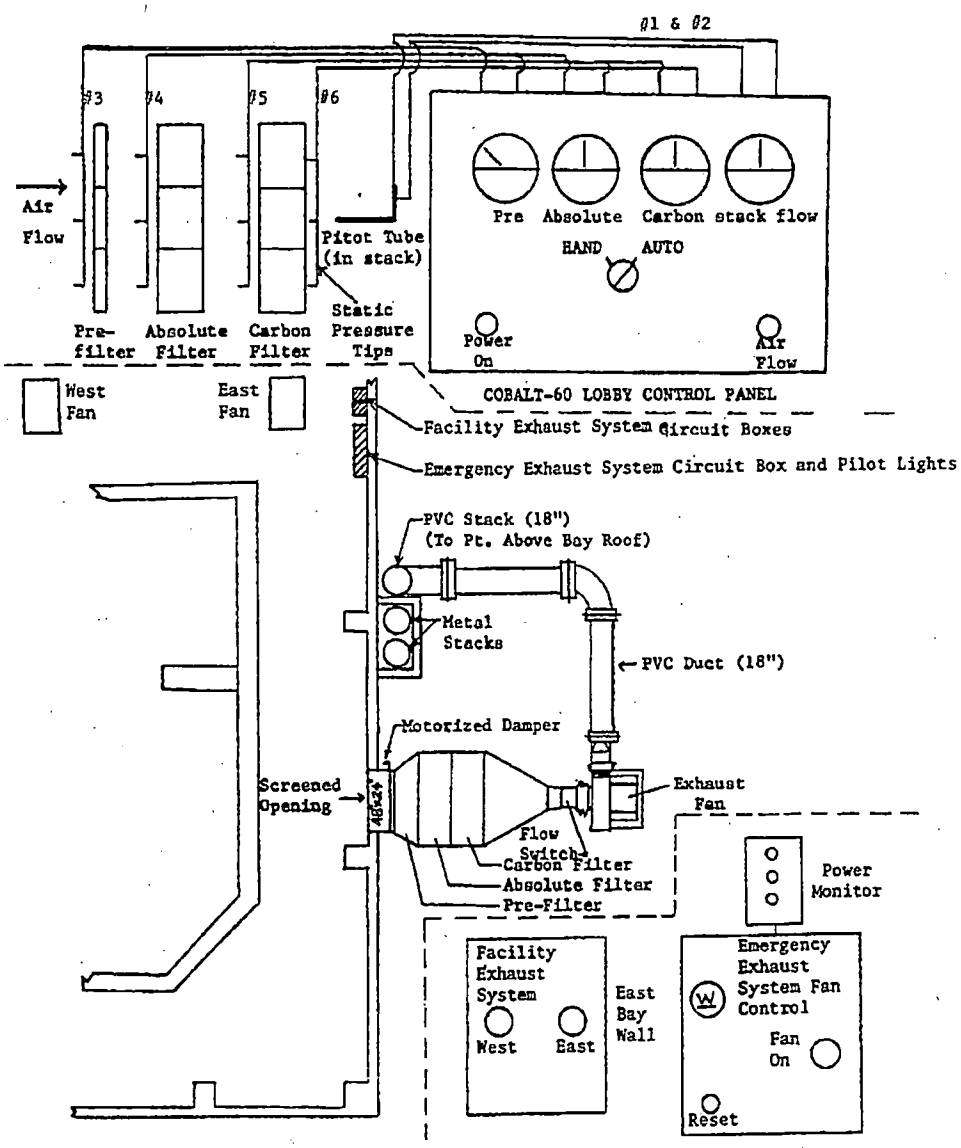

Figure 6-2 Emergency Exhaust System

Static tips are located upstream of the pre-filter, between the pre-filter and the absolute filter, between the absolute filter and the carbon filter, and downstream of the carbon filter. These static tips are connected to three of the differential pressure gauges by copper tubing. A stainless pitot tube mounted in the stack is connected to the fourth differential pressure gauge. As the EES is operated, both the efficiency and the pressure drop across the filters increase due to loading. The filters should be changed when the initial pressure drop (normal operating range for clean filters) has approximately doubled (removal range for spent filters), which is well before the maximum design pressure drop (flag setting) across the filter is exceeded (see **Table 6-1**). Periodic checks of the filter criteria are provided by a PSBR standard operating procedure.

Table 6-1
EES Filter Criteria

	Normal Operating Range (inches H_2O)	Removal Range (inches H_2O)	Flag Setting (inches H_2O)
Pre-filter	.07	.14 - .24	0.42
Absolute Filter	.7	1.4 – 1.5	1.65
Carbon Filter	.6	1.0 – 1.1	1.15
Stack	.2		0.52

The switch on the control panel has two operational modes, auto and hand. It is not possible to disable the system with this switch. Operating the system using the hand mode has no effect on the reactor's operation or any other system.

A Power Monitor box (reactor bay east wall) has three red neon lights that are lit when there is three-phase AC power available to the system. In the auto mode, when an evacuation is initiated, an indicator on the emergency exhaust system fan control box (reactor bay east wall) is lit when the emergency exhaust fan is energized.

Once the EES is energized, it takes ten to fifteen seconds for the EES flow to increase enough to activate the stack flow switch that turns on the red power-on light on the Cobalt-60 lobby control panel. Shortly thereafter, the air flow will stabilize at its normal rate (and the pressure drop gauges will stabilize). A console message "Emerg Ventilation Flow On" (also actuated by the flow switch in the stack) is the positive indication to the reactor operator that the emergency exhaust system is energized and has flow. DCC-X (reactor console digital control computer discussed in Chapter 7) also disables the RBHVES if the EES was activated by DCC-X; manually activating the EES does not disable the RBHVES.

The TS describe the requirements for the confinement and for RBHVES and EES system operability and periodic surveillance during reactor operation and fuel movement:

- TS 3.4 describes the ventilation and air passages requirements to meet the definition of confinement operability.
- TS 3.5 describes requirements for exhaust fan and EES operability when the reactor is operating or irradiated fuel or fueled experiments are being moved.
- TS 4.4 describes the surveillance requirements for verification of confinement status (reactor doors and penetrations).
- TS 4.5 indicates the surveillance frequencies to ensure the proper operation of the RBHVES and the EES in controlling the releases of radioactive material to the uncontrolled environment.
- TS 5.5a describes the confinement as designed to restrict leakage and describes the minimum volume.
- TS 5.5b describes the RBHVES and EES systems, and operability during normal and alarm conditions.

Section 13.1, Accident Analysis, gives a summary of projected radiological exposures from the MHA. This information indicates that even if the EES fails to operate during the MHA, doses to the public are still within 10 CFR 20 limits.

6.2.2 Containment

Not applicable for PSBR.

6.2.3 Emergency Core Cooling System

Not applicable for PSBR.

9. Auxiliary Systems

9.1 Heating, Ventilation, and Air Conditioning Systems

The air in the reactor bay is ~~and control room is~~ heated and cooled by the Reactor Bay Heating, ~~Air Conditioning~~Ventilation, and Exhaust System (RBHVES). The RBHVES (Figure 6-1) is located on the west wing roof over the control room and consists of:

- Two existing powered roof fans (Economizer mode and backup exhaust)
- Heat Recovery Unit (HRU-02 Variable speed exhaust and makeup fans with enthalpy wheel).
- Discharge stack (to above the reactor bay roof height)
- Modulating control dampers (determines makeup, recirculation, exhaust flow and maintains reactor bay at negative pressure)
- Recirculating, heating and cooling unit (RAHU-02 Heating coils, Cooling Coils recirculation fan)
- One new confinement penetration for supply of conditioned air to the reactor bay
- Two fast-closure Confinement isolation dampers
- Makeup air and overpressure relief dampers
- Break away ducting connections (maintains confinement if roof mounted components are damaged by exterior forces)
- Non-visible security features
- Heavy gauge materials through confinement isolation dampers to a break-away feature (ensures that environmental impacts do not create a confinement opening if external ductwork is compromised via high winds)
- Monitoring and control (damper and fan status, occupancy/operation programming, temperature sensors, differential pressure sensors)
- Reactor bay supply and exhaust header duct work
- Split HVAC unit for control room heating and air conditioning

The new system has four basic modes of operation **Secured~~:~~, Occupied, Unoccupied** and **Emergency**.

Secured/Shutdown mode -(also loss of power mode) – fast acting Confinement Dampers shut (monitored and indicted via position switches) at confinement penetrations; fans shutdown, modulating flow control dampers fail as is or move to programmed position; Confinement Damper positions reported to the system control panel.

Occupied – as programmed, whenever the reactor is in operation, or the operators demands occupied, the exhaust/makeup/recirc fans operate to provide 6000 cfm of reactor bay return/exhaust flow. Flow is in through a new return/exhaust screen and ductwork (above the control room), an existing penetration in the waffle structure, new security barrier, and a new (open) confinement damper. At this point, flow is split into return air (recycled for temperature control) and exhaust air. The amount of flow is control by the balanced modulating action of the exhaust and return air dampers in conjunction with the variable speed drive fans. Approximately 3500 cfm of exhaust air goes through the exhaust fan and the enthalpy wheel located in heat recovery unit 2 (HRU-2). HRU-2 recovers usable energy in the exhaust air for use in treatment of ~~mark~~makeup air. Exhaust air leaves HRU-2 and is directed to a new exhaust stack on the southwest corner of the reactor bay. The air exhausts the stack at roof level (greater than 2~~34~~ ft. above ground level) to maintain the original FES exhaust design elevation as described in the SAR.
Filtered Makeup air is drawn through HRU-2 (where exhaust air heat is recovered) past the makeup air modulating damper to mix with return air. The exhaust, return and makeup air work with the variable speed fans to maintain a negative pressure in the reactor bay (more exhaust than makeup).

The combined makeup and return air is drawn into the recirculating air handling unit (RAHU-2) where the air is filtered and temperature is adjusted (heated or cooled) as necessary to follow the temperature program. The supply air is now returned to the reactor bay distribution header through a confinement damper, security barrier and a new confinement penetration.
During programmed weather conditions the control system will secure cooling and operate the existing roof fans with maximum fresh air makeup air (economizer operation) to save energy. Negative pressure in the reactor bay will still be maintained and indicated.

Unoccupied – The system operates as described in occupied above, except that the amount of exhaust and makeup air is reduced to conserve energy and temperature profile adjusted according to program.

Emergency Mode – When the building evacuation system is initiated, the fast acting confinement dampers will close, exhaust, makeup, recirculation and any operating roof fans will shutdown. The filtered emergency exhaust system will operate to provide negative reactor bay pressure. Emergency operation on loss of normal AC power is the same if the diesel operates as designed (and provides A/C power to the EES system). With no power available all fans shutdown and confinement dampers fail closed.

Control Room HVAC – To simplify the system design, a standard split A/C unit with resistance heat has been added to service the control room. A small (4 inch diameter) outside make up air passage is provided. The unit operates in heating or cooling mode as necessary to maintain the control room temperature.
~~a dedicated reactor bay air conditioner. This unit recirculates, heats, cools, and dehumidifies reactor bay air as required, providing an acceptable environment for personnel and equipment.~~

Steam for the heating system is supplied from University power plants located at the east and west ends of the campus. Chilled water for cooling is provided by the west wing chilled water system. The system is controlled by the Reactor Bay Automation System which interfaces with the Building Evacuation system as described above. . ~~No air is interchanged with any other part of the building or outside of the building by this unit. Heating is supplemented by steam unit heaters as needed. The condensate from the reactor bay air conditioner can be piped into the reactor pool as makeup water to help compensate for pool water evaporation.~~ The neutron beam laboratory has a separate air conditioner to provide cooling to that area; ~~heat is supplied to the room by steam unit heaters located near the ceiling.~~ No heating or cooling is provided for the demineralizer room. ~~Steam for the heating system is supplied from University power plants located at the east and west ends of the campus. The reactor bay and neutron beam laboratory HVAC systems cannot operate in any way as to interfere with the reactor bay facility exhaust system or emergency exhaust system (see section 6.2.1). For the case of airborne radioactive materials, any effect the HVAC would have on the distribution and concentration of those materials would be confined to the reactor bay, and would be secondary to the effect of the exhaust systems (see section 6.2.1).~~

9.2 Handling and Storage of Reactor Fuel

Upon removal from the shipping container, new fuel is physically examined and then smear checked for any surface contamination by the Radiation Protection Office (RPO). It is then placed into fuel storage racks in the reactor pool using a PSBR fuel handling tool. An exception would be an instrumented fuel element that would be placed into a reactor bay storage vault until a later time when conduit would be assembled to encase the thermocouple lead wires. All reactor fuel is stored or used in a controlled access area as defined by paragraph 73.2 of title 10 CFR part 73 and the PSBR Physical Security Plan.

The PSBR fuel handling tool was designed by PSU personnel and is based in part on the original General Atomics fuel handling tool design. The tool consists of a 1.25 inch (3.18cm) diameter x 18 feet (5.49m) long aluminum pole with an additional 3 feet (0.9m) long flexible hose section that terminates in a 1 foot (0.3m) long mechanism for gripping the top of the fuel element. The top of the aluminum pole has a rotating disk with positive stops at the fully open (release) and fully closed (element attached) positions.

Technical Specification 5.4 states that:

a. All fuel elements shall be stored in a geometrical array where the k_{eff} is less than 0.8 for all conditions for moderation.
b. Irradiated fuel elements shall be stored in an array which shall permit sufficient natural convection cooling by water such that the fuel element temperature shall not reach the safety limit as defined in Section 2.1 of the TS.

The PSBR uses fuel storage racks based on a General Atomics design, to meet the 0.8 k_{eff} requirement. On file at the PSBR is a letter of March 1, 1966 from Fabian C. Foushee of General Atomics/General Dynamics, subject: "Storage of TRIGA Fuel Elements." Two methods are used to show that the storage is safe. The first method uses a criticality safety limit taken

from a GA document GA-5402, "Criticality Safeguards Guide". This reference gives a very general limitation on the storage of well moderated U-235 as an average of 300 gm of U-235 per square foot of aspect area. Assuming in our case 12 wt% elements containing at most 60 grams of U-235 per element stored in the GA racks, than the concentration of fissile material is 288 gm U-235/sqft. This means that elements can be infinitely long and arranged in an infinite array and meet this safeguards requirement. The second method used was to calculate the k_{eff} of the element storage as an array one element thick and as any array two elements thick. The latter arrangement assumes that two racks (with the standard configuration of 10 elements in a linear array with 2 inches center to center) hanging front to back with no separation (1.47 inches center to center). This arrangement is not physically possible because the front to back spacing can be a minimum of 2.5 inches center to center because of the rack design. Therefore these calculations are conservative. The results for 8.5wt% fuel as stated in the GA letter (Foushee, March 1, 1966) are as follows:

For 8.5 wt% elements	k_{eff}
Plane array one element thick	0.5096
Plane array two elements thick	0.7227

Calculations by Dan Hughes at the PSBR in November 1, 1994, indicate that by increasing the U-235 to 12 wt%, the only factor changed is the thermal utilization (f) which increases by 10.24%.

For 12 wt% elements	k_{eff}
Plane array one element thick	0.5618
Plane array two elements thick	0.7967

These results are not only conservative because the spacing of the racks back to front is assumed at 1.47 inches rather than the 2.5 inches provided by the racks, but the calculations use a homogeneous system rather than a lumped fuel system. In addition, this modification ignored the increased self-shielding of the higher loaded elements. Additional conservatism is added by the fact that the centerlines of the elements in the front and back rows of the storage rack have a 20 inch centerline to centerline vertical separation. **Figure 9-1** shows the elevation view of the storage racks with regard to the [redacted]. The conclusions are that we can be confident that the GA storage racks as now configured in the reactor pool have a k_{eff} less than 0.8 as required by the TS.

The natural convection cooling provided by the reactor pool water is adequate for any stored fuel. Even if the pool water is lost, fuel temperatures in the stored fuel would be much less than in the LOCA discussed in Chapter 13, which happens after prolonged operation at 1 MW(th).

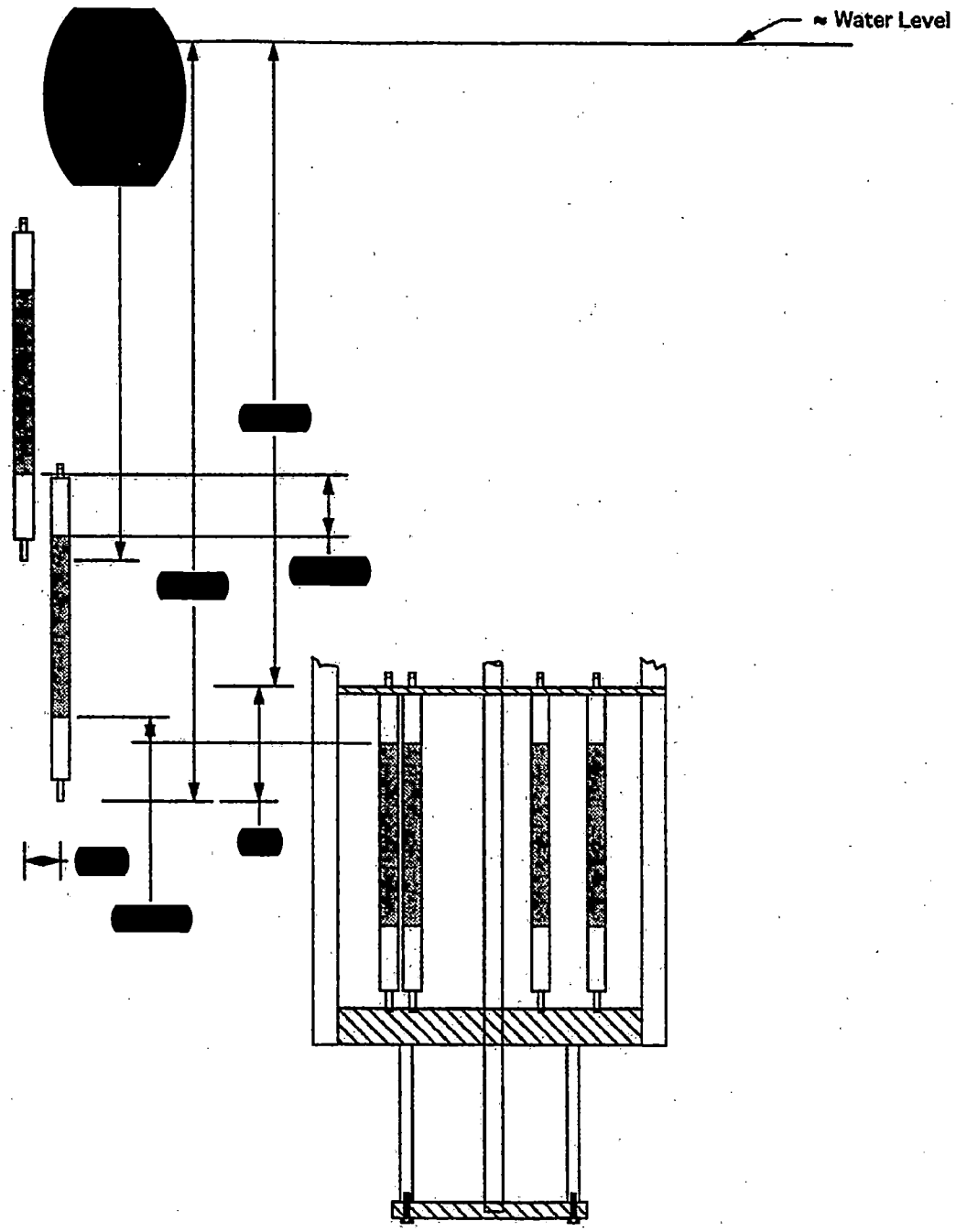

Figure 9-1 Elevation View of Storage Racks

The TS 3.4, 3.5~~b~~, 4.4 and 4.4~~5~~ (chapter 14) give limiting conditions for operations and surveillance requirements to assure the confinement is maintained whenever the reactor is not secured, or fuel or a fueled experiment with significant fission product inventory is being moved outside containers, systems, or storage areas. The bases of the TS serve as the background or reason for the TS requirement. Appropriate PSBR standard operating procedures enforce and reference the TS.

TS 4.1.3 (Chapter 14) gives surveillance requirements for inspection of fuel elements being placed in the core for the first time, periodic inspections while in use, and upon removal from service. There are no TS requirements for inspection of fuel in storage. PSBR administrative procedures require periodic inventory of reactor fuel.

The MHA discussed in Chapter 13, Accident Analyses, discusses the effects of a rupture of a fuel element in air.

No TRIGA fuel has been shipped from the facility to date. It is not expected that DOE would receive any of our spent fuel before 2012. See **Table 11-2** for PSBR Fuel Inventory.

9.3 Fire Protection Systems and Programs

The reactor building is constructed of concrete blocks, bricks, insulated steel and aluminum panels, structural steel, and re-enforced concrete and is in general, fireproof in nature. There is very little flammable material in the reactor bay.

The building (including the reactor bay and control room) is equipped with a comprehensive fire alarm system consisting of manual pull stations and smoke detectors. Smoke detector alarms indicate to a control room panel and a lobby entrance panel in the reactor building and to a University Police panel that is manned 24 hours a day. Pull stations throughout the building assure quick personnel response and smoke detectors help assure early detection of a fire event. Automatic fuse activated sprinkler systems cover Room 117 (a sample preparation laboratory and shipping and receiving area for materials under the R-2 license) and the two facility Hot Cells. The sprinklers also alarm to the aforementioned panels in the reactor building and at University Police. The hot cell sprinklers also sound an alarm bell on the hot cell loading dock. The comprehensive fire alarm system's reliability is maintained by documented periodic operability checks by the University Office of Physical Plant (OPP). The fire alarm system is powered by building power with available diesel generator power if needed (see section 8.1).

Fire extinguishers of either the CO_2 type or compressed air and water type are located at strategic locations throughout the building. Reliability is maintained by documented periodic checks by the OPP personnel. Fire fighting protection for all University buildings, including the reactor building, is provided by the Alpha Fire Company of State College. The firehouse is located approximately 1 1/2 miles (2.5 km) from the reactor building. A fire hydrant is located outside of the reactor site boundary fence, approximately 320 feet (98 m) from the southwest corner of the building.

PSBR Technical Specification 6.3, Operating Procedures, requires the facility to have a procedure for Fire or Explosion. A PSBR emergency procedure fulfills that requirement and provides guidance to the reactor staff for response to a fire alarm, and classifies all rooms in the building as to their potential fire hazard; locations of pull stations, smoke detectors, sprinkler systems, and fire extinguishers are also described. The PSBR Operator and Senior Operator Requalification Program, requires an annual oral exam on all emergency procedures. The PSBR Emergency Plan (EPP), Section 3.1, requires written agreements between the PSBR and the Alpha Fire Company of State College and this requirement is assured by a PSBR administrative procedure that requires periodic renewal of the letter.

The major radioactive inventory under the R-2 license would be the fission product inventory in the reactor fuel elements. No fire event is postulated that could cause damage to the reactor fuel. However under some circumstances a fire could be classified as an Alert or Unusual Event under the EPP (see sections 4.1 and 4.2 of the EPP).

Reactor shutdown is by means of four control rods, three of which are held out of the core by electromagnets. The other rod is held out by compressed air supplied through an electrically operated solenoid valve. The control rods are fail-safe in that failure (due to fire or otherwise) of electrical systems associated with the rods would cause the rods to fall into the core due to gravity. No other safety systems are required by the TS when the reactor is shutdown and no reactor fuel is being moved.

9.4 Communication Systems

The telephone system in the reactor building consists of phones in rooms and laboratories and the system's functionality is maintained for short periods of time by its own UPS system in case of a building power failure. Communication over the facilities Public Address (PA) System is possible using these phones. The PA system is powered by the main facility UPS and therefore the control room microphone should be available at all times. The building evacuation alarm that is initiated by DCC-X also operates over the PA system. Other phones independent of the telephone system are also available in the reactor control room and other areas of the building and operate on phone company voltage.

Two-way radios are available in the Emergency Support Center (ESC) to provide communication among reactor staff during an emergency. These radios can communicate with University Police who normally coordinate activities with other emergency support groups.

9.5 Possession and Use of Byproduct, Source, and Special Nuclear Material

A PSBR administrative procedure identifies rooms or locations where radioactive materials in the facility are considered to be under the R-2 license. This is primarily reactor fuel, reactor core components and support structures, and other materials transported to and from specific facility areas designated in the PSBR procedure. These other materials may include customer samples awaiting shipment and transfer to customer licenses, or experimental apparatus used in the

reactor or neutron beam lab that needs to be taken to other areas for research and development or maintenance and repair. The PSBR administrative procedure assures that rooms assigned for R-2 use have the necessary equipment to monitor the radioactivity.

Many samples made radioactive from exposure to reactor neutrons are transferred to the University's Broad Byproduct License upon removal from the pool. The University Isotope Committee (UIC) authorizes individuals to possess radioactive materials in certain quantities for specific purposes. Byproduct material from the reactor is only released to a person having a valid UIC authorization or to another NRC license.

Storage and use of all radioactive material at the PSBR, is monitored by the university's RPO, including material under the R-2 license.

9.6 Cover Gas Control in Closed Primary Coolant Systems

Not applicable to the PSBR.

9.7 Other Auxiliary Systems

9.7.1 Air Compressors

Compressed air for all facility needs is supplied by two air compressors (**see Figure 9-2**) located in the mechanical equipment room. This room is located under the facility machine shop. Normally, the large air compressor supplies air to the reactor transient rod line and to the line that goes to the remainder of the building, with the small compressor in a standby mode (if the large compressor fails to operate, the small compressor operates automatically as needed). Valves AC-1, AC-2, AC-3, and AC-4 are normally open (closing AC-1 or AC-2 would allow the small air compressor or large air compressor, respectively, to alone supply all transient rod and building air needs if the other compressor is taken out of service). Air from both compressors is treated by particulate filters, an oil filter, and a Hankison Refrigerated Type Compressed Air Dryer, all located in the mechanical equipment room. The large air compressor tank, the small air compressor tank, the Hankison dryer, and the filters in the lines in the mechanical equipment room are automatically relieved of moisture accumulation.

The large air compressor's operation is controlled by that compressor's air pressure switch. The compressor starts at ~95 psig and stops at ~115 psig. The small air compressor's operation is controlled by that compressor's air pressure switch. This compressor starts at ~80 psig and stops at ~105 psig. Since the small compressor starts at ~80 psig, it will only start if the large compressor fails to start at ~95 psig.

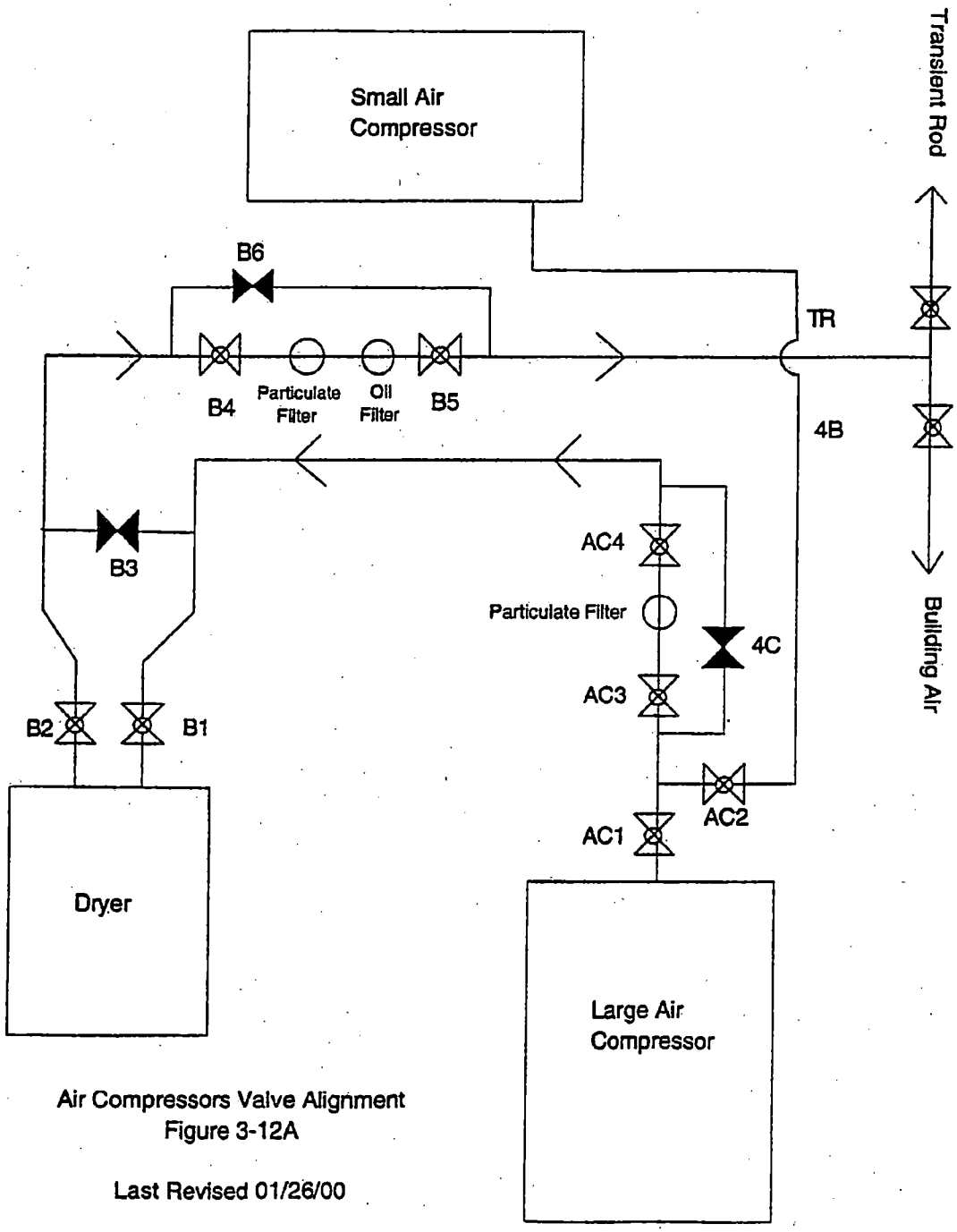

Figure 9-2 Air Compressors Valve Alignment

The building air line goes to a dryer in the machine shop (just outside the door to the demineralizer room), which removes grease and oil, and then the line branches to several building locations. Additional dryers are located in the system as appropriate. These additional dryers are drained to relieve moisture accumulation as per a preventative maintenance schedule. An alarm pressure switch in the building air line in the reactor demineralizer room, provides an input to DCC-X and a "Building Air Supply Pressure Low" message is indicated if air pressure drops to ~90 psig.

The transient rod air line runs from the mechanical equipment room to the air dryer on the reactor bridge, regulator (normal line pressure ~ 80 psig), alarm pressure switch, accumulator tank, solenoid valve and transient rod, in that order. The alarm pressure switch provides an input to DCC-X, and a "Tran Rod Air Supply Press Low" message is indicated if air pressure drops to ~60 psig.

9.7.2 Evaporator - Liquid Radioactive Waste Treatment

The facility does not routinely generate or discharge liquid waste. Small amounts of pool water which has tritium above drinking water standards is either evaporated (in an open tank) or transferred to the PA broad scope~~PS~~ radioactive material license for disposal.~~purpose of the evaporator (see **Figure 9-3**) is to remove water from liquid radioactive waste so that only a small residue of solid radioactive materials remains. Since demineralizer resins are currently replaced when expended and not regenerated, the facility does not normally generate liquid waste in quantities that need evaporation. Currently city water is processed through the evaporator to provide a source of distilled makeup water for the reactor and Co-60 pools.~~ On occasion, reactor pool water that remains in the 48,000 gallon (1.8×10^5 ℓ) hold-up tank following pool water ~~transfers,~~transfers is pumped to the evaporator building 4000 gallon (1.5×10^4 ℓ) floor tank.~~ and later evaporated for pool make-up water.~~

If significant liquid radioactive waste were produced ~~from demineralizer regeneration or other source,~~ it could be sent to either the 2000 gallon (7.6×10^3 ℓ) underground waste hold-up tank near the evaporator building or the 4000 gallon (1.5×10^4 ℓ) waste hold-up tank in the floor of the evaporator building. Liquid waste from either of these two waste hold-up tanks can be processed by a vendeor for disposal or slowly ~~pumped~~evaporated. ~~to the evaporator feed tank by use of the transfer pump. From the feed tank the liquid waste is moved to the evaporator by the feed pump. A level control valve at the evaporator allows only enough of the flow in the feed loop to enter the evaporator to maintain a proper level. An eductor at the evaporator allows for some of the liquid waste in the evaporator to be returned to the feed loop (this allows for a more even mixture in the evaporator and the feed tank). The liquid waste in the evaporator is heated to the boiling point by very hot water passing through heating coils in the evaporator's bottom portion (boiling is aided by maintaining a vacuum in the evaporator). The resultant steam travels to the top portion of the evaporator where it is condensed (with cooling water passing through loops) and collected as distilled water. The distillate pump moves the distilled water to the distillate tank and from there it can flow (by gravity) to the 6000 gallon (2.3×10^4 ℓ) underground processed water tank until it is needed as pool make-up water.~~ Waste residue from the evaporation process would be disposed of as solid waste~~removed from the evaporator, further solidified as needed and disposed by the RPO~~.

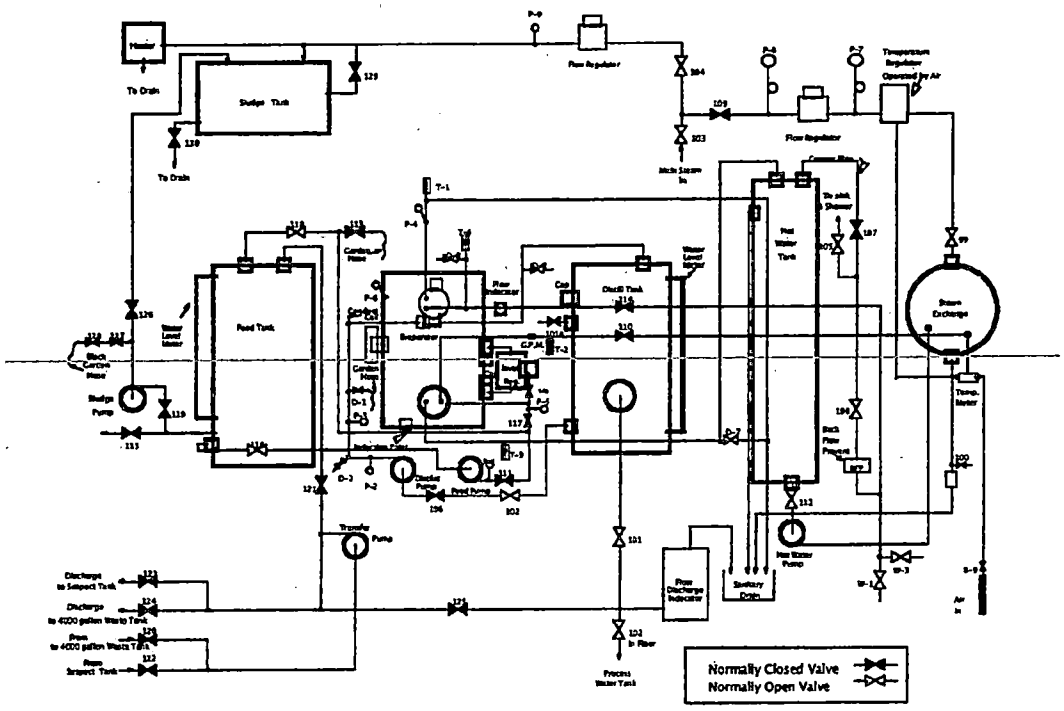

~~Figure 9-3 The PSBR Liquid Waste Evaporator System~~

9.7.3 Reactor Bay Overhead Crane

The reactor bay is equipped with a 3 ton (2722 kg) overhead crane supported by the building structure. The major function of the crane is to move experiments or experimental facilities or parts thereof such as the FFT and FNI shield plugs (see Section 10.2.4). It is also used to position the pool divider gate (see Section 4.3).

9.8 Bibliography

1. Letter of March 1, 1966 from Fabian C. Foushee of General Atomics/General Dynamics, subject: "Storage of TRIGA Fuel Elements."

2. GA Document GA-5402, "Criticality Safeguards Guide."

3. Interoffice Correspondence from Dan Hughes to Marc Voth, November 1, 1994, "GA Fuel Storage Racks."

9. Auxiliary Systems

9.1 Heating, Ventilation, and Air Conditioning Systems

The air in the reactor bay is heated and cooled by the Reactor Bay Heating, Ventilation, and Exhaust System (RBHVES). The RBHVES (Figure 6-1) is located on the west wing roof over the control room and consists of:

- Two existing powered roof fans (Economizer mode and backup exhaust)
- Heat Recovery Unit (HRU-02 Variable speed exhaust and makeup fans with enthalpy wheel),
- Discharge stack (to above the reactor bay roof height)
- Modulating control dampers (determines makeup, recirculation, exhaust flow and maintains reactor bay at negative pressure)
- Recirculating, heating and cooling unit (RAHU-02 Heating coils, Cooling Coils recirculation fan)
- One new confinement penetration for supply of conditioned air to the reactor bay
- Two fast-closure Confinement isolation dampers
- Makeup air and overpressure relief dampers
- Break away ducting connections (maintains confinement if roof mounted components are damaged by exterior forces)
- Non-visible security features
- Heavy gauge materials through confinement isolation dampers to a break-away feature (ensures that environmental impacts do not create a confinement opening if external ductwork is compromised via high winds)
- Monitoring and control (damper and fan status, occupancy/operation programming, temperature sensors, differential pressure sensors)
- Reactor bay supply and exhaust header duct work
- Split HVAC unit for control room heating and air conditioning

The new system has four basic modes of operation **Secured, Occupied, Unoccupied** and **Emergency.**

Secured/Shutdown mode -(also loss of power mode) – fast acting Confinement Dampers shut (monitored and indicted via position switches) at confinement penetrations; fans shutdown, modulating flow control dampers fail as is or move to programmed position; Confinement Damper positions reported to the system control panel.

Occupied – as programmed, whenever the reactor is in operation, or the operators demands occupied, the exhaust/makeup/recirc fans operate to provide 6000 cfm of reactor bay return/exhaust flow. Flow is in through a new return/exhaust screen and ductwork (above the control room), an existing penetration in the waffle structure, new security barrier, and a new (open) confinement damper. At this point, flow is split into return air (recycled for temperature control) and exhaust air. The amount of flow is control by the balanced modulating action of the exhaust and return air dampers in conjunction with the variable speed drive fans. Approximately 3500 cfm of exhaust air goes through the exhaust fan and the enthalpy wheel located in heat recovery unit 2 (HRU-2). HRU-2 recovers usable energy in the exhaust air for use in treatment of makeup air. Exhaust air leaves HRU-2 and is directed to a new exhaust stack on the southwest corner of the reactor bay. The air exhausts the stack at roof level (greater than 24 ft. above ground level) to maintain the original FES exhaust design elevation as described in the SAR.
Filtered Makeup air is drawn through HRU-2 (where exhaust air heat is recovered) past the makeup air modulating damper to mix with return air. The exhaust, return and makeup air work with the variable speed fans to maintain a negative pressure in the reactor bay (more exhaust than makeup).

The combined makeup and return air is drawn into the recirculating air handling unit (RAHU-2) where the air is filtered and temperature is adjusted (heated or cooled) as necessary to follow the temperature program. The supply air is now returned to the reactor bay distribution header through a confinement damper, security barrier and a new confinement penetration.
During programmed weather conditions the control system will secure cooling and operate the existing roof fans with maximum fresh air makeup air (economizer operation) to save energy. Negative pressure in the reactor bay will still be maintained and indicated.

Unoccupied – The system operates as described in occupied above, except that the amount of exhaust and makeup air is reduced to conserve energy and temperature profile adjusted according to program.

Emergency Mode – When the building evacuation system is initiated, the fast acting confinement dampers will close, exhaust, makeup, recirculation and any operating roof fans will shutdown. The filtered emergency exhaust system will operate to provide negative reactor bay pressure. Emergency operation on loss of normal AC power is the same if the diesel operates as designed (and provides A/C power to the EES system). With no power available all fans shutdown and confinement dampers fail closed.

Control Room HVAC – To simplify the system design, a standard split A/C unit with resistance heat has been added to service the control room. A small (4 inch diameter) outside make up air passage is provided. The unit operates in heating or cooling mode as necessary to maintain the control room temperature.

Steam for the heating system is supplied from University power plants located at the east and west ends of the campus. Chilled water for cooling is provided by the west wing chilled water system. The system is controlled by the Reactor Bay Automation System which interfaces with the Building Evacuation system as described above. . The neutron beam laboratory has a separate air conditioner to provide cooling to that area; No heating or cooling is provided for the demineralizer room.

9.2 Handling and Storage of Reactor Fuel

Upon removal from the shipping container, new fuel is physically examined and then smear checked for any surface contamination by the Radiation Protection Office (RPO). It is then placed into fuel storage racks in the reactor pool using a PSBR fuel handling tool. An exception would be an instrumented fuel element that would be placed into a reactor bay storage vault until a later time when conduit would be assembled to encase the thermocouple lead wires. All reactor fuel is stored or used in a controlled access area as defined by paragraph 73.2 of title 10 CFR part 73 and the PSBR Physical Security Plan.

The PSBR fuel handling tool was designed by PSU personnel and is based in part on the original General Atomics fuel handling tool design. The tool consists of a 1.25 inch (3.18cm) diameter x 18 feet (5.49m) long aluminum pole with an additional 3 feet (0.9m) long flexible hose section that terminates in a 1 foot (0.3m) long mechanism for gripping the top of the fuel element. The top of the aluminum pole has a rotating disk with positive stops at the fully open (release) and fully closed (element attached) positions.

Technical Specification 5.4 states that:

a. All fuel elements shall be stored in a geometrical array where the k_{eff} is less than 0.8 for all conditions for moderation.
b. Irradiated fuel elements shall be stored in an array which shall permit sufficient natural convection cooling by water such that the fuel element temperature shall not reach the safety limit as defined in Section 2.1 of the TS.

The PSBR uses fuel storage racks based on a General Atomics design, to meet the 0.8 k_{eff} requirement. On file at the PSBR is a letter of March 1, 1966 from Fabian C. Foushee of General Atomics/General Dynamics, subject: "Storage of TRIGA Fuel Elements." Two methods are used to show that the storage is safe. The first method uses a criticality safety limit taken from a GA document GA-5402, "Criticality Safeguards Guide". This reference gives a very general limitation on the storage of well moderated U-235 as an average of 300 gm of U-235 per square foot of aspect area. Assuming in our case 12 wt% elements containing at most 60 grams of U-235 per element stored in the GA racks, than the concentration of fissile material is 288 gm U-235/sqft. This means that elements can be infinitely long and arranged in an infinite array and meet this safeguards requirement. The second method used was to calculate the k_{eff} of the element storage as an array one element thick and as any array two elements thick. The latter arrangement assumes that two racks (with the standard configuration of 10 elements in a linear array with 2 inches center to center) hanging front to back with no separation (1.47 inches center to center). This arrangement is not physically possible because the front to back spacing can be a minimum of 2.5 inches center to center because of the rack design. Therefore these calculations

are conservative. The results for 8.5wt% fuel as stated in the GA letter (Foushee, March 1, 1966) are as follows:

For 8.5 wt% elements	k_{eff}
Plane array one element thick	0.5096
Plane array two elements thick	0.7227

Calculations by Dan Hughes at the PSBR in November 1, 1994, indicate that by increasing the U-235 to 12 wt%, the only factor changed is the thermal utilization (f) which increases by 10.24%.

For 12 wt% elements	k_{eff}
Plane array one element thick	0.5618
Plane array two elements thick	0.7967

These results are not only conservative because the spacing of the racks back to front is assumed at 1.47 inches rather than the 2.5 inches provided by the racks, but the calculations use a homogeneous system rather than a lumped fuel system. In addition, this modification ignored the increased self-shielding of the higher loaded elements. Additional conservatism is added by the fact that the centerlines of the elements in the front and back rows of the storage rack have a 20 inch centerline to centerline vertical separation. **Figure 9-1** shows the elevation view of the storage racks with regard to [redacted] The conclusions are that we can be confident that the GA storage racks as now configured in the reactor pool have a k_{eff} less than 0.8 as required by the TS.

The natural convection cooling provided by the reactor pool water is adequate for any stored fuel. Even if the pool water is lost, fuel temperatures in the stored fuel would be much less than in the LOCA discussed in Chapter 13, which happens after prolonged operation at 1 MW(th).

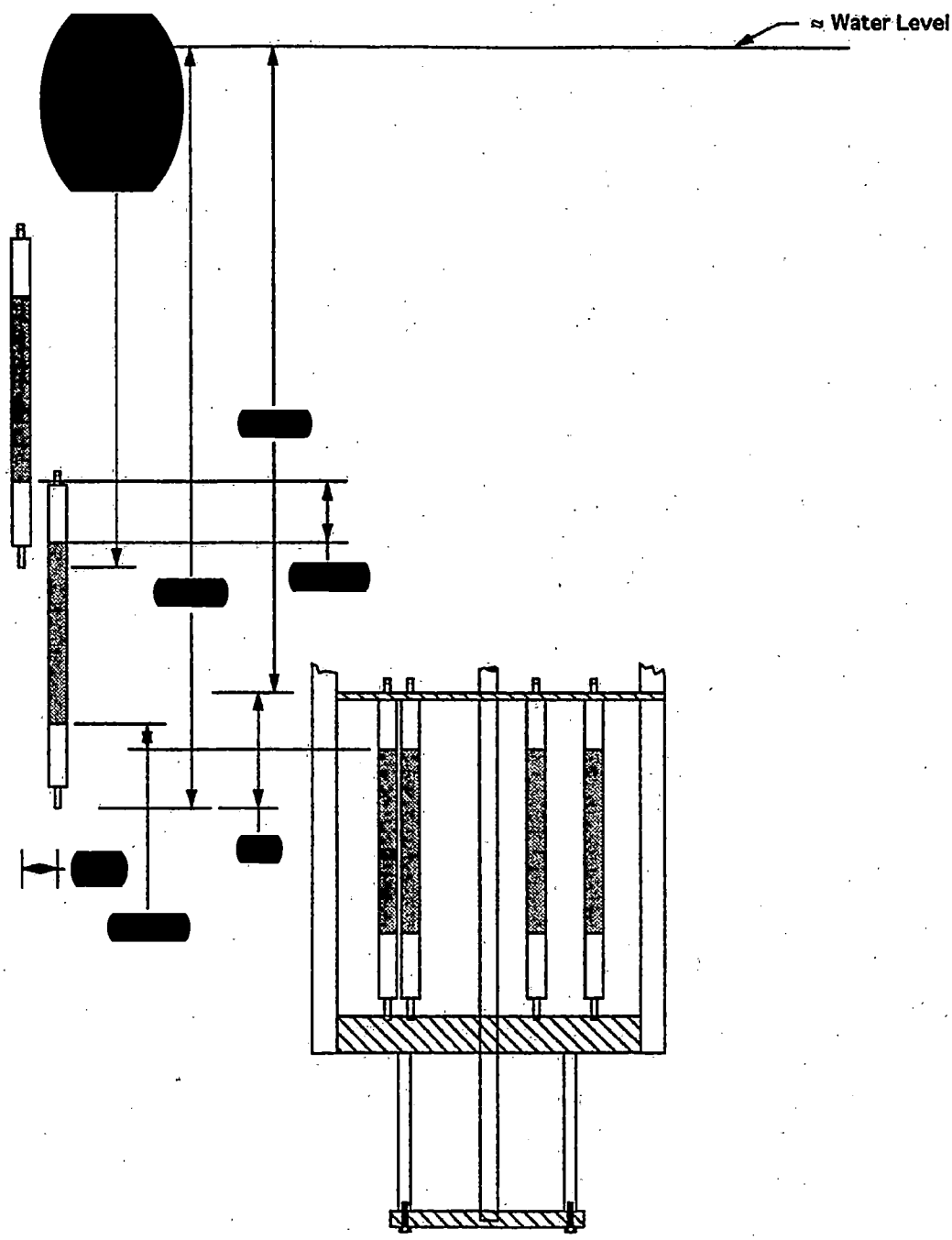

Figure 9-1 Elevation View of Storage Racks

The TS 3.4, 3.5, 4.4 and 4.5 (chapter 14) give limiting conditions for operations and surveillance requirements to assure the confinement is maintained whenever the reactor is not secured, or fuel or a fueled experiment with significant fission product inventory is being moved outside containers, systems, or storage areas. The bases of the TS serve as the background or reason for the TS requirement. Appropriate PSBR standard operating procedures enforce and reference the TS.

TS 4.1.3 (Chapter 14) gives surveillance requirements for inspection of fuel elements being placed in the core for the first time, periodic inspections while in use, and upon removal from service. There are no TS requirements for inspection of fuel in storage. PSBR administrative procedures require periodic inventory of reactor fuel.

The MHA discussed in Chapter 13, Accident Analyses, discusses the effects of a rupture of a fuel element in air.

No TRIGA fuel has been shipped from the facility to date. It is not expected that DOE would receive any of our spent fuel before 2012. See **Table 11-2** for PSBR Fuel Inventory.

9.3 Fire Protection Systems and Programs

The reactor building is constructed of concrete blocks, bricks, insulated steel and aluminum panels, structural steel, and re-enforced concrete and is in general, fireproof in nature. There is very little flammable material in the reactor bay.

The building (including the reactor bay and control room) is equipped with a comprehensive fire alarm system consisting of manual pull stations and smoke detectors. Smoke detector alarms indicate to a control room panel and a lobby entrance panel in the reactor building and to a University Police panel that is manned 24 hours a day. Pull stations throughout the building assure quick personnel response and smoke detectors help assure early detection of a fire event. Automatic fuse activated sprinkler systems cover Room 117 (a sample preparation laboratory and shipping and receiving area for materials under the R-2 license) and the two facility Hot Cells. The sprinklers also alarm to the aforementioned panels in the reactor building and at University Police. The hot cell sprinklers also sound an alarm bell on the hot cell loading dock. The comprehensive fire alarm system's reliability is maintained by documented periodic operability checks by the University Office of Physical Plant (OPP). The fire alarm system is powered by building power with available diesel generator power if needed (see section 8.1).

Fire extinguishers of either the CO_2 type or compressed air and water type are located at strategic locations throughout the building. Reliability is maintained by documented periodic checks by the OPP personnel. Fire fighting protection for all University buildings, including the reactor building, is provided by the Alpha Fire Company of State College. The firehouse is located approximately 1 1/2 miles (2.5 km) from the reactor building. A fire hydrant is located outside of the reactor site boundary fence, approximately 320 feet (98 m) from the southwest corner of the building.

PSBR Technical Specification 6.3, Operating Procedures, requires the facility to have a procedure for Fire or Explosion. A PSBR emergency procedure fulfills that requirement and provides guidance to the reactor staff for response to a fire alarm, and classifies all rooms in the building as to their potential fire hazard; locations of pull stations, smoke detectors, sprinkler systems, and fire extinguishers are also described. The PSBR Operator and Senior Operator Requalification Program, requires an annual oral exam on all emergency procedures. The PSBR Emergency Plan (EPP), Section 3.1, requires written agreements between the PSBR and the Alpha Fire Company of State College and this requirement is assured by a PSBR administrative procedure that requires periodic renewal of the letter.

The major radioactive inventory under the R-2 license would be the fission product inventory in the reactor fuel elements. No fire event is postulated that could cause damage to the reactor fuel. However under some circumstances a fire could be classified as an Alert or Unusual Event under the EPP (see sections 4.1 and 4.2 of the EPP).

Reactor shutdown is by means of four control rods, three of which are held out of the core by electromagnets. The other rod is held out by compressed air supplied through an electrically operated solenoid valve. The control rods are fail-safe in that failure (due to fire or otherwise) of electrical systems associated with the rods would cause the rods to fall into the core due to gravity. No other safety systems are required by the TS when the reactor is shutdown and no reactor fuel is being moved.

9.4 Communication Systems

The telephone system in the reactor building consists of phones in rooms and laboratories and the system's functionality is maintained for short periods of time by its own UPS system in case of a building power failure. Communication over the facilities Public Address (PA) System is possible using these phones. The PA system is powered by the main facility UPS and therefore the control room microphone should be available at all times. The building evacuation alarm that is initiated by DCC-X also operates over the PA system. Other phones independent of the telephone system are also available in the reactor control room and other areas of the building and operate on phone company voltage.

Two-way radios are available in the Emergency Support Center (ESC) to provide communication among reactor staff during an emergency. These radios can communicate with University Police who normally coordinate activities with other emergency support groups.

9.5 Possession and Use of Byproduct, Source, and Special Nuclear Material

A PSBR administrative procedure identifies rooms or locations where radioactive materials in the facility are considered to be under the R-2 license. This is primarily reactor fuel, reactor core components and support structures, and other materials transported to and from specific facility areas designated in the PSBR procedure. These other materials may include customer samples awaiting shipment and transfer to customer licenses, or experimental apparatus used in the

reactor or neutron beam lab that needs to be taken to other areas for research and development or maintenance and repair. The PSBR administrative procedure assures that rooms assigned for R-2 use have the necessary equipment to monitor the radioactivity.

Many samples made radioactive from exposure to reactor neutrons are transferred to the University's Broad Byproduct License upon removal from the pool. The University Isotope Committee (UIC) authorizes individuals to possess radioactive materials in certain quantities for specific purposes. Byproduct material from the reactor is only released to a person having a valid UIC authorization or to another NRC license.

Storage and use of all radioactive material at the PSBR, is monitored by the university's RPO, including material under the R-2 license.

9.6 Cover Gas Control in Closed Primary Coolant Systems

Not applicable to the PSBR.

9.7 Other Auxiliary Systems

9.7.1 Air Compressors

Compressed air for all facility needs is supplied by two air compressors (**see Figure 9-2**) located in the mechanical equipment room. This room is located under the facility machine shop. Normally, the large air compressor supplies air to the reactor transient rod line and to the line that goes to the remainder of the building, with the small compressor in a standby mode (if the large compressor fails to operate, the small compressor operates automatically as needed). Valves AC-1, AC-2, AC-3, and AC-4 are normally open (closing AC-1 or AC-2 would allow the small air compressor or large air compressor, respectively, to alone supply all transient rod and building air needs if the other compressor is taken out of service). Air from both compressors is treated by particulate filters, an oil filter, and a Hankison Refrigerated Type Compressed Air Dryer, all located in the mechanical equipment room. The large air compressor tank, the small air compressor tank, the Hankison dryer, and the filters in the lines in the mechanical equipment room are automatically relieved of moisture accumulation.

The large air compressor's operation is controlled by that compressor's air pressure switch. The compressor starts at ~95 psig and stops at ~115 psig. The small air compressor's operation is controlled by that compressor's air pressure switch. This compressor starts at ~80 psig and stops at ~105 psig. Since the small compressor starts at ~80 psig, it will only start if the large compressor fails to start at ~95 psig.

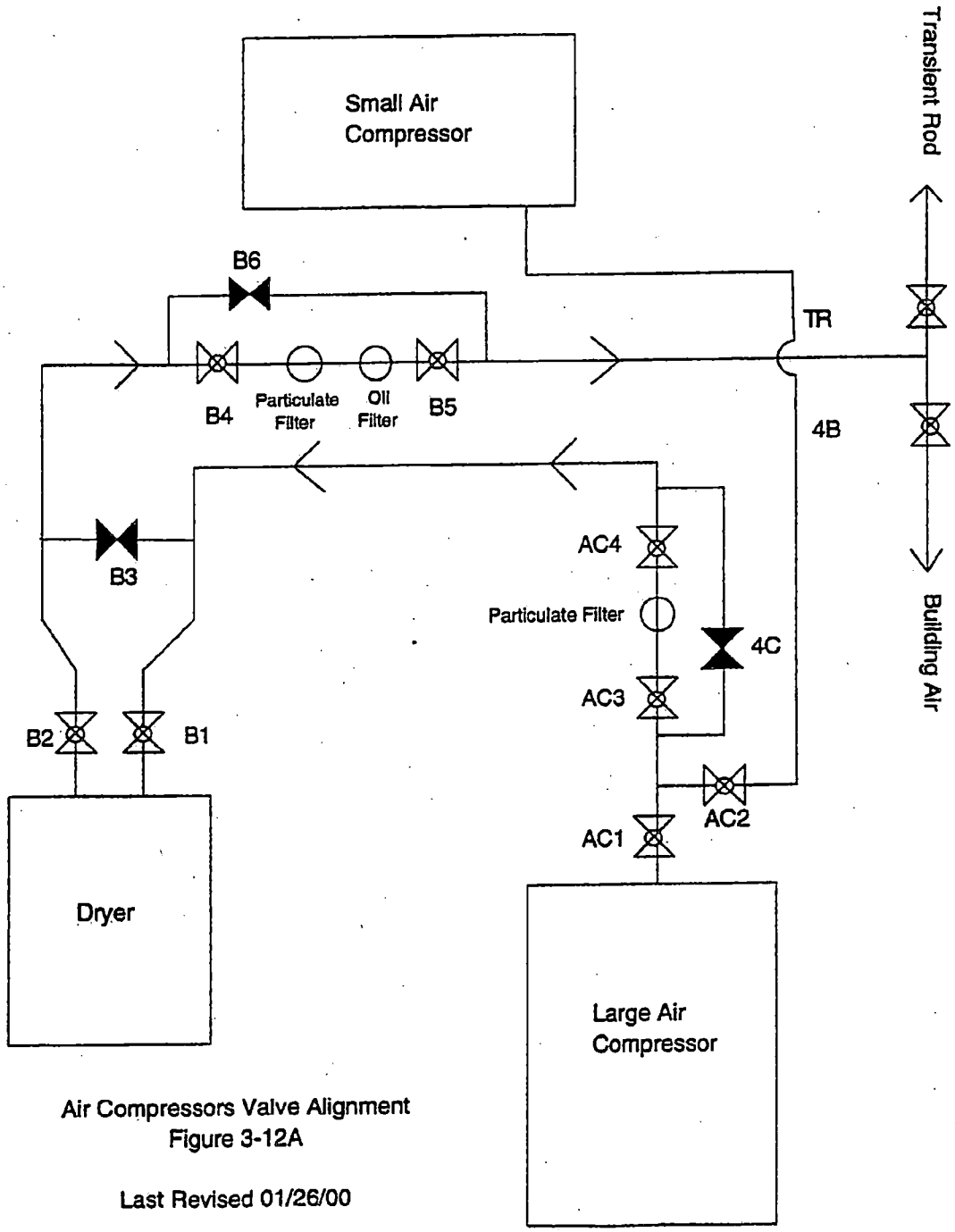

Figure 9-2 Air Compressors Valve Alignment

The building air line goes to a dryer in the machine shop (just outside the door to the demineralizer room), which removes grease and oil, and then the line branches to several building locations. Additional dryers are located in the system as appropriate. These additional dryers are drained to relieve moisture accumulation as per a preventative maintenance schedule. An alarm pressure switch in the building air line in the reactor demineralizer room, provides an input to DCC-X and a "Building Air Supply Pressure Low" message is indicated if air pressure drops to ~90 psig.

The transient rod air line runs from the mechanical equipment room to the air dryer on the reactor bridge, regulator (normal line pressure ~ 80 psig), alarm pressure switch, accumulator tank, solenoid valve and transient rod, in that order. The alarm pressure switch provides an input to DCC-X, and a "Tran Rod Air Supply Press Low" message is indicated if air pressure drops to ~60 psig.

9.7.2 Evaporator - Liquid Radioactive Waste Treatment

The facility does not routinely generate or discharge liquid waste. Small amounts of pool water which has tritium above drinking water standards is either evaporated (in an open tank) or transferred to the PA broad scope radioactive material license for disposal. On occasion, reactor pool water that remains in the 48,000 gallon (1.8×10^5 ℓ) hold-up tank following pool water transfers is pumped to the evaporator building 4000 gallon (1.5×10^4 ℓ) floor tank.

If significant liquid radioactive waste were produced it could be sent to either the 2000 gallon (7.6×10^3 ℓ) underground waste hold-up tank near the evaporator building or the 4000 gallon (1.5×10^4 ℓ) waste hold-up tank in the floor of the evaporator building. Liquid waste from either of these two waste hold-up tanks can be processed by a vendor for disposal or slowly evaporated. Waste residue from the evaporation process would be disposed of as solid waste.

9.7.3 Reactor Bay Overhead Crane

The reactor bay is equipped with a 3 ton (2722 kg) overhead crane supported by the building structure. The major function of the crane is to move experiments or experimental facilities or parts thereof such as the FFT and FNI shield plugs (see Section 10.2.4). It is also used to position the pool divider gate (see Section 4.3).

9.8 Bibliography

1. Letter of March 1, 1966 from Fabian C. Foushee of General Atomics/General Dynamics, subject: "Storage of TRIGA Fuel Elements."

2. GA Document GA-5402, "Criticality Safeguards Guide."

3. Interoffice Correspondence from Dan Hughes to Marc Voth, November 1, 1994, "GA Fuel Storage Racks."