NEUTRON PRODUCTS INC
22301 Mt. Ephraim Road, P. O. Box 68
Dickerson, Maryland 20842 USA
301-349-5001 FAX: 301-349-2433
e-mail: neutronprod@erols.com

5 April 2019

Document Control Desk
Director
Division of Spent Fuel Management
Office of Nuclear Material Safety and Safeguards
US Nuclear Regulatory Commission
Washington, D.C. 20555-0001

Mr. Chris Allen
Project Manager
Spent Fuel Licensing Branch
Division of Spent Fuel Management
Office of Nuclear Material Safety and Safeguards

Re: Response to Second RAI
Docket No. 71-9215
EPID No. L-2017-LLA-0133

Dear Mr. Allen,

I am replying to your Request for Additional Information dated January 30, 2019, which we received on March 15, 2019, and which we discussed on January 29, 2019.

Your request states:

"5.1 Provide additional information regarding the methodology and criteria used to determine whether source material is suitable to be loaded.

Staff analysis shows that a pencil source with the maximum activity limits in the CoC Condition 5(b) will not meet the dose rate requirements of Title 10 of the Code of Federal Regulations (10 CFR) 71.47(a). Although the applicant confirmed this in an RAI response (ADAMS Accession No. ML18218A429), the applicant did not provide separate analysis or measurements showing that a package which does not meet 71.47(a) will meet the requirements of 71.47(b). Therefore, the applicant needs to provide the criteria or the process

NMSS20

by which the maximum activity that can be transported in a pencil source configuration is determined.

This information is necessary to determine compliance with 10 CFR 71.47."

Shielding Evaluation

In order to evaluate whether or not we can ship a particular source, we compare it to similar sources previously shipped in our package. If it is within the bounds of what has been previously shipped successfully, we generally do not perform additional shielding analysis. If, however, it is outside the bounds of what has been previously shipped, we perform additional analysis as shown in the following example.

Hypothetically, let us consider a 9400 Ci cobalt-60 source, 7" long and 0.75" in diameter. A sketch of the hypothetical source within the shipping cask is shown in the attached Figures 1.a through 1.g. For demonstration purposes for this response, we have calculated the dose rates at contact with the cask at various points. In actual practice, for a pencil source such as this, we know from past experience that the highest contact dose rate with the cask surface will be the area around the steel flange to which the end plate is bolted, so that is where our focus would be.

The cask does not constitute the outside surface of the package, so these calculations do not serve to directly satisfy the requirements of 10 CFR 71.47. However, they are useful in ultimately calculating package contact dose rates and the transport index. In addition, our personnel handle the cask when preparing it for shipment, and the dose rate calculations for the cask are very useful from the standpoint of controlling occupational exposure.

In order to minimize both dose rate and occupational exposure, it is beneficial when shipping a source such as this to keep it as close to the center of the cask as possible, which is why the sketch shows the source axially centered and radially offset toward the middle of the cask.

Microshield analysis is one technique we use to evaluate dose rates from a proposed loading. Another method which we have found effective is to treat the pencil source as a series of point sources. We will demonstrate this technique in this example.

The activity in this source is uniformly distributed, so, for the purposes of our calculations, we will consider eight point sources of 1175 Ci each. We will put the first source on the very tip of the source closest to the side of the cask where we will be performing this analysis, with each subsequent source placed at intervals of 1/8th of the overall source length. By doing so, we slightly shift the activity toward the side of our calculations which may result in our calculated dose rates being slightly elevated.

As shown in the attached sketches, for this configuration, the highest dose rate is expected to be found at the top of the bolt flange for the end caps. As a result, we will focus on Figure 1.e.

Taking measurements from the sketch shows that the overall distance from the tip of the source (where we have located our first 1175 Ci point source) to the top of the flange is approximately 9". Of that, approximately 3.25" is tungsten alloy, 3" is lead and 2.75" is steel.

The unattenuated dose rate would be:

$I_o = 5.2 \times 10^6$ (1175 Ci)(2.5 MeV/disintegration for Co-60) / (9 in x 2.54 cm/in)^2 mR/hr. This works out to approximately 29,200 R/hr. The same result can be achieved by using the dose rate for cobalt-60 of 1.3 R/hr at 1m per curie of activity.

(1175 Ci) (1.3 R/hr) = 1530 R/hr. Using the inverse square law, we get approximately 29,300 R/hr at 9".

Shielded dose rates can be calculated using the linear attenuation shielding formula:

$I = (I_o) \times (e^{-\mu x}) \times (B)$, where:

I is the shielded dose rate;

I_o is the unattenuated dose rate;

μ is the linear attenuation coefficient for the shielding material;

x is the thickness of the shielding material; and,

B is the build-up factor for the thickness of the shielding material.

Although we can perform, and have performed, these calculations using published tables for attenuation coefficients, interpolating data to determine build-up factors, etc., as a practical matter, there are some very good programs and websites to perform these calculations. The aforementioned Microshield is one of them, as is radprocalculator, which we will use for these calculations.

Using that site shows that 3.25" of tungsten will reduce the dose rate from 29,200 R/hr to 17 R/hr. This is a reduction factor of 17/29,200, or 0.00058. One slight adjustment is made due to the fact that we use tungsten alloy, which has a specific gravity of 17, compared to 19 for tungsten. To account for this, we multiply the reduction factor by (19/17) to get 0.00065.

Using a rule of thumb to check this calculation, we know that the tenth thickness for tungsten when shielding cobalt-60 is approximately 0.9". Thus, 3.25" of tungsten constitutes a little more than three tenth thicknesses and should, therefore, reduce the dose rate by more than a factor of 1000, which is what we see with a reduction factor of 0.00065.

The 3" of lead reduces the dose rate from 29,200 R/hr to 490 R/hr, for a reduction factor of 0.017, while the 2.75" of steel reduces the dose rate to 5200 R/hr, for a reduction factor of 0.18.

I = (29,200 R/hr) x 0.00065 x 0.017 x 0.18 = 58 mR/hr.

So, the first hypothetical 1175 Ci point source contributes 58 mR/hr to the contact dose rate at the top of the flange.

The same process is used for the next few 1175 Ci point sources, with each source being spaced approximately 0.875" apart. As we move back in the source, we also have to account for self attenuation, or the amount of shielding provided by the source itself. For the purposes of these calculations, we assume the cobalt metal has similar shielding properties to those of steel or iron. Using the process described above, the second source (at a measured distance of approximately 9.75" from the top of the flange) results in a dose rate at the flange of 36 mR/hr. The third gives 7 mR/hr and the fourth gives 4 mR/hr. Calculations were stopped at this point, with the total being approximately 110 mR/hr.

To estimate the contact dose at the surface of the package itself, we will use the inverse square law. The center of the source is approximately 12" from the outside of the cask, and approximately 24" from the outside of the overpack:

110 mR/hr (12^2 / 24^2) = 27.5 mR/hr, or approximately 30 mR/hr.

To estimate the TI, we will also use the inverse square law:

110 mR/hr (12^2 / 63.4^2) = 4

Your question asked for information on the process we use to determine the maximum activity we can ship for a given source geometry and configuration. As you can see from the example above, we use the process a little differently, in that we are generally trying to determine whether or not we can ship a particular source, which in this case was a 9400 Ci cobalt-60 source, 7" in length and 0.75" in diameter. Based upon the calculations above, I see no reason why our package could not be used to ship such a source. The process could also be extended to answer your question regarding activity limits for pencil sources. Both the contact dose rate and the anticipated TI are approximately half the 71.47(a) limits. Accordingly, it could be argued that a source in the same configuration containing the maximum package activity of 15,000 Ci would give survey results approximately 50% higher than those calculated above and could, therefore, still be shipped in compliance with the 71.47(a) limits.

However, using the same methods described above shows that a 10,000 Ci source which is 10" long (instead of 7") and 0.75" in diameter would have a contact dose rate with the cask of approximately 850 mR/hr, which would drive the contact dose rate with the package up to the 200 mR/hr range and would push the TI over 10. Because the areas of highest dose rate are around the end caps, and not at the sides of the cask, the package could be oriented such that it would meet the 71.47(b)(1)(3) requirement that the dose rate not exceed 10 mR/hr at a

distance of 2m from the edge of the truck. As such, this could still be shipped exclusive use in accordance with 71.47(b).

If the source length is extended to 12", the contact dose rate for a 0.75" diameter source would approach and likely exceed the 1 R/hr limit in 71.47(b) in which case the source could not be shipped in our package, even under the terms of exclusive use.

Discussion of Process and Procedures

Our procedure R-2014-G, Unloading and Loading Procedure for USA/9215/B(U) Package – Radioactive Materials Transportation is tied to the Certificate of Compliance. It currently does not speak to job preparations. To attempt to address the concerns you have raised, we propose adding the following language:

Job Preparation

> *The Transfer Cask Layout Form shall be completed by a qualified individual who is knowledgeable of the job to be performed.*
>
> *An independent review of the Transfer Cask Layout Form or equivalent shall be completed to ensure compliance with the C of C, C of CA, 10 CFR Part 71 requirements and applicable DOT regulations. The review shall include, but not be limited to, the following:*
>
> > *Dimensions. Shield plugs must be configured in order to restrict movement of the source to 0.25" in any direction. Shield plugs must meet minimum dimensional requirements specified in the certificate;*
> >
> > *Materials of construction of shield plugs, sleeves and spacers;*
> >
> > *Shielding evaluation, which will be based on a review of the following:*
> >
> > > *A comparison of the proposed shipment with prior shipments;*
> > >
> > > *The isotope and activity of the source;*
> > >
> > > *Dimensions of the source;*
> > >
> > > *Location of the source in the TC;*
> > >
> > > *Shield plugs to be used;*
> > >
> > > *Performance of a shielding analysis if the proposed shipment is outside of the bounds of what has previously been shipped in order to ensure that the shipment will be in compliance with 10 CFR 71.47.*
> >
> > *Records documenting the review shall be maintained.*

I would be happy to discuss this proposed language and to submit a modified procedure for approval if doing so would address the concerns you have raised.

Miscellaneous

In previous correspondence, it was our understanding that the language in the certificate referring to "tungsten" would be changed to "tungsten and/or tungsten alloy" to reflect the material which we have always used. To the extent the certificate is modified, we would greatly appreciate it if this change could also be made.

Additional Considerations

As we have discussed, the package has been used to ship a wide range of sources, both in commerce and in the removal of sources under the OSRP and IAEA programs. Some of these sources are standard, but many of them are not. We greatly appreciate the operational flexibility we have been afforded to date and believe that an approach can be devised which will enable you to satisfy your regulatory responsibilities and will at the same time allow us to maintain the operational flexibility we require.

I believe this letter to be responsive both to your Request for Additional Information and to the conference call of January 29. If I am mistaken in that belief, or if you require additional information, please let me know.

Thank you for your consideration.

Sincerely,

Bill Ransohoff
Neutron Products, Inc.
President

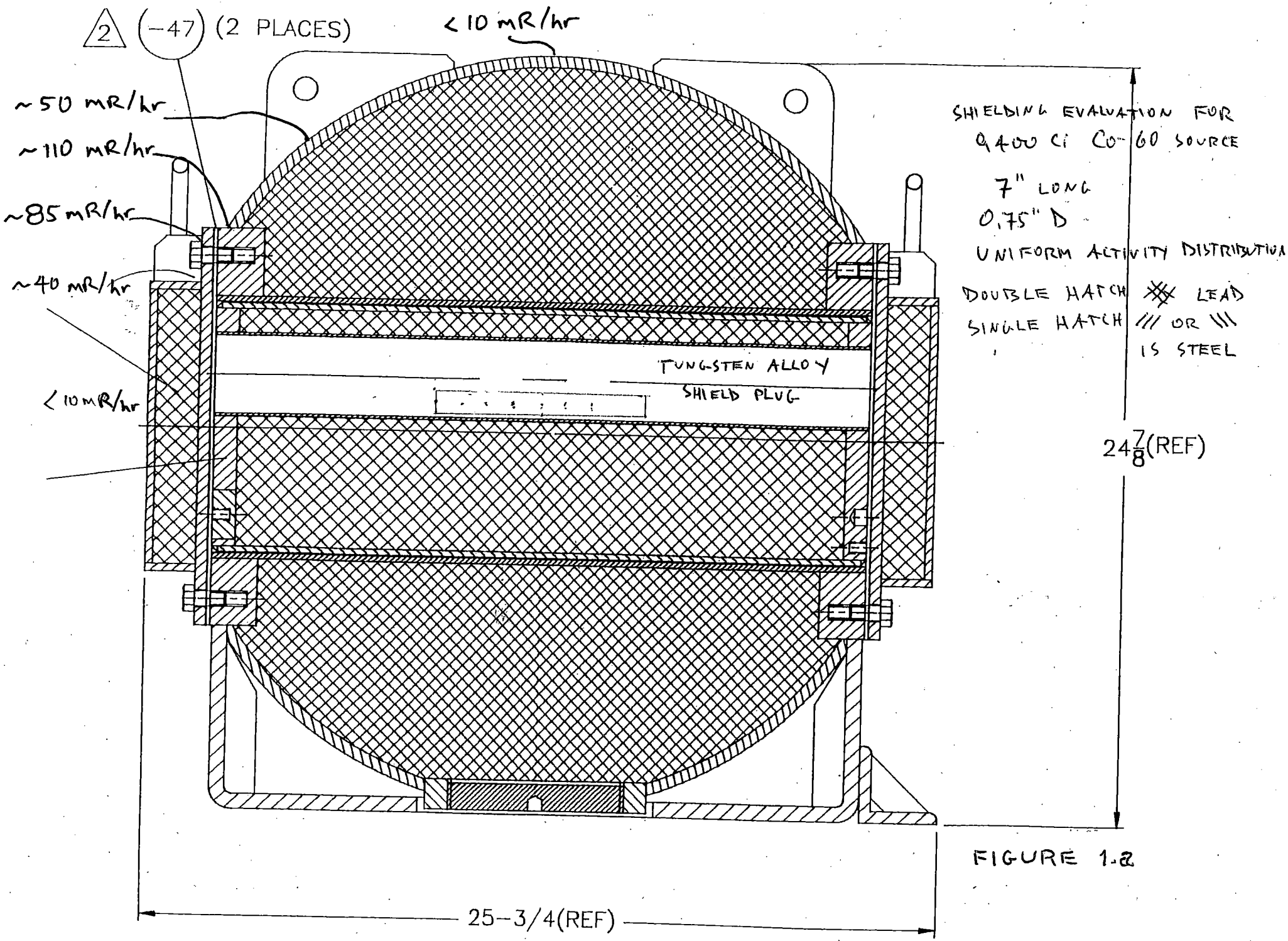

FIGURE 1.2

SECTION D-D

-1 CASK A

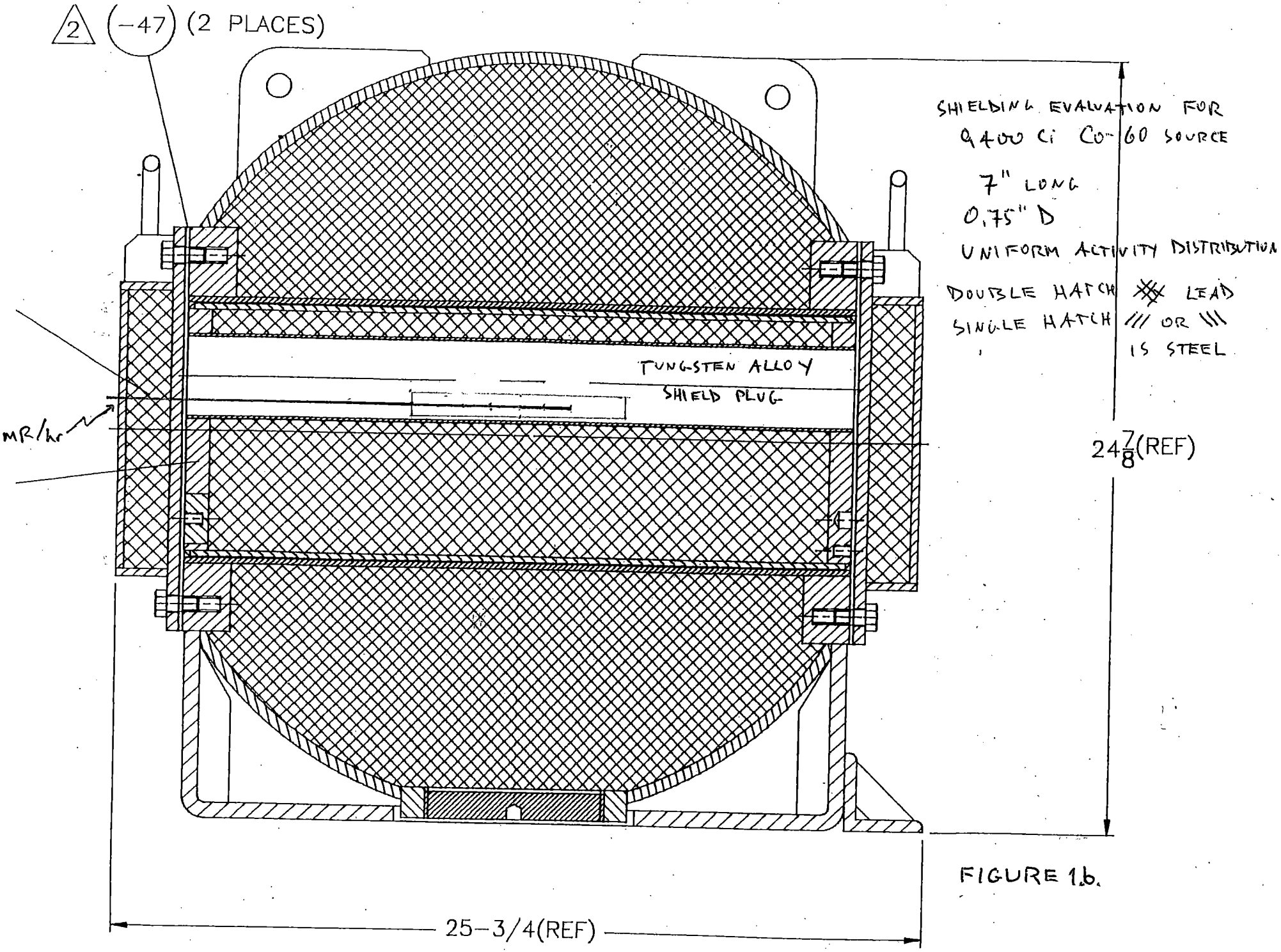

FIGURE 1.b.

SECTION D-D

-1 CASK A

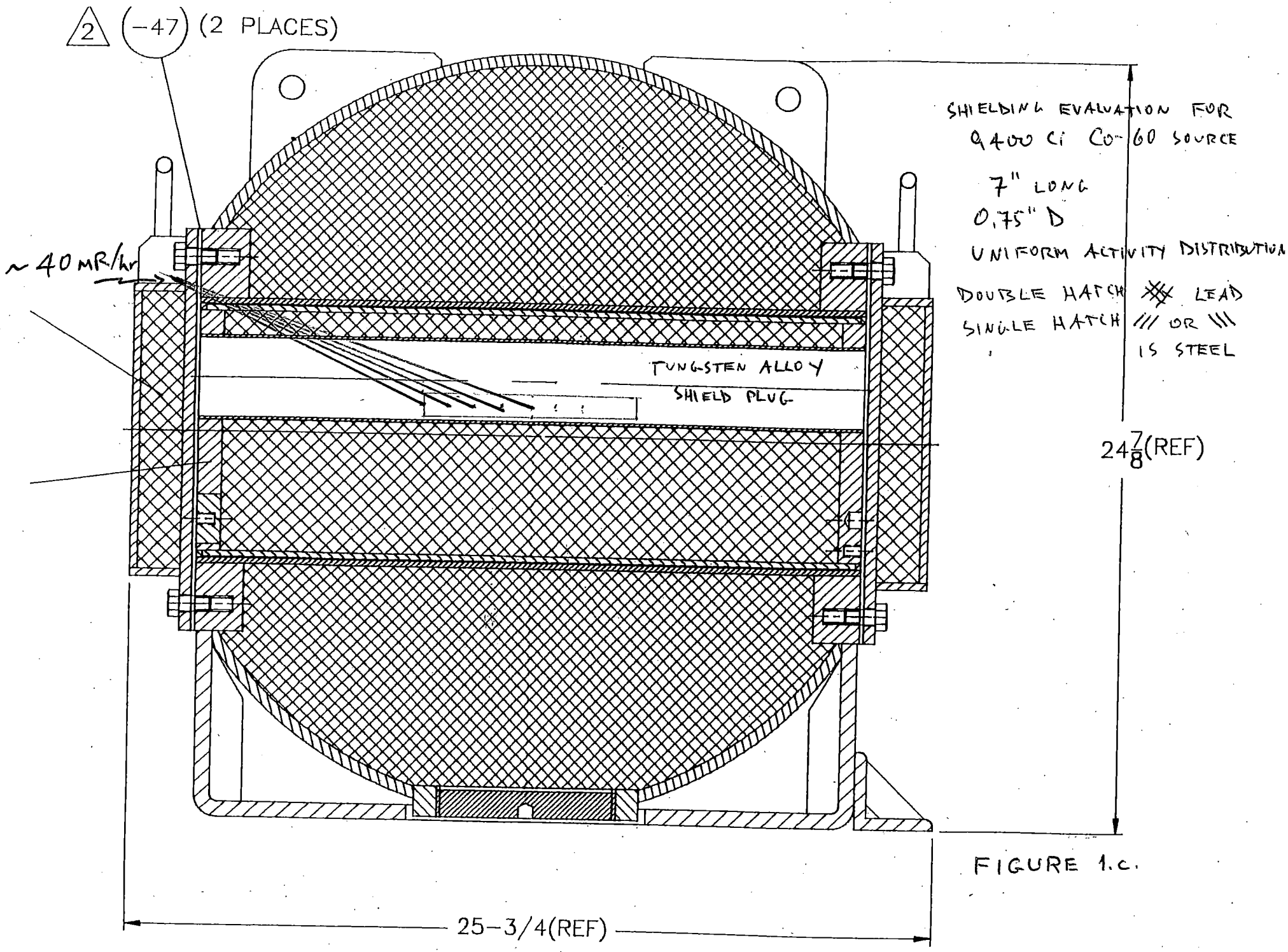

FIGURE 1.c.

SECTION D-D

-1 CASK A

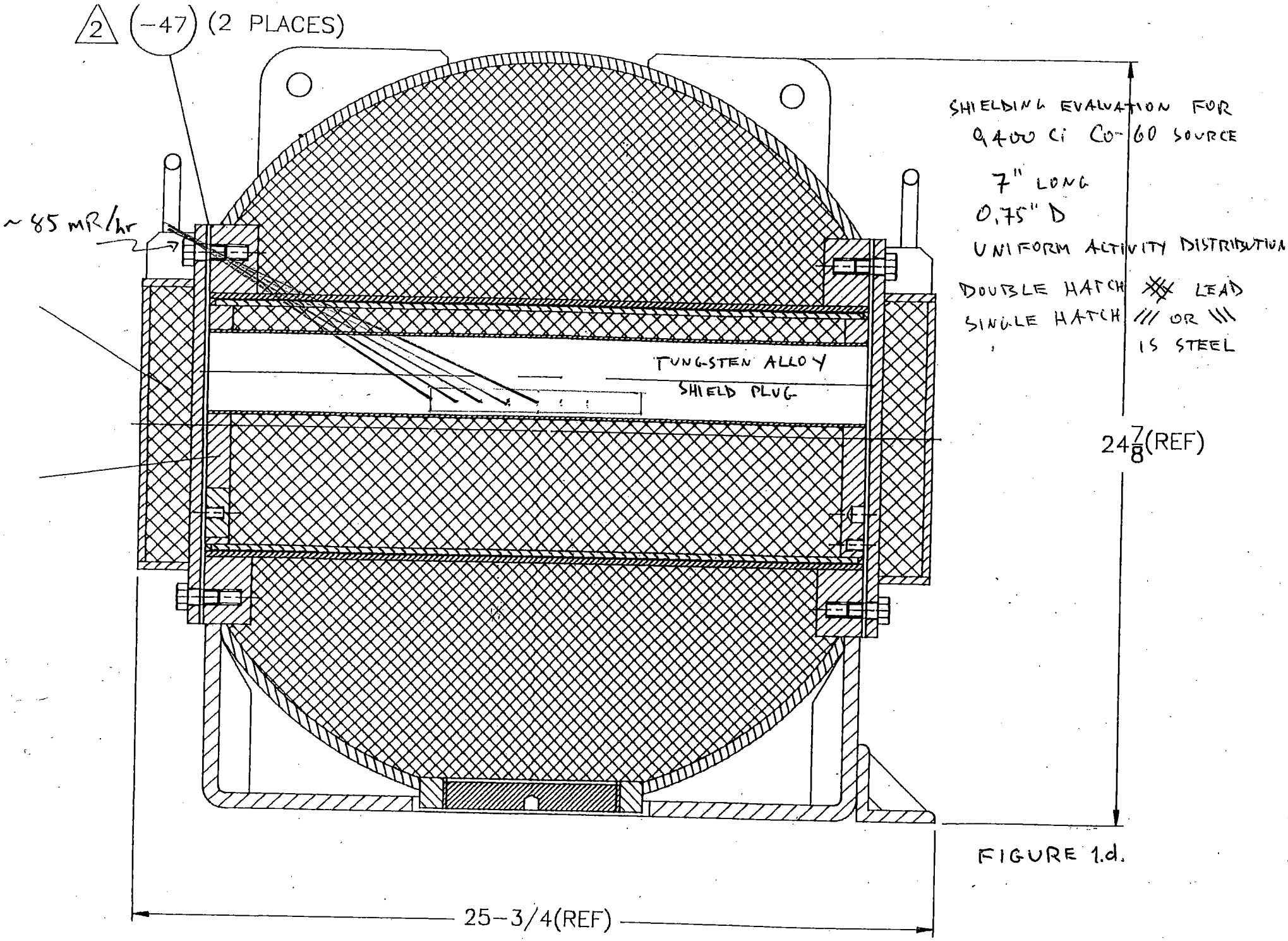

FIGURE 1.d.

SECTION D-D

-1 CASK A

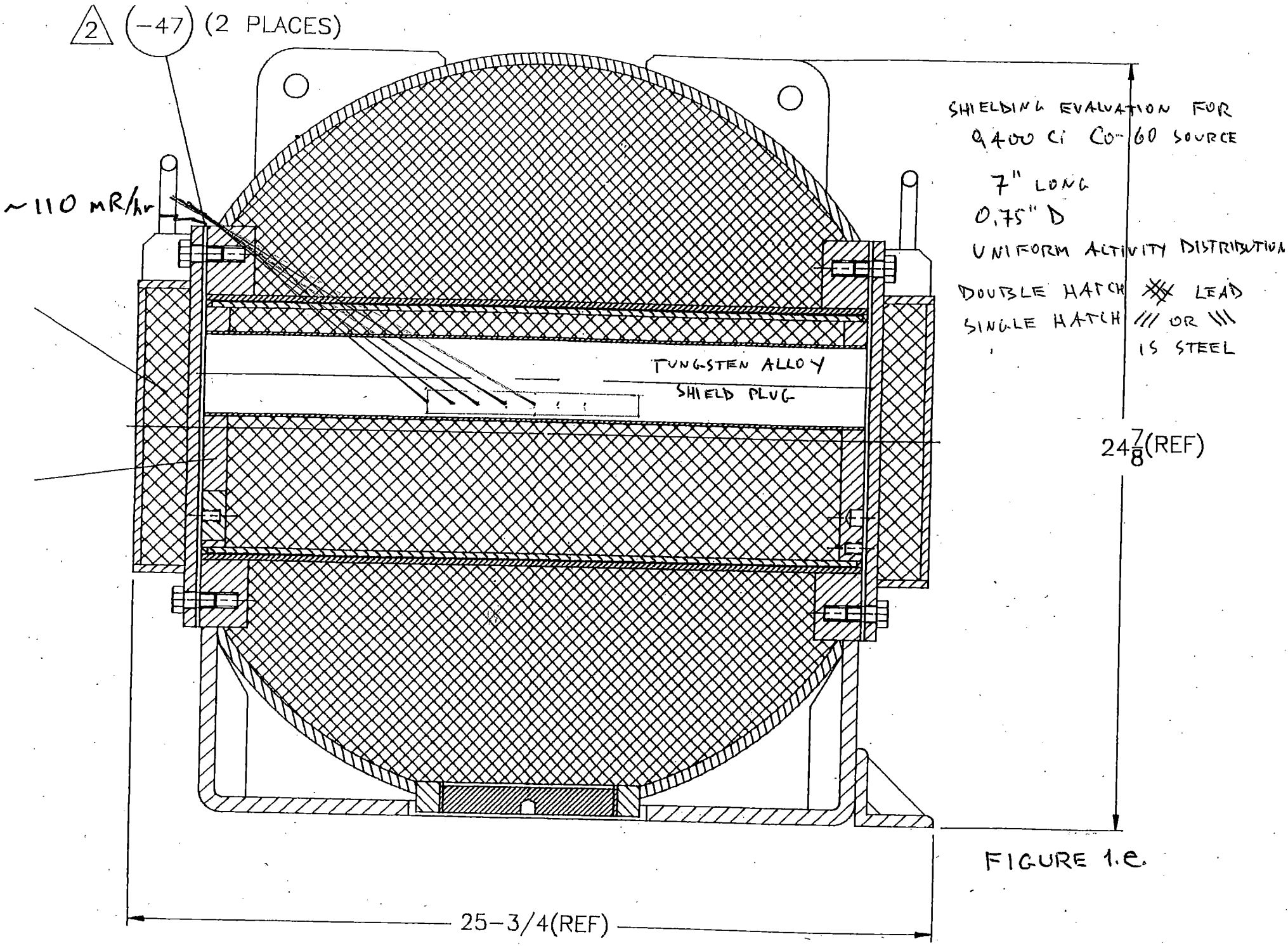

FIGURE 1.e.

SECTION D-D

-1 CASK A

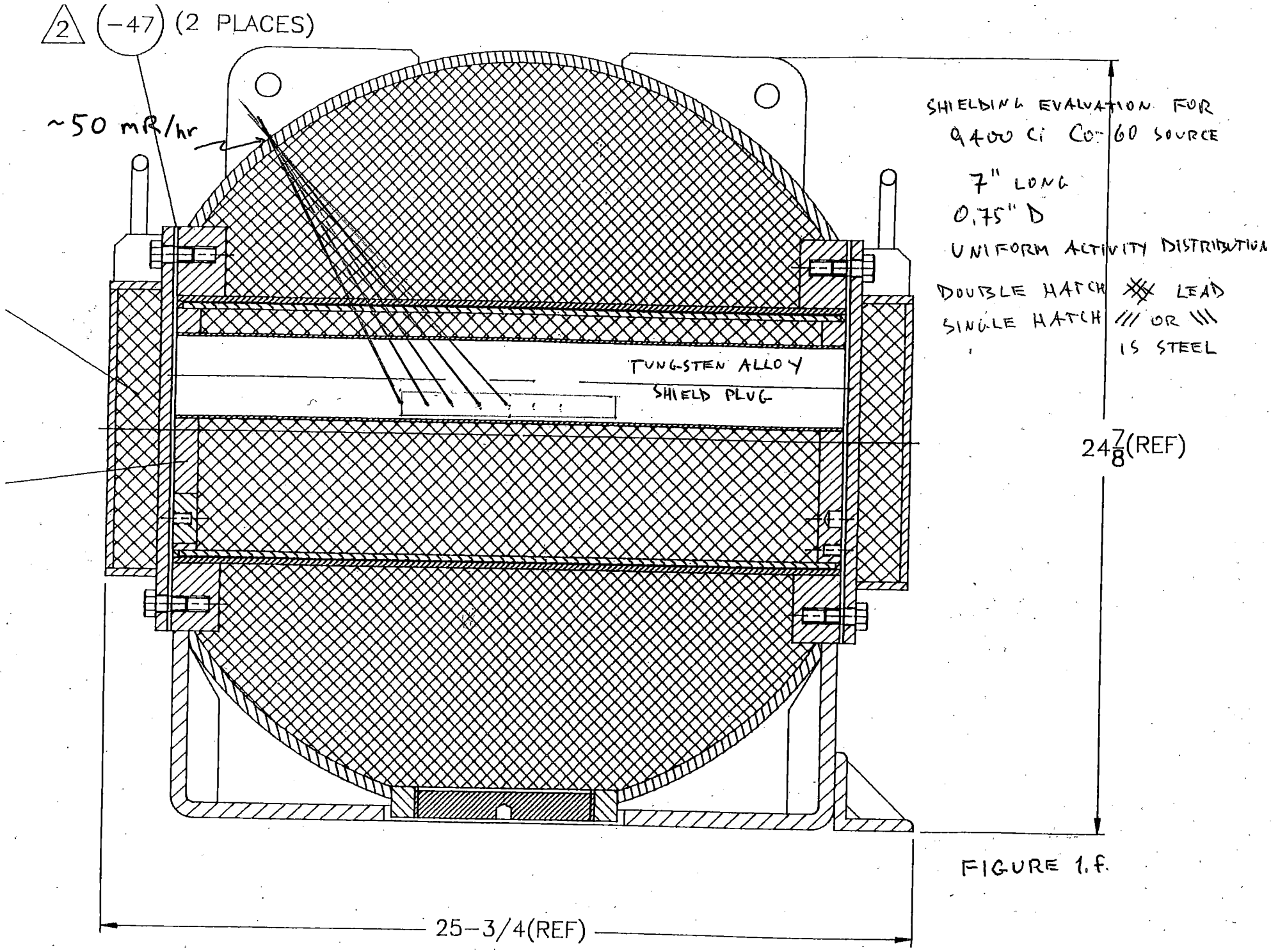

FIGURE 1.f.

SECTION D-D

-1 CASK A:

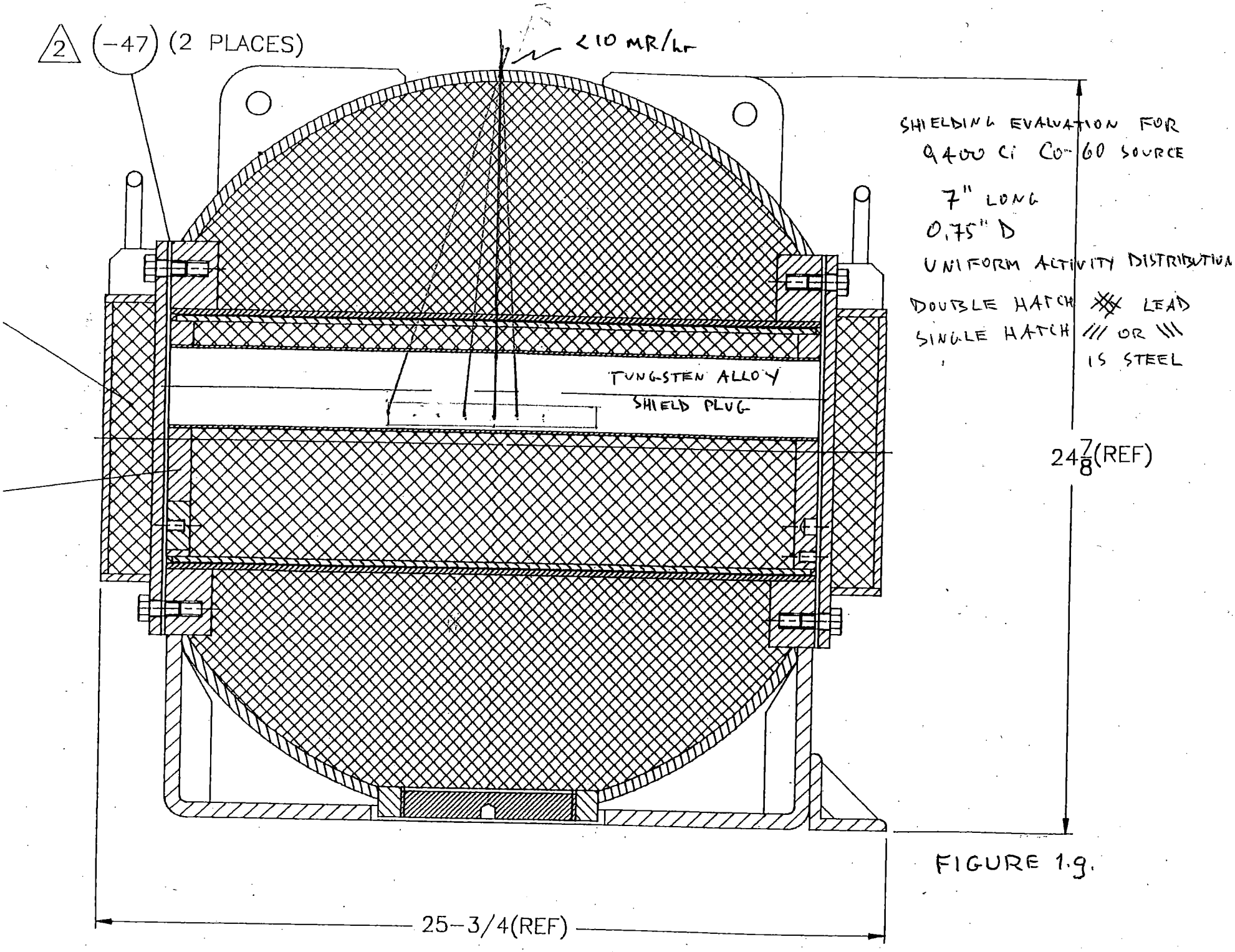

FIGURE 1.9.

SECTION D-D

-1 CASK A: