Official Transcript of Proceedings

NUCLEAR REGULATORY COMMISSION

Title: Advisory Committee on Reactor Safeguards
NuScale Subcommittee

Docket Number: (n/a)

Location: Rockville, Maryland

Date: Wednesday, April 17, 2019

Work Order No.: NRC-0297 Pages 1-516

NEAL R. GROSS AND CO., INC.
Court Reporters and Transcribers
1323 Rhode Island Avenue, N.W.
Washington, D.C. 20005
(202) 234-4433

1
2
3
4 DISCLAIMER
5
6
7 UNITED STATES NUCLEAR REGULATORY COMMISSION'S
8 ADVISORY COMMITTEE ON REACTOR SAFEGUARDS
9
10
11 The contents of this transcript of the
12 proceeding of the United States Nuclear Regulatory
13 Commission Advisory Committee on Reactor Safeguards,
14 as reported herein, is a record of the discussions
15 recorded at the meeting.
16
17 This transcript has not been reviewed,
18 corrected, and edited, and it may contain
19 inaccuracies.
20
21
22
23

UNITED STATES OF AMERICA

NUCLEAR REGULATORY COMMISSION

+ + + + +

ADVISORY COMMITTEE ON REACTOR SAFEGUARDS

(ACRS)

+ + + + +

NUSCALE SUBCOMMITTEE

+ + + + +

WEDNESDAY

APRIL 17, 2019

+ + + + +

ROCKVILLE, MARYLAND

+ + + + +

The Subcommittee met at the Nuclear Regulatory Commission, Two White Flint North, Room T2D10, 11545 Rockville Pike, at 8:35 a.m., Ron Ballinger and Walter Kirchner, Co-Chairs, presiding.

1 COMMITTEE MEMBERS:
2 RONALD G. BALLINGER, Co-Chair
3 WALTER L. KIRCHNER, Co-Chair
4 CHARLES H. BROWN, JR. Member
5 DENNIS BLEY, Member
6 MICHAEL L. CORRADINI, Member
7 JOSE MARCH-LEUBA, Member
8 JOY L. REMPE, Member
9 PETER RICCARDELLA, Member
10 GORDON R. SKILLMAN, Member
11 MATTHEW W. SUNSERI, Member
12 ACRS CONSULTANT:
13 STEPHEN SCHULTZ
14 DESIGNATED FEDERAL OFFICIAL:
15 MICHAEL SNODDERLY
16 ALSO PRESENT:
17 BRUCE BAVOL, NRO
18 JOHN BUDZYNSKI, NRO
19 ALLYSON CALLAWAY, NuScale
20 STEPHEN CUMBLIDGE, NRR
21 TIM DRZEWIECKI, NRO
22 JOHN FIELDS, NuScale
23 CARRIE FOSAAEN, NuScale
24 KEN GEELHOOD, PNNL
25 NICHOLAS HANSING, NRO

1 ALSO PRESENT (CONTINUED):
2 JOHN HONCHARIK, NRO
3 CHANG LI, NRO
4 LARRY LINIK, NuScale
5 TIMOTHY LUPOLD, NRO
6 GREG MAKAR, NRO
7 DEREK NOEL, NuScale
8 RYAN NOLAN, NRO
9 ELIZABETH PLUMLEE, EMC Squared*
10 MATTHEW PRESSON, NuScale
11 ZACKARY RAD, NuScale
12 KEN ROOKS, NuScale
13 JEFFREY SCHMIDT, NRO
14 COLIN SEXTON, NuScale
15 ALEXANDRA SIWY, NRO
16 BOYCE TRAVIS, NRO
17 CHRIS VAN WERT, NRO
18 ANDREA VEIL, ACRS
19 DAN WIDREVITZ, NRO
20 GERY WILKOWSKI, EMC Squared*
21 HONGQING XU, NuScale
22 ANDREW YESHNIK, NRO
23
24 *Present via telephone
25

CONTENTS

Overview of Chapter 4, Reactor, NuScale Design Certification Application 5
Overview of Chapter 4, Reactor Safety Valuation with Open Item 104
Chapter 5, Reactor Coolant System, NuScale Design Certification Application 158
Chapter 5, Reactor Coolant System, Safety Evaluation with Open Items 284
Public Comment 357
Closing Comments 357
Adjourn 366

P R O C E E D I N G S

8:35 a.m.

CO-CHAIR BALLINGER: The meeting will now come to reorder.

This is a meeting of the Advisory Committee on Reactor Safeguards, NuScale Subcommittee. I'm Ron Ballinger, Co-Chairman for today's Subcommittee meeting, along with Walt Kirchner, who will chair this afternoon's session, and Mike Corradini.

Members in attendance today are Jose -- what?

MEMBER MARCH-LEUBA: Are the microphones working?

CO-CHAIR BALLINGER: Yes, they are.

Members in attendance today are Jose March-Leuba, Walt Kirchner, Dennis Bley, Joy Rempe, Mike Corradini, myself, Matt Sunseri, Gordon Skillman, Pete Riccardella, Charlie Brown, and our esteemed consultant, Stephen Schultz. Mike Snodderly is the Designated Federal Official for this meeting.

The Subcommittee will review the staff's evaluation of Chapter 4, Reactor, and Chapter 5, Reactor Coolant System and Connecting Systems, of the NuScale Design Certification Application. Today, we

have members of the NRC staff and NuScale to brief the Subcommittee.

The ACRS was established by statute and is governed by the Federal Advisory Committee Act, or FACA. That means that the Committee can only speak through its published letter reports. We hold meetings to gather information to support our deliberations.

Interested parties who wish to provide comments can contact our office requesting time after the meeting announcement is published in The Federal Register. That said, we set aside 10 minutes for comments from members of the public attending or listening to our meetings. Written comments are also welcome.

The ACRS section of U.S. NRC public website provides our Charter, Bylaws, letter reports, and full transcripts of all full Committee and Subcommittee meetings, including slides presented there.

The rules for participation in today's meeting were announced in The Federal Register on April 5th, 2019. The meeting was announced as an open/closed meeting. We may close the meeting after the open portion to discuss proprietary material, and

1 presenters can defer questions that should not be
2 answered in the public session at that time. And I
3 would caution, if we ask questions that you think are
4 needed to be discussed in private, please let us know.
5 No written statement or request for making
6 an oral statement to the Subcommittee has been
7 received from the public concerning this meeting.
8 A transcript of the meeting is being kept
9 and will be made available as stated in The Federal
10 Register notice. Therefore, we request that
11 participants at this meeting use the microphones
12 located throughout the meeting room when addressing
13 the Subcommittee. That means the little green light
14 that's on your microphone needs to be on when you're
15 talking. Participants should first identify
16 themselves and speak with sufficient clarity and
17 volume, so that they can be readily heard.
18 We have a bridge line established for the
19 public to listen to the meeting. To minimize
20 disturbance, the public line will be kept in the
21 listen-only mode. To avoid disturbance, we request
22 that attendees put their electronic devices like cell
23 phones in the off or noise-free mode.
24 We will now proceed with the meeting, and
25 I will call upon, I guess it's Matthew Presson --

1 MR. PRESSON: Correct.

2 CO-CHAIR BALLINGER: -- to begin today's

3 presentations.

4 MR. PRESSON: Thank you.

5 CO-CHAIR BALLINGER: The floor is yours.

6 MR. PRESSON: Thank you.

7 And good morning, everyone.

8 My name is Matthew Presson. I am the

9 Licensing Project Manager for NuScale for Chapter 4 of

10 our Power Module Design Certification Projects.

11 Our objective here today is to provide a

12 presentation of the material of the NuScale FSAR

13 Chapter 4, and our focus will be on those features or

14 analytical methods or modes of operation which may be

15 unique to NuScale.

16 For the presentation team, we have myself.

17 And I'll have the rest introduce themselves.

18 MS. CALLAWAY: My name is Allyson

19 Callaway. I'm the Supervisor of Nuclear Analysis with

20 NuScale.

21 MR. ROOKS: Ken Rooks. I'm a Core T-H

22 Engineer in the fuels organization.

23 MR. LINIK: I'm Larry Linik. I'm a Fuels

24 Engineer.

25 CO-CHAIR BALLINGER: Could you guys put

your microphones a little bit closer to where you are? Three out of the four sounded really light, except for Larry. Thank you.

MEMBER BLEY: And as Ron said, the green light is on when you talk, but turn it off when you're not talking because we have noise problems with it.

MR. PRESSON: All right. So, this is a quick title slide, just providing a brief summary of the sections in Chapter 4.

And with that, we'll begin with a discussion on 4.1, led by Larry.

MR. LINIK: So, a brief overview of the reactor, 160-megawatt, integral natural circulation reactor. Core composed of 37 NuFuelHTP2 fuel assemblies. We have 16 hybrid silver-indium-cadmium/boron carbide control rods.

The table is provided for basic reference, should you need it, as to the basic parameters of our design.

MEMBER CORRADINI: So, I have a question that can be deferred when the right time is there. I want to understand how you estimate the bypass flow. So, whenever that's appropriate, I'd like to know. And I want to know, is it a best estimate or a conservative estimate? I need to understand that

1 because I couldn't from the written materials. So,
2 whenever it's appropriate.
3 MEMBER MARCH-LEUBA: Is this Chapter 5 or
4 Chapter 4 question?
5 MEMBER CORRADINI: Whenever it's
6 appropriate.
7 MR. LINIK: Yes.
8 MEMBER SKILLMAN: Larry, you've got 16
9 rods?
10 MR. LINIK: Yes.
11 MEMBER SKILLMAN: Three different lengths.
12 Explain the configuration for the three different
13 lengths of rods.
14 MR. LINIK: Oh, you're talking about the
15 CRA? The rod lengths, it's based on the location and
16 the support members coming from the hub to support
17 each individual rod length. And so, it requires three
18 different length rods. They all terminate at the same
19 end point.
20 MEMBER SKILLMAN: All 16 are identical?
21 MR. LINIK: Yes.
22 MEMBER SKILLMAN: Thank you.
23 MR. LINIK: That is correct.
24 MEMBER SKILLMAN: Okay.
25 MEMBER CORRADINI: And since he asked the

1 question, again, if this is the wrong place, you tell
2 us where to answer it. So, when you go into scram,
3 are the scram rods going in as well as the control
4 bank rods or just the scram rods?
5 MR. LINIK: All of the rods go in on --
6 MEMBER CORRADINI: Both banks?
7 MR. LINIK: That is correct.
8 MEMBER CORRADINI: Okay.
9 MEMBER SKILLMAN: I'd like to roger up the
10 comment that Jose made. I've got mechanical comments
11 and analytical comments, but it seems most of the
12 mechanical comments are more appropriate on 5 versus
13 4, just the way this is rolling out. Is that kind of
14 your path forward, more analytical in 4, mechanical
15 and design on 5?
16 MR. LINIK: As far as the fuel assembly
17 and CRA are concerned, I would imagine the mechanical
18 also resides with 4.
19 MEMBER SKILLMAN: Okay. Thank you. Okay.
20 Good.
21 MR. LINIK: The interaction with the rest
22 of the internals would be probably 5.
23 MEMBER SKILLMAN: Thank you.
24 MR. LINIK: So, our description of our
25 fuel assembly. It's standard 17x17 Framatome

1 technology. It's backed by over 1500 fuel assemblies
2 with a lead burn-up of 54 gigawatt days per metric
3 ton. All of the components are existing Framatome
4 technology currently used or used in the past.
5 We have HTP high thermal performance
6 spacer grids. We have four of those. We have the
7 HMP, high mechanical performance, spacer grid at the
8 bottom. The coarse mesh filter plate for debris
9 resistance. Zircaloy-4 MONOBLOC guide tubes. All of
10 the standard technology you would see in a typical
11 Framatome 17x17 assembly.
12 CO-CHAIR BALLINGER: I have a question.
13 MR. LINIK: Yes, sir?
14 CO-CHAIR BALLINGER: And this also may be,
15 again, straying into proprietary information. But the
16 debris filter, because it's a natural circulation
17 system --
18 MR. LINIK: Yes.
19 CO-CHAIR BALLINGER: -- the flow velocity
20 is much lower?
21 MR. LINIK: That's correct.
22 CO-CHAIR BALLINGER: Have you guys done
23 the kind of analysis that would say this debris filter
24 will work with this kind of flow system?
25 MR. LINIK: Back in 2013-14, we did -- it

1 was a non-QA test with the previous fuel vendor that
2 we were allied with, where we took a standard package
3 of debris, put it into the test loop, and ran it at
4 higher-than-normal flow rate. And there was no
5 indication of any lift of the standard particle
6 packages into the internals of the fuel assembly.
7 That was a different fuel design, but, given the low
8 flow rate, there is very low propensity to loft
9 particles into the fuel assembly.
10 CO-CHAIR BALLINGER: Okay, but what you're
11 saying is you don't have actual tests for this
12 particular --
13 MR. LINIK: No. But we don't expect any
14 lift off of --
15 MEMBER CORRADINI: But you don't have,
16 also, fine fibers in the --
17 MR. LINIK: That is correct.
18 MEMBER CORRADINI: Okay.
19 MEMBER SKILLMAN: Another question on 4.2.
20 You've got a guide tube cap screw at the bottom of the
21 fuel assembly. What assures that cap screw does not
22 become a loose part?
23 MR. LINIK: The cap screw, once it's
24 screwed in, is essentially crimped in multiple places
25 to ensure engagement between the cap screw and the

1 surrounding material.

2 MEMBER SKILLMAN: Crimped means a punch or

3 some other device --

4 MR. LINIK: Punch, yes. Yes, sir.

5 MEMBER SKILLMAN: -- actually drives the

6 cap screw out of periphery into the base metal?

7 MR. LINIK: Into the -- yes, the

8 surrounding material.

9 MEMBER SKILLMAN: Is that considered a

10 certain mechanical lock?

11 MR. LINIK: I don't know about the

12 terminology, but it is not expected to --

13 MEMBER SKILLMAN: I'm thinking of baffle

14 bolts, which --

15 MR. LINIK: Right.

16 MEMBER SKILLMAN: -- used to be about the

17 same, and now they're weld struck.

18 MR. LINIK: Okay. I'm unfamiliar with the

19 baffle bolt problem, but the technology used for

20 restraining those bolts is used in the current fleet,

21 and they don't have any OE or issues associated with

22 that.

23 MEMBER SKILLMAN: So far, so good for 1500

24 assemblies?

25 MR. LINIK: Yes, sir.

MEMBER SKILLMAN: Okay. Thank you. All right.

MR. SCHULTZ: Larry, you mentioned the industry experience with this fuel assembly at the longer length to a maximum burn-up of 54 gigawatt days per ton. Remind us of what your target burn-up is for end of life.

MR. LINIK: Batch average discharge should be about 36 gigawatt days per metric ton.

MR. SCHULTZ: And maximum assembly would be 40?

MR. LINIK: Probably around 40, based on --

MR. SCHULTZ: Thank you.

MR. LINIK: So, the HTP spacer design, Zircaloy-4 strip. The design, the inner straps are a doublet design, meaning two strips of material are bonded together. That allows creation of flow channels between each of the cells. Those flow channels also serve as the springs that fix the fuel rod in their location.

This design has several advantages. The spring contact area is actually eight lines of contact with the fuel rod, greatly spreading out the contact pressure over a greater area, greatly reducing the

1 propensity for grid-to-rod fretting.
2 The flow channels in the HTP design are
3 angled at the top to enhance flow mixing.
4 CO-CHAIR BALLINGER: I have a question
5 about the assembly as well. What's the natural
6 frequency for that height of a fuel rod? And is it
7 likely to be excited?
8 MR. LINIK: I don't have that off the top
9 of my head. We can get that for you later.
10 CO-CHAIR BALLINGER: Because if you get
11 spring relaxation, I'm just wondering --
12 MR. LINIK: Correct.
13 CO-CHAIR BALLINGER: -- if you're likely
14 to get that, excite that.
15 MR. LINIK: I don't have that answer off
16 the top of my head. We can get that for you.
17 We did perform a 1,000-hour wear test on
18 the assembly at higher-than-normal flow rate and saw
19 no indication of wear.
20 MR. SCHULTZ: That's higher than your
21 normal flow rate?
22 MR. LINIK: I think it was 150 percent of
23 normal.
24 CO-CHAIR BALLINGER: But was that with a
25 relaxed spring or with the --

1 MR. LINIK: Yes, that was with a simulated
2 EOL spring.
3 CO-CHAIR BALLINGER: Okay.
4 MR. SCHULTZ: Have you got the opportunity
5 to compare your testing with what Framatome has done
6 for this fuel assembly?
7 MR. LINIK: Framatome performed the
8 testing. It was at their facilities. And so, they
9 used all of their existing knowledge and test data to
10 compare to our particular design.
11 MR. SCHULTZ: And that was a comparison?
12 Or was that a mockup of your design?
13 MR. LINIK: A full-up prototype of our
14 design in the test beds.
15 MR. SCHULTZ: The test bed?
16 MR. LINIK: Yes.
17 MR. SCHULTZ: Thank you.
18 MR. LINIK: Okay. The HMP, high
19 mechanical performance, spacer design is very similar
20 to the HTP. It's made out of Alloy 718 for increased
21 rigidity. It's placed at the bottom of the fuel
22 assembly, again, to provide greater resistance for any
23 potential grid-to-rod fretting due to flow turbulence
24 at the bottom of the assembly.
25 The one minor difference is that the flow

channels are straight, not angled, to provide increased flow mixing. It's not necessary at that point. It allows for greater -- or not greater -- but at least a reduced pressure drop.

MR. SCHULTZ: Does your design have a higher turbulence at the lower portion of the assembly --

MR. LINIK: No.

MR. SCHULTZ: -- versus a typical PWR?

MR. LINIK: No, it does not.

MR. SCHULTZ: For this assembly?

MR. LINIK: This is just, you know, added conservatism.

MR. SCHULTZ: Comparisons?

MR. LINIK: Yes.

MR. SCHULTZ: Okay.

CO-CHAIR BALLINGER: This 718 is the same exact material that's used in the Framatome fuel assembly?

MR. LINIK: Correct.

MEMBER REMPE: If you're on the line, could you please mute it because we're getting background noise?

CO-CHAIR BALLINGER: I think it's feedback. I think it's feedback from him.

1 MEMBER REMPE: Okay. Thank you. Sorry to
2 interrupt.
3 MR. LINIK: No problem.
4 So, if we're done with the HMP questions?
5 The coarse mesh debris plate is proven
6 Framatome technology. It's included for increased
7 debris resistance, should there become situations
8 where there is potential for lofting material at the
9 bottom of the assembly.
10 CO-CHAIR BALLINGER: Again, the A286 is
11 what's used in the current Framatome system?
12 MR. LINIK: Correct. Correct. It's all
13 standard Framatome technology.
14 MR. SCHULTZ: Larry, how long has this
15 been in use on the PWR fleet? And you say several
16 plants?
17 MR. LINIK: Yes.
18 MR. SCHULTZ: Any idea what the reactor
19 years would be for its experience?
20 MR. LINIK: That I don't know off the top
21 of my head.
22 Glen, do you have that number?
23 Yes, we can get you that.
24 MR. SCHULTZ: I recall that it was put in
25 place at facilities that had problems with debris

1 failure.

2 MR. LINIK: Yes.

3 MR. SCHULTZ: So, it seems to be working

4 fairly well? I mean, that's the data you get from

5 Framatome? No failures --

6 MR. LINIK: Yes.

7 MR. SCHULTZ: -- in those facilities?

8 Thank you.

9 MR. LINIK: That is correct.

10 MEMBER SKILLMAN: I think we loaded these

11 in TMI 1 in the early nineties, 17x17 full length.

12 MR. SCHULTZ: But I was thinking of just

13 the debris filter. That's a fairly new design. But

14 it seems to be working quite well.

15 MR. LINIK: And this was chosen to bridge,

16 to provide debris resistance as well as provide a low

17 pressure drop.

18 So, the design basis for our fuel

19 assembly, we have submitted a Topical Report that

20 demonstrates the applicability of all the relevant

21 Framatome methodologies and Topical Reports. That's

22 previously approved. That applicability Topical

23 Report covers six of the Framatome previously NRC-

24 accepted Topical Reports that cover the range of

25 SAFDLs, as noted in the SRP sections on the table

provided.

MR. SCHULTZ: Larry, as you've gone through your evaluation, obviously, you have a shorter assembly. So, your evaluation and your analysis going forward takes that into account when you consider axial growth and rod bow evaluation?

MR. LINIK: That is correct.

MR. SCHULTZ: You have a slightly shorter length between grid spacers compared to a typical PWR assembly?

MR. LINIK: Good question. We chose the span of our spacers to be comparable to the existing fleet. And that's why we have five spacers on our design.

MR. SCHULTZ: All right. Thank you.

MR. LINIK: Each of these Topical Reports, we went through chapter by chapter, including the SER, evaluating each of those sections against our application, and we found no issues that would preclude application of these methodologies. And that's reflected in the approval of the applicability Topical Report.

MR. SCHULTZ: Is there any difference between your assembly design in terms of axial growth, in terms of the clearance at the top of the assembly,

1 between the rods and the top plate?

2 MR. LINIK: I'm trying to figure out how

3 to answer that properly. We allowed sufficient

4 shoulder height to ensure adequate room for growth for

5 the assembly as part of the design basis.

6 MR. SCHULTZ: All right. And is that

7 different than a typical full-length assembly?

8 MR. LINIK: It's going to be shorter

9 because it's a shorter-length rod.

10 MR. SCHULTZ: So, you made an adjustment

11 there?

12 MR. LINIK: Yes.

13 MR. SCHULTZ: Thank you.

14 MR. LINIK: So, the previous Topical

15 covered the six primary mechanical, thermal mechanical

16 aspects of the design.

17 The seismic methodology is separate. We

18 have a Topical Report currently under review for the

19 applicability of AREVA's new fuel seismic methodology

20 which has been accepted.

21 MEMBER MARCH-LEUBA: Will this report

22 include control over seismic also?

23 MR. LINIK: No, it does not. That would

24 be the responsibility of our --

25 MEMBER MARCH-LEUBA: It's your

1 responsibility?

2 MR. LINIK: Yes.

3 MEMBER MARCH-LEUBA: Because the control

4 rods are shortened, which is good.

5 MR. LINIK: Yes.

6 MEMBER MARCH-LEUBA: But the drive

7 mechanism is much, much longer.

8 MR. LINIK: Yes.

9 MEMBER MARCH-LEUBA: So, you get to see

10 that.

11 MR. LINIK: Yes.

12 So, again, the testing, as we mentioned

13 previously briefly. The fuel assembly has been put

14 through the full standard suite of testing that

15 Framatome provides for all of their assembly designs.

16 You know, pluck, stiffness, vibration, 1,000-hour wear

17 test. And we demonstrated acceptance with all

18 criteria.

19 MEMBER MARCH-LEUBA: Lately, we've been

20 used to, before you insert the full core somewhere,

21 you have LTAs somewhere else.

22 MR. LINIK: Uh-hum.

23 MEMBER MARCH-LEUBA: I assume we are not

24 going to have LTAs, right?

25 MR. LINIK: That is correct. There's no

1 reactor that could accept our --

2 MEMBER MARCH-LEUBA: Is there a

3 requirement? Is there a requirement to have them

4 or --

5 MR. LINIK: No, it's not a requirement.

6 It's a recommendation in the SRP.

7 MEMBER MARCH-LEUBA: Okay. So, we can

8 live without that?

9 MR. LINIK: Yes.

10 MEMBER MARCH-LEUBA: And you've thought

11 about it?

12 MR. LINIK: Part of the choice of this

13 design is to give us confidence, given our

14 environment, that we'd likely not run into any

15 surprises.

16 MEMBER MARCH-LEUBA: Okay. It looks that

17 way; it points that way, but you're assuming --

18 MR. LINIK: Yes, I agree with you 100

19 percent.

20 MEMBER MARCH-LEUBA: Okay.

21 CHAIR BALLINGER: Excuse me. Back up one

22 slide, please.

23 This 1,000-hour test, you're talking about

24 an extrapolation of about a factor of 50. And are you

25 satisfied that you can do that extrapolation? Is

there data from other fuel assemblies that leads you to believe that you're conservative enough, so that with the reduced flow rate and all those kinds of things, you can do that extrapolation? Because sometimes grid-to-rod fretting is not linear.

MR. LINIK: I hear what you're saying. There is no requirement to do a certain percentage of the fuel assembly's life. This was a test that is typically done for a standard fuel assembly. We essentially saw the results that we expected. No indications of wear, unusual wear. And so, we were satisfied with those results. Given our low flow and the robust design of the fuel assembly, and its historical performance with regard to grid-to-rod fretting, we don't expect to see anything in the normal operation over the life of the fuel assembly.

CHAIR BALLINGER: So, there's no risk of confirmation bias?

MR. LINIK: There's always some risk of that, but we're comfortable with the design and results that we've seen from the testing.

MEMBER MARCH-LEUBA: Given there are no LTAs and confirmation bias, and all this, is there a thought of having a mid-cycle inspection? It will be a big pressure to show reliability and we can run

1 forever.

2 MR. LINIK: That's always a possibility.

3 We have not put that in the plan, nor have committed

4 to doing that type of analysis. That would be beyond

5 the scope of -- yes.

6 MEMBER MARCH-LEUBA: I'm just certain that

7 it would be wise to do.

8 MR. LINIK: Okay. I understand. Note

9 taken.

10 MEMBER SKILLMAN: Larry, what's

11 interesting about these shorter assemblies is they're

12 stiffer. And the flow velocities are so low compared

13 to a regular PWR.

14 MR. LINIK: Yes.

15 MEMBER SKILLMAN: And so, our first

16 reaction is, gee whiz, very low flow velocities, very

17 low excitation mass and mechanical interaction.

18 Short, stubby, strong; good to go. It's kind of our

19 natural reaction to this. But we don't know what we

20 don't know. Is there another phenomenon that we're

21 not thinking about that can surprise us, because we do

22 have the very low flow velocities and the very stiff

23 fuel assemble? In other words, are we being -- are we

24 the frog in a glass pot in the microwave with

25 temperatures changing and we don't know?

(Laughter.)

Is there something here we ought to be thinking about that we're not thinking about?

MEMBER BLEY: In Dick's view, the focus has been on where we've had problems before and why this would help us. But how could it hurt us?

MEMBER SKILLMAN: That's the question.

CO-CHAIR KIRCHNER: Yes, crud is one thing that comes to mind for me at much lower velocities, that any impurities and such might preferentially deposit or settle out in places that you wouldn't expect normally with much higher flow velocities.

MEMBER MARCH-LEUBA: Well, that's one concern I have, and it's because I don't operate a reactor. It's that, during refueling, you're going to fill up the reactor with pool water, which is going to be nice water, but it's not going to be as clean. So, before you start operating, you have to clean it up.

MR. LINIK: Correct.

MEMBER MARCH-LEUBA: There is a possibility of a lot loose parts and crud and chemistry. You're filling it up with pool water. So, okay, just putting it out there. Just think about it.

MR. LINIK: Understood.

MEMBER REMPE: So, your response to Jose's

1 question kind of surprises me because Section 4.2.4.6
2 talks about a detailed surveillance program that's
3 planned following the irradiation of the fuel assembly
4 and CRAs in the first license module. And you mention
5 crud deposition, corrosion, et cetera, et cetera.
6 Maybe you ought to elaborate since you said, "No,
7 we're not planning a mid-cycle inspection." What are
8 you planning?
9 MR. LINIK: We're planning an end-of-cycle
10 fuel assembly inspection plan. The details are yet to
11 be worked out, you know, what fraction of assemblies
12 and how many of which type of tests we're going to
13 perform or measurements we're going to perform on the
14 fuel assembly. We are committed to studying the
15 behavior of these fuel assemblies throughout their
16 life to confirm what we've analyzed.
17 MEMBER REMPE: So, throughout our
18 interactions with NuScale recently, usually the
19 response is, "Oh, we're going to leave that to the COL
20 applicant." Is this something NuScale is going to
21 determine or is this something you're going to leave
22 to the first COL applicant?
23 MR. LINIK: This is something that will
24 likely be driven by NuScale in conjunction with the
25 owner.

MEMBER REMPE: But the NRC will have no oversight?

MR. LINIK: I am sure the NRC will have the oversight that --

MEMBER SKILLMAN: A lot of oversight.

MR. LINIK: -- they're allowed to, yes. I don't expect we're going to be doing this completely independently without oversight.

MEMBER REMPE: When would that be determined? After the DCA or -- it's not part of the DCA.

MR. LINIK: That would be determined likely during the COL in conjunction with the customer.

MEMBER REMPE: Okay.

MR. SCHULTZ: Larry, just to follow up with the members' questions about low flow and stiffness in the assembly, as the design has moved forward -- and it's now been a few years as that's been developed -- have there been issues related to that that have been discussed with either the current vendor or the previous vendor that brought to attention any -- any -- issues that might be anticipated due to the design change?

MR. LINIK: When we created our

relationship with Framatome, there is a significant effort that was jointly performed between NuScale and Framatome to look at the application of their technology to our environment. And there were no "gotchas," no discovery of things that we don't know we didn't know. That's the hardest part of the quadrant to access. But we did our due diligence to make sure that the technology that they're applying to this operating environment is safe and appropriate.

MR. SCHULTZ: And this was with your team and the Framatome fuels experts team?

MR. LINIK: Yes, that is correct.

MR. SCHULTZ: Both in terms of the manufacturer as well as design?

MR. LINIK: Correct.

MR. SCHULTZ: And analysis?

MR. LINIK: Correct.

MR. SCHULTZ: Thank you.

MR. LINIK: We manufactured five prototype assemblies. So, we have at least some experience with the fabrication. It's virtually no different than the existing method, except that the tools are much closer together than they are for a standard length.

MR. SCHULTZ: Any discussion of Member Kirchner's question about the crud and corrosion?

1 MR. LINIK: We've looked at crud and
2 corrosion, and the corrosion, in accordance with the
3 Propernick methodology. The end-of-life, expected
4 worst-case corrosion thickness is about 30 microns.
5 Crud, there are very few predictive tools available.
6 We've worked with Castle to some extent, even though
7 that's a very nascent stage of applicability. And we
8 haven't found anything unusual or expect anything
9 unusual at this point. And that's one of the reasons
10 why we've committed to the post-irradiation
11 examination program.
12 MEMBER CORRADINI: But let's just take
13 that as an example. I don't know what tool you use.
14 But if I'm down from "X" to "Y" -- I'm not sure if I'm
15 supposed to say what the flow velocities are -- but if
16 I'm down from "X" to "Y," has there been any sort of
17 analysis that show is it a linear effect, is it non-
18 linear? Is there any expectation?
19 MR. LINIK: There is no expectation. Like
20 I said, we did some preliminary calculations, and it
21 showed no unusual behavior --
22 MEMBER CORRADINI: Okay.
23 MR. LINIK: -- relative to the deposition.
24 It's a complex phenomena, as you know, and it's going
25 to depend on the in situ environment with how that all

1 comes together with the different materials in the
2 loop.
3 CO-CHAIR BALLINGER: I think I would avoid
4 using the word "show" and use the word "suggested".
5 MEMBER CORRADINI: Right.
6 MR. LINIK: Okay.
7 MEMBER CORRADINI: Well, that's fine.
8 MEMBER MARCH-LEUBA: I would expect, given
9 the low flow velocity, it is clear it will not have
10 that much impact on the flow. You will see it first
11 on an axial tail. And that would be much, much more
12 evident.
13 MR. LINIK: That is a possibility.
14 MEMBER MARCH-LEUBA: It happens in every
15 PWR.
16 MR. LINIK: Yes.
17 MEMBER MARCH-LEUBA: You will get it.
18 MR. LINIK: Okay.
19 MEMBER MARCH-LEUBA: How much you will
20 get --
21 MR. LINIK: That's the question.
22 MEMBER MARCH-LEUBA: -- .1 percent or 10
23 percent, that's something else.
24 MR. LINIK: All right.
25 MEMBER MARCH-LEUBA: But that's something

to be aware of.

MR. LINIK: And we are aware of that, and look forward to following the life of these assemblies.

Okay. Next slide. Two slides. Okay.

In addition to the other mechanical test, we do liftoff testing, pressure drop testing, and drop testing or failure testing of the nozzles.

Next slide.

So, the control rod assembly, again, this is based off of existing Framatome technology, standard 17x17 CRA design. We use hybrid rods, silver-indium-cadmium and boron carbide. The lower 12 inches is silver-indium-cadmium to protect the B4C from the core flux. The B4C is used for hold-down, and there's 62 inches of that above the silver-indium-cadmium.

Standard design, one-piece cast stainless steel spider. Flex joints to allow for minor misalignments during insertion/withdrawal.

And a table of the basic parameters is provided for your review.

MEMBER MARCH-LEUBA: And other than the length, it's the standard design? I'm worried about binding during scram, low boiling, something like

1 that.

2 MR. LINIK: Yes. Well, on a future slide

3 we can discuss that a little more.

4 MEMBER MARCH-LEUBA: But there is

5 experience with this. It is not one of a kind other

6 than the length.

7 MR. LINIK: The length is one of a kind,

8 absolutely.

9 CO-CHAIR BALLINGER: It's probably good to

10 make a comment here, which is going to be in general.

11 The use of high-strength materials, in this case

12 there's an X750 spring. I've gone through most of the

13 specifications for all the materials, and, of course,

14 you're within a certain specification. But those

15 specifications are primarily designed to deal with

16 strength, yield strength, those kinds of things.

17 MR. LINIK: Uh-hum.

18 CO-CHAIR BALLINGER: Within each

19 specification, there's a range. So, in this case,

20 it's a double temper, spring temper. That's a higher-

21 strength spring. Fine. But now you're sticking it in

22 some cases in water at a lower temperature than 600 or

23 so. This is about 50 or 60 degrees lower temperature.

24 And so, within that specification, a

25 spring temper, for example, is the worst case. Now

1 it's okay, according to the spec and according to the
2 EPRI guidelines, but the best case is quite a bit
3 better. And you have an opportunity to, with this
4 design, to allow for using a better material from the
5 standpoint of environmental degradation. And so, I'm
6 curious as to whether or not you folks have actually
7 thought about that. So, you're within the
8 specifications, but within each specification is there
9 a choice within that that minimizes the long-term
10 effect of, say, hydrogen embrittlement for these
11 materials, bolts, and springs, and things like that?
12 MR. LINIK: I'm trying to put my brain
13 around that.
14 CO-CHAIR BALLINGER: For example, the
15 spring temper, in the DCA, it says, well -- or in the
16 SER as well -- it say's, well --
17 MEMBER SKILLMAN: Stay with the DCA.
18 CO-CHAIR BALLINGER: We'll stay with the
19 DCA. We don't have any experience, we have no
20 experience with failures with this heat treatment.
21 MR. LINIK: Right.
22 CO-CHAIR BALLINGER: Well, the reason is
23 nobody is using it.
24 MR. LINIK: Fair enough.
25 (Laughter.)

1 Again, the materials were picked for their
2 suitability for their purpose and environment, as with
3 all the other materials.
4 CO-CHAIR BALLINGER: Okay.
5 MR. LINIK: We don't expect failure of
6 this component within the environment.
7 CO-CHAIR BALLINGER: We never expect.
8 MR. LINIK: I agree. But you make the
9 best choice you can at the time.
10 CO-CHAIR BALLINGER: That's why I'm
11 cautioning.
12 MR. LINIK: The caution is noted.
13 MEMBER SUNSERI: I've got a question about
14 the control rod configuration. I read the description
15 of why the hybrid design and the B4C and the gassing
16 effect. There has been some industry experience with
17 swelling at the rod tip of the silver-indium-cadmium.
18 I didn't see any accounting for that in your design.
19 Have you accounted for that?
20 MR. LINIK: Good question. Yes. The
21 silver-indium-cadmium tip is broken up into two
22 segments. And the bottom segment is actually an
23 annular piece of silver-indium-cadmium. And in the
24 central annulus is a pedestal which supports the upper
25 segment of silver-indium-cadmium, and that has been

1 demonstrated to reduce the propensity for slump
2 failure of the silver-indium-cadmium tips. Again,
3 this is standard Framatome technology.
4 MEMBER SUNSERI: Thank you.
5 MR. LINIK: So, for the control rod
6 design, we do the standard suite of analyses that
7 Framatome performs. And the table of materials is
8 provided for your reference.
9 Move to the next one.
10 So, we actually did perform drop tests
11 last year, and this graph shows the results. The red
12 line is the curve we used for safety analysis. And
13 the black line is what you might call almost worst-
14 case drop for the CRA, the test bed.
15 And what I mean by that is that in this
16 test all of the interfacing components, you have the
17 CRA, the housing, guide cards. You have five support
18 spacers up the riser. You've got the pressurizer
19 through-hole in the pressurizer plate, and it goes
20 into the drive mechanism housing.
21 And so, all of the components below the
22 drive housing were positionable with devices that
23 allow you to measure the displacement. And in this
24 case, the engineer responsible wanted to push the
25 limits to see how far we could go on the displacement.

1 And on this particular alignment test, they couldn't
2 withdraw the rod to perform the drop, and then, they
3 just backed off slightly to allow the rod to be
4 withdrawn and dropped. And so, this is what you might
5 consider a near-limiting case drop.
6 MEMBER SKILLMAN: Is this graphic that you
7 show the result of the testing at Erlangen?
8 MR. LINIK: That is correct.
9 MEMBER SKILLMAN: Okay. So, your current
10 book, page 1.5-6, is saying, in the future, in
11 reality, that testing is complete.
12 MR. LINIK: That testing has been
13 completed.
14 MEMBER SKILLMAN: Okay. Now you have a
15 forest of time traces or is this the single and only
16 one?
17 MR. LINIK: Well, this is just one of --
18 MEMBER SKILLMAN: A forest?
19 MR. LINIK: -- dozens. Yes.
20 MEMBER SKILLMAN: Okay. Thank you.
21 MEMBER SUNSERI: How does the overall
22 weight of the drive shaft and the control rod, and all
23 that, compare to the existing fleet? It would seem to
24 me it's going to be, even though the control rod is
25 smaller, the overall weight might be heavier.

1 MR. LINIK: Yes, it is. It's about 60-70
2 pounds heavier. I believe ours weighs in at about 328
3 pounds. I think a typical PWR is in the neighborhood
4 of 285-290.
5 MEMBER SUNSERI: So, does the dashpot
6 region, then, account for that additional force that
7 might be applied?
8 MR. LINIK: Well, it --
9 MEMBER SUNSERI: In aiding the reduced
10 flow that would resist the dropping, right?
11 MR. LINIK: The dashpot design, we left
12 the dashpot segment the same length as a typical PWR.
13 And so, it occupies a much greater fraction of the
14 height of our guide. There is a flow hole in the cap
15 screw that connects the bottom nozzle to the guide
16 tube, and there's a 40-mL flow hole that restricts
17 flow that also contributes to the dashpot action.
18 And so, the results of these tests, the
19 figure of merit is the compression of the spider
20 spring. And we showed, through every test, a positive
21 margin to the full compression of that spring, meaning
22 that the dashpot and spring absorb the full energy of
23 the drop.
24 CO-CHAIR KIRCHNER: Are your tube designs
25 the same as what Framatome has already deployed with

1 that leakage out the bottom?

2 MR. LINIK: Correct.

3 CO-CHAIR KIRCHNER: It's the same design?

4 So, they haven't seen crud or other issues plugging

5 that?

6 MR. LINIK: I am unaware of any such OE.

7 MEMBER SKILLMAN: Based on your

8 description, what I read is that there are four holes

9 in the dashpot plus the hole in the cap screw.

10 MR. LINIK: Correct.

11 MEMBER SKILLMAN: There is a term that's

12 not popular, but it's called "tail rod". Steam

13 locomotives have tail rods where the pistons are

14 balanced. Otherwise, you can blow out one of the

15 cylinders.

16 When this rod drops, you've got a

17 hydraulic load.

18 MR. LINIK: Correct.

19 MEMBER SKILLMAN: Pressure times area and

20 the de-acceleration as that rod line drops into the

21 end of the guide tube.

22 MR. LINIK: Correct.

23 MEMBER SKILLMAN: And that's why I asked

24 the question about loose part and punching that screw

25 out of there. So, I just want to leave that on the

record.

MR. LINIK: Okay.

MEMBER SKILLMAN: Another question. What is unique about this design is your control rod drive extension is actually in the steam space of the pressurizer.

MR. LINIK: Correct.

MEMBER SKILLMAN: What consideration has been given to chemical buildup on the portion of the shaft that is in the steam space, if you will, for the quiescent period? Twenty-month fuel cycle, if you're running breaker to breaker, you're going to run 695-700 days.

MR. LINIK: Right.

MEMBER SKILLMAN: And there sits that extension at your TSAT for your pressurizer.

MR. LINIK: Yes.

MEMBER SKILLMAN: What keeps that from getting gooed up with whatever is evaporating off the top of the pressurizer? And if so, that goo keeps this rod from flying at the time it's required to.

MR. LINIK: That is outside my scope in Chapter 4. The materials and material performance of the shaft in its environment is not part of this scope.

1 MEMBER SKILLMAN: So, it's Chapter 5?
2 MR. LINIK: Chapter 5, you'll probably --
3 MEMBER SKILLMAN: All right. This
4 afternoon we'll get to that one. Okay. Fair enough.
5 MR. SCHULTZ: Larry, can you provide a
6 reference for the datasets associated with the testing
7 here, the forest?
8 MR. LINIK: Yes, we could give you the
9 reference to that material.
10 MR. SCHULTZ: That would be good.
11 And you described how the loading case was
12 determined here. With regard to safety analysis, how
13 was that derived?
14 MR. LINIK: So, back in 2015, before the
15 test was fully developed and conceived, we had
16 Framatome perform analyses using their drop code that
17 the coefficients were adjusted for our environment to
18 provide us a range of drop curves with variations,
19 tolerance variations, of the components that would
20 lead to a conservative drop curve. And then, our
21 safety analysis took that curve and doubled the time
22 axes for it to drop. And that's how we get the curve
23 that you see below or see on the presentation.
24 MR. SCHULTZ: The red one?
25 MR. LINIK: The red line, yes.

1 And it's not shown on this, but the
2 prediction lines up very well with the nominal drop
3 that's unperturbed.
4 MR. SCHULTZ: Okay. Thank you.
5 MR. LINIK: So, the conclusion, we've
6 chosen standard 17x17 Framatome technology. We're
7 using NRC-accepted codes and methods for the design
8 and analysis of these components. And we've
9 demonstrated compliance with all requirements.
10 And that concludes my first portion of the
11 presentation. So, if you have any questions or
12 comments at this point?
13 (No response.)
14 Okay. I'll pass this on to Allyson.
15 MS. CALLAWAY: Okay. I'll cover Section
16 4.3.
17 So, the section of the DCA follows the
18 standard review plan. The core design and neutronic
19 analysis is performed with the CMS5 code suite from
20 Studvik, including CASMO5 and SIMULATE5, which are
21 steady-state codes.
22 The methods have been approved for use, in
23 NuScale's "Nuclear Analysis Codes and Methods
24 Qualification" Topical Report.
25 So, for the rest of this section, we're

1 going to talk specifically about Section 4.3.2, which
2 is the nuclear design description.
3 So, this figure depicts a representative
4 core design. The core is designed for two-year
5 cycles. So, approximately one-third of the core is
6 reloaded for each cycle.
7 So, blue locations are fresh fuel. The
8 red locations are once burned, and the yellow are
9 twice-burned locations.
10 The core has a thick stainless reflector.
11 It minimizes neutron leakage. And the loading
12 pattern, assembly shuffling, and heavy reflector all
13 help control radial peaking.
14 We use an equilibrium representative core
15 design for demonstration of the methods that are
16 described in the DCA. We place limits on the
17 reference core design. Those limits would also be
18 applied to the design of other cycles. So, any cycle
19 that doesn't meet the design of the limits would
20 either be redesigned in order to meet the limits or
21 the applicable safety analyses would be re-performed
22 at new limits to demonstrate that the core design is
23 acceptable.
24 So, each cycle is designed to meet general
25 cycle requirements like energy output and cycle

length, and to meet constraints like burn-up, enrichment, and gadolinia limits.

Core design limits are verified for each cycle design. So, as long as the core design limits are not for a cycle, the downstream analyses that have already been evaluated at those limits still have to be re-performed. Analyses that don't have core design limits specified would still need to be performed on a cycle-specific basis to ensure that SAFDLs aren't exceeded.

Core design limits are set to ensure that sufficiently conservative values representing allowable plant conditions are analyzed. So, some reactor initial conditions are protected, either through tech specs or surveillance or trips. And other reactor initial conditions don't require protection because they're sufficiently bounded through analysis.

So, for example, some power distribution initial conditions are protected through tech spec, surveillances, and LCOs, like axial offset or radial peaking of delta-H. And then, an example of protected through analysis would be the Doppler coefficient.

MEMBER SKILLMAN: Allyson, do you anticipate axial offset? Dr. March-Leuba raised the

1 question about boron buildup in the upper part of the
2 fuel assembly. Is that an issue that NuScale is
3 anticipating; hence, your comment about axial offset?
4 MS. CALLAWAY: Is axial tilt due to
5 buildup an issue that we're anticipating? Is that
6 your question?
7 MEMBER SKILLMAN: I'm asking if the
8 comment that you made about axial offset is based on
9 some knowledge within NuScale that you may have, that
10 this design may have boron buildup on the upper
11 portions of the fuel assembly; thus, driving the axial
12 offset.
13 MS. CALLAWAY: In general, I would say
14 it's not a concern. We have a lot of thermal margin.
15 So, axial offset is something that we're monitoring
16 through tech specs. Yes, I guess I'll leave it at
17 that.
18 MEMBER SKILLMAN: What it does is it
19 drives down our profile. You know, what happens is
20 your linear heat generation rate is changing in a
21 lower part of the core, and it's very, very subtle.
22 And you can only see it on your SPMDs. You can only
23 see it on your in-cores. But if you're aware that you
24 might be getting the boron buildup, for the reasons
25 that Dr. March-Leuba mentioned, then you can be on top

of it.

MS. CALLAWAY: Yes. So, we will be monitoring axial offset, and we'll have predictions using the SPMDs as a comparison, where we'll be doing --

MEMBER SKILLMAN: Okay. Thank you.

MS. CALLAWAY: Okay.

MEMBER MARCH-LEUBA: You mentioned you'll be monitoring parent tech specs. And I've been studying the tech specs, the beginning tech specs, on the core, and it's not there.

MS. CALLAWAY: That's correct.

MEMBER MARCH-LEUBA: Yes. So, you will be monitoring it out of the goodness of your heart?

MS. CALLAWAY: Well, we'll be monitoring axial offset in accordance with the tech specs.

MEMBER MARCH-LEUBA: The tech spec doesn't require a test, does it?

MS. CALLAWAY: It requires monitoring of axial offset, yes.

MEMBER MARCH-LEUBA: Monitoring, but there is no specific thresholds? I'll have to look it up.

MS. CALLAWAY: The specific axial offset would be specified in the COLAR.

MEMBER MARCH-LEUBA: I'm just looking at

one of the tables.

MEMBER CORRADINI: Say that again, though, a little louder. I didn't understand. So, what's going to be specified again? I'm sorry.

MS. CALLAWAY: The axial offset window for a cycle would be specified in the COLAR.

MEMBER CORRADINI: Oh, okay.

MEMBER SUNSERI: I think maybe the confusion might be, at least I'm hearing you may be talking past each other. I think there's a phenomena called axial offset anomaly, right? And then, there's the normal, routine monitoring axial offset for operational, right? So, is that what you're addressing, the anomaly, the buildup of corrosion on the outside causing a skewed axial offset?

MS. CALLAWAY: Not specifically, but we will be monitoring the actual axial offset, and then, comparing that to predicted axial offset. And as those two values start to not match or drift apart from each other, then there would be an indication that we're having an AOA issue.

MEMBER MARCH-LEUBA: As you know, there are two axial offsets. One is a xenon oscillation, which is a big one, and the other one is a boron buildup, which is just a small one. And the small is

1 the low one. Are you talking about -- obviously, the
2 xenon, nobody can miss it, right? We're talking about
3 the little one. And you will be monitoring those
4 predictions of CASMO/SIMULATE? That's what you're
5 saying? Based on four axial SPMDs?
6 MS. CALLAWAY: Yes.
7 MEMBER MARCH-LEUBA: Okay. I am looking
8 at Section 5.6.3 of the Generic Tech Specs, where it
9 specifies what shall be in the COLAR. I don't see it.
10 MS. CALLAWAY: That will be determined
11 during the COL application.
12 MEMBER MARCH-LEUBA: There is an axial
13 offset item, but I thought that was referring to the
14 boron axial offset, not the -- sorry -- the xenon
15 axial offset. Or is it in the event of both?
16 MS. CALLAWAY: The axial offset window
17 will apply to any phenomena that's causing a change in
18 the axial offset, whether it's a xenon oscillation or
19 boron buildup or the normal power distribution changes
20 and rod insertions.
21 CO-CHAIR KIRCHNER: It will become
22 negative with burn-up. With the burn-up, the axial
23 offset will go more negative by end of life. It will
24 push it down, therefore. And the boron effect, if it
25 occurs, will just aggravate that.

1 MEMBER SKILLMAN: Like Allyson says, it's
2 going to be monitored. Whether it's xenon or whether
3 it's poisonous or whether it's boron buildup, the
4 control room team is going to see it and the shift
5 technical advisors will pick it up. They'll know it's
6 there, yes.
7 MEMBER REMPE: So, a while ago, when we
8 looked at the methodology for how you were doing these
9 analyses, and even in the material we read, it said
10 you're going to be -- you compared the predictions
11 with results for a PWR. And yet, you're going to be
12 running at a much lower pressure.
13 And I realize like the moderator and
14 temperature and Doppler reactivity coefficients have
15 a smaller pressure effect, but there is some pressure
16 effect. And I was thinking about that when I was
17 preparing for this meeting. And you talk about
18 sometimes you've done very conservative calculations
19 and you've got lots of margin. How much is the
20 pressure effect? Is it 10 percent? Is it negligible?
21 Less than 1 percent? It seems to me that there is
22 some uncertainty because you don't have the data to
23 benchmark these methods.
24 MS. CALLAWAY: Sure. So, I can't quantify
25 the exact effect on pressure, but it's very close to

negligible, if not negligible.

MEMBER REMPE: So, you think it's less than 1 percent? Because that's what I was wondering, is how much is it.

MS. CALLAWAY: Oh, less than 1 percent of what? What are we comparing it to?

MEMBER REMPE: Well, uncertainty. You said you have a lot of margin and conservatism. How much is the error in the margin and what values are you're predicting? And would pressure be a negligible effect that's less than 1 percent in your conservative margin, is where I'm coming from. Can I just forget about this because you're so confident the pressure effect is low? I don't know.

MS. CALLAWAY: So, any effect that pressure is going to have we'll see in the density of the moderator.

MEMBER REMPE: Right.

MS. CALLAWAY: And it would show up in the moderator temperature coefficient where the moderator does the --

MEMBER REMPE: And how much is that pressure effect and the moderator temperature coefficient and the Doppler coefficient? Is it 1 percent?

1 MS. CALLAWAY: It's probably somewhere
2 around 1 percent. I can follow up with you on
3 something more specific.
4 MEMBER MARCH-LEUBA: Let me help you.
5 It's very small.
6 MEMBER REMPE: It's less than 1 percent?
7 That's what I'm wondering about. Okay. Thank you.
8 MEMBER MARCH-LEUBA: You should never just
9 monitor temperature coefficient. You should just
10 monitor density coefficient when you build everything.
11 But it's a temperature.
12 MEMBER REMPE: Okay.
13 MS. CALLAWAY: Okay. So, we've covered a
14 bit of this already, but we'll go through it. So,
15 there are 16 CRAs and they're arranged into a
16 regulating bank, which is shown in blue in the figure,
17 and then, a shutdown bank, which is shown in green.
18 And the regulating bank is split into two groups that
19 can move independently. And the group movements are
20 shown in the middle figure, which is the power
21 dependent insertion limits.
22 So, both the axial offset window and the
23 PDILs are determined in conjunction with each other to
24 make sure that the rod positions and the axial offsets
25 are compatible.

The permutations of axial and radial power distributions are analyzed within the protected bounds of the axial offset window and the power dependent insertion limits to ensure that they're both appropriately set.

So, the combination of protection analyzed operating space ensures that analysis limits aren't exceeded and the initial conditions for analysis of design basis events remain bounding.

And the last bullet, CRA movement is the only credible cause of both axial and radial xenon oscillations and also shows the core is stable to xenon oscillations. And that's due to the small core size and the height to the annular ratio that's close to one.

Next slide.

Okay. So, Section 4.3 described the design basis for shutdown margin and long-term shutdown capability, and the definitions for both of them are on this slide. There's a few primary differences between the two. So, the shutdown margin accounts for the full power defect and accounts for the temperature defect down to 420 degrees, which is the hot zero power temperature.

MEMBER MARCH-LEUBA: Let's say that

temperature again.

MS. CALLAWAY: Four hundred twenty degrees.

MEMBER MARCH-LEUBA: All right. I thought so.

MEMBER CORRADINI: And that's defined as what?

MS. CALLAWAY: The hot zero power temperature.

MEMBER CORRADINI: Hot zero power?

MS. CALLAWAY: Shutdown margin assumes the worst rods stuck out, and it includes margin for uncertainty and has no boron addition associated with it.

So, for long-term shutdown margin, the difference -- it still counts for the full-power defect, but here it accounts for the temperature defect all the way down to the pool temperature. It assumes all the rods are in, but has no xenon and no boron addition.

So, there's two distinct definitions of shutdown margin and long-term shutdown, and those satisfy GDC 26 and PDC 27. So, this is the design basis, and then, the demonstration of the acceptability of the design basis is performed in the

Chapter 15 analyses.

MEMBER MARCH-LEUBA: And I apologize because we're going to have a long discussion about this.

First, where do those definitions come from?

MS. CALLAWAY: They're defined in Section 4.3.

MEMBER MARCH-LEUBA: I'm sorry, your definitions?

MS. CALLAWAY: I believe the shutdown margin definition is a fairly standard definition.

MEMBER MARCH-LEUBA: I couldn't find it in 10 CFR 50.

MS. CALLAWAY: Okay.

MEMBER MARCH-LEUBA: There is only one minor reference to it, but it's not properly -- it's not defined. So, I guess it's up to you and the staff to agree on this.

So, let's start with the simple one, which is refueling. Those are the numbers. So, I'm looking at Table 4.3-2. Can you get it? Do you have it?

MS. CALLAWAY: Sure.

MEMBER MARCH-LEUBA: I could give you my copy.

1 So, at the end of some page -- I don't
2 know what page it is -- page 95 on the PDF. So, at
3 the bottom, this table is Table 4.3-2. It's entitled,
4 "Nuclear Design Parameters for the Equilibrium Cycle".
5 And the fact that it's done for the equilibrium cycle
6 makes me assume that this is going to be repeated for
7 every cycle for every calculation. So, this is going
8 to be a cycle-specific calculation for every reload.
9 This is not a bounding one. Is that correct?
10 MS. CALLAWAY: The calculation of shutdown
11 margin?
12 MEMBER MARCH-LEUBA: The calculation will
13 be repeated for every reload. All these numbers, you
14 will calculate it for cycle 1, cycle 2, cycle 3, every
15 reload?
16 MS. CALLAWAY: The calculation to confirm
17 that these numbers are still appropriately
18 conservative or bounding would be performed every
19 cycle, yes.
20 MEMBER MARCH-LEUBA: These are not
21 bounding numbers; these are -- oh, okay. Let's go
22 down to the boron concentration, which is what I'm
23 more interested in. It tells me that the design basis
24 refueling is 2,000 ppm boron. That means that you
25 want to refuel at 2,000 ppm. That's the way I read

1 it.

2 MS. CALLAWAY: Uh-hum.

3 MEMBER MARCH-LEUBA: It tells me that, at

4 420 degrees Fahrenheit, which is Mode 2, hot shutdown,

5 you must have 240 ppm of boron or you will not satisfy

6 the requirements. Is that what it says?

7 MS. CALLAWAY: Must have 240 ppm of boron?

8 MEMBER MARCH-LEUBA: It tells, the bottom,

9 the next-to-the-last line says, "Safe Shutdown," you

10 need to have 240 ppm boron. This is, I assume, a

11 simulated calculation where you put nominal

12 conditions, 420 degrees, zero power, and calculate a

13 delta-K effective versus the 100 percent power, which

14 will be your delta. So, what does that do for you?

15 Describe it in your own narrative.

16 MS. CALLAWAY: Yes, that is what that

17 number would be. Before we move, transition from Mode

18 1 to Mode 2, though, we would ensure that all of the

19 rods are fully inserted.

20 MEMBER MARCH-LEUBA: But one is out.

21 MS. CALLAWAY: Yes, conservatively assumed

22 one is out.

23 MEMBER MARCH-LEUBA: Yes, because that's

24 one of the conditions in 10 CFR 50 -- even you don't

25 have 50 -- but this one has a safe shutdown.

1 MS. CALLAWAY: Uh-hum.

2 MEMBER MARCH-LEUBA: A safe shutdown

3 implies one rod out. So, you have to have one rod

4 out.

5 And is 240 the expected boron

6 concentration at the end of the cycle?

7 MS. CALLAWAY: No. The end-of-cycle boron

8 concentration would be approximately zero.

9 MEMBER MARCH-LEUBA: So, you will not have

10 240 at the end of the cycle?

11 MS. CALLAWAY: That's right. So, we would

12 be borating as we transition from Mode 1 down to

13 refueling.

14 MEMBER MARCH-LEUBA: Using what safety

15 system?

16 MS. CALLAWAY: No safety-related system.

17 MEMBER MARCH-LEUBA: Okay.

18 CO-CHAIR KIRCHNER: Yes, your CVCS is not

19 a safety-related system.

20 MEMBER MARCH-LEUBA: I was being

21 facetious.

22 (Laughter.)

23 I am well aware that the BAS and CVCS are

24 not safety-related.

25 So, your boron concentration at the end of

the cycle, you expect it to be as low as zero?

MS. CALLAWAY: It's something more practical, between 5 and 20 probably.

MEMBER MARCH-LEUBA: So, you do not have, at the end of cycle, you cannot reach safe shutdown, according to this calculation, which contradicts Table 4.3-3.

MS. CALLAWAY: So, we would meet the instantaneous shutdown margin requirements, which is cooling to 420 degrees, the hot zero power temperature.

MEMBER MARCH-LEUBA: That's not what this says. What this says is you need 240.

MEMBER CORRADINI: No, that isn't how I read it. I read it, for them to go from one mode to another mode, they've got to go up in boron concentration. But, at Mode 1, there is safe shutdown. That's what I thought you just said.

MS. CALLAWAY: That's correct.

CO-CHAIR KIRCHNER: The definition is safe shutdown is .98. They're not at .98 with that low of boron and a rod stuck.

MEMBER MARCH-LEUBA: Look at Table 4.3-3.

MS. CALLAWAY: I can clarify.

CO-CHAIR KIRCHNER: You need 200 or more

1 ppm boron.

2 MS. CALLAWAY: This concentration assumes

3 no xenon. The instantaneous shutdown margin assumes

4 that there's xenon.

5 MEMBER MARCH-LEUBA: You have a very

6 distinct probability of having a scram when you are

7 starting up, and you are xenon-free.

8 MS. CALLAWAY: So, if we had no xenon and

9 we were restarting at the end of cycle, we would have

10 a boron concentration much higher than zero or near

11 zero ppm to account for the --

12 MEMBER MARCH-LEUBA: Has that analysis

13 been done? See, my problem, let me put it on the

14 record. You guys have a beautiful, gorgeous design.

15 And I think that it satisfies all the requirements.

16 I'm complaining about the paperwork. I'm complaining

17 about the fact that you guys haven't done the homework

18 or at least have not documented the homework. Maybe

19 you have done it and you have not documented it.

20 But those situations, there are many

21 possible mistakes of this reactor. And maybe you

22 don't have to document everything on the FSAR, but you

23 have to have a Topical -- I have to have enough

24 confidence that you've done it, and right now I don't

25 have confidence that you've done it, because every

1 time I throw something out, somebody says, "Aw, no
2 problem about that." "But show me the analysis."
3 "Oh, well, we don't have it."
4 MS. CALLAWAY: Understood.
5 MEMBER MARCH-LEUBA: So, I'm complaining
6 about that. There are many possible paths around
7 here. And you give me one, and one that seems to be
8 incompatible with Table 4.3-2 and 4.3-3. Because
9 4.3-3 says I actually 4,000, almost 5,000, pcm margin,
10 which when you take the 2,000 for .98, you end up with
11 2700, which is pretty good.
12 On Table 4.3-2, you tell me, no, you
13 don't. For the same conditions in 4.3-3, and boron
14 being zero, I don't make it.
15 MS. CALLAWAY: So, all the xenon, the
16 boron concentration, the power, and the temperature
17 would also all be accounted for in surveillance of the
18 shutdown margin, which is done in all modes,
19 effectively.
20 MEMBER MARCH-LEUBA: You have an
21 instantaneous shutdown margin calculated in the plant
22 computer? I don't think so.
23 MS. CALLAWAY: I can't answer that.
24 MEMBER MARCH-LEUBA: I don't think so.
25 You have core limits that your operator will drive the

1 machine to. And I see a lot of inconsistencies here.
2 And the biggest one is -- and we're talking still
3 refueling, okay? I want to talk to 4.3-3 afterwards.
4 I apologized in advance. I'm going to go
5 all the way to the break and probably a little longer.
6 So, in order to do the refueling, let's go
7 to the last line of 4.3-2. It tells me that you must
8 have 736 ppm boron at the end of cycle or 1700 at the
9 end of cycle. You cannot go into the refueling mode,
10 Mode 5, well, actually, Mode 4 on this issue unless
11 you have that much boron.
12 MS. CALLAWAY: Right. So, we would borate
13 to reach those concentrations, and then, once exposed
14 to the pool concentration, the pool concentration will
15 be higher than that and satisfies that minimum
16 requirement to meet the shutdown ratio.
17 MEMBER MARCH-LEUBA: So, we can make an
18 argument that refueling the reactor safely is not the
19 safety function. But you can also make the argument
20 that refueling the reactor in a superior condition is
21 a safety function.
22 If you need to add boron, you need to have
23 operators able to look at instrumentation in the
24 control room, activate these non-safety grade
25 additional controls driven by software to insert it.

They actually have to line up 10 different valves which are in series between the boron tank and the reactor, 10 different valves. Different technologies. There are manual valves. There are check valves. There are multiple-break electric valves which are controlled by a digital control, driven by software which is not safety grade, and then, you have pneumatic valves, which want to be closed by the potential energy, and you must keep them open against that potential energy.

When I look at that system, I say, what can possibly go wrong? I mean, 10 single failure points. I'm not counting the two parallels because those are in parallel. Those are redundant.

So, when you take credit for this boron addition, some of our members have heartache taken purely for a boron system that has 10 single failure points, if not more, because you also have about 2,000 valves that are birthed from that system and could divert the flow to the reactor.

So, I know members still might want to talk about refueling and on the transportation.

MEMBER SKILLMAN: I have nothing to add to this. Jose has spoken.

(Laughter.)

1 I do have to ask one question, Allyson.
2 The last meeting we had, I left that meeting with the
3 clear understanding that at the end of core life the
4 module could be moved. And I've dealt with 4.95
5 percent, a 235 core. You go critical 1100-1200, and
6 you run down, as you well say, to maybe 10 to 20 ppm
7 at the end of life.
8 What I understood from the last meeting
9 is, before the module would be moved, there was no
10 action to borate up. What I heard you just say is,
11 yes, before that module was moved, they borate up.
12 MS. CALLAWAY: So, the procedures would
13 preclude us from transitioning from Mode 1 to Mode, et
14 cetera, until --
15 MEMBER SKILLMAN: Unless you avoided --
16 MS. CALLAWAY: Yes, until the requirements
17 are met, one of which is that you can meet the
18 shutdown margin requirement for the mode that you're
19 going to enter.
20 MEMBER SKILLMAN: Thank you. That answers
21 my question.
22 MEMBER CORRADINI: So, let me ask the
23 question more generally. Is there AOO that
24 essentially responds to the inability to borate when
25 needed?

1 MS. CALLAWAY: We don't take credit for
2 boration in any of the Chapter 15 analyses.
3 MEMBER CORRADINI: I understand what you
4 just said, but let me ask Dr. March-Leuba's question
5 differently. It appears to me there's a new AOO that
6 one has to consider because I have a non-safety system
7 that is required to work. Otherwise, I can't move
8 from mode to mode. That's the way I interpret the
9 discussion we've just gone through. In other words,
10 I am stuck in Mode 1 at hot shutdown temperatures if
11 somehow I have a failure of the non-safety system to
12 be able to borate. Am I missing something?
13 MEMBER MARCH-LEUBA: Yes, you are. You're
14 missing an awful lot more things.
15 MEMBER CORRADINI: But, before we go to
16 the "more" things, am I missing something in my --
17 CO-CHAIR KIRCHNER: And you're adding
18 reactivity. You're cooling down and adding reactivity
19 with a very low margin of boron.
20 MEMBER MARCH-LEUBA: The core is in a
21 condition caused with the next Ice Age.
22 MEMBER CORRADINI: Let me ask, before you
23 answer her question, I want her to answer the
24 question.
25 MS. CALLAWAY: So, if we cool to the

1 lowest temperature of Mode 1, we're meeting the
2 instantaneous shutdown margin requirements.
3 MEMBER CORRADINI: I understand.
4 MS. CALLAWAY: Beyond that, if we were to
5 continue to cool, then we would be a long-term
6 shutdown condition with an overcooling analysis that's
7 performed at that point. And that's going to be in
8 the scope of Chapter 15.
9 MEMBER CORRADINI: Okay. Fine.
10 MEMBER MARCH-LEUBA: All right. Okay.
11 First, there are many ways to cool the reactor. After
12 a scram, I would even give you credit that a control
13 system will trip the feed water pumps. I'll give you
14 credit for that.
15 MS. CALLAWAY: Can you repeat that?
16 MEMBER MARCH-LEUBA: And you could have a
17 scram, and the feed water will not remain at the 100
18 percent. If feed water remains at 100 percent, you
19 reach 420 degrees in roughly two minutes. And it's
20 not long-term cooling. You go through 420 in minutes.
21 So, I would assume the control system after a scram
22 will trip the feed water pumps because it has too much
23 flow. But it will trip them to minimum speed, which
24 will be 10-15 percent, because this is a big path.
25 You cannot control. You need a feed water flow of 1

1 or 2 percent because you are losing feed water
2 heaters. So, you're not only putting too much feed
3 water, you're putting too much cold feed water. Okay.
4 So, the only way you can maintain 420
5 degrees and above is for the operator to first
6 recognize that it's in that condition, have the
7 instrumentation available to do it, or rely on a
8 digital control system. The only way I know how to do
9 it is like the air conditioning. It goes blast on.
10 When it cools too much, then you turn it off. So, the
11 operator will be going cooling; too cold; stop
12 cooling, and every five minutes will have to take a
13 positive action to maintain that.
14 You see, all of these are non-safety
15 systems that you claim you don't take credit for. And
16 I'm saying, I think you're taking credit for all the
17 systems for shutdown margin, which is the crown jewel
18 of our reactor.
19 MR. DRZEWIECKI: This is Tim from the
20 staff.
21 If you can go into this actually during
22 the staff's presentation as well? You know, I know
23 what you're saying, but there's a difference between
24 the ability to have a shutdown instantaneously versus
25 a hold-down. And there's a hold-down requirement we

1 came to in the past as far as the SECY paper. And
2 that's the basis for the exemptions for GDC 27.
3 MEMBER MARCH-LEUBA: Right, but that's for
4 operating reactors, correct?
5 MR. DRZEWIECKI: That's for this design.
6 MEMBER MARCH-LEUBA: For this design?
7 MR. DRZEWIECKI: Yes.
8 MEMBER CORRADINI: So, we're expecting to
9 hear from the staff about this?
10 MR. DRZEWIECKI: Yes.
11 MEMBER MARCH-LEUBA: We will hear you on
12 that one. We will hear you on that one.
13 But my claim -- I don't know if you
14 understand it -- is to maintain the reactor for 420
15 degrees Fahrenheit, you need to have AC power, feed
16 water pumps, operator, all instrumentation, control
17 room, and operator actions every five minutes.
18 MEMBER CORRADINI: I think you're right,
19 but I thought I heard her say -- and I want to make
20 sure I didn't mishear -- there's got to be an AOO
21 about overcooling that's got to either bound all of
22 this; otherwise, we've got a problem.
23 MEMBER MARCH-LEUBA: If there is, I
24 haven't seen it.
25 MS. CALLAWAY: So, there's an overcooling

1 event progression analysis that's included in Chapter
2 15.
3 MEMBER CORRADINI: Okay.
4 MEMBER MARCH-LEUBA: Which is at the
5 moment of a scram before all of this happens.
6 MR. SCHMIDT: This is Jeff Schmidt from
7 the staff.
8 No, it doesn't. So, there's an
9 instantaneous that gets you down to 420, and then,
10 there's a continued overcooling either by the decay
11 heat removal system or the ECCS, whatever your safety-
12 related system is, that goes down.
13 The analysis to show that the overcooling
14 is acceptable is in Chapter 15, just like she's
15 saying.
16 MEMBER MARCH-LEUBA: Yes, but that's
17 instantaneous.
18 MR. SCHMIDT: So, the overcooling event
19 and the potential return to criticality is two to
20 three hours out. I don't consider that instantaneous,
21 but --
22 MEMBER MARCH-LEUBA: We ought to get that
23 in Chapter 15.
24 MR. SCHMIDT: It's like she's describing.
25 It's analyzed in Chapter 15.

1 MEMBER MARCH-LEUBA: But, in my opinion,
2 if you are taking credit for the operator actions and
3 the feed water control to maintain the reactor in hot
4 shutdown, you are taking credit for that; at the
5 minimum, analyze it.
6 You cannot say, "I do not take credit for
7 operator actions to demonstrate shutdown margin,"
8 because you are. I'm not saying that you don't have
9 shutdown margin. I think you do.
10 But I'm complaining about the paperwork.
11 There needs to a new Chapter 15.10.12, which is what
12 happens after the control rooms come in. And what
13 happens if I start losing systems I didn't take credit
14 for? And it might not be, the worst might not be I
15 lose all of it. The worst might be I lose BAS, but I
16 do not lose CVCS, and I start pumping cold water into
17 it.
18 MR. SCHMIDT: So, this is Jeff Schmidt
19 from the staff again.
20 In Chapter 15, we will assume no power.
21 So, what you're describing is almost like a PWR aux
22 feed water system, right? A standard PWR can't get to
23 cold conditions on control rod insertion, either.
24 They have to get to their no-load or hot zero power
25 temperature. They can't cool down and maintain

1 shutdown margins, but they have systems to preserve
2 temperature like an aux feed system.
3 MEMBER MARCH-LEUBA: They take credit for
4 the operator being in an inhabitable control room with
5 enabled displays and --
6 MR. SCHMIDT: Yes, that's correct. That's
7 right.
8 MEMBER MARCH-LEUBA: Which they keep
9 telling me, "We don't take credit for that."
10 MR. SCHMIDT: That's right. They don't --
11 so, in a normal evolution, they will have AC power and
12 they will be able to maintain their no-load
13 temperature, right? I think their position is that
14 they're going to have, on a normal shutdown, they'll
15 have either offsite power or something that keeps AC
16 power available. When they don't have those systems,
17 then it moves into like a Chapter 15 regime.
18 MEMBER MARCH-LEUBA: Let's me just give
19 you a hint. We'll be there in July on the simulator.
20 I'd like to see how they do that for 12 modules. You
21 have a seismic event that trips all 12 modules. And
22 now, the operator has to take control of all of them,
23 and let's see where the feed water comes. If feed
24 water comes and we continue to run, you will not take
25 three hours to cool down; you will take 10 minutes.

1 The operator will have to go through 12 modules and
2 start controlling them. I'd like to see that. So,
3 they have three months to practice. Okay?
4 (Laughter.)
5 MEMBER CORRADINI: So, I suggest we move
6 on now because I think they know where we are.
7 MS. CALLAWAY: Yes.
8 MEMBER MARCH-LEUBA: Okay. But do we
9 members? Because we have to write the letter next
10 month.
11 MEMBER CORRADINI: I don't think -- well,
12 I can tell you this member's opinion. This does not
13 enter into Chapter 4. This enters into open items
14 that are driven by Chapter 15 analysis.
15 MEMBER MARCH-LEUBA: No, this is Chapter
16 4, the shutdown margin.
17 MEMBER CORRADINI: But, again, my opinion
18 is that they've described how they get to shutdown
19 under a normal operation.
20 MEMBER MARCH-LEUBA: My opinion, what I
21 want NuScale and the staff to tell me is, how come you
22 have demonstrated shutdown margin and claim that you
23 do not take credit for all these operator actions?
24 MEMBER CORRADINI: Let's have the staff
25 come up eventually and hear about that, since we're

1 going to have to ask the staff that. Because, at
2 least as I understand the SE, there's a number of open
3 items that are referred back to analyses in Chapter 15
4 that have to be closed before staff concludes anything
5 about Chapter 4.
6 MEMBER MARCH-LEUBA: But this is shutdown
7 margin. Nothing gets transferred to --
8 CO-CHAIR KIRCHNER: Well, no. No, I
9 believe that they're holding in abeyance the exemption
10 for GDC 27 until this is demonstrated in the analysis
11 in Chapter 15.
12 MEMBER MARCH-LEUBA: No, but that's a
13 different transient. That's the one, we want to start
14 off when you open the valves, when you lose the
15 buttons. But you're taking credit for 24 hours.
16 MR. SCHMIDT: It's both scenarios. It's
17 about ECCS. You have to demonstrate that you'll meet
18 SAFDLs performance.
19 MEMBER CORRADINI: Right.
20 MEMBER MARCH-LEUBA: Okay. We'll agree
21 with you afterwards.
22 MEMBER SKILLMAN: Mike, since we're on
23 4.3, let me make my one comment.
24 Allyson, on your book, on your Design
25 Certification Application, it's page 4.3-4, at the

1 bottom of the page. And I'm just entering this into
2 the record as one member's comment. This is a
3 Subcommittee meeting.
4 This is where the potential for return to
5 criticality is identified, and it is effectively
6 dismissed by the argument that it's a 10-to-the-minus-
7 5 event. And that has been giving me, and I know
8 other members, some real heartburn.
9 Here are the words that are so important:
10 "Conservative analysis indicates a return to power
11 could occur following a trip under conditions that the
12 highest worth CRA does not insert coincident with the
13 CVCS being unavailable." And I would just offer that
14 that is, in part, the foundation of Dr. March-Leuba's
15 comment, my concern about the BAS's qualification, the
16 electrical power, the potential change you might
17 consider to have a direct injection of boron into the
18 module. But this, in my mind, since it is part of
19 your application, obligates a very strong defense.
20 Thank you.
21 MS. CALLAWAY: Understood.
22 That was the last slide, slide 4, Section
23 4.3. And so, I'll turn it over to Ken Rooks to
24 discuss Section 4.4.
25 MR. ROOKS: All right. So, for the 4.4,

1 for the core T-H design, we accepted acceptance
2 criteria that adhere to GDCs 10 and 12. These SAFDLs
3 pertaining to the core are critical heat flux and
4 maximum fuel temperature, which ensure that fuel and
5 cladding do not overheat. Safety limits corresponding
6 to these SAFDLs are placed in Section 2 of the tech
7 specs.
8 Core flow is another selected protective
9 parameter which influences the SAFDLs. And the
10 reactor coolant system flow is protected with LCO
11 3.4.1, which ensures the reactor coolant system
12 remains within the Safety Analysis basis.
13 MEMBER MARCH-LEUBA: Remind me, how is the
14 flow measured?
15 MR. ROOKS: It's continuously measured
16 ultrasonic flow --
17 MEMBER MARCH-LEUBA: Ultrasonic on the
18 down comer?
19 MR. ROOKS: Uh-hum. It's good.
20 And we meet GDC 12 with MPS limits that
21 are established to prevent the loss of riser sub-
22 cooling and maintain hydrodynamic stability.
23 MEMBER MARCH-LEUBA: So, how much
24 confidence do you have on the flow estimates that you
25 have now?

1 MR. ROOKS: Pretty high confidence. We've
2 got strong pressure drop measurements for our
3 biggest --
4 MEMBER MARCH-LEUBA: The core is not an
5 issue. I mean, we know how to monitor cores.
6 MR. ROOKS: Yes.
7 MEMBER MARCH-LEUBA: But my concern is the
8 turnaround, the additional components.
9 MR. ROOKS: We've applied appropriate
10 analytical uncertainties to those --
11 MEMBER MARCH-LEUBA: You have a very large
12 uncertainty margin there.
13 MR. ROOKS: Uh-hum.
14 MEMBER MARCH-LEUBA: But you feel
15 confident, and you have a tech spec that, if you're
16 outside those, you will have to re-analyze --
17 MR. ROOKS: We have confidence we've
18 appropriately bounded all of those uncertainties.
19 MEMBER MARCH-LEUBA: It's a very difficult
20 mission, and especially on low flows. But we are not
21 talking about after scram again. That calculation, I
22 really want to do it myself.
23 MR. ROOKS: Understood.
24 MEMBER CORRADINI: Can I ask a little bit
25 different question? You have a table -- it's in

1 Chapter 5, but it's thermal hydraulics --

2 MR. ROOKS: Yes.

3 MEMBER CORRADINI: -- so, I assume it's

4 allowable. You have the best estimate flow as a

5 function of power. So, are these sonic flow meters

6 accurate through the full range, dynamic range, of

7 what you expect to be the case? So that when you

8 measure, when you're actually doing startup testing,

9 you'll actually know as a function of power what your

10 flow is, because these are all calculational here?

11 MR. ROOKS: Yes, that's my understanding.

12 MEMBER CORRADINI: Okay. The second

13 question, if this is the right time, bypass flow.

14 MR. ROOKS: Yes, sir. So, we have bypass

15 flow calculation that's partially done, the best

16 estimate with a computational fluid dynamics analysis.

17 And currently, there's an open item that we're working

18 on answering. I don't want to discuss like how we're

19 resolving that issue.

20 MEMBER CORRADINI: That's fine, but it's

21 still open, yet to be responded to by you guys?

22 MR. ROOKS: That's correct.

23 MEMBER CORRADINI: Okay. All right. I

24 saw that in the SE, and I just wanted to make sure

25 where it's at.

1 MR. ROOKS: Yes, and we can talk more in
2 maybe the proprietary session.
3 MEMBER CORRADINI: Well, are we allowed to
4 talk about in the open session what your current
5 estimate is for bypass?
6 MR. ROOKS: Sure.
7 MEMBER CORRADINI: What is it?
8 MR. ROOKS: It's 8.5. That's total
9 bypass.
10 MEMBER CORRADINI: Okay.
11 MR. ROOKS: Uh-hum.
12 MS. CALLAWAY: And that's the bounding
13 high estimate --
14 MEMBER CORRADINI: Right, right. That's
15 what I thought.
16 MS. CALLAWAY: Yes.
17 MEMBER CORRADINI: I wrote down "9," but
18 I wasn't sure because there was an 8.-something and a
19 -- okay. Go ahead. Thank you.
20 MEMBER REMPE: So, could you elaborate
21 more of your module protection system analytical
22 limits that prevent loss of sub-cooling and its
23 stability? I think there is a flow rate or a water
24 height measurement involved and there's some flux
25 detectors that are involved. And what are the

instrumentation that's going to be used to detect any instabilities? And maybe even show a picture where it's placed, if there's a water level measurement and it's a DP cell.

MR. ROOKS: Well, the biggest thing, we preclude by design. So, we ensure our riser remains below, remains sub-cooled, so our RCS-to-hot measurement will indicate that we're maintaining sub-cooling. And that's -- I'd have to get back to you where that exact measurement is at.

MEMBER CORRADINI: Could you take that down, just so we circle back on that, please?

MR. ROOKS: Sure. All right.

So, presented here, we have some normal operation NuScale reactor design parameters that are important to the core. As you know, NuScale's lower-rated thermal power and average linear heat generation rate, even with conservative peaking at steady-state conditions, our peak fuel temperatures are well away from fuel melt safety limits, even considering thermal conductivity, degradation, and gad container.

The core average mass flux for the NuScale design is roughly one-fifth of the traditional four-loop PWR. Our core delta-T is higher, though, and it's roughly 100 degrees at rated conditions.

1 MEMBER CORRADINI: So, can I ask a
2 question there?
3 MR. ROOKS: Uh-hum.
4 MEMBER CORRADINI: The delta-T is larger,
5 but the exit sub-cooling looks similar to a typical P.
6 MR. ROOKS: That's correct.
7 MEMBER CORRADINI: Okay.
8 MR. ROOKS: Uh-hum. And with conservative
9 peaking and biases on our operating conditions, the
10 core average exit void fraction is zero, with a hot
11 channel quality of 5 percent.
12 MEMBER CORRADINI: Is that a best estimate
13 or is that a bound?
14 MR. ROOKS: That's a bounding.
15 MEMBER CORRADINI: Okay. What's the best
16 estimate? Are you allowed to say?
17 MR. ROOKS: I don't have the best -- yes,
18 I don't want to state the wrong answer.
19 MEMBER CORRADINI: That's fine. That's
20 fine. Thank you.
21 MR. ROOKS: So, for evaluating the core
22 T-H performance, the CHF and the fuel melting SAFDLs
23 are performed using the approved sub-channel analysis
24 methodology and the critical heat flux Topical
25 Reports. The rod ejection accident methodology

1 report, Topical Report, is currently in staff review.
2 NuScale uses the VIPRE sub-channel
3 analysis code to determine the reactor core flow and
4 enthalpy distribution, and evaluates CHF margin using
5 our NSP4 CHF correlation that is approved for the
6 NuFuelHTP2 fuel design.
7 We evaluate fuel temperatures using a peak
8 linear heat rate surrogate which uses reactor core
9 power and maximum peaking conditions.
10 And our RCS flow is driven by our density
11 gradient between the core and steam generator, and
12 it's influenced by the loop flow resistances, with the
13 majority being in the core and across the steam
14 generator tubes.
15 And we have tests that well characterize
16 the losses for each of those components and was used
17 to inform RCS flow that goes in the tech specs 3.1.
18 MEMBER SKILLMAN: What is the uncertainty,
19 if you will, for the core resistance and for the tube
20 bundle resistance?
21 MR. ROOKS: I'm not sure.
22 MEMBER SKILLMAN: The reason I ask is
23 because it seems to me that the very best you can do
24 on this plant -- and it's acceptable -- but the very
25 best you can do is a relative flow rate. I don't see

1 how you can get an absolute flow rate. And as I say
2 that, I will tell you, that was the B&W problem. B&W
3 could not get an absolute flow rate. That's why the
4 B&W loops had the Venturi, and the Venturi testing
5 failed. We could not get a C sub D that was constant
6 for the 15 to 100 percent power.
7 I see the same problem here. You can get
8 a very good relative flow, but I don't see how you can
9 get an absolute flow rate in mass pounds per hour.
10 You can predict something that's conservative, but I
11 don't see that you can get a true, accurate, absolute
12 flow rate because the uncertainties are so great, and
13 they're driven by variations in density, velocity, and
14 geometry.
15 So, I am assuming that the remedy is
16 sufficient uncertain embedded in the calculation.
17 MR. ROOKS: And I have confidence that
18 there is.
19 MEMBER SKILLMAN: Yes?
20 MR. ROOKS: Uh-hum.
21 MEMBER SKILLMAN: Is that what carries the
22 day for your flow rate?
23 MR. ROOKS: I think that's best to say,
24 correct.
25 MEMBER SKILLMAN: Okay. Fair enough.

1 MEMBER CORRADINI: Can I understand your
2 question? Are you talking core flow or sub-channel
3 flow?
4 MEMBER SKILLMAN: Core flow and sub-
5 channel flow.
6 MEMBER CORRADINI: Well, sub-channel flow,
7 they would have to back-calculate by their essential
8 analysis to determine their CHF ratios. But core
9 flow, I thought the sonic, the total down comer flow
10 would give that to you.
11 MEMBER SKILLMAN: Yes.
12 MEMBER CORRADINI: I misunderstand.
13 MEMBER SKILLMAN: But it's a relative flow
14 rate. It's not going to be absolute exactly pounds
15 per second or pounds per hour.
16 MEMBER MARCH-LEUBA: What you are
17 measuring is the speed of sound as it bounces back.
18 And then, you have to convert that to a velocity of
19 the flow.
20 MEMBER CORRADINI: But I thought they
21 would have a temperature measurement nearby the sonic
22 thing, or else they can't determine --
23 MEMBER MARCH-LEUBA: You need to have a
24 correction for the temperature. You have to have a
25 correction for the flow area. You have to have a

correction for uneven flow because it's a big down comer. And I haven't seen those.

MEMBER SKILLMAN: My comment is not intended to be pejorative. All I'm saying is you've got a very good relative flow rate device, but the question of whether or not it is an absolute flow-measuring device I would suggest is questionable. Therefore, you embed uncertainties in your calc to accommodate those unknowns. That's all I'm saying. It's not an absolute mass flow measurement device. Yet, it's a very good relative flow rate, mass flow rate, measuring device.

MR. SCHULTZ: So, Ken, you stated that you have confidence that the conservatisms that have been applied are sufficient to do the operating analysis and the safety analysis. And one of the things the Committee would be interested to see is what is the basis for that confidence in terms of your, if you will, better estimate, and then, the conservatisms that, in fact, are applied and how those results translate into the results of the analysis.

MR. ROOKS: So, we've taken into account tolerances on all the parameters, and we've used that to develop a percentage basis that we apply to our losses that we know.

1 MEMBER MARCH-LEUBA: Just for our peace of
2 mind, when you come back for the full Committee in
3 early May, can you give us what is the uncertainty you
4 have applied to the flow measurement?
5 MR. ROOKS: Okay.
6 MEMBER MARCH-LEUBA: Because I think you
7 put a lot of uncertainties on all your lost flow
8 coefficients, your pressure drops. If the number is
9 1 percent, Dick is going to complain seriously,
10 because even the Venturi doesn't get 1 percent.
11 MEMBER SKILLMAN: To me, the number is
12 interesting, but it's not vital. What is important is
13 whether or not the mass flow rate that they have
14 assumed can be defended. And it is a relative mass
15 flow rate, and whatever it is, it is. And if they can
16 establish that even mass flow rate for this plant heat
17 rate is protecting the SAFDLs, we're good to go.
18 MEMBER MARCH-LEUBA: As I said before --
19 MEMBER SKILLMAN: It's not a problem.
20 MEMBER MARCH-LEUBA: -- I don't have any
21 problem with the NuScale design because they have so
22 much margin, that they can make a 20 percent error and
23 still have so much margin.
24 MEMBER SKILLMAN: Yes.
25 MEMBER MARCH-LEUBA: It's a beautiful

1 design. I'm complaining about the paperwork all the
2 time. It's the paperwork. It's the homework.
3 MR. ROOKS: Can you repeat, though, what
4 you would like to see?
5 MEMBER MARCH-LEUBA: You have a range of
6 flows, minimum and maximum, on that table in Chapter
7 5, which I don't know the number. What percentage of
8 that range is due to the measurement of the flow? Or
9 it may not be included there.
10 MR. ROOKS: I'll take a stab. So, the
11 measurements we assume in our analyses are analytical.
12 So, we've applied geometry-based uncertainties to
13 those. But, then, the measurement that is
14 continuously measured will be accounted for in our LCO
15 341, where the flow is going to have to remain within
16 that range that's evaluated in the Safety Analysis.
17 MEMBER MARCH-LEUBA: The LCO, you need to
18 make sure that what this compares is the measured
19 value minus the uncertainty --
20 MR. ROOKS: That's correct.
21 MEMBER MARCH-LEUBA: -- or velocity,
22 depending on what --
23 MR. ROOKS: That is correct.
24 MEMBER MARCH-LEUBA: So, the uncertainty
25 on the measurement will be applied on the LCO level.

1 MR. ROOKS: That's right.

2 MEMBER MARCH-LEUBA: Let's hope you guys

3 remember to put it in there.

4 MR. ROOKS: Yes.

5 All right. So, here we have an

6 illustrative view of the implementation of our

7 approved sub-channel analysis methodology and how the

8 thermal margin stacks up for the NuScale reactor core.

9 So, our approved NSP4 safety limit is 1.21 with

10 uncertainties stacked, in accordance with the

11 methodology, to get an analysis limit of 1.284. And

12 as you can see, the limiting normal operation range

13 initial condition, critical heat flux ratio with

14 biases and uncertainties applies, is above 3, which

15 leaves plenty of room our non-LOCA transients that are

16 evaluated in Chapter 15.

17 And here is a map of the analytical

18 pressure and temperature operation limits for the

19 NuScale design. The green dashed line represents our

20 rated full-power temperature curve ranging from RCS

21 cold to RCS T-hot, with T-avg being maintained within

22 the box indicated with the black dashed line and the

23 blue line surrounding it. The span of this box covers

24 the range of initial conditions considered in Chapter

25 15, which is the Safety Analysis is demonstrated to

meet.

And the CHF and fuel temperature, those are protected for the NuScale design using the MPS lines, which are indicated in red, and the blue lines are protected with continuously-monitored LCO. LCO is in the tech specs.

MEMBER MARCH-LEUBA: And the yellow-orange slanted to the right, that's the stability scram, is that right?

MR. ROOKS: That's correct, yes. That's right.

MEMBER MARCH-LEUBA: The one that protects against everything?

MR. ROOKS: Correct.

MEMBER REMPE: So, is that the lower and upper limits, that's your range of uncertainty on those two lines? Because I don't see the --

MR. ROOKS: So, the red line is where the analytical trip is, and the orange is where we've designed some margin into it.

CO-CHAIR KIRCHNER: Which measurement do you use for that 5-degree margin? Is it right at the core exit or?

MR. ROOKS: That's the answer I needed to get back with Chairman Corradini, about where the RCS

T-hot is measured.

MEMBER CORRADINI: Thank you.

CO-CHAIR KIRCHNER: Just thinking about the sensitivity of that measurement, 5 degrees, I mean, it's the saturation. Your other curve is just the saturation temperature for the pressure. But you're trying to build in a 5-degree cushion to avoid getting into an instability because of flashing in the riser. How much sensitivity is built into that?

MR. ROOKS: So, the 5 degrees is offset to set the other analytical trips where you see the high-temperature vertical line. So, at 610, the 5-degrees off is -- we set those temperature analytical limits assuming a 5-degree margin.

And to get back to the RCS T-hot, it's measured at the top of the riser. That's where we take that.

MEMBER CORRADINI: I would expect that that's where you have a well-mixed stake, yes.

MR. ROOKS: That's correct.

MEMBER CORRADINI: Okay.

MEMBER REMPE: But you are going to get back to us about -- there's a water level measurement in the riser, too, right?

MR. ROOKS: I don't think --

1 MEMBER REMPE: There's not?
2 MR. ROOKS: Uh-uh.
3 MEMBER REMPE: Because they talk in some
4 of the documentation about the water level there.
5 MEMBER MARCH-LEUBA: During normal
6 operation, the water level is inside the pressurizer.
7 MEMBER REMPE: Right. So, there's a
8 measurement inside the pressurizer for the water
9 level?
10 MR. ROOKS: That's correct.
11 MEMBER REMPE: And that is -- you don't
12 know what kind of insert right now, or you'll get back
13 to us with that information?
14 MR. ROOKS: I don't think we have that.
15 MEMBER REMPE: So, you don't have it?
16 MR. ROOKS: I can look and be sure.
17 MEMBER MARCH-LEUBA: You don't have a
18 water level in the riser?
19 MR. ROOKS: We do. We have an instrument.
20 MEMBER MARCH-LEUBA: Instrument, yes.
21 MEMBER REMPE: And do you know what that
22 sensor is?
23 MR. ROOKS: I don't know specifically what
24 that sensor is.
25 MEMBER REMPE: Okay. Because, again, if

1 there's like a reference leg and those kind of
2 details, I'd be interested in hearing more about. But
3 you just will not specify until the COL applicant or
4 it's just not part of the DCA?
5 MR. ROOKS: I think that's correct.
6 MEMBER MARCH-LEUBA: Talking about that,
7 Mike is going to hate me, but I'm going back to my
8 favorite topic; that I think Chapter 15 is missing an
9 additional AOO, which is what happens after shutdown.
10 If you don't take care of this for makeup, as you cool
11 down, the water compresses, and then, the water level
12 drops, eventually drops below the riser when the flow
13 stops, at which point this deposition boils in the
14 core.
15 I know that that's not an analysis you do
16 on PWR, the present fleet, because they have pumps and
17 the operators are going to take credit for all of
18 that. But if we are going to say that, after we scram
19 -- actually, well, you didn't say it, but just from
20 doing this directly, the technician will lock the door
21 and go home. Have you an analysis of what happens
22 when you take the key of the technician, lock the
23 door, and go home? It's not in the FSAR.
24 MR. SCHMIDT: This is Jeff Schmidt from
25 the staff.

1 So, it's in 15.0.6. And when you see our
2 SE, you'll see it all described there. So, there is,
3 I would say, a unique section in this FSAR that I
4 think will address a lot of your concerns.
5 MEMBER CORRADINI: Or at least attempt to.
6 MR. SCHMIDT: Yes.
7 MEMBER CORRADINI: Okay. Let's keep on
8 going.
9 MEMBER MARCH-LEUBA: Wait, Mike.
10 MR. RAD: This is Zack Rad, Regulatory
11 Affairs for NuScale.
12 I just want to address this general
13 principle. When we say we don't take credit for
14 operator actions, that's not for normal operation.
15 So, for the normal shutdown and normal boration, we
16 absolutely will have operators operating the reactor
17 and those systems. But when we say we don't take
18 credit, that's for Chapter 15, AOOs and Accidents.
19 MEMBER MARCH-LEUBA: But all of them, you
20 stop them when you scram, and then, go full op.
21 MR. RAD: So, under normal circumstances,
22 if the reactor scrams, we don't evacuate the control
23 room. We assume that reactor operators are going to
24 do the things necessary to follow their procedures.
25 MEMBER MARCH-LEUBA: What I called out is

1 taking credit for those operator actions.

2 MR. RAD: Under normal conditions. So,

3 under accident or AOO conditions, the analysis assumes

4 no operator actions, right? So, there' two different

5 things. They're talking about practical operation of

6 the plant, and then, you're talking about the analysis

7 that's demonstrates in our applications. There's two

8 different things. So, I want to make sure that that's

9 clear, that we're not saying the operators are never

10 assumed to operate the plant equipment and boring.

11 And so, there's a differentiation we have

12 to make when we maintaining shutdown margins between

13 mode transitions or during normal operations. Yes, we

14 do take credit for operator actions during those

15 times, and we're not saying we don't credit operator

16 action during those timeframes. I just want to make

17 that clear.

18 MEMBER CORRADINI: In the interest of

19 time, I want to at least have the Applicant to get

20 through the rest of Chapter 4 before we go to Chapter

21 15.

22 MEMBER REMPE: But, before you stop on

23 that, with the water level measurement, even though

24 you don't specify the kind of sensor, I would like to

25 understand whatever you can provide on that, because,

again, that's something that's going to help with their reaction to any sort of instability, even though you're precluding it by your operational limits. And it may come into play for some of the accident analyses. And I want to understand if there is or is not going to be a reference leg that could be impacted and would need to be corrected for because of changes in pressure, is what I'm asking all these questions. So, can you get us something back before the full Committee meeting, because it will come back in other chapters? That's where I'm coming from.

MS. CALLAWAY: If we can follow up in the closed session, we will. And if we need some additional time, then we can follow up --

MEMBER REMPE: That would be great. Yes, at some point I would like to hear more about it. And it will come up again. Thank you.

MEMBER CORRADINI: Can we at least try to get through all of this in the next 10 minutes?

MR. LINIK: I think that's possible.

Control rod drive system materials. All of the materials are chosen in accordance with the application to which they're suited, in accordance with the ASME Code.

For pressure boundary materials, use

1 austenitic stainless steels. Non-pressure boundary
2 materials, use a range of stainless steels. We also
3 use a limited amount of cobalt materials. A typical
4 example would be the pin pivot for the actuator
5 grippers for the drive mechanism. And all of these
6 materials are consistent with existing mag jack
7 designs.
8 So, for the reactor internals and core
9 support materials, the same thing; all the materials
10 are chosen for their suitability and compatibility
11 with the environment. For components that see neutron
12 flux, we adhere to the EPRI Materials Reliability
13 Program criteria. And again, all components and
14 materials are consistent with existing designs.
15 The control rod drive system, it's a
16 typical mag jack design which you see in a typical
17 PWR. We have a unique addition. We have an added set
18 of coils for actuating essential remote disconnect
19 rod. I'll describe on a slide to come. And one of
20 the unique features is that our drive mechanisms
21 operate in a high-temperature vacuum.
22 CO-CHAIR KIRCHNER: Could you elaborate
23 there? When I looked at this, that struck me as the
24 point of departure with a past PWR control rod drive
25 actuator housing experience. Is there an

environmental qualification program for this aspect of the design?

MR. LINIK: Yes, there is. We have an EQ program for --

CO-CHAIR KIRCHNER: Just the mechanism, the basic mechanism, which I assume is very similar, except for you've got a cooling coil system, what temperature difference is this going to run at versus the existing fleet of PWRs and their CRDMs?

MR. LINIK: I don't have that off the top of my head, what the delta-T would be.

MEMBER CORRADINI: Are you looking for help?

MR. LINIK: Yes. H-Xu?

MEMBER CORRADINI: You're going to have to come to a microphone and identify yourself.

MR. XU: Hongqing Xu, Materials Engineer, NuScale.

As far as the operating temperatures, you know, our design is slightly higher. The design temperatures, I mean, it's much higher. I mean, it's like 650. But the operating temperature of the coil is higher than the typical PWR, which at peak I believe it is about no more than 350 for the coils, although the CRDMs, I mean, itself, for the mag jack

is around 550 Fahrenheit. Because we have a vacuum, we cannot put a coil with that, with the conventions of four coatings. So, we use the coated coil to coat the coils, to prevent exceeding the temperatures that would cause the failure of the coils.

CO-CHAIR KIRCHNER: Okay. Thank you.

CO-CHAIR BALLINGER: With respect to the last bullet, I'm going to caution you again, you are using materials which are defined by specifications. You are not using the material -- that hydrogen environment, your gas space, you need to be careful about that. There are materials, not 718 and not X750 and not A286, which will perform better. And you should think about that because the EPRI guidelines do allow -- there's another material.

MR. LINIK: We'll take that back and give it consideration.

Okay. Next slide.

So, again, we already talked about this. We have a slip-fit system for putting the cooling coils on the exterior of the mag jacks. If you have any questions? If not, we can move on.

MEMBER SKILLMAN: Larry, let me ask this question. Would you go back one slide, please? When Dr. Corradini was asking you some questions, I was

1 focused on your comment about the disconnect rod.
2 MR. LINIK: Yes.
3 MEMBER SKILLMAN: And here's why I'm
4 asking that question. It appears as though the
5 fingers that are used to engage the spider are
6 basically a preset spring. In other words, they have
7 mechanical hysteresis that causes them to want to be
8 open.
9 MR. LINIK: Correct.
10 MEMBER SKILLMAN: Correct, yes.
11 If, for any reason, you are -- when I say
12 "you," I don't mean you -- if, for any reason, the
13 licensee is not able to disconnect the rod, then the
14 refueling operation halts. What consideration is
15 given at the design stage to make sure that the
16 extension rod can be disconnected from the control
17 hub? I'm on your figure 4.6-6, which shows this
18 interaction. And when I was reviewing this material,
19 my thought was, what in the world do you do if the
20 preset spring force -- there, thank you for putting
21 that up -- if the preset spring force fails to
22 disengage?
23 MR. LINIK: I'm not aware. I know that
24 thought has been given to this very issue. And so, I
25 can't answer it at this point. We can get you the

information later, if you desire.

MEMBER SKILLMAN: Let's just leave it for the record. It just seems to me that this is a vulnerability. And it sounds like it's just something you might pass off to the next people who will deal with this. But if you cannot disconnect, you cannot take this machine apart.

MR. LINIK: I know this has been thought about and the solution has been at least agreed to internally. I don't know exactly what that is. That's beyond the scope of my purview in Chapter 4.

MR. NOEL: This is Derek Noel with NuScale, Component Design Supervisor.

I can you give a better answer for that. I believe we have a secondary method. The exact details of that are not exactly in my memory, but I can give you an answer to that this afternoon.

MEMBER SKILLMAN: So, your point is there's a backup, in case, there's a backup --

MR. NOEL: Yes, we have a manual release method.

MEMBER SKILLMAN: Where you can get down and grab that thing and compress the fingers?

MR. NOEL: I can look into that and get you the exact details of that by this afternoon, how

1 we would do that.

2 MEMBER SKILLMAN: Thank you.

3 Mike, this is not the question I was

4 asking --

5 MEMBER CORRADINI: Yes, I got --

6 MEMBER SKILLMAN: The question I was

7 asking was the extension rod in the steam space.

8 MEMBER CORRADINI: Right.

9 MEMBER SKILLMAN: But I think Walt raised

10 a good point. I know there are plans -- they've had

11 a lot of problems on cooling on the CRDMs, and it's

12 normally leakage of the cooling water and the jacket

13 issues. And because of the very high temperature that

14 the electrical device will be in at the top of this

15 column, this electrical configuration is an extremely

16 high temperature. So, its cooling is critical and its

17 insulation design is ultra-critical. So, those are

18 critical design features on this plant.

19 Thank you.

20 MR. LINIK: And so, going to the next one,

21 this is a basic description of how the remote

22 disconnect rod works. You start with the center

23 graphic. The two components are separated. The

24 central disconnect rod has been removed by actuation

25 of the magnetic coil. The bayonet with the fingers is

inserted to the CRA hub. The coil is disconnected. The rod drops, driving the fingers out to engage the CRA hub.

The reverse of that: the remote disconnect coil is engaged. The central disconnect rod is withdrawn. The hubs, as noted earlier, retract, and the shaft withdrawn.

Back to Matt.

MR. PRESSON: Yes. And with that, we are on the final couple of slides.

This right here simply is our COL item specifying what we're working with in DCA space and what we will work with with future customers if they're looking for those operations.

MEMBER REMPE: So, the only place I saw in Chapter 4 about load following was just that some codes had been applicable for load following. I didn't see anything other than base load. Is there someplace other in the DCA where you talk about non-base load operation? This one kind of surprised me.

MR. PRESSON: Yes, not in the DCA.

MR. LINIK: If I may add, our applicability Topical Report has a limitation that our methods are only allowed for base load operation.

MEMBER REMPE: Okay. I had forgotten

that.

MR. LINIK: So, that's been restricted.

MEMBER REMPE: Thank you.

MEMBER SKILLMAN: Is there consideration in NuScale to allow load following?

MR. LINIK: Absolutely. During the COL, we will submit a methodology for load following analysis.

MEMBER SKILLMAN: Okay. Thank you.

MR. PRESSON: And with that, we have our list of acronyms.

And that concludes the NuScale presentation.

MEMBER CORRADINI: The short list of acronyms.

(Laughter.)

MR. PRESSON: Yes.

MR. ROOKS: I'd like to add one more thing.

CO-CHAIR BALLINGER: Well, we have succeeded in getting ourselves --

MR. ROOKS: Excuse me. I'd like to add one more thing to answer Member Rempe's question, if I may.

So, the final sensor selection will be a

COL item, but, for the purposes of DCA, it's a guided wave radar measurement for the pressurizer level. So, it doesn't use a reference leg.

MEMBER REMPE: That's good to know. So, when you've said that, then, even though you'll select the type later, you will adhere to this? And that's somewhere I can find in some chapter that I've missed? Or where is that?

MR. ROOKS: I presume it's in Chapter 7.

MEMBER REMPE: Okay. It is? Thank you.

CO-CHAIR BALLINGER: Okay. Any questions?

MEMBER CORRADINI: You'll take a note as to where it is.

CO-CHAIR BALLINGER: So, if there are no other questions right now, we have again succeeded in getting ourselves behind, but I'm guessing that the closed session won't be as long as we might think or allow for.

So, let's recess until 10 minutes until.

(Whereupon, the above-entitled matter went off the record at 10:32 a.m. and resumed at 10:49 a.m.)

CO-CHAIR BALLINGER: Okay, we're back in session. And it's the Staff's time. And who's running the show?

1 MR. BAVOL: I'll get things started.
2 CO-CHAIR BALLINGER: Perfect.
3 MR. BAVOL: Okay. My name is Bruce Bavol,
4 I'm the project manager for the NuScale design
5 certification review. This is a Chapter 4 Reactor
6 Safety Evaluation with Open Item discussion.
7 We're going to be talking real quick, I'll
8 get through some of the logistics and then we'll jump
9 into Section 4.2. We've got six reviewers.
10 The first three will open up and then
11 we'll cycle through, through the second three
12 reviewers.
13 There's a list of the technical reviews in
14 that order. And the summary of the Staff's review.
15 This review is based on DCA Revision 1.
16 During the review, Staff has issued 16
17 RAIs. Question?
18 CO-CHAIR BALLINGER: No.
19 MR. BAVOL: Oh, I'm sorry. The safety
20 evaluation gained 14 open items and one confirmatory
21 item.
22 And NuScale has incorporated information
23 in Rev. 2. That was delivered to us in the Fall of
24 2018.
25 There is one request exemption, which will

be discussed. And to repeat, the ACRS Full Committee is scheduled for May 2nd.

There are the sections that we're going to be reviewing, 4.2, 4.3, 4.4 and then we'll switch technical reviewers, 4.5.1, 4.5.2 and 4.5.6.

And first up is 4.2, Chris Van Wert. I'll turn it over to you.

MR. VAN WERT: All right, thank you very much. So I will be presenting the Staff's review of Section 4.2, the fuel system design.

MEMBER MARCH-LEUBA: Move the little green light a little closer.

MR. VAN WERT: Oh, sorry.

MEMBER CORRADINI: You guys are all so shy.

MR. VAN WERT: Well, I was more afraid of bursting eardrums when I flip a page. I always get a nasty look every time I'm up here.

MEMBER CORRADINI: Yes, well, we don't have good IT.

(Laughter.)

MR. VAN WERT: Okay. So as you can see on this slide, and just summarizing the areas that we're looking at, design basis, the drawings, design evaluation itself, surveillance plans, ITAAC, COL

1 items and of course the exemption that Bruce already
2 mentioned.
3 I do want to stress that, as was mentioned
4 before, this review is not including the underlying
5 methodologies since those were approved. Framatome
6 methodologies nor the applicability's since that was
7 addressed last year in the topical report.
8 So, we're mostly focused on the actual
9 application of it and ensuring that they were
10 following the methodologies that they were
11 referencing.
12 Next slide. So, this is just a quick
13 summary. As belabored a little bit more in the
14 previous presentations, but the main difference is
15 that we were seeing in the NuScale fuel assembly
16 design compared to the AREVA HTP fuel assembly design
17 is the dimensions.
18 The shorter assembly. And in order to
19 accomplish that, they were using fewer grids, but they
20 were maintaining as close to possible the actual span.
21 That's a slightly smaller span.
22 The net effect of this is giving a stiffer
23 assembly that has a little bit more impact in the fuel
24 seismic structure evaluation part of 4.2.
25 Some NuScale operating parameters that

1 have some effect on our review, or on their analysis
2 in our review, is lower system pressure, flow rates
3 and then also lower temperatures.
4 Next one. So, a high-level summary of our
5 findings, we were able to review their design
6 evaluation, analyses as presented in the tech report
7 and confirmed that they met their SAFDLs associated
8 with the normal operations AOOs as presented in that
9 technical report.
10 However, at this time, since there is some
11 ongoing reviews associated with related sections, we
12 can't make findings on GDC 2, which is going to be
13 related to the fuel assembly structural response. And
14 I'll go into that in a little bit more detail.
15 And then the next two, GDC 27 and 35,
16 they're mostly just tied to other sections that are
17 making the bulk of the finding. So the GDC 27 is tied
18 to 15.0, or 15, and then GDC 35 is tied to Chapter 6.
19 Next slide.
20 MEMBER CORRADINI: Okay.
21 MR. VAN WERT: Yes.
22 MEMBER CORRADINI: Just for clarification.
23 Maybe those were the ones I was going to ask about.
24 It's tied to Chapter 6, I thought it was tied with the
25 open item --

1 MR. VAN WERT: ECCS for 35.

2 MEMBER CORRADINI: Oh, okay, fine. Excuse

3 me.

4 MR. VAN WERT: Yes.

5 MEMBER CORRADINI: Whether or not we need

6 actives, AC power.

7 MR. VAN WERT: That's an open RAI

8 associated with that, and so since the SRP 4.2 does

9 tie to GDC 35, and there is an open item for the

10 acceptance of PDC 35 and 6.3

11 MR. DRZEWIECKI: It's actually 15.0.6.

12 Yes.

13 MR. VAN WERT: Oh. Okay, I apologize.

14 MEMBER CORRADINI: Okay. All right, fine.

15 MR. VAN WERT: I missed one.

16 MEMBER CORRADINI: All right, I just

17 wanted to make sure that --

18 MR. VAN WERT: My apologies.

19 MEMBER CORRADINI: -- that my notes match

20 what you just said so I didn't get confused. So I'm

21 with you now.

22 MR. VAN WERT: Sorry I messed up.

23 MEMBER CORRADINI: Thank you very much.

24 No problem.

25 MR. VAN WERT: So, the one I wanted to go

1 into a little bit of detail here is the one associated
2 with the fuel size, fuel assembly structural response.
3 We have an open item associated with that and it's
4 kind of twofold.
5 The Staff's review had focused for a
6 little bit on the RFT location, the refueling flange
7 tool location, of the NuScale plant layout. There are
8 ongoing design evaluations going right now.
9 We're expecting to get RAI responses with
10 that revised design in late July, and we'll proceed
11 with the review at that point.
12 Simultaneous with that, there's also a
13 revision to the analysis in the operating bay
14 location, and that's coming in at the same time too.
15 So we'll be hitting that evaluation heavily in the
16 late summer here.
17 MEMBER MARCH-LEUBA: Do you have an open
18 item on the control rod seismic evaluation, which
19 they're still waiting to submit? Control rod.
20 See, I'm concerned about seismic, control
21 rods are very good --
22 MR. VAN WERT: Yes.
23 MEMBER MARCH-LEUBA: -- but it's a long
24 spaghetti that goes to the top of the pool. I'd like
25 to see how it responds on the large, or horizontal

1 lobe.

2 MR. VAN WERT: Right. I believe that's

3 the NEB, I forgot what section that, I'm trying to

4 look over here to get the section --

5 MR. SCHMIDT: Yes. This is Jeff Schmidt

6 from the Staff. I think that's in Chapter 3.

7 MR. VAN WERT: 3.9.

8 MR. SCHMIDT: We only deal with the fuel

9 seismic. The other internal components is dealt,

10 where I think in Chapter 3.

11 MEMBER MARCH-LEUBA: Okay. And --

12 MR. SCHMIDT: I'm not sure what section.

13 MEMBER MARCH-LEUBA: -- seismic PRA could

14 probably handle it too, right?

15 MR. VAN WERT: Right.

16 MEMBER CORRADINI: Chapter 19 is in mid-

17 May and Chapter 3 is mid-June.

18 MR. VAN WERT: So you will hear about it

19 then.

20 MEMBER MARCH-LEUBA: Well, we heard this

21 morning, earlier, that it's under production.

22 MR. VAN WERT: Oh.

23 MEMBER MARCH-LEUBA: Under construction.

24 MR. VAN WERT: Okay, well, okay.

25 MEMBER MARCH-LEUBA: Just make sure that

it doesn't fall through the cracks because it is a concern.

MR. VAN WERT: Yes. Yes.

MEMBER MARCH-LEUBA: Okay.

MR. VAN WERT: Any other questions on the, okay.

Next slide. So, I'll explain this really quickly. This is tied into the previous slide. I was trying to give you an overview, the plant layout, to show you where the RFT location was.

Unfortunately, the best picture in the DCA application is prop. So this is the only non-prop overview that I could find for you.

But it does give you an idea of where the operating bay locations are. And then there's two pink rectangles kind of near the middle right side. That's the CVT and RFT locations.

MEMBER MARCH-LEUBA: Now, can you point with the mouse please?

MR. VAN WERT: Bruce?

MEMBER MARCH-LEUBA: Or give him the mouse and he can point.

MR. VAN WERT: Yes, you can go down. Down, down, down. Those two.

So the top one is the CVT, the containment

1 vessel tool, and then the refueling flange tool is the
2 one on the bottom.
3 So, that was an unanalyzed condition.
4 Originally, they have been working on that now and
5 we'll get the results very soon.
6 Okay, and so this is just kind of
7 summarizing what I was saying before about there being
8 open items in 4.2 that are tied to evaluations that
9 are being performed elsewhere.
10 The exemption request that Bruce mentioned
11 before, this is kind of a standard one, for any of the
12 Framatome plants that are using M5, or Framatome
13 customers who are using M5. So they requested it and
14 we granted the exemption. I think that's it.
15 MR. BAVOL: Okay, that's the end of
16 Section 4.2. We'll move on to Section 4.3 if there
17 isn't any questions. Okay.
18 MR. DRZEWIECKI: Okay. I'm Tim
19 Drzewiecki. I looked at 4.3 and 4.4 which is a
20 Nuclear Design and Core Thermal-hydraulic Design.
21 What you see here, this is where we made
22 findings. And the items that are black, this is where
23 we still have open items.
24 And so, what I'll discuss here in this
25 slide, I'm going to focus on reactivity control, GDC

26, which I heard questions on that as far as how we made that finding, and then the open items.

I also have some other slides if you have some more questions on other areas, that we can go to in the closed session if needed.

MEMBER CORRADINI: But you anticipated us?

MR. DRZEWIECKI: A bit, yes. Okay, next slide.

All right. So this review was informed by several methodologies.

There is the nuclear analysis of codes and methods review, the sub-channel analysis review, which we've already spoken to you about. Those are approved methods.

The rod ejection methodology is still under review. There is a technical report, that's a fluence calculation methodology. There's also several methodologies that are discussed within the FSAR itself.

Okay. So these are something that was on a NuScale slide as well, just in terms of shutdown margin and long-term shutdown capability.

I do want to state that the way that you define a shutdown margin is very consistent with how it is done in the out fleet as well as passive PWRs.

1 The one thing that is different is here, moderator is
2 taken to be 420 degrees Fahrenheit.
3 This is typically done at a higher
4 temperature, at your hot zero power temperature.
5 That's usually around 540 in most, yes.
6 MEMBER REMPE: So, Tim?
7 MR. DRZEWIECKI: Yes.
8 MEMBER REMPE: I'm sorry, but could you
9 back up a slide just real quick?
10 MR. DRZEWIECKI: Sure.
11 MEMBER REMPE: I wasn't fast enough. The
12 fluence calculation methodology report, it's my
13 understanding Reg Guide 1.99 is being updated. Were
14 those updates considered in this evaluation?
15 I was going to bring it up in Chapter 5
16 but I just thought I'd give everyone a heads up.
17 MR. DRZEWIECKI: Yes, let me verify.
18 Because I think I based that finding, I don't think it
19 was 1.99.
20 MEMBER REMPE: Well, their methodology in
21 Chapter 5 references, quite often, 1.99.
22 CO-CHAIR BALLINGER: Make sure we're
23 careful about saying the word update. Reg Guide 1.99
24 is being reevaluated.
25 MEMBER REMPE: Okay.

1 CO-CHAIR BALLINGER: It may or may not be
2 updated, but there's a long process that's going to
3 happen.
4 MR. DRZEWIECKI: Okay.
5 MEMBER REMPE: Okay. So how will that,
6 that long process may still occur before they go
7 forward and so that's why --
8 CO-CHAIR BALLINGER: It's just completely
9 unpredictable in terms of time.
10 MEMBER REMPE: Okay. It was my
11 understanding it was a little more predictable, it's
12 being revised. Okay.
13 CO-CHAIR BALLINGER: We'll know a little
14 bit more in a month or so.
15 MEMBER REMPE: Probably, your answer did
16 not reflect any changes to --
17 MR. DRZEWIECKI: It did not, yes.
18 MEMBER REMPE: Okay.
19 MR. DRZEWIECKI: They had reference on the
20 one issued on March 2001.
21 MEMBER REMPE: Okay.
22 MR. DRZEWIECKI: And it's 1.90. Okay. So
23 --
24 MEMBER CORRADINI: So, just to make sure
25 I understand. The definition in the current fleet is

1 not that slow of a temperature, is that your point?
2 MR. DRZEWIECKI: That's right, yes.
3 MEMBER CORRADINI: Okay.
4 MR. DRZEWIECKI: It goes in the 540
5 usually. So, everything else is the same. And --
6 CO-CHAIR KIRCHNER: The K effective to go
7 with that is .98?
8 MR. DRZEWIECKI: Well, I mean, in this
9 case it's .99 I believe.
10 MEMBER MARCH-LEUBA: No.
11 MR. DRZEWIECKI: Well no, I'm sorry, it's
12 not that, no. There's not a K effective on this.
13 I'll show you on the next slide how that's calculated.
14 It's the margin because, they have a
15 required shutdown margin, and you're right, it's 2,000
16 pcm. So, yes, it's .98.
17 MEMBER MARCH-LEUBA: To stay, you have to
18 be less than .99.
19 MR. DRZEWIECKI: Yes.
20 MEMBER MARCH-LEUBA: And maybe become a
21 target to .98.
22 MR. DRZEWIECKI: Yes. Yes. Okay. And
23 then, you know, the sort of definition which is unique
24 to this design.
25 There's a long-term shutdown capability.

1 This assumes that all the rods are in but you only
2 take credit for things like your xenon, that's gone.
3 And you're at very cold temperatures.
4 MEMBER CORRADINI: So this is the one that
5 I guess one of the members quoted, and I went back.
6 So their assumption to show LTSD is xenon free, they
7 ignore the decay heat, they ignore voiding and they
8 take an equilibrium samarium concentration?
9 MR. DRZEWIECKI: Yes.
10 MEMBER CORRADINI: With no non-safety
11 systems credit.
12 MR. DRZEWIECKI: That's right. But this
13 is a state point calculation. And that might be more
14 clear on the next slide.
15 MEMBER CORRADINI: Okay, fine.
16 MR. DRZEWIECKI: Because that should be --
17 MEMBER CORRADINI: Thank you.
18 MR. DRZEWIECKI: Because this actually
19 shows some of the numbers. Can you go to the next
20 slide?
21 MR. BAVOL: Sure.
22 MR. DRZEWIECKI: All right. So you can
23 see on the left, that's a shutdown margin calculation,
24 and on the right that's a long-term shutdown
25 capability calculation.

1 MEMBER MARCH-LEUBA: This is the table
2 that is on the --
3 MR. DRZEWIECKI: That's right.
4 MEMBER MARCH-LEUBA: -- SER, right?
5 MR. DRZEWIECKI: That's, yes. It's an
6 SER. And --
7 MEMBER CORRADINI: I'm sorry, this is the
8 one you were referring to, right?
9 MEMBER MARCH-LEUBA: This is 4.4, this is
10 4.3-3.
11 MEMBER CORRADINI: Okay, thank you.
12 MR. DRZEWIECKI: Yes.
13 MEMBER MARCH-LEUBA: The one on the left
14 and the one on the right is, 4.3-4 I think.
15 MR. DRZEWIECKI: Yes, I think that's
16 right.
17 Yes, so, side-by-side, things that are
18 different, if you look at item 1c on the left, that's
19 got the stuck rod accounted for. And then if you go
20 to long-term capability, items 2c and d, you know,
21 that's if you get the moderator cooling pass 420 down
22 to a very cold temperature. I think they used the 40
23 degrees Fahrenheit here. And the xenon as well.
24 MEMBER MARCH-LEUBA: What is the
25 temperature, assume you were pursuing an actuation,

1 what is the temperature on the LTSD?

2 MR. DRZEWIECKI: These were calculated

3 down at 40 degrees Fahrenheit.

4 MEMBER MARCH-LEUBA: That is 40 degrees

5 inside the core?

6 MR. DRZEWIECKI: Yes.

7 MEMBER MARCH-LEUBA: And on both of them,

8 the defect, that includes, what, boron?

9 I mean, top layer plus moderator to 420,

10 is that correct?

11 MR. DRZEWIECKI: That's right. Yes,

12 that's cool down from there.

13 MEMBER MARCH-LEUBA: And this calculation

14 will simulate, so --

15 MR. DRZEWIECKI: Yes.

16 MEMBER MARCH-LEUBA: -- it doesn't have to

17 bother with the PCM, the moderator temperature

18 coefficient, which is very --

19 MR. DRZEWIECKI: That's right. That's

20 right. Okay.

21 MEMBER MARCH-LEUBA: We were talking about

22 the axial redistribution for boron in the top. They

23 estimate 7 pcm at the end of cycle is the impact, so

24 it's very small.

25 MR. DRZEWIECKI: Yes. Okay. Okay, so, as

1 far as making a finding in GDC 26, all right, so this
2 is a capability of the systems and redundancy. And
3 so, it's got four items to make findings on.
4 One is that you have two systems. An
5 equality of two systems. They have their rods and
6 they have a CVCS system.
7 Now, and then the second item goes into
8 what the rods have to be capable of doing.
9 And, yes, so that has to base, you know,
10 so, they have to be capable of changing in the power
11 such that under normal operations, and AOOs and with
12 margin for stuck rods, you don't violate SAFDLs.
13 So, the way that they define shutdown
14 margin, it includes a stuck rod. So, if you get the
15 rods in, and in rapidly, then you will be shutdown.
16 At least right away.
17 Now, there are other findings to make on
18 this in terms of the overall system response. So, I
19 can't say that that alone means they need SAFDLs. But
20 I think it's adequate at the show of the core design
21 meets 26.
22 MEMBER CORRADINI: So, this is where I am,
23 this is where I get confused, so can you just, I want
24 you to kind of say it again so I at least, I'm not as
25 fast as Jose on this.

1 So, the way I read this is that, under
2 normal conditions, GDC 26 is satisfied, your still,
3 the case is open for GDC 27 based on the related
4 Chapter 15 analysis. Is that a proper way of stating
5 it or an improper way?
6 MR. DRZEWIECKI: I think, so, the finding
7 that I'm making here is that you can shut down the
8 reacting. That's the finding that I'm making on 26.
9 MEMBER CORRADINI: Okay.
10 MR. DRZEWIECKI: Instantaneous shutdown.
11 MEMBER CORRADINI: Okay.
12 MR. DRZEWIECKI: Hold down, that's 27.
13 MEMBER CORRADINI: Okay.
14 MR. DRZEWIECKI: That's what we're looking
15 at in GDC 27. Yes. And that's Chapter 15.
16 MEMBER MARCH-LEUBA: My concern is, the
17 way I read safe shutdown in 10 CFR 50, is the plant
18 gets to choose how they will run the plant after
19 shutdown.
20 And they can choose a hot temperature or
21 a cold temperature. Okay. And then they have to
22 analyze based on what they choose to do.
23 It feels to me that what they're doing is
24 they are not necessarily picking the most convenient
25 temperature and then telling the plant, you figure out

1 how to do it. Because there is an awful lot of
2 actions and devices and structures and components that
3 need to be available to keep the temperature above
4 420.
5 This reactor does not want to stay hot.
6 And I don't see that analysis anywhere.
7 MR. DRZEWIECKI: Okay. Yes, so, part of
8 that is informed by the analysis for the exemptions,
9 I'm sorry, supporting the exemption for GDC 27.
10 That's in 15.0.6. That's an open item still. So we
11 have questions on those analyses.
12 It's really associated with what's the
13 acceptance criteria that have to be meet in order to
14 grant that exemption. And there are three.
15 Ones are the risk, one is that you can't
16 violate SAFDLs on the return of power, and the third
17 is about the frequency of this event. It should not
18 happen during their life of a module.
19 MEMBER CORRADINI: Of?
20 MR. DRZEWIECKI: The plant.
21 MEMBER CORRADINI: Yes.
22 MR. DRZEWIECKI: The plant. Yes, that's
23 a good point. Yes. It's a factor of ten.
24 MEMBER CORRADINI: So let me just state.
25 I think I think now, I didn't understand where Jose

1 was going before but I think I do.

2 I think his, I'm going to restate his

3 concern. His concern is that there is an implicit

4 number of operator actions under normal shutdown

5 that's anticipated, which is fine, but it's not

6 documented.

7 Am I misunderstanding you?

8 MEMBER MARCH-LEUBA: It's certainly not

9 documented.

10 MEMBER CORRADINI: But am I close?

11 MEMBER MARCH-LEUBA: You're close. But

12 what my concern is that I keep hearing, everywhere on

13 the CDA and everywhere in the presentation, that we

14 don't create operator actions, we don't credit any of

15 these components.

16 But the implicitly credited part --

17 (Off microphone comment.)

18 MEMBER CORRADINI: Right. But my

19 interpretation of what Tim has said to us is that for

20 GDC 26, which is, I'll call it instantaneous shutdown,

21 there are normal operator actions and normal

22 assumptions about what's on, what's off.

23 For long term shutdown, which is GDC 27,

24 the case is open and being analyze by Staff with RAIs

25 going back and forth.

1 MR. DRZEWIECKI: That's right. That's
2 right.
3 MEMBER CORRADINI: That's what I'm
4 hearing.
5 MR. DRZEWIECKI: Yes.
6 CO-CHAIR KIRCHNER: And then your
7 definition of instantaneous shutdown is what?
8 That there has to be some qualifying,
9 quantifying analysis to demonstrate that the K
10 effective is less than one.
11 MR. DRZEWIECKI: Yes.
12 CO-CHAIR KIRCHNER: So would we say .98 or
13 --
14 MR. DRZEWIECKI: Yes, it's .98. That's
15 what I was showing on the previous slide.
16 CO-CHAIR KIRCHNER: All right. So, in the
17 Applicant's safety analysis report, Table 4.3-2, they
18 show that they would need 240 ppm boron for safe
19 shutdown. But at end of cycle they're running with
20 only five or, five to 20 ppm.
21 So, how do they get to safe shutdown with
22 a stuck rod?
23 MR. DRZEWIECKI: I expect that that
24 analysis does not take credit for the xenon which is
25 there. Where the instantaneous one does.

1 I don't know if NuScale wants to clarify
2 more.
3 CO-CHAIR KIRCHNER: Okay.
4 MR. DRZEWIECKI: Okay.
5 CO-CHAIR KIRCHNER: It says no xenon, so
6 --
7 MR. DRZEWIECKI: Yes.
8 CO-CHAIR KIRCHNER: -- so that's the delta
9 and you've checked that?
10 MR. DRZEWIECKI: Yes, that's a delta.
11 Well, I didn't audit calculations, but just looking at
12 these numbers here I can infer that, because if you
13 look at the margin that I have, it's 4,000 there.
14 So, okay, if I go to EOC --
15 CO-CHAIR KIRCHNER: Yes.
16 MR. DRZEWIECKI: -- and it's 2,600 and the
17 xenon worth is 2,500 --
18 CO-CHAIR KIRCHNER: With the xenon.
19 MR. DRZEWIECKI: Yes.
20 CO-CHAIR KIRCHNER: Okay, thank you.
21 MR. DRZEWIECKI: Yes. Okay. So this is
22 Slide 18.
23 Okay. So then, the -- okay, so the third
24 item, 426, is the CVCS, or their second system. That
25 control changes in reactivity such that you don't

1 violate that fuel design limits.

2 And the CVCS is used to maintain the CRAs

3 within the PDILs. Which is going to preserve shutdown

4 margin. And the maximum amount of reactivity addition

5 is evaluated within Chapter 15.

6 And then the last item is that one of

7 these systems shall be capable of holding the reactor

8 in a cold shutdown state.

9 And so, for this case, both the CVCS and

10 the CRAs can hold you in a cold shutdown state. CRAs

11 with all rods in, based on how they define long-term

12 shutdown capability within a CVCS. Because you can

13 borate right up to whatever you have to borate up to.

14 MEMBER MARCH-LEUBA: We keep talking of

15 CVCS but we're, there are 12 CVCS and you can actually

16 model from one to the other and back up one model, but

17 there's only BAS. I wonder about that a little bit.

18 There's only one boron relation system.

19 There is multiple CVCS, there are 12 CVCSs and you

20 actually crossed item to the wrong module.

21 MR. DRZEWIECKI: Yes. Well, so in terms

22 of the amount of boron that they maintain onsite, so

23 they can inject through the CVCS, there was language

24 in the safety evaluation for that that basically says,

25 they have enough of the shutdown, all 12 units.

1 MEMBER MARCH-LEUBA: And you've seen some
2 assumptions about how much the burnout is?
3 I mean, you cannot put all of them at
4 2,000 --
5 MR. DRZEWIECKI: Yes. Okay. Okay. Okay,
6 so now the open items.
7 GDC 12, this is stability, for the most
8 part. They did do xenon stability analyses. We had
9 no issues with those. Obviously, it's a very small
10 core, that was not a problem for them.
11 However, there is a stability of analysis
12 methodology, which we really reviewed in 4.4. But
13 that's still under Staff review, so that's an open
14 item.
15 Then there is GDC 27. This is what we're
16 talking about a lot today. And this is the fact that
17 they took an exemption from GDC 27 that's in a review.
18 It's being evaluated at 15.0.6 of the Staff safety
19 evaluation.
20 The acceptance criteria for that, those
21 are called out in the SECY paper, SECY-18-099. We had
22 briefed you guys on in the past.
23 There are questions currently on that
24 analysis in terms of the thermal margin that they do,
25 as well as the whole model of the way that's

evaluated. As well as the probability of occurrence or frequency of occurrence. So, two RAIs out on that.

MEMBER CORRADINI: Well, all of these responses are nonproprietary, as far as I can tell, is that correct?

MR. DRZEWIECKI: I believe so.

MEMBER CORRADINI: Okay.

MR. DRZEWIECKI: I believe so.

MEMBER CORRADINI: Thank you.

MR. DRZEWIECKI: Jeff, can you clarify these --

MEMBER CORRADINI: The ones at least --

MR. DRZEWIECKI: -- RAI responses?

MEMBER CORRADINI: The ones at least you guys name here are all available.

MR. DRZEWIECKI: Okay, I believe so.

MEMBER MARCH-LEUBA: You have to be careful, many RAI responses are ECI.

MEMBER CORRADINI: All of them are labeled nonproprietary by NuScale.

MEMBER MARCH-LEUBA: All of them are labeled.

MR. DRZEWIECKI: Okay. Yes. And then there is one other item and that's the boron redistribution during long term cooling. That's also

1 keeping this open.

2 Okay. All right, GDC 28 reactivity

3 limits. The rod ejection methodology is still under

4 review so I can't make a finding on that.

5 As well as the boron distribution problem

6 again.

7 MEMBER MARCH-LEUBA: Can you go back on

8 the boron distribution?

9 MR. DRZEWIECKI: What's that?

10 MEMBER MARCH-LEUBA: Previous slide, boron

11 distribution.

12 MR. DRZEWIECKI: Yes.

13 MEMBER MARCH-LEUBA: One of the concerns

14 that have, and we haven't got into LOCA yet, but when

15 you start burping steam from the top of the vessel and

16 condensing on the vessel and return it to ECCS, you're

17 basically distilling water.

18 So the water in the containment is still

19 water, no boron. Which then goes into the down comer

20 and then can move into the core as distilled water.

21 Or certainly reduced boron.

22 Is that what you mean by boron

23 distribution?

24 MR. BAVOL: Yes.

25 MR. DRZEWIECKI: That's right. Yes, that

it.

MEMBER CORRADINI: Yes, I think this one we're going to have to go into closed session since that is, if we're going to ask detailed questions about this one, we better do it in closed session.

MR. DRZEWIECKI: Yes. I'll be limited in how much I can say here because this part is still under review.

MEMBER CORRADINI: Yes.

MEMBER MARCH-LEUBA: Yes. Another concern I have with boron, and I wrote you guys a white paper on this is, when you are to a very low flow, the boron, a cold weight of water is very heavy --

MR. DRZEWIECKI: Yes.

MEMBER MARCH-LEUBA: -- it does not mix with the primary. Have you guys ever weighed anything on that or you just say we don't need it?

MR. DRZEWIECKI: So, I have some slides to actually address some of those questions. That's my backup slide.

But I think that the answer is that, if you are going to go into a layup or a post-accident recovery type scenario and go to a cold shutdown, you're going to add so much water that you're going to flood up effectively. So you should have a high boron

concentration there.

Also, where it injects, I think is important. Because --

MEMBER MARCH-LEUBA: I think it's on the top.

MR. DRZEWIECKI: Yes, it is on top. Okay.

The next slide please. Okay --

MEMBER SKILLMAN: Tim, before you go to 4.4.

MR. DRZEWIECKI: Yes.

MEMBER SKILLMAN: In 4.3, in your safety evaluation, let me get the citations so I'm accurate. This is on the, this is more proprietary.

MR. DRZEWIECKI: Okay. We can go to closed session, that's not a problem. I mean, after this.

MEMBER CORRADINI: They're probably stay --

MR. DRZEWIECKI: Well, that being said, if it's in the safety evaluation, everything should be non-prop in the safety evaluation.

MR. BAVOL: That's correct.

MEMBER SKILLMAN: This is the safety evaluation.

MR. DRZEWIECKI: Yes.

1 MEMBER SKILLMAN: Let me read the
2 statement that is in the safety evaluation, and then
3 please counsel me. Here is the statement. Is on Page
4 4-14 of your safety evaluation. It is the top
5 paragraph.
6 The loss of CRA worth resulting from the
7 depletion of the absorbent material is negligible.
8 MR. DRZEWIECKI: Yes.
9 MEMBER SKILLMAN: A conservative
10 calculation of a CRA lifetime of over 20 electric full
11 power years demonstrates less than two percent of the
12 boron in the upper portion when the CRA is lost
13 because of depletion.
14 Here's the question. If I look at the
15 NuScale document and I look at your safety evaluation,
16 there isn't anything that tells me the rods are
17 changed after 20 years. So I'm assuming these are 60
18 year rods.
19 And on that basis, if I've lost six
20 percent, excuse me, two percent over 20 years, do I
21 loss six percent over 60 years?
22 In other words, do I have a linear
23 reduction in the control rod worth, and if so, do we
24 have a, year 59, 364 days and 23 hour problem?
25 MR. DRZEWIECKI: Okay.

1 MEMBER SKILLMAN: That's the question.

2 MR. DRZEWIECKI: Yes. So, all right. So,

3 on the lot, so, as far as the basis -- okay, so we did

4 an audit as part of this review, so we had looked at

5 these calculations. Let's look at the basis for those

6 numbers.

7 And what we, so what we have pulled from

8 that is that they don't expect that it's the worth of

9 depletion that is going to be a limit on the lifetime

10 of these rods. That's their other affects you have to

11 consider.

12 Now, that being said, if the statement is

13 that you didn't see anything in here inside of the

14 safety, inside of the FSAR that would limit on its

15 burn-up to 20 years, then that's something I can take

16 an action on. I believe that there was. But if there

17 is not, I can verify that.

18 MEMBER SKILLMAN: I searched lifetime in

19 their FSAR.

20 MR. DRZEWIECKI: Yes.

21 MEMBER SKILLMAN: And it shows up several

22 times but not with relation to the rod.

23 MR. DRZEWIECKI: Okay.

24 MEMBER SKILLMAN: It shows up with

25 relation to fuel assembly. To me it's a curiosity

1 question.

2 MR. DRZEWIECKI: Yes.

3 MEMBER SKILLMAN: It's a, are we flirting

4 with a rod whose worth diminishes way out in the

5 future, but we haven't analyzed it as we should.

6 MR. DRZEWIECKI: Yes.

7 MEMBER SKILLMAN: That's what's going

8 through my mind.

9 MR. DRZEWIECKI: Yes. Yes, I'll say, as

10 far as the scope of this review, I was focused on 20

11 years. But I can take a look at that.

12 MEMBER CORRADINI: Can we get back to, and

13 just clarify?

14 MR. DRZEWIECKI: Yes, yes, yes.

15 MEMBER CORRADINI: If you would please.

16 MR. DRZEWIECKI: Absolutely. No problem.

17 No problem.

18 MEMBER SKILLMAN: It's because of the 20

19 years that is embedded in your safety evaluation. And

20 it's there several times.

21 MR. DRZEWIECKI: Yes.

22 MEMBER SKILLMAN: That the 20 years

23 doesn't show up over in the FSAR.

24 MR. DRZEWIECKI: Okay.

25 MEMBER SKILLMAN: Thank you. All right.

1 MR. BAVOL: I also wanted to, this is
2 Bruce Bavol. The copy of the safety evaluation, when
3 it was marked proprietary, was still undergoing
4 NuScale review for proprietary information. It has
5 since come back, Phase 2, in its current form, as
6 nonproprietary. And those ML numbers are available
7 with Mike.
8 MEMBER SKILLMAN: Okay. Thank you, Bruce.
9 MEMBER REMPE: So, yes, we would like to
10 see a copy of that just before the full committee
11 meets. The nonproprietary version. It makes
12 everything easier. Thank you.
13 MR. DRZEWIECKI: Okay. So, as far as the
14 findings that we made in 4.4, GDC 10, GDC 12 as well
15 as one OTMI action items. The ones in bold, 10 and
16 12, are still open.
17 So this review was informed, again, by
18 several methodologies. There's a CHF methodology that
19 was reviewed, sub-channel analysis methodology, the
20 non-LOCA analysis methodology as well as stability.
21 And of course, non-LOCA and stability are still under
22 review.
23 MEMBER MARCH-LEUBA: Sorry, no LOCA or
24 LOCA?
25 MEMBER CORRADINI: No, what you heard,

1 non-LOCA is still under review.

2 MR. DRZEWIECKI: Yes, non-LOCA. Okay, so,

3 all right, so what I'll go over here are some of the

4 unique features of this design.

5 And one is that there is no thermal margin

6 trip. So most PWRs do have a thermal margin trip.

7 This is like OP Delta T in Westinghouse plants or a

8 DNBR trip that you would see in like a CE plant.

9 And so, in their safety analysis they have

10 shown they don't need this type of a trip. For what

11 it's worth, this type of a trip is usually used for

12 like a smaller slow moving reactivity insertion.

13 There is no LCO for the heat flux hot

14 channel factor. This is something that is usually set

15 by your LOCA analyses. Their LOCA methodology does

16 not use this of course.

17 The response to LOCA is very different

18 from what you see against the goal PWR. So this was

19 not used so it did not trip those criteria to be an

20 LCO.

21 And then there is the flow monitoring.

22 And of course, there's the four sets of ultrasonic

23 transducers. And these of course are calibrated

24 against the heat balance.

25 MEMBER SKILLMAN: I need to correct the

1 record, I made a mistake. The 20 year is in Chapter
2 4 for the CRA lifetime.
3 MR. DRZEWIECKI: Okay.
4 MEMBER SKILLMAN: So, NuScale has
5 identified that.
6 MR. DRZEWIECKI: Okay.
7 MEMBER SKILLMAN: I was incorrect. So,
8 let the record show that there is that 20 year limit
9 in there.
10 And that I would ask the question on the
11 record, is that a, if you describe lifetime of a
12 component, which is why I asked the question.
13 MR. DRZEWIECKI: Okay.
14 MEMBER SKILLMAN: Okay, thank you.
15 MR. DRZEWIECKI: Okay, so then as far as
16 the open items, looking on the GDC 10 is the question
17 of the bypass flow rate.
18 So, the way it is verified now is by a CFD
19 analysis. And that showed that they had margin to
20 eight and a half percent and a nine percent, those at
21 lower powers, but the Staff wanted further
22 justification.
23 In the form of either having a startup
24 test or showing that you have lots of margin to the
25 acceptance criteria by some kind of a conservative

1 analysis.

2 MEMBER CORRADINI: This is memory for

3 other design certifications. That's a, a startup test

4 is a typical requirement that I remember.

5 MR. DRZEWIECKI: Okay.

6 MEMBER CORRADINI: For other

7 certifications that we've gone through. Because we've

8 asked this bypass question before.

9 MR. DRZEWIECKI: Yes. Yes.

10 MEMBER MARCH-LEUBA: But it might be

11 probabilistic to don't have as much margin. They

12 might take a --

13 MEMBER CORRADINI: Excuse me?

14 MEMBER MARCH-LEUBA: They might take a

15 penalty of margin and not have to do it. I mean, take

16 a penalty on your bypass flow and say, assume I'm over

17 200 percent, what will happen.

18 MR. DRZEWIECKI: Yes. Yes. But some of

19 the older plants it looked like they had actually done

20 some, a scaled modeling in the past. Like a long time

21 ago. Like CE did. I think BMW did too.

22 MEMBER CORRADINI: Okay.

23 MR. DRZEWIECKI: Okay. So, of course

24 there is a non-LOCA methodology which is under review.

25 This is, okay, this provides all the input

1 for the sub-channel analysis. It also selects what
2 other sub-channel, what other sub-channel of analysis
3 that you're going to do. So that's an open item.
4 And then there was a question in terms, as
5 far as the impact on the RCS flow. At first there was
6 not a tech spec to have a surveillance in RCS flow,
7 that was added.
8 It's done. When you're coming up out of
9 an outage, just to verify that what you have assumed
10 for the flow resistance in your safety analysis is
11 going to be, is bounding.
12 However, there was some concerns that this
13 could also have an impact based on secondary side
14 perturbations for the actual power shape. Because
15 that could have an effect on what your thermal centers
16 are.
17 But, anyways, there's been a first
18 response to this that basically those affects are
19 going to be analyzed and they'll be included, just on
20 the uncertainty for the flow resistance. So we're
21 just awaiting for, to get a FSAR markup for that.
22 MEMBER CORRADINI: So, can I say it back
23 to you another way?
24 MR. DRZEWIECKI: Yes.
25 MEMBER CORRADINI: I didn't understand

1 this one, at least from what I, so your point is, due
2 to the secondary site perturbations that would change
3 essentially the buoyancy driven part of the pressure
4 equation, they're going to do some calculations to try
5 to bound that to show that their bounded by these
6 modifications, by these perturbations.
7 So if I cool it differently I might change
8 the effective H this way or that way?
9 MR. DRZEWIECKI: That's right.
10 MEMBER CORRADINI: Okay.
11 MR. DRZEWIECKI: That's right.
12 MEMBER CORRADINI: Okay.
13 MR. DRZEWIECKI: That's right. And
14 they're going to do it in a way such that the current
15 surveillance is going to cover that.
16 MEMBER CORRADINI: And, again, here, okay,
17 fine. All right. Okay.
18 MR. DRZEWIECKI: Any other, okay. Okay.
19 So, for GDC 12 they describe the method to meet GDC 12
20 is to have a regional exclusion solution. And that's
21 described in this methodology, which is under review.
22 But I think we'll be speaking to you about that in
23 June.
24 MEMBER MARCH-LEUBA: Is there any issue
25 with that review or is everything on track to get the

CR on time?

MR. BAVOL: Stability topical report, safety evaluation is on track. It's currently going through concurrences right now, and it's delivered. So it should be given to you a month ahead of time, just like everything else.

MR. DRZEWIECKI: Okay.

MEMBER CORRADINI: And when there's silence, don't wait.

MR. BAVOL: Okay.

MR. DRZEWIECKI: Okay.

(Laughter.)

MR. BAVOL: With that we're going to switch out to the next three technical reviewers. 4.5-1, 4.5-2 and 4.6. Okay, John, whenever you're ready.

MR. HONCHARIK: All right. My name is John Honcharik and I reviewed the control rod drive materials.

Powering is the regulations that relate to the DCA information for the control rod drive structural materials. They include GDC 1, quality of standards. Also 14, reactor coolant pressure boundary, 26 and also 10 CFR 50.55a for codes and standards.

Next slide. The review guidance that was used for a control rod drive structural materials included the SRP for 4.5-1.

Also, the Reg Guide for 1.31, control of ferrite content in stainless steel weld metal, Reg Guide 1.44 for sensitized stainless steel, and also ASME NQA 1 for cleaning in addition to the ASME code, Section III for the materials and construction of the CRD.

Basically, the Staff reviewed materials for the CRD system to perform both reactor coolant pressure boundary functions and non-pressure boundary functions. The reactor coolant pressure boundary CRD components are constructed to Section III of the ASME code and quality Group A, or Class 1.

Materials basically consisted of austenitic stainless and martensitic austenitic stainless, which have satisfactory operating experience. Particularly the 304LN that was used here and also the L grade fill metal.

The associated non-reactor coolant pressure boundary fluid line, such as the CRD heat exchanger and associated components are also constructed in Section III of the code using quality Group B, or Class 2.

1 Next slide. The non-pressure boundary of
2 the CRD components are fabricated from material that
3 will assure that they function reliably to meet the
4 requirements of GDC 26.
5 The design and fabrication meets the
6 guidance of Reg Guide 1.31 for controlling the delta
7 ferrite to prevent micro fissuring, the Reg Guide 1.44
8 for minimizing sensitization of the stainless, and the
9 ASME code and select materials minimize the impact of
10 degradation such as stress corrosion crack.
11 MEMBER SKILLMAN: John, what consideration
12 did the Staff give to the control rods that are in the
13 steam space in the pressurizer?
14 This is unique for PWR --
15 MR. HONCHARIK: Right.
16 MEMBER SKILLMAN: -- these are not under
17 water --
18 MR. HONCHARIK: Right.
19 MEMBER SKILLMAN: -- these are bathed in
20 steam for potentially long periods of time. What
21 consideration do you give to that distinctive
22 difference?
23 MR. HONCHARIK: Yes. Some of the areas
24 have steam or nitrogen. With the nitrogen it's a
25 little bit better because its inert.

1 But with the stainless steel, especially
2 the pressure boundary parts of it, it is a 304LN.
3 It's very, it's low carbon but it also has a nitrogen
4 stabilizer.
5 Those have very good experience for PWRs,
6 and also EWRs in that case. So, I mean, when you look
7 at all those things together with past experience from
8 other materials and operating plants, I think you can
9 use that information to make a suggestion, a good
10 correlation that it would be very similar to that.
11 So, we did look at that, and also with the
12 X750. Part of it was with the, I guess there was an
13 IN-82-29. Primarily because we asked the RAI about
14 that.
15 And that was more on the lines of, there
16 were cracking problems that they found in the pins and
17 such that were used in Westinghouse and other plants.
18 And those were due to not having the right heat
19 treatment.
20 And that basically was below, it was about
21 1,800 or so. So anything above 2,000 that had a
22 solution kneeling at 2,000 or above did not experience
23 any cracking.
24 So basically, we asked that question. And
25 part of it was that they provided information in the

RAI response that had listing of what those potential ones. And each one of those had a solution in kneeling at least the 2,000 degrees Fahrenheit.

MEMBER SKILLMAN: So the control rod drive extensions, the long pieces, the spaghetti that Dr. March-Leuba talks about --

MR. HONCHARIK: Right.

MEMBER SKILLMAN: -- are fabricated of materials that are above the 2,000 Fahrenheit that you were talking about?

MEMBER CORRADINI: That's stainless steel.

MR. HONCHARIK: Yes.

MEMBER SKILLMAN: I'm asking the question.

MR. HONCHARIK: Yes, it's stainless, right. In the stainless steel part --

MEMBER SKILLMAN: I'm talking about the rod.

MR. HONCHARIK: Right.

MEMBER SKILLMAN: It's as big as your wrist and it's 30 to 40 feet long.

MR. HONCHARIK: Right.

MEMBER SKILLMAN: That's the piece I'm talking about.

MR. HONCHARIK: Yes. Okay. And that's basically stainless.

1 MEMBER SKILLMAN: Yes, I got that. And
2 what's different in this reactor is, it's in the steam
3 space. And if it's in the 24 month fuel cycle, it
4 sits up there for 695 or 700 days at TSAT for the
5 pressurizer.
6 And in that environment, whatever,
7 whatever is in that steam environment, is bathing the
8 outside diameter of those control rods. Of the
9 extensions.
10 MR. HONCHARIK: Right.
11 MEMBER SKILLMAN: So, that's the question
12 I'm asking. What consideration did you give to that?
13 MR. HONCHARIK: Well, the consideration
14 was that, even within that steam environment --
15 MEMBER SKILLMAN: It's A-Okay?
16 MR. HONCHARIK: Right. Because it's
17 similar to other plants. I mean, there are other
18 plants that have, say, BWR that has stainless steel in
19 there, in the steam space.
20 MEMBER SKILLMAN: Okay, thank you.
21 MR. HONCHARIK: So we did look at those
22 aspects for it.
23 CO-CHAIR BALLINGER: But the split-pin
24 problem in Westinghouse plants, that was a so called
25 AH heat treatment. They went to something called HPH,

1 which is the high temperature heat treatment.
2 The spring temper has not been used that
3 often.
4 MR. HONCHARIK: Right.
5 CO-CHAIR BALLINGER: So that was my
6 concern in the original question. The spring temper.
7 And you're in a hydrogen environment.
8 MR. HONCHARIK: Right. But the, right,
9 but the part that was a solution in kneeling that
10 wasn't done correctly. So the tempering part is
11 another aspect of it, which I don't think introduced
12 any problems with the stress corrosion cracking.
13 CO-CHAIR BALLINGER: We get into the
14 minutia --
15 MR. HONCHARIK: Yes.
16 CO-CHAIR BALLINGER: -- about gamma prime
17 on the boundaries and all that kind of stuff.
18 MR. HONCHARIK: Right.
19 CO-CHAIR BALLINGER: But the spring temper
20 is sometimes problematic with that kind of thing. But
21 in an hydrogen environment, you need to be careful.
22 MR. HONCHARIK: Right.
23 MEMBER SKILLMAN: So, just so you don't
24 think I'm sleeping at the switch, so you've said, hey,
25 the boilers have this stuff up in steam too, which of

1 the boilers has boric acid up there? And hydrogen.
2 I'm not trying to be an antagonist, I'm
3 just saying, that's different in this design, and
4 those extensions --
5 MR. HONCHARIK: Right.
6 MEMBER SKILLMAN: -- are critical for the
7 safe design of this plant. So, was it really looked
8 at?
9 MR. HONCHARIK: Well, I think from our
10 point of view I think we've looked at it based on what
11 was provided and with the guidance that we had. I
12 mean, I can look at it more and get back with you on
13 that.
14 MEMBER SKILLMAN: No, I'm not asking for
15 that. If you say you're convinced that the review by
16 the Staff was thorough, comprehensive, then I'm
17 satisfied. That's really what I'm going after.
18 CO-CHAIR KIRCHNER: What, if any, of the
19 latching mechanism is exposed to that environment?
20 MR. HONCHARIK: The latching mechanism?
21 CO-CHAIR KIRCHNER: Yes. Or is that all
22 outside the pressure boundary?
23 MR. HONCHARIK: That's inside of it.
24 CO-CHAIR KIRCHNER: Yes.
25 MR. HONCHARIK: Yes. So those --

1 CO-CHAIR KIRCHNER: So the latching
2 mechanism is exposed to this steam boron environment,
3 isn't it?
4 MR. HONCHARIK: No.
5 CO-CHAIR KIRCHNER: No? It's outside?
6 MR. HONCHARIK: Yes. It's inside of it.
7 So, the steam is on the outside. Okay.
8 Next slide. There was also ITAACs. Part
9 of the review was looking at the ITAACs for the
10 pressure boundary of the CRD materials. And that's in
11 the DCA and Part 2, Tier 1.
12 And the ITAACs provide their acquired
13 information that verifies that the as-built reactor
14 and coolant pressure boundary CRD assemblies will be
15 designed, constructed, inspected and testing in
16 accordance with Section III of the ASME code. And
17 there were no other COL information items related to
18 this stuff.
19 Next two slides of the presentation. Any
20 questions?
21 CO-CHAIR BALLINGER: Five second rule.
22 MR. HONCHARIK: Thank you.
23 MR. WIDREVITZ: Hello, my name is Dan
24 Widrevitz and I conducted the review of Section 4.5.2,
25 Reactor Internal Core Support Structure Materials.

1 This section really was concerned with the
2 internals. And sort of the take home message here is,
3 the internals for NuScale are much simpler but
4 otherwise highly consistent with precedent in terms of
5 materials and fabrication considerations.
6 A lot of the things you just heard for
7 4.5.1 control rod, that counts here as well, through
8 Section III, the reg guides, limiting sensitization
9 materials.
10 So, in terms of familiar aspects, the
11 overall design, sort of neutron flux, the material is
12 very familiar and consistent with precedent.
13 Compliance with the ASME code and citation of
14 relevant, reg guide is very consistent.
15 The unique aspects, I think these as sort
16 of in a positive vein. The unique aspect is a much
17 simpler package then what we see in large lights.
18 And also, they applied the materials
19 reliability program 227 criteria, to analyze for
20 degradation mechanisms within the internals. That's
21 a project that was put together, essentially for
22 license renewal. And for the operating fleet that's
23 looking at a lot of expert solicitation, drawing
24 together our operating experience, looking at what
25 might occur and where within internals packages for

1 the various steels and application.

2 So the result of that is there's a couple

3 of additional visual examinations for internal VT1's

4 and VT3's. But otherwise, I was certainly very

5 satisfied with this section. If you have any

6 questions?

7 MR. BAVOL: Okay. Ryan?

8 MR. NOLAN: Yes, thanks. The purpose of

9 the Staff's review, in this area, is to confirm that

10 the control rod drive system can reliable control

11 reactivity and respond with an acceptable limits

12 during AOOs and prevent, or mitigate the consequence

13 of postulated accidents.

14 The Staff's review focused on the

15 functional performance of the CRDS.

16 The normal function of the control rod

17 drive system is to support the control rod assemblies

18 by latching, holding and maneuvering the CRAs.

19 And then the safety related function of

20 the system is to release the CRAs into the core during

21 a reactor trip and then maintain RCS pressure valves.

22 With respect to environmental seismic

23 qualifications, the system is designed to the 2,100

24 PSIG and design temperature of 650 degrees Fahrenheit

25 of the RCS. As well as the boron concentration of

1,000 ppm.

The Staff reviewed the cooling water system to ensure that it meets the design requirements. And for this design the CRDMs rely on water cooling from the reactor component cooling water system. And that system is designed to maintain the CRDMs below 256 degrees.

The Staff audited the Applicants FMEA to confirm that no single failure in the system could prevent a reactor trip and that the ability to rapidly insert the CRAs on command was retained.

The Applicant does have a prototype testing program that was developed to integrate the CRDM and the other components to demonstrate acceptable mechanical functioning. The test include drop times, misalignment testing and wear susceptibility.

That's going to be presented again to you when we present the mechanical components of this system. That's part of 3.9.4.

There is also initial, system is part of initial test program and it verifies the operating coils, as well as the design meets the requirements for insertion withdrawal and drop times.

There are tech specs which do periodically

do partial movement of the system and ensure that there is acceptable alignment. As well as drop time testing surveillance as part of tech specs.

Can you go to the next slide please?

MEMBER MARCH-LEUBA: Sorry. How often are those surveillances?

MR. NOLAN: I'm not --

MEMBER MARCH-LEUBA: Tell me it's not once every two years?

MR. NOLAN: I can't recall off the top of my head. Right now, it just made point to a testing program. I'm not too sure.

MEMBER MARCH-LEUBA: So, my main concern was controllers with these very large actuation is misalignment that would bind, that would be a common cause failure.

MR. NOLAN: Yes, and the expectation is that their tested prior to startup, as well as any time the reactor trips they're supposed to verify --

MEMBER MARCH-LEUBA: Once every two years.

MR. NOLAN: Three years?

MEMBER MARCH-LEUBA: Once every two years. Once a cycle.

MR. NOLAN: Well, you're not going to test the drop times.

1 MEMBER MARCH-LEUBA: You can do one at a
2 time.
3 MR. NOLAN: Yes.
4 MEMBER MARCH-LEUBA: If you're concerned
5 about it. So how do I know they remain aligned every
6 two years?
7 MR. NOLAN: Oh, you're talking about the
8 alignment test?
9 MEMBER MARCH-LEUBA: Yes.
10 MR. NOLAN: That's periodic.
11 MEMBER MARCH-LEUBA: You obviously align
12 them. How do they remained align? So, they
13 withdrawal, they won't bind.
14 MR. NOLAN: Yes, so there's surveillances
15 including in the tech specs for that, but I don't know
16 if the frequency is specified yet.
17 MEMBER CORRADINI: So, just to be clear,
18 so, it's there but the frequency is yet to be
19 determined?
20 MR. NOLAN: Yes. And I don't have the
21 specs for it.
22 MEMBER CORRADINI: That's fine. But I
23 just want make sure you're answering.
24 MEMBER MARCH-LEUBA: I'm just saying that
25 it's hard to do unless you re-drop the rod and make

sure it goes in. I mean, it's doable, but you put in 5,000 pcm unless you really want to.

MEMBER SKILLMAN: In the all plants I've been associated with, after you refuel you do flight time testing.

MEMBER CORRADINI: Right.

MEMBER SKILLMAN: So it's a surveillance after every refueling that confirms the alignment and that the core has been --

MEMBER CORRADINI: Right. But to circle back, somehow I'm sensing he wants it more often.

MEMBER MARCH-LEUBA: I'm asking, how confident you are that it will work --

MEMBER SKILLMAN: Once per cycle is normally the, but it's a definitive answer.

MEMBER SUNSERI: But tech specs normally, at least the PWRs that I'm familiar with, require control rod exercise testing monthly.

MR. NOLAN: My gut feeling is, right now the spec points to a --

MEMBER SUNSERI: Annual.

MR. NOLAN: -- no, just a program. And I don't know is if we have that information right now.

MEMBER SKILLMAN: Ryan, let me ask you this. The question is aimed at the design

requirements for the CRDS cooling system.

MR. NOLAN: Okay.

MEMBER SKILLMAN: What is the failure mode of mag jack on loss of cooling?

MR. NOLAN: So, when we reviewed the thermos and effects analysis, one thing that we ensured is if you do lose the cooling it does not affect the safety related function of the system.

And so the normal operation function could definitely be affected. However, the ability to release was not affected.

MEMBER SKILLMAN: Thank you.

MR. NOLAN: Yes. So, in conclusion, the Staff found that the control rod drive system meets the GDC shown on the slides for a number of reason. The design qualification on the physical protection of this system, it provides a reliable assurance that it will remain functional and it will safely shutdown the reactor under adverse environmental conditions after postulated accidents.

This system fails in a safe condition and that it is designed to address a single malfunction of the system. And will not result in exceeding the SAFDLs.

And the exception to this are the open

1 items pointed here that were previous discussed
2 associated with GDC 27 and the long-term cooling boron
3 redistribution issue.
4 CO-CHAIR BALLINGER: Okay, are there any
5 other questions from the Members for now? If not,
6 then we should go to public comments.
7 So, with respect, is there anybody in the
8 room that would like to make a public comment?
9 And by then I'm assuming we're getting the
10 phone line open. Somehow will be notified.
11 Is there anybody on the public line? Can
12 we tell if the line is open?
13 Is there anybody on the public line?
14 Marvin was there earlier.
15 I don't know what blue and red means when
16 that things lights.
17 MEMBER CORRADINI: Blue is on.
18 CO-CHAIR BALLINGER: Yes. So --
19 MEMBER CORRADINI: So, nobody is there.
20 CO-CHAIR BALLINGER: -- Marvin or Sarah,
21 are you there? Okay.
22 MEMBER CORRADINI: So, assuming that we
23 don't have public comment, do the Members want to go
24 in close session for additional questions for either
25 NuScale or the Staff?

I'll just go around. Charlie, do you have any other questions?

MEMBER BROWN: No.

(Off microphone comments.)

MEMBER CORRADINI: Really? Okay.

CO-CHAIR BALLINGER: Well, in that case --

MEMBER CORRADINI: So, let me suggest something. My suggestion is, and if anybody were out there, they could hear us, that we're allowed to start earlier. So my proposal is we start at 1 o'clock, not at 1:30. If that's all right with NuScale and the Staff that you can move up your folks?

MR. BAVOL: Yes, that would be fine.

MEMBER CORRADINI: Okay. And we'll being on Chapter 5 at 1 o'clock.

MR. BAVOL: Okay.

CO-CHAIR BALLINGER: We're in recess until 1 o'clock.

(Whereupon, the above-entitled matter went off the record at 11:49 a.m. and resumed at 12:58 p.m.)

CO-CHAIR KIRCHNER: Let's reconvene, and we'll move on to Chapter 5, Reactor Coolant System, and we'll start with NuScale. And Carrie, are you going to be leading? Please.

1 MS. FOSAAEN: Good afternoon, Carrie
2 Fosaaen, NuScale Licensing Supervisor for Chapter 5.
3 So today we'll be presenting what we feel are the
4 unique aspects of Chapter 5, and I'll go ahead and let
5 my team here introduce themselves.
6 MR. SEXTON: This is Colin Sexton, I'm a
7 chemical engineer.
8 MR. NOEL: This is Derek Noel, I'm the
9 Component and Design Supervisor for NSSS.
10 MR. XU: I'm Hongqing Xu, HQ Xu, NuScale
11 Power, I'm a material engineer.
12 MR. SEXTON: Okay, I'm going to go through
13 the start of Chapter 5 here, which is an introduction.
14 This is the reactor coolant system and connected
15 systems. So we're going to jump into 5.1, which is
16 kind of a high level description with a few pieces of
17 information about the system.
18 So first off, NuScale is of course an
19 integrated, pressurized water reactor, meaning that
20 the RCS is kind of synonymous with the RPV to some
21 extent.
22 And what we see here in this figure is
23 that the RCS components are the reactor vessel, this
24 is really the bulk of the RCS. The integrated
25 pressurizer, which is of course part of the reactor

vessel. The reactor vessel internals, which direct the flow, that's the riser, the core barrel, the reflector, things like that that move the hot leg and cold leg and make sure that you keep the hot water in the center from the cold water in the annulus.

Then we've got our reactor safety valves, which are overpressure protection for the system. And we've got some RCS pipes that convey fluid from the reactor pressure vessel to the support systems located outside containment. Those are also components of the reactor coolant system.

So we're going to go into each of these items and walk through them. Some more summary information here. We're not going to dive into the details here. You're probably familiar with several of them.

One item that I'd like to point out is that the hot leg volume and the cold leg volume are about the same, which makes it so when you talk about the average coolant temperature, it's basically right in between the cold leg and the hot leg temperature, when you consider the density of the RCS as a whole. Because the volume of cold water and the volume of hot water, it's similar.

MEMBER CORRADINI: Let me make sure I add

all this up right. So you define the hot leg as the core exit all the way to the entry to the steam generator?

MR. SEXTON: That's right.

MEMBER CORRADINI: And the cold leg is defined as the exit of the steam generator back into the, entering the core below the, in the lower plenum.

MR. SEXTON: That's correct.

MEMBER CORRADINI: Okay, and what -- and okay, fine, got it. Thank you.

MEMBER MARCH-LEUBA: Since we're wasting time, do you mind clicking the mouse and you can point at it. Can you go back to the slide 4, the previous one.

MR. SEXTON: Yeah.

MEMBER MARCH-LEUBA: Okay, can you point where the top of the hot leg is, what we call the top of the riser? So wherever the level drops below there, you don't have natural separation anymore?

MR. SEXTON: Yeah, so this figure doesn't have a lot of detail right in that region, but the top of the riser stops right where the top of this figure is, the top of the mouse here. And then just a couple feet above that is the baffle plate, so.

MEMBER MARCH-LEUBA: Two feet below the

1 baffle.

2 MR. SEXTON: I don't have the exact

3 figure, but yeah, one to two feet below the baffle

4 plate.

5 MEMBER MARCH-LEUBA: And if the level ever

6 drops below there, you don't have natural separation

7 anymore?

8 MR. SEXTON: Yeah, that's correct. We

9 have a DHRS cooling slide at the end that kind of

10 talks about that a little bit.

11 MEMBER MARCH-LEUBA: Keep going.

12 MR. SEXTON: And it's a feature of the

13 flow when it gets cold.

14 MEMBER MARCH-LEUBA: I just wanted to

15 know, because it's not very well drawn anywhere.

16 MR. SEXTON: Right.

17 MEMBER CORRADINI: So to ask his question

18 a different way, how much does the hot leg volume,

19 because this picture is actually, it's pretty good.

20 So is it the core baffle plate that defines the

21 difference between the pressurizer and the hot leg?

22 MR. SEXTON: It's not the core baffle

23 plate, it's just the baffle plate.

24 MEMBER CORRADINI: The baffle plate.

25 MR. SEXTON: And it defines the difference

1 between the pressurizer and the circulating RCS
2 coolant.
3 MEMBER CORRADINI: That's the definite.
4 MR. SEXTON: Now, they're both part of the
5 RCS.
6 MEMBER CORRADINI: Yeah, sure, I'm with
7 you.
8 MR. SEXTON: But the baffle plate is the,
9 you know, big, solid structure that only has a few
10 holes cut in it to allow a pressure conveyance between
11 the circulating RCS and the pressurizer.
12 MEMBER CORRADINI: Okay, thank you.
13 MR. NOEL: While we're on this slide,
14 another function of the reactor vessel internals, if
15 we could point out with the mouse, are the in the
16 risers, the intermediate supports for the long control
17 rod drive shafts are shown in this image where you can
18 see that while the shafts themselves are fairly long,
19 there are intermediate supports in the internals so
20 it's not, the full length is not unsupported.
21 MEMBER MARCH-LEUBA: Which probably makes
22 it worse for a seismic. But you do have to, when you
23 put flimsy things next to big, heavy things, bad
24 things can happen too. So you have to make sure you
25 analyze it proper.

MR. SEXTON: Yeah, we just wanted to point out here, you know, these kind of light lines across, those are the CRDS supports.

MEMBER MARCH-LEUBA: So those are the, like the supports.

MR. SEXTON: Yeah, they span the riser and, you know, have holes for the control rod drive shafts to pass through.

MEMBER MARCH-LEUBA: Thank you.

MEMBER SKILLMAN: Colin, on that slide, why is, go back, forward one, please. Why is the reactor coolant system design pressure 2100 PSIG, and CVCS 2250 PSIG? Why is there a 150 PSIG difference between those two?

MR. SEXTON: I believe that's because the CVCS components are at a low elevation, but I'm not quite sure about that. And it's, the design pressure of the RCS as a whole is 2100 PSIA. Oh, sorry, we have our staff in Corvallis telling us that the shutoff head of the CVCS pump is higher than the RCS can achieve.

MEMBER CORRADINI: I know where he's going. He's worried about pumping into something at a higher pressure than the shutoff head. So you're pumping into a region where you could over-pressurize,

1 that's what I think you're worried about.

2 MEMBER SKILLMAN: That's where I'm going.

3 MR. SEXTON: Can you say that again?

4 MEMBER SKILLMAN: Sure. You've got a high

5 pressure CVCS pump, and you have a reactor coolant

6 system design pressure that is 150 PSIG below that.

7 So my real question isn't why isn't RCS designed at

8 2250. Or why isn't CVS designed for 2100?

9 MR. SEXTON: The RCS has overpressure

10 protection that keeps it below 2100 PSI in the form of

11 the reactor safety valves. The CVCS doesn't have that

12 protection locally where the shutoff head could occur,

13 so it has to have a design, higher design pressure in

14 that region.

15 MEMBER SKILLMAN: Believe me, you do not

16 want to lift your safety valves.

17 MR. SEXTON: No, we do not.

18 MEMBER SKILLMAN: I've made my point. Let

19 me ask one other question. On your RSVs for your

20 safety valves, are they relief valves or safety

21 valves? Do they have a blow-down ring?

22 MR. SEXTON: They are pilot-operated

23 relief valves. And the name of them is the reactor

24 safety valves. So that --

25 MEMBER SKILLMAN: So they really are not,

1 for instance, a dresser valve for the blow-down ring
2 and an inside set of, if you will, blading to achieve
3 a 5 or 10 or 15% blow-down. They're simply pilot-
4 operated.
5 MR. SEXTON: Pilot-operated, yup. So
6 there's a fluid control chamber with a pilot.
7 MEMBER SKILLMAN: I've seen the diagram,
8 I understand. Thank you, all right.
9 MEMBER MARCH-LEUBA: They are different
10 from the RVV, correct?
11 MR. SEXTON: That's correct. Totally
12 separate valve with separate functions.
13 MEMBER MARCH-LEUBA: And their relative
14 sizes?
15 MR. SEXTON: The RSVs are a two by three
16 valve, two-inch by three-inch valve. And the RVVs are
17 five-inch valves. So the RVVs are substantially
18 larger than the RSVs. And there's three reactor vent
19 valves, two reactor safety valves.
20 MEMBER MARCH-LEUBA: Which have part of
21 the ECCS system, right?
22 MR. SEXTON: The RVVs, the reactor vent
23 valves, are components of the emergency core cooling
24 system.
25 MEMBER MARCH-LEUBA: Only the RSVs take in

1 the credit for the ASME code.

2 MR. SEXTON: That's correct, they are

3 exclusively credited for overpressure protection of

4 the RSS.

5 MEMBER MARCH-LEUBA: RVV would not work

6 because of the IAB would --

7 MR. SEXTON: That's the right, the IAB

8 blocks operation of the vent valve at high pressures.

9 MEMBER SKILLMAN: Since you got input from

10 the your Corvallis team, you have information of the

11 what, what the pressure is. What is the real why?

12 Why is CVCS 150 higher? Does it need that to achieve

13 some function performance requirement?

14 MR. SEXTON: We can wait for them to reply

15 to that and get back to you on it. I believe the

16 reason --

17 MEMBER SKILLMAN: I would like to know

18 that.

19 MR. SEXTON: Okay, well, we'll wait for

20 them to type up a response and bring it back up when

21 it comes through.

22 MEMBER SKILLMAN: Thank you.

23 MR. SNODDERLY: This is Mike Snodderly.

24 Yes, they can also get on the bridge line and we can

25 mute it.

1 MR. SEXTON: Sure, we'll give them a
2 little time, if that's all right, to work through it.
3 Okay, moving on. So, the summary section
4 of 5.1 also has some information about flow and
5 temperature. So we're going to look at a couple plots
6 here and just talk through the high points. The first
7 upper plot is temperature of the hot leg/cold leg and
8 the average temperature, which as we said, due to the
9 volumes being similar, is right in between the hot leg
10 and cold leg temperatures over the range of reactor
11 power.
12 And the key thing to note here is that
13 between zero and 15% reactor power, we bring up the
14 temperature. And then from 15% on to 100%, we hold a
15 constant average temperature. We've got a few dots in
16 there for a maximum and minimum flow and what those do
17 to temperature.
18 So you know, temperature and flow are
19 connected in a natural circulation design. And if the
20 hydraulic losses are lower or higher, you're going to
21 have different high hot and cold temperatures as a
22 result of that.
23 CO-CHAIR KIRCHNER: Now, this heat-up
24 curve that you're showing, is this for equilibrium
25 fuel cycle? Is it decay heat that gets you up to your

1 operating conditions? Or is it heating the
2 pressurizer?
3 MR. SEXTON: This is a plot from zero to
4 100% power, so this is post-criticality. You know,
5 this is when the reactor is on.
6 CO-CHAIR KIRCHNER: Okay, so it's post-
7 critical. All right, so you ---
8 MEMBER CORRADINI: But I thought he was
9 going somewhere. At zero power, the aux boiler heats
10 enough up to cause a buoyancy flow. Is that not
11 correct, if I remember correctly?
12 MR. SEXTON: That's correct. So if you're
13 talking about the sequence where we get ready to go
14 critical, you know, come up from refueling to --
15 MEMBER CORRADINI: Yeah, I thought that's
16 where it was going.
17 MR. SEXTON: Yeah, we have what's called
18 the module heat-up system, which adds some hot water
19 to the riser and initiates some flow. In the lower
20 graph, you can see that the primary flow doesn't
21 terminate at zero, and that's because we have the
22 capability with a support system, that module heat-up
23 system, to generate about 70 kilograms per second of
24 flow in the primary loop.
25 CO-CHAIR KIRCHNER: So you bring the

1 system up to 420 after refueling, or initial start-up,
2 with the module heat-up system. And then you switch
3 over at that point once you're at 420.
4 MR. SEXTON: Yeah, that's correct.
5 CO-CHAIR KIRCHNER: Okay, thank you.
6 MEMBER MARCH-LEUBA: Maybe now is the time
7 to, because I don't see any other figures about the
8 feed water system. It's very difficult to control
9 feed water under one, two percent floor level with a
10 big valve. Do you have a parallel valve, a small
11 valve in parallel? Or do you have only one big valve?
12 MR. SEXTON: Yeah, I can't recall the
13 design of the feed water reg valve arrangement right
14 now.
15 MEMBER MARCH-LEUBA: I don't see it
16 anywhere. And I don't see how, that's what I've been
17 saying all morning, I don't see how you can control
18 the flow.
19 MR. SEXTON: Uh huh, at low flows.
20 MEMBER MARCH-LEUBA: At one percent flow
21 without it.
22 MR. SEXTON: It's the same staff that are
23 looking into that other issue, so we could --
24 MEMBER MARCH-LEUBA: Honestly, if it
25 doesn't have it, it's missing it. You need it.

1 MR. SEXTON: Right, low feed water flow
2 control. Yeah, I know we have worked on that
3 extensively, and we have our --
4 MEMBER MARCH-LEUBA: So if the guys are
5 working on it, it'd be nice to know that we have one.
6 MR. SEXTON: Okay.
7 MEMBER MARCH-LEUBA: That will take many
8 of my concerns.
9 MEMBER BLEY: You know, the brings up we
10 don't have an actual set of real PNIDs. We have the
11 cartoons that are in the SAR. Is there a set of real
12 PNIDs that staff has and we would have access to?
13 MR. SEXTON: The staff has audited the
14 design documentation.
15 MEMBER BLEY: But they don't actually have
16 them.
17 MR. SEXTON: The detailed PNIDs and
18 drawings for all the components are not on the docket.
19 MS. FOSAAEN: So the staff has access to
20 them via part of their review. But they're aren't
21 something that the staff actually has possession of or
22 something that would be typical to be submitted. So
23 they exist.
24 MEMBER BLEY: Well, it would be typical.
25 It's not in this case.

1 MEMBER SKILLMAN: I'd like to make a
2 comment on this figure, please. The figure that you
3 show is consistent with your table 5.1-2. But the
4 text on page 5.1-5 of your Chapter 5 FSAR has the
5 following words: The full power average coolant
6 temperature is higher for higher primary coolant flow
7 conditions and lower for lower primary coolant flow
8 conditions.
9 MR. SEXTON: Yeah, that's correct. So I
10 can clarify that.
11 MEMBER SKILLMAN: Needs to be clarified.
12 MR. SEXTON: Yeah, the full power hot leg
13 temperature is a controlled constant, regardless of
14 the flow of the reactor. Meaning that both the
15 average temperature and the cold temperature would be
16 adjusted to fit the hot leg temperature at full power
17 operation.
18 MEMBER SKILLMAN: But your table shows, at
19 100% power, at 160 megawatts thermal, your T hot's
20 590.1, your T cold's 496.6. But you T av has been
21 constant from 15% to 100% power. So your T av's been
22 constant for 75% or 85%. So I don't understand how
23 the comment that you just made is consistent with the
24 words in your FSAR.
25 MEMBER BLEY: I think you just said you

1 hold TH constant, which isn't what we're looking at.
2 MR. SEXTON: There's two different
3 variables at play here, and so, one, the real reactor
4 has a given flow. When you have a given flow, and
5 flow is not variable, which is, you know, the real
6 reactor. But right now there's some uncertainty about
7 what the flow might be. You have the real reactor,
8 you have the given flow.
9 You hold TF constant from 15% power to
10 100% power. And when you get to 100%, your T hot is
11 going to be at 590. And so if you were to have less
12 or more flow in the real reactor, that would also be
13 true. But the value that you hold TF constant at,
14 from 15% power to 100% power, would shift up or down
15 depending on that, achieving that hot temperature of
16 590 at full power.
17 MEMBER CORRADINI: I think I get it. I'm
18 not sure what's, all they're basically saying is that
19 they're going to control the heat sink such that T
20 cold goes down and T hot goes up and they hold TF
21 constant.
22 MEMBER BLEY: Unless flow is changing for
23 some reason.
24 MEMBER CORRADINI: Right, but that's their
25 operational plan.

1 MEMBER MARCH-LEUBA: After we know how
2 much flow they have.
3 MEMBER CORRADINI: Well, all he's saying
4 is the gray line may not be 543, the gray line might
5 be 545 or 540. But whatever it is, they're going to
6 hold it constant from 15% power to 100%. That's what
7 I thought you said.
8 MEMBER BLEY: But the red line or orange
9 line at 100% power is always going to be temperature
10 you said. It's out of my head.
11 MEMBER MARCH-LEUBA: Twenty-five degrees
12 sub-cooling.
13 MEMBER BLEY: Yeah.
14 MR. SEXTON: Yeah, those comments are
15 consistent with the design. And this is, you know,
16 really operation controls of the design. It's not a
17 feature of the reactor coolant system as much as it is
18 a technique for operating the plant.
19 MEMBER SKILLMAN: Will your operators or
20 your NCS control at 543.3?
21 MR. SEXTON: So, as you're ascending in
22 power or descending in power, the operators in
23 conjunction with the automatic control system with
24 control TF to that constant value over that range.
25 MEMBER SKILLMAN: Then I don't understand

1 how the words on page 5.1-5 at the bottom of the page
2 are accurate, given what you've just said.
3 MR. SEXTON: Yeah, so we can pull up those
4 words. And could you read them again, I'm pretty
5 sure.
6 MEMBER SKILLMAN: Here are the words. The
7 full power average coolant temperature is higher for
8 higher primary coolant flow conditions and lower for
9 lower primary coolant flow conditions. That's TF,
10 it's talking about TF.
11 MR. SEXTON: Yeah.
12 MEMBER SKILLMAN: And what I see is a
13 constant of TF from 15-100, and I think you're going
14 to adjust rod position to add enough reactivity to
15 maintain 543 for what are then existing conditions in
16 the --
17 MR. SEXTON: Yeah, so that sentence is
18 talking about reactors that had different outcomes for
19 hydraulic loss, right. So right now there's
20 uncertainty in hydraulic loss, and that uncertainty
21 will get resolved when you build and run a plant.
22 And if that uncertainty yields, you know,
23 the high end of the band or the low end of the band,
24 that reactor with that specific hydraulic loss would
25 have an adjusted control to move TF up or down. But

1 any specific reactor keeps constant TF.

2 MEMBER SKILLMAN: Not trying to give you

3 raspberries here, but it just seems as though the

4 wording that is --

5 MR. SEXTON: Understood.

6 MEMBER SKILLMAN: In the document needs at

7 least one more sentence.

8 MR. SEXTON: Okay.

9 MEMBER SKILLMAN: And that sentence would

10 be something like, This may be varied based on the

11 actual flow conditions that exist in the final as-

12 built plan.

13 MR. SEXTON: I understand your point.

14 MEMBER BLEY: I'm a little, this morning,

15 people talked about the possibility that you'll have

16 load following. And if you do, that's going to affect

17 your flow. Natural circulation flow is going to be

18 dependent on the thermal driving head, which is going

19 to be bigger at higher powers.

20 MS. FOSAAEN: Right, but as we discussed

21 this morning, load following is not part of the DCA,

22 so that would require a separate evaluation.

23 MR. SEXTON: To clarify, just because flow

24 goes up or down like the bottom figure shows, you

25 know, from high power to low power for a specific

reactor doesn't mean you're changing your control system for temperature.

The only way you would, can change your control system for temperature is if you had a different hydraulic loss. Hydraulic loss is constant across different powers, like the coefficients, I mean, right.

So when you look at the lower curve, that's for best estimate hydraulic losses. And as you descend or ascend in power, you get different flow in the primary loop. But you still maintain a constant TF. All that that is saying is that with uncertainty of hydraulic losses, you're going to have to make some adjustments to the specific temperatures at which you control for that operating plan.

MEMBER BLEY: But after initial setup, then.

MR. SEXTON: Yeah, then it's constant TF, that's how you control from 15% to 100% power.

Okay, let's move along. So, we're going to jump into 5.2.

MR. NOEL: All right, so I'm going to go through 5.2. And given that our RCS and our reactor vessel are kind of the same thing, we've just included the material section here in 5.2 so we can go through

that one time.

So let's go through some of the typical or some of the kind of the standard stuff that we have. The code of record for our RPV is ASME boiler and pressure vessel code 2013 with no addenda. And we have the overpressure protection as provided by the reactor safety valves.

And this is, we talked about it a little bit earlier, but we also provide the low temperature overpressure protection with the reactor vent valves. Because we have those valves, and at low pressures they will be available to use if we utilize them for that low temperature for that L top condition.

MEMBER BLEY: A separate question. Most of this I can envision, but I might be not envisioning correctly. We're going to visit your place in a couple of months. Do you have mock-ups of the power module and everything with cutouts so we can actually see how this is rigged up? I don't know that we put that on our list, but I would, if they have such things.

MR. NOEL: Yes, we do. We have a few different 3D models of varying scale and size.

MEMBER BLEY: I think that'd be really helpful for us to get a look at that. I'm not going

1 to send you a note, Mike.

2 MR. NOEL: I would enjoy showing that to

3 you, so we'll keep that noted.

4 Along with that, we have a COL item to

5 ride the overpressure protection request. The

6 materials for our design conform to ASTM. And we have

7 a, sorry, ASME. We have a listing of some of the

8 materials. We have a SA508 base material for the RPV

9 shell. We have Alloy 690 used steam tubes with some

10 safe ends.

11 We have dual-certified 304/304L piping in

12 the system. And that's all kind of the typical stuff.

13 And then this austenitic stainless steel and nickel-

14 based cladding is also similar to what you guys have

15 seen before on most reactors, but we wanted to call

16 out that here it's, we apply it to the internal and

17 external surfaces of the RPV.

18 MEMBER REMPE: So, I think I brought this

19 up a while ago in a discussion about Chapter 19, but

20 you're saying the SA508 is a typical RPV vessel-based

21 metal. Most of the vessels that I looked into, I

22 don't know, ten, fifteen years ago, were SA533, V1.

23 RMEMBER BLEY: Plate versus forging,

24 they're the same.

25 MEMBER REMPE: So they're exactly the

1 same? Okay. And properties for materials at high
2 temperatures would be identical? Thank you.
3 MEMBER RICCARDELLA: Is piping stainless
4 steel or carbon?
5 MR. NOEL: Oh, the piping is the dual-
6 certified 304/304L stainless steel.
7 MEMBER RICCARDELLA: Okay.
8 MR. NOEL: The fasteners are Alloy 718,
9 and this is because they are exposed during certain
10 phases of the refueling to pool water, so we're
11 selected the appropriate material for corrosion
12 resistance. And we didn't list out all of the
13 different fabrication requirements, but we follow the
14 applicable codes and regulatory requirements.
15 MEMBER RICCARDELLA: Is the reactor vessel
16 stacked rings or welded with circ welds? It's all
17 forging, forged with the rings that are stacked.
18 MR. NOEL: That's correct. Next slide.
19 We just included an image here to show the different
20 applicable sections of code that we have NF, so
21 applying to the sides of the support structure, the
22 CRDMs, the RBVs per NV. The supports, again, for the
23 vessel itself are per NF and then NG for the steam
24 generator tubes. Next slide.
25 Okay, here's the five-threesome of our

1 fracture toughness requirements, surveillance
2 requirements, pressurized thermal shock screening, and
3 upper shelf energy comply with regulatory
4 requirements. And out limit curves were developed in
5 accordance with the technical report, technical report
6 18177.
7 And we have COL items to establish
8 measures to keep the RPV clean during construction, to
9 develop procedures, and to develop the material
10 surveillance program for the --
11 MEMBER RICCARDELLA: Where are your
12 surveillance specimens going to be? Can you show us?
13 MR. NOEL: Surveillance specimens?
14 Slides, I think. Do we have a slide for that? Let
15 me.
16 MEMBER RICCARDELLA: Did I miss that? I'm
17 sorry.
18 MR. NOEL: Surveillance specimens, I was
19 thinking about which slide would be the best to talk
20 about that. There'll be a slide in the future that'll
21 have a picture on it that I could probably point
22 towards. We'll wait until there's an image of the --
23 MEMBER RICCARDELLA: They'll lead the,
24 okay, I'll wait.
25 MR. NOEL: It probably won't be a text on

1 the slide, but there'll be ones that'll have something
2 we can actually point to.
3 MEMBER RICCARDELLA: Thank you.
4 MR. NOEL: Next slide. So the reactor
5 coolant chemistry conforms to the EPRI guidelines,
6 that is effectively what we're showing here. And that
7 we're going to have COL items to develop chemistry,
8 water chemistry plans, boric acid control programs in
9 accordance with those guidelines. Next slide.
10 Our inspections are per the code section
11 11. It's applicable to all the Class I components,
12 except for the steam generator tubes, which are
13 covered by their own program. And we have the
14 appropriate COL item for the development of a site-
15 specific inspection plan. Next slide.
16 We have a leak protection system, or leak
17 protection capability. We have methods, based on the
18 fact that our reactor is maintained at a vacuum, any
19 leakage from the RCS into containment will be
20 collected by a containment evacuation system, where it
21 will then be condensed and the quantity will be
22 monitored.
23 We have, we monitor containment pressure
24 and so we'll know that those conditions are maintained
25 where any leakage would be in the vapor state. We

1 also have radioactive monitoring and chemistry
2 analyses of what's being drawn off of the containment,
3 as well as the RCS inventory mass balance to monitor.
4 MEMBER SKILLMAN: But let's talk about the
5 mass balance. So CVCS has a surge tank, not really a
6 storage tank. It's basically a hydronic heating
7 system surge tank. And you have a pressurizer that
8 has a level that's I think being adjusted by CVCS,
9 probably a module control system set at pressurizer
10 level.
11 For whatever the variations are in
12 temperature, how accurate is your RCS inventory mass
13 balance system? On a regular P, you've got a fixed
14 pressurizer level, and you're basically watching your
15 CVCT level and your makeup tank level. And the change
16 in those levels is the information that you'll use to
17 develop a primary leak rate, whether it's identified
18 or not identified, whatever your tech specs are.
19 How accurate is the balance system that
20 you have here with just the surge tank and the
21 pressurizer level that's really part of your reactor
22 cooling system?
23 MR. NOEL: I can't speak directly to that
24 one. I'm sure I have people back in the office who
25 can. But the thing I'd like to point out is our

1 primary method of detection is that first point, is
2 that the entire RCS is contained with inside of
3 containment.
4 So any leak from the RCS would be to
5 containment. And we think that's just an extremely
6 effective collection method that all of the gas from
7 containment will be collected in a single sample
8 vessel in a common source. I think we have redundant
9 vessels.
10 MEMBER CORRADINI: So it's a sump in the
11 containment.
12 MR. NOEL: Not -- no, it's not a, it's, we
13 maintain the vacuum in containment sufficient that
14 there cannot be liquid water. You know, everything in
15 that condition would be in the vapor phase.
16 MEMBER CORRADINI: Oh, it would be.
17 MR. NOEL: So it will be collected through
18 our vacuum pumps, run through a condenser, collected
19 in a vessel.
20 MEMBER CORRADINI: You won't have any
21 standing water, and the water you have it designed
22 there will be no standing water?
23 MR. NOEL: Correct, no standing water. If
24 there were, the containment pressure monitoring would
25 ensure that we maintain conditions where standing

1 water could not exist.

2 MEMBER CORRADINI: So you're, are we

3 allowed to say what you're -- yeah, I know that, I

4 just can't remember what it was. So you're pulling it

5 down to what, are you allowed to say?

6 MR. NOEL: I don't know if we, it that's.

7 MS. FOSAAEN: I think we have the

8 individual on the phone that can better address this

9 part of the question. We do have an individual on the

10 phone who's available to better discuss this question.

11 MEMBER CORRADINI: Well, qualitatively,

12 you answered my question. I assumed you had

13 essentially a liquid measurement. You actually have

14 a vapor measurement, because you pull it off and then

15 condense it and measure it, right, okay.

16 MR. NOEL: It's very low. I don't know

17 that we, if the exact measurement is something that we

18 want to --

19 MEMBER CORRADINI: No, it's a matter of

20 because you're basically cooling the containment with

21 the swimming pool outside, and you're heating it with

22 the vessel. So I wasn't sure what the condition was.

23 That's fine.

24 MEMBER SKILLMAN: But a very, very small

25 primary leak is going to create quite a contribution

of saturated fluid into the flask. So how do you size your vacuum pump for a several-gallon-a-minute primary cooling system?

MEMBER CORRADINI: That actually leads me to the question I was going to ask. I thought somewhere in here you've got a reg guide that gives you a limit that they've got to maintain it, right.

MEMBER SKILLMAN: Well, it's one thing to watch steam coming out of one atmosphere. It's something else to watch steam coming out at 29 inches of mercury. What you'll do is you'll fill the, you're fill your containment with saturated steam if you have a medium-sized leak. So your vacuum pump's going to have to be more like a hogging pump than just a small vacuum pump.

MR. NOEL: I think the allowable leak size we have will be controlled by tech specs and be fairly low. Really very low compared to what you're probably used to with the existing fleet.

MEMBER CORRADINI: So I wrote down that reg guide 1.45 requires to determine something at or below one gallon per minute over an hour.

MR. NOEL: We will have tech spec 3.7.3 that will require that secondary side leakage be less, that we be able to monitor at I think 1.5 gallons per

1 hour.

2 MEMBER SKILLMAN: Secondary side or

3 primary side?

4 MR. NOEL: That's secondary side, but

5 that's this, so the reason we put that LBB is covered

6 in 363. So the LBB is covered there, but the leakage

7 detection method that will be used to meet that is

8 this leakage detection method. And the leak rate for

9 that is 1.5 gallons per hour.

10 CO-CHAIR KIRCHNER: That ties to leak

11 before a break consideration.

12 MR. NOEL: Right, so this leak detection

13 capability is very precise.

14 CO-CHAIR KIRCHNER: Now how, going back to

15 Dick's point, you have a very, all things compared,

16 you have a very large pressurizer volume in comparison

17 to a standard PWR, a large PWR. So how are you

18 controlling level? You've got, if I remember

19 correctly, the CVCS system will be continuously

20 spraying at a certain rate.

21 MR. NOEL: We have a slide coming up for

22 the pressurizer where we'll have some images and

23 bullets of the pressurizer if you want to hold the

24 questions for there, we have the picture.

25 CO-CHAIR KIRCHNER: A related matter,

1 let's see, I think there's a statement that all of the
2 RCS piping that's inside containment is, what's the
3 expression you used, it's solid. If you have leakage
4 into containment, then you're going to have steam and
5 some boron going into places you probably don't want
6 it.
7 I understand during refueling you're going
8 to let the water pool into the containment vessel, so
9 there's a source of boron. But if you have leakage,
10 then you're going to have a source of boron for all
11 your internal piping, all piping internals of the
12 containment.
13 And you've got welded piping from the
14 primary, the reactor pressure vessel to the
15 containment vessel. So it seems to me that in-service
16 inspection with modest leak, all valves leak so you're
17 going to have some leakage at some point, especially
18 with this many modules going through this many
19 refueling operations.
20 Are you prepared to deal with that in
21 terms of access and inspections for purposes of
22 Section 11 of the code?
23 MR. NOEL: Are you asking about like
24 decontamination or preparation of the surface to
25 perform the inspections?

1 CO-CHAIR KIRCHNER: Well, initially it's
2 going to be clean. I assume it's, you know, it's
3 shipped, it's handled, it's not contaminated and such.
4 But I'm talking about after operation.
5 MR. NOEL: Right.
6 CO-CHAIR KIRCHNER: Now, you're going to
7 have leakage. So you are going to get steam and boron
8 into the containment vessel. It will find its way to
9 pipe seams. So given that you have a large amount of
10 fixed piping from the reactor pressure vessel to
11 containment pressure vessel, how are you going to deal
12 with those aspects of the in-service inspection
13 requirements?
14 MR. NOEL: Development of the inspection
15 program is part, is something that we're specifying
16 for the COL applicant, as a COL item. So how they
17 will, the specifics, are you just talking about how we
18 are going to clean off any residue before it might
19 have built up?
20 MEMBER RICCARDELLA: Well, what's the
21 general plan? I mean, to do the inspections while
22 it's in the refueling area?
23 MR. NOEL: Yeah, the, oh, okay, the
24 general plan would be that during refueling when it's
25 --

1 CO-CHAIR KIRCHNER: So you would, the
2 whole upper containment vessel and reactor, that whole
3 assembly would come out of water?
4 MR. NOEL: Yes.
5 CO-CHAIR KIRCHNER: And you would inspect
6 it?
7 MR. NOEL: Yes. Yes, so the normal
8 strategy would be to, would be take it to the
9 refueling pool, remove the lower vessels, and take it
10 over to the inspection rack.
11 CO-CHAIR KIRCHNER: So there's a high bay.
12 So your crane can lift high enough to take that entire
13 vessel up out of the pool?
14 MR. NOEL: The --
15 CO-CHAIR KIRCHNER: Almost the entire
16 vessel, because you're just taking the bottom off.
17 MR. NOEL: The module inspection rack is
18 within an area that has a dry dock, a method of being
19 isolated and pumped out. I'm not sure --
20 CO-CHAIR KIRCHNER: So is the expectation
21 each time you refuel, you would take that to the dry
22 dock and then do a in-service inspection?
23 MR. NOEL: Yes, yes.
24 CO-CHAIR KIRCHNER: Okay, thank you.
25 MS. FOSAAEN: There was one thing I wanted

to clarify just briefly. We do have two tech specs on leakage. There is as RCS operational leakage limit in 3.4.5, and then there is a separate leak-before-break tech spec in 3.7.3.

MEMBER REMPE: But there was a lot of interaction with the staff on the need to have those tech specs. And so this is resolved status of the situation?

MS. FOSAAEN: The discussion was relative to the leak-before-break tech spec specifically, and yes, that was, the resolution was to add that additional spec.

MEMBER REMPE: Thank you.

MEMBER CORRADINI: So just to be clear, the SE that we were reading, it still had it as an open item. So this has been resolved?

MS. FOSAAEN: I believe at the time the SE was written, it was still in negotiation with the staff. So yes.

MR. BAVOL: This is Bruce Bavol. That particular item is, just some clarification wording is remaining that we need to touch base with NuScale. So we opted to leave that open item.

MEMBER CORRADINI: This 5.2.3, now I've lost it, 5.2.5-3 and -4? That's what I had written

1 down. It was RAI 1901, 9201, and RAI 9213?

2 (Off microphone comments.)

3 MEMBER CORRADINI: Okay, thank you.

4 MEMBER SUNSERI: Can you say what those

5 values were for the leak before break in the

6 operational value? Is that public, I mean, is that

7 information you can share?

8 MS. FOSAAEN: For tech spec 3.7.3, it is

9 less than 1.5 gallons per hour in the limiting

10 condition for operation. And then if, for 3.4.5, it's

11 0.5 gallons per minute unidentified, 2 gallons per

12 minute identified leakage from RCS, and 150 gallons

13 per day primary to secondary leakage.

14 MEMBER SUNSERI: But you can't identify

15 leakage.

16 MS. FOSAAEN: Correct.

17 MEMBER SKILLMAN: On this topic, let me

18 ask a question, and it has to do with leakage. The

19 paragraph that I'm reading is in your FSAR, it's

20 paragraph 5253. This has to do with bolted flanges,

21 and this is the reactor vessel flange.

22 Bolted flanges and covers in the RCS are

23 sealed by double concentric O-rings. These flanges

24 and covers include a leak-off port located between the

25 two concentric O-ring grooves, providing the

capability to pressurize the space between the O-rings, thereby confirming that the O-ring seals are leak-tight prior to operation.

The maximum diameter of the leak-off connection is restricted by an orifice to a size such that a break is less than the normal makeup capacity of CVCS. Additional RPV flange leak-off is not provided.

Is this paragraph ascribing to CVCS a safety function?

MR. NOEL: I don't believe it is. I'm trying to understand exactly what we were stating in that.

MEMBER SKILLMAN: Well, back in the old days, if your makeup pump could accommodate basically a one-inch schedule 160 leak, it was a leak and not a break. This appears to be somewhat of that same logic.

MR. SEXTON: Yeah, that distinction for the definition of a LOCA still exists in the NuScale design. It's basically, you know, whether or not it could be a continued operation occurring while that was a leak, right.

Which is kind of the distinction between a leak and a LOCA, where a LOCA's definitely going to

1 put you out of operation because your CVCS will not be
2 able to keep up. Where a leak might leave you in
3 operation with you CVCS able to keep up.
4 MEMBER SKILLMAN: So in this scenario, if
5 there is a leak between the O-rings, particularly from
6 the inner O-ring to the annulus, then you've got
7 reactor coolant system leaking into your containment.
8 And this is a hole, I would guess, that's a sixteenth
9 of an inch in diameter, or something approximately
10 that size.
11 MR. NOEL: We would definitely be able, if
12 there was a leak, we would be able to detect it. What
13 I'm trying to think of and look at my colleagues for
14 is whether we commit to having caps and plugs on
15 those.
16 MS. FOSAAEN: So I think what you'd see is
17 that your pressure would go up and your leakage, your
18 detectable leakage would go up. And your tech specs
19 would drive you to take action pretty readily if you
20 didn't have an operational response from the reactor
21 otherwise beforehand.
22 MR. SEXTON: Yeah, I would add or try to
23 clarify that. You know, that source of leakage is no
24 different than any other source of leakage. Is there
25 a question specific to the flange that we're making?

MEMBER SKILLMAN: It gets to the integrity O-ring, is the reason I asked the question.

MR. SEXTON: Okay.

MEMBER SKILLMAN: Normally, when you button up, you check the pressure between the O-rings, put a Heise gauge on it and let it sit for a while. And when you're comfortable that it's not leaking, you secure even that tattle-tale.

MR. NOEL: Yeah, and that's the intended function of that, too, it's to ensure that as we're buttoning it up, it's very tight. That we obviously wouldn't want to find leaks after, at any point, because we have to maintain a very tight RCS.

MEMBER SKILLMAN: How do you do that 55 feet under water? With care, I guess.

MR. NOEL: With care.

MR. SEXTON: Those kinds of things, like a man way that is being sealed, would be done in the dry dock during the inspection interval of the outage. So you know, most of the components that you're taking apart and putting back with these double seals is going to be done not underwater.

MEMBER SKILLMAN: You're not going to do this one in a dry dock, you're going to want 25 feet of water on this core.

1 MR. NOEL: This specific one you're
2 referring will be done in the reactor flange tool
3 under water, as you're indicating.
4 MR. SEXTON: I didn't realize you were
5 talking about the reactor --
6 MEMBER SKILLMAN: That's the one I'm
7 talking about. Thank you.
8 MR. SEXTON: All right. Okay, we're going
9 to start on 5.4, which is subsystem design of the
10 reactor coolant system components. So we're going to
11 jump right into 5.4.1, which is the steam generators.
12 So here we have a figure of the
13 configuration in the dry dock, if you were curious
14 about our other conversations about what the module
15 might look like in the dry dock for inspection access.
16 It's kind of a side point for this figure with regard
17 to the steam generator, but what we're trying to show
18 here is that the tubes start at the lower plenum, the
19 feed water plenum, and then spiral around the riser up
20 to the steam plenum.
21 Both of those have some access. And we
22 wanted to go through kind of the steps we've taken to
23 be comfortable with this steam generator design.
24 First, we've built some test facilities to measure
25 heat transfer coefficients and hydraulic losses

1 through the primary and secondary sides of these.
2 MEMBER CORRADINI: The one in Italy?
3 MR. SEXTON: That's right, we have --
4 MEMBER CORRADINI: I was in the impression
5 it was just a single tube or a group of tubes, not a
6 whole bank. Is that incorrect?
7 MR. SEXTON: There's two facilities right
8 now in Italy, and a third one being built. One is a
9 3-2 facility, which is looking at inside the tube kind
10 of mechanics. And another is a larger bundle. None
11 of them are full bundles, but there are some with
12 many, many, many tubes.
13 MEMBER CORRADINI: Are you allowed to say
14 how many, many is many?
15 MR. SEXTON: We could get that. I don't
16 have that off the top of my head, but we could tell
17 you the size of TF2, which --
18 MEMBER CORRADINI: I remember the 3-2
19 test.
20 MR. SEXTON: That's TF1, and then TF3 is
21 where we are measuring the drop, pressure drop on the
22 primary side where, you know, it's flow through a
23 bundle of tubes.
24 MEMBER MARCH-LEUBA: Can you point with
25 the mouse how the primary flow goes, it goes to the

1 center chimney and then comes out?

2 MR. SEXTON: Yeah, so this is a better

3 figure like you were asking for. The top of the riser

4 is shown at this black line. The flow comes up here

5 and turns. So it'll turn in 360 degrees and enter the

6 down comer.

7 And it'll be entering the down comer

8 through the tail ends of the steam generator tubes

9 that are having their final bends to line with the

10 tube sheets. And then eventually make a 180-degree

11 turn to make their way through the helical coil and

12 come out the bottom here.

13 MEMBER MARCH-LEUBA: And you have all of

14 the pressure drop of those turns and those complex

15 geometry with confidence?

16 MR. SEXTON: The turn is from a textbook,

17 right, it's not a test facility.

18 MEMBER MARCH-LEUBA: Once it gets into --

19 MR. SEXTON: The part that we've modeled

20 with high fidelity is the high pressure drop part, you

21 know, the part where there's a lot of tubes and

22 they're packed tightly. The section where they enter

23 the plena in our test facilities, it's very hard to

24 make it exactly prototypic. It's not the exact same

25 geometry for welding to tube sheets, so.

1 MEMBER MARCH-LEUBA: So by molded, you
2 mean you've done CFD calculations of that, or?
3 MR. SEXTON: No, sorry, I mean the test
4 facility, TF2, where we are measuring primary flow.
5 MEMBER MARCH-LEUBA: And just out of
6 curiosity, why is there a left side and a right side
7 and left side is plugged in? Is that?
8 MR. SEXTON: No reason. There are four,
9 actually, every 90 degrees, there's a different header
10 on the bottom and the top. And this one is just
11 showing with the plate removed and someone accessing
12 it. This one's shown with the plate on.
13 MEMBER MARCH-LEUBA: But normally there
14 would be a pipe in there.
15 MR. SEXTON: The pipe is shown here. See
16 this pipe coming off the top? So that's welded to the
17 feed water pipe, which is a four-inch line that comes
18 all the way up through the upper head of the
19 containment vessel.
20 MEMBER MARCH-LEUBA: And is that funny
21 thing up there a six-foot robot?
22 MR. SEXTON: This is a, yes, this is a
23 exactly six-foot robot trying to access the tube here.
24 MEMBER RICCARDELLA: Point to the pipes
25 again.

MR. SEXTON: Right here is the stub where the feed water pipe is welded on. There's another one here.

CO-CHAIR KIRCHNER: Colin, what is the total length of the feed water piping inside containment?

MR. SEXTON: I don't have the number off the top of my head, but --

CO-CHAIR KIRCHNER: It must be 30 or 40 feet to get up to the head.

MR. SEXTON: Yeah, about 40 feet to get up to the head. And it also does a lap, you know, for thermal expansion reasons. You don't want to tie directly, so there's a little bit of extra length to be able to accommodate the thermal growth between that location and the upper location. So 40 feet plus some for that is a approximation, but I don't have the number in front of me.

MEMBER BLEY: So the tube sheets are 690?

MR. SEXTON: HQ, do you?

MR. XU: The tube sheets are 508.

MEMBER BLEY: 508, and how are the tubes inserted?

MR. XU: The tubes, I mean the tube sheet has two poles, just like a regular tube sheet.

1 MEMBER BLEY: Yeah, but are they rolled,
2 expanded, rolled and welded?
3 MR. XU: They are hydraulic.
4 MEMBER BLEY: Hydraulically expanded.
5 MR. XU: And then it's welded on the
6 secondary side to the tube sheet cladding.
7 MEMBER CORRADINI: So this is unique, but
8 I was under the impression there are, there have been
9 helical steam generators before.
10 MR. SEXTON: That's correct.
11 MEMBER CORRADINI: So this is unique in
12 terms of how it's mechanically assembled. Is,
13 there's, what I can't remember now is there's two
14 inlet feed water headers, or four?
15 MR. SEXTON: Four, so there's four, and
16 there's two independent steam generators. So you have
17 two feed water headers located, you know, 90 degrees
18 apart from each other that are part of the same steam
19 generator.
20 MEMBER CORRADINI: But all of them
21 together wrap around the --
22 MR. SEXTON: That's right. So what we
23 have shown over here is an example of a set of tubes
24 that belong to one steam generator. You can see here
25 they all come out of the same feed water plena in they

all go into the same steam plena. Does that make sense? And this is one-quarter of a column of two, so you can imagine filling up the empty space here with four other sets and, you know, three other sets, sorry.

And two of those sets are going to be from other feed water plena, part of the other independent steam generator. And one is going to be, you know, part of that same steam generator. Some of the tubes cross over to the opposite steam, and some stick with the same side steam header based on tube length and orientation of the assembly.

MEMBER BLEY: Another question on the, I'm looking at the access door, and that looks like it's coming in where the tubes are, so it's actually on the primary side. Is there another access door up in the feed water header that you can actually get access to the welds?

MR. SEXTON: This is where you get access to the welds. So the tubes are coming through this --

MEMBER BLEY: That tube sticking up over there isn't quite the way it was described.

MR. SEXTON: Can you describe why?

MEMBER BLEY: Well, point exactly to where the tube sheet is.

MR. SEXTON: This plate here is like the tube sheet.

MEMBER BLEY: Okay, and then the welds are right there.

MR. SEXTON: The welds are where this robot's hand is.

MEMBER BLEY: Okay, and then that little nipple-like thing going up is the connection into the --

MR. SEXTON: Feed water pipe, yeah. So all the feed water comes in, mixes in here, and is distributed through each tube in the tube sheet.

MEMBER BLEY: So it's like a plenum on each side.

MR. SEXTON: Yeah, that's right, and --

MEMBER BLEY: Roughly how big is that?

MR. SEXTON: Well, there's a six-foot man there, so that's kind of your gauge for the size of the.

MEMBER BLEY: Two and a half feet by a foot thick?

MR. SEXTON: It's not that thick, the plenum. You mean a tube sheet?

MEMBER BLEY: The plenum yeah.

MR. SEXTON: The tube sheet, or the --

1 MEMBER BLEY: No, the plenum.
2 MR. SEXTON: Oh, yeah, something, two
3 feet, maybe one and a half feet of depth.
4 MEMBER BLEY: And then there are pipes
5 from the plenum up into the feeder, is that channel,
6 or what is that?
7 MEMBER SKILLMAN: Those are the 40-foot
8 long pipes.
9 MR. SEXTON: This part, the feed water
10 pipe?
11 MEMBER SKILLMAN: Yeah.
12 MR. SEXTON: Yeah, there is a four-inch
13 pipe welded onto this section, and it goes up to the
14 CND head, where it's, you know, goes to the condenser
15 and that's where the feed water is coming in.
16 MEMBER RICCARDELLA: There's four of them,
17 four of those 40-foot pipes.
18 MR. SEXTON: That's right.
19 MEMBER RICCARDELLA: And then on --
20 MR. SEXTON: Sorry, they join and only one
21 passes through the containment head. So the two four-
22 inch pipes are combined and --
23 MEMBER MARCH-LEUBA: And the area where
24 the feed water pipes are going is the containment,
25 right?

1 MR. SEXTON: Containment head is where
2 they enter.
3 MEMBER MARCH-LEUBA: That will be the
4 place where you connect.
5 MR. SEXTON: Yeah, that's correct.
6 MEMBER RICCARDELLA: And then on the steam
7 side, where's the steam tube sheet?
8 MR. SEXTON: The steam tube sheet
9 basically is the baffle plate, so different sections
10 of it. So this whole region, we called it integrated
11 steam plenum, and that's because the baffle plate we
12 were talking about earlier that separates the
13 pressurizer from the circulating pool is a large
14 structural component right at the top of the steam
15 generator.
16 And four sections of that area are split
17 off. They're the steam plenum, and the tube sheets
18 are, you know, horizontally they are aligned just like
19 the baffle plate, where the tubes are coming through
20 vertically into that section.
21 MEMBER RICCARDELLA: Okay.
22 MR. SEXTON: And they're attached the same
23 way.
24 MEMBER REMPE: Talk about inspection. A
25 while back we asked about how you're going to inspect

1 these big generators. And I thought you guys said you
2 had some ideas that you were trying to get patented or
3 whatever, investigate. Did you test them in your
4 facilities in Italy?
5 MR. SEXTON: We've done some tests, not in
6 Italy. So the things we were worried about for
7 inspection were coil drag of a eddy current probe, of
8 trying to get it all the way through this helical
9 coil. You know, that's kind of the different
10 arrangement. We don't have a completely straight
11 section with one bend, we have a continuous turn.
12 So we worried that we weren't going to be
13 able to pull and push our eddy current probe through
14 the tubes. So what we did is we bent one prototypic
15 full-length tube, which was in Oregon, and put a dummy
16 eddy current probe down it, with a, you know,
17 realistic dimension cable and managed to get it all
18 the way through from one side.
19 So we feel good about the capability to
20 do, we've committed to 100% volumetric inspections,
21 regardless of the capability or how it gets done. But
22 we feel good about being able to do it from one side,
23 which is a big advantage for inspection.
24 MEMBER RICCARDELLA: From the top or the
25 bottom?

1 MR. SEXTON: The top is the preferred
2 side, with a dose.
3 MEMBER REMPE: There's been some
4 interactions with the staff about leaving the
5 procedures to the COL applicant but it sounds like
6 you've not really even nailed down exactly what method
7 you're going to be using. You have an idea, but
8 you're not sure about that, even though you've
9 committed to --
10 MR. SEXTON: Yeah, the commitments in the
11 license are about the extent and frequency of
12 inspections. So in the license we have committed to
13 100% volumetric inspection at a frequency. And the
14 technology development of executing it is a long
15 process that we are in the midst of.
16 MEMBER RICCARDELLA: Could you plug tubes
17 if you have to, like they do in --
18 MR. SEXTON: Yeah, we have a ten percent
19 tube-plugging allowance, like a normal steam
20 generator. That's a, basically, our steam generator's
21 bigger than it needs to be, and the design value for
22 heat removal is with ten percent of the tubes plugged.
23 MEMBER BLEY: When I get up to the top of
24 the tubes, all steam up there, I'm a little
25 superheated, if I recall.

1 MR. SEXTON: Yeah, quite a bit
2 superheated.
3 MEMBER BLEY: Quite a bit superheated.
4 MR. SEXTON: About 120 degrees.
5 MEMBER BLEY: So you don't have any, you
6 aren't expecting any condensation right there as it
7 comes out of the --
8 MR. SEXTON: It's going to be much drier
9 steam than you see in a lot of steam generators,
10 especially the ones with steam dryers.
11 MEMBER BLEY: But there aren't anything
12 like separators or drains?
13 MR. SEXTON: No, no, this is a once-
14 through steam generator, consistent with once-through
15 steam generators in the fleet, where there's a large
16 section that causes it to dry out and super heat. No
17 dryer required here.
18 MEMBER RICCARDELLA: But the big
19 difference here is the primary is on the outside and
20 the steam is on the inside.
21 MR. SEXTON: That's right. Yeah, so you
22 know, a once-through steam generator has a long
23 section on the secondary side, which is the shell side
24 for that, and causes superheat through the heat
25 transfer.

1 MEMBER RICCARDELLA: Yeah, understand.
2 MR. SEXTON: For us, we have a long
3 section on the inside of the tube past where it's
4 boiled, you know, where it's going to heat up to the
5 hot let temperature and have a lot of superheat.
6 MEMBER SKILLMAN: Let me ask this
7 question. I was, I became confused when you made the
8 comment that there may be tubes, and I don't know
9 whether you said from a bundle or from one generator
10 crossing over to the other.
11 But what I see in your table 5.4-2, there
12 are 1380 tubes, and by my math, there are 345 tubes
13 per grouping. Please tell me of the four groups of
14 345, is there a crossover for one? From one passel
15 345 into another plenum?
16 MR. SEXTON: Yeah, so there's two steam
17 generators, so let's focus on one steam generator,
18 right. Sorry, did you have a question?
19 MEMBER RICCARDELLA: You say there's two
20 steam, you mean there's two bundles, two separate
21 bundles?
22 MR. SEXTON: No, no, the whole thing, both
23 steam generators are inter-coiled, there's a lot of
24 tubes that are crossed up. But they're not connected
25 fluidically, there's no connection between them. So

1 when you isolate one or one has a break, the other one
2 doesn't notice, right, that it's not connected to it.
3 So if we look at one of them, it has two
4 feed water --
5 MEMBER SKILLMAN: And this is one right
6 here, right?
7 MR. SEXTON: No, no, no.
8 MEMBER SKILLMAN: This helix?
9 MR. SEXTON: No, this is, the helix
10 contains both steam generators. So when we look at
11 one steam generator, it's going to have two feed water
12 plena 180 degrees apart, as shown here, right. And
13 then tubes from --
14 MEMBER BLEY: Steam generator is defined
15 by the plenum it comes through, the feed.
16 MR. SEXTON: Yeah, sure, it's defined by
17 having a fluid connection.
18 MEMBER RICCARDELLA: The terminology we
19 struggle with, you know, I think of a steam generator
20 as the whole shell.
21 MR. SEXTON: Right.
22 MEMBER RICCARDELLA: Like in a PWR, four
23 steam generators.
24 MR. SEXTON: And we use this terminology
25 because when we talk about, for instance, trains of

the DHRS, we're saying they're associated with one of the steam generators, which is consistent with the way it's talked about, you know, in a large PWR. But what we're talking about there isn't a component, we're talking about a fluid system, all right. The steam generator is a isolate fluid system.

So there's two plena 180 degrees apart. Of those 345, was it, that come out of that one, some of them are going to go to one steam header associated with that, and some of them are going to go to the other one, depending on where they end up in their helix.

Each column has a different diameter, and so if you want to keep all the lengths similar, some of the outer columns are going to have different slopes and different amounts of turns to try to not have some tubes that are way longer than other tubes. So two steam plena, two feed plena, those ones will mix with different steam plenum on top, and that will consist of one functional steam generator.

MEMBER SKILLMAN: So here's why I asked the question. Are there any analyses whereby one must make a distinction between one set of, one group of 345 plus 345 and another group of 345 and? Because it's really two sets of.

1 MR. SEXTON: The analyses that affect one
2 but not the other are things like breaks. So if you
3 have a break in a feed water pipe, it's going to
4 affect one of the steam generators but not the other.
5 MEMBER SKILLMAN: But did I hear you say
6 the tubes from one connect to the other, that's
7 complicating that analysis?
8 MR. SEXTON: No, no, no.
9 (Off microphone comments.)
10 MEMBER SKILLMAN: I'm talking to him.
11 MR. SEXTON: So each steam generator is
12 independent but they occupy similar space. The tubes
13 are near one another.
14 MEMBER SKILLMAN: That's where I began the
15 discussion, that's what I thought.
16 MR. SEXTON: You had it right, yeah.
17 MEMBER SKILLMAN: This is supposed to be.
18 MEMBER SUNSERI: So in the, when I think
19 about some of the steam generators I worked with, if
20 you have a flaw in a tube, you usually worry about the
21 surrounding tubes as well. So you stake the one and
22 you maybe plug the other ones, right. Sounds like in
23 this particular case, you could have another steam
24 generator affected by the, are the tubes from both
25 steam generators right next to each other?

1 MR. SEXTON: Yeah.

2 MEMBER SUNSERI: Or are they sufficiently

3 separated?

4 MR. SEXTON: Yeah, some of them are

5 adjacent.

6 MEMBER SUNSERI: So you could have a

7 problem with, I mean, theoretically, you could have a

8 tube that would sever and whip against another one.

9 MEMBER CORRADINI: It's an opposite flow.

10 The high pressure's on the outside and the low

11 pressure's on the inside.

12 MEMBER RICCARDELLA: A tube rupture could

13 affect both generators, that's what you're getting at.

14 MEMBER SUNSERI: Yeah, I guess I didn't

15 think about it like that.

16 MEMBER RICCARDELLA: But they are

17 compression not tension.

18 MEMBER SUNSERI: Yeah, yeah, okay. I have

19 to think about that some more, thanks.

20 MR. SEXTON: Well, we've done with these

21 three bullets, so let's move on to the next slide that

22 has kind of some of those high level features that are

23 different or the same.

24 So, obviously we've been talking about how

25 it's integral, it's part of the RPV. As we've talked

about a few times, shell side is primary side, tube side is secondary side. There's a few implications of that. One is that the historically difficult interaction between the tube supports and the tubes is cleaner, right. We have primary coolant on the surface where the tubes interface with the tube supports.

That can be a challenge when you have a lot of secondary contamination in crevices. So if you look at our secondary side, it's basically crevice-free, right, it's the interior of tubes. The only crevices you might be able to find are, you know, at the inlet where there's still some equipment, like we're going to show with our flow restrictors.

So as far as secondary contaminants getting into crevices and causing trouble, having the highly controlled primary coolant chemistry on that interface is one difference.

MEMBER RICCARDELLA: But there are primary contaminants, right?

MR. SEXTON: That's right.

MEMBER RICCARDELLA: Boron.

MR. SEXTON: Right.

MEMBER RICCARDELLA: For one.

MR. SEXTON: Alloy 690, thermally treated,

1 1380 tubes. Between 77 and 87 feet long, not all the
2 tubes are the same length. Five-eighths inch OD.
3 MEMBER RICCARDELLA: Ron, help me, is that
4 the best thermally treated as opposed to the solution
5 annealed?
6 (Off microphone comments.)
7 MR. SEXTON: Another major difference is
8 that the primary flow is low. It's about one foot per
9 second in this region based on the cross-section and
10 our primary flow rate. And that imparts less energy
11 from thins like turbulent buffeting or less excitation
12 of the structure from the primary flow side.
13 MEMBER CORRADINI: Has that been analyzed?
14 MR. SEXTON: Yes, we -- in a different
15 chapter, 3.9.2, we have the Comprehensive Vibration
16 Assessment Program where we look at several ways to
17 excite the steam generator.
18 MEMBER CORRADINI: 3.9.2?
19 MR. SEXTON: Yes.
20 MEMBER CORRADINI: Thank you.
21 MR. SEXTON: The tube wall degradation
22 allowance is 10 mills, and that's the wall thickness
23 in excess of the minimum ASME requirement for the
24 pressure.
25 As we talked about earlier, we think we

1 can support -- we are going to do 100 percent
2 volumetric inspection. We think we can support that
3 from one side.
4 The last part that we want to highlight is
5 that the normal access to the shell side is from
6 below. And this is important for things like foreign
7 material exclusion and foreign objects. There's
8 nowhere to drop things on our steam generator because
9 you can't access the top of it, right? When you go to
10 look at the secondary side or work on the secondary
11 side -- sorry, the primary side, when you're coming to
12 that shell side, you're going to stand below the steam
13 generator and work from there up into the steam
14 generator.
15 Lastly, we of course have a COL item for
16 a steam generator program and we've committed that
17 program to follow the industry guidance that comes
18 from NEI 97-06 and several EPRI documents that govern
19 steam generator program management and chemistry.
20 MEMBER BLEY: At one of our other meetings
21 one of your members pointed out that the data that led
22 to those programs is for the current PWR-type steam
23 generators and raises the question of how applicable
24 that is to your steam generators. I mean, the thing
25 that kind of worries me is that our masters of

metallurgy for 50 years have told us we've solved the problem, and then lo and behold something new has happened. So this is new.

MR. SEXTON: Yes, we --

MEMBER BLEY: You have low flow on the primary side. Maybe you get things going on in the chemistry over there that's odd. What are you doing about that?

MR. SEXTON: I think we take confidence in having the same materials and chemistry and the same temperatures. A lot of the interactions between the fluid and the structure are right in the same operating regime.

MEMBER RICCARDELLA: Is that diameter and wall thickness about the same, of the tubes?

MR. SEXTON: Yes, this is on the small end of the diameter, but it's within the operating experience for PWR steam generators.

MEMBER RICCARDELLA: Wall thickness?

MR. SEXTON: The wall thickness is in the same ballpark as well, yes. Degradation allowance is similar.

MEMBER RICCARDELLA: Okay.

MEMBER SKILLMAN: Colin, let me ask a question. It is broader than just Chapter 5, but this

is a good example of the Steam Generator Program.

Today we heard in Chapter 5 that the COL applicant will develop the Leak Rate Program. Here is the Steam Generator Program and there are six or eight of these woven in Chapter 5; there was many in Chapter 4. So if I'm an aspiring owner and I'm going to be an applicant and I think, boy, this NuScale design is exactly what I want, as I get ready to put ink to paper I'm buying off 10, 20, 30 person-years of work to do all the COL items.

And here's my question: For some of these COL items where the unique knowledge that the NSSS vendor has; in this case it's NuScale, what is NuScale providing to ensure that the COL applicant really heads in the right direction when the COL applicant develops these programs? The best example is leak rate.

MR. SEXTON: Okay. Well, I was going to answer with the context of the Steam Generator Program --

MEMBER SKILLMAN: Please do.

MR. SEXTON: -- to start.

MEMBER SKILLMAN: Please. Yes.

MR. SEXTON: I think that the EPRI guidance and the NEI guidance getting updated

1 frequently and taking in the OE of the fleet is really
2 important to commit to, and I think that -- whether or
3 not NuScale is leading the program or not, the
4 commitment is in the DCA to --
5 MEMBER SKILLMAN: I'm not suggesting that
6 they're --
7 (Simultaneous speaking.)
8 MR. SEXTON: -- experience.
9 MEMBER SKILLMAN: -- leading the program.
10 I'm suggesting that the NSSS vendor has insights that
11 are critical --
12 MR. SEXTON: Yes.
13 MEMBER SKILLMAN: -- for a COL applicant
14 to be successful.
15 MR. SEXTON: Yes, we --
16 MEMBER SKILLMAN: You just made the real
17 point. The difference in the NuScale design is that
18 environment that the applicant will be working is much
19 cleaner because the primary is located where it is
20 versus the secondary on a normal P. That information
21 is critical for the COL applicant when the COL
22 applicant develops the program. And I would suggest
23 you probably have 20 or 30 more insights like that
24 related specifically to a Steam Generator Program, and
25 so it will be for many of the other design features of

1 NuScale. So what makes sure that NuScale is giving
2 the right amount of information so that the COL
3 applicant is heading in the right direction?
4 MR. SEXTON: Yes, I think obviously it's
5 not a regulatory requirement who works on it, but it
6 is in NuScale's best interest to work hand in hand
7 with anyone using our plant, and we fully intend to do
8 so.
9 MR. SCHULTZ: And it's also useful to have
10 owner 1, owner 2, owner 3 to be doing the same
11 thing --
12 (Simultaneous speaking.)
13 MR. SEXTON: Absolutely, which the
14 industry has seen a lot of cooperation on that front
15 and we expect the same with a NuScale fleet, if we get
16 there.
17 MEMBER SUNSERI: Maybe just kind of tying
18 onto this, but bear with me a little bit. So as far
19 as the steam generator inspection goes, because of the
20 uniqueness of the helical tube, have you developed the
21 appropriate inspection standards, or do you even know
22 that the inspection standard can exist to detect the
23 degradation at the level necessary for this design?
24 I mean, like each tube type has a standard, right, for
25 the eddy current probe?

1 MR. SEXTON: Yes. Did you have something
2 to say, Derek?
3 MR. NOEL: I think that's something that
4 we would be anticipating to be developing as we go
5 forward, but that is not something that we have
6 developed at this time in that -- I think part of the
7 Inspection Program --
8 (Simultaneous speaking.)
9 MEMBER SUNSERI: So let me -- so I'm going
10 to say this kind of harshly, so forgive me, but so you
11 committed to 100 percent volumetric inspection, but
12 you don't know that you can have the standard to
13 achieve that?
14 MR. NOEL: We haven't developed those
15 programs yet. We have engaged with some vendors and
16 gotten some support to believe that we can. We just
17 have not funded the effort to do that yet.
18 MR. SEXTON: Yes, to get it all the way
19 there where you're done with your custom eddy current,
20 you're ready, you've demonstrated on the real thing,
21 it takes time, and we're headed in that direction.
22 MEMBER SUNSERI: Yes, I would have thought
23 since you already have some prototype tubes though you
24 would have tried to --
25 MR. NOEL: The procurement of those tubes

is part of that effort, but that's an ongoing activity.

CO-CHAIR BALLINGER: But you have quite a different design. They say in the fossil business fabricating this type of steam generator is routine, helical tubes, but in the fossil world there's no pressure on the outside. That's the fire box. And so you're still pressurized on the inside making steam. So that's different.

In your case you have pressure on the outside and you're making steam on the inside, but in the fossil case the failure mode would be rupture. In this case it would probably be creep collapse or something like that, whereas in the nuclear steam generator side the normal -- normal steam generator side you've got pressure on the inside, pressure on the outside, but there's the differential pressure is positive.

So when you stick an eddy current probe up there, whether it's a rotating coil or a pancake or whatever it is, you're looking for cracks or volumetric at 40 percent rule, whereas in this case when you're doing an inspection you -- the type of degradation that you might find will not be a crack because it's in compression, right? But you might

1 ovalize the tube, and so the probe might not get up
2 through the tube to do that. So your criteria for
3 calling a defect will likely be different. Am I -- so
4 it's not simply adapting something -- a large database
5 that already exists to this design, it's really coming
6 up with a new database for this design.
7 MEMBER SKILLMAN: I think it's a new
8 technique.
9 CO-CHAIR BALLINGER: Well, okay. That
10 means --
11 MEMBER SKILLMAN: I think some applicant
12 is going to say I'm successful if none of my probes
13 get stuck.
14 CO-CHAIR BALLINGER: Well, if your probe
15 gets stuck, that's probably a telltale that something
16 ain't right.
17 MEMBER SKILLMAN: That's what I'm -- there
18 are unique features in this design where I think --
19 I'm not trying to burden NuScale, but where I think
20 NuScale has got to be the leader in guiding what will
21 be the COL Program. Same for reactor coolant system
22 leak rate.
23 CO-CHAIR BALLINGER: Well, that's why I --
24 MEMBER SKILLMAN: There are unique
25 features that only the NSSS vendor has the key insight

1 knowledge to guide.

2 CO-CHAIR BALLINGER: But what this means

3 for the program is that no operator of large PWR steam

4 generators would ever commit to a -- would ever do 100

5 percent inspection unless somebody had a gun to their

6 head, whereas you guys are going to have to do 100

7 percent inspection to -- as part of your program

8 development to develop the database that you need to

9 support going forward where you -- you don't want to

10 ever have to do 100 percent inspection.

11 MEMBER SKILLMAN: No, but they're not.

12 The COL applicant is going to do it.

13 CO-CHAIR BALLINGER: Well, the --

14 (Laughter.)

15 CO-CHAIR BALLINGER: Yes, okay.

16 (Simultaneous speaking.)

17 MEMBER CORRADINI: Watch, we have to be

18 careful who we ascribe behavior to.

19 I think where -- what Steve was -- what

20 our consultant Dr. Schultz was saying I think is

21 important is that where NuScale is kind of coming in

22 is going to have to commit to some sort of program

23 with the initial owners to develop an experience base.

24 MEMBER SKILLMAN: That's what I'm trying

25 to say.

1 MEMBER CORRADINI: A consistent group
2 together is what I think you guys were asking over
3 here.
4 MEMBER SKILLMAN: Right.
5 MR. SCHULTZ: As has Dick in a different
6 way.
7 MR. SEXTON: Yes, we appreciate that
8 thought.
9 MEMBER REMPE: But to follow up on what
10 Ron was saying, is there an application, Ron, where
11 one might glean some knowledge about the other methods
12 of collapse that you're talking about?
13 CO-CHAIR BALLINGER: I don't know, but I
14 probably am not the right person to ask in terms of
15 other industries. And Pete might know. I think the
16 thing is when you're detecting cracks in a steam
17 generator where you've got a differential pressure
18 across it, the chances are that if you develop a
19 crack, there's going to be something in it. And so
20 the eddy current is going to pick that up and you'll
21 find it easily. You're not going to get cracks I
22 don't know here. And if you do get cracks, they're
23 going to be tightly closed and that's going to
24 influence the POD, probability of detection, for
25 cracks. Now you'll detect volumetric problems.

1 MEMBER RICCARDELLA: Well, it's not going
2 to be pressurized when you're inspecting it.
3 MR. SEXTON: Yes, you're true.
4 (Simultaneous speaking.)
5 MEMBER RICCARDELLA: -- compression when
6 you're inspecting it.
7 MR. SEXTON: That's --
8 MEMBER RICCARDELLA: You might have some
9 tension at the tube sheets, at the welds,
10 discontinuities and some stresses, right?
11 PARTICIPANT: You could have wear, too,
12 vibration wear.
13 CO-CHAIR KIRCHNER: Colin, have you looked
14 at the primary side of the feed water tube sheet?
15 What's different here is that now we have the higher
16 pressure at the tube sheet working on trying to
17 collapse that -- the fitting right -- it's rolled in.
18 It's --
19 MR. SEXTON: Hydro-formed.
20 CO-CHAIR KIRCHNER: It's hydro-formed and
21 then the weld is on the feed water side, not the
22 primary, at the cladding. So now you have higher
23 pressure where the tubes meet the tube sheet on the
24 primary side. Is there a possibility that that being
25 a cold spot that would preferentially take the boron

1 out and just let it deposit there and build up? It's
2 relatively low flow. I'm just thinking that if I were
3 worrying about where I would see a problem -- the
4 upper tube sheet for the steam plenums is a straight
5 access. I wouldn't expect to see problems there, but
6 places where there is low flow and then there's a
7 forest of tubes is like an invitation for deposits to
8 settle out.
9 MEMBER CORRADINI: You're worried about
10 precipitation in the crevices. That's what you're --
11 CO-CHAIR KIRCHNER: Yes, decrepitation and
12 crud right here. I'm looking at 5.4-5. It's your
13 feed water plenum access port. And in particular I'm
14 thinking about what may happen with relatively low
15 flows on the primary side of the tube sheet there in
16 terms of deposition. I'm not saying it is a problem,
17 but if I were to look for potential problems, that's
18 where I think I would be concerned.
19 MR. SEXTON: I think it's one of the --
20 CO-CHAIR KIRCHNER: It's just an
21 observation. It's not a --
22 MR. SEXTON: Sure. It's one of the areas
23 we've identified as a possible crevice and location
24 for inspection.
25 MEMBER RICCARDELLA: Most operating PWRs

have replaced steam generators at least once. In the worst case if some degradation mechanism comes up that we don't know about, is this replaceable or do you have to basically replace the whole unit?

MR. SEXTON: NO, this is not replaceable. There's no flanges to remove just the steam generator from the module.

MEMBER RICCARDELLA: Yes, so you'd basically come in with a new -- at least the upper part of the module?

MEMBER CORRADINI: So you'd have to replace the whole module? That's what I'm not sure about.

MR. SEXTON: Yes, if you had a steam --

MEMBER CORRADINI: Of the core.

MR. SEXTON: -- generator issue. As you can see, it's a room. The steam generator is welded right to things like the pressurizer. And the containment vessel is attached to that. So if we were to come to that, perhaps there are some parts you could save, but look at it of course it's attached to the pressurizer and the baffle plate. And there's many features that --

MEMBER CORRADINI: But you wouldn't have to replace the lower part where the core is, right?

1 MR. SEXTON: No.

2 MEMBER CORRADINI: Just --

3 MR. SEXTON: Not necessarily. So there

4 are some parts that have flanges in between.

5 MEMBER CORRADINI: Or the chimney. The

6 chimney is not part of this. It's separately sitting

7 on top of the core, is it not?

8 MR. SEXTON: Yes, they are not welded

9 together. They're supported against each other.

10 MEMBER CORRADINI: All right. Thank you.

11 MR. SEXTON: Okay. So we're going to move

12 on to a couple other features of the steam generator.

13 One key feature is supports for the tubes. So we've

14 got some images here to walk through how they're

15 supported.

16 The upper left image shows you that tubes

17 are supported in the vertical direction by tabs.

18 These tabs are visible in the lower left image and

19 each tube as it passes by a section of supports is

20 supported by three tabs in the vertical direction.

21 The upper left image also shows that tubes are

22 supported in the horizontal direction by plates,

23 right? Each time it passes through a tube support

24 there's a plate on either side of it that restricts

25 its motion horizontally.

1 Lastly, there's the axial direction of the
2 tubes which the helical structure itself kind of
3 arrests, right? It wraps around and each time it
4 wraps through it contacts another support. So if you
5 try to move the tube axially, it moves against the
6 other supports.
7 And there's also friction where you
8 compact the tube between its supports and pins such
9 that it won't move axially. So we believe we've
10 developed tube supports that restrain all the degrees
11 of freedom of the tube at the support locations so
12 that we don't have any unrestrained motion.
13 And then we also have looked at flow-
14 induced vibration which you'll discuss with our other
15 staff in Chapter 3.9.2, which is excitation from the
16 flow, things like fluid elastic instability, vortex
17 jetting and turbulent buffeting.
18 MEMBER RICCARDELLA: And I'm sure you
19 looked at thermal expansion. Do you have any
20 differential thermal expansion issues.
21 MR. SEXTON: Yes, we have a few different
22 materials and radial thermal expansion and vertical
23 thermal expansion, but helical coil is obviously great
24 at dealing with vertical expansion. The tubes in
25 general are great at dealing with expansion because

1 that's how you deal with expansion, is you coil. And
2 the tolerances are all picked for the radial stack-up
3 for hot and cold conditions both. And so the tube
4 supports are contacting the riser at the hot condition
5 and supporting it.
6 CO-CHAIR BALLINGER: If Member Harold were
7 here, he would right now be short of breath because at
8 San Onofre, where they had 690 steam generator tubes,
9 one plant had a serious problem and the other plant
10 with the same steam generators didn't have a problem.
11 And the reason was a very small difference in the way
12 the tolerances were set up in the system where one
13 experienced accelerated wear; the other one didn't.
14 And so I look at this design and I'm
15 saying from a mechanical point of view and from a
16 fatigue point of view this you can analyze, but from
17 a wear point of view the San Onofre experience tells
18 us that there was a threshold somewhere which we
19 didn't know about. And that's clearly identified in
20 the code that if you think that you're going to be
21 outside some realm, you got to do some tests.
22 So where are you guys on this issue? Have
23 you sort of absorbed the San Onofre issue or have you
24 just discounted it because, well, it's a u-tube steam
25 generator and we don't really care?

1 MEMBER RICCARDELLA: Well, that's order of
2 magnitude different flow rates we're talking about,
3 aren't we?
4 CO-CHAIR BALLINGER: Yes, more than an
5 order of magnitude.
6 MEMBER RICCARDELLA: Yes, yes, yes.
7 CO-CHAIR BALLINGER: But that just means
8 the vibrations are different.
9 MEMBER CORRADINI: Well, I was -- that's
10 why I was trying to calculate the Reynolds number. I
11 don't think you're going to get any sort of vortex
12 shedding over these things. I'm more worried about
13 the internal scheme flow and its effect on any sort of
14 vibration, not the external flow. The external flow
15 is super slow.
16 MR. SEXTON: So I'd say that experience
17 like San Onofre is important to us for design. And we
18 think one of the flaws there was that there was a
19 whole degree of freedom that was unrestrained, right?
20 The tube was able to move.
21 So what we're trying to do is --
22 CO-CHAIR BALLINGER: But they had the same
23 lack of degree of freedom in two plants that were not
24 only identical. So that issue was normalized out, if
25 you will --

1 MR. SEXTON: Sure.

2 CO-CHAIR BALLINGER: -- between the two

3 plants.

4 MEMBER RICCARDELLA: Well, but the real

5 lesson was Appendix B would tell you that if you don't

6 have --

7 MR. SEXTON: Oh, yes.

8 MEMBER RICCARDELLA: -- data, you test.

9 And I guess the question, the relevant question is

10 what are your plans to do testing of this?

11 MR. SEXTON: Yes, great question, and that

12 will be covered largely in the CVAP chapter. But what

13 I can tell you is that --

14 PARTICIPANT: What chapter?

15 MR. SEXTON: Sorry, 3.9.2. Comprehensive

16 Vibration Assessment Program, CVAP. We've looked at

17 excitation from the primary and secondary side. We've

18 looked at the modes of the structure. And we have

19 test facilities. TF1 and TF2 have vibration purposes

20 as well aside from just looking at pressure drop and

21 heat transfer coefficients. And then we have a TF3

22 test facility that we're working on to look at it even

23 further. So, yes, test facilities we think are

24 important.

25 MEMBER SKILLMAN: Colin, let me ask this

1 question: For the tubes with the different lengths
2 and in the different -- four different groups the --
3 if one were to take a single tube and affix it at say
4 the top tube sheet and begin to take it down through
5 the shell to its final location and then affix it to
6 a second tube sheet, that tube would have twisted as
7 that spiral is developed.
8 So my question is in the manufacturing
9 process are the tubes actually spiraled as they are
10 bent into the helix so that there is no torsional
11 residual? See what I'm saying? It's like laying --
12 MR. SEXTON: Yes.
13 MEMBER SKILLMAN: -- a rope. You have to
14 lay the rope in order for it to go smoothly. You
15 actually have to lay that tube with torsion -- yes,
16 twist it so that when it finally rests there is no
17 residual torsional memory.
18 MR. SEXTON: Right. We work with vendors
19 to look at steam generator fabrication. We continue
20 to do that into the future, make sure we're doing the
21 best we can as we approach fabrication. And in
22 general what we do is we come in and do the weld at
23 the end, meaning that the tube is in its relaxed
24 position in the orientation that you weld it into the
25 final plenum.

1 MEMBER SKILLMAN: What is the maximum
2 depth of tubes in the final configuration? Are the
3 four deep, eight deep? How many deep can they be?
4 MR. SEXTON: Can you repeat that?
5 MEMBER SKILLMAN: Sure. In this image you
6 show two rows laying against the shell.
7 MR. SEXTON: Yes.
8 MEMBER SKILLMAN: About how many rows deep
9 can the final configuration be?
10 MR. SEXTON: There are 21 columns.
11 MEMBER SKILLMAN: Thank you.
12 MEMBER BLEY: So the bundle is completely
13 filled with annulus, or comes really close?
14 MR. SEXTON: It comes very close. We
15 don't want to create a bypass where primary flow
16 doesn't flow through. There's a little bit of space
17 on each side for supports, but it's about enough space
18 to fit one of the support plates, which you saw in
19 this figure.
20 MEMBER SKILLMAN: Thank you.
21 MEMBER SUNSERI: It's a fascinating design
22 and I just have all kinds of questions, but one final
23 one from me: So on the feed water side as the water
24 transitions from being fluid to vaporizing with some
25 mixture of water and steam and then super-heated

1 steam, have you analyzed the velocities for erosion in
2 that, because you're constantly venting that steam
3 flow, right?
4 MR. SEXTON: Yes, we've looked at flow
5 accelerated corrosion in the tubes and found that it
6 -- we didn't expect it to be a problem.
7 MEMBER SUNSERI: Okay.
8 MR. SEXTON: Moving onto the last
9 important design feature we'd like to highlight.
10 Sometimes when you have parallel channels with two-
11 phase flow you can develop flow oscillations where
12 there's oscillatory behavior of phase change and some
13 situations can even have backwards flow and things
14 like that.
15 CO-CHAIR KIRCHNER: And there's different
16 length tubes.
17 MR. SEXTON: Different length tubes, yes.
18 CO-CHAIR KIRCHNER: -- that can actually
19 induce it --
20 MR. SEXTON: That's right.
21 CO-CHAIR KIRCHNER: -- if you don't do
22 what you're doing here.
23 MR. SEXTON: Right. So what we've done to
24 mitigate flow oscillations in the tubes is apply a
25 large hydraulic loss at the end of the inlet of the

1 tube in the feed water part, which we call the flow
2 restrictor. And we've done some testing at our TF1
3 facility to see how much loss you need to establish in
4 the parallel channels at the inlet before you
5 eliminate that flow oscillation, and we've done some
6 testing of our flow restrictor to confirm that it has
7 the losses that we think it does when we insert it in
8 the tube to limit our flow oscillations in the
9 secondary side.
10 MEMBER MARCH-LEUBA: So it's all done
11 experimentally? No analysis?
12 MR. SEXTON: Oh, no. Sorry. TF1 is a
13 facility, a test facility --
14 MEMBER MARCH-LEUBA: Yes.
15 MR. SEXTON: -- where a code was validated
16 using the performance of varying inlet losses. That
17 code is a version of RELAP5 and it is then applied to
18 the full design to assess whether or not there would
19 be flow oscillations.
20 MEMBER MARCH-LEUBA: RELAP5 is notoriously
21 bad at predicting stabilities.
22 MR. SEXTON: And that's why we --
23 MEMBER MARCH-LEUBA: It's notoriously bad.
24 MR. SEXTON: -- use validation. Right, we
25 use a test facility to validate that it is predicting

1 what we think it will predict and then applying that
2 to the design.
3 MEMBER MARCH-LEUBA: So you developed
4 oscillations and RELAP5 was able to predict the onset?
5 MR. SEXTON: Yes, that's the process of
6 validation. I wasn't the person to do it so I can't
7 talk to it in depth. But, yes, the idea was that we
8 don't just blindly use RELAP5. We do a test facility
9 and get RELAP5 to predict that performance and then
10 use that code.
11 MEMBER MARCH-LEUBA: How much margin do
12 you have?
13 MR. SEXTON: This isn't a situation where
14 there's margin. Our goal here is to keep pressure
15 oscillations under 10 percent in the tubes.
16 MEMBER MARCH-LEUBA: Are you saying you
17 can have a u-tube oscillation if you don't reverse
18 flow? If it establishes --
19 MR. SEXTON: I -- yes.
20 (Simultaneous speaking.)
21 MEMBER MARCH-LEUBA: -- flow.
22 MR. SEXTON: I was just referring to that
23 there's not -- that's our acceptance criteria, right?
24 So keep it under 10 percent.
25 MEMBER MARCH-LEUBA: And typically be

worse at low flow more than at high flow?

MR. SEXTON: Yes.

MEMBER MARCH-LEUBA: Have you consulted with the guy that did your stability LTR about that, because he knows a lot about that. The author of the stability LTR. It would be nice if you consult with him to -- pay him for a couple of hours and make sure that you did it right.

MR. SEXTON: Yes.

MEMBER RICCARDELLA: Could you make those flow restrictors variable? I mean, not in real time, but I mean, if you found you were getting oscillations, could you take the cover off and go in and adjust it?

MR. SEXTON: So they -- the design you see here is removable and inspectable and the -- we've chosen a number of expansions and contractions to specify the flow loss you want. So, yes, there's a lot you could do to change the flow loss, but of course it would be a totally different component that you would replace it with.

MEMBER SKILLMAN: Are there 1,380 of these?

MR. SEXTON: Every tube is equipped with a flow restrictor. There are 1,380.

1 MEMBER SKILLMAN: How do you make sure
2 that the bolt doesn't come loose? It's a cantilever.
3 It's a long rod and any slight movement is going to
4 impart a bending moment right at the junction there.
5 MR. SEXTON: Yes, we have some people on
6 the phone that could probably talk to that. It's a
7 complex design feature with a support plate where
8 you're pushing these through the plate and bolting
9 them to that plate. So I think we've thought about
10 that attachment pretty carefully, but I don't
11 personally know. We could have someone speak to it,
12 if you like.
13 MEMBER SKILLMAN: I think --
14 CO-CHAIR KIRCHNER: To elaborate on Member
15 Skillman's question, how tight is the fit of these --
16 these look like rings that fit within -- this is the
17 -- it's within the tube sheet length of the tube, so
18 these are what, four inches long, five inches long?
19 MR. SEXTON: They're a little longer than
20 that.
21 CO-CHAIR KIRCHNER: Oh, longer than that
22 to connect them on one end? What we're seeing in that
23 schematic and also in your SAR, how loose are they
24 inside there?
25 MR. SEXTON: I don't have that number in

1 front of me either and we could again get someone on
2 the phone to talk about the clearances.
3 CO-CHAIR KIRCHNER: Well, like Member
4 Skillman is suggesting if you get a little bit of an
5 oscillation going --
6 MR. SEXTON: Oh, they have been assessed
7 for --
8 (Simultaneous speaking.)
9 CO-CHAIR KIRCHNER: -- sit there and --
10 (Simultaneous speaking.)
11 MR. SEXTON: -- leakage flow instability
12 which is a type of vibration. So that's one of the
13 components in our Comprehensive Vibration Assessment
14 Program.
15 CO-CHAIR KIRCHNER: Okay.
16 MR. SEXTON: So leakage flow instability
17 is that situation where you have a narrow gap and flow
18 comes through and it bangs it back and forth. We have
19 some equations from text books for when that does and
20 does not occur and have assessed these components and
21 found them to be not susceptible to leakage flow
22 instability.
23 MEMBER CORRADINI: So can I ask just a
24 slightly different question? Why not just an orifice?
25 This looks awfully complex. Why not just simply have

1 an orifice plate? What am I missing? Not that I'm
2 going to design your thing. I'm just trying to
3 understand.
4 MR. SEXTON: I can tell you it's an
5 extremely complex design process. An orifice for
6 instance you have to attach in the tube. We're trying
7 to avoid attachment to the tube. We're trying to
8 ensure inspect-ability. There's a lot of design
9 requirements that go into getting this thing there
10 where it can be pulled out and inspected. And it
11 would be a story we could tell all day long about
12 choices we make, but it's a hard problem and we have
13 the design we have based on trying to consider all the
14 options on the table.
15 MEMBER SKILLMAN: But it looks like to
16 inspect you must take the entire mounting plate off
17 and with it all 345 restrictors.
18 MR. SEXTON: That's the feature. That's
19 how we get them out of there and are able to inspect
20 them.
21 MEMBER SKILLMAN: That's a heavy piece of
22 gear.
23 MR. SEXTON: Lots of heavy pieces of gear
24 in this reactor.
25 MEMBER SKILLMAN: Probably why you're

1 going to inspect the tubes from the to down, too,
2 right? You don't --
3 (Simultaneous speaking.)
4 MR. SEXTON: Oh, no, not necessarily. We
5 would pull these out, but I think lifting it -- you
6 know, we have -- we're going to develop a lot of
7 procedures for how to move things in and out in the
8 dry dock and get them to where we want to inspect
9 them.
10 MEMBER REMPE: So don't you need to be a
11 little more precise? You're not developing
12 procedures. Aren't you going to have the COL
13 applicant --
14 MR. SEXTON: You're right.
15 MEMBER REMPE: -- develop procedures?
16 MR. SEXTON: I should have been more
17 precise.
18 MEMBER REMPE: Yes, I think so.
19 MR. SEXTON: All operational aspects are
20 up to the COL applicant to work through and develop.
21 MEMBER SKILLMAN: It's like picking up a
22 hedgehog.
23 (Laughter.)
24 MEMBER RICCARDELLA: This whole thing
25 about the COL applicant I think is a red herring. I

1 mean, if NuScale weren't around, there is not going to
2 be a COL, right? I mean, why are we beating around --
3 beating that thing to death?
4 MR. RAD: Can I address that topic in
5 general? So --
6 MEMBER CORRADINI: You are?
7 MR. RAD: Am I on?
8 MEMBER CORRADINI: Yes, you're good to go.
9 MEMBER REMPE: Say your name.
10 MEMBER CORRADINI: You're good to go.
11 MR. RAD: Oh, sorry. I'm Zackary Rad,
12 Director of Regulatory Affairs for NuScale Power.
13 So this is a -- seems to be a common topic
14 about items that we've listed as we move forward into
15 the COL application process. So in general 52.47,
16 which is sub-part -- 10 CFR 52.47, which is the scope
17 requirements for sub-part Charlie for design
18 certifications is heavily focused on the design. 10
19 CFR 52.72, which is in -- I'm sorry, that's sub-part
20 Bravo. Sub-part Charlie for COL applicants includes
21 operational programs and procedures, which are not
22 included largely in the design certification portion.
23 So essentially what I'm saying is that
24 operational programs and procedures are outside the
25 scope generally speaking of the design certification

1 process. But because it's forwarded to the COL
2 application stage doesn't mean NuScale will be absent
3 from the process. We've got a vested interest in
4 helping our COL applicants be successful because
5 that's actually how we're successful. We didn't do
6 this just to make this application.
7 CO-CHAIR KIRCHNER: Colin, we're not here
8 to help design your facility, but we -- sometimes we
9 can't restrain ourselves. So I'd just like to ask on
10 this mounting plate, how many bolts are there to mount
11 that plate? You've got 345 tubes. How many stud
12 bolts do you have to deal with to remove the flow
13 restrictor mounting plate?
14 MR. SEXTON: I don't have that information
15 in front of me.
16 CO-CHAIR KIRCHNER: A dozen or something?
17 MR. SEXTON: I don't actually know. I
18 haven't dealt with this component in a lot of detail,
19 but again we could get someone on the phone to answer
20 that question, if you'd like.
21 CO-CHAIR KIRCHNER: It's -- no, it's a
22 takeaway thing. That's all right. Thank you. Keep
23 going.
24 MR. SEXTON: Okay. This is our last slide
25 on the steam generator, so we're going to keep moving

1 through.

2 The next component of the reactor coolant

3 system is the piping. Piping is NPS 2. All the pipes

4 for all the connections between the reactor pressure

5 vessel and the containment which goes on the support

6 systems are NPS 2, schedule 160, 304/304L dual-

7 certified stainless steel pipe.

8 CO-CHAIR KIRCHNER: Two-inch?

9 MR. SEXTON: NPS 2, two-inch, yes.

10 The RCS piping is the pressurizer spray

11 line which comes in and delivers spray to the

12 pressurizer. That's a branch off of the injection

13 line. The injection line delivers clean coolant that

14 has gone through the CVCS system and new coolant to

15 the reactor coolant system. And there's the RCS

16 discharge which is a takeout in the down comer that

17 pulls RCS to the CVCS. Or if you're going to let down

18 some coolant, that's where you take it out.

19 And the last pipe is the high point

20 degasification piping which is a line at the very top

21 that allows you to purge some of the gas base of the

22 pressurizer if you have found non-condensable gases to

23 be impeding spray function.

24 CO-CHAIR KIRCHNER: And is it correct to

25 draw the conclusion that for all that piping there are

1 no valves, no flanges between containment and the
2 reactor pressure vessel, or are there breaks in those
3 lines? Are those --
4 MR. SEXTON: There's no valves that are in
5 the containment on those lines.
6 CO-CHAIR KIRCHNER: Yes.
7 MR. SEXTON: The valves are outside of
8 containment.
9 CO-CHAIR KIRCHNER: So they're welded from
10 inside containment vessel to outside reactor pressure
11 vessel?
12 MR. SEXTON: Correct.
13 CO-CHAIR KIRCHNER: Okay.
14 MEMBER RICCARDELLA: PWRs have had a lot
15 of thermal fatigue issues with letdown charging
16 nozzles. You're aware of those, I suppose?
17 MR. SEXTON: Yes, we've done preliminary
18 fatigue analyses of the letdown charging.
19 Particularly charging is the one that changes
20 temperature fast. And we've counted up our cycles for
21 how many times we want to add boron and calculated the
22 change in temperature and have taken a look and got
23 our usage under the limit.
24 MEMBER RICCARDELLA: Yes, what we found
25 was that we were getting a lot more cycles than were

1 originally designed for in the current PWRs.

2 MR. SEXTON: Yes, we've done our best to

3 take a look at that operating experience and look at

4 what load following does to how many cycles you have

5 to take if you're doing things like controlling boron

6 on a daily basis.

7 CO-CHAIR KIRCHNER: And again, the

8 pressurizer spray is continuous?

9 MR. SEXTON: A very small amount of

10 pressurizer spray is continuous, not a pressure

11 control amount, but we want to keep that line liquid-

12 filled. So we always flow a little bit through.

13 There's six bolts on that plate, if you're

14 interested.

15 Okay. We are moving onto the decay heat

16 removal system. This is one of our safety-related

17 heat removal systems. We're going to go over the

18 high-level features of it here and then take a look at

19 some of its performance characteristics and how it

20 works and --

21 MEMBER MARCH-LEUBA: Before you start,

22 while you go through this, there is a description in

23 the chapter about how it gets filled from the feed

24 water. I didn't understand what it says. You can

25 explain better?

1 MR. SEXTON: Yes, when I get a figure I
2 can explain it better.
3 So it's a two-phase natural circulation
4 system. That means it's got a boiler and a condenser.
5 The boiler is low; the condenser is high. When you --
6 MEMBER CORRADINI: I'm sorry. I actually
7 have a question, but I don't want you to go back in
8 slides.
9 So let's just say -- well, let me ask the
10 question a little differently: Is there an
11 operational regime for the module with the steam
12 generator that you would operate the steam generator
13 even though you didn't have proper level up to the top
14 of the overflow into the --
15 MR. SEXTON: The riser?
16 MEMBER CORRADINI: The riser. Thank you.
17 MR. SEXTON: No, we control level at all
18 times into the pressurizer.
19 MEMBER CORRADINI: Well, yes, I'm aware of
20 that, but I'm asking a slightly different question.
21 I'm saying in off-normal behavior you would isolate
22 the steam generator and turn to the decay heat removal
23 system. You would never expect for reflux
24 condensation through the steam generator as a method
25 of heat removal?

1 MR. SEXTON: We have a slide about this at
2 the end of the DHRS section and we can go through
3 how --
4 MEMBER CORRADINI: Okay. Fine. Thank
5 you.
6 MR. SEXTON: -- it goes to that riser.
7 MEMBER CORRADINI: Thank you very much.
8 MR. SEXTON: Okay. So the boiler for this
9 system is the steam generator and the condenser is the
10 decay heat removal condenser. That condenser is
11 submerged in the ultimate heat sink, which is our
12 reactor pool. A system like this requires a closed
13 loop, a trapped inventory. So the way we get that
14 trapped inventory is we close our containment
15 isolation valves for the feed water and steam systems
16 to keep a certain amount of water in this loop, which
17 is going to spin between the boiler and the condenser.
18 MEMBER MARCH-LEUBA: And that's the part
19 I'm interested on. When we move to the next slide I
20 want you to tell me what the water level is, how
21 you're going to know how much water you have in there.
22 MR. SEXTON: Sure. This goes back to our
23 steam generator discussion. We have two independent
24 single-failure proof trains. So one train of the DHRS
25 is associated with one of those steam generators and

the other is associated with the other. There's no cross-connections.

Each train has two parallel actuation valves and two isolation valves that we credit. One of them is the main isolation valve and another is a downstream valve. So each one can accommodate a single active failure of a component and still do its job.

The last feature is that the design pressure of this piping, even though it's on the secondary side, is 2,100 psia, meaning that if you had a break in a tube that moved primary coolant into the secondary, it wouldn't over-pressurize. That pressure would maintain below the design pressure of this component.

MEMBER MARCH-LEUBA: I don't see an SRV there, a safety relief valve on the DHRS.

MR. SEXTON: That's right, and that's associated with that feature. So if you -- the heat input comes from the RCS and the RCS is protected by safeties.

MEMBER MARCH-LEUBA: And that's code?

MR. SEXTON: Say again?

MEMBER MARCH-LEUBA: That is code, satisfies code to have a closed system with --

1 MR. SEXTON: Yes. Yes, there is a -- you
2 can justify having no local feature when there's no
3 possible way to bring it up over that.
4 MEMBER MARCH-LEUBA: Okay.
5 MR. SEXTON: Okay. That's all the
6 features on that slide. Let's go onto this one.
7 So we're going to look at the thermal
8 hydraulic performance, just talk about what affects
9 it, but we can talk through kind of the fill thing
10 first here.
11 MEMBER MARCH-LEUBA: Point where the water
12 level is in the second -- on the DHRS. What is the
13 water level?
14 MR. SEXTON: Yes, the water level goes all
15 the way to the top. So the important thing to know
16 about the DHRS loop with closed actuation valves -- so
17 if we look here, you see these actuation valves?
18 They're normally closed.
19 MEMBER MARCH-LEUBA: Yes.
20 MR. SEXTON: And when you close them, you
21 trap a bunch of steam in this pipe potentially, right?
22 MEMBER MARCH-LEUBA: Or liquid.
23 MR. SEXTON: Or liquid.
24 MEMBER MARCH-LEUBA: But where does it
25 come from?

1 MR. SEXTON: Either way. Whatever it is.
2 Let's say it's steam, right? So it's not filled,
3 right? It doesn't have any water in it yet. What's
4 going to happen to that steam? It's all going to
5 condense, right? The pool is surrounding this pipe.
6 So as you wait a little while, you're going to
7 collapse the steam that was trapped in that dead end
8 and it's going to be replaced with feed water. So it
9 basically sucks it up like a straw, right, to the very
10 top. And that's the fill function. You can be
11 assured that when you don't have it non-condensables,
12 which we don't have non-condensables when we're
13 starting up -- we purge it of non-condensables and
14 operate with this two-phase liquid and steam
15 environment. That when you close it, it's going to
16 consume that steam through condensation and end up as
17 a pure liquid environment all the way up to that
18 valve.
19 MEMBER MARCH-LEUBA: During normal
20 operation the cold leg is always connected to the --
21 MR. SEXTON: Yes, there's no valve here.
22 So this section that comes out of the bottom of the
23 condenser; we call it the condensate line of the DHRS,
24 tees right into the feed water line with no valve. So
25 that whole section is filled with water and it won't

flow because flowing away would cause a void at the top and that can't exist in a cold environment.

MEMBER MARCH-LEUBA: And you don't have a tree core at the top to make sure even if no condensables were to happen it would disappear?

MR. SEXTON: No, we don't have a keep fill system. What we do have is the expectation that there's no introduction and then a sensor to pick up if there were introduction. So basically an operability requirement.

MEMBER MARCH-LEUBA: What sensor?

MR. SEXTON: A level sensor right near the valve. And they're are switches. So they're just installed right at the very top and they pick up whether it's vapor or liquid right outside the sensor. And so if a bubble were to develop, it would uncover those two sensors and you would have a signal that you didn't have operability.

MEMBER MARCH-LEUBA: Then you open the valve and flush it?

MR. SEXTON: You'd go into tech spec space. It's an operability tech spec, so you would have some shutdown requirements if you didn't fix it before some amount of time and --

MEMBER MARCH-LEUBA: Just need to open the

1 valve?

2 MR. SEXTON: Well, you're not going to

3 open the valve if you have control of the plant. You

4 don't have to burp it. And burping it introduces some

5 water into the steam line that we don't want to do

6 that. So we -- but the important thing to note is

7 that we don't have a mechanism for introducing non-

8 condensable gas to that region. The feed water is low

9 in non-condensable gas. It's just passing by that

10 loop. We really can't deliver non-condensable gas

11 into that section. And if we did, we would detect it

12 and stop operating due to a tech spec.

13 MEMBER CORRADINI: But just to follow

14 through, in terms of setting the system up you've got

15 to essentially, as you call it, burp it to make sure

16 you vent -- you've got to have a vent. So what is the

17 venting process to minimize non-condensables?

18 MR. SEXTON: So during a refueling you

19 start with the DHRS valves open and the whole system

20 water solid. And then from there you transition it to

21 a two-phase arrangement and trap some inventory in one

22 of them and -- so you don't have to burp it. You just

23 have to control that environment from the get-go

24 starting with a water solid condition. So at some

25 point you're going to let some steam develop and at no

point are you introducing non-condensable gases.

MEMBER CORRADINI: Oh, so the method of startup is to actually fill it water solid --

MR. SEXTON: We move it --

MEMBER CORRADINI: -- close the valves and then let it --

MR. SEXTON: -- in what we call wet lay-up.

MEMBER CORRADINI: I'm sorry?

MR. SEXTON: Sorry. Go ahead.

MEMBER CORRADINI: No, no. I'm just trying to understand. That's all. So you go ahead and finish. I'm sorry.

MR. SEXTON: We move it to the refueling area in what we call wet lay-up where the secondary side is water solid.

MEMBER CORRADINI: Okay. And then it's yet to be determined what the allowable non-condensable fraction is in there? In other words, there's always going to be something. You never get rid of non-condensables. You always think you do, but you never do completely. So is thee a minimum amount that allows it still to operate? Has that been analyzed?

MR. SEXTON: Yes. Yes, that's what I was

trying to describe. We've analyzed performance of the system with non-condensables to those level sensors.

MEMBER CORRADINI: Ah, okay. I missed that. Excuse me.

MR. SEXTON: So if you were to exceed that amount, you'd be inoperable. If you're less than that amount, it's a condition we've analyzed.

MEMBER CORRADINI: Okay.

MR. SEXTON: Okay. So the two main drivers are performance. They're just the heat sink and the heat source.

MEMBER MARCH-LEUBA: Well, wait, wait. If I could -- so you start with that line completely filled with solid liquid?

MR. SEXTON: That's right.

MEMBER MARCH-LEUBA: And maybe a small amount of non-condensable which we'll ignore. Now you open the valve. What happens?

MR. SEXTON: Yes, so you close these valves and open these valves in the configuration that's shown right here.

MEMBER MARCH-LEUBA: The whole loop is now liquid solid?

MR. SEXTON: Oh, no. No, sorry. The steam generator had a bunch of steam in it, right?

1 MEMBER MARCH-LEUBA: Yes.
2 MR. SEXTON: So there's a bunch of void
3 all the way up through the steam line and in the upper
4 portion of the steam generator. So --
5 MEMBER MARCH-LEUBA: Where is the liquid
6 level going to be?
7 MR. SEXTON: Well, it's different spots in
8 different sides of the loop, so you're condenser is
9 going to have a higher liquid level than your steam
10 generator. And that's the hydrostatic head that
11 drives flow around the loop.
12 MEMBER MARCH-LEUBA: So there is not --
13 the bottom line is going to be below the top of the
14 line?
15 MR. SEXTON: Yes, the water level --
16 MEMBER MARCH-LEUBA: So it there is now
17 going to be natural circulation. You're going to be
18 boiling steam on the steam --
19 MR. SEXTON: Two-phase circulation.
20 MEMBER MARCH-LEUBA: -- and then condense
21 it from this and then it drips down into the --
22 MR. SEXTON: That's correct.
23 MEMBER MARCH-LEUBA: So why don't we have
24 those things on the top?
25 MR. SEXTON: What things on what top?

1 MEMBER MARCH-LEUBA: The heat centers.
2 That's where your condensing the steam.
3 MR. SEXTON: Oh.
4 MEMBER MARCH-LEUBA: You're condensing the
5 steam on the tiny pipe.
6 MR. SEXTON: This is plenty of hydrostatic
7 head, so this was a nice place to locate them on the
8 vessel. And this 9 foot, 10 foot of elevation above
9 the bottom of the steam generator is plenty to drive
10 two-phase circulation.
11 MEMBER MARCH-LEUBA: Yes, but if you were
12 to have a little bit more liquid, you will cover the
13 complete heat exchanger and you will not have a heat
14 exchanger surface to condense the steam. And you're
15 guaranteed to condense the steam on the tiny pipe on
16 the top.
17 MEMBER CORRADINI: I think what he's
18 asking is why isn't it higher?
19 MR. SEXTON: It isn't higher because it
20 doesn't need to be higher to drive circulation for
21 two-phase flow. It has enough hydrostatic head to
22 drive circulation for the power that we want and this
23 is a convenient place to place it on the reactor
24 vessel where we have a spot to attach it.
25 MEMBER MARCH-LEUBA: You evaluated if

1 there is a condition -- if you transfer at lower
2 power, for example, so there's not that much steam in
3 the steam generator, that you can overfill it above
4 the heat exchangers?
5 MR. SEXTON: When you are filled up in a
6 water solid the DHRS is not operable.
7 MEMBER MARCH-LEUBA: But then you still
8 need to remove the decay heat?
9 MR. SEXTON: Right, so we do a transition
10 where we have a heat removal mechanism where we fill
11 the containment with water and we do kind of a
12 handshake between DHRS being operable and not being
13 operable.
14 MEMBER MARCH-LEUBA: But if you were to
15 overfill the DHRS, it will never work?
16 MR. SEXTON: It would have significantly
17 degraded performance and not necessarily fulfill its
18 function, right. It's a two-phase circulation system.
19 So if you made it try to be a single-phase circulation
20 system, it's going to be --
21 MEMBER MARCH-LEUBA: Which conditions can
22 you overfill the DHRS?
23 MR. SEXTON: We have a whole set of
24 analytical limits of steam, pressure, super-heat for
25 the DHRS such that if we have an overfill event or too

1 much steam coming out the end, or a turbine stop valve
2 closure, we're going to hit one of our analytical
3 limits and close our valves and preserve an inventory
4 where it's functional. So we have looked at a broad
5 array of perturbations.
6 MEMBER MARCH-LEUBA: But then there is too
7 much inventory. What if you have too much inventory
8 in a DHRS loop?
9 MR. SEXTON: You can't get to a situation
10 where you have too much inventory because you're going
11 to hit an analytical limit that's a safety function of
12 the trip system that will initiate DHRS operation
13 before you overfill.
14 MEMBER MARCH-LEUBA: Operating at 10
15 percent power?
16 MR. SEXTON: Yes, the whole range. Yes,
17 you'll see it in Chapter 15. We've looked at a lot of
18 scenarios and made sure that our set-points for our
19 module protection system are going to initiate the
20 DHRS while it still has an appropriate inventory.
21 MEMBER MARCH-LEUBA: What section in
22 Chapter 15, because I haven't seen that one.
23 MR. SEXTON: I don't know the section. We
24 can --
25 MEMBER MARCH-LEUBA: What's it called?

1 MR. SEXTON: There's a lot of different --
2 the DHRS responds to several Chapter 15 events, right?
3 The overfilling of the secondary -- increase in
4 secondary flow event, decrease in secondary flow
5 event. So it's spread out between chapters. There's
6 a lot of events where it might respond to.
7 MEMBER MARCH-LEUBA: Okay. So you
8 probably haven't done a thorough analysis of what if
9 you overfill it?
10 MR. SEXTON: I think we have looked at the
11 bounding events that are overfilling events. Like too
12 much feed water, right, is the main event --
13 MEMBER MARCH-LEUBA: Yes.
14 MR. SEXTON: -- and shown that we get to
15 our trip set-point before we overfill it out of its
16 operable range.
17 MEMBER CORRADINI: So just take us through
18 that one just so that -- a little bit. So if I have
19 an over-specified feed water flow, I would start
20 filling the generator, and one of the limiting
21 conditions would be worrying about essentially
22 flooding the DHRS. So you would trip the reactor and
23 take it down through a -- am I getting it --
24 MR. SEXTON: Yes, yes. You would reach
25 the set-point and that would cause the DHRS to actuate

1 and you would come down.

2 MEMBER CORRADINI: Oh, I see.

3 MR. SEXTON: You would isolate the system.

4 MEMBER MARCH-LEUBA: Okay. I don't

5 understand this. Let's say you're starting up. You

6 don't have any heat --

7 MR. SEXTON: Yes.

8 MEMBER MARCH-LEUBA: -- and you have feed

9 water. You fill up your steam generator with liquid.

10 MR. SEXTON: Right.

11 MEMBER MARCH-LEUBA: You're not scramming?

12 MR. SEXTON: No. No.

13 MEMBER MARCH-LEUBA: At that point the

14 DHRS opens? You isolate and you cannot remove decay

15 heat?

16 MR. SEXTON: Right. And at that point our

17 containment is filled with water such that it's the

18 heat removal pathway.

19 MEMBER MARCH-LEUBA: You will have to go

20 to the backup removal system which is fill up with

21 containment?

22 MR. SEXTON: No, no. It's passively

23 filled. It's sitting there filled the whole time and

24 it's the primary system at that time.

25 MEMBER MARCH-LEUBA: Okay. The

1 containment is regulated? You're --

2 (Simultaneous speaking.)

3 MR. SEXTON: No. No, not during normal

4 operation.

5 (Simultaneous speaking.)

6 MR. SEXTON: Yes, so -- sorry, not during

7 startup. I misspoke.

8 MEMBER CORRADINI: You guys are -- you're

9 talking over each other. You asked him about startup.

10 I think he was answering you about startup.

11 MR. SEXTON: Yes, that's correct. So in

12 a startup configuration when you're moving the module

13 or when you've --

14 MEMBER MARCH-LEUBA: No, no, no. When you

15 are starting up, you're getting to five percent power.

16 MR. SEXTON: Right. So we're bringing in

17 the module, right, and it's got a --

18 MEMBER MARCH-LEUBA: It's already in

19 there?

20 MR. SEXTON: It's in there. It's got full

21 containment where there's a lot of water in the

22 containment and there's a lot of water in the

23 secondary system.

24 What we do during startup is we boil down

25 one of the steam generators, right, until it has an

1 inventory that's appropriate for DHRS operation. And
2 this is a complicated issue that we were just working
3 through making sure that we have a clear pathway where
4 this works. So it will be a little bit hard to
5 describe here.
6 But what we do is we remove water from
7 that steam generator by boiling it off and sending it
8 to a vacuum condenser, right? When the inventory in
9 that steam generator gets to a range where the DHRS is
10 operable, right, if you were to isolate it, it would
11 have good heat removal characteristics and function as
12 a two-phase circulation system, we isolate it. So we
13 seal it off. We close the feed water reg valve and we
14 close the steam valve, right? That creates one DHRS
15 heat exchanger that is primed and ready to go. All
16 you have to do is open the actuation valves and it
17 already has the inventory that's correct in it, right?
18 Does that makes sense?
19 MEMBER MARCH-LEUBA: I see what you're
20 saying, yes.
21 MR. SEXTON: And then you -- once have
22 that confirmed, operable DHRS, you begin to drain down
23 the water level in the containment.
24 MEMBER MARCH-LEUBA: I see where you're
25 going. It's just very convoluted. Where is that

1 described?

2 MR. SEXTON: Startup procedures are not in

3 a section of the DCA.

4 MEMBER MARCH-LEUBA: Doesn't it lead to

5 Chapter 15 failures?

6 MR. SEXTON: Chapter 15 is largely events

7 operating from normal power, which is what I was

8 answering questions about before.

9 MEMBER MARCH-LEUBA: I'm sure this comes

10 a tremendous surprise that you need to put vacuum on

11 your steam generator before you can pull control rods

12 and start getting critical. It was a surprise to me.

13 MR. SEXTON: Yes. Yes, I guess I would

14 finish by saying that we are in the middle of

15 implementing this change where we changed a few set-

16 points to establish this one isolated DHRS train

17 that's operable and this other one that you control

18 with. So perhaps it's premature of me to discuss all

19 the details of it before we finalize it and issue a

20 bunch of documentation to the regulator.

21 MEMBER MARCH-LEUBA: Let me see if I can

22 summarize like Mike does. DHRS is a really good

23 design as long as you don't overfill it. To prevent

24 overfilling you have some administrative procedures

25 that will ensure that the steam generator is only half

full of water. It can never be more than 50, 60, 80 percent, whatever it is. And you ensure administratively that there is always in the DHRS loop a sufficient gas volume so you will not overfill it.

MR. SEXTON: In a transition phase during startup, that's correct.

MEMBER MARCH-LEUBA: And failing to do that is not an un-analyzed condition, NAO?

MEMBER CORRADINI: If I were him at this point I would tell him the startup procedures are being developed. They're not in the DCA. We have to talk to you later.

MR. SEXTON: That -- no. I think that is correct. We are developing the startup procedures and --

MEMBER MARCH-LEUBA: Okay. So in our letter we need to say it's an open item, that there are failure modes of the DHRS which are not developed yet.

MEMBER CORRADINI: I want to ask staff about this, but I want to make sure that we're interpreting -- because I don't want -- I think it's a bit unfair to make the applicant go off the cuff. But my impression is that this is -- startup procedures were not even critical. We're essentially

1 bringing up to pressure and temperature and
2 conditions.
3 So the -- and an analog to this, which I
4 don't think is appropriate to bring up by name, is
5 anther DCA application that we had in terms of startup
6 procedures that actually had to avoid a chimney and we
7 were worried about instabilities in the avoided
8 chimney. Some of us may remember that. Same sort of
9 thing. It's not in the DCA, but it was part of
10 startup procedures that eventually we reviewed when
11 the applicant came in front of us to finish of their
12 DCA. So this reminds me of something in the past.
13 MEMBER MARCH-LEUBA: Mike, this is an open
14 item?
15 MEMBER CORRADINI: Yes.
16 MEMBER MARCH-LEUBA: Will you -- do you
17 agree that this is an open item?
18 MEMBER CORRADINI: It's something that we
19 have a question about.
20 MS. FOSAAEN: I think -- just to summarize
21 I think we have design features that preclude us from
22 operating in an overfill situation and I think that's
23 what Colin was trying to convey. So that's why our
24 Chapter 15 analysis makes certain assumptions. Those
25 design features would prevent that operation

1 characteristic.

2 MEMBER MARCH-LEUBA: And those same

3 features are yet to be developed, or are they

4 developed? What Mike was saying is that you will have

5 an administrative control that gives you 96 hours to

6 get out of it.

7 MR. SEXTON: No, these are -- again, it's

8 premature to talk about what we're developing, but

9 these are NPS set-points and --

10 MEMBER MARCH-LEUBA: But you're in the

11 process of developing --

12 (Simultaneous speaking.)

13 MR. SEXTON: Right, but they're not

14 administrative. They're NPS safety-related protection

15 system features.

16 (Simultaneous speaking.)

17 MEMBER MARCH-LEUBA: -- about it whenever

18 you --

19 MR. SEXTON: Yes.

20 Okay. Moving on with the decay heat

21 removal system.

22 MEMBER MARCH-LEUBA: Is there any other

23 accident that will under-fill it?

24 MR. SEXTON: Under-fill accidents are

25 things like too much steam leaving and --

1 MEMBER MARCH-LEUBA: Too little liquid,
2 but nothing that would lead to full?
3 MR. SEXTON: Not enough liquid or too much
4 steam leaving. Those are the -- and, yes, things like
5 that: increase in secondary side flow, increase in
6 steam flow are Chapter 15-analyzed events. And there
7 are NPS protections that isolate the DHRS and initiate
8 it before it overfills or under-fills.
9 Okay. We've got a nominal cool down plot
10 of two trains of decay heat removal system in-
11 operation. This is a trip, a loss of feed water
12 perhaps, something like that that causes the DHRS to
13 initiate. And we're just showing this for the
14 timeline. This is about four hours of time and with
15 two trains going. It brings you down to around 350
16 degrees and starts to stabilize there. And this is
17 the kind of level at which it reaches the riser due to
18 shrinkage of the coolant from getting colder.
19 So when it starts to get cold and the
20 water level decreases and you don't have pressurizer
21 control because you're in a no power situation
22 perhaps, your DHRS is going to cool you down until
23 your primary coolant gets right to the top of the
24 riser. But it won't cool you down any more than that
25 because that would require a cooling source, and the

1 DHRS is the cooling source. So it kind of stays at
2 the riser and --
3 MEMBER MARCH-LEUBA: Why does it stop?
4 MR. SEXTON: Well, to continue to shrink
5 it would need to continue to reduce in temperature.
6 MEMBER MARCH-LEUBA: But it would still
7 condense the steam.
8 MR. SEXTON: Yes, but it's not sufficient
9 to continue reducing the temperature.
10 MEMBER CORRADINI: So say that again
11 slower.
12 MR. SEXTON: Sure.
13 MEMBER CORRADINI: That one you passed by
14 me quickly. So up to about 14,000 seconds we're
15 cooling down because we're essentially taking and
16 still allowing natural circulation in the primary
17 side, which is now the DHRS is removing the heat
18 versus the steam generator because we've isolated the
19 steam generator?
20 MR. SEXTON: No, sorry. The DHRS and the
21 steam generator work in tandem. They're part of the
22 same system. So any time you're removing heat with
23 the DHRS, you're actually transferring heat from the
24 RCS to the steam generator --
25 (Simultaneous speaking.)

1 MEMBER CORRADINI: I misspoke.

2 CO-CHAIR KIRCHNER: I think he meant the

3 isolation valves have now cut off --

4 MR. SEXTON: Yes, okay. Sure.

5 CO-CHAIR KIRCHNER: -- the steam generator

6 from the outside --

7 MR. SEXTON: The natural feed water and --

8 yes. So you've closed those valves and you're

9 transporting that steam to the DHRS condenser. And on

10 this plot up until about 8,000 seconds you're removing

11 heat fast. And that's occurring with the water level

12 high and eventually your water level decreases to the

13 top of the riser because it's cooling.

14 MEMBER MARCH-LEUBA: It's 8,000 seconds,

15 yes?

16 MR. SEXTON: Eight thousands seconds you

17 see that divergence of hot leg and cold leg, which

18 when you see a hot leg and cold leg divergence, that

19 means a reduction in flow, right, primary flow has

20 decreased. Well, it's not zero. It's moving heat.

21 So it's flowing over the top of the riser, and that's

22 the configuration that kind of stables out there past

23 four hours.

24 CO-CHAIR KIRCHNER: Another way of saying

25 that then, you hit a spot where the decay heat

generated in the core is about the same as what you can reject with the system to the ultimate heat sink.

MR. SEXTON: That is another way to say it.

CO-CHAIR KIRCHNER: And it balances itself out and it would probably keep trailing down, but very slowly from this point on.

MR. SEXTON: Right.

MEMBER CORRADINI: What is the decay heat level at -- is that the four hours-ish? Something like about a fraction of a percent, about 0.8 percent?

MEMBER MARCH-LEUBA: No, it's still one-and-a-half to two percent.

CO-CHAIR KIRCHNER: Yes.

MEMBER CORRADINI: Three hours is one percent by ANS standard. That I've memorized. At three hours it's one percent. So it's about --

CO-CHAIR KIRCHNER: That's 1.6 megawatts --

MEMBER BLEY: Yes, it's going down slowly after that.

MEMBER CORRADINI: After that. And slowly after that. But, so then everything just slowly then cools as it's limited by the decay heat?

MR. SEXTON: Yes, it's limited kind of by

1 primary circulation. You can't keep cooling down fast
2 when you can't deliver a lot of coolant to the steam
3 generators because you get below the rise. So if you
4 were to really go completely below the riser, you
5 would not be able to deliver much cooling to the steam
6 generators. But it doesn't go completely below the
7 riser. It stays right around there.
8 MEMBER CORRADINI: Oh, that's what I guess
9 I was trying to get at. So we haven't uncovered the
10 riser yet?
11 MR. SEXTON: You are at the riser level
12 and it never quite uncovers. It just kind of stays
13 there.
14 MEMBER CORRADINI: I guess I would think
15 eventually it would uncover.
16 MEMBER MARCH-LEUBA: It's going to burp,
17 burp, burp and every burp is going ploof, ploof. You
18 uncover it. I don't know if it would take 10 minutes
19 or 10 hours, but you will uncover it.
20 MEMBER CORRADINI: All right. Thank you.
21 Thank you.
22 MEMBER MARCH-LEUBA: And all that time you
23 are still producing steam which goes to the steam
24 generator and gets condensed there. And that's a lot
25 of enthalpy when it condenses. But hopefully RELAP

1 did the calculations right.

2 CO-CHAIR KIRCHNER: I want to explore that

3 a little bit further. So if you've isolated,

4 including you're not -- there's no makeup, is the size

5 of the system such that when you get down to this 400,

6 350 level the shrinkage in the primary inventory comes

7 below the baffle plate and actually comes below the --

8 what would be the outer annulus, the down comer and

9 breaks the natural circulation?

10 MR. SEXTON: Well, it's getting right to

11 that point, to the top of the riser.

12 CO-CHAIR KIRCHNER: How sensitive is that?

13 I mean, is it close or is it --

14 MR. SEXTON: Sensitive to? Can you

15 clarify?

16 CO-CHAIR KIRCHNER: I mean, if you got

17 very close to that point and then it dropped below,

18 then you would stop this heat removal, for a while at

19 least, until it burped something over the side.

20 MR. SEXTON: Right.

21 CO-CHAIR KIRCHNER: But I think what

22 you're showing is that it's actually stabilized and

23 just drifting slowly. Have you gone out much beyond

24 14,000 seconds?

25 MR. SEXTON: Sure. Yes, and we've also

1 got an integrated test facility at our NIST facility
2 that has been progressed to this state and we've seen,
3 yes, not -- we've seen pretty stable operation there
4 where it's not having a large variation in the flow
5 rate over the top of the riser.
6 CO-CHAIR KIRCHNER: Thank you.
7 MEMBER MARCH-LEUBA: When you have the
8 time, not in the record, can you point me in Chapter
9 15 where all those DHRS analysis are, because I don't
10 see them in the table of contents.
11 MR. SEXTON: Sure, and we can get someone
12 from Chapter 15. But it's just increase in secondary
13 flow. That might trigger the DHRS. Loss of all
14 power, that will trigger the DHRS. There's a lot of
15 situations. But we can certainly go over that.
16 MEMBER MARCH-LEUBA: Most of the Chapter
17 15 analysis is stopped when you scram. DHRS never
18 gets actuated.
19 MR. SEXTON: Oh, oh, sure. Yes, but
20 there's a long-term cooling that looks at long-term
21 operation of the DHRS.
22 MEMBER MARCH-LEUBA: One with long-term
23 cooling.
24 MR. SEXTON: Right.
25 MEMBER MARCH-LEUBA: And there is the

1 return to power.

2 MR. SEXTON: Yes.

3 MEMBER MARCH-LEUBA: Which does not

4 precede all those failures.

5 MR. SEXTON: I can talk to you about that.

6 MEMBER MARCH-LEUBA: 06, I'm very familiar

7 with. Okay. But please off the record let me know

8 where they are.

9 MR. SEXTON: Okay.

10 All right. The last component we're

11 covering for the reactor coolant system is the

12 pressurizer. The pressurizer, as we said, is integral

13 to the reactor. It's the very top part of the reactor

14 vessel. We already discussed the baffle plate. The

15 baffle plate separates the circulating coolant from

16 the pressurizer coolant. We see pressurizer heaters

17 for heat control for adding pressure by boiling some

18 of the water. We see spray for reducing pressure. So

19 those are our two mechanisms of pressure control. And

20 then our level is controlled by CVCS through addition

21 or letdown of reactor coolant.

22 As we discussed earlier, we also have a

23 high point degas line at the very top if you want to

24 eliminate some of the gas phase during normal

25 operation.

1 We don't have it on the slide here about
2 we are -- DCA does discuss two exceptions that are
3 kind of related to the pressurizer. One is the high
4 point vent regulation. And if you've read that
5 section of the SER or the DCA, you've seen that we
6 don't have high point vents. We've asked for an
7 exemption, and reason being that introduction of non-
8 condensable gases to this region doesn't disrupt the
9 circulation of the primary coolant, whereas some other
10 designs you could perhaps introduce non-condensable in
11 a particular spot that could disrupt the primary flow.
12 We don't have that situation here because it has a
13 single high point.
14 The other one is safety-related power for
15 pressurizer heaters and pressurizer level control.
16 And we don't rely on maintaining sub-cooling for any
17 safety-related function, so we also ask for an
18 exemption to safety-related power supplies to the
19 pressurizer heaters because our safety systems are
20 content to operate without pressurizer heaters in
21 service.
22 MEMBER SKILLMAN: Isn't the exemption for
23 the high point vent one that even design people might
24 challenge? In the old fire tube boilers there was a
25 crown vent. On steam locomotives there's a vent. On

1 a pressurizer there's a vent. The top of the steam
2 generator, OTSGs, there's a vent. Just general
3 engineering principles for where there can be steam or
4 vapor, whatever it might be, wouldn't good engineering
5 practice simply say we're going to have an event, even
6 if it's manually operated and we weld caps to it, that
7 we have the ability if we need to, to vent? It just
8 seems like that is a feature that any good boiler
9 designer would require, whether it's operable or not,
10 you've got one in case you need it because it's not
11 something you can go and add later.
12 MR. SEXTON: Yes, we have a vent right at
13 the top, the high point degasification line. It's a
14 manually operated system that could vent the high
15 point of the pressurizer at any time to --
16 (Simultaneous speaking.)
17 MEMBER SKILLMAN: Why are you asking for
18 an exemption?
19 MR. SEXTON: Oh, so the core aspect of
20 that regulation is accumulation of non-condensable
21 gases in a region of the RCS that could disrupt
22 primary circulation. So the good engineering practice
23 you're talking about isn't the basis of that
24 regulation. So it is quite a technical -- just the
25 history of the regulation, why it exists, what it's

1 for is about the ability of non-condensable gases to
2 disrupt natural circulation or circulation of the
3 primary loop.
4 MEMBER SKILLMAN: Okay. One more
5 question. From a cold to hot by how much does the
6 reactor assembly grow inside the CNV? Three inches?
7 Four inches?
8 MR. SEXTON: I don't have the number in
9 front of me, but it's a little bit less than that.
10 MEMBER SKILLMAN: Three-and-a-half?
11 MR. SEXTON: Do you know that off the top
12 of your head, HQ?
13 MR. NOEL: I don't know the number. I
14 think it's right in that ballpark. Maybe a little
15 less, like Colin said.
16 MR. SEXTON: I thought it was under two,
17 but somewhere in there. But we can look that up.
18 MR. NOEL: Based on where it was
19 supported. Some of the growth is up; some of the
20 growth is down. The supports are somewhat center of
21 the module.
22 MEMBER SKILLMAN: Okay. Thank you.
23 MEMBER REMPE: Where are you in the status
24 of getting -- are you submitting in NRELAP for
25 regulatory approval, or where are you in that?

1 MR. SEXTON: The validation report --
2 MEMBER REMPE: Validation report --
3 (Simultaneous speaking.)
4 MR. SEXTON: -- of NRELAP is something
5 the staff reviews in large part as part of Chapter 15,
6 if my understanding is correct.
7 MEMBER REMPE: And so you've submitted it
8 and they've not come back with their SER on that? Is
9 it a topical report?
10 MR. SEXTON: You would know that better
11 than me, Carrie.
12 MS. FOSAAEN: Yes, that's not part of this
13 chapter, so I don't think we're the right people to
14 answer that question.
15 MEMBER REMPE: But you reference the
16 NRELAP stuff a lot, so I just am curious. It's not
17 gone through the staff approval process yet or --
18 MS. FOSAAEN: I believe it's under review
19 by the staff.
20 MR. SCHMIDT: Yes, this is Jeff Schmidt
21 from Reactor Systems. Yes, the non-LOCA and LOCA
22 topical reports, both use NRELAP and they're under
23 review.
24 MR. SEXTON: Okay. That's our last slide.
25 We do have a couple kind of follow-up items here.

First off, the reason that the CVCS pressure is higher than the RCS is for the case where 2,100 psi is supplied from the RCS to the CVCS and then the recirculation pump, which moves the CVCS around, puts some positive pressure on top of that.

So if you were to have the RCS operating at 2,100 psi and you wanted to keep using your CVCS with recirculation pumps elevating the pressure above that 2,100, you could continue to do that by having that elevated design pressure.

MEMBER SKILLMAN: Okay. Thank you.

MEMBER CORRADINI: Do you have anything else?

MR. SEXTON: Oh, yes, we had a clarification on mass flow rate balance for the primary. That's basically how many times you inject or let down is the kind of basis for the inventory balance of the primary. It's not watching a level change and then making up for it or watching a rate. It's how many gallons did you add today to the RCS or how much --

MEMBER SKILLMAN: But how do you know that?

MR. SEXTON: Oh, because our control system would initiate a makeup, and we would have flow

1 meters on the makeup line.

2 MEMBER CORRADINI: And the letdown?

3 MR. SEXTON: And the letdown line.

4 MEMBER CORRADINI: Okay.

5 MR. SEXTON: Yes. So we --

6 MEMBER SKILLMAN: It must be a very

7 precise flow meter.

8 MR. SEXTON: I think --

9 MEMBER BLEY: Better than most I've seen.

10 MEMBER SKILLMAN: Well, normally it's the

11 levels, and they're very precise.

12 MR. SEXTON: Yes, I think with more time

13 you get more precision. So again, we have a more

14 time-sensitive and accurate leakage detection method

15 in pressure and condensate collection. And that's

16 just one more. And over the course of a week you get

17 an extremely accurate measurement of that as a

18 confirmation.

19 MEMBER BLEY: Thank you.

20 MR. FIELDS: This is John Fields with

21 NuScale. There was a question earlier about

22 surveillance capsule location. And if you look at

23 figure 5.3-2 in the FSAR, that provides those

24 locations for you.

25 CO-CHAIR KIRCHNER: Okay. What would we

1 like to do? Take a break? We will take a break at
2 this point and come back at 3:25 on the clock there.
3 Is that enough time? Let's make it 3:30. 3:30 on
4 that clock.
5 MEMBER CORRADINI: And the staff will come
6 and --
7 CO-CHAIR KIRCHNER: And we'll have the
8 staff come up next. But before we break, any further
9 questions now while the NuScale team is in front of
10 us?
11 (No response.)
12 CO-CHAIR KIRCHNER: No? Hearing none.
13 Okay. We are what, recessed?
14 MEMBER CORRADINI: Yes.
15 CO-CHAIR KIRCHNER: Yes.
16 MEMBER CORRADINI: That sounds like a good
17 move.
18 (Whereupon, the above-entitled matter went
19 off the record at 3:10 p.m. and resumed at 3:24 p.m.)
20 CO-CHAIR KIRCHNER: Okay. So we're back
21 in session.
22 With that we're going to turn to the
23 staff.
24 Bruce, please proceed.
25 MR. BAVOL: Okay. My name is Bruce Bavol.

1 I'm a project manager for the NuScale design
2 certification. This is a review of Chapter 5, Safety
3 Evaluation with Open Items, Reactor Coolant Systems
4 and Connecting Systems.
5 Go over briefly the agenda. I'll just go
6 over a little bit about the review team, summary of
7 the staff's review. We're going to mix up the
8 sections a little bit. We've got a technical staff
9 member who has a competing appointment, so we're going
10 to do 5.3.1 first, Dan Widrevitz, as soon as I'm done
11 with this opening. And then we'll move through with
12 the regular scheduled sections.
13 Here is a list of the technical reviewers.
14 As you can see we've got a total of nine. We'll cycle
15 through as efficiently as possible, but everybody had
16 a section, a key section for this chapter review.
17 The evaluation is again based on Rev. 1.
18 During the review staff issued a total of 28 RAIs.
19 Currently we have six open items and five confirmatory
20 items. NuScale has -- with Revision 2 that was
21 submitted in the fall, NuScale has incorporated that
22 information, so -- but there are still from that point
23 to Revision 3 some confirmatory items that have to be
24 made.
25 Supporting SER. There was a safety

evaluation that was done for the pressure and temperature limits methodology. Dan is also going to touch on that.

We had three requested exemptions. Some were mentioned with the NuScale reactor coolant high point vents and two items for the pressurizer, pressurizer heaters and level indication. And again, this full committee is scheduled for May 2nd.

The next two pages are a list of the titles for each of the sections. Again, we're going to start with 5.3.1, reactor vessel materials. And I'll go to that and we will -- I will turn it over to Dan.

MR. WIDREVITZ: All right. Good afternoon, everyone. So 5.3.1 is, as it states, the reactor vessel materials section, which details materials and fabrication for the reactor vessel.

The NuScale design is in many aspects highly consistent with precedent, both in terms of materials and fabrication considerations. Familiar aspects are reactor vessel material is exactly the same as we're all familiar with.

In terms of unique aspects generally there's sort of a positive spin here in that there's no welds within the geometric beltline of the vessel,

1 something that's bedeviled us in other areas. The
2 vessel is clad on both sides. And just a little bit
3 of uniqueness, the vessel -- the bolting for the
4 reactor vessel closure flange is made of SB-637, which
5 is actually a nickel-based alloy. That's a little
6 unusual.
7 CO-CHAIR BALLINGER: Yes, because it's
8 water on each side of the vessel.
9 MR. WIDREVITZ: So the -- Yes, I hear Dr.
10 Ballinger explaining. There's water on both sides of
11 this vessel.
12 (Laughter.)
13 MR. WIDREVITZ: And so there's a bit of a
14 corrosion concern on the exterior. So you've got some
15 interesting material selections on the exterior that
16 you don't see in our operating fleet.
17 CO-CHAIR BALLINGER: Bullet No. 3 on the
18 unique aspects I think you need to get rid of the word
19 A-N. Alloy 718 is not an austenitic stainless
20 steel --
21 MR. WIDREVITZ: Yes, it's a nickel --
22 CO-CHAIR BALLINGER: -- except in the most
23 general sense.
24 MR. WIDREVITZ: It's -- that is absolutely
25 my fault. It should say nickel-based alloy.

1 CO-CHAIR BALLINGER: Okay.

2 MR. WIDREVITZ: Yes. As you can tell by

3 SB --

4 CO-CHAIR BALLINGER: Yes.

5 MR. WIDREVITZ: -- I failed you

6 completely. So that's really it for -- all I have for

7 5.3.1. And so generally that just follows precedent

8 very closely.

9 Section 5.3.2 is the pressure-temperature

10 limits, upper-shelf energy, and pressurized thermal

11 shock review section. In this case the review really

12 focused on a referenced pressure temperature limits

13 report methodology, which is a separate technical

14 report. In terms of familiar aspects generally the

15 geometries, the neutron flux, the materials are

16 familiar. The use of a pressure temperature limits

17 report in a DCD is very common aspect that we've seen

18 previously.

19 Generally NuScale -- the NuScale design

20 has many beneficial aspects with regard to this review

21 in terms of how it operates and what the challenges

22 might be for materials.

23 So next slide. In terms of the pressure

24 temperature limits report, it is a proprietary

25 document. There is a non-proprietary version.

1 In terms of the review of the beneficial
2 aspects we're looking at here is that the vessel
3 itself is thinner than we've seen in other
4 applications, which means you have lower thermal-
5 induced stresses as you have transients. There's a
6 lack of a high-volume, low-temperature ECCS system
7 that's dumping cold water on the interior of the
8 vessel. There's an absence of welds in the geometric
9 beltline. And generally you have superior material
10 properties relative to what we see in the operating
11 fleet. So on almost every aspect that we spent a lot
12 of time reviewing for the operating fleet NuScale is
13 in better shape.
14 In terms of challenging aspects, now the
15 vessel itself is undergoing irradiation and
16 irradiation embrittlement at a lower radiation
17 temperature than what you typically see in the fleet,
18 which increases your embrittlement relative to the
19 amount of fluence it's received. And also the
20 limiting embrittlement material is due to a geometric
21 discontinuity. Whereas usually we're very concerned
22 about welds in the beltline, here we've actually --
23 because essentially improvements in the design and
24 chemistries we're concerned about geometric
25 discontinuities that are receiving noteworthy flux,

1 but not necessarily dramatically large amounts.
2 So in terms of review challenges, one of
3 our challenges, traditionally we rely a lot on our
4 tool FAVOR, which essentially models cylindrical
5 shells for getting an analysis of pressure temperature
6 limits, but because NuScale is not limited by the
7 shell region of the RPV, FAVOR just isn't useful.
8 And the other issue is that our
9 traditional Reg Guide 199 and in some senses 10 CFR
10 50.61 aren't accurate for the irradiation temperature.
11 They have to be supplemented.
12 So in terms of review solutions, we worked
13 with some of our research colleagues to audit the
14 computational pressure temperature limit basis.
15 Normally we could generate most of that using FAVOR,
16 but in this case because of good reasons FAVOR
17 doesn't provide us the information we were seeking.
18 And we also worked with our research colleagues to
19 compare the NuScale embrittlement to relevant
20 experience and determine whether really we could use
21 in some adjustment Reg Guide 199/10 CFR 50.61.
22 And what we applied in this case, what we
23 and the applicant came to was using a degree -- per-
24 degree adjustment. We're essentially adding one
25 degree of embrittlement for every degree lower in

temperature you are from sort of the typical Reg Guide 199 curve's basis. And we determined that the -- consequently you remain in a bounding space for NuScale over the period of initial license. But we'd expect that as soon as you get surveillance data from your Surveillance Program it very rapidly -- because there's 12 modules. You build up a lot of data and get a good sense about how accurate and how you're doing in terms of embrittlement.

CO-CHAIR BALLINGER: I meant to ask this to the NuScale folks, but how much of a lead do the surveillance capsules have?

MR. WIDREVITZ: A third at 2.5.

CO-CHAIR BALLINGER: Two point five?

MR. WIDREVITZ: Yes, so quite a bit.

CO-CHAIR BALLINGER: Quite a bit.

MR. WIDREVITZ: And they're pulling -- I believe their -- I want to say their first capsule is at six EFPY. So they're going to have data -- and again, their initial properties are excellent. So they're going to have data well ahead of being in that space.

MEMBER RICCARDELLA: And did you say there's no welds? There's no welds in the beltline?

MR. WIDREVITZ: It's a ring.

MEMBER RICCARDELLA: Yes.

MR. WIDREVITZ: Yes, and then -- so it's a ring in the geometric beltline. So directly horizontally adjacent to the core. And then there is a weld to the bottom head. And that's just because the core itself. And so there's no axial welds and there's no welds right in that -- it's in the maximum fluence zone.

Any other questions?

(No response.)

MR. WIDREVITZ: All right. So last slide. 5.3.3 in this particular application more or less simply references all other sections. It has very little unique content. The only unique content in 5.3.3 was a summary concerning X and installation, which was pretty pro forma. You can imagine you want to keep your reactor clean when you ship it and you'd like to install it properly. So there wasn't really much in 5.3.3.

And with that, that concludes my portion.

MR. BAVOL: Okay. And before Dan -- I'd like to ask if there's any specific questions for Dan before we ask him to depart? And we'll fill with another technical --

CO-CHAIR KIRCHNER: Anyone?

(No response.)

MR. BAVOL: Thanks, Dan.

I'd also like to say that this Chapter 5 and the PTLR safety evaluation also was reviewed by NuScale for proprietary information and both of those documents are non-proprietary. And they are available. We have the ML numbers for those.

Okay. Going back to Section 5.2.1, I'll turn it over to Nick and let him get started with that.

MR. HANSING: Good afternoon. My name is Nicholas Hansing. Staff reviewed Section 5.2.1.1 and 5.2.1.2 in accordance with the respective SRP sections. The ASME Boiler Pressure Vessel Code of Record is the 2013 edition with no addenda. There were no proposed alternatives under 10 CFR 50.55a(z) for the ASME Boiler Pressure Vessel Code.

The application proposed ITAAC to verify compliance with ASME BPV Code Section 3 requirements. These are consistent with the staff-approved standardized ITAAC guidance.

The applicable ASME BPV Code Section 3 Code cases have been identified in the application. These are accepted in Reg Guide 1.84 for use and any applicable conditions on these code cases have been

applied.

The identification of code cases for Section 11 of the Boiler Pressure Vessel Code and OM Code have been deferred to the COL applicant.

In conclusion the staff finds that the applicant has met the requirements of 10 CFR 50.55a by identifying the Code of Record which is incorporated in 10 CFR 50.55a classifying the RCPB components and non-RCPB components designated as Quality Group B and C components as Class 1, Class 2 and Class 3 components, respectively, and identifying ASME Code cases that are acceptable for use in the NuScale design.

Additionally, the staff makes a finding under 52.57(b)(1) regarding ITAAC for construction in accordance with the ASME BPV Code.

If there's any questions, I'd be happy to answer them at this time.

(No response.)

MR. HANSING: Thank you.

MR. BUDZYNSKI: Good afternoon. My name is John Budzynski and I have Section 5.2.2, Overpressure Protection. And the purpose was to limit the pressure to 110 percent of the design pressure during normal operation and AAOs, and during startup

and cool-down limited to the limiting pressure according to the temperature below 325 Fahrenheit.

Regulatory basis is listed there. GDC 15 and 31 are the primary ones.

And the guidance documents were 5.2.2, 5.4 and Branch Technical Position 5-2.

Next slide. Methods of compliance was GDC 15 for RSVs and GDC 31 for RVVs. Key design considerations was that the overpressure protection during power operations above 325 degrees -- there are two RSV valves. Each one has the capability of full capacity to keep the reactor pressure below 110 percent of the design pressure. And there was an audit completed. I felt that RSVs met the requirements and I find them acceptable.

The other condition --

MEMBER SKILLMAN: John, what was the limiting inflow rate for the RSVs? Is that a runway on the CVCS? Is that designed for CVCS full capacity?

MR. BUDZYNSKI: I'm not sure really. I have to think about that.

MEMBER SKILLMAN: My real question is what is the sizing basis of the RSVs?

MR. BUDZYNSKI: RSV sizing basis was based on the criteria that -- at full power conditions and

that it would take the second safety trip. So there was a delay of approximately two seconds before the calculation was made and it was based on those conditions.

MEMBER MARCH-LEUBA: Are you saying it's an overpower that produces the steam and overpressure?

MR. BUDZYNSKI: Right.

MEMBER MARCH-LEUBA: Over a very short period of time?

MR. BUDZYNSKI: Yes.

MEMBER MARCH-LEUBA: But Dick is more concern about a runway pump on the CVCS that starts pumping.

MR. BUDZYNSKI: I didn't consider that, the CVCS system, a runway pump on the CVCS system.

MEMBER SKILLMAN: Well, the CVCS is designed for higher pressure and that pumps directly into the reactor coolant system.

MR. BUDZYNSKI: Right.

MEMBER SKILLMAN: So I would think that at least part of the assessment of the RSV would be the full-flow capacity of the CVCS pump or pumps depending on how many can be operating at one time.

MR. SCHMIDT: This is Jeff Schmidt from Reactor Systems. There is a CVCS isolation. I think

it's 80 percent level. So it is cut off if you're over-pressurizing due to level increases.

MEMBER SKILLMAN: What's it isolating?

MEMBER CORRADINI: Can you say that again? So when I get to a certain pressurizer level, it essentially doesn't allow --

MR. SCHMIDT: It isolates CVCS.

MEMBER SKILLMAN: I thought we weren't measuring level. We were calculating it.

MR. SCHMIDT: No, there's analytical limits in Chapter 15 for level.

MEMBER SKILLMAN: Okay. So they're basically the same? It's not solid?

MR. SCHMIDT: It says in 5.2.2 that -- it talks about the isolation of the CVCS system and how that level protects that.

MEMBER SKILLMAN: Let's keep going. I'll take a look here. Thank you.

MR. BUDZYNSKI: Okay. And during low-temperature operation below 325 degrees we used RVVs, which is part of the ECCS system. We used those. And basically what happens is that there are four points based on the temperature and pressure conditions that's fed into the module protection system and if they reach one of those values, then it sends a signal

to the trip pilot-operated valve which is connected to RVVs and that would open the RVV.

MEMBER SKILLMAN: Keep them going, please.

MR. BUDZYNSKI: Okay. Staff reviewed the results and with the exception of two open items staff finds that everything is acceptable.

The two open items. Open Item No. 1 is a confirmatory item of ITAAC in Chapter 14.

MR. BAVOL: John, this is the one that came in late --

MR. BUDZYNSKI: Yes.

MR. BAVOL: -- was changed to confirmatory.

MR. BUDZYNSKI: Right, that one came in late and was changed to confirmatory.

And the other open item is a -- concerns LTOP and ECCS. And we have an audit going on, and that would I believe resolve any issues with that open item.

MEMBER CORRADINI: So let me make sure I understand these --

MR. BUDZYNSKI: Yes.

MEMBER CORRADINI: -- because this is where I had a question.

MR. BUDZYNSKI: Yes.

1 MEMBER CORRADINI: So they're going to
2 modify the ITAAC to properly identify how it will be
3 tested during pre-ops? Is that the first open item?
4 MR. BUDZYNSKI: Right.
5 MEMBER CORRADINI: So it's a modification
6 an already existing ITAAC?
7 MR. BUDZYNSKI: Yes.
8 MEMBER CORRADINI: And the second?
9 MR. BUDZYNSKI: And the second item is
10 just the factory testing that we will confirm the
11 operation of the RVVs.
12 MEMBER CORRADINI: Oh, I see.
13 MR. BUDZYNSKI: Under LTOP conditions,
14 yes.
15 MEMBER CORRADINI: So they'll test it in
16 the place of manufacturing?
17 MR. BUDZYNSKI: Right. Right.
18 MEMBER CORRADINI: Okay. Thank you.
19 MR. BAVOL: Andrew?
20 MR. YESHNIK: Good afternoon. My name is
21 Andrew Yeshnik and I am the technical review for the
22 Reactor Coolant Pressure Boundary Materials.
23 As previously described, NuScale utilizes
24 common materials for their plant construction. This
25 includes low alloy steel, often stainless steels from

1 nickel alloys.

2 As described by Dan Widrevitz earlier, the

3 reactor pressure vessel is a low alloy steel component

4 that is clad with austenitic stainless steel.

5 NuScale commits to utilizing the

6 Regulatory Guides described on that slide, which

7 describe ways to prevent degradation of the

8 aforementioned materials. Materials degradation is

9 also prevented by complying with the EPRI Primary

10 Water Chemistry Guidelines.

11 The staff has reviewed the DCD and found

12 it to be consisted with the SRP Section 5.2.3. There

13 is one open item and, during the last revision of the

14 Design Certification Document, the check valves that

15 are between the reactor vessel and the containment

16 vessel were removed from the table inadvertently. So

17 this change re-adds those to the table so that the

18 list is complete.

19 There was a challenging issue during this

20 review on the ASME Code and its treatment of small

21 sized components. The safety evaluation reflects the

22 agency's position that the application of the ASME

23 Code as required by 10 CFR 50.55a committed to by

24 NuScale and reviewed by the staff in Section 5.2.1

25 satisfies the reasonable assurance of adequate

protection standard. However, there are different staff viewpoints on whether the ASME Code small sizing exemptions removed quality assurance requirements and nondestructive requirements are appropriate for the NuScale design, due to this range in viewpoints and non-concurrences anticipated for this section.

So in summary, the staff has concluded that, withstanding that one open item, the NuScale design meets the SRP and provides for using rules that ensure adequate protection.

Any questions?

MEMBER RICCARDELLA: Excuse me. You list 508 and 533. I thought it was all forgings. Is there 533 in the vessel?

MR. YESHNIK: The lower, I believe is 508 and there is the upper reactor vessel, which has some clads with 533.

MEMBER RICCARDELLA: It does have?

MR. YESHNIK: Yes.

MR. XU: Hongqing Xu, Material Engineer at NuScale.

The 533 is the plain material, which is only used for the support plates attached to the vessel.

MR. YESHNIK: Okay.

1 MR. XU: The vessel does not use any
2 plates. So there is no axial welds in the vessel.
3 MEMBER RICCARDELLA: Okay, no axial welds.
4 Thank you.
5 MR. YESHNIK:
6 MEMBER RICCARDELLA: And do I understand
7 that the vessel is maybe -- is clad on both sides,
8 inside and out?
9 MR. YESHNIK: That's correct.
10 MEMBER RICCARDELLA: Okay, so that's a
11 difference to normal.
12 MR. YESHNIK: Yes, most vessels are clad
13 on the outside.
14 MEMBER RICCARDELLA: On the inside.
15 MR. YESHNIK: Yes, on the inside they are
16 clad but on the outside.
17 Okay, I guess the next group.
18 MR. BAVOL: All right, if there's no other
19 questions for this group, I would like to bring up the
20 next group. It would be Steve Cumblidge and Chang Li.
21 MR. CUMBLIDGE: Okay, my name is Steven
22 Cumblidge. I will be presenting the section on
23 Section 5.2.4, the In-service Inspection and Testing
24 of the Reactor Coolant Pressure Boundary.
25 The regulatory basis for the review was

1 primarily GDC 32, as it relates to the inspection and
2 testing of the reactor coolant pressure boundary, also
3 10 CFR 50.55a, Codes and Standards, also as it relates
4 to the requirements for pre-service and in-service
5 inspection and testing of Code Class 1 components, and
6 primarily used in ASME Code, Section XI, as
7 conditioned by 10 CFR 5.55a, and also the ASME Code
8 Case N-729-4, as modified by 10 CFR 50.55a for the
9 reactor vessel head inspections.
10 While the primary means of compliance for
11 the GDCs were to use the ASME Code Section XI Rules
12 for most ASME Class 1 components, it is worth noting
13 that Section 5.2.4 does address the ISI requirements
14 for the components and configurations unique to the
15 NuScale design. It would be primarily, the piping
16 that leaves the containment and goes to some valves
17 outside of the containment, where they have augmented
18 inspections.
19 So the key design considerations and
20 features that we reviewed was that 1) that they will
21 meet the latest ASME Code, Section XI, Edition
22 incorporated by reference in 10 CFR 18 months before
23 the date of the initial loading of fuel.
24 Also in the DCD it was described the
25 equipment will be developed and installed to

1 facilitate the remote inspection of areas that cannot
2 be readily accessed for personnel for the in-service
3 inspections.
4 And it is also worth noting that most of
5 the Class 1 components are located inside of the
6 containment.
7 And we have concluded that, based on the
8 description of the PSI and ISI program, that that is
9 acceptable and meets the inspection and testing
10 requirements of GDC 32 and 10 CFR 50.55a. And we
11 believe that the PSI and ISI programs and testing
12 programs will provide reasonable assurance that
13 evidence of structural degradation or loss of leak-
14 tight integrity occurring during the service will be
15 detected in time to permit corrective action before
16 the safety function of the component is compromised.
17 And we have no open items in this area.
18 MEMBER RICCARDELLA: You're referring to
19 the PSI and ISI programs. I thought that's a COL
20 item. Those programs don't exist yet, do they?
21 MR. CUMBLIDGE: Well, they're in Section
22 XI. Those are described in ASME Code.
23 MEMBER RICCARDELLA: They intend to do it
24 in accordance with Section XI.
25 MR. CUMBLIDGE: Right.

1 MEMBER RICCARDELLA: But they haven't
2 developed the actual programs yet.
3 MR. CUMBLIDGE: Right.
4 MEMBER RICCARDELLA: Okay.
5 MR. CUMBLIDGE: But that's a pretty
6 detailed description of what you have to do.
7 MEMBER RICCARDELLA: Pardon me?
8 MR. CUMBLIDGE: That's a pretty -- it's a
9 detailed description of what you have to do in ASME
10 Code.
11 CO-CHAIR KIRCHNER: Just to elaborate,
12 your first of set bullets seems to contradict your
13 conclusion. You said they are not readily accessible
14 to inspection personnel. They are inside containment.
15 So but you've already made the conclusion that the ISI
16 program will provide reasonable assurance of any
17 leaks. So that's based on what? It's based on
18 intent?
19 MR. CUMBLIDGE: If they comply with it.
20 If they were able to do it -- if they were able to
21 comply then they'll provide reasonable assurance.
22 MEMBER CORRADINI: So it's, in other
23 words, they must follow the code procedure; assuming
24 they can, it's fine.
25 MR. CUMBLIDGE: Yes.

1 CO-CHAIR KIRCHNER: Are there any things
2 out there -- I'm not a boiler pressure vessel code
3 expert -- in Section XI that this design would present
4 specific challenges in implementing an ISI program?
5 MR. CUMBLIDGE: Not really, no.
6 MEMBER RICCARDELLA: It's certainly a lot
7 different than a conventional -- than would be a
8 conventional ISI.
9 CO-CHAIR KIRCHNER: I know there's a lot
10 of robotic tools and such available now that weren't
11 in place many, many years ago but -- okay. There are
12 a lot of inaccessible or your words, not readily
13 accessible welds and other areas that I think have
14 primary boundary piping inside the containment vessel.
15 MEMBER RICCARDELLA: I think the second
16 bullet on the top says you know suitable equipment
17 will be developed by somebody. That's a future --
18 that's a COL item, I think, not a DCD.
19 CO-CHAIR KIRCHNER: But, professionally,
20 don't see any showstoppers in terms of being able to
21 implement the requirements of Section XI.
22 MR. CUMBLIDGE: No, I do not.
23 CO-CHAIR KIRCHNER: Okay, thank you.
24 MR. BAVOL: Okay, Section 5.2.5, Chang.
25 MR. LI: Good afternoon. My name is Chang

1 Li. I am the reviewer for Section 5.2.5.

2 Our review of NuScale Reactor Coolant

3 Pressure Boundary Leakage Detection was based on DSRS

4 Section 5.2.5 and the Reg Guide 1.45.

5 The review areas are listed in the third

6 bullet of this slide.

7 In our review, we identified one open

8 item. NuScale design applied the leak-before-break to

9 main steam and feed water piping breaks without a

10 technical specification limiting condition for

11 operation, the LCO for the leak-before-break limit.

12 The leak-before-break analysis will be

13 discussed in SER Chapter 3. Our review of leak-

14 before-break was focused on the leak detection and

15 postulated a break after leak. We found that leak

16 detection to be acceptable but not the postulated

17 break after leak.

18 The common practice for leak-before-break

19 application in the nuclear industry is to have a tech

20 spec limiting condition for operation when the LBB

21 leakage limit is exceeded because the leak-before-

22 break analysis in FSAR Chapter 3 are not valid and the

23 dynamic effects of the postulated pipe break are not

24 protected when the leakage limit is succeeded.

25 NuScale took a position of no LCO for its

leak-before-break application. Instead, they add a COL item for owner-controlled procedures. We reviewed what they talk about the procedures and found the only owner-controlled procedures are not sufficient to address the safety concern.

The analysis and the protection of the dynamic effects for the postulated for the main steam and feed water line break are not existed because they use leak-before-break. The presumption for GDC 4 being satisfied in the safety analysis of NuScale FSAR Chapter 15 could be invalid when the limit is exceeded.

The safety function of ECCS modular protections instrumentation and control rod drive mechanisms which are assumed to function as designed could not be ensured. So the Chapter 15 analysis could be invalid if the leak-before-break leakage limit is exceeded.

We found that the main steam and feed water leak-before-break leakage limit is an operating restriction and is an assumption of a design basis accident or transient analysis that either assumes the value of pressure, presents or presents a challenge to the integrity of efficient product that fits the criteria of the tech spec rule in 50.36.

1 Therefore, we believe the tech spec is
2 required for this leakage limit.
3 Recently, nuclear proposed a LCO for the
4 secondary pipe -- secondary site piping leakage limit,
5 which is currently under staff review.
6 CO-CHAIR KIRCHNER: How, Chang, will this
7 differ -- because they can't identify the source of
8 the leak, how does this differ from your other
9 constraints that you have for acceptable leakage
10 rates?
11 MR. LI: Yes, this containment is smaller
12 and when we asked questions about it, they are
13 locating the leakage. They explained to us the
14 leakage, the capability of locating leakage for them
15 is not visible, so they will do it the best they can.
16 They do not commit to do the leakage -- locating the
17 leakage. And we checked with the other reviewers, for
18 example from Mechanical Engineering Branch, and they
19 have the open items right the RVV, RRV. We ask how
20 does this -- if it is not capable to detect leakage
21 exactly the location there and then it goes to the
22 next fallback position is the tech spec when it is
23 linked to 0.5 gpm, they identify leakage tripped to
24 tech spec. And the 0.5 gpm would not let the valve
25 inoperable.

1 So that is from what we concluded, when in
2 their case, even if they are not able to exactly
3 locate the leakage where that exact leakage is
4 concerned, then when it hits the 0.5, then the plant
5 was supposed to go to shutdown mode.
6 MEMBER CORRADINI: So it's 0.5 gpm for an
7 undetermined source?
8 MR. LI: Yes. But if they don't know
9 exactly where it is located, then when it hits that
10 level, as per tech spec coding.
11 MEMBER RICCARDELLA: So NRC Research has
12 recently completed a fairly large program called xLPR,
13 extremely low probability of rupture, in lieu of leak-
14 before-break. Has anybody discussed that? I mean if
15 I were an applicant, I'd sure be looking to do that
16 instead of leak-before-break on this design.
17 Has that been discussed?
18 MR. CUMBLIDGE: No. Nothing has been
19 completed as a strong term for the xLPR. It's
20 approaching completion.
21 MEMBER CORRADINI: Is it fast approaching
22 completion?
23 MR. CUMBLIDGE: No.
24 MEMBER RICCARDELLA: Sure it is. The
25 program is done.

1 CO-CHAIR BALLINGER: It's complete but the
2 process of administrative this, that, and the other
3 thing -- he's smiling over there -- is insane. Am I
4 right?
5 MR. CUMBLIDGE: I can make no comment
6 because I am not part of the leak-before-break --
7 (Simultaneous speaking.)
8 MEMBER RICCARDELLA: You know leak-before-
9 break is older -- an older concept than I am, almost,
10 which is pretty old. I would think that with a brand
11 new reactor like this, we would be looking at a more
12 modern approach to this than leak-before-break.
13 Again, just one member's opinion.
14 MR. BAVOL: All set? Okay, for the next
15 group, I would like to call up Greg Makar, Boyce
16 Travis, and Alex.
17 MR. MAKAR: I'm Greg Makar from the
18 Materials and Chemical Branch. I am going to present
19 two topics, the steam generator materials and some
20 design aspects and also the steam generator program
21 and I would like to acknowledge my teammate in this
22 from the Branch, Leslie Terry.
23 And also on the second topic, the steam
24 generator program, we had support from a contractor,
25 Engineering Mechanics Corporation of Columbus, who

1 supported the evaluation of the tube plugging limit,
2 that is, not the number of tubes but how much
3 degradation a tube can handle before it needs to be
4 plugged. They did that. We used several members of
5 Emc2. The leads were Dr. Gery Wilkowski and Ms.
6 Elizabeth Plumlee. And I think Gery and Elizabeth are
7 on the phone. Is that true?
8 MR. WILKOWSKI: Yes, we are.
9 MR. MAKAR: Okay, thank you.
10 So for the first topic, materials for the
11 steam generator and some design aspects, this focus is
12 on selection processing, testing. It is really the
13 types of materials in the steam generator and
14 associated components, and how they are processed for
15 optimized service, and also addresses compatibility of
16 the materials with the environments and also the
17 accessibility to evaluate their performance.
18 And so in these themes listed on this
19 slide, all of these are really focused on tube
20 integrity. That's the overarching theme of these
21 reviews is the structural and leakage integrity of
22 steam generator tubing. And there are no COL items in
23 this first section and no open items.
24 There is one confirmatory item that was
25 not in the safety evaluation and that is the material

1 specification for the tubing would be added to the
2 FSAR.
3 Next slide, please.
4 So it's clear the steam generator design
5 has some features that are not conventional, not what
6 we're used to in the operating fleet. So I just
7 wanted to, on this slide, lay some of these out on the
8 left side and some of these are first of a kind for
9 our industry. That includes having the primary
10 pressure outside of the tube, having the helical coil
11 shape. There is a first of a kind support structure,
12 first of a kind inlet -- feed water inlet and plenum
13 designs, and, also, the flow restrictors. And we
14 heard about these from the applicant's presentation.
15 On the right side, this is how -- it's not
16 a one-to-one correspondence on the left and right
17 side. But the right side summarizes how these
18 unconventional features affected our review for this
19 section.
20 So when we look at the degradation
21 assessment that has to be performed for steam
22 generators, that may be different, different modes of
23 degradation.
24 The tube -- I mentioned the collapse. The
25 tubes are susceptible to collapse rather than a burst

1 and we have to look at the allowable tube thinning
2 before a tube needs to be plugged. There may be
3 different effects of corrosion because of the flow on
4 the inside of the tubes on the secondary site.
5 And you asked good questions about support
6 design and the inspection requirements.
7 Also I will note that the tube support and
8 flow restrictor dynamic effects are a part of Chapter
9 3. So we are looking at aspects of degradation that
10 could be managed by the steam generator program.
11 Next slide.
12 And the regulations, again, are heavily
13 focused on the reactor coolant pressure boundary. The
14 steam generator tubes are part of the reactor coolant
15 pressure boundary and have a heat removal function.
16 There's also some -- so the codes and standards apply
17 to the material in ASME Code and regulation about
18 processing the materials for optimum performance. And
19 there are also technical specifications related to
20 this.
21 Next, please.
22 For guidance, the first one there, the
23 DSRS for this section has a lot of the aspects that I
24 mentioned on the first slide, with the type of
25 materials, the design features, the compatibility with

1 coolant.

2 There are also a number of reg guides that

3 are related to optimizing the performance of the

4 materials for service, and cleanliness, and quality

5 issues.

6 Next, please.

7 And in our review of this topic, we found

8 that these, while there are many novel features to

9 this, some are not. And so they are using the tube

10 material that has been the best performing in the

11 operating fleet, the thermally-treated alloy-690 for

12 the tubing, according to the fabrication testing and

13 inspection requirements and guidance that we have.

14 The support structures are also made of

15 corrosion-resistant materials.

16 And it has design features which are

17 designed to limit crevices where corrosion products

18 could accumulate and also residual stresses, such as

19 in the amount of bending of tubes.

20 The tubes have a wall thickness that is

21 within the range in the operating fleet and it has the

22 tube diameters, also, that of tubes in the operating

23 fleet. The combination, in general, where there are

24 thicker walled tubes in the fleet, they are for the

25 larger diameter tubes and the smaller diameter tubes

1 have a smaller wall thickness.

2 So this combination of a small -- a low

3 wall diameter, 5/8 inches, and the 50 mils wall

4 thickness are similar but a little bit outside. So a

5 higher/lower diameter to wall thickness than what we

6 had in the fleet.

7 And the design provides for access to what

8 we want to call the secondary site, the shell side, in

9 this case primary. It also provides access to the

10 tubes, themselves, to be able to put in an inspection

11 device in that.

12 So in considering all of these features,

13 we found that the materials and these designs, and the

14 design meets our requirements and are, therefore,

15 acceptable.

16 MEMBER SKILLMAN: Greg, let me ask this

17 question. Just I'm going to just make two comparisons

18 and then talk about the NuScale steam generators.

19 If you think of an OTSG when it is

20 fabricated, it is fabricated horizontally and the

21 11,000 tubes or 15,000 tubes are fed one at a time

22 horizontally. And individuals actually get in and

23 support the tubes through the approach to the tube

24 support bites. For the RSGs, some are assembled

25 horizontally and some are assembled vertically.

1 But in both cases, in the OTSG, the B&W
2 design and the RSGs, the mass load of the tube is
3 borne by gravity in the tube sheet, where in B&W, it's
4 pinned at the top.
5 In this steam generator design, these
6 1,800 tubes end up in a large bank and their vertical
7 load is burdened onto cantilever supports.
8 What review did you do for the materials
9 and construction for those supports that are holding
10 each of these four groups of 345 tubes? What I'm
11 really getting at is on the OTSG, the load is really
12 borne down the center to the tube in the lower tube
13 sheet. That tube sheet is 22 inches thick.
14 Almost the same for the RSGs, massive tube
15 sheets bearing that load.
16 This generator has the mass of those tubes
17 being held by these cantilever supports. What
18 attention did you give to that review?
19 MR. MAKAR: The main review for that was
20 to ensure that those cantilevers are designed
21 according to -- that they are designated Class 1 in
22 accordance with the ASME Codes so they get that level
23 of design and they are also inspected to Class 1 of
24 the ASME Code, so the highest level of design
25 requirements and inspection.

1 We did not do an independent review, for
2 example, of what the loads are.
3 MEMBER RICCARDELLA: Have those detailed
4 design reports, stress analysis reports been completed
5 or is it just saying that we will do it in accordance
6 the ASME Codes?
7 MR. MAKAR: I don't know how far they are
8 in that process.
9 MEMBER RICCARDELLA: I mean, presumably,
10 there is a vendor that is building these things --
11 MR. MAKAR: Right, right.
12 MEMBER RICCARDELLA: -- and is certified
13 to do ASME Code design but we don't know whether
14 they've been -- how far along the detailed design
15 process is. Is that what you're saying?
16 MR. MAKAR: Correct.
17 MEMBER RICCARDELLA: Okay.
18 MR. MAKAR: That will --
19 MEMBER RICCARDELLA: Could we ask someone
20 from NuScale, maybe, to address that?
21 MR. MAKAR: Sure.
22 MEMBER CORRADINI: Is somebody here?
23 MEMBER RICCARDELLA: They're deciding.
24 MR. SEXTON: Hi, this is Colin Sexton.
25 So ASME design specification needs to be

1 stamped by the owner of the facility. So to complete
2 an ASME design report, you need an owner of a facility
3 to stamp the design spec and then stamp the design
4 report.
5 So we have COL items for design reports
6 for all of our Class 1, 2, and 3 ASME components. We
7 don't do analysis that is similar to the work that you
8 would do for a design report in preparation for the
9 DCA application. But as far as the practice of
10 actually preparing the design report and stamping it,
11 that is an activity that can only be completed by a
12 COL applicant or an owner of a plant.
13 MEMBER RICCARDELLA: So have vendors been
14 identified for these components?
15 MR. SEXTON: We work with a vendor that is
16 advising us on steam generator fabrication and we've
17 done a lot of work on that. And we do stress analyses
18 on components like these, and the steam generator, and
19 general -- with computer codes.
20 MEMBER RICCARDELLA: Okay, so you have
21 done some preliminary stress analyses but the final
22 design reports aren't --
23 MR. SEXTON: That's right. So this is
24 just making a distinction between design reports and
25 design work. We've done quite a bit of design work

1 but as far as is the design report done, no. The
2 design spec can only be stamped by the owner and there
3 is a COL item for a completed design report.
4 MEMBER CORRADINI: So is it the same group
5 that is doing the testing for you that is your design
6 -- that is doing the design work with you?
7 MR. SEXTON: No.
8 MEMBER CORRADINI: Oh, okay.
9 MEMBER SKILLMAN: Thank you.
10 MR. MAKAR: Was there -- did you say you
11 had a second?
12 CO-CHAIR KIRCHNER: Could we go back while
13 this slide is up, third bullet?
14 So Member Skillman identified potential
15 for inducing quite a bit of stress in the tubes. I
16 know from my own experience making heat pipes, you
17 have a similar effect, Dick, in that if you run a
18 knurling tool on the inside of the heat pipe, which is
19 typically done, a knurling tool spirals as you go
20 through and it induces a stress that is almost
21 helicoidal inside what is, in this case, a straight
22 pipe. But here we have -- so does the -- have you
23 looked at residual stresses in the tubing from the
24 standpoint at sump, that stress is probably going to
25 show up either when it bends up straight and goes up

1 into the upper tube sheet or when it's bent down at an
2 angle like this and fastened into the lower tube
3 sheet?
4 And I would expect that those two places
5 -- bends, you would see a fair amount of residual
6 stress.
7 MEMBER RICCARDELLA: I would assume that
8 they're going to hire an experienced fabricator to
9 fabricate these things that has experience with that
10 and knows how to deal with it and they will do the
11 appropriate design report.
12 Residual stresses in ASME code analyses
13 are secondary stresses, and unless you have a brittle
14 material or a stress corrosion concern, they are not
15 that much of a concern.
16 CO-CHAIR KIRCHNER: Okay.
17 MR. MAKAR: So what I would say is that
18 they are still working with the vendors to develop the
19 fabrication techniques for the tube bundle but the way
20 that that would be addressed is the commitment to
21 follow EPRI guidelines on tube specifications, this
22 material. Because that has a limit that has been
23 found successful on the amount, the tightness of the
24 radius that would require a stress-relieving heat
25 treatment.

1 This, I think, is intent. These steam
2 generators are, I think, intentionally designed to
3 keep all the bends above that requirement to limit
4 residual stress. But that doesn't mean there won't be
5 another type of stress that does lead to a form of
6 degradation. That's for the steam generator --
7 CO-CHAIR KIRCHNER: Yes, that's where I
8 was leading because I was wondering whether or not
9 they would require a heat treatment of some kind to
10 just reduce those residual stresses from fabrication.
11 MR. MAKAR: The guideline that they are
12 following would require you to use stress-relief heat
13 treatment if you were --
14 CO-CHAIR KIRCHNER: Had a tighter --
15 MR. MAKAR: If it was less -- if the
16 radius, the bend radius was less than ten times the OD
17 of the two.
18 CO-CHAIR KIRCHNER: OD of the two, okay.
19 All right, thank you.
20 MEMBER RICCARDELLA: And they're not going
21 to exceed that, even where they bend it to get into
22 these tube sheets?
23 MR. MAKAR: Right.
24 MEMBER RICCARDELLA: That's the criteria?
25 Okay.

1 MR. MAKAR: And some of the U-tubes of
2 course have -- U-tubes in generators are bound to say
3 three inches.
4 MEMBER RICCARDELLA: Yes.
5 CO-CHAIR KIRCHNER: All right, thank you.
6 MEMBER RICCARDELLA: Yes, the bigger
7 picture concern, though, is that all of these
8 guidelines, the EPRI guides, even the material, the
9 best qualified material are still, they are done for
10 a steam generator that has significantly different
11 operating characteristics. And you know it's hard to
12 predict but we just, you know if you waited for
13 experience, you'd never build anything new. So we
14 have to just give it our best shot and see what
15 happens and deal with the OE as it occurs.
16 MR. MAKAR: And we'll talk about that now
17 on the next, the steam generator program.
18 And this review is about the ability to
19 implement a steam generator program capable of
20 maintaining the structural and leakage integrity. And
21 it covers, I mentioned, the plugging criterion. A lot
22 of this program is described in the tech specs. And
23 there are the operational programs you heard about for
24 in-service inspection but also pre-service inspection.
25 And we're looking at those and the -- those items, as

1 well as the ability to inspect the tubes.

2 And there are two COL items in this

3 section. One is to develop and implement the steam

4 generator program and the other is to provide plant-

5 specific information, including the steam generator

6 tube plugging criterion and implementation milestones.

7 And when we approached this, we had many

8 of the same questions you raised earlier. And so we

9 were considering how much information do we need to

10 make a reasonable assurance finding for their

11 inspection for their steam generator program at the

12 design certification stage.

13 And so we understand there are a lot of

14 questions remaining but we considered what they have

15 now is enough for us to review.

16 Next, please.

17 So this, again, is a similar table. On

18 the left side is the same, these unconventional design

19 features. On the right side, it's a little different

20 what we are -- how it affected our review.

21 A big one here is the allowable tube

22 thinning, so the tube plugging criterion that is in

23 the tech specs, how many percent through-wall before

24 the tube has to be plugged or some other criterion.

25 And of course these, as you already noted,

1 many of the design features would affect your ability
2 to detect and size degradation, even assess what
3 degradation you might have. And there may be
4 different kinds of flow effects or loose parts
5 concerns that we have in the operating fleet.
6 CO-CHAIR BALLINGER: Have you made a
7 judgment as to what's the most probable failure mode
8 for the tubes? And based on the most probable failure
9 mode, the kind of leak rate you might expect, as
10 compared to say the most probably failure mode for U-
11 tube steam generator, where we pretty much -- you can
12 have a pretty bad hair day for that.
13 But based on creep collapse, and all of
14 this, and thinning and things like that, are you
15 likely to punch out a piece underneath a support or
16 something? I don't know.
17 MR. MAKAR: Well I don't expect creep to
18 be a -- based on a temperature of creep to be --
19 CO-CHAIR BALLINGER: No.
20 MR. MAKAR: But the most likely
21 degradation mechanism is probably wear. And if there
22 were a failure, it would most likely be at collapse.
23 If there is a collapse of a tube, then it
24 may or may not be associated with a leak. And we did
25 not try, in our review, to account for collapse with

1 or without cracking or through-wall degradation.
2 We're just evaluating this plugging criterion to avoid
3 collapse.
4 So we wouldn't expect, for example, to go
5 in in an inspection and find the tube has collapsed.
6 There is a -- again, with the design specifications
7 for the tubing, it has limits on ovality. You get
8 some in the bending process but not a collapse, if you
9 are designing properly.
10 We have an important interface here with
11 Chapter 3 and the vibration assessment program because
12 our review is focused on things that can be managed
13 with the steam generator program. If there is
14 something that could result in a rapidly propagating
15 failure that couldn't get you through one cycle, then
16 that's where the importance of the vibration
17 assessment program, which looks at other kinds of
18 those rapidly propagating mechanisms.
19 MEMBER REMPE: So again, this isn't my
20 field, so it's probably a dumb question but I think
21 you said there are limits on ovality. Is there a part
22 of the inspections will give you an indicator for your
23 degrading and that limit might be approached?
24 MR. MAKAR: Okay, I'm sorry. The ovality
25 is something that's a result of fabrication.

MEMBER REMPE: Okay, so it's only the pre-inspection that if there's degradation that is associated with ovality, there's no method for detecting it.

MR. MAKAR: Maybe your probe doesn't go through.

MEMBER REMPE: It's probably a real problem by that point.

MR. MAKAR: If eddy current inspection is used, which is likely and that's what they're planning to use, and I think this will lend itself to that with additional development, there are parameters in your eddy current test, such as the fill factor of the probe and its liftoff from the surface. So things that will show up in the data that will tell you the tube changed.

MEMBER REMPE: Okay, that's good. Thank you.

MEMBER RICCARDELLA: Is the ovality limit applied before or after you wind the tubing into a spiral? I mean is it just the tube out of the mill or is it after you wind it?

MR. MAKAR: Post-fab.

MEMBER RICCARDELLA: Post-fab. Okay, good.

1 MR. MAKAR: And these are -- both
2 NuScale's and the staff's evaluations have
3 incorporated ovality into the tube plugging criterion
4 evaluation.
5 Next slide, please.
6 And so the regulations are related here to
7 inspection of the reactor coolant pressure boundary
8 and codes, and the technical specifications,
9 Maintenance Rule, and, again, quality assurance. And
10 there is quite a bit -- the steam generator program,
11 such as the collapse -- the plugging criterion, what
12 the definition of structural integrity and the
13 performance criteria, the structural performance
14 criteria, and the leakage for operational leakage and
15 accident-induced leakage, those three criteria are in
16 the tech specs, as well as the inspection
17 requirements.
18 Next, please.
19 Now a big piece of the guidance here is
20 that all of the operating fleet and now NuScale are
21 committing to the NEI 97-06 guidelines. And this is
22 a framework to address these performance criteria,
23 those three that I just mentioned, structural, and
24 operational leakage, and accident leakage.
25 And the program covers a lot of topics:

degradation assessment, integrity assessment, inspection, tube plugging and repairs, the water chemistry on both sides, and shell side maintenance and reporting.

So this program requires that you postulate the forms of degradation you inspect and then you evaluate the -- you also evaluate the effect of degradation on the structural leakage integrity.

And one way we -- the reg guide we applied here is Reg Guide 1.121, which was developed for first but it can also be applied to collapse of the tubes. And that we considered wear on the outside and cracking was also considered.

The limiting condition was postulating these wear scars. Since the tubes are in compression, the cracking is not as much of a concern as the potential for wear. So with wear on the outside of the tubes, that is the evaluation we did for the plugging criterion.

Next slide, please.

And so what we found as far as inspectability goes, we found that NuScale has already gone through the steps of putting probes through the tubes for the purpose of inspecting the eddy current.

There are a lot of things yet to do in

1 that process but just as far as the design goes, for
2 access to the tubing for eddy current inspection, they
3 have that. There is also access to the tube bundle
4 from the primary side to look at things like the tube
5 sheet crevices to look for loose parts, things like
6 that. And so from that point of view, we considered
7 this design would allow them to implement a steam
8 generator program that is based on NEI 97-06 and the
9 associated EPRI guidelines.
10 They have generic tech specs that are we
11 say appropriately consistent with the standard tech
12 specs. Appropriately because they changed some words
13 to say things like tube failure instead of tube burst.
14 They have a generic tube plugging
15 criterion and it is 40 percent through-wall, which
16 happens to be the same as most plants in the operating
17 fleet. The limiting loading condition is the three
18 times the normal operating differential pressure.
19 And what we found is that that, according
20 to our evaluation, a tube that has that amount of wear
21 will be able to maintain structural integrity, as re
22 delta P.
23 And we also found that it may require some
24 -- that amount of through-wall wear would be
25 associated with a certain amount of length along the

tube. So for collapse, if they have 40 percent through-wall wear on these tubes, from the types of tabs that you saw on the design, about a half-inch wide, that would satisfy the performance criteria for this design. As the wear gets longer, that may reduce the amount of margin on the structural integrity.

MEMBER SKILLMAN: What is the relation between the tab width and the tube wear? You said the tab.

MR. MAKAR: The tab width is half an inch and so the tube is sitting on that half-inch of tab. The evaluation that NuScale did assumed the half-inch wide wear scar. In our evaluation, we assumed a little --

MEMBER SKILLMAN: So you're saying the wear scar plus the internal tube wear.

MR. MAKAR: No. Just if the wear scar was -- if it was 40 percent through-wall but longer along the tube.

MEMBER SKILLMAN: And over what portion of the circumference, what percentage?

MR. MAKAR: These were 66 percent.

MEMBER SKILLMAN: Sixty-six degrees or --

MR. MAKAR: Sixty-six degrees, yes.

MEMBER SKILLMAN: Sixty-six degrees.

1 So you know if you actually had that
2 situation, 40 percent thinning over 66 degrees over
3 some length half-inch and three-quarters of an inch,
4 you may get to a point where you are no longer in a
5 compressive situation where you've got bending
6 stresses that are actually maybe trying to burst that
7 little bubble inward. It might not just be a
8 collapse.
9 MEMBER SKILLMAN: Right, depending on
10 where that is in terms of the mass above it.
11 CO-CHAIR BALLINGER: So you're saying it's
12 an asymmetrical.
13 MEMBER SKILLMAN: Yes, that's just
14 continuity inside of the tube. It's one-sixth of the
15 diameter.
16 CO-CHAIR BALLINGER: That's why I asked
17 whether you could blow out a patch.
18 MEMBER SKILLMAN: Exactly, blow out a
19 patch or blow in. Blow in a patch.
20 CO-CHAIR BALLINGER: But you've got a lot
21 of constraint outside of that area. So it's not
22 acting like a uniform -- you know like a pressure
23 test.
24 MR. MAKAR: I think that is the question
25 is where does -- what's the distinction between an

1 area that gets thin enough from wear and collapses and
2 an area that gets thin enough, forms a crack, and then
3 collapses, and then maybe closes the crack but it's
4 hard to say.
5 CO-CHAIR BALLINGER: But what we're saying
6 I think is if you have a tube with a 50 mil wall,
7 which is what these are, and you have a one-half inch
8 by you say 60 percent around?
9 MR. MAKAR: Sixty-six degrees.
10 CO-CHAIR BALLINGER: Sixty degrees, that's
11 where it gets --
12 MEMBER SKILLMAN: Fifty-six degrees.
13 That's thin to half its size, roughly half its size.
14 CO-CHAIR BALLINGER: Yes, okay.
15 MEMBER SKILLMAN: You know it's almost
16 like a membrane, a constrained membrane blowup kind of
17 -- or blow in.
18 MR. MAKAR: Yes, under operating
19 conditions, you're not going to get blow out.
20 MEMBER SKILLMAN: Pardon me? Yes, blow
21 in.
22 MR. MAKAR: But we do need the tensile
23 stress for cracking. You could imagine that occurring
24 on different ways, once the tube is formed and you get
25 these bent areas that may put an area into tensile.

1 MEMBER RICCARDELLA: That little patch of
2 thin region could be deforming inward and could
3 actually create some tension, I think.
4 MEMBER SKILLMAN: It could tear.
5 MR. MAKAR: On the inside.
6 (Simultaneous speaking.)
7 MEMBER SKILLMAN: This is not a very
8 difficult analysis to see what that is.
9 CO-CHAIR BALLINGER: Here we are doing the
10 analysis for them.
11 MEMBER RICCARDELLA: No, we're testing it
12 out, trying to define the problem.
13 We're just trying to speculate how might
14 a tube in compression fail.
15 MEMBER REMPE: 2690 has huge ductility,
16 huge ductility.
17 MEMBER RICCARDELLA: Yes, that's true.
18 MR. MAKAR: So I'm prepared to talk a lot
19 more about the plugging criterion but we also, the COL
20 applicant is going to be responsible for the PSI and
21 ISI programs. We find that acceptable.
22 And also this 40 percent plugging
23 criterion is a bracketed item in the tech specs,
24 meaning it's something that is going to have to be
25 either changed or affirmed by a COL applicant. So

1 based on plant-specific, site-specific issues, or
2 other information that may come to light. So that
3 will be required to repeat that at the COL applicant
4 stage as well.
5 CO-CHAIR BALLINGER: Just to finish up,
6 that 40 percent through-wall is volumetric, 40 percent
7 volumetric. It's a volumetric defect, 40 percent was
8 derived for a specific failure mode. That may not be
9 the right criteria for the kind of loading that you're
10 having in this situation. It might work out that way
11 but it doesn't mean that it should.
12 MR. MAKAR: Correct.
13 MR. BAVOL: Okay, we'll continue on with
14 5.4.4, Decay Heat Removal.
15 CO-CHAIR KIRCHNER: Could we go back
16 before we get too into thermal hydraulics, to your
17 previous slide?
18 MR. BAVOL: Yes.
19 CO-CHAIR KIRCHNER: So just for a check,
20 we are going to hear about these matters either in
21 Chapter 6 -- it seems like 4 and 5 put off a lot of
22 things until 6 or 3, in terms of environmental
23 performance and challenges because it seems like we're
24 waiving away any kind of -- I'll give an example. We
25 talked about leak-before-break, any jet impingement

1 issues. It seems to me there are a lot of
2 penetrations from reactor vessel to containment vessel
3 that might be vulnerable to those kinds of phenomena.
4 But are you going to pick those up either
5 in Chapter 6 or 3?
6 MR. BAVOL: And I defer to the MEB Branch
7 Chief.
8 MR. LUPOLD: I'm Tim Lupold.
9 In Chapter 3, we're going to look at the
10 nozzles. We look at the nozzles to make sure they're
11 designed in accordance with ASME Code, make sure that
12 they have the proper stress limits, make sure that the
13 fatigue analysis is done, and meet those criteria.
14 CO-CHAIR KIRCHNER: And that would include
15 piping that is inside containment as well?
16 MR. LUPOLD: That includes the piping,
17 yes.
18 CO-CHAIR KIRCHNER: And any other
19 penetrations? We have nitrogen lines, other things.
20 MR. LUPOLD: Yes, so all penetrations in
21 the vessel. That's all part of the ASME design
22 requirements.
23 CO-CHAIR KIRCHNER: Because this is an
24 area where we're a little bit unique and we're seeing
25 different environmental conditions than we would

normally see in the existing fleet, in terms of temperature or exposure. Okay.

MEMBER RICCARDELLA: But Tim, in terms of jet impingement loads, the policy is if you meet leak-before-break, you don't have to consider them but there's an open item because they are not meeting leak-before-break right now, right?

MR. LUPOLD: Correct. If you meet leak-before-break, you don't have to consider jet impingement modes. If it comes back and these lines do not meet leak-before-break criteria, ultimately then, we have to go back and look and consider breaks in those locations and evaluate jet impingement.

MEMBER RICCARDELLA: Or xLPR.

MR. LUPOLD: Or we return it to the best possibility.

MEMBER RICCARDELLA: Okay, good. Thank you.

Okay, Bruce, please proceed.

MR. BAVOL: Okay. I'll turn it over to Boyce Travis.

MR. TRAVIS: I'm Boyce Travis. I was the lead reviewer for the DHR system.

Ignore the numbering. It's 5.4.4 in the SER and 5.4.3 in the FSAR. Feel free to interrupt me

at any time. I know some of you have been waiting for the opportunity to ask questions.

The regulatory basis for the DHRS is pretty comprehensive. The primary finding we're making on the DHRS is the GDC 34, with is the ability to remove and transfer fission product decay heat and other residual heat from the reactor core at a rate such that design limits are not exceeded.

The DHRS is the primary accredited system for a non-LOCA transient during the first 24 hours. Other systems, such as ECCS, will take the primary residual heat removal function for LOCA transients or beyond 24 hours, given the amount of power.

MEMBER CORRADINI: That means by design they purposely transition after 24 hours?

MR. TRAVIS: Yes, due to -- I mean so given that you don't have AC power, which is not safety-related, the ECCS system will actuate at that point in time due to the loss of power, given that the HRS has brought you below the inadvertent block valve set point.

MEMBER MARCH-LEUBA: The block valves will last for 24 hours? So the ECCS system will open then but DHRS is created for the first 24 hours and then conduction through the vessel is created afterwards.

1 MR. TRAVIS: For all -- that's correct.
2 And so for complying with these GDCs, the HRS is
3 located inside containment under the bio-shield,
4 submerged in the reactor pool. So it is still -- the
5 reactor pool is the only shared system for the DHRS.
6 Each module has its own DHRS system.
7 The pool is sized to remove decay heat for
8 all 12 modules at a time. All the components related
9 to the DHRS are seismic Category 1, similar to the
10 pipe. And a unique aspect of DHRS is similar to
11 piping between containment and the exterior isolation
12 valve. The DHRS piping is classified as robust piping
13 not subject to break consideration. So it's a leak-
14 before-break piping outside containment not subject to
15 rupture by analysis.
16 And then in order to demonstrate they meet
17 the criteria, unlike the operating fleet and more
18 similar to other advanced passive light water designs
19 that the committee has seen before, the performance
20 acceptance criteria for the DHRS is to cool to less
21 than 420 degree Fahrenheit in 36 hours, which they
22 demonstrate in the analysis in Chapter 5.
23 MEMBER MARCH-LEUBA: This is common also
24 for NuScale. One failure mode -- we identified -- the
25 moment we were presented with this concept in this

room, we identified two failure modes for the HRS. One is non-condensables and the other is overfilling with inventory.

The non-condensable is taken care of by the alarm on low level and they had a tech spec requirement for limits.

MR. TRAVIS: Yes, and I will add in that for non-condensables the applicants performed sensitivities on a variety of inventory conditions for the DHRS and the licensing basis analysis includes dissolved non-condensables in the DHRS that are substantially higher than what we considered possible for the system.

MEMBER MARCH-LEUBA: And the tech specs has a surveillance requirement that requires it to be --

MR. TRAVIS: That is correct. I don't know if it is 3.7.1.1 or 3.7.1.2.

MEMBER MARCH-LEUBA: I saw it a moment ago.

MR. TRAVIS: Okay.

MEMBER MARCH-LEUBA: Now, the overfilling with inventory is one that we just found out that NuScale is considering for startup events because during startup your secondary of the steam generator

1 will be filled with liquid. And if you are solid at
2 that moment, then you have too much inventory. They
3 are going to resolve that through startup procedures.
4 Now, I have been thinking since they left
5 what happens when you have a different event? You
6 have a scram full power.
7 MR. TRAVIS: Sure.
8 MEMBER MARCH-LEUBA: And feed water
9 continues to run for a minute or two. You overfill
10 the secondary and, at that point, the operator has to
11 isolate. You isolate at the point where the secondary
12 server failed. The HRS does not work and the HRS
13 doesn't work. There has to be some instrumentation
14 then that forces you to open the ECCS, which I don't
15 think you can at high pressure.
16 MR. TRAVIS: Yes, so to clarify, I think
17 the event you are describing is beyond the design
18 basis of the plant. So because there are two feed
19 water isolation valves on each line accredited to
20 prevent the DHRS from overfilling and there is a
21 secondary site isolation, there are a number of
22 different set points that would reach that.
23 MEMBER MARCH-LEUBA: What would trigger
24 that isolation?
25 MR. TRAVIS: So --

1 CO-CHAIR KIRCHNER: Less than 370 degrees,
2 I think.
3 MR. TRAVIS: Yes, so there is like a low
4 -- there are a couple related to steam quality. I'm
5 going to comment on this. I don't have the list in
6 front of me and NuScale has just submitted a change
7 package that are going to re-characterize this
8 secondary site isolation set points as part of an
9 instrumentation change that NuScale is making. So I
10 would have to get back to you with the exact list
11 because they have separated out what constitutes a
12 DHRS actuation and what constitutes a secondary site
13 isolation.
14 But based on what I reviewed for NuScale's
15 analysis in the audit and what's presented in Chapters
16 5 and 15, there are no events in the design basis of
17 the plant where they can overfill the DHRS to the
18 point where it is ineffective.
19 MEMBER MARCH-LEUBA: Including feed water
20 increase?
21 MR. TRAVIS: That is correct. So the feed
22 water increase that is analyzed in 15, increase in
23 feed water flow is analyzed so that they have the
24 limiting amount of inventory added to the DHRS and
25 there is still margin to the available operating

parameters or the available operating effectiveness of the DHRS. And so --

MEMBER MARCH-LEUBA: At least the version of Chapter 15 that I have does not describe that.

MR. TRAVIS: Okay.

MS. SIWY: I can speak a little bit to that because I looked at that transients. So I noticed that as well, so I've been talking with NuScale about that and they are supposed to be addressing that in Revision 3 of the DCA. And I plan to audit the underlying calculations for that.

MEMBER MARCH-LEUBA: They need to be thinking about possible ways to trick this -- fail-proof -- model protection system have to be very simple and very fail-proof. And I would like to know how it works.

MS. SIWY: If I may add, in the analyses that they have performed so far of an overfill analysis, they've assumed failure of one feed water isolation valve and even in the worst case scenario, when the steam generator inventory does grow very high, there is still, at least in their NRELAP 5 analyses, they are seeing that the DHRS is still capable of removing the decay heat that needs to be removed.

1 MR. TRAVIS: And so I audited the
2 sensitivity analyses that NuScale performed for a
3 variety of DHRS conditions and at very low inventory,
4 the DHRS is ineffective because there is not enough
5 transfer. It degrades much more slowly at high
6 inventory conditions, such that you have a much -- it
7 has a much wider band of acceptable performance for
8 lots of inventory as compared to very low inventory.
9 To give you any more detail I think would
10 probably go into a propriety session.
11 MEMBER CORRADINI: If there is a Revision
12 3 coming, we probably need to wait if there is a
13 change in the design.
14 MR. TRAVIS: So yes, the design changes
15 are not -- there are no -- NuScale has assessed the
16 impacts. We have not reviewed the change package
17 fully.
18 MEMBER CORRADINI: Okay.
19 MR. TRAVIS: So I think to comment would
20 be premature.
21 MEMBER CORRADINI: Okay, that's fine.
22 MEMBER REMPE: But to be clear, you've
23 said there is going to be some instrumentation
24 changes. Will it be how they detect water level?
25 MR. TRAVIS: So DHRS -- there are no

1 changes to the instrumentation itself. It is only
2 signal changes, except for the removal of an actuation
3 signal that is not related to the DHRS, if that makes
4 sense.
5 MEMBER MARCH-LEUBA: Where is that
6 described? Because I just read --
7 MEMBER CORRADINI: I think what he's
8 trying to tell you is that it's in a revision they
9 have yet to --
10 MR. TRAVIS: We just got that change
11 package in officially about a week ago. So I
12 definitely cannot point you to the correct location.
13 MEMBER MARCH-LEUBA: Because I just read
14 the whole feed water increase, flow increase section
15 in there. I guarantee that.
16 Okay, so we will have to wait. And this
17 is an open item.
18 MEMBER CORRADINI: Patience is a virtue.
19 MEMBER MARCH-LEUBA: This is going to be
20 an open item, right?
21 MR. TRAVIS: Can you speak to that? Is
22 that an open item?
23 MS. SIWY: Yes, I'm tracking it as an open
24 item in the 15.1.2 SER right now.
25 MEMBER MARCH-LEUBA: And while they are

chastising me here, NuScale submitted the original analysis without considering that event. They have to notify because there was problems their submittal. So there is reason to be a little upset about it, right?

MS. SIWY: They talk to it in a little bit of detail in the submittal but they didn't provide the detailed results, I agree.

MEMBER MARCH-LEUBA: Not in the document I got.

MEMBER CORRADINI: Okay, thank you.

MR. TRAVIS: Any questions on this slide or can I go to the next one?

MEMBER CORRADINI: No, move on.

MR. TRAVIS: Okay. So some key design considerations related to the DHRS, it is a first of a kind system, obviously, for a nuclear plant. As I mentioned earlier, it's sensitive at both low and very high inventory. It degrades much more slowly over higher inventory conditions.

As we discussed, non-condensable gases, for the operating conditions, they assume a conservative amount of dissolved gases in the system and have level sensors to preclude operation outside of those conditions.

During the course of our review, we asked

1 the applicant to implement a first of a kind test for
2 the DHRS to confirm that the as-built system
3 specifications match the analysis for the natural
4 circulation conditions and assumptions they've made.
5 And they've put that into the initial test program for
6 the first plant.
7 And ultimately, the long-term cooling
8 analysis, beyond 24 hours, is via the ECCS system and
9 then conduction to reactor pool, as we discussed
10 earlier.
11 MEMBER CORRADINI: This is something -- I
12 guess it just occurred to me. There's a number of
13 integral tests going on now but do they have an
14 integral, although not necessarily exactly scaled,
15 integral test of a DHRS equivalent at a smaller scale?
16 MR. TRAVIS: There is --
17 MEMBER CORRADINI: I thought there was.
18 MR. TRAVIS: There is a DHRS -- so part of
19 the benchmarking was done on a -- it's an integral
20 DHRS. It's scaled in some sense. It's not scaled
21 equivalent to the reactor module but there is a scale
22 in the primary. So yes, there is a scaled test for
23 the DHRS.
24 MEMBER CORRADINI: Something we will see,
25 just for the members. Thank you.

MR. TRAVIS: And so as part of our review, we reviewed the failure modes and effects analysis for the DHRS. That was provided in our response and is included in the most recent revision of the FSAR.

And like again, as I stated, I audited the analyses related to the DHRS, confirmed it was capable of removing adequate heat with only one train available for the full spectrum of Chapter 15 events.

There is one open item related to the DHRS that is the non-LOCA topical report. Because the analyses that NuScale demonstrates the adequacy of the system were performed using NRELAP, using the methods described in non-LOCA topical report. The acceptance of that report is required before we can make a conclusion on the DHRS system.

MEMBER CORRADINI: And that's still in review.

MR. TRAVIS: That's correct.

MEMBER CORRADINI: Okay.

MR. TRAVIS: Any other questions on DHRS before we go on to the next section?

CO-CHAIR KIRCHNER: I have one question. Have you, in the failure modes and effects analysis, considered failure of the thermal relief valves --

MR. TRAVIS: So --

1 CO-CHAIR KIRCHNER: -- and breaking the
2 siphon effect and just venting out the inventory into
3 containment?
4 MR. TRAVIS: So I'm going to -- I'm not
5 100 percent sure that what I'm going to say is
6 correct. So take this with a grain of salt but I do
7 not believe there are thermal reliefs on the DHRSs
8 itself. Those are on the RCS side.
9 Failure of one thermal relief would make
10 one train of DHRS invalid and they would have access
11 to the other train for all events except steam
12 generator tube rupture.
13 MEMBER CORRADINI: So what's shown in the
14 line diagram is for the --
15 MR. TRAVIS: So I guess --
16 CO-CHAIR KIRCHNER: I'm looking at 5.4-9,
17 steam generator simplified diagram. It looks like at
18 least the intent of whoever drew the picture was to
19 show that those valves are situated at an elevation
20 roughly equivalent to the exit of the steam
21 generators.
22 MR. TRAVIS: Okay, I would have to go back
23 and look at that. Either way, I believe -- and so --
24 CO-CHAIR KIRCHNER: But the steam in that
25 line returned from the condenser.

1 MR. TRAVIS: I would need to look at that.
2 CO-CHAIR KIRCHNER: Okay.
3 MR. TRAVIS: If I can get back to you and
4 look at that figure -- I don't have it in front of me.
5 CO-CHAIR KIRCHNER: No, I just put it out
6 for a question. Could you look at that?
7 MR. TRAVIS: Yes, absolutely. So my
8 recollection is that one of those relief valves can
9 fail. It will make that train of DHRS inoperable
10 because there is no RCS flow. The other train is not
11 hydraulically connected because the two steam
12 generators are hydraulic.
13 CO-CHAIR KIRCHNER: Yes, there's two
14 separate independent trains.
15 MR. TRAVIS: Yes, the two steam generators
16 are hydraulically independent. And so that should not
17 invalidate it but I will take a look at that and get
18 back to you.
19 And I guess we will go on to 5.4.5, which
20 is the exemption for reactor coolant system high-point
21 vents. There are two requirements related to high-
22 point vents for nuclear power plants, one is the TMI
23 item at 50.34(f)(2)(vi), the other is 50.436a, both of
24 which have similar motivations of them such that we
25 require high-point vents for the RCS so that the

1 accumulation of non-condensables cannot interrupt the
2 function of emergency core cooling or other systems.
3 And so as part of the lessons learned from
4 TMI, the 50.34(f)(2)(vi) requirement was imposed and
5 we require that nuclear power plants provide a means
6 to permit venting.
7 Functionally, NuScale's ECCS system is
8 going to perform that function such that -- so they
9 have a non-safety-related high-point vent in the
10 vessel head that is not accredited for meeting those
11 regulations. The ultimate long-term cooling response
12 is for NuScale to vent ECCS. There are three vents in
13 the pressurizer space, such that they can
14 hydraulically connect the containment and reactor
15 vessel. And so those ECCS valves are kind of
16 functionally performing the requirements that we've
17 associated with this and, therefore, the staff is
18 going to allow the exemption pending the closure of an
19 open item on the next slide.
20 So during the course of the reviewing this
21 analysis -- so the analyses were supporting this.
22 There was one item related to ECCS performance in the
23 presence of non-condensable gases. That's being
24 evaluated as part of the LOCA topical report.
25 MEMBER CORRADINI: I don't understand

that. Are you saying that they release non-condensables but that somehow defeats the containment coupling to the --

MR. TRAVIS: So I will say that no, that's not the expectation but as part of the LOCA review and the containment pressure review, both of which are kind of related, that the condensation function in the containment is impaired by non-condensable gases. So --

MEMBER CORRADINI: Not much.

MR. TRAVIS: No, I 100 percent agree with you. It's a very small impact.

MEMBER CORRADINI: Really small. There's two public tests that were done by Oregon State, preliminary testing that showed it's less than about a 20 percent effect.

MR. TRAVIS: Yes, I agree with you.

MEMBER CORRADINI: Okay.

MR. TRAVIS: There should be no impact but in the interest of making sure we have all the information in front of us, before we make our conclusion, we want to make sure the LOCA topical report gets approved because that was the basis for the analysis that was reviewed as part of this.

MEMBER CORRADINI: Okay, thank you.

1 MR. TRAVIS: I don't anticipate any
2 impacts but it is kind of a formal open item.
3 As part of this review, we also looked at
4 DHRS. We considered limiting inventory of non-
5 condensable gases in both the RCS and the DHRS system
6 and there is no scenario in which non-condensables --
7 there's a sufficient amount of non-condensables can
8 interrupt flow such that the systems they have
9 available do not provide for available cooling,
10 whether via ECCS or DHRS.
11 And as I said earlier, functionally, the
12 RVVs act as a head vent and so, therefore, allowing
13 the coupling of the RCS and containment meets the
14 intent of the regulation.
15 MS. SIWY: Hi, I'm Alex Siwy from Reactor
16 Systems. I'm covering Section 5.4.6 of the staff's
17 SER, which discusses exemptions related to the
18 pressurizer components, in particular, emergency power
19 supplies for the pressurizer heaters and pressurizer
20 level indication.
21 There were promulgated as TMI requirements
22 in 10 CFR 50.34(f)(2)(xiii) and (xx) respectively, as
23 shown on this slide.
24 NUREG-0578, TMI 2 Lessons Learned Task
25 Force Status Report and Short-term Recommendations,

clarifies that the underlying purpose of these two TMI requirements is to ensure natural circulation core cooling following a loss of offsite power, while at the same time decreasing reliance on the ECCS to accomplish that function because of concerns that the ECCS would be called upon more than what is assumed in its design basis.

These two regulations were promulgated with traditional large PWRs in mind. Next slide, please. However, the NuScale design is fundamentally different from traditional PWRs in a variety of ways but the key one is that the NuScale design is based on natural circulation cooling during normal and off-normal conditions.

In addition, the applicant does not credit pressurizer heaters to maintain natural circulation following a loss of offsite power and even assumes that they trip off in the transient and accident analyses.

After a loss of offsite power, the DHRS removes the decay heat via the steam generators and the colder, denser fluid leaving the steam generators helps to drive the natural circulation within the RCS LOOP.

In addition, there are no pressurizer

1 block or relief valves in the NuScale design, which
2 renders those portions of 10 CFR 50.34(f)(2)(xx)
3 irrelevant.
4 The staff considered all of these factors
5 in its review of the exemption requests and finds that
6 the pressurizer heater operation is not required
7 following a loss of offsite power because the NuScale
8 design maintains natural circulation without it, at
9 least in the short term.
10 Furthermore, the ECCS doesn't operate
11 within the first 24 hours following a loss of offsite
12 power.
13 In addition, the main reason to have
14 pressurizer level indication would be to maintain
15 pressure control for natural circulation core cooling
16 using the pressurizer heaters. And since there's no
17 reliance upon the pressurizer heaters, then there's
18 really no need for safety-related power to the level
19 indication.
20 For these reasons, the staff finds that
21 the NuScale design meets the underlying purpose of the
22 relevant rules and the design also meets the other
23 relevant requirements regarding exemptions.
24 As a result, the staff recommends granting
25 these two requested exemptions.

1 Are there any questions?

2 MEMBER SUNSERI: Well, the purpose of

3 level in the pressurizer, a level indication it seems

4 to me there is another reason and that's to ensure

5 that you're not drawing a bubble in another place that

6 would preclude the natural circulation, not just to

7 cover the pressurizer heaters, right?

8 MS. SIWY: That is --

9 MEMBER SUNSERI: If your pressurizer level

10 was going sky high, you were drawing a bubble

11 someplace else that might be impeding the flow, right?

12 MS. SIWY: Yes, I suppose that's true.

13 And there still is level indication but I mean in the

14 events of a loss of offsite power, I think we have or

15 there will be provisions to vent gases or steam that

16 built up.

17 CO-CHAIR KIRCHNER: That would be

18 activation of the RVVs, right, in the final analysis?

19 MS. SIWY: Yes, so there are the RVVs

20 that, as Boyce mentioned, could accomplish that

21 function.

22 CO-CHAIR KIRCHNER: Okay, thank you.

23 Members, any further questions of the

24 staff before we go to public comment?

25 Okay, Mike, do we have -- while the line

is being opened, do we have anyone here in the audience who wishes to make a comment? Please come up to the microphone, state your name, and comment.

Seeing none, okay, we'll wait for the line.

MEMBER CORRADINI: She's ready. I think she's got it. So you turn up the volume.

MR. SNODDERLY: Is there anyone from the public on the line?

CO-CHAIR KIRCHNER: Is there anyone on the open line from the public who wishes to make a comment? If so, please state your name and please make your comment.

Okay, thank you.

MEMBER CORRADINI: So I was going to ask do the members have things that they want to discuss in closed session because NuScale is ready to answer questions, if we have them.

And did you have things you wanted to mention in closed session?

MR. NOEL: Derek Noel, NuScale. I don't think we have anything that we need to present in a closed session but we were open if you had any questions of us.

MEMBER CORRADINI: So, members?

MEMBER SKILLMAN: I have an item but I don't think it's closed session.

MEMBER CORRADINI: Well, we'll do that. I'm going to take notes for the full committee meeting but I wanted to make sure first if there was anything in closed session.

If not, maybe we should just go around or do you have a --

MEMBER SKILLMAN: We can go around.

MEMBER CORRADINI: Okay.

MEMBER SKILLMAN: I'll wait.

MEMBER CORRADINI: Member Brown.

MEMBER BROWN: No questions or comments.

MEMBER RICCARDELLA: I don't have any.

MEMBER SKILLMAN: A request for clarification. I asked the question about the sizing of relief on primary based on the pressure capability of CVCS. The gentleman said there are isolation valves. That's accurate but the isolation valves are generally intended, it seems, for preventing demineralized water from getting into the reactor coolant system. It does not appear as though the isolation valves are really intended to halt CVCS flow to prevent over-pressurization of the primary, given CVCS is a 2250 and primary is a 2100 absolute.

1 So I would like to have that clarified.
2 MEMBER CORRADINI: Now?
3 MEMBER SKILLMAN: No, later is fine.
4 MEMBER CORRADINI: So this is from
5 NuScale.
6 MEMBER SKILLMAN: Actually, staff made the
7 comment.
8 MR. SCHMIDT: This is Jeff Schmidt from
9 Reactor Systems.
10 It's a level, so it would prevent -- once
11 you reach the level set point, whether it be pure
12 water or borated water, it's going to isolate the CVCS
13 system.
14 MEMBER MARCH-LEUBA: I verified it in
15 Chapter 15. The set point is 80 percent on the
16 pressurizer level. If the level reaches 80 percent of
17 the pressurizer, you close the valves.
18 MEMBER SKILLMAN: That's in 15?
19 MEMBER MARCH-LEUBA: That's in Chapter 15.
20 MEMBER SKILLMAN: Okay, I didn't look in
21 15. I was in 6 and then 5.
22 MEMBER MARCH-LEUBA: Yes, I've been doing
23 through Chapter 15 the whole time.
24 MEMBER SKILLMAN: Very good. I'm
25 satisfied. Thank you.

1 I'm done. Thank you.

2 MEMBER SUNSERI: I have no questions. I

3 appreciate the staff's and NuScale's presentations.

4 Thank you all.

5 MEMBER CORRADINI: Joy?

6 MEMBER REMPE: So today, in the earlier

7 discussions this morning, we learned that instead of

8 using DP cells that the applicant is exploring other

9 technologies for water level measurement and I believe

10 they mentioned some laser-based technology on the

11 record.

12 And both Charlie and Dick said hey, that's

13 not in Chapter 7. And I would like to ask the

14 applicant to provide some more detailed information

15 about what is currently envisioned and how it's been

16 previously used in other types of environments where

17 it is envisioned that it will be used. That's not

18 only the pressurizer water level but the containment

19 water level and the reactor water level.

20 Because this is a different design and if

21 they are exploring something that's not been used

22 within the reactor vessel more, I'd like to understand

23 what -- you know has the staff -- I'd like to

24 understand what assurance. I know you don't have to

25 specify the specific sensor in the DCA stage but what

1 types of requirements are in place now? Because,
2 again, this affects not only your chapter today but
3 your Chapter 15 is relying on this, Chapter 19, and if
4 the conditions -- but the DP said the conditions would
5 have changed but apparently they've gotten rid of that
6 -- the conditions for the reference would have changed
7 but they have gotten rid of that issue but I would
8 like to know if new issues have been introduced.
9 Is that clear enough of a question to ask
10 for?
11 MEMBER CORRADINI: You're nodding yes.
12 MEMBER REMPE: You don't have to answer by
13 any means now but do you understand what I'm asking?
14 MR. SEXTON: Yes, this is Colin Sexton.
15 We understand what you're asking. We don't have the
16 people in the room today to discuss the specifics of
17 the requirements.
18 MEMBER REMPE: That's fine.
19 MR. SEXTON: What we can say is that we
20 have safety-related level instruments. We have a
21 technical report and RAI response that specified that
22 those are radar, which is a technology called guided
23 wave radar. And we've specified only in the DCA there
24 uncertainty, plus or minus uncertainty.
25 So as far as the requirements, we could

1 try to get you in touch with some of our folks that
2 are working on that.
3 MEMBER REMPE: Especially with the
4 experience base for the conditions, not just that
5 they've been used in the plant somewhere else, like
6 maybe a spent fuel pool, but if they've ever been used
7 in the community and pressures that they're going to
8 be used at and more difficult to do service on.
9 MR. SEXTON: Yes, we have a whole program
10 about qualifying our instruments. And we aren't the
11 people that know about that --
12 MEMBER REMPE: That's fine.
13 MR. SEXTON: -- but we can get you in
14 contact with them.
15 MEMBER REMPE: That would be appreciated.
16 Thank you.
17 MEMBER BLEY: Nothing more, professor.
18 CO-CHAIR BALLINGER: Nothing more.
19 MEMBER MARCH-LEUBA: Yes, I have another
20 request for the full committee information that I
21 would like to have is if you can describe after a
22 scram what happens to feed water flow.
23 Is it an alternated function that you will
24 trip the pumps, or is it a mono-operation, or is it
25 just an assumption of Chapter 15 that you are going to

1 transfer to the HRS, when in reality, you plan to
2 continue to operate on feed water?
3 If you could just have a slide after a
4 scam what happens to feed water flow and why. You
5 don't have to say anything now. During the full
6 committee meeting in May, have a slide on feed water
7 flow after a scam.
8 MR. SEXTON: This is Colin Sexton, again.
9 Could we get a clarification?
10 This is a scram where you still have
11 access to cooling by the feed water system, is that
12 what you're saying?
13 MEMBER MARCH-LEUBA: Tell me all the
14 possible scenarios.
15 MR. SEXTON: Okay.
16 MEMBER MARCH-LEUBA: And the other
17 question, speaking of feed water, we asked earlier if
18 there is any tools, a bypass valve, so you are able to
19 control feed water at low flows, one or two percent.
20 Thank you.
21 CO-CHAIR KIRCHNER: All right, I have one.
22 MEMBER CORRADINI: I was going to go to
23 you.
24 CO-CHAIR KIRCHNER: Thank you.
25 MEMBER CORRADINI: That's okay.

1 CO-CHAIR KIRCHNER: Okay, Bruce, you did
2 not use your backup slide number 40, which is the
3 leak-before-break. I assume that's because you have
4 resolution in progress with the applicant about how
5 they are going to deal with this in tech spec space.
6 But I just have -- you don't have to
7 answer today but given the uniqueness of the design,
8 I'm just -- I'm thinking about all the penetrations,
9 reactor vessel to containment vessel and the potential
10 for cracks. And I'm not thinking of the typical
11 cracks, stable crack growth, no break, and then you
12 have the leak-before-break.
13 I'm thinking of things like the welds
14 going at the vessels and that would be either stress,
15 or fatigue, or corrosion because a prior leakage that
16 was below the limits, boron accumulation, whatever the
17 units are going to go in and out of the water,
18 although I don't know which of that external piping
19 and penetrations will be exposed to flooding and then
20 dry out during operation.
21 But that would be my concern and it's a
22 little bit different than just the traditional leak-
23 before-break with a split in the pipeline kind of
24 issue. And those of kind of breaks go
25 catastrophically if they happen. It could be a very

1 small crack that propagates because of the stress or
2 such.
3 So perhaps this is more of a Chapter 3-
4 type question.
5 MR. SEXTON: And that's really what I was
6 going to --
7 MEMBER CORRADINI: I was going to say, you
8 referenced 363.
9 CO-CHAIR KIRCHNER: Yes, so that will be
10 presented in July or June -- when are we doing that?
11 MEMBER CORRADINI: June. Chapter 3 is in
12 June.
13 CO-CHAIR KIRCHNER: Okay.
14 MEMBER CORRADINI: Three, six and fifteen
15 are altogether.
16 CO-CHAIR KIRCHNER: Could I ask that you
17 cover that in detail in that June meeting?
18 MR. BAVOL: We can, yes.
19 CO-CHAIR KIRCHNER: Thank you. That's all
20 I have.
21 MEMBER CORRADINI: So I wanted just to
22 come back to the members and make sure that they see
23 where we're going with this is that we are planning to
24 have an interim letter in May on 4 and 5.
25 There are a number of open items. At

1 least my intent to work with Ron and Walt is not to
2 relive the open items, to essentially identify them.
3 If there are significant things that you want to
4 identify above and beyond the open items, please send
5 us a paragraph or two so that we understand what your
6 issues are and we can fold them into the letter.
7 But there are a number of items. So I'm
8 not sure we need to relive that. I think the SEs did
9 a good job of that.
10 Other than that, I don't have anything
11 else.
12 CO-CHAIR KIRCHNER: No, nothing here.
13 Ron, any further comments?
14 Anything else from the members?
15 Then let us thank both the applicant and
16 the staff for your presentations, very informative.
17 And with that, we are adjourned.
18 (Whereupon, the above-entitled matter went
19 off the record at 5:12 p.m.)
20
21
22
23
24
25

April 10, 2019 Docket No. 52-048

U.S. Nuclear Regulatory Commission
ATTN: Document Control Desk
One White Flint North
11555 Rockville Pike
Rockville, MD 20852-2738

SUBJECT: NuScale Power, LLC Submittal of Presentation Materials Entitled "ACRS Presentation: Chapter 4, Reactor Overview," PM-0419-65096, Revision 0

The purpose of this submittal is to provide presentation materials to the NRC for use during the upcoming Advisory Committee on Reactor Safegrards (ACRS) NuScale Subcommittee Meeting on April 17, 2019. The materials support NuScale's presentation of Chapter 4, "Reactor," of the NuScale Design Certification Application.

The enclosure to this letter is the nonproprietary version of the presentation entitled "ACRS Presentation: Chapter 4, Reactor Overview," PM-0419-65096, Revision 0

This letter makes no regulatory commitments and no revisions to any existing commitments.

If you have any questions, please contact Matthew Presson at 541-452-7531 or at mpresson@nuscalepower.com.

Sincerely,

Zackary W. Rad
Director, Regulatory Affairs
NuScale Power, LLC

Distribution: Robert Taylor, NRC, OWFN-8H12
Michael Snodderly, NRC, TWFN-2E26
Samuel Lee, NRC, OWFN-8H12
Gregory Cranston, NRC, OWFN-8H12
Bruce Bavol, NRC, OWFN-8H12

Enclosure: "ACRS Presentation: Chapter 4, Reactor Overview," PM-0419-65096, Revision 0

Enclosure:

"ACRS Presentation: Chapter 4, Reactor Overview," PM-0419-65096, Revision 0

NuScale Power, LLC
1100 NE Circle Blvd., Suite 200 Corvallis, Oregon 97330 Office 541.360-0500 Fax 541.207.3928
www.nuscalepower.com

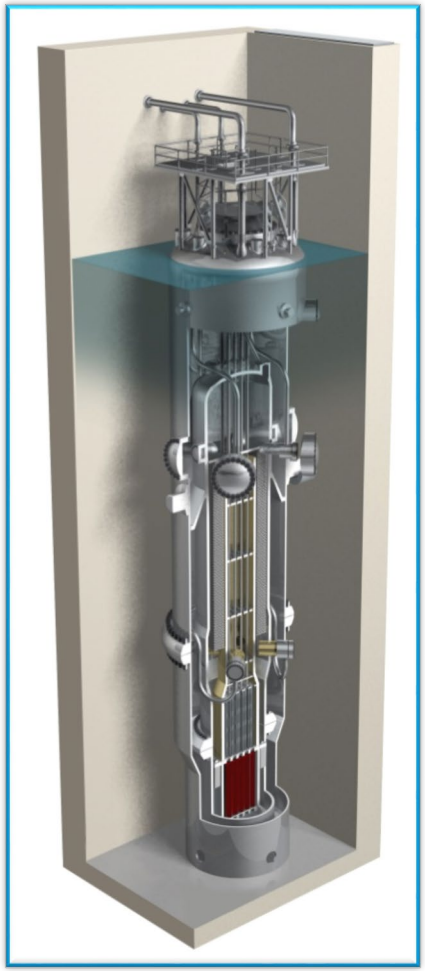

ACRS Presentation: NuScale Chapter 4, Reactor Overview

April 17, 2019

PM-0419-65096
Revision: 0

Copyright 2019 by NuScale Power, LLC.

Template #: 0000-21727-F01 R4

Presentation Team

Larry Linik

Fuels Engineer

Allyson Callaway

Supervisor, Nuclear Analysis

Ken Rooks

Safety Analysis Engineer

Matthew Presson

Licensing Engineer

Copyright 2019 by NuScale Power, LLC.

Chapter 4: Reactor

Section	Title
4.1	Summary Description
4.2	Fuel System Design
4.3	Nuclear Design
4.4	Thermal and Hydraulic Design
4.5	Reactor Materials
4.6	Functional Design of Control Rod Drive System

Copyright 2019 by NuScale Power, LLC.

4.1 – Summary Description

- 160 MW Thermal Integral Natural Circulation PWR
- 37 NuFuelHTP2™ Fuel Assemblies
- 16 Hybrid AIC/B_4C Control Rods

NuScale Reactor Design Parameters	
Key Reactor Parameter	**Value**
Core thermal output (MWt)	160
System pressure (psia)	1850
Inlet temperature (°F)	497
Core average temperature (°F)	543
Average temperature rise in core (°F)	100
Best estimate flow (lb/hr)	4.66E+06
Core bypass flow (%)(best estimate)	7.3
Average linear power density (kw/ft)	2.5
Peak linear power for normal operating conditions (kw/ft)	5
Normal operation peak heat flux (Btu/hr-ft2)	170,088
Total heat flux hot channel factor, FQ	2
Heat transfer area on fuel surface (ft2)	6275.6
Normal operation core average heat flux (Btu/hr-ft2)	85,044
Core flow area (ft2)	9.79
Core average coolant velocity (ft/sec)	2.7

Copyright 2019 by NuScale Power, LLC.

4.2 – Summary Description

- NuScale design based on Framatome's proven US 17x17 PWR Technology
- Over 1500 17x17 HTP fuel assemblies with maximum burnup of 54 GWd/mTU
- NuScale design features:
  - Zircaloy-4 HTP™ upper and intermediate spacer grids
  - Inconel 718 HMP™ lower spacer grid
  - Coarse-mesh filter plate on bottom nozzle
  - Zircaloy-4 MONOBLOC™ guide tubes
  - Quick-disconnect top nozzle
  - Alloy M5® fuel rod cladding

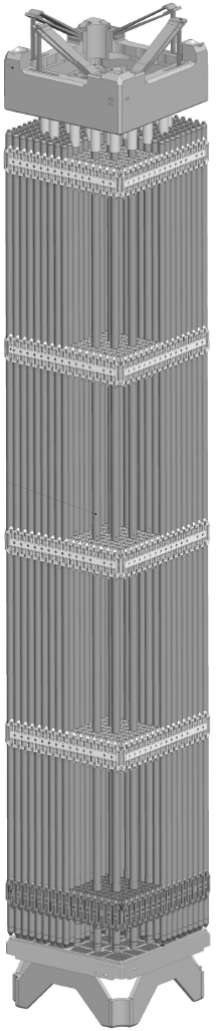

Copyright 2019 by NuScale Power, LLC.

4.2 – Fuel Assembly Design

- 17x17 HTP™ Spacer Grid Design
  - Zircaloy-4 strip
  - Proven Grid-to-Rod-Fretting (GTRF) resistance across many US PWRs
  - Multiple (8) line contacts on each fuel rod
  - Flow channels to promote flow mixing

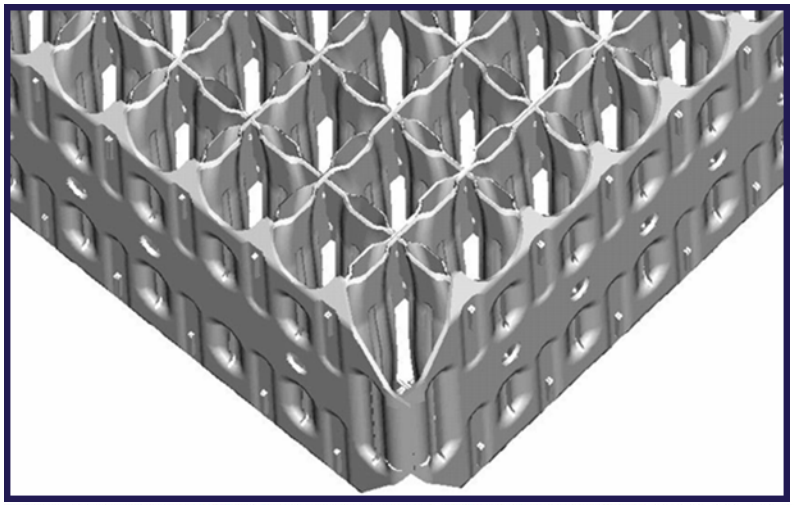

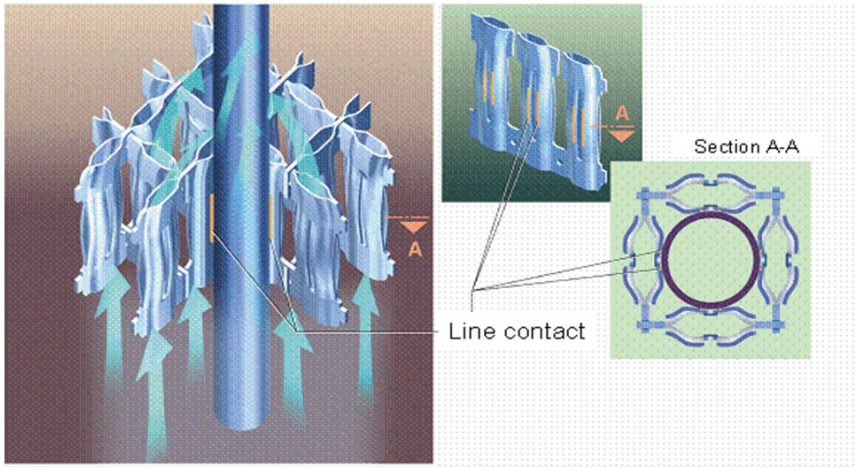

Copyright 2019 by NuScale Power, LLC.

4.2 – Fuel Assembly Design

- 17x17 HMP™ Spacer Grid Design
  - Alloy 718 strip
  - Similar construction to HTP spacer grids
  - Straight channels

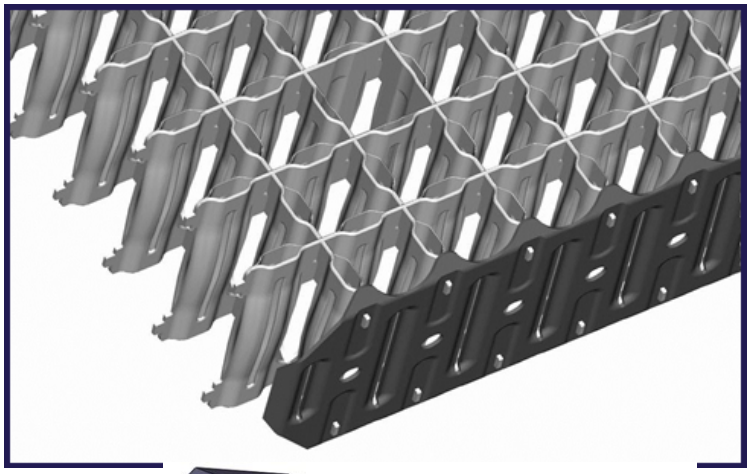

- Coarse Mesh Bottom Nozzle
  - 304 ss Frame
  - Alloy 286 Filter plate (for debris capture)
  - Use in several US 17x17 PWR plants with no debris failures

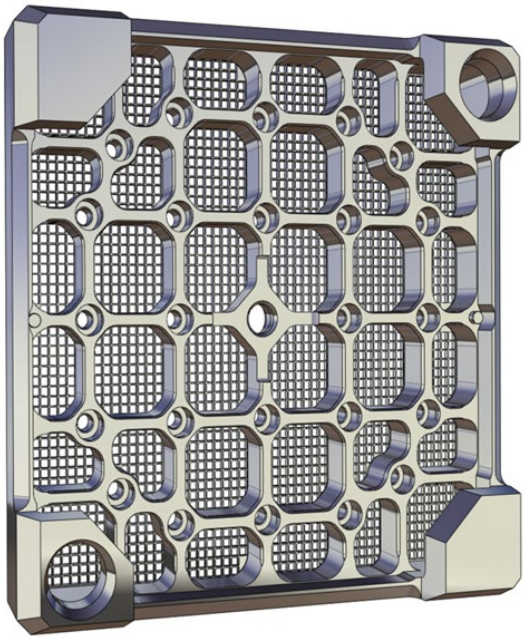

Copyright 2019 by NuScale Power, LLC.

4.2 – Design Basis

TR-0116-20825-P-A, Rev. 1, *Applicability of AREVA Fuel Methodology for the NuScale Design*

SRP Criteria Review Summary		
Analysis	SRP 4.2 Acceptance Criteria	Framatome Topical Report
Shipping And Handling Stress Analysis	1.A.i	EMF-92-116(P)(A)
Fuel Assembly/Component Stress Analysis	1.A.i	
FIV Assessment	1.A.iii	
Axial Growth (Rod and Assembly)	1.A.v	
Fuel Lift Analysis	1.A.vii	
Internal Hydriding	1.B.i	
Clad Stress Analysis	1.A.i	BAW-10227P-A
Fuel Rod Buckling Analysis	1.A.i	
Clad Fatigue Analysis	1.A.ii	
Clad Corrosion Analysis	1.A.iv	BAW-10231P-A
Fuel Rod Internal Pressure	1.A.vi	
Fuel Centerline Melt Analysis	1.B.iv	
Transient Clad Strain Analysis	1.B.vi	
Clad Creep Collapse Analysis	1.B.ii	BAW-10084P-A BAW-10227P-A
Rod Bow Evaluation	1.A.v	XN-75-32(P)(A)

Copyright 2019 by NuScale Power, LLC.

4.2 – Design Basis

TR-0716-50351-P, Rev. 0, *NuScale Applicability of AREVA Method for the Evaluation of Fuel Assembly Structural Response to Externally Applied Forces*

SRP Criteria Review Summary		
Analysis	SRP 4.2 Acceptance Criteria	Framatome Topical Report
LOCA/Seismic Stress Analysis	Appendix A	ANP-10337P-A

Copyright 2019 by NuScale Power, LLC.

4.2 – Fuel Testing

- BOL/EOL testing to characterize the mechanical response of the fuel assembly for Seismic/LOCA calculations
  - Axial Stiffness Testing
  - Lateral Pluck Testing
  - Lateral Stiffness Testing
  - Forced Vibration testing
  - Vertical Drop testing
- Life and Wear testing
  - 1,000-hour test to characterize the grid to rod fretting performance of the fuel

Copyright 2019 by NuScale Power, LLC.

4.2 – Fuel Testing

- Hydraulic Flow Testing to determine pressure drop and lift characteristics
  - Flow Lift Testing
  - Pressure Drop Coefficient Testing
- Mechanical testing of bottom nozzle
  - Develop load/deflection data to determine load limits

Copyright 2019 by NuScale Power, LLC.

4.2 – Control Rod Design

- CRA design based on Framatome's proven US 17x17 PWR Technology
  - Hybrid design – B_4C and AIC absorbers
  - 24 control rods with Stainless Steel cladding
  - One-piece cast stainless steel spider
  - Standard 17x17 rod configuration
  - Flex joint formed by the combination of the pin, nut, upper end plug and spider boss

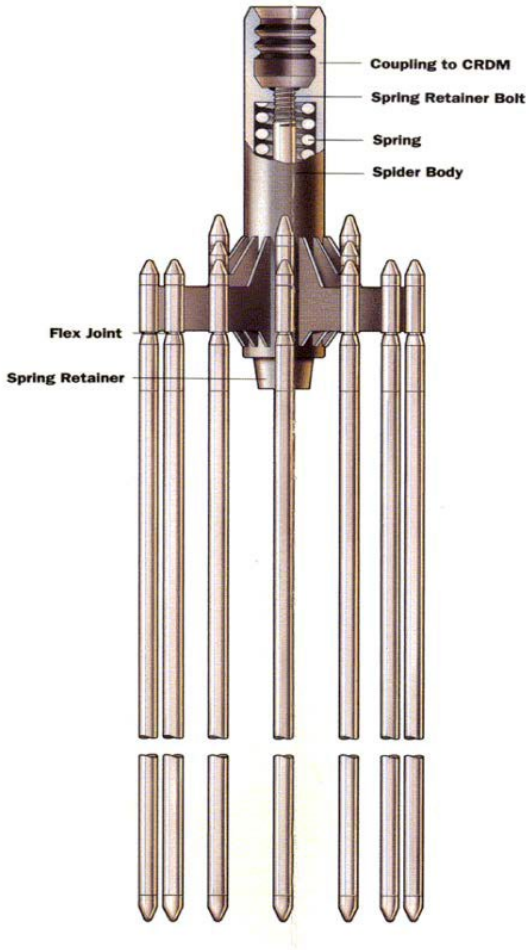

Parameter	Value
CRA total weight (lb)	43
CRA total height (inch)	94.37
Control rod length – short/medium/long (inch)	87.065 / 87.425 / 87.875
Control rod outer diameter (inch)	0.381
Control rod inner diameter (inch)	0.344
Control rod bottom end plug length (inch)	1.913
B4C outer diameter (inch)	0.333
B4C stack length (inch)	62.0
Ag-In-Cd outer diameter (inch)	0.336
Ag-In-Cd stack length (inch)	12.0
Height of CRA spider assembly (inch)	10.387
CRA shaft outer diameter (inch)	1.804

Copyright 2019 by NuScale Power, LLC.

4.2 – Control Rod Design

- CRA Analyses
  - Cladding stress and strain
  - Cladding creep
  - Spider stress due to shipping and SCRAM
  - Absorber melt
  - Rod internal pressure
  - Rod and spider spring loading due to SCRAM and absorber growth

Component	Material
Spider	304L stainless steel
Rod end plugs	308L stainless steel
Cladding	304L stainless steel
Solid spacer, lock pin, nuts, tension bolt	304L stainless steel
Spring retainer	17-4 PH stainless steel
Spider spring	Alloy 718
Control rod plenum spring	302 stainless steel
Absorber materials	80% Ag - 15% In - 5% Cd and B4C
Stack support	Alloy X750

Copyright 2019 by NuScale Power, LLC.

4.2 – Control Testing

- CRA Drop Alignment Test
  - Limiting drop

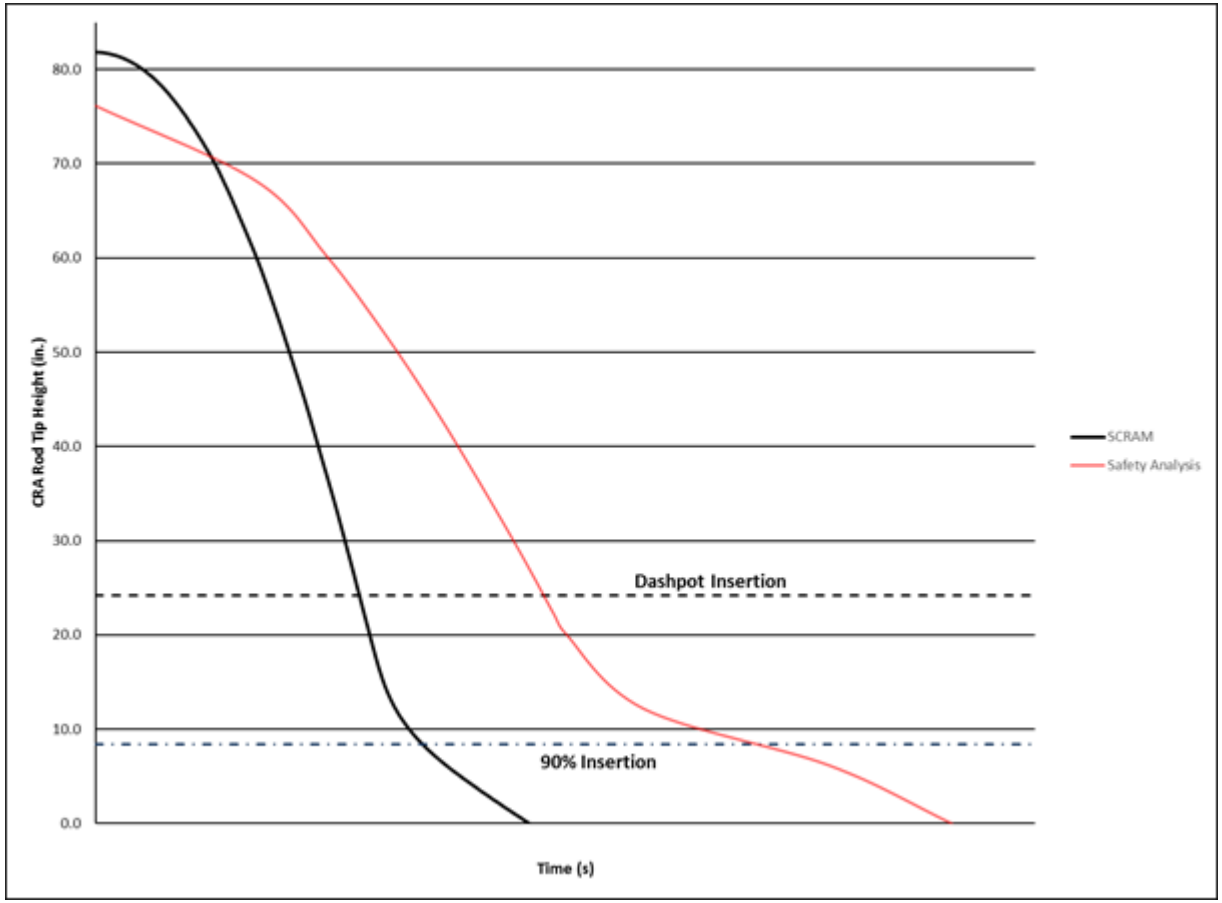

Copyright 2019 by NuScale Power, LLC.

4.2 – Conclusion

- Proven Framatome 17X17 components
- NRC Accepted Framatome codes and methods
- Standard Framatome fuel design, analysis, prototype fabrication, and testing
- Standard CRA design, analysis, and testing
- Both fuel and CRA designs are essentially reduced height versions of current designs

Copyright 2019 by NuScale Power, LLC.

4.3 – Design Basis and Methods

- Core design conforms to NUREG-0800, SRP 4.3 guidance
- Latest version of Studvik's Core Management Suite (CMS5)
  - CASMO5 and SIMULATE5 steady-state neutronics software
  - CMS5 analytical methods for neutronic analysis are approved for use
  - Topical Report TR-0616-48793-P-A "Nuclear Analysis Codes and Methods Qualification"

Copyright 2019 by NuScale Power, LLC.

4.3 – Nuclear Design

- Fuel Cycle Design
  - 2-year, 3-batch cycle
  - Out-to-in fuel shuffle
  - Gadolinia burnable absorber
- Equilibrium Core
  - Reference design and analysis in DCA
  - Equilibrium core design is representative; used for demonstration of methods
  - Limits placed on this core design are applied to the design of all cycles
  - Initial, transition, and equilibrium cycles must meet analyzed limits

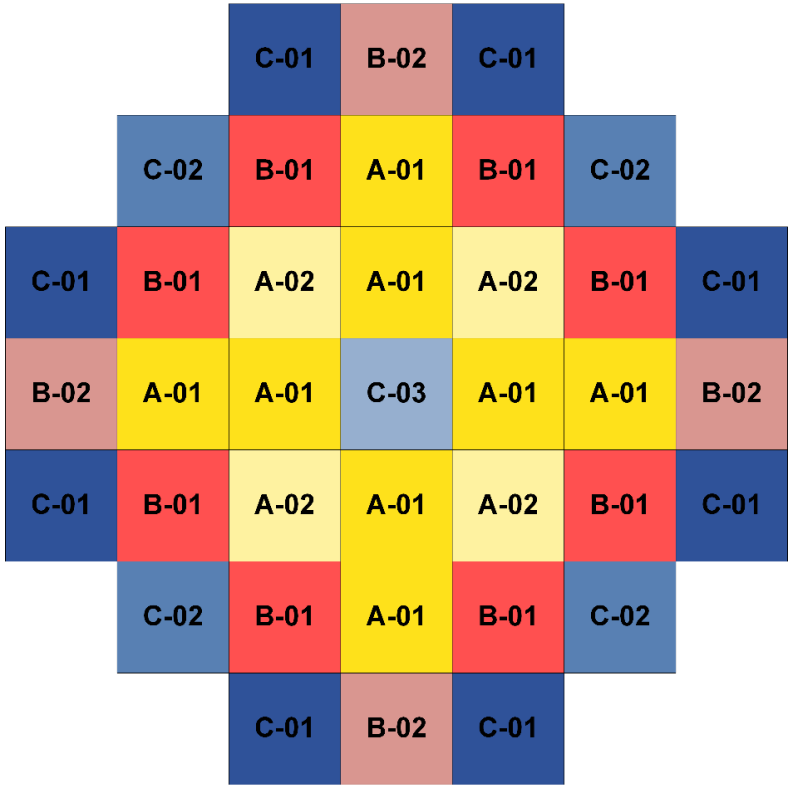

A-01: Batch A Type 1, 4.05 wt% ^{235}U
A-02: Batch A Type 2, 4.55 wt% ^{235}U, with Gadolinia
B-01: Batch B Type 1, 4.05 wt% ^{235}U
B-02: Batch B Type 2, 4.55 wt% ^{235}U, with Gadolinia
C-01: Batch C Type 1, 4.05 wt% ^{235}U
C-02: Batch C Type 2, 4.55 wt% ^{235}U, with Gadolinia
C-03: Batch C Type 3, 2.60 wt% ^{235}U
A – Twice burned, B – Once burned, C – Fresh

Copyright 2019 by NuScale Power, LLC.

4.3 – Core Design Limits

- Cycles are designed to meet constraints and requirements
  - Energy output and burnup
  - Enrichment limits, zoning, and gadolinia loading
- Core design limits are verified for each cycle to confirm the safety analysis bases and ensure specified acceptable fuel design limits (SAFDLs) are not exceeded
  - Moderator temperature and Doppler reactivity coefficients
  - Kinetics parameters
  - Critical and refueling boron concentration
  - Axial and radial peaking
  - Shutdown margin and long term shutdown capability
  - Event-specific limits (i.e. power peaking)
- Core design limits are set to ensure that sufficiently conservative values are analyzed

Copyright 2019 by NuScale Power, LLC.

4.3 – Core Power Distributions

- Power distributions are protected by monitoring to ensure that limits are not exceeded during normal operation
- Control rod assemblies (CRAs) are arranged into regulating and shutdown banks
- The power dependent insertion limits (PDILs) and axial offset (AO) window ensure axial and radial peaking are within design limits
- The NuScale power module is stable with respect to axial and radial xenon imbalances due to small core size, H/D ratio

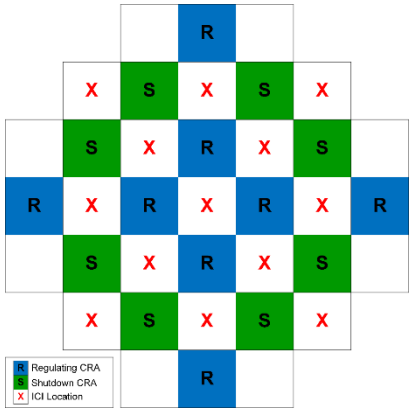

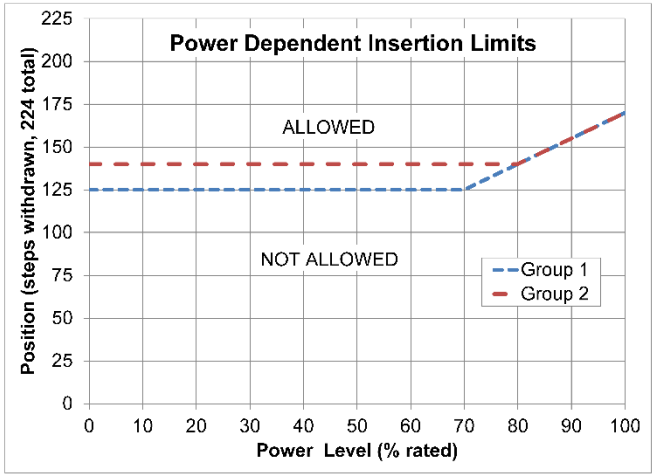

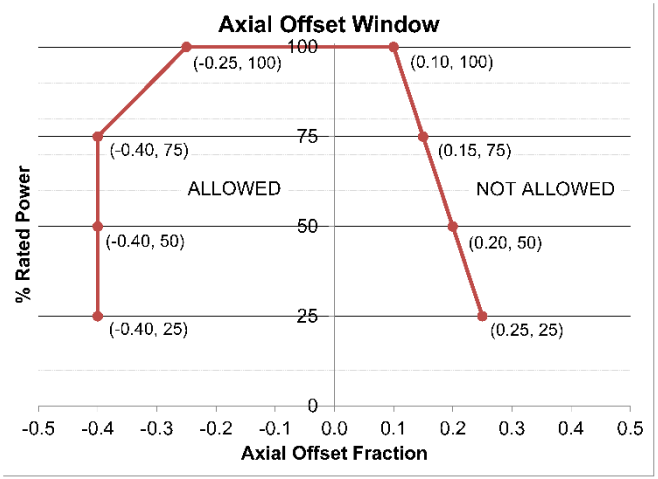

Copyright 2019 by NuScale Power, LLC.

4.3 – Shutdown Margin

- Shutdown Margin (SDM)
  - The instantaneous amount of reactivity by which the reactor is subcritical, or would be subcritical from its present condition, assuming all CRAs are fully inserted with the worst CRA assumed stuck out of the core.
  - Power defect, temperature defect to hot zero power, margin for uncertainties, WRSO, no boration
- Long Term Shutdown (LTSD)
  - The instantaneous amount of reactivity by which the reactor is subcritical, or would be subcritical from its present condition, assuming all CRAs are fully inserted and the RCS is cooled to equilibrium conditions.
  - Power defect, temperature defect to pool temperature, margin for uncertainties, all rods in, no boration
- Distinct definitions for SDM and LTSD establish the design basis and satisfy GDC 26 and PDC 27
  - Acceptability of design basis is demonstrated in DCA Chapter 15 analyses

Copyright 2019 by NuScale Power, LLC.

4.4 - Thermal and Hydraulic Design

Parameter	Basis	Limit / Protection
Critical heat flux	95/95 criteria that hot rod avoids boiling transition	SL 2.1.1.1
Fuel temperature	Fuel centerline temperature remains below melting limit	SL 2.1.1.2
Reactor core coolant flow	Primary system flow remains within ranges assumed in the safety analysis	TS 3.4.1
Hydrodynamic stability	Normal operation and AOOs do not lead to instability	Module protection system analytical limits prevent loss of subcooling and instability

Acceptance criteria ensure GDC 10 and 12 compliance

Copyright 2019 by NuScale Power, LLC.

4.4 - NuScale Design Fuel and Core Conditions

Parameter	NuScale Design
Avg. Fuel Rod Linear Heat Generation Rate	2.5 kW/ft
Peak Fuel Temperature (cycle beginning)	1620 ºF
Core Inlet Mass Flux	0.4 Mlb/hr-ft^2
Core Inlet Subcooling	135 ºF
Core Exit Subcooling	25 ºF
Core Exit Void Fraction	0.0
Hot Channel Exit Thermodynamic Quality	0.05

Nominal core average exit conditions similar to traditional PWRs

Copyright 2019 by NuScale Power, LLC.

4.4 - Evaluation Methods & Implementation

- **CHF and fuel temperature**
  - Methodology topical reports:

TR-0915-17564-P-A *Subchannel Analysis Methodology*	TR-0116-21012-P-A *NuScale Power Critical Heat Flux Correlations*	TR-0716-50350 **[***in review***]** *Rod Ejection Accident Methodology*

  - VIPRE-01 used to calculate reactor core flow and enthalpy distribution
    - Assess thermal margin to CHF for normal operations and most DBEs to support FSAR Chapter 15
  - Peak linear heat rate using maximum local peaking to assess power margin to fuel melt
  - RCS flow driven by density gradient and system flow resistances
  - Application: FSAR Chapter 15 except 15.6, 15.9
- **Hydrodynamic stability**

Methodology	Software	Implementation
TR-0516-49417 ***[****in review****]***	PIM	15.9

Copyright 2019 by NuScale Power, LLC.

4.4 - CHF Limit and Margin 'Stack-up'

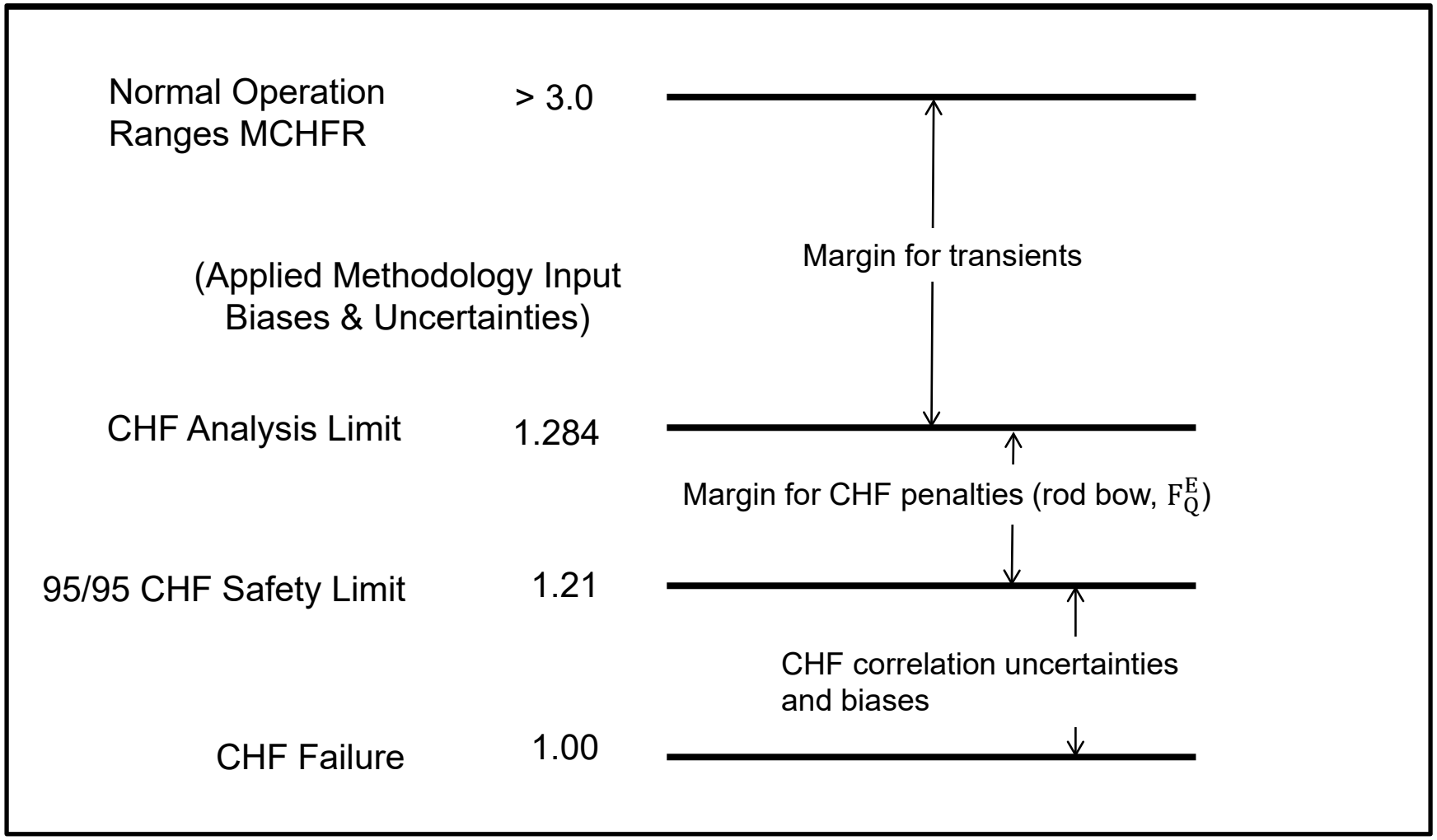

Robust treatment of analytical and design uncertainties

Copyright 2019 by NuScale Power, LLC.

4.4 - Pressure vs. Temperature Operation Map

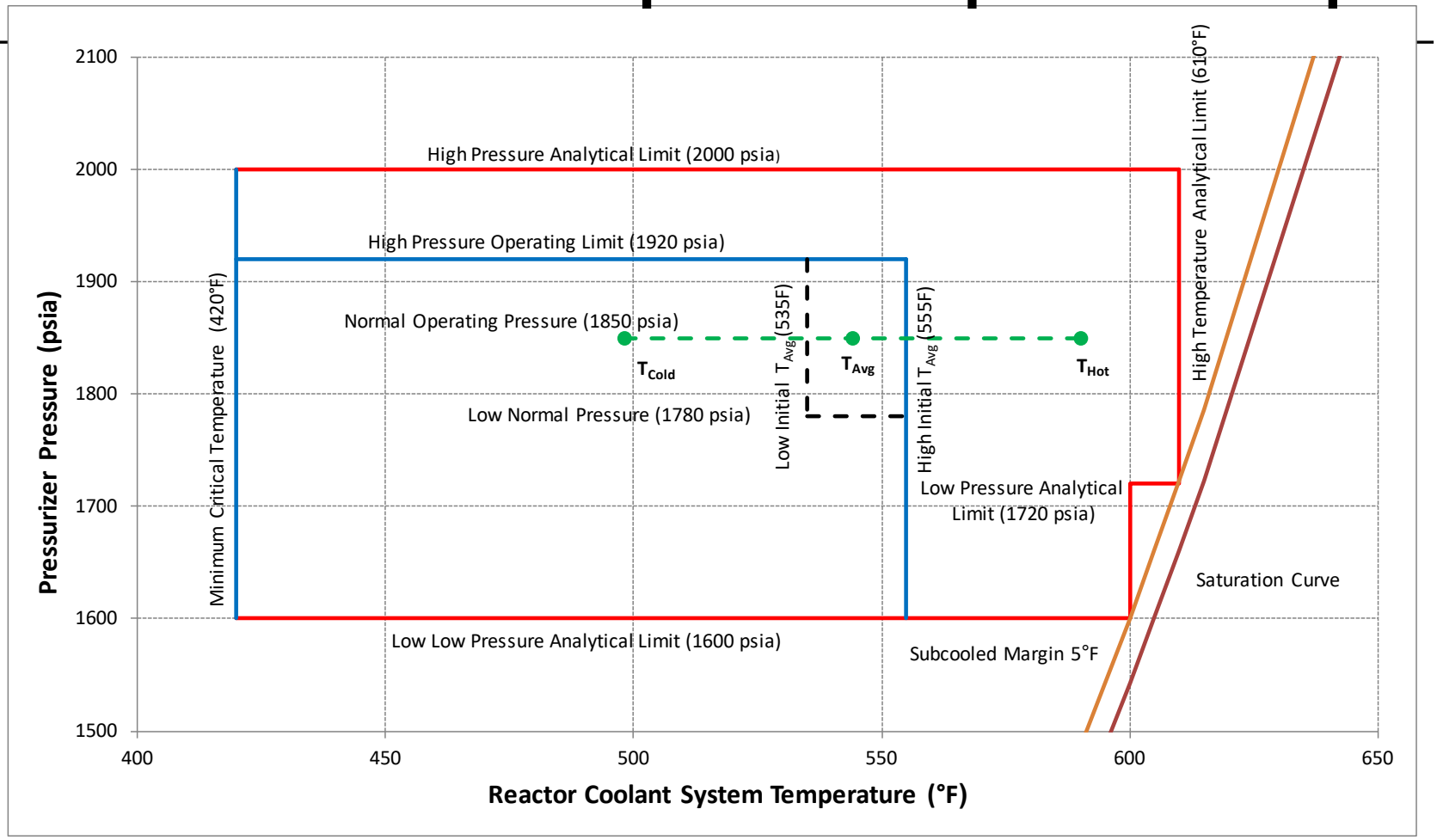

- Module protection system (Ch. 7, red)
- Technical specification LCOs (Ch. 16, blue)

CHF and fuel melting SAFDLs precluded for normal operation & DBEs

Copyright 2019 by NuScale Power, LLC.

4.5.1 – Control Rod Drive System Materials

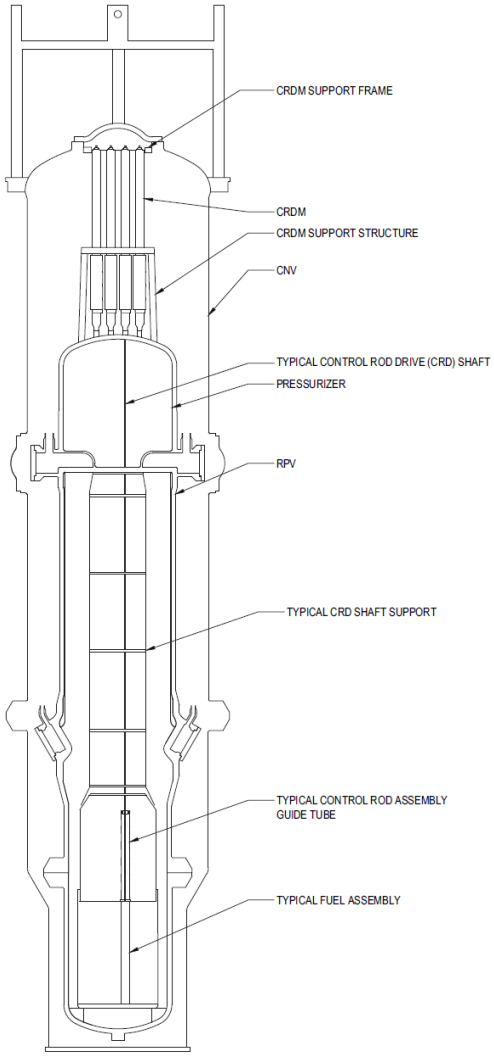

- All pressure boundary materials are designed in accordance with ASME Code
- Pressure boundary materials
  - Austenitic stainless steel materials as addressed in Tier 2, Section 5.2.3 and RG 1.44 Revision 1, with corresponding weld materials
- Non-pressure boundary materials
  - Austenitic & martensitic stainless steels, nickel-base materials
  - Cobalt-based materials are used in a very small portion where alternate material will not perform satisfactorily.

Components and materials are consistent with those for existing, proven designs

Copyright 2019 by NuScale Power, LLC.

4.5.2 – Reactor Internals and Core Support Structure Materials

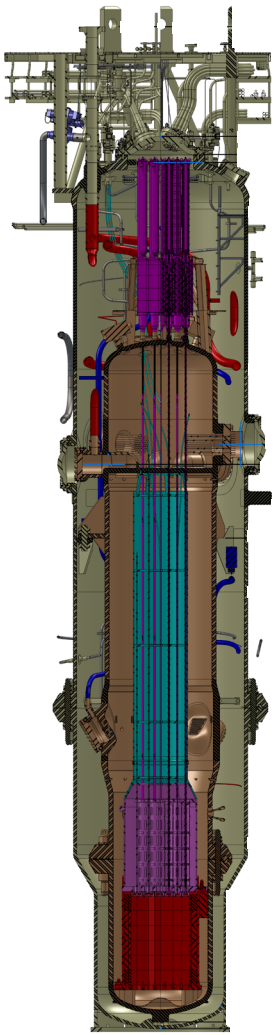

- Materials are selected based on compatibility with their environment
- Components are considered for peak neutron fluence and evaluated using Electric Power Research Institute (EPRI) materials reliability program criteria
- Parts exposed to reactor coolant are made of corrosion resistant material
  - Made mostly of austenitic stainless steel, some nickel-base materials and limited cobalt base materials

Components and materials are consistent with those for existing, proven designs

Copyright 2019 by NuScale Power, LLC.

4.6.1 Description of the Control Rod Drive System

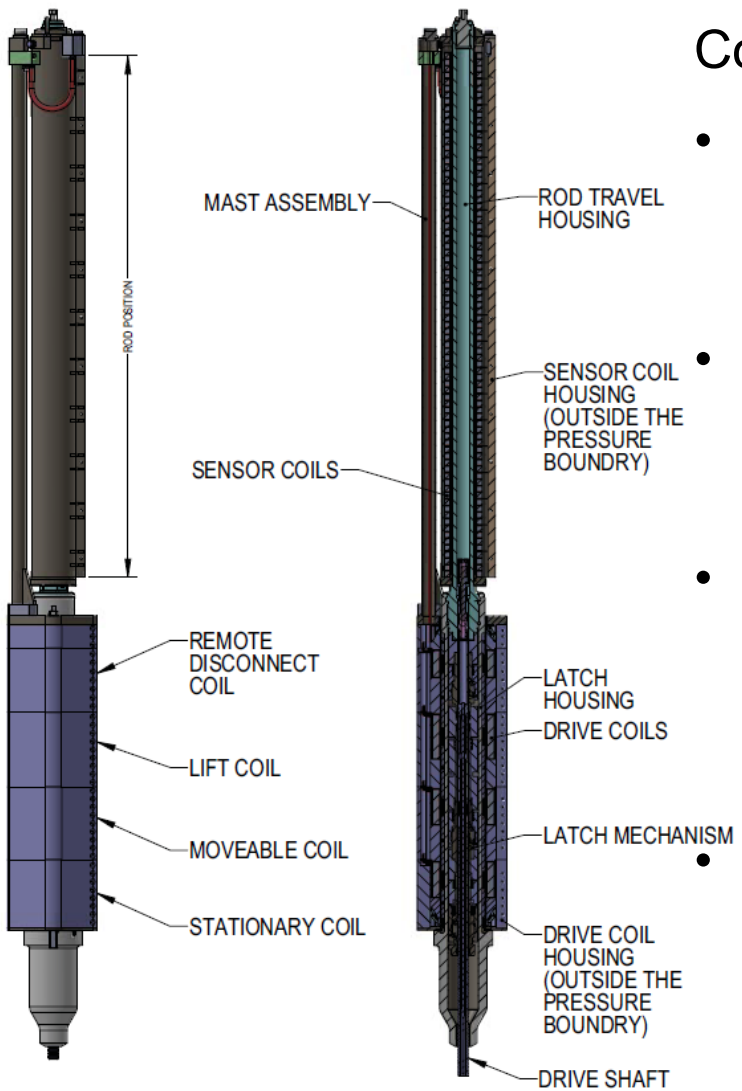

Control Rod Drive Mechanisms (CRDM)

- Components and materials are consistent with those for existing PWR magnetic jack CRDM design.
- Additional remote disconnect mechanism (RDM) coil and latch are provided on top of the typical configuration of three coils.
- Components external to primary pressure boundary are designed for operation in an evacuated containment, but not required to operate during ECCS blowdown.
- Components internal to primary pressure boundary (drive shaft & latch mechanism) are exposed to steam & non-condensable gases (N_2, H_2) on top of the pressurizer.

Copyright 2019 by NuScale Power, LLC.

4.6.1 Description of the Control Rod Drive System

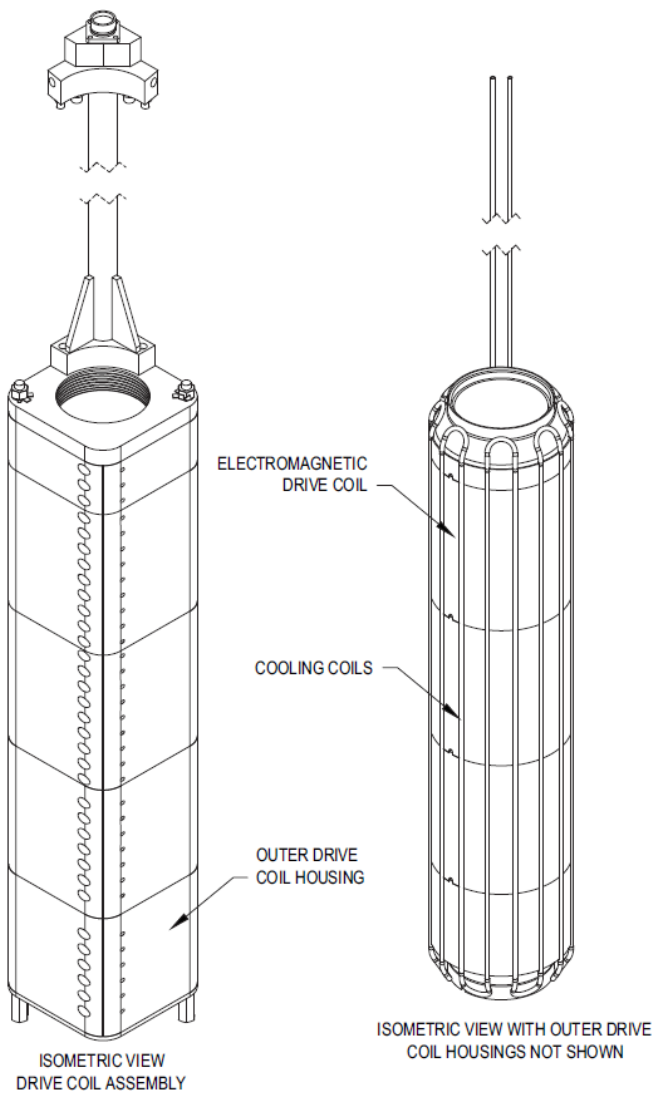

- Components external to primary pressure boundary are non-safety related (B2) and support SCRAM function by de-energizing from RTB.
- The CRDM electrical coils are exposed to a high-temperature vacuum, and require a cooling water system. The cooling coils envelope the electrical coils and are protected against impact by an outer coil housing and mast assembly (pipe).
- Disassembly of electrical components from the pressure boundary by upward retraction (slip-fit) after disconnection of cables and cooling water hoses.

Copyright 2019 by NuScale Power, LLC.

4.6.1 Description of the Control Rod Drive System

- Initially, the Disconnect Rod is withdrawn and shaft fingers are in the retracted position allowing insertion of the shaft fingers into CRA Hub
- Once shaft fingers are inserted in the CRA hub, the Disconnect Rod is released and forces shaft fingers to expand outward and engage CRA Hub for normal operation
- To release, the Disconnect Rod is withdrawn allowing the shaft fingers to return to the retracted position
- The drive shaft can now be withdrawn and separated from the CRA

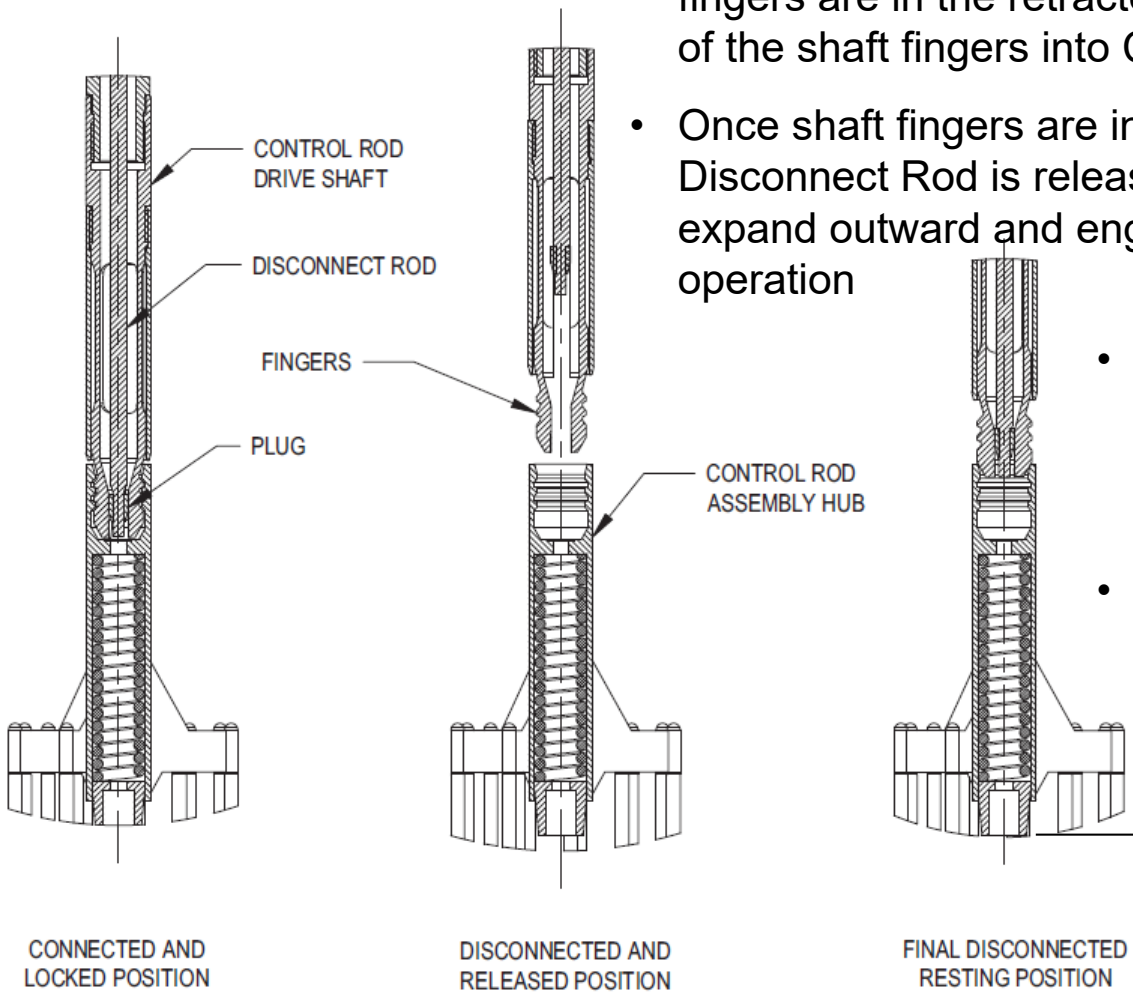

Copyright 2019 by NuScale Power, LLC.

Chapter 4 – COL Items

COL Item 4.2-1

- A COL applicant that references the NuScale Power Plant design certification and wishes to utilize non-baseload operations will provide justification for the fuel performance codes and methods corresponding to the desired operation.

Copyright 2019 by NuScale Power, LLC.

Acronyms

- AO – Axial Offset
- AOO – Anticipated Operational Occurrences
- ASME – American Society of Mechanical Engineers
- BOL – Beginning of Life
- CHF – Critical Heat Flux
- COL – Combined License
- CRA – Control Rod Assembly
- CRDM – Control Rod Drive Mechanism
- DBE – Design Basis Event
- DCA – Design Certification Application
- ECCS – Emergency Core Cooling System
- EOL – End of Life
- EPRI – Electric Power Research Institute
- FIV – Flow Induced Vibration
- FSAR – Final Safety Analysis Report
- H/D – Height over Diameter
- HMP – High Mechanical Performance (Spacer Grid)
- HTP – High Thermal Performance (Spacer Grid)
- LOCA – Loss of Coolant Accident
- LTSD – Long Term Shutdown

Copyright 2019 by NuScale Power, LLC.

Acronyms

- MCHFR – Minimum Critical Heat Flux Ratio
- MPS - Module Protection System
- PDIL - Power Dependant Insertion Limit
- PWR – Pressurized Water Reactor
- RCS - Reactor Coolant System
- RG - Regulatory Guide
- RTB - Reactor Trip Breaker
- SAFDL - Specified Acceptable Fuel Design Limit
- SDM - Shutdown Margin
- SRP - Standard Review Plan
- TS – Technical Specifications

Copyright 2019 by NuScale Power, LLC.

Portland Office
6650 SW Redwood Lane,
Suite 210
Portland, OR 97224
971.371.1592

Corvallis Office
1100 NE Circle Blvd., Suite 200
Corvallis, OR 97330
541.360.0500

Rockville Office
11333 Woodglen Ave., Suite 205
Rockville, MD 20852
301.770.0472

Charlotte Office
2815 Coliseum Centre Drive,
Suite 230
Charlotte, NC 28217
980.349.4804

Richland Office
1933 Jadwin Ave., Suite 130
Richland, WA 99354
541.360.0500

Arlington Office
2300 Clarendon Blvd., Suite 1110
Arlington, VA 22201

London Office
1st Floor Portland House
Bressenden Place
London SW1E 5BH
United Kingdom
+44 (0) 2079 321700

http://www.nuscalepower.com
Twitter: @NuScale_Power

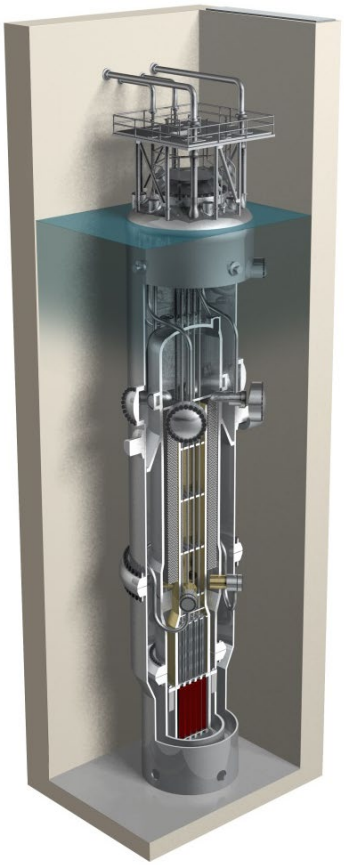

NUSCALE™
Power for all humankind

Copyright 2019 by NuScale Power, LLC.

U.S.NRC

United States Nuclear Regulatory Commission

Protecting People and the Environment

Safety Evaluation with Open Items: Chapter 4, "Reactor"

NuScale Design Certification Application

ACRS Subcommittee Meeting
April 17, 2019

Agenda

- NRC Staff Review Team
- Summary of the NRC Staff's Review
- Section 4.2
- Sections 4.3, 4.4
- Section 4.5.1
- Section 4.5.2
- Section 4.6

NRC Staff Review Team

- Technical Reviewers:
  - Chris Van Wert, NRO/SRSB
  - Kenneth Geelhood, PNNL
  - Tim Drzewiecki, NRO/SRSB
  - John Honcharik, NRO/MCB
  - Dan Widrevitz, NRO/MCB
  - Ryan Nolan, NRO/SRSB

- Project Management:
  - Bruce Bavol, Project Manager NRO/DLSE

Summary of the Staff's Review

- NRC Staff's safety evaluation report (SER) is based on DCA, Rev. 1,
- During the review, the NRC staff issued 16 RAIs,
- SER contains 14 open items and one confirmatory item,
- NuScale has incorporated information in Rev. 2 to the DCA to address staff's confirmatory items,
- One requested Exemption (Section 4.2) - Fuel Rod Cladding Material,
- ACRS Full-Committee briefing scheduled on May 2, 2019.

Staff's Evaluation of Sections:

4.2	Fuel System Design
4.3	Nuclear Design
4.4	Thermal-Hydraulic Design
4.5.1	Control Rod Drive Structural Materials
4.5.2	Reactor Internal Core and Support Structure Materials
4.6	Functional Design of Control Rod Drive System

4.2 Fuel System Design

Areas of Review

- Design Bases
  - Fuel assembly damage
  - Fuel rod damage
  - Core coolability
- Descriptions and Design Drawings
- Design Evaluation
- Testing, Inspection, and Surveillance Plans
- Exemption (Section 4.2) - Fuel Rod Cladding Material
- ITAACs
- COL Action Items and Certification Restrictions

4.2 Fuel System Design

Fuel System Design Characteristics

- Based on the AREVA HTP fuel assembly design
  - Shorter assembly length
  - Fewer grids but similar (slightly smaller) grid span
- NuScale operational parameters are mostly similar to operational experience, but differences include:
  - Lower system pressure
  - Lower flow rates
  - Lower temperatures

4.2 Fuel System Design

Staff Review and Findings

- Staff finds that the applicant meets the SAFDLs associated with the normal operation and anticipated operational occurrences (AOOs) presented in TR-0816-51127 Revision 1

- Staff unable to make finding regarding GDC 2 at this time, pending closure of **Open Item 4.2-1**
- Staff unable to make finding regarding GDC 27, pending closure of **Open Items 4.2-2 and 4.2-3**
- Staff unable to make finding regarding GDC 35, pending closure of **Open Items 8.3-1 and 4.2-4**

4.2 Fuel System Design

Open Item 4.2-1 (Fuel Seismic)

NuScale is revising the fuel assembly seismic structural response for both the Refueling Flange Tool (RFT) and operating bay locations. Analyses are scheduled to be submitted on the docket July 31, 2019.

4.2 Fuel System Design

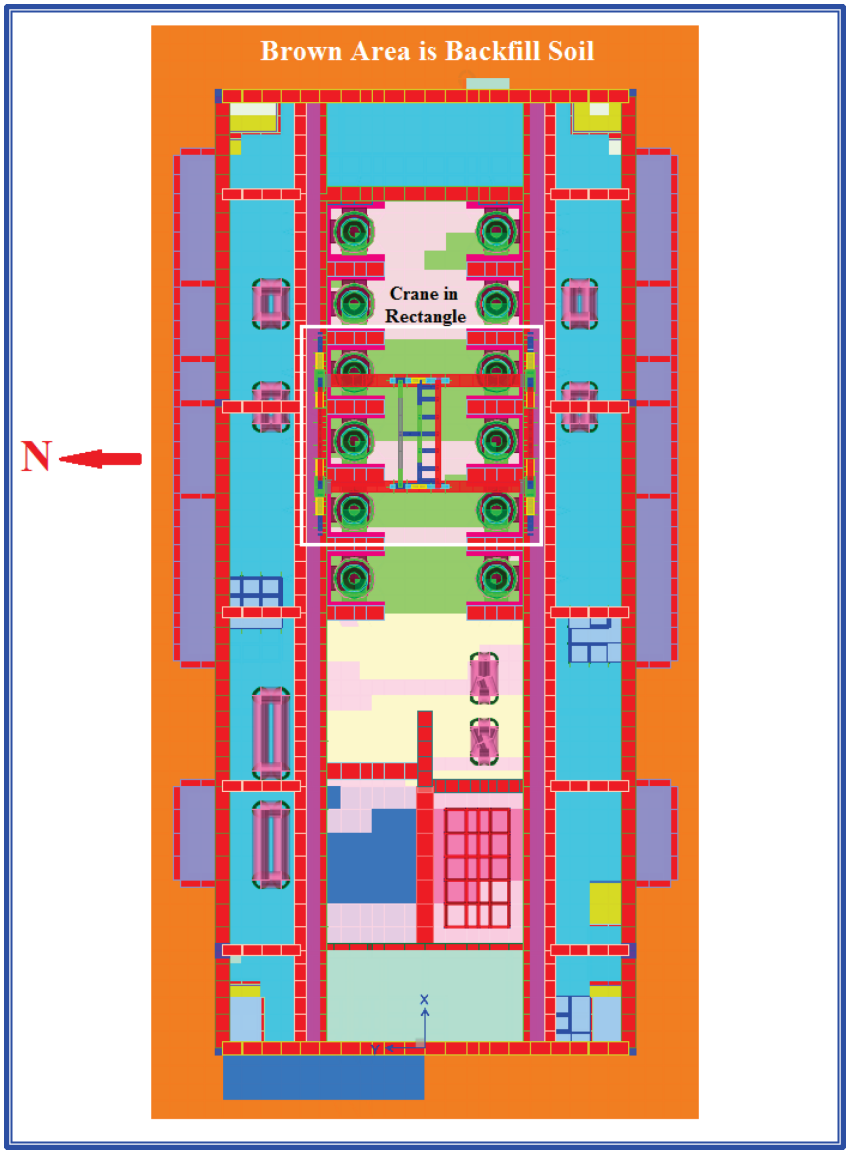

4.2 Fuel System Design

Interdependent Open Items

Open Items 4.2-2 and 4.2-3 (GDC27)
NuScale requested an exemption to GDC 27 in its application and has proposed PDC 27. The staff's evaluation of PDC 27 is addressed in Chapter 15.

Open Item 8.3-1 (GDC 35)
NuScale requested an exemption from GDC 17 in its application regarding class 1E power and proposed PDC 17. As part of this exemption, the power requirements portion of various other GDCs (including GDC 35) are impacted. The evaluation of PDC 17 (and PDC 35) is ongoing.

Open Item 4.2-4 (GDC 35)
In addition to the staff's evaluation of PDC 17 and PDC 35 as discussed in Open Item 8.3-1, the staff's technical review regarding PDC 35 is ongoing and will be presented in the staff's SER for Chapter 15.

4.2 Fuel System Design

Exemption request - 10 CFR 50.46 regarding the use of zircaloy

NuScale requested an exemption from the requirement of 10 CFR 50.46 regarding the use of zircaloy or ZIRLO as a fuel rod cladding material. The staff reviewed the applicant's request and approved the exemption from the requirements of 10 CFR 50.46 and 10 CFR Part 50, Appendix K, to permit NuScale's use of the M5TM alloy fuel rod cladding in its fuel design.

4.3 Nuclear Design Regulatory Basis

- GDC 10, *Reactor Design*
- GDC 11, *Reactor Inherent Protection*
- **GDC 12, *Suppression of reactor power oscillations***
- GDC 13, *Instrumentation and control*
- GDC 25, *Protection system requirements for reactivity control malfunctions*
- GDC 26, *Reactivity control system redundancy and capability*
- **GDC 27, *Combined reactivity control systems capability***
- **GDC 28, *Reactivity limits***

4.3 Nuclear Design Methodologies

- Information supporting NRC staff findings was based on following methodologies:
  - TR-0616-49783, “Nuclear Analysis Codes and Methods Qualification” (Approved)
  - TR-0915-17564, “Subchannel Analysis Methodology” (Approved)
  - TR-0716-50350, “Rod Ejection Accident Methodology” (Under Review)
  - TR-0116-20781, “Fluence Calculation Methodology for Determining Pressure Vessel Fluence” (Incorporated by Reference into DCA)
  - Application of methods described throughout DCA, Part 2, Tier 2, Section 4.3 (e.g., AO, PDILs, UHS boron concentration)

4.3 Nuclear Design Reactivity Control

- Shutdown Margin (SDM) and Long Term Shutdown Capability (LTSD):
  - SDM defined as the instantaneous amount of reactivity by which the reactor is subcritical or would be subcritical from its present condition assuming:
    - Moderator is 420 °F
    - All CRAs are fully inserted except for the single assembly of highest reactivity worth, which is assumed to be fully withdrawn
  - LTSD defined as the amount of reactivity by which the reactor is subcritical or would be subcritical from its present condition assuming:
    - All CRAs are fully inserted
    - RCS is cooled to equilibrium conditions (core is xenon-free, no decay heat or voiding, equilibrium samarium)

4.3 Nuclear Design Reactivity Control

SDM

1	CRA Worth	BOC	MOC	EOC
a	Total Available CRA Worth, pcm	14414	14800	15553
b	PDIL Worth, pcm	381	502	663
c	WRSO Worth, pcm	4766	4922	5249
d	Uncertainty Factor	0.12	0.12	0.12
e	Subtotal, pcm (a-b-c)(1-d)	8154	8250	8484
2	Power			
a	Defect, pcm	1637	2595	3740
b	Axial Redistribution, pcm	391	180	7
c	Subtotal, pcm (a+b)	2028	2775	3747
3	Worth Balance			
a	Required SDM, pcm	2041	2041	2041
b	Gross Margin, pcm (1e-2c)	6126	5475	4737
c	Net Margin to SDM, pcm (b-a)	4085	3434	2696

LTSD

1	CRA Worth	BOC	MOC	EOC
a	Total Available CRA Worth, pcm	14414	14800	15553
b	PDIL Worth, pcm	381	502	663
d	Uncertainty Factor	0.12	0.12	0.12
e	Subtotal, pcm (a-b)(1-d)	12349	12582	13103
2	Reactivity Insertion			
a	Defect, pcm	1637	2595	3740
b	Axial Redistribution, pcm	391	180	7
c	Moderator Cooling, pcm	3019	4293	5886
d	Xenon Worth, pcm	2203	2381	2515
e	Subtotal, pcm (a+b+c+d)	7250	9449	12148
3	Worth Balance			
a	Net Margin to Critical, pcm (1d-2e)	5099	3133	955

4.3 Nuclear Design Reactivity Control

- GDC 26, *Reactivity control system redundancy and capability*
  - NPM provides for two independent reactivity control systems of different design principles in the control rod assemblies (CRAs) and the chemical and volume control system (CVCS)
  - The CRAs are capable of reliably controlling reactivity changes under conditions of normal operation, including anticipated operational occurrences (AOOs), and with appropriate margin for stuck rods, such that SAFDLs are not exceeded
    - Shutdown margin (SDM) (combined with rapid CRA insertion) protects specified acceptable fuel design limits (SAFDLs) (integrated system response is evaluated in Chapter 15)

4.3 Nuclear Design Reactivity Control

- GDC 26
  - CVCS is capable of reliably controlling the rate of reactivity changes resulting from planned, normal power changes (including xenon burnout) to assure acceptable fuel design limits are not exceeded
    - CVCS is used to maintained CRAs within power dependent insertion limits (PDILs), which preserves SDM
    - Maximum reactivity addition rate is controlled such that SAFDLs are not violated (integrated system evaluation in SER Section 15.4)
  - CVCS and CRAs are each capable of holding the reactor subcritical under cold conditions
    - Definition LTSD ensure ability of CRAs to hold reactor subcritical under cold conditions
    - CVCS is capable of providing highly concentrated boron sufficient to ensure subcriticality under cold conditions

4.3 Nuclear Design Open Items

- GDC 12, *Suppression of reactor power oscillations*
  - Xenon stability analysis shows that nuclear design for NPM is inherently stable with respect to axial and radial power stability
  - TR-0516-49417, "Evaluation Methodology for Stability Analysis of the NuScale Power Module," (under review) **Open Item 4.4-10**
- GDC 27, *Combined reactivity control systems capability*
  - Exemption evaluation in Section 15.0.6 of SER (ongoing) **Open Item 4.3-05**
  - SECY-18-099, "NuScale Exemption Request from 10 CFR Part 50, Appendix A, General Design Criterion 27, 'Combined Reactivity Control Systems Capability'"
  - NRC staff questioned the evaluation of thermal margin (RAI 8771, Question 15-1) and probability of occurrence (RAI 9505, Question 15-18). **Open Item 4.3-02 and 4.3-03**, respectively
  - NRC staff questioned the distribution of soluble boron during long term cooling (RAI 8930, Question 15-27). **Open Item 4.3-04**

4.3 Nuclear Design Open Items

- GDC 28, *Reactivity Limits*
  - TR-0716-50350, “Rod Ejection Accident Methodology,” (under review) **Open Item 4.3-06**
  - NRC staff questioned the distribution of soluble boron during long term cooling (RAI 8930, Question 15-27). **Open Item 4.3-04**

4.4 Thermal-Hydraulic Design Regulatory Basis

- **GDC 10, *Reactor Design***
- **GDC 12, *Suppression of reactor power oscillations***
- 10 CFR 50.34(f)(2)(xviii) – instrumentation provided in control room for unambiguous indication of inadequate core cooling

4.4 Thermal-Hydraulic Design Methodologies

- TR-0116-21012, “NuScale Power Critical Heat Flux Correlations” (Approved)
- TR-0915-17564, “Subchannel Analysis Methodology” (Approved)
- TR-0516-49416, “Non-Loss-of-Coolant Analysis Methodology” (Under Review)
- TR-0516-49417, “Evaluation Methodology for Stability Analysis of the NuScale Power Module” (Under Review)

4.4 Thermal-Hydraulic Design Unique NPM Features

- No thermal margin trip (e.g., Overtemperature DT, or DNBR trip)
  - Adequate thermal margin demonstrated through Chapter 15 transient and accident analysis
- No GTS LCO for heat flux hot channel factor (F_Q)
  - Not used as an initial condition for any transient or design basis accident (i.e., 10 CFR 50.36(c)(2)(ii)(B) *Criterion 2*)
  - Analysis methodologies use conservative axial and radial flux shapes
- RCS flow continuously monitored using four sets of ultrasonic transducers
  - Calibrated against heat balance (SR 3.3.1.2)

4.4 Thermal-Hydraulic Design Open Items

- GDC 10, *Reactor Design*
  - Design basis bypass flowrate verified by CFD. NRC issued RAI 9645, Question 4.4-06 seeking further justification for bypass flowrate **Open Item 4.4-07**
  - TR-0516-49416, “Non-Loss-of-Coolant Analysis Methodology” (Under Review) **Open Item 4.4-08**
  - NRC staff issued RAI 9643, Question 4.4-09 to address the potential for axial flux shape and secondary side perturbations to impact RCS flow **Open Item 4.4-09**

4.4 Thermal-Hydraulic Design Open Items

- GDC 12, *Suppression of reactor power oscillations*
  - DCA Part 2, Tier 2, Section 4.4.3.1 states that flow stability protection uses a regional exclusion solution described in TR-0516-49417, “Evaluation Methodology for Stability Analysis of the NuScale Power Module”
  - TR-0516-49417 is currently under review (**Open Item 4.4-10**)

4.5.1 Control Rod Drive Structural Materials

Regulatory Basis

- 10 CFR Part 50, Appendix A, GDC 1, “Quality Standards and Records,” requires that SSCs important to safety shall be designed, fabricated, erected, and tested to quality standards commensurate with the importance of the safety functions to be performed.

- 10 CFR Part 50, Appendix A, GDC 14, “Reactor Coolant Pressure Boundary,” requires that the reactor coolant pressure boundary (RCPB) be designed, fabricated, erected, and tested so as to have an extremely low probability of abnormal leakage, of rapidly propagating failure, and of gross rupture.

- 10 CFR Part 50, Appendix A, GDC 26, , “Reactivity Control System Redundancy and Capability,” requires, in part, that one reactivity control system use control rods and that this system be capable of reliably controlling reactivity changes.

- 10 CFR 50.55a, “Codes and Standards,” incorporates by reference the applicable editions and addenda of the ASME Code

4.5.1 Control Rod Drive Structural Materials

Review Guidance

- NUREG-0800, Section 4.5.1, “Control Rod Drive Structural Materials,” Revision 3, dated March 2007
- RG 1.31, “Control of Ferrite Content in Stainless Steel Weld Metal,” Revision 4, dated October 2013
- RG 1.44, “Control of the Use of Sensitized Stainless Steel,” Revision 1, dated March 2011
- ASME NQA 1, 2008 Edition with 2009 Addenda
- ASME Code, Section III

4.5.1 Control Rod Drive Structural Materials

Staff's Review of DCA, Section 4.5.1

- The staff reviewed the materials for the CRD system performing both reactor coolant pressure boundary and non-pressure boundary functions.
- Pressure boundary CRD components are constructed to Section III of the ASME Code and Quality Group A.
- CRD heat exchangers and associated components are constructed to Section III of the ASME Code and Quality Group B.

4.5.1 Control Rod Drive Structural Materials

Staff's Review of DCA, Section 4.5.1

- Non-pressure boundary CRD components are fabricated from materials that will assure that they function reliably to meet the requirements of GDC 26.
- The design and fabrication meets the guidance of RG 1.31, RG 1.44, and the ASME Code and the selected materials minimize the impact of degradation such as stress corrosion cracking.

4.5.1 Control Rod Drive Structural Materials

Staff's Review of DCA, Section 4.5.1

- There are no open or confirmatory items for Section 4.5.1.
- The staff's review determined the CRD materials for the design meets the applicable regulatory requirements.

4.5.2 Reactor Internal Core and Support Structure Materials

Section covers internals. NuScale design simpler and otherwise highly consistent with precedent both in materials and fabrication considerations.

Familiar aspects:

- Overall design, neutron flux, materials
- Compliance with ASME and citation of relevant RGs

Unique aspects:

- Simpler design
- Use of Materials Reliability Program (MRP)-227 criteria to analyze for degradation mechanisms (resulting in some Visual Testing (VT) 1 and VT3 examinations)

4.6- Functional Design of Reactivity Control Systems

Area of Review

- Control rod drive system (CRDS) functionality and arrangement
- Environmental and seismic qualification of CRDS
- Design requirements for CRDS cooling system
- Possible single failures of the CRDS
- Testing and verification of the CRDS
- Common mode failures
- Technical specifications for CRDS

4.6- Functional Design of Reactivity Control Systems

Conclusions

- Meets GDC 4, 23, 25, 26, and 29 because:
  - Reasonable assurance that the CRDS will remain functional and can provide safe shutdown capability under adverse environmental conditions and after postulated accidents
  - CRDS fails in a safe condition
  - No single malfunction in the CRDS will result in exceeding SAFDLs
  - Extreme high probability of CRDS accomplishing safety function during AOOs
  - CRDS cooling system meets design requirements

Open Items

- **Open Item 4.3-03**: related to staff's evaluation of exemption request to GDC 27
- **Open Item 4.3-04**: related to the staff's review of the potential for redistribution of soluble boron during long term cooling.

Questions/comments from members of the public before the closed session starts?

Non-Proprietary

April 11, 2019 Docket No. 52-048

U.S. Nuclear Regulatory Commission
ATTN: Document Control Desk
One White Flint North
11555 Rockville Pike
Rockville, MD 20852-2738

SUBJECT: NuScale Power, LLC Submittal of Presentation Materials Entitled "ACRS Presentation: NuScale Chapter 5, Reactor Coolant System and Connecting Systems Overview," PM-0419-65159, Revision 0

The purpose of this submittal is to provide presentation materials for use during the upcoming Advisory Committee on Reactor Safeguards (ACRS) NuScale Subcommittee meeting on April 17, 2019. The materials support NuScale's presentation of Chapter 5, "Reactor Coolant System and Connecting Systems," of the NuScale Design Certification Application.

Enclosure 1 is the nonproprietary presentation entitled "ACRS Presentation: NuScale Chapter 5, Reactor Coolant System and Connecting Systems Overview," PM-0419-65159, Revision 0.

This letter makes no regulatory commitments and no revisions to any existing regulatory commitments.

If you have any questions, please contact Rebecca Norris at 541-452-7539 or at rnorris@nuscalepower.com.

Sincerely,

Zackary W. Rad
Director, Regulatory Affairs
NuScale Power, LLC

Distribution: Robert Taylor, NRC, OWFN-7H4
Michael Snodderly, NRC, TWFN-2E26
Gregory Cranston, NRC, OWFN-8H12
Samuel Lee, NRC, OWFN-8H12
Bruce Bavol, NRC, OWFN-8H12

Enclosure 1: "ACRS Presentation: NuScale Chapter 5, Reactor Coolant System and Connecting Systems Overview," PM-0419-65159, Revision 0

Enclosure 1:

"ACRS Presentation: NuScale Chapter 5, Reactor Coolant System and Connecting Systems Overview," PM-0419-65159, Revision 0

ACRS Presentation: NuScale Chapter 5, Reactor Coolant System and Connecting Systems Overview

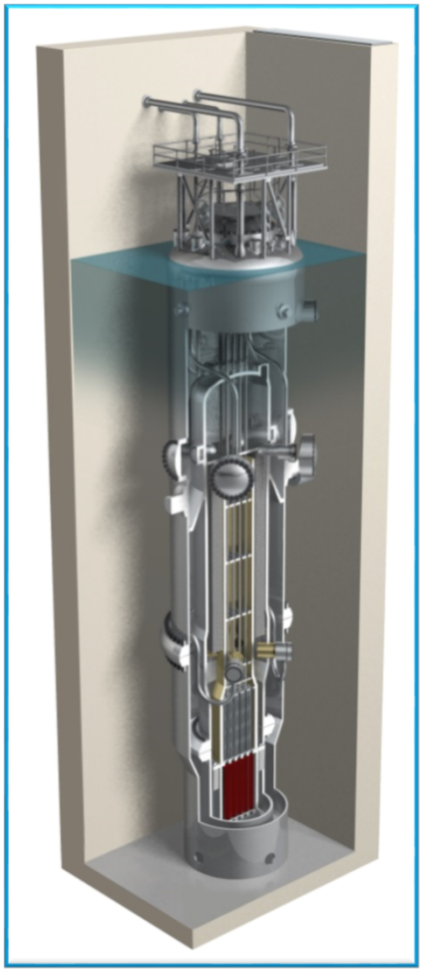

PM-0419-65159
Revision: 0

Copyright 2018 by NuScale Power, LLC.

Template #: 0000-21727-F01 R4

Presentation Team

Derek Noel

Supervisor, NSSS Component Design

Colin Sexton

Chemical Engineer

Hongqing Xu

Materials Engineer

Carrie Fosaaen

Supervisor, Licensing

Zackary Rad

Director, Regulatory Affairs

Copyright 2018 by NuScale Power, LLC.

Chapter 5: Reactor Coolant System and Connecting Systems

Section	Title
5.1	Summary Description
5.2	Integrity of Reactor Coolant Boundary
5.3	Reactor Vessel
5.4	Reactor Coolant System Component and Subsystem Design

Copyright 2018 by NuScale Power, LLC.

5.1 – Summary Description

Overview of RCS Components

- Reactor Pressure Vessel
- Integral Pressurizer
- Reactor Vessel Internals
- Reactor Safety Valves
- RCS piping inside the containment vessel

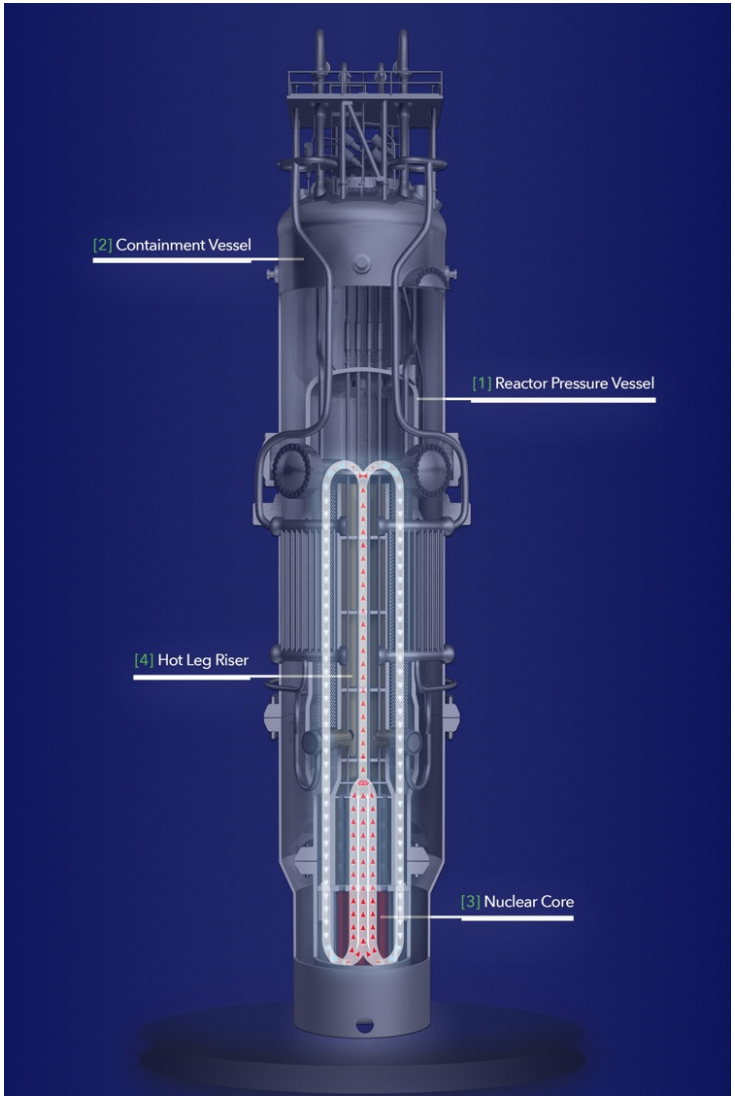

Copyright 2019 by NuScale Power, LLC.

5.1 – Summary Description

RPV Parameters

Parameter	Value
Design thermal Power, MWt	160
Design Pressure, psia	2100
Design Temperature, ^{o}F	650
Overall Height (ft)	64.83
Inside diameter (excluding clad) (ft)	8.04 – 8.88

RCS Volumes

RCS Region	Nominal Volume (ft^3)
Hot Leg	635
Cold Leg	578
Core Region	89
SG Region	621
PZR Region	578

Copyright 2019 by NuScale Power, LLC.

5.1 – Summary Description

RCS temperature and flow data

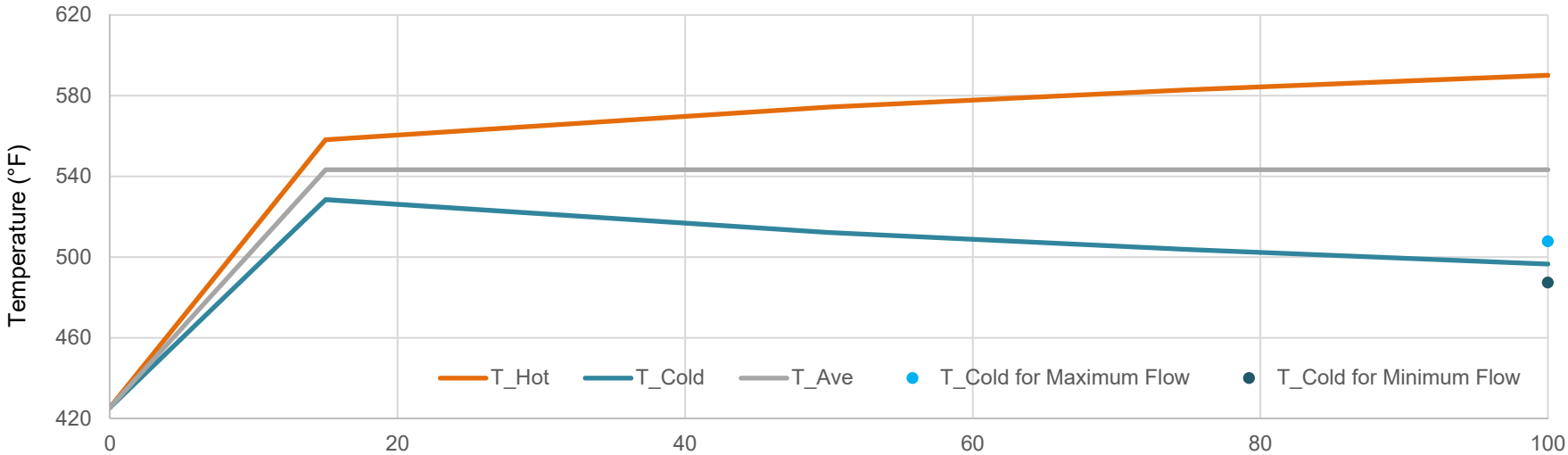

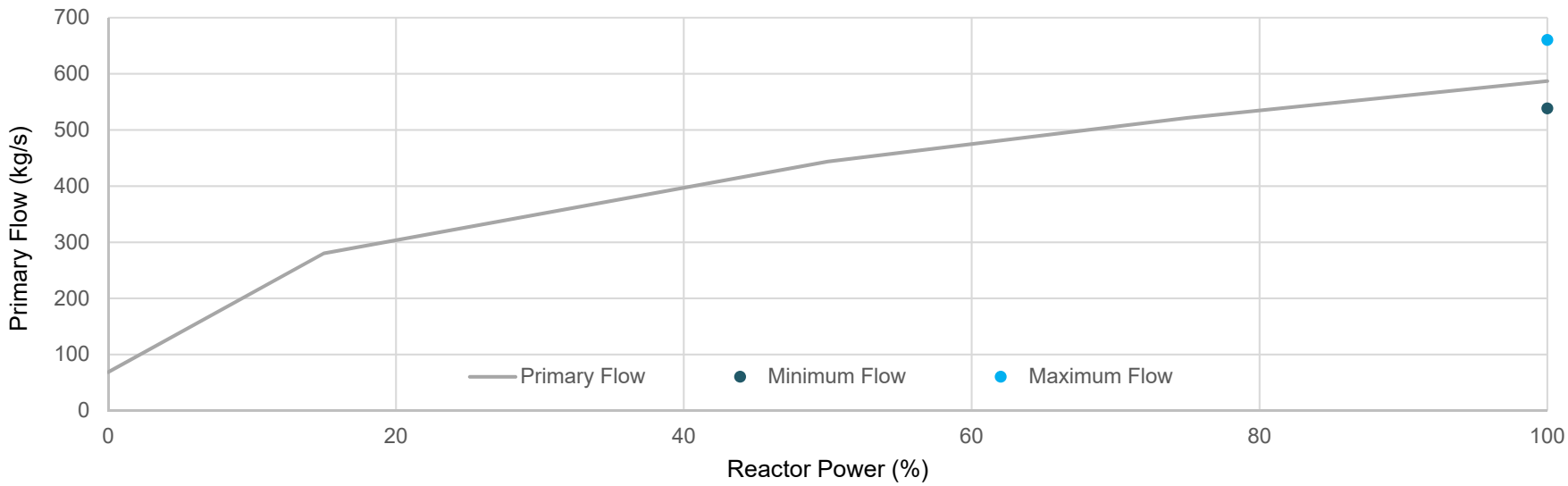

Copyright 2019 by NuScale Power, LLC.

5.2 – Integrity of Reactor Coolant Boundary

Section	Title
5.2.1	Compliance with Codes and Code Cases
5.2.2	Overpressure Protection
5.2.3	Reactor Coolant Pressure Boundary Materials (5.3 – Reactor Vessel also discussed here)
5.2.4	Reactor Coolant Pressure Boundary Inservice Inspection and Testing
5.2.5	Reactor Coolant Pressure Boundary Leakage Detection

Copyright 2019 by NuScale Power, LLC.

5.2 - Integrity of Reactor Coolant Boundary

5.2.1

- Code of Record - ASME BPVC, 2013 Edition with No Addenda

5.2.2

- RCPB Overpressure protection provided by RSVs – primary and secondary sides
- LTOP is provided by RVVs

COL Item:

- 5.2-2: Provide a certified Overpressure Protection Report in compliance with ASME BPVC Section III, Subarticles NB-7200 and NC-7200 to demonstrate the RCPB and secondary system are designed with adequate overpressure protection features, including LTOP features.

Copyright 2019 by NuScale Power, LLC.

5.2.3 – Reactor Coolant Pressure Boundary Materials

Materials selected, including weld materials, conform to fabrication, construction, and testing requirements of ASME BPVC, Section III, Subsection NB requirements

- RCPB Materials include:
  - SA-508 – base metal for RPV shell components
  - Alloy 690 TT – SG tubes & Safe ends
  - Dual certified 304/304L– RCS piping
  - Austenitic SS and Nickel based (Ni-Cr-Fe) – Cladding
  - Alloy 718 – Threaded Fastener material
- Fabrication follows applicable ASME Code and regulatory requirements

Copyright 2019 by NuScale Power, LLC.

5.3.1 – Reactor Vessel Materials

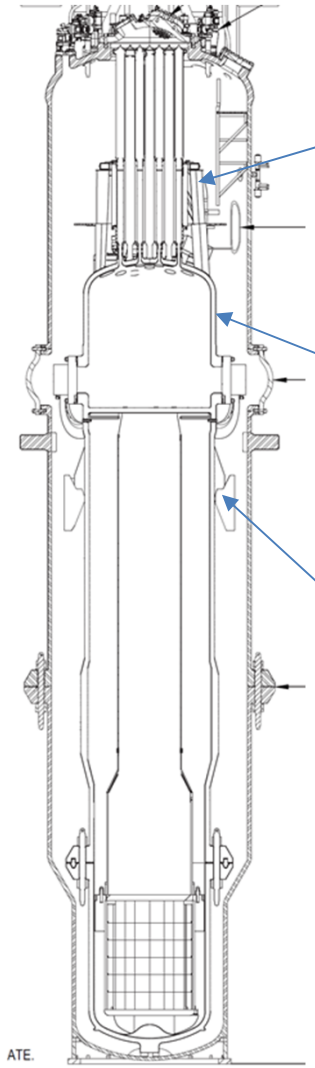

CRDM seismic support structure– fabricated per ASME BPVC Section III, NF

RPV shell is fabricated per requirements of ASME BPVC Section III, NB

RPV supports – fabricated per ASME BPVC Section III, NF

SG tube supports – fabricated per ASME BPVC Section III, NG

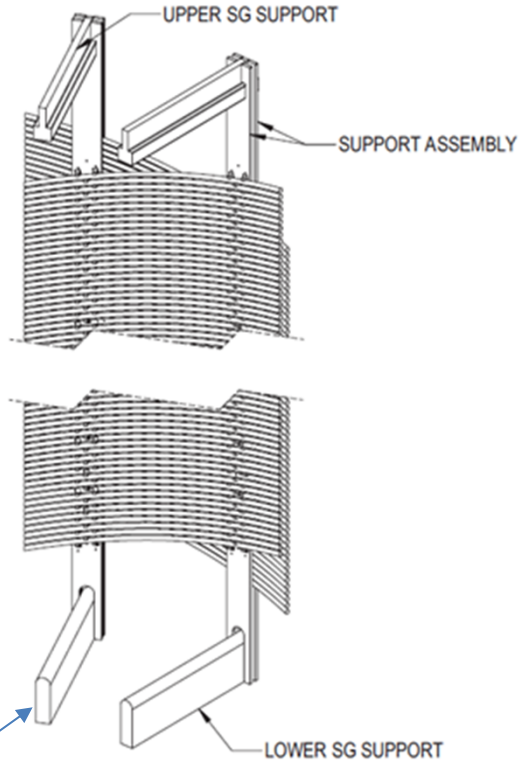

Copyright 2019 by NuScale Power, LLC.

5.3.1 & 5.3.2– RPV Materials & P/T Limits, Pressurized Thermal Shock, and Charpy Upper-Shelf Energy Data and Analyses

- Fracture Toughness requirements, Material Surveillance requirements, Pressurized Thermal Shock screening, and Upper-Shelf Energy comply with regulatory requirements
- Limit Curves Methodology in TR-1015-18177, "Pressure and Temperature Limits Methodology”
- COL Items:
  - 5.3-1: Establish measures to control the onsite cleaning of the RPV during construction in accordance with RG 1.28
  - 5.3-2: Develop operating procedures to ensure that transients will not be more severe than those for which the reactor design adequacy had been demonstrated. These procedures will be based on material properties of the as-built reactor vessels.
  - 5.3-3: Describe the reactor vessel material surveillance program consistent with NUREG 0800, Section 5.3.1

Copyright 2019 by NuScale Power, LLC.

5.2.3 – Reactor Coolant Pressure Boundary Materials

- Reactor Coolant Chemistry parameters and impurity limitations conform to EPRI PWR Primary Water Chemistry Guidelines and RG 1.44, Revision 1
- COL Items:
  - 5.2-4: Develop and implement a Strategic Water Chemistry Plan consistent with the latest version of the EPRI Pressurized Water Reactor Primary Water Chemistry Guidelines.
  - 5.2-5: Develop and implement a Boric Acid Control Program that includes: inspection elements to ensure the integrity of the RCPB components for subsequent service, monitoring of the containment atmosphere for evidence of RCS leakage, the type of visual or other NDE inspections to be performed, and the required inspection frequency.

Copyright 2019 by NuScale Power, LLC.

5.2.4 – Reactor Coolant Pressure Boundary Inservice Inspection and Testing

Inspections per ASME BPVC, Section XI

- Applicable to ASME BPVC Class I components except for SG tubes
  - ISI of SG tubes covered by SG Program

COL Item:

- 5.2-6: Develop a site-specific preservice examination, inservice inspection, and inservice testing program plans in accordance with Section XI of the ASME BPVC and will establish implementation milestones. Identify the implementation milestone for the augmented inservice inspection program. Identify the applicable edition of the ASME Code utilized in the program plans consistent with the requirements of 10 CFR 50.55a.

Copyright 2019 by NuScale Power, LLC.

5.2.5 – Reactor Coolant Pressure Boundary Leakage Detection

Leakage Detection Methods

- CES collected condensate
- CNV pressure
- Radioactivity Monitoring & Chemistry Analysis
- RCS Inventory Mass Balance

- LBB application to secondary side piping covered in 3.6.3

COL Item:

- 5.2-7: Establish plant-specific procedures that specify operator actions for identifying, monitoring, and trending RCS leakage in response to prolonged low leakage conditions that exist above normal leakage rates and below the TS limits. The objective of the methods of detecting and trending the RCPB leak will be to provide the operator sufficient time to take actions before the plant TS limits are reached.

Copyright 2019 by NuScale Power, LLC.

5.4 – Reactor Coolant System Component and Subsystem Design

Section	Title
5.4.1	Steam Generators
5.4.2	Reactor Coolant System Piping
5.4.3	Decay Heat Removal System
5.4.4	Reactor Coolant System High-Point Vents (not discussed)
5.4.5	Pressurizer

Copyright 2019 by NuScale Power, LLC.

5.4.1 – Steam Generators

- Pressure drop
- Heat transfer
- Inspection

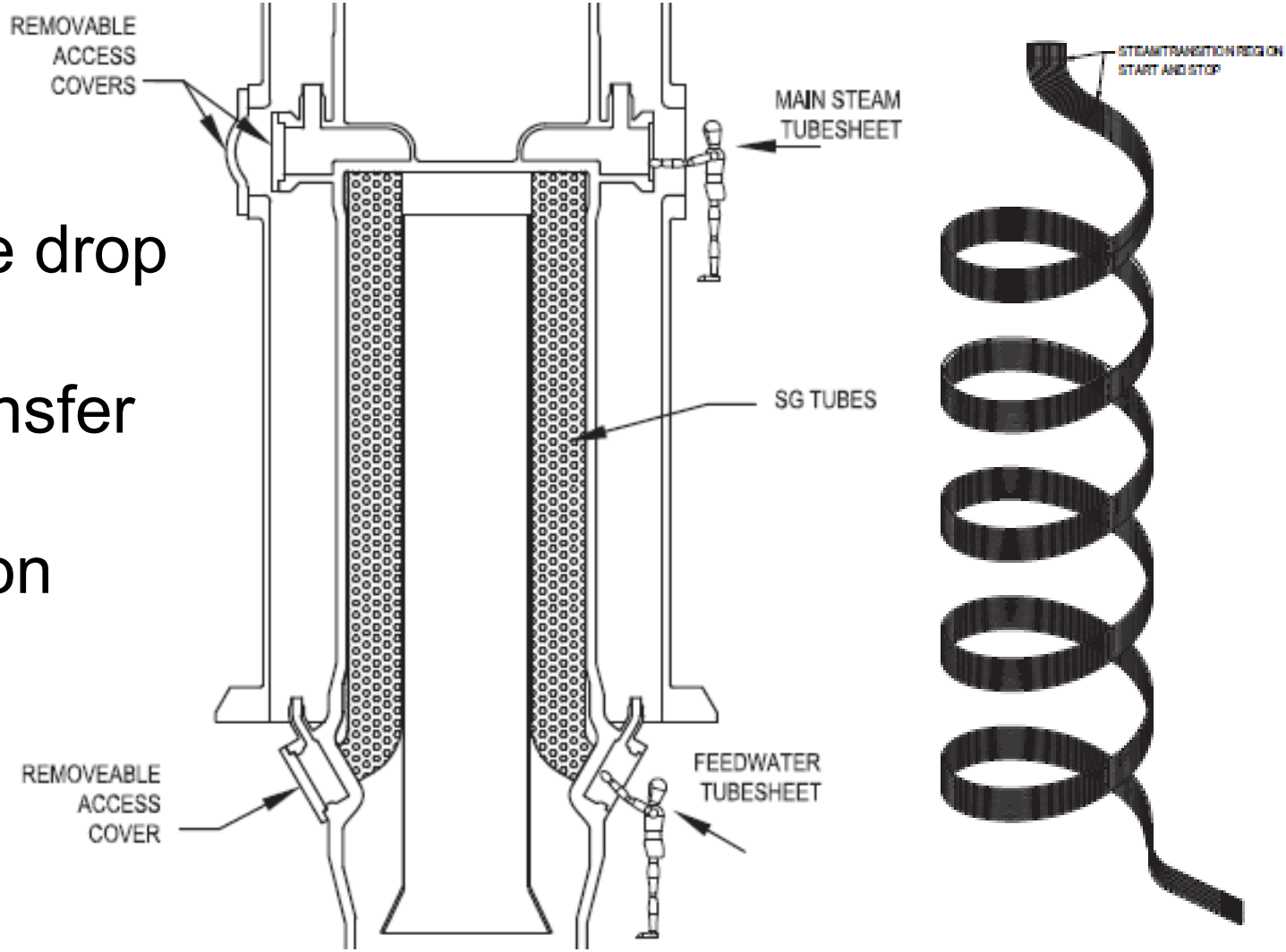

Copyright 2019 by NuScale Power, LLC.

5.4.1 – Steam Generators

- Integral Helical Coil SG Design features
  - Shell side is primary side - Tube side is secondary side
  - Alloy 690 TT (1380 tubes, 77 - 87ft long, 5/8” OD)
  - Low flow in primary (~1ft/sec)
  - Tube wall degradation allowance (0.010” > ASME min wall)
  - Support 100% volumetric inspection
  - Normal access to shell side of tubes from below during refueling
- Incorporation of OE
  - Follow guidance of NEI 97-06 & EPRI (COL Item 5.4-1: Develop and implement a SG Program)

Copyright 2019 by NuScale Power, LLC.

5.4.1 – Steam Generators

- Tube supports
- FIV (3.9.2)

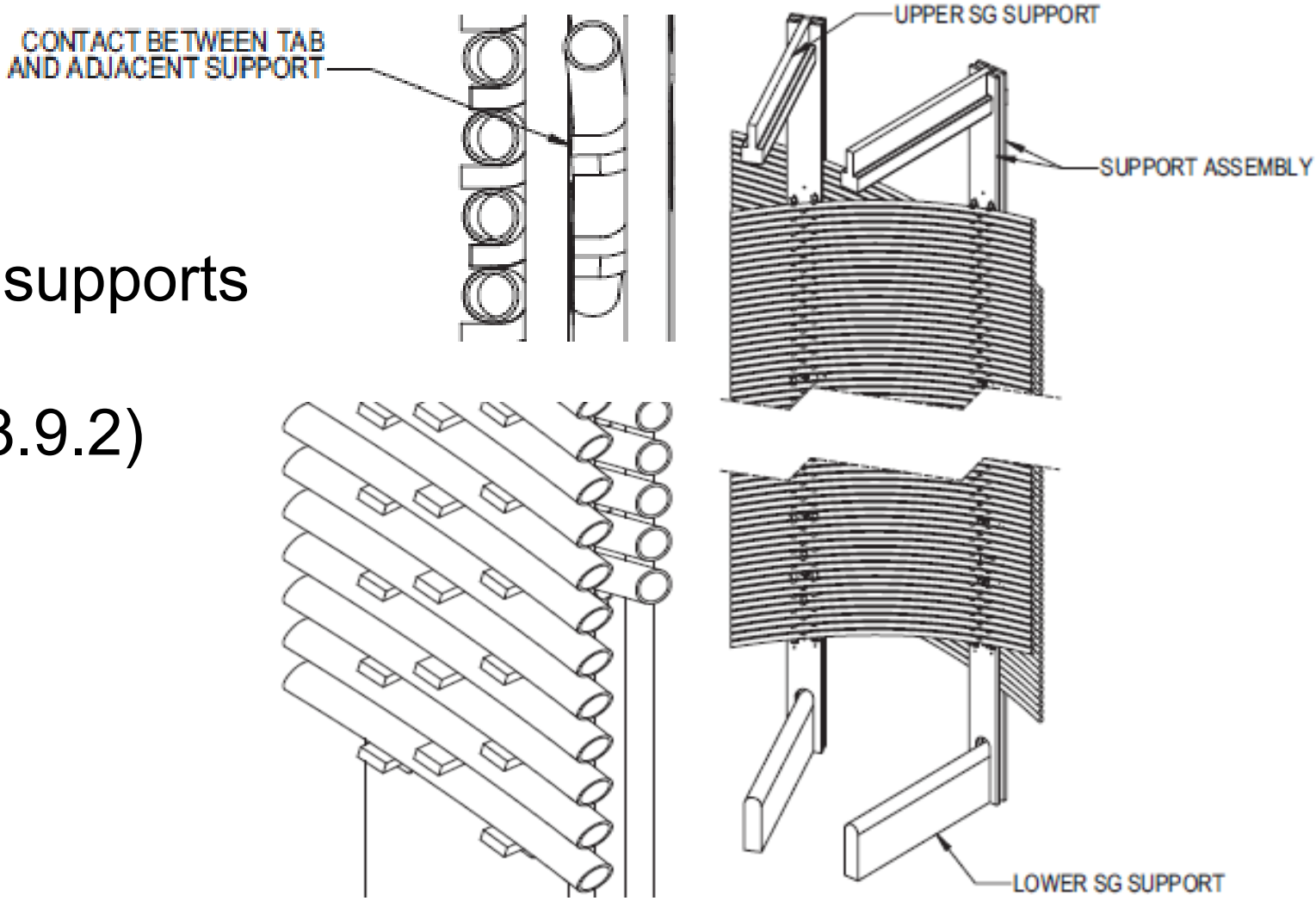

Copyright 2019 by NuScale Power, LLC.

5.4.1 – Steam Generators

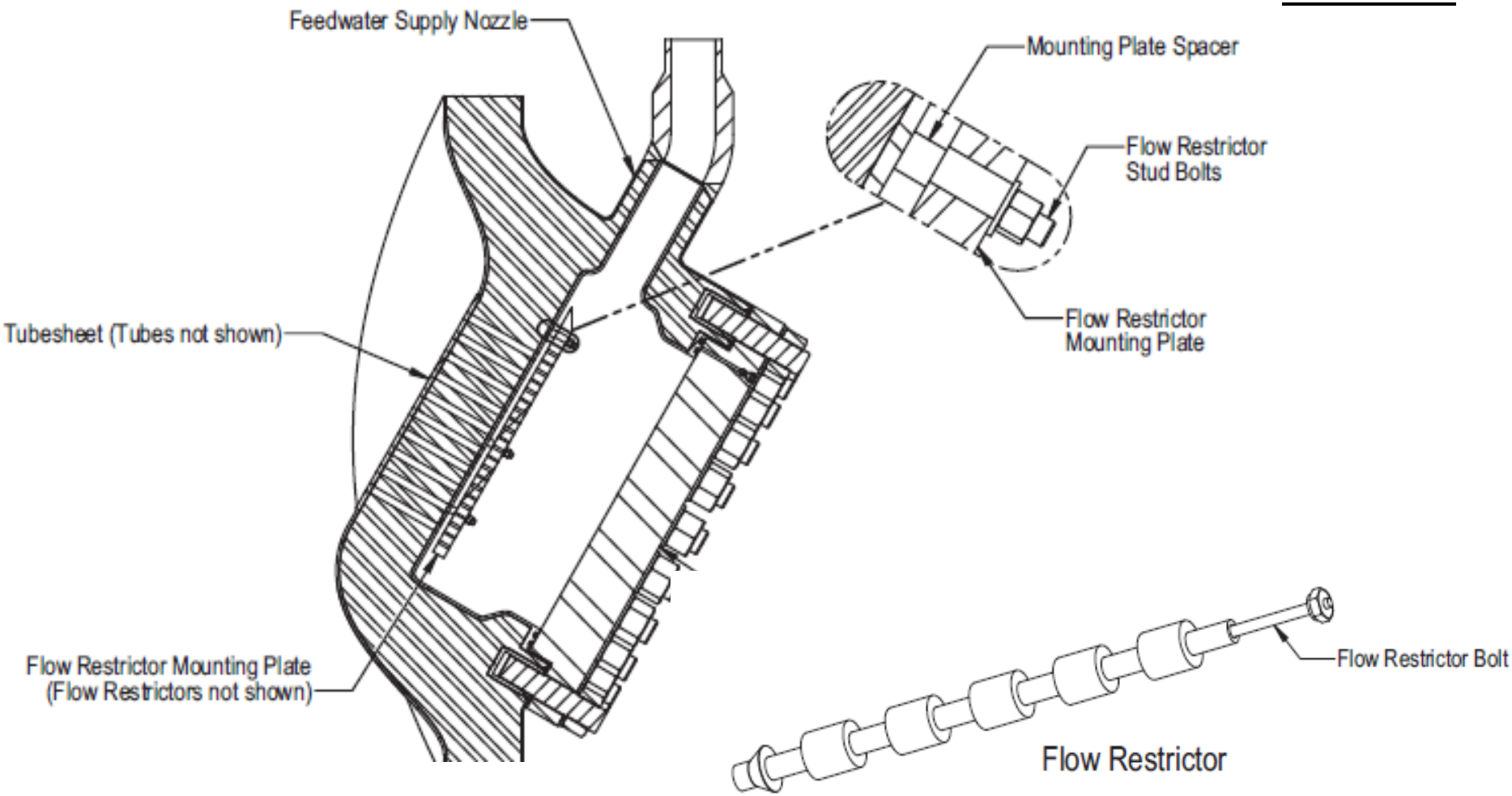

- Limit flow oscillations

Copyright 2019 by NuScale Power, LLC.

5.4.2 – Reactor Coolant System Piping

RCS Piping Design

- NPS 2 – Schedule 160
- Austenitic stainless steel – SA-312, Type 304/304L (dual certified)

RCS Piping Includes:

- Pressurizer spray supply
- RCS injection
- RCS discharge
- RPV high-point degasification piping

Copyright 2019 by NuScale Power, LLC.

5.4.3 – Decay Heat Removal System

- Two phase Natural circulation system connected to SG
- Condensers submerged in UHS
- Closed loop is established on signal or loss of power by CIV
- Two independent single failure proof trains
- Design pressure matches RCS design pressure

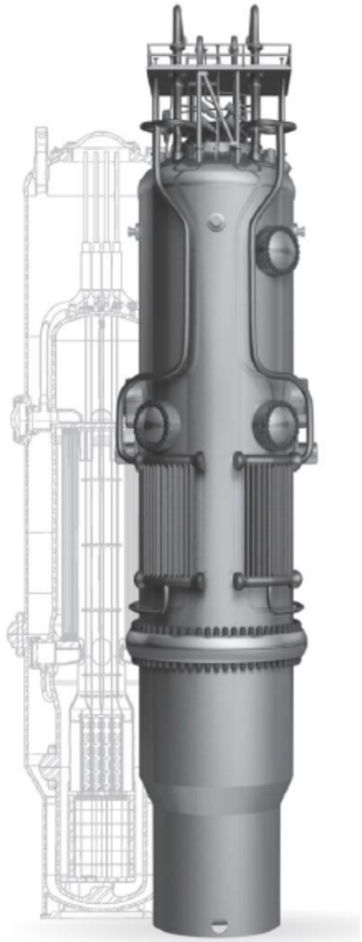

Copyright 2019 by NuScale Power, LLC.

5.4.3 – Decay Heat Removal System

Thermal-Hydraulic Performance dependent on:

- RCS temperature
- Reactor pool water temperature
- Water inventory
- Noncondensable gas accumulation
- Pressure losses
- Driving head

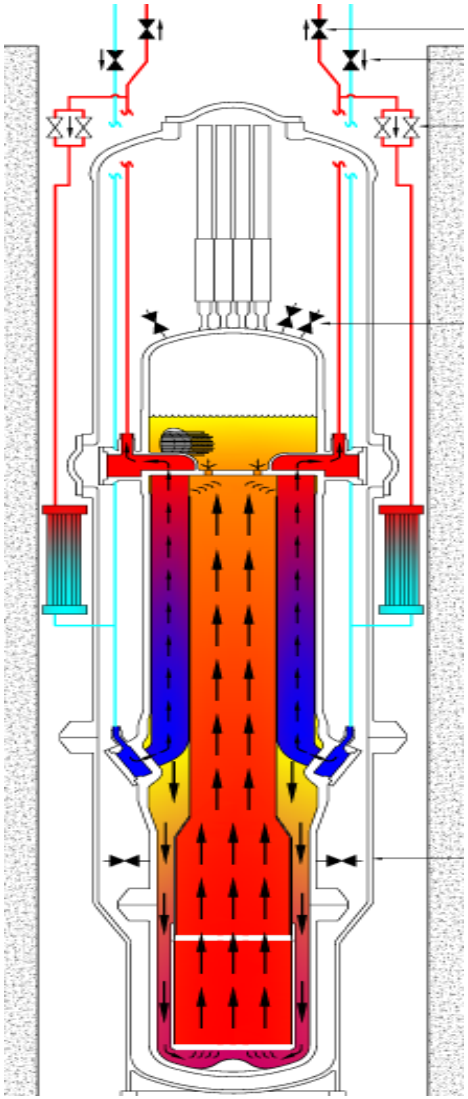

Copyright 2019 by NuScale Power, LLC.

5.4.3 – Decay Heat Removal System

Nominal two train cool down (4 hour duration)

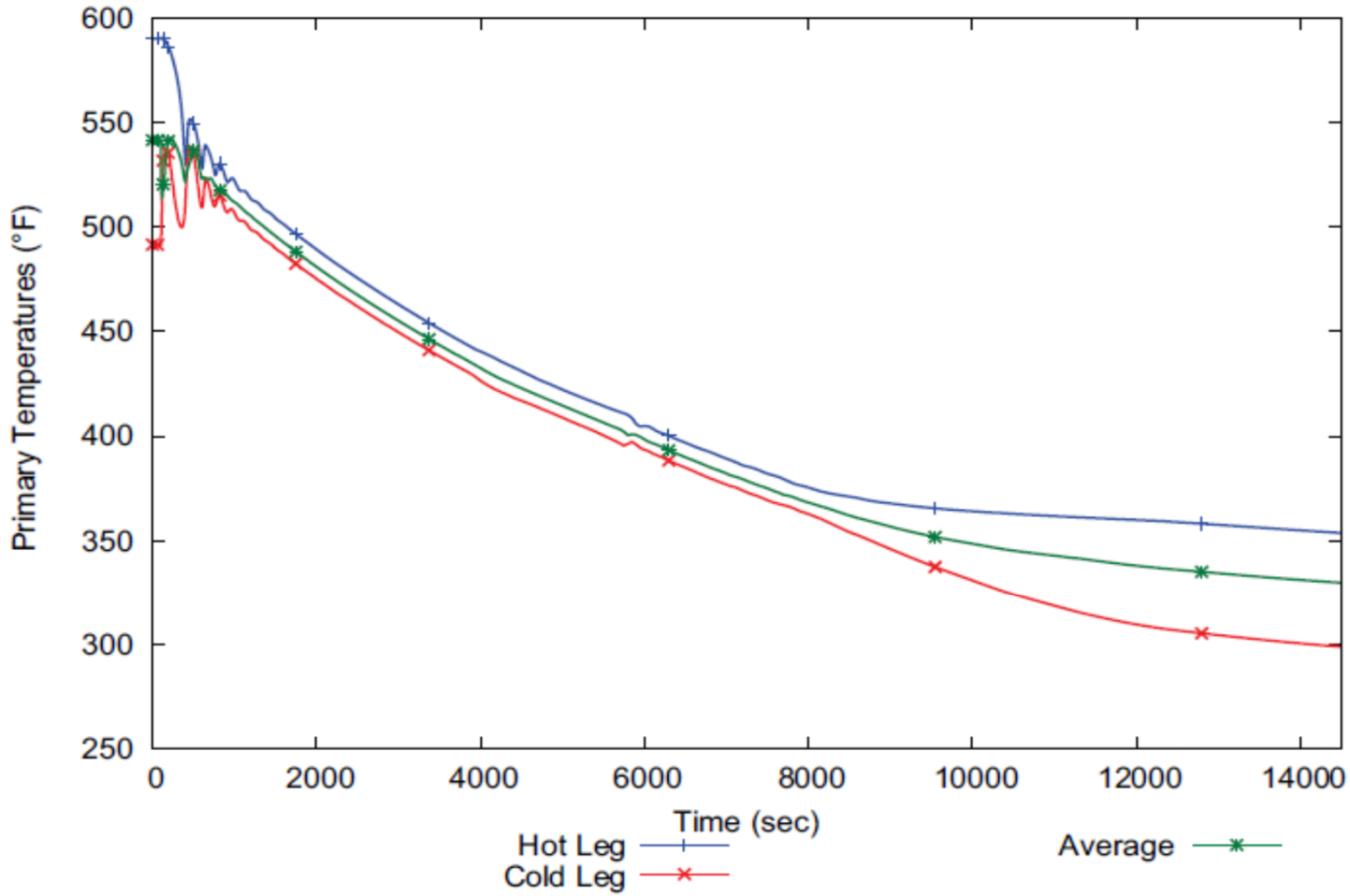

Copyright 2019 by NuScale Power, LLC.

5.4.5 – Pressurizer

- Integral to the Reactor
- Baffle plate separates PZR from RCS
- Pressure controlled by heaters/sprays
- Level controlled by CVCS
- Highpoint degas line can be used during normal operation

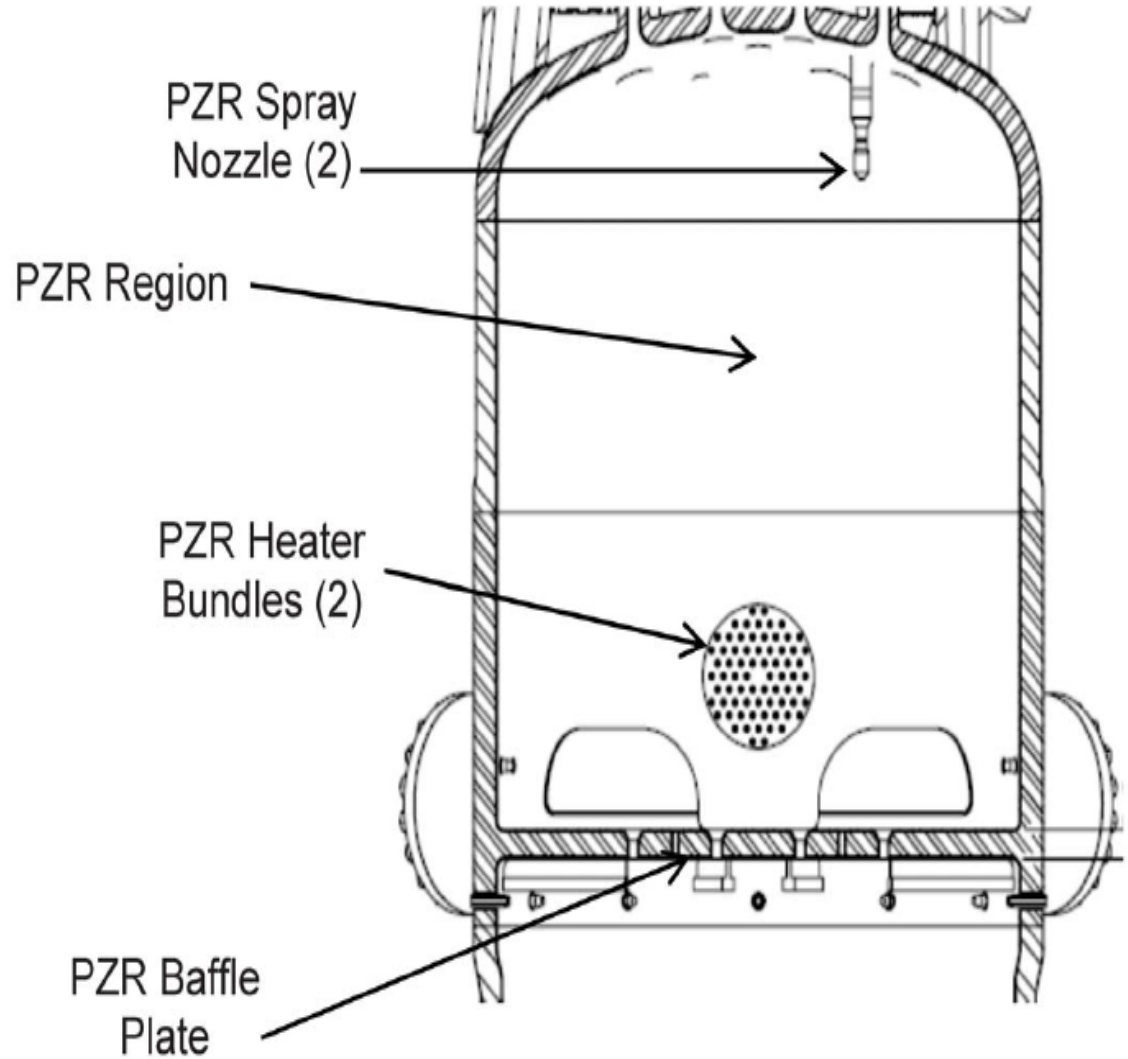

Copyright 2019 by NuScale Power, LLC.

Acronyms

- AOO – Anticipated Operational Occurrences
- ASME – American Society of Mechanical Engineers
- ASTM – American Society for Testing and Materials
- BPVC – Boiler Pressure Vessel Code
- CES - Containment Evacuation System
- CIV – Containment Isolation Valve
- CNV - Containment Vessel
- COL - Combined License
- CRDM – Control Rod Drive Mechanism
- CVCS - Chemical and Volume Control System
- DHRS – Decay Heat Removal System
- ECCS – Emergency Core Cooling System
- EFPY – Effective Full Power Years
- EPRI – Electric Power Research Institute
- ^{o}F – degrees Fahrenheit
- FIV – Flow Induced Vibration
- FSAR – Final Safety Analysis Report
- ft – feet
- FW - Feedwater
- FWIV – Feedwater Isolation Valve
- HZP – Hot Zero Power
- ISI – Inservice Inspection
- LOCA – Loss of Coolant Accident
- LTOP – Low Temperature Overpressure Protection
- MPS - Module Protection System
- MSIV – Main Steam Isolation Valve
- MSS – Main Steam System
- MWt – Megawatts thermal

Copyright 2019 by NuScale Power, LLC.

Acronyms

- NDE – Non-destructive Examination
- NEI – Nuclear Energy Institute
- NPM - NuScale Power Module
- NPS – Nominal Pipe Size
- OD – Outside Diameter
- OE – Operations Experience
- psia – pounds per square inch absolute
- P-T – Pressure and Temperature
- PTS – Pressurized Thermal Shock
- PWR – Pressurized Water Reactor
- PWSCC – Primary Water Stress-Corrosion Cracking
- PZR – Pressurizer
- RCCWS – Reactor Component Cooling Water System
- RCPB – Reactor Coolant Pressure Boundary
- RCS - Reactor Coolant System
- RG - Regulatory Guide
- RPV – Reactor Pressure Vessel
- RSV – Reactor Safety Valve
- RT_{NDT} – Reference Temperature for nil-ductility transition
- RVV – Reactor Vent Valve
- SG – Steam Generator
- TRV – Thermal Relief Valve
- TS – Technical Specifications
- TT – Thermally Treated
- UHS – Ultimate Heat Sink
- USE – Upper Shelf Energy

Copyright 2019 by NuScale Power, LLC.

Portland Office
6650 SW Redwood Lane,
Suite 210
Portland, OR 97224
971.371.1592

Corvallis Office
1100 NE Circle Blvd., Suite 200
Corvallis, OR 97330
541.360.0500

Rockville Office
11333 Woodglen Ave., Suite 205
Rockville, MD 20852
301.770.0472

Charlotte Office
2815 Coliseum Centre Drive,
Suite 230
Charlotte, NC 28217
980.349.4804

Richland Office
1933 Jadwin Ave., Suite 130
Richland, WA 99354
541.360.0500

Arlington Office
2300 Clarendon Blvd., Suite 1110
Arlington, VA 22201

London Office
1st Floor Portland House
Bressenden Place
London SW1E 5BH
United Kingdom
+44 (0) 2079 321700

http://www.nuscalepower.com
Twitter: @NuScale_Power

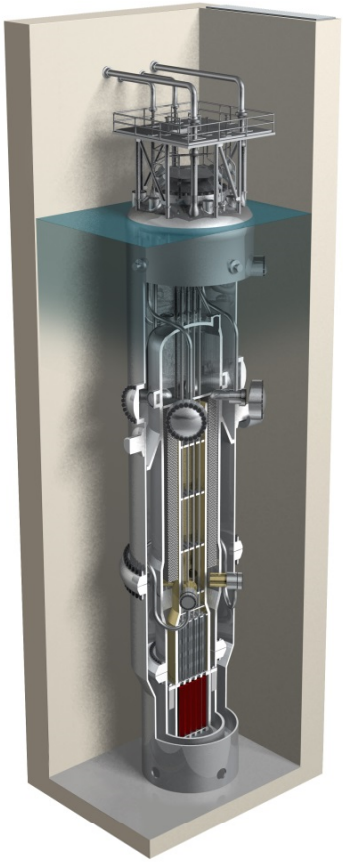

NUSCALE™
Power for all humankind

Copyright 2018 by NuScale Power, LLC.

United States Nuclear Regulatory Commission

Protecting People and the Environment

Safety Evaluation with Open Items: Chapter 5 "REACTOR COOLANT SYSTEM AND CONNECTING SYSTEMS"

NuScale Design Certification Application

ACRS Subcommittee Meeting
April 17, 2019

Agenda

- NRC Staff Review Team
- Summary of the NRC Staff's Review
- Section 5.2.1
- Section 5.2.2
- Section 5.2.3
- Section 5.2.4
- Section 5.2.5
- Sections 5.3.1-5.3.3
  - Pressure and Temperature Limits Methodology (PTLR)
- Section 5.4.1 & 5.4.2
- Sections 5.4.4
- Sections 5.4.5
- Section 5.4.6

NRC Staff Review Team

- Technical Reviewers:
  - Section 5.2.1 (Nicholas Hansing) NRO/MEB
  - Section 5.2.2 (John Budzynski) NRO/SRSB
  - Section 5.2.3 (Andrew Yeshnik) NRO/MCB
  - Section 5.2.4 (Stephen Cumblidge) NRR/MPHB
  - Section 5.2.5 (Chang Li) NRO/SCPB
  - Sections 5.3.1-5.3.3 (Dan Widrevitz) NRO/MCB
  - Section 5.4.1 & 5.4.2 (Gregory Makar & Leslie Terry)
  - Section 5.4.4 (Boyce Travis) NRO/SRSB
  - Section 5.4.5 (Boyce Travis) NRO/SCPB
  - Section 5.4.6 (Alexandra Siwy) NRO/SRSB

- Project Management:
  - Bruce Bavol, Project Manager NRO/DLSE

Summary of the Staff's Review

- NRC Staff's safety evaluation report (SER) is based on DCA, Rev. 1
- During the review, the NRC staff issued 28 RAIs
- SER contains 6 open items and 5 confirmatory items
- NuScale has incorporated information in Rev. 2 to the DCA to address staff's confirmatory items
- Supporting SER for Section 5.3.2.4.1 - "Pressure and Temperature Limits Methodology"
- 3 requested Exemptions
  - SER Section 5.4.5, "Reactor Coolant System High-Point Vents"
  - SER Section 5.4.6.3, "Pressurizer Component Exemptions" (PZR heaters and PZR level indication)
- ACRS Full-Committee briefing scheduled on May 2, 2019.

Staff's Evaluation of Sections:

Section 5.2.1	Compliance with Codes and Code Cases
Section 5.2.2	Overpressure Protection
Section 5.2.3	Reactor Coolant Pressure Boundary Materials
Section 5.2.4	Inservice Inspection and Testing of the Reactor Coolant Pressure Boundary
Section 5.2.5	Reactor Coolant Pressure Boundary Leakage Detection
Section 5.3.1	Reactor Vessel Materials
Section 5.3.2	Pressure-Temperature Limits, Upper-Shelf Energy, and Pressurized Thermal Shock

Staff's Evaluation of Sections (continued):

Section 5.3.3	Reactor Vessel Integrity
Section 5.4.1	Steam Generator Materials and Design
Section 5.4.2	Steam Generator Program
Section 5.4.3	Reactor Coolant System Piping and Check Valves
Section 5.4.4	Decay Heat Removal System
Section 5.4.5	Reactor Coolant System High-Point Vents
Section 5.4.6	Pressurizer Exemptions

Section 5.2.1 Compliance with Codes and Code Cases

- Staff reviewed Section 5.2.1.1 and 5.2.1.2 in accordance with the respective SRP sections
- American Society of Mechanical Engineers (ASME) Boiler and Pressure Vessel (BPV) Code of Record is the 2013 Edition (no addenda)
- No proposed alternatives under 10 CFR 50.55a(z) for ASME BPV Code
- Proposed inspections, tests, analyses, and acceptance criteria (ITAAC) verify compliance with ASME BPV Code Section III requirements
  - These are consistent with staff-approved standardized ITAAC guidance
- Applicable ASME BPV Code, Section III, Code Cases have been identified
  - Accepted in RG 1.84
  - Applicable conditions have been applied
- ASME BPV Code, Section XI and ASME OM Code Case identification has been deferred to the COL applicant
- Staff concludes that the applicant has met the requirements of 10 CFR 50.55a by:
  - Identifying the ASME BPV Code of Record, which is incorporated in 10 CFR 50.55a
  - Classifying reactor coolant pressure boundary (RCPB) components and non-RCPB components designated as Quality Group B and C components as ASME BPV Code Section III Class 1, Class 2, and 3 components, respectively
  - Identifying ASME Code Cases that are acceptable for use in the NuScale design
- Staff concludes that the applicant has met the requirements of 10 CFR 52.47(b)(1) for construction in accordance with the ASME BPV Code

Section 5.2.2 Overpressure Protection

- Purpose

  Provides overpressure protection features to protect the RCPB, auxiliary systems' primary sides connected to the RCS, and the SGs secondary side

- Regulatory Basis

  - GDC 15
  - GDC 31
  - 10 CFR 50.34(f)(2)(x) and 10 CFR 50.34(f)(2)(xi)
  - 10 CFR 52.47(a)(8)
  - 10 CFR 52.47(b)(1)

- Guidance Documents

  - SRP Section 5.2.2, "Overpressure Protection"
  - SRP Section 5.4, "Reactor Coolant System Component and Subsystem Design"
  - BTP 5-2, "Overpressurization Protection of Pressurized-Water Reactors While Operating at Low Temperatures"

Section 5.2.2 Overpressure Protection (continued)

- Methods of Compliance
  - GDC 15: RSVs
  - GDC 31: RVVs

- Key Design Considerations and Features

  - Overpressure Protection during Power Operations (above 325 degrees F)
    - Two reactor safety valves (RSVs), each designed to provide 100 percent of the required relief capacity to maintain pressure below 110 % of the design pressure (2,310 psia)
    - Audit was completed that confirmed the design and operation of RSVs

  - Low-Temperature Overpressure Protection System (at or below 325 degrees F)
    - Three reactor vent valves (RVVs), designed with sufficient capacity to prevent RCPB pressure from exceeding the limiting pressure while operating below the LTOP enabling temperature
    - Audit was completed that review the design of RVVs
    - Audit is ongoing to perform design testing of the RVVs operation

- Staff's Review and Results - With the exception of the one Open Item, the staff finds all other aspects acceptable

Section 5.2.2 Overpressure Protection (continued)

- Open Item (RAI or linked issue)

  - **Open Item 5.2.2-1 changed to Confirmatory item on 02/19/2019**
    - RAI 9132, Question 30711, revise the proposed ITAAC to verify the capability of the RVVs during preoperational testing (SER Chapter 14 evaluates RAI 9132)

  - **Open Item 5.2.2-2**
    - RAI 9469, Question 06.03-6 as a follow-up to RAI 8820, Question 03.09.06-1 and audited to address the ECCS valve design characteristics including the RVVs function related to LTOP operation. (SER Chapter 6 evaluates RAI 9469)

Section 5.2.3 Reactor Coolant Pressure Boundary Materials

Key Design Features and Considerations

- NuScale utilizes commonly used materials: low alloy steel forgings, Type 304L and 316L austenitic stainless steel products, and Alloy 690 products.
  - Reactor pressure Vessel (RPV) - low alloy steel (SA-508 and SA-533) clad with austenitic stainless steel.
  - NuScale commits to RG 1.28, RG 1.31, RG 1.43, RG 1.44, RG 1.50, RG 1.71.
- Reactor coolant will comply with EPRI Primary Water Chemistry Guidelines.

Staff's Review and Evaluation Results

- Staff reviewed RCPB materials in accordance with SRP 5.2.3.
- **Open item 5.2.3-1**: Inadvertent change FSAR Table 5.2-4
- Material selection meets ASME BPVC Section III
  - Challenging issue: ASME BPVC treatment of small sized components
  - Impacts findings on GDC 1, GDC 14, GDC 30, and GDC 31.
- The RCPB materials comply with: GDC 4, 10 CFR 50 Appendix G, 10 CFR 50 Appendix B Criteria XIII.

Section 5.2.4 Inservice Inspection and Testing of the Reactor Coolant Pressure Boundary

Regulatory Basis

- GDC 32, “Inspection of Reactor Coolant Pressure Boundary,” as it relates to periodic inspection and testing of the RCPB
- 10 CFR 50.55a, as it relates to the requirements for inspecting and testing ASME Code Class 1 components of the RCPB, as specified in ASME Code, Section XI
- ASME Code Case N-729-4, as modified by 10 CFR 50.55a(g)(6)(ii)(D) for reactor vessel (RV) head inspection

Method of Compliance with GDCs

- The Preservice and Inservice Inspections (PSI and ISI) will Follow ASME Code Section XI “Rules for Inservice Inspection of Nuclear Power Plant Components” for most ASME Class 1 components
- Section 5.2.4, addresses the ISI requirements for the components and configurations unique to the NuScale design

Section 5.2.4 Inservice Inspection and Testing of the Reactor Coolant Pressure Boundary (continued)

Key Design Considerations and Features

- The final ISI program is required to meet the latest ASME Code, Section XI, Edition and Addenda incorporated by reference 18 months before the date scheduled for initial loading of fuel
- Suitable equipment will be developed and installed to facilitate the remote inspection of these areas of the RCPB that are not readily accessible to inspection personnel
- Most Class 1 Components are located inside of the containment

Staff Review

- The staff concludes that the description of the PSI and ISI program is acceptable and meets the inspection and testing requirements of GDC 32 and 10 CFR 50.55a.
- The PSI and ISI program provide reasonable assurance that evidence of structural degradation or loss of leak-tight integrity occurring during service will be detected in time to permit corrective action before the safety function of a component is compromised

No open items

Section 5.2.5 Reactor Coolant Pressure Boundary Leakage Detection

- Regulatory Requirements: GDC30, GDC2
- Review Guidance: NuScale Design-Specific Review Standard (DSRS) Section 5.2.5, RG 1.45
- Review Areas: leakage detection capability, sensitivity and response time; leakage detection systems; seismic qualification; leakage instrumentation in the control room; prolonged low-level RCS leakage; separation of identified and unidentified leakage; intersystem leakage; plant technical specifications; leak-before-break (LBB) leakage detection; initial testing program; ITAAC; and COL information items.
- Eight RAIs were issued; one open item was identified.
- There is one COL information item.

Section 5.2.5 Open Item
LBB LCO

- Regulatory Requirements: GDC 4, 10 CFR 50.36(c)(2)(ii)
- NuScale applies LBB for postulated main steam and feedwater line breaks inside containment to eliminate pipe break analysis and protection designs (pipe whip restrains and jet shields).
- The staff found that NuScale has not adequately addressed the dynamic effects (pipe whip, jet impingement) resulting from the postulated pipe breaks when the leak-before-break leakage limit is exceeded. Other PWRs have used a limiting condition for operation (LCO) to address this issue.

Section 5.2.5 Open Item
LBB LCO (continued)

- In RAI 9201, the staff requested NuScale address GDC 4 dynamic effects along with the LCO for LBB leakage limit to conform with 10 CFR 50.36(c)(2)(ii) TS Rule. NuScale's responses did not adequately consider the dynamic effects from the postulated pipe breaks and that an LCO is required for the LBB leakage limit. This was identified as an open item in the SER.

- Recently, by supplemental response, NuScale proposed a LCO for the LBB leakage limit, which is currently under staff evaluation. The staff is tracking RAI 9201 as an **Open Item 5.2.5-3**.

Section 5.3.1 Reactor Vessel Materials

Section details materials and fabrication for the reactor vessel. NuScale design highly consistent with precedent both in materials and fabrication considerations.

Familiar aspects:

- RV material(s) consistent with those used in operating fleet and other DCDs
- Compliance with ASME and citation of relevant RGs

Unique aspect:

- No welds within geometric beltline of vessel
- Vessel is clad on both sides
- Bolting for RV closure flange is made of SB-637, alloy 718, an austenitic stainless steel.
  Bolts will be submerged in water unlike operating LWR. Bolts were evaluated in Tier 2, 3.13

Section 5.3.2 Pressure-Temperature Limits, Upper-Shelf Energy, and Pressurized Thermal Shock

Section primarily details handling of neutron irradiation effects on RV. Review focused on referenced pressure temperature limits report methodology (PTLR).

Familiar aspects:

- Geometries, neutron flux, materials
- Use of PTLR in DCD

Generally – NuScale design has many beneficial aspects with regards to 5.3.2 review.

Section 5.3.2 Pressure-Temperature Limits, Upper-Shelf Energy, and Pressurized Thermal Shock

Proprietary PTLR Methodology review:

Beneficial aspects:
- Thinner vessel (lower thermal induced stresses)
- Lack of high volume low temperature ECCS (lower PTS risk)
- Absence of welds in geometric beltline
- Superior material properties (to operating fleet)

Challenging aspects:
- Low irradiation temperature (increased embrittlement relative to fluence)
- Limiting embrittlement material is due to geometric discontinuity (lower fluence, stress concentrator)

Section 5.3.2 Pressure-Temperature Limits, Upper-Shelf Energy, and Pressurized Thermal Shock

Review challenges:

- FAVOR cannot model limiting location of NuScale
- RG1.99/10 CFR 50.61 not accurate for irradiation temperature

Review solutions:

- Worked with RES support to audit computational PT limit basis
- Worked with RES to compare NuScale embrittlement to relevant experience and determine that RG1.99/10 CFR 50.61 with degree-per-degree adjustment would remain bounding for NuScale over period of initial license

Section 5.3.3 Reactor Vessel Integrity

This section largely serves as a summary:

> "Although the staff reviews most of the features and topics addressed in this section in other sections of this SER, the integrity of the RV is of such importance that a special summary review of all factors relating to the integrity of the reactor is warranted."

The only unique information reviewed in this section concerned shipment and installation. This information was consistent with precedent.

Section 5.4.1 Steam Generator Materials and Design

Steam Generator Materials and Design - Review Topics

- Selection, processing, testing, and inspection (during fabrication/processing)
- Design for limiting susceptibility to degradation or corrosion
- Fabrication and processing of ferritic carbon and low-alloy steels
- Fabrication and processing of austenitic stainless steel (pressure boundary)
- Compatibility with the coolant (primary and secondary) and cleanliness control
- Access to the primary and secondary sides
- No COL items
- No open items

Section 5.4.1 Steam Generator Materials and Design (continued)

Review Topics (Cont'd)

Unconventional Design Features	Effects on the DCA Review (SG Materials and Design)
• First of a kind primary pressure outside the tube • First of a kind helical coil shape • Higher tube wall thickness to diameter ratio • First of a kind tube support structure • First of a kind feedwater inlet and steam plenum design • First of a kind inlet flow restrictors with mounting plate (secondary side)	• Degradation assessment different than operating fleet • New structural integrity evaluation required for tube collapse rather than burst (allowable tube thinning) • Effect of secondary coolant on degradation • New flow effects and loose parts potential inside and outside tubes • Tube support design and inspection requirements • Tube support and flow restrictor dynamic effects (Chapter 3)

Section 5.4.1 Steam Generator Materials and Design (continued)

Regulatory Basis

- Appendix A to 10 CFR Part 50 (General Design Criteria)
  - GDC 1, “Quality Standards and Records”
  - GDC 4, “Environmental and Dynamic Effects Design Bases”
  - GDC 14, “Reactor Coolant Pressure Boundary”
  - GDC 15, “Reactor Coolant System Design”
  - GDC 30, “Quality of Reactor Coolant Pressure Boundary”
  - GDC 31, “Fracture Prevention of Reactor Coolant Pressure Boundary”
- 10 CFR 50.36 (Technical Specifications)
- 10 CFR 50.55a(c), 10 CFR 50.55a(d), and 10 CFR 50.55a(e) (Codes and Standards)
- Appendix B to 10 CFR Part 50 (Quality Assurance Criteria)
- Appendix G to 10 CFR Part 50 (Fracture Toughness)
- 10 CFR 52.47(b)(1) (ITAAC)

Section 5.4.1 Steam Generator Materials and Design (continued)

Guidance Documents

- NuScale DSRS Section 5.4.2.1, “Steam Generator Materials”
- Regulatory guidance related to the welding of SG components:
  - RG 1.31, “Control of Ferrite Content in Stainless Steel Weld Metal”
  - RG 1.34, “Control of Electroslag Weld Properties”
  - RG 1.43, “Control of Stainless Steel Weld Cladding of Low-Alloy Steel Components”
  - RG 1.50, “Control of Preheat Temperature for Welding of Low-Alloy Steel”
  - RG 1.71, “Welder Qualification for Areas of Limited Accessibility”
- RG 1.36, “Nonmetallic Thermal Insulation for Austenitic Stainless Steel”
- RG 1.28, “Quality Assurance Program Criteria (Design and Construction)”
- RG 1.44, “Control of the Processing and Use of Stainless Steel”
- RG 1.84, “Design, Fabrication, and Materials Code Case Acceptability, ASME Section III”

Section 5.4.1 Steam Generator Materials and Design (continued)

Staff's Review of Steam Generator Materials and Design

- Materials acceptable with respect to selection, fabrication, testing, and inspection
- Crevice areas are limited
- Residual stresses are limited
- SG supports and SG tube supports are made from corrosion-resistant material and their design provides for flow along the tubes
- Degradation allowance consistent with operating experience for Thermally Treated Alloy 690 SG tubes
- Primary and secondary water chemistry control based on Electric Power Research Institute (EPRI) and Nuclear Energy Institute (NEI) guidelines
- Cleaning and cleanliness controls conform to RG 1.28
- Design provides acceptable primary-side access for inspection, removal of corrosion products, and removal of foreign objects (including loose parts)
- Considering the results above, the staff found that the proposed SG materials and design meet the applicable requirements and is acceptable

Section 5.4.2 Steam Generator Program (continued)

Steam Generator Program – Review Topics

- SG program to ensure SG tube structural and leakage integrity
- SG tube plugging criterion
- SG portion of the Standard Technical Specifications
- Operational programs for PSI and ISI of SG tubes
- Ability to inspect the SG tubes
- Two COL items
  - Develop and implement a SG program based on NEI 97-06 and applicable EPRI guidelines
  - Provide plant-specific information, including SG tube plugging criterion and implementation milestones, for the SG PSI and ISI operational programs
- No open items

Section 5.4.2 Steam Generator Program (continued)

Review Topics (Cont'd)

Unconventional Design Features	Effects on the DCA Review (SG Program)
• First of a kind primary pressure outside the tube • First of a kind helical coil shape • Higher tube wall thickness to diameter ratio • First of a kind tube support structure • First of a kind feedwater inlet and steam plenum design • First of a kind inlet flow restrictors with mounting plate (secondary side)	• Degradation assessment different than operating fleet • New structural integrity evaluation required for tube collapse rather than burst (allowable tube thinning) • Ability to inspect (due to tube shape and surface condition) • Ability to qualify inspection techniques (detection and sizing) • Effect of surface condition on eddy current signals and interpretation • Inspection interval • New flow effects and loose parts potential inside and outside tubes • Tube support inspection requirements —

Section 5.4.2 Steam Generator Program (continued)

Regulatory Basis

- GDC 32, “Inspection of Reactor Coolant Pressure Boundary”
- 10 CFR 50.55a(g) (ASME Code, Section XI, Inservice Inspection)
- 10 CFR 50.36 (Technical Specifications)
- 10 CFR 50.65 (Maintenance Rule)
- Appendix B to 10 CFR Part 50 (Quality assurance for program implementation)

Section 5.4.2 Steam Generator Program (continued)

Guidance Documents

- NEI 97-06, “Steam Generator Program Guidelines”
- NUREG-1430, NUREG-1431, and NUREG-1432, “Standard Technical Specifications”
- NUREG-2194, “Standard Technical Specifications, Westinghouse Advanced Passive 1000 (AP1000) Plants”
- TS Task Force 510, “Revision to Steam Generator Program Inspection Frequencies and Tube Sample Selection”
- RG 1.121, “Bases for Plugging Degraded PWR Steam Generator Tubes”
- BTP 5-1, “Monitoring of Secondary Side Water Chemistry in PWR Steam Generators”

Section 5.4.2 Steam Generator Program (continued)

Staff's Review of the Steam Generator Program

- Design of the SG primary and secondary sides allows for implementation of a SG program
- SG program based on NEI 97-06 and applicable EPRI guidelines
- SG program described in the NuScale GTS
  - NuScale GTS appropriately consistent with STS and TSTF-510
- Generic SG tube plugging criterion determined in accordance with RG 1.121
- Design allows for PSI and ISI of the SGs
- COL applicant will:
  - Develop and implement a SG program based on NEI 97-06 and applicable EPRI guidelines
  - Provide plant-specific information, including SG tube plugging criterion and implementation milestones for the SG PSI and ISI operational programs
- Considering the results above, the staff found that the proposed Steam Generator Program meets the applicable requirements and is acceptable

Section 5.4.3 Reactor Coolant System Piping and Check Valves

Detailed information about the RCS piping and check valves, including the staff's evaluation and conclusion on RCS piping and check valves design features and performance requirements, appears in SER Sections 3.9.1, 3.9.2, 3.9.3, 3.9.6, 3.10, 3.12, 5.2.3, 5.2.4, 5.2.5, 5.4.3, 6.1, 6.3, 6.6, and 10.3.6.

Section 5.4.4 Decay Heat Removal System

Regulatory Basis

- GDC 2, GDC 4, GDC 5 – protection from natural phenomena, environmental effects, and sharing of SSCs
- GDC 14 - requirement that the RCS pressure boundary have an extremely low probability of abnormal leakage, of rapidly propagating failure, and of gross rupture
- GDC 34 - ability of the decay heat removal system (DHRS) to transfer fission product decay heat and other residual heat from the reactor core at a rate such that design limits and conditions are not exceeded
- GDC 44, 45, 46 - cooling water, inspection and testing, as it relates to the ability of the reactor pool to act as the ultimate heat sink to remove heat from the reactor module or DHRS
- GDC 54 - “Piping Systems Penetrating Containment”
- GDC 57 - “Closed System Isolation Valves”

Method of Compliance with GDCs

- DHRS located inside containment, under bioshield, submerged in the reactor pool (only shared SSC for DHRS)
- All seismic category I; similar to piping between the containment and the exterior isolation valve, DHRS piping is classified as robust piping not subject to break considerations
- DHRS performance demonstrated via limiting analyses showing RCS cools to less than 420 F in less than 36 hours

Section 5.4.4 Decay Heat Removal System (continued)

Key Design Considerations and Features

- DHRS performance sensitive to both low and very high inventory. System performs with limiting amount of noncondensable gases above the level sensors (TS limit on system operability) plus a conservatively high amount dissolved in the loop fluid.
- First-of-a-kind test for DHRS to confirm as-built system specifications match analysis
- Ultimately, long-term cooling provided through emergency core cooling system (ECCS) (after 24 hours without power) and conduction to reactor pool

Staff Review

- Staff reviewed failure modes and effects analysis (FMEA) provided for DHRS, audited performance analysis
- Confirmed DHRS was capable of removing adequate heat with only one train available for the full spectrum of Chapter 15 events

Open item

- The evaluation of the exemption request is dependent on the staff's review of the non-LOCA topical report (**Open Item 15.0.2-4**), as analyses demonstrating the function of the DHRS system rely on the non-LOCA model.

Section 5.4.5 Reactor Coolant System High-Point Vents

Regulatory Basis

- 10 CFR 50.34(f)(2)(vi), which requires an applicant:
  - Provide the capability of high point venting of noncondensible gases from the reactor coolant system, and other systems that may be required to maintain adequate core cooling
- 10 CFR 50.46a, which requires:
  - Each reactor must be provided with high point vents for the reactor coolant system, for the reactor vessel head, and for other systems required to maintain adequate core cooling if the accumulation of noncondensible gases would cause the loss of function of these systems

Key Design Considerations and Features

- Three Mile Island (TMI) demonstrated that noncondensible gases (NCGs) could interrupt flow under certain accident scenarios; NRC required NPPs provide a means to permit venting of NCGs that could interfere with circulation
- NuScale design ECCS and long-term cooling function is different from a traditional PWR. For non-loss-of-coolant (LOCA) events, uses DHRS; ultimately, core cooling via ECCS opening the RCS to containment to create a recirculation flow path (steaming from the three RVVs in the steam space of the PZR > condenses in containment to reenter the RV via the two RRVs)

Section 5.4.5 Reactor Coolant System High-Point Vents (continued)

Staff Review

- DHRS not impacted – design basis review considers a limiting inventory of NCGs in the RCS/DHRS, and DHRS loop itself is not connected to the RCS.
- ECCS functionality was considered – NuScale performed a sensitivity study including a substantially larger amount of NCGs in the RCS than could be present initially. While the presence of NCGs affects the minimum cooldown rate, it remains within acceptable limits and the NCGs do not impact ECCS actuation.
- In effect, the NuScale ECCS design functionally acts as a head vent, and the coupled RCS and containment performance is not adversely affected by a limiting amount of NCGs.

Open item

- The evaluation of the exemption request is dependent on the staff's review of the LOCA topical report (**Open Item 15.0.2-2**), as analyses demonstrating the acceptability of the efficacy of the ECCS system in the presence of non-condensable gases rely on the LOCA model.

Section 5.4.6 Pressurizer Exemptions

The applicant requested exemptions to the regulations associated with emergency power for PZR heaters and PZR level indication, which were promulgated as TMI requirements.

Regulatory Basis

- 10 CFR 50.34(f)(2)(xiii) requires an applicant to:

  "Provide pressurizer heater power supply and associated motive and control power interfaces sufficient to establish and maintain natural circulation in hot standby conditions with only onsite power available."

- 10 CFR 50.34(f)(2)(xx) requires an applicant to:

  "Provide power supplies for pressurizer relief valves, block valves, and level indicators such that: (A) Level indicators are powered from vital buses; (B) motive and control power connections to the emergency power sources are through devices qualified in accordance with requirements applicable to systems important to safety and (C) electric power is provided from emergency power sources."

- NUREG-0578: Underlying purpose of 10 CFR 50.34(f)(2)(xiii) and (xx) was to ensure natural circulation core cooling following loss of offsite power (LOOP) while decreasing reliance on ECCS to accomplish that function.

Section 5.4.6 Pressurizer Exemptions (continued)

Key Design Considerations and Features

- NuScale design is fundamentally different from traditional PWRs:
  - Inherent natural circulation cooling during normal and off-normal conditions
  - PZR heaters not credited to maintain natural circulation following LOOP
  - DHRS removes decay heat via SGs, maintaining natural circulation
  - No PZR block or relief valves

Staff Review

- DHRS maintains natural circulation following LOOP with no PZR heater operation and no ECCS operation in the short term
- No need for PZR heater operation → no need for PZR level indication
- NuScale design meets the underlying purpose of the rules by providing means for natural circulation cooling following a LOOP that does not rely on ECCS
- Requested exemptions meet 10 CFR 52.7 and 10 CFR 50.12(a), so the staff recommends granting the exemptions

Questions/comments from members of the public before the closed session starts?

Non-Proprietary

Section 5.2.5 Open Item (Backup Slide) LBB Safety Concern

Leakage < LBB Leakage Limit Stable crack growth, No break FSAR Section 3.6.3 • LBB Analysis • Critical Crack Size and LBB Leakage Limit • Leakage Detection and Monitoring	Leakage > LBB Leakage Limit Crack growth becomes unpredictable and pipe breaks could occur. SAFETY CONCERNS ➢ No LBB analysis is applicable and postulated MSS and FWS line breaks could occur. ➢ No protection is designed against dynamic effects of postulated MSS/FWS pipe breaks resulting from the dynamic effects of the postulated pipe breaks. ➢ No MSS/FWS pipe break analysis is to ensure the integrity of the fission products barriers, instrumentation for the modular protection system, ECCS, and CRDM. The high energy line pipe break is unpredictable and catastrophic. ➢ Inadequate Protection: The unit must be shut down promptly to avoid a potential violation of GDC 4.

Section 5.2.5 Open Item (Backup Slide) LBB Leakage Limit and TS LCO Rule

- SRP Chapter 15 and NuScale DCA Part 2 Chapter 15, transient and accident analysis, assume GDC 4 is satisfied.
- NuScale DCA Part 2, Section 6.2.4 identifies the main steam (MSS) / feedwater (FWS) piping in containment as part of the containment boundary (i.e., fission product barrier).
- The staff's view is that the MSS/FWS LBB leakage limit is an operating restriction that is an assumption of a design basis accident or transient analysis that either assumes the failure of or presents a challenge to the integrity of a fission product barrier.
- The MS/FW LBB leakage limit satisfies Criterion 2 of 10 CFR 50.36(c)(2)(ii) for an LCO.

ML16099A398

Section 5.4.2 (backup slide)
NuScale Steam Generator Tube Plugging Criterion

Background

- In order to maintain tube integrity, the proposed Steam Generator Program, Section 5.5.4 of the Generic Technical Specifications (GTS), requires tubes to be plugged if flaws exceed a certain percentage of the wall thickness
- The NuScale GTS propose a value of [40%] through wall for plugging
- The brackets indicate this is a preliminary value that must be finalized by the combined license applicant (e.g., flaw measurement and growth uncertainty)

Integrity Requirements

- Structural integrity
  - Limiting structural performance criterion for this design is a factor of 3.0 on the normal operating differential pressure (NODP)
  - Plugging criterion based on tube collapse
- Accident-induced leakage
- Operational leakage

Section 5.4.2 (backup slide)
NuScale Steam Generator Tube Plugging Criterion

Regulatory Guide 1.121

"Bases for Plugging Degraded PWR Steam Generator Tubes"

- Minimum acceptable wall thickness and unacceptable defects
- Both analytical and experimental justification
  - Three categories of unacceptable defects
  - Minimum acceptable wall thickness to ensure tube integrity under normal operating and accident conditions
  - Application of analytical and loading criteria in evaluating the minimum acceptable tube thickness to maintain adequate margins
  - Allowable flaw size should include allowances for degradation during operation and for measurement uncertainty
- Degradation normally limited by burst rather than collapse

Section 5.4.2 (backup slide)
NuScale Steam Generator Tube Plugging Criterion

Plant-Specific Factors

- Forms of degradation
- Qualified non-destructive examination techniques to detect and characterize flaws from degradation
- Growth rates of flaws

Condition Monitoring

- Evaluates present condition of tubing

Operational Assessment

- Evaluates whether tubing integrity will be maintained for the next cycle
- Accounts for growth of flaws left in service

Section 5.4.2 (backup slide)
NuScale Steam Generator Tube Plugging Criterion

<u>Staff Evaluation of the Plugging Criterion</u>

- Contractor support – Engineering Mechanics Corporation of Columbus (Emc^2)
- Use NRC-sponsored 600ºF collapse tests on Alloy 600 steam generator tubing to determine a correlation between loading and collapse pressure
  - NUREG/CR-0718, NUREG/CR-2336 (Steam Generator Tube Integrity Program reports from Pacific Northwest National Laboratories)
- Apply the correlation to NuScale SG tubing using Alloy 690 TT properties
- ABAQUS finite element analysis
- Model both straight tube and helical coil tube
- Refine the mesh using the straight tube model
- Evaluate flat-bottom volumetric flaws using helical coil tube model
- Determine collapse pressure based on depth and axial extent of wall thinning

Section 5.4.2 (backup slide)
NuScale Steam Generator Tube Plugging Criterion

Finite Element Analysis Mesh for Staff Evaluation of Tube Wear

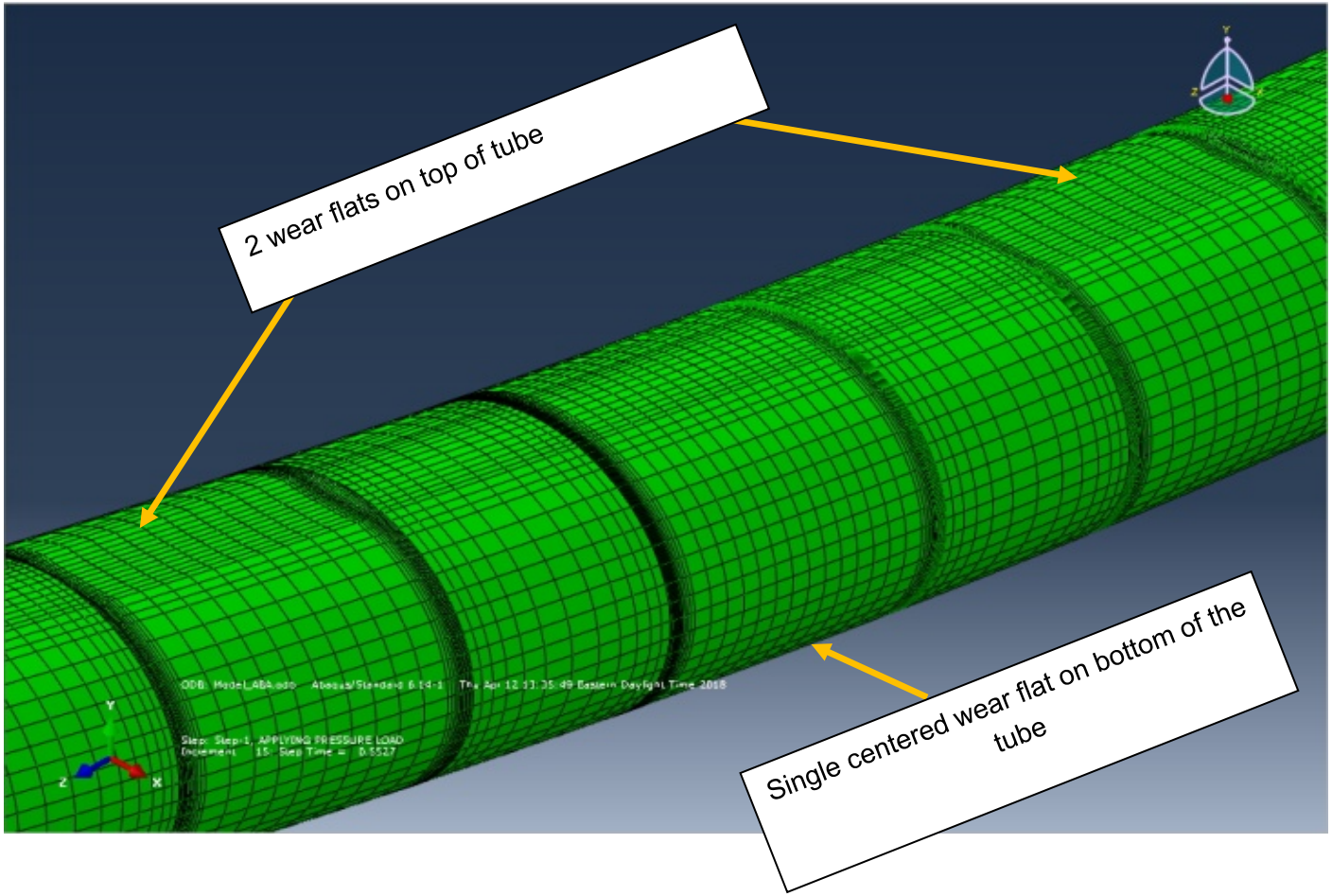

Section 5.4.2 (backup slide)
NuScale Steam Generator Tube Plugging Criterion

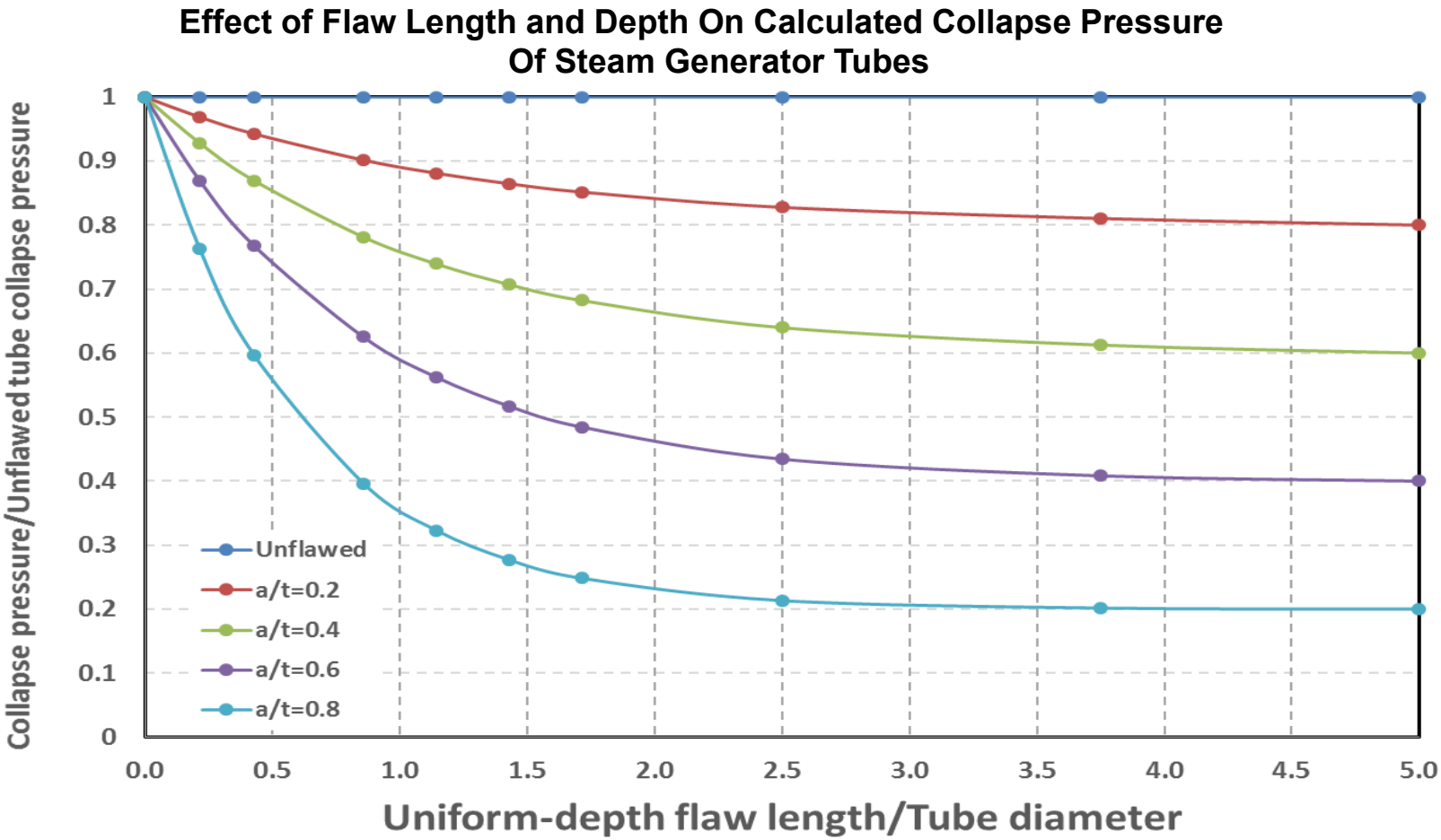

Section 5.4.2 (backup slide)
NuScale Steam Generator Tube Plugging Criterion

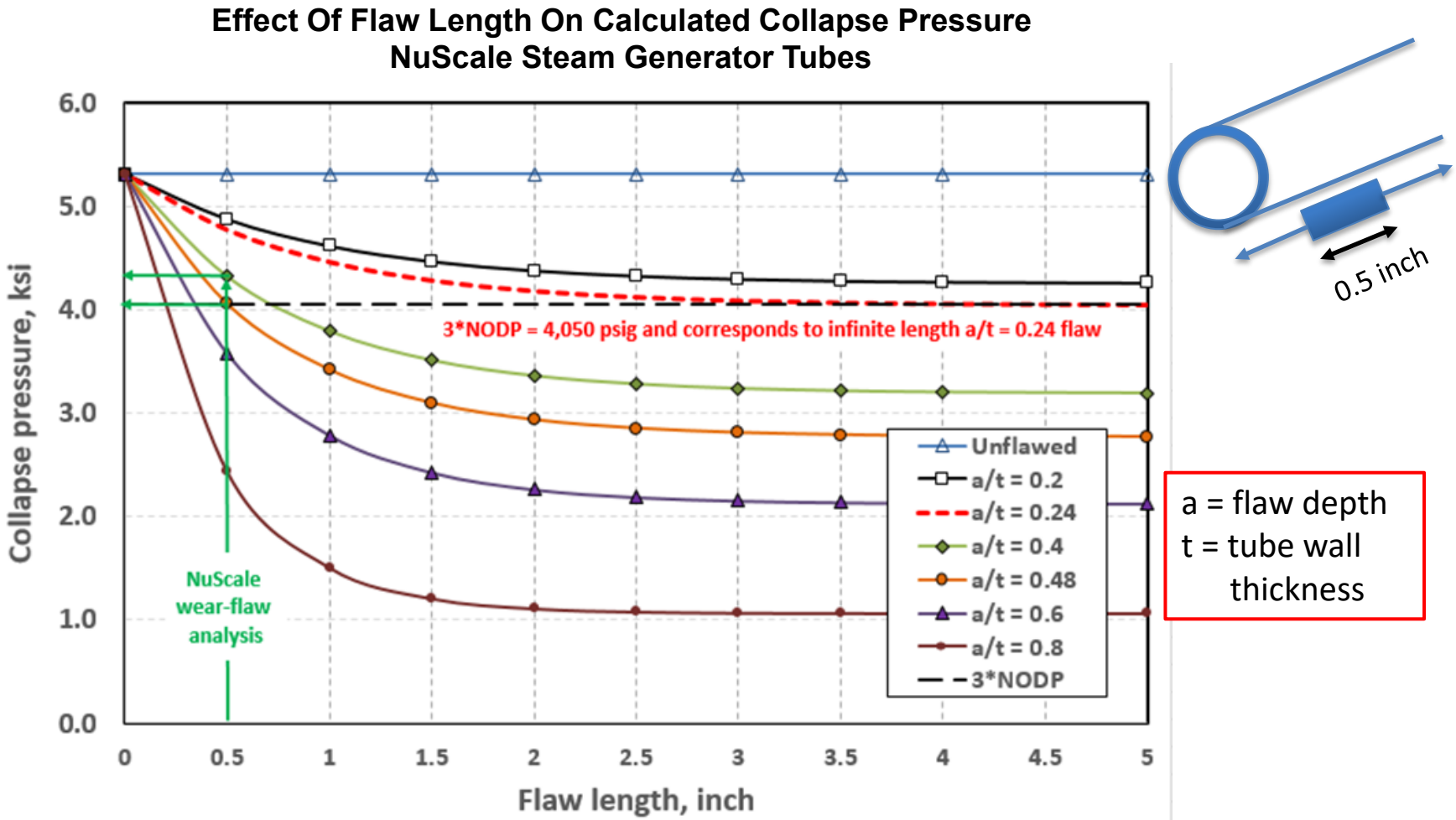

Section 5.4.2 (backup slide)
NuScale Steam Generator Tube Plugging Criterion

Observations

- Predicted collapse pressure is greater than or equal to 3xNODP for the 40% deep, flat-bottomed flaw with axial length 0.5 inch
- Predicted collapse pressure is equal to 3xNODP for the 40% deep, flat-bottomed flaw with axial length 0.72 inch
- A wear flaw with a depth of 24% of the tube thickness has a predicted collapse pressure greater than or equal to 3xNODP regardless of the flaw length