NAC INTERNATIONAL

NAC-MPC & NAC-UMS CoC Renewal Application Projects

Pre-submittal Meeting No. 2 with US Nuclear Regulatory Commission

March 26, 2019

Agenda

- Introduction
  - Key Personnel
  - NAC-MPC and NAC-UMS CoC Background
  - Regulations, Guidance, and Precedence
  - Overall Timeline for Projects
- Follow-up from First Pre-Submittal Meeting
- Work Completed Since First Pre-Submittal Meeting (9/17)
  - Time Limited Aging Analyses
  - Aging Management Programs
  - Pre-Application Inspection at Maine Yankee
  - CoC Application Development
- Remaining Activities (CY 2019-2020)
- Final Questions/Review of Actions

Introductions

- **Key NAC Project Team Members**
  - George Carver, VP, Engineering and Licensing
  - Wren Fowler, Director, Licensing
  - Gary Tjersland, Director, Cask Operations
  - Eric Shewbridge, Project Manager
- **Key NAC Client Project Participants**
  - Paul Plante, Cask Relicensing Manager, 3 Yankees
  - Neil Fales, Aging Management Programs Manager, 3 Yankees
  - Cheryl Olson, ISFSI Manager-LACBWR, Dairyland Power Cooperative
  - Steve Edwards, Spent Fuels-General Office, Duke Energy
  - Matt Keene, Spent Fuels-General Office, Duke Energy
  - Chris Long, Spent Fuels-General Office, Duke Energy
  - Luke McIntyre, Spent Fuels-Palo Verde, Arizona Public Service
  - Kyle McVay, Spent Fuels—Palo Verde, Arizona Public Service

NAC-MPC and NAC-UMS CoC Background

- **NAC-MPC**
  - CoC granted April 2000 for initial 20 year term
  - 8 Amendments; Amendments 7 and 8 became effective on March 4th
  - Requesting 40-year period of extended operation
  - Deadline for timely renewal: March 2020
  - Intend to submit by December 2019
  - Applicable Sites: Connecticut Yankee, Yankee Atomic, Dairyland LACBWR
  - All stored spent fuel assemblies (SFAs) are low burnup (<45,000 MWd/MTU)
  - SFA cladding includes both zircaloy and stainless steel

NAC-MPC and NAC-UMS CoC Background

- **NAC-UMS**
  - CoC granted November 2000 for initial 20 year term
  - 7 Amendments; Amendment 7 is in Rulemaking
  - Requesting 40 year period of extended operation
  - Deadline for timely renewal: October 2020
  - Intend to submit by September 2020
  - Applicable Sites: Maine Yankee, Palo Verde (APS), McGuire (Duke), and Catawba (Duke)
  - SFAs are all zirconium alloy clad, and both low (≤ 45,000 MWd/MTU) and high (> 45,000 MWd/MTU) burnups
  - Only APS currently stores uncanistered HBU SFAs in accordance with CoC Amendment No. 5
  - MY has stored canistered HBU (< 50,000 MWd/MTU) in Damaged Fuel Cans (DFCs)

Regulations, Guidance, and Precedence

- NUREG 1927, Revision 1
- NUREG 2214, MAPS (Draft 10/17)
- NEI 14-03, Revision 2
- EPRI CISCC Susceptibility Assessment Criteria Report (Sep 2015)
- EPRI Aging Management Guideline (March 2017)
- ASME Section XI Code Case N-860 (Draft)
- NUHOMS 1004 CoC Renewal Application
- VSC-24 CoC Renewal Application
- EPRI Report TR-106440 Evaluation of Expected Behavior of LWR SS-Clad Fuel in Long-Term Storage (April 1996)

NAC-MPC/NAC-UMS CoC Renewal Project Timeline

NAC INTERNATIONAL

Industry Interaction

SSC: Systems, Structures, Components
AMR: Aging Management Review
TLAA: Time Limited Aging Analyses
AMP: Aging Management Program

PHASE 1 (2013)

Peer Review 1 Peer Review 2 Peer Review 3

Project Set-up/ Industry Interaction	SSC Scoping Process	AMR Process; EPRI NDE Demo and Pre-application inspection No. 1 at MY	TLAA and AMP Processes; Planning for Pre-application inspection No. 2 at MY	Pre-application inspection No. 2 at MY	Final App Reviews and Submittals MPC: Dec 2019 UMS: Sep 2020
2014	2015	2016	2017	2018	2019/2020

PHASE 2

NRC Review

2020/2021
PHASE 3

NAC-MPC/NAC-UMS CoC Renewal Project
Follow-up from First Pre-Submittal Meeting

- **Structure, System, Component (SSC) Scoping Process Results**
  - ISFSI Pad is not included in CoC Renewal SSC Scope for NAC-MPC Systems
  - ISFSI Pad AMP is being developed for sites to include in their site-specific Aging Management Program for Category C pads
  - Package will include basis of ISFSI Reinforced Concrete Pad being in scope on a site-specific basis, identification of aging effects requiring management, aging management review results table, and detailed ISFSI Reinforced Concrete Pad aging management program (AMP)
- **Applicability of NAC-UMS pre-application inspections to NAC-MPC systems**
  - Sister designs-similar materials and dimensions
  - Entire NAC NAC-MPC and NAC-UMS fleet bounded by CISCC rating at Maine Yankee
- **Level of detail to be included in AMPs**
  - AMPs were developed based on NUREG 2214 MAPS (draft) templates and were modified based on guidance from 1) EPRI Aging Management Guidance, 2) NEI MAPS comments submitted in December 2017, and 3) GL's current inspection methods and acceptance criteria
  - A total of five (5) AMPs are included in the NAC-MPC System CoC Renewal Application

- **Time Limited Aging Analyses (TLAAs)**
  - Review of approximately 1,250 Design Basis Documents for each system against TLAA Criteria in NUREG 1927 R1
  - Results were documented in Access database
  - Summary reports are to be provided in application appendix
  - TLAAs were developed that include:
    - Fatigue Evaluation
    - Corrosion Analysis
    - Aging Analysis for neutron absorber and neutron shield components
  - Calculations supporting TLAAs are to be provided in application appendix

NAC-MPC/NAC-UMS CoC Renewal Project
Work Done Since First Pre-Submittal Meeting

- **Aging Management Programs (AMPs)**
  - Developed based on NUREG 2214, MAPS (draft) templates as modified by guidance found in EPRI Aging Management Guidance (EPRI 3002008193) and current site practices
  - Draft AMPs were utilized in development of pre-application inspection scope, methods of inspection, and acceptance criteria
- **AMPs were developed for the following:**
  - Localized Corrosion and Stress Corrosion Cracking (SCC) of Welded Stainless Steel TSCs
  - Internal Vertical Concrete Cask (VCC) Metallic Components
  - External VCC Metallic Components
  - Reinforced VCC Structure
  - Transfer Casks and Transfer Adapters
  - High Burnup Fuel Aging Management Program (not applicable to NAC-MPC)
- **The first four of the above AMPs provided the basis for development of the pre-application inspection procedure which was implemented at Maine Yankee**

NAC-MPC/NAC-UMS CoC Renewal Project
Work Done Since First Pre-Submittal Meeting

- **Development of Proposed NAC AMPs**
  - A-1 Aging Management Program for Localized Corrosion and Stress Corrosion Cracking (SCC) of Welded Stainless-Steel Transportable Storage Canisters (TSCs)

1. Scope of AMP follows Table 6-2 of MAPS in that the readily accessible external surfaces of the TSC are inspected for atmospheric deposits, localized corrosion, and SCC. General visual examination of accessible surfaces; VT-3 examination of welds and heat affected zones (HAZs) only
2. A general inspection of the base metal of TSC and structural/closure lids (e.g., non-welded and non-HAZ areas) using direct and/or remote means for atmospheric deposits, general condition and localized corrosion
3. Visual examinations (VT-3) using remote means of 100% of accessible areas of TSC longitudinal and circumferential welds and HAZs (50 mm on each side of weld deposit). VT-1 used, as required, to evaluate areas where major indications are identified on or near a shell weld
4. Acceptance criteria based on EPRI Aging Management Guideline Report No. 3002008193
5. Sample size is minimum of one (1) bounding TSC at sites evaluated as required to perform inspections
6. Frequency is every 10 years without detection of indications of corrosion degradation and every 5 years after detection of major corrosion degradation or detection of cracking

NAC-MPC/NAC-UMS CoC Renewal Project
Work Done Since First Pre-Submittal Meeting

- **Development of Proposed NAC AMPs**
  - A-2 Aging Management Program for Internal Vertical Concrete Cask (VCC) Metallic Components Monitoring

1. Scope of AMP follows the sheltered internal component inspections of Table 6-4 of MAPS in that during internal remote examinations of a TSC, a general visual inspection using direct observation or remote means of a target of 80% of readily accessible VCC internal metallic steel surfaces is performed
2. The general visual inspection scope is to observe for and identify areas of localized corrosion/pitting, atmospheric deposits, and general condition of the VCC internal metallic components
3. Areas/surfaces inspected include the underside of the VCC lid, VCC top flange surfaces, VCC shield plug, accessible portions VCC liner and baseplate, accessible portions of baffle weldment, and inlet and outlet components
4. Acceptance criteria for the visual inspection include no obvious loss of base metal caused by localized corrosion pits and crevice corrosion beyond general corrosion, no indication of displaced parts, no blockage of inlet/outlet vents exceeding design bases, no indication of damaged bolts or bolt holes
5. The specified general visual inspection is performed whenever a VCC is accessed for a TSC inspection performed per A-1 AMP
6. Note that general corrosion of the VCC internal metallic components has been evaluated in a TLAA included in the CoC renewal application and VCC coatings are categorized as NITS.

NAC-MPC/NAC-UMS CoC Renewal Project
Work Done Since First Pre-Submittal Meeting

- **Development of Proposed NAC AMPs**
  - A-3 Aging Management Program for External Vertical Concrete Cask (VCC) Metallic Components Monitoring

1. Scope of AMP follows the external metallic components directly exposed to outdoor air inspections of Table 6-4 of MAPS. The general visual inspection scope of 100% of normally accessible surfaces is to observe for and identify areas of general and localized corrosion, wear, pitting, atmospheric deposits, and general condition of the VCC external metallic components
2. Areas/surfaces inspected includes the top surface of the VCC lid, accessible top surfaces of the VCC top flange, exposed external surfaces of inlet/outlet vents including condition of vent screens and attachments, exposed VCC baseplate surfaces, VCC lifting lug components and associated bolting (if installed).
3. Direct general visual inspections are performed utilizing personnel and examination requirements approved by the general-licensee.
4. Acceptance criteria for the visual inspection include no obvious loss of base metal caused by general corrosion, localized corrosion pits and crevice corrosion, excessive red-orange colored corrosion on base metal, coatings or concrete, no indication of displaced parts, or loose bolting.
5. The frequency of the general visual inspection is once every five years. The A-3 AMP will replace and supersede the currently FSAR specified annual VCC external inspections
6. Note that the A-3 visual examination will be performed in conjunction with performance of the general visual inspection of the VCC in accordance with the A-4 AMP.

NAC-MPC/NAC-UMS CoC Renewal Project
Work Done Since First Pre-Submittal Meeting

- **Development of Proposed NAC AMPs**

➢ A-4 Aging Management Program for NAC Reinforced Vertical Concrete Cask (VCC) Structures

1. Scope of proposed AMP follows the Reinforced Concrete Structures inspection scope of above-grade structures of Table 6-3 of MAPS.

2. A general visual inspection by direct observation of the above-grade VCC concrete structure to manage the effects of aging of concrete surfaces exposed to outdoor air.

3. Scope of inspection includes normally accessible external VCC surfaces is to observe for and identify the following aging effects: cracking or loss of material due to freeze/thaw; cracking loss of material and strength due to aggressive chemical attack; cracking loss of strength due to reaction with aggregates; cracking, loss of material and strength due to corrosion of embedded steel; increase in porosity; loss of strength due to leaching of calcium hydroxide; cracking due to differential settlement; loss of material due to salt scaling.

4. Areas/surfaces inspected includes the top and side surfaces of the VCC, and steel-to-concrete interfaces

5. Direct general visual inspections are performed utilizing personnel and examination requirements approved by the general-licensee.

6. Acceptance criteria for the visual inspection are in accordance with ACI 349.3R-02 and visual inspection to be performed by inspectors qualified by the general-licensee. Inspection equipment to include feeler gauges, crack comparators and other suitable quantification methods per the acceptance criteria of ACI 349.3R-02

7. The frequency of the general visual inspection is once every five years. The A-4 AMP will replace and supersede the currently FSAR specified annual VCC external inspections

8. Note that the A-4 visual examination will be performed in conjunction with performance of the general visual monitoring of the VCC external metallic components in accordance with the A-3 AMP.

NAC-MPC/NAC-UMS CoC Renewal Project
Work Done Since First Pre-Submittal Meeting

NAC INTERNATIONAL

- **Development of Proposed NAC AMPs**

  - A-5 Aging Management Program for Transfer Cask (TFRs) and Transfer Adapters

1. Scope of proposed AMP follows the inspection scope of the Table 6-7 AMP for Transfer Casks of MAPS.
2. A general visual inspection by direct observation is performed on the accessible internal and external surfaces of steel TFRs and Transfer Adapters that are exposed to outdoor and indoor air environments.
3. The AMP monitors the condition of internal and external steel surfaces to identify general, pitting, crevice and galvanic corrosion, and wear. The inspections include observing for visual evidence of surface discontinuities and imperfections indicative of corrosion, visual indications of coating degradation indicative of corrosion of the base material, and inspection of trunnion surfaces for presence of cracks.
4. Areas/surfaces inspected includes 100% of the normally accessible TFR/Transfer Adapter surfaces including the TFR exterior. TFR interior cavity, retaining ring and bolting, shield door rails, and shield doors. Dye penetrant examinations of trunnion surfaces will be inspected for the presence of fatigue cracks with acceptance criteria in accordance with ASME Code, Section III, Subsection NF, NF-5350.
5. Direct general visual inspections and dye penetrant examinations are performed utilizing personnel and examination requirements approved by the general-licensee.
6. Acceptance criteria for the visual inspection are no obvious loss of material from the base metal, including uniform wall thinning, localized corrosion pits, crevice corrosion and wear scratches/gouges; excessive red-orange colored corrosion products on the base metal or coatings; no large areas of coating defects; and no fatigue cracking of the trunnions.
7. The frequency of the general visual inspection is once every five years while the TFR/Transfer Adapter is in use or within one year prior to returning the TFR/Transfer Adapter to service. During normal operating periods, annual inspections per ANSI N14.6 will be performed.
8. This AMP applies to general-licensees who have a TFR/Transfer Adapter on site and available for service.

NAC-MPC/NAC-UMS CoC Renewal Project
Work Done Since First Pre-Submittal Meeting

- **Pre-application Inspection No. 2 at Maine Yankee**
  - Preparations--January – June 2018
  - Conducted Inspection –July 2018
  - Developed Inspection Report—August/September 2018
- **3 Yankees Presentation**
  - Paul Plante, 3 Yankees Relicensing Manager
  - Neil Fales, 3 Yankees Aging Management Programs Manager

NUTUG PRE-APPLICATION INSPECTION OF THE NAC UMS AND MPC SYSTEMS AT MAINE YANKEE

Paul Plante, Neil Fales
Connecticut Yankee/Maine Yankee/Yankee Rowe
on behalf of the NAC Utility Technology User's Group

NUTUG Site Selection Attributes

- Maine Yankee has bounding candidate casks:

Site	Marine Shore Distance (kM)	Z_{ISFSI}	V_{CAN} Range	Oldest Cask Age (2018)
Maine Yankee	10	1	4-5	16
Yankee Rowe	160	1	5	16
Palo Verde 1, 2 & 3	210	1	4-5	15
Haddam Neck	23	1	4-5	14
McGuire 1 & 2	270	1	4	14
Catawba 1 & 2	250	1	4	11
Dairyland LACBWR	>1,000	1	5	6

Maine Yankee Today

Typical Vertical Concrete Cask

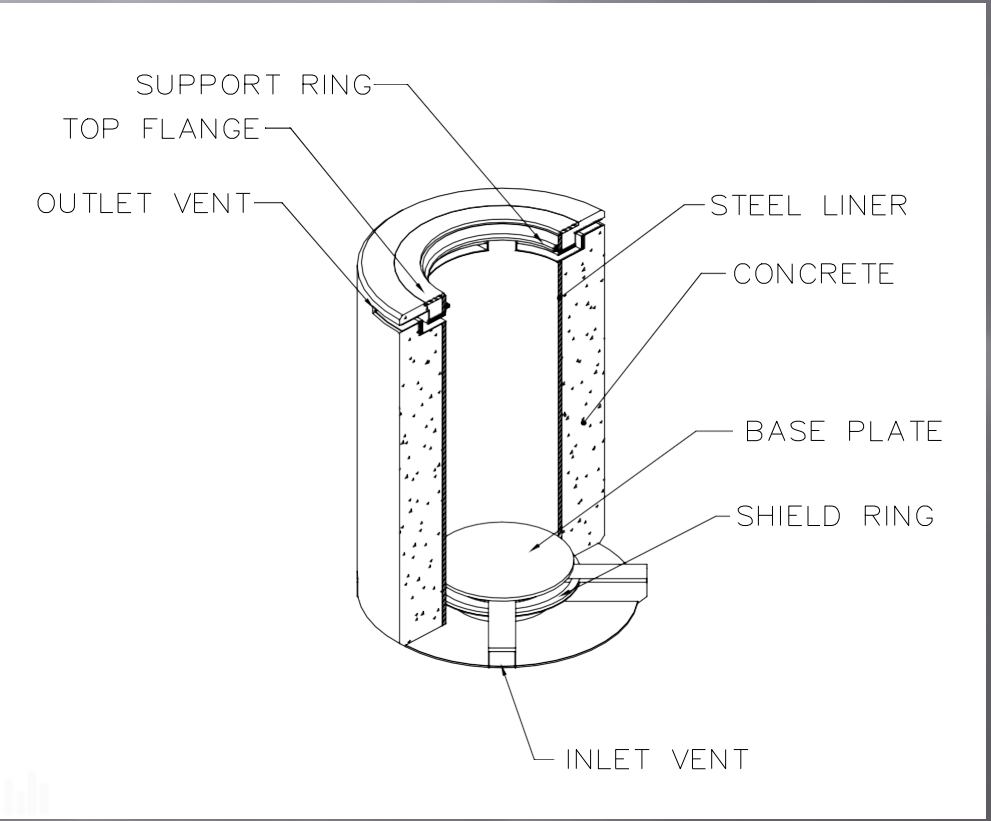

Maine Yankee Transportable Storage Canister

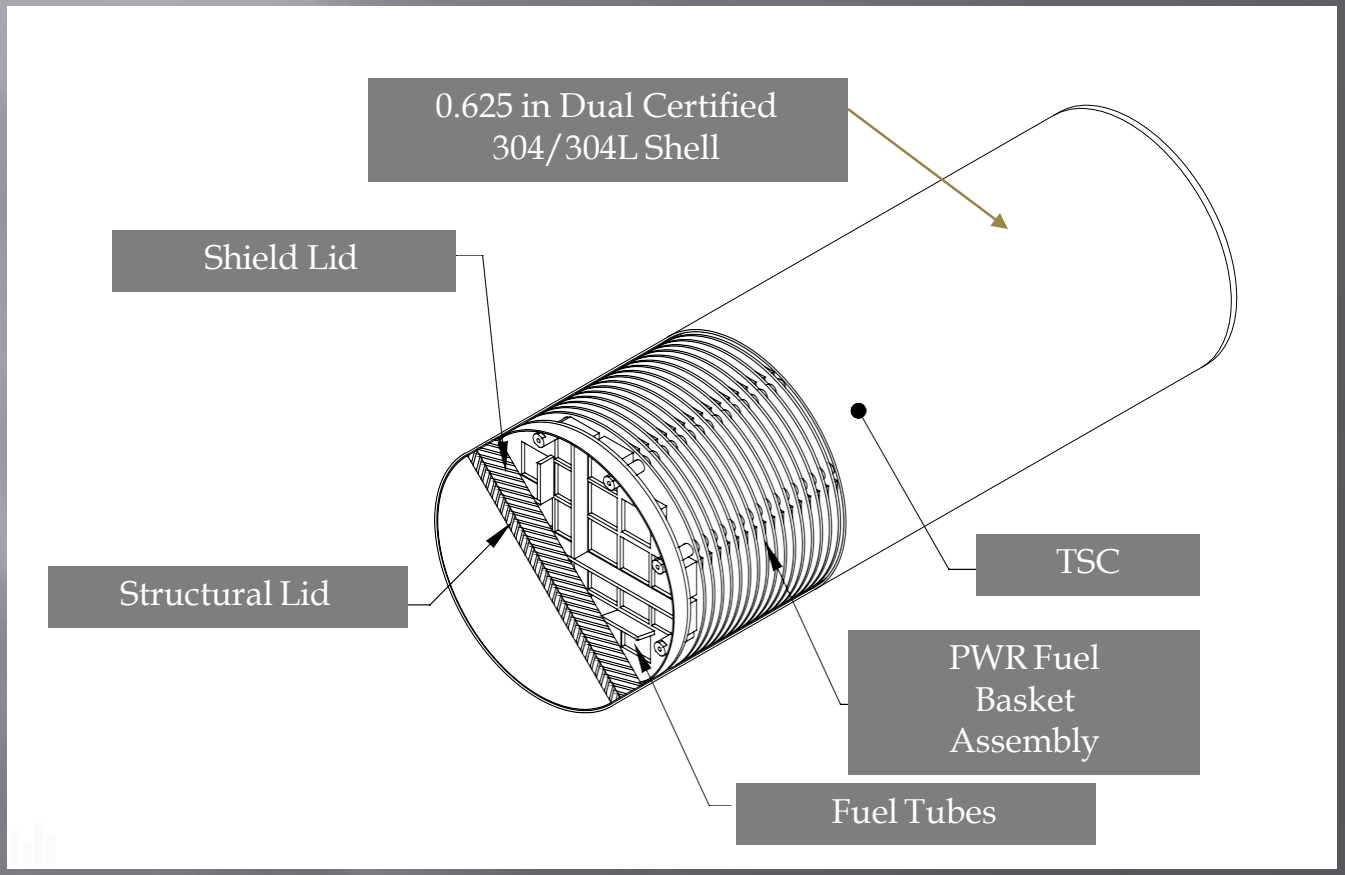

Setup for Pre-Application Inspection

2018 VCC Lid Off-Shield Plug On

Top of TSC 22

Inspecting The Closure Weld

Inspection Through the Outlet Vents

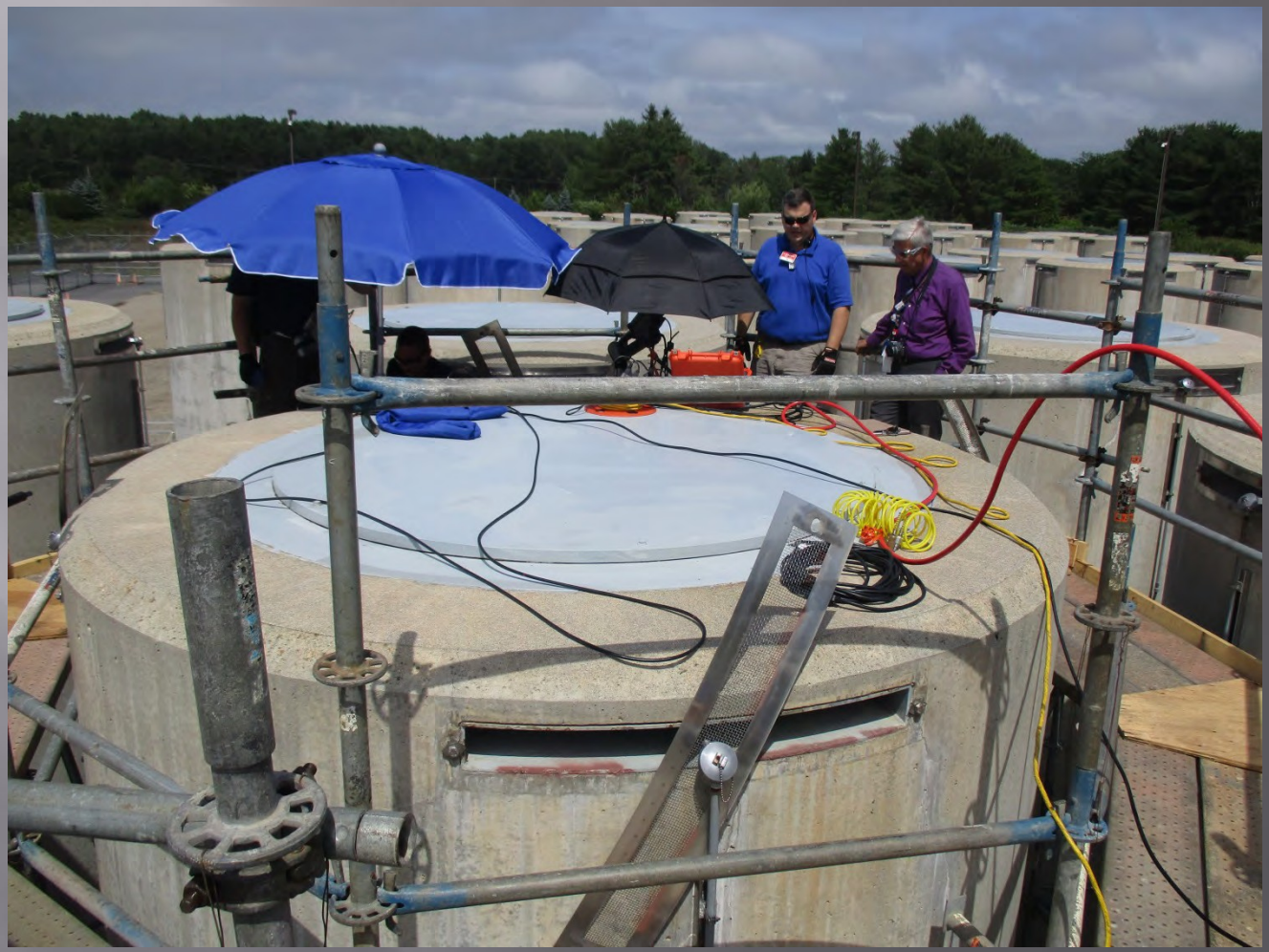

Canister Inspection Approach

- The ROV was fitted with a boroscope camera for inspections.
- It can traverse 90° turns for navigating through the inlet and outlet vents and is driven by magnetic wheels for vertical runs on carbon steel surfaces.

View down the VCC/TSC Annulus

Coating Damage VCC Liner

Chemistry Sampling Top of TSC 22

Surface Salt Measurements Inside Two Maine Yankee VCC's

Sample	Elcometer Reading	Chloride		Nitrogen/Nitrate		Sulfate	
		Measured	Loading	Measured	Loading	Measured	Loading
1 (Top of TSC22 - Very Dusty)	2.9 µg/cm^2	308 µg	32 mg/m^2	124 µg	13 mg/m^2	456 µg	48 mg/m^2
2 (Top of TSC22 - Relatively Clean)	Not Valid	40.8 µg	4.3 mg/m^2	12 µg	13 mg/m^2	ND	N/A
3 (Top of TSC22 - Most Dusty)	6.3 µg/cm^2	350 µg	37 mg/m^2	159 µg	17 mg/m^2	569 µg	60 mg/m^2
8 (Top of TSC22 - Very Dirty)	N/A	272 µg	Swipe	152 µg	Swipe	768 µg	Swipe
9 (Top of TSC22 - Dirty)	N/A	52.3 µg	Swipe	19.3 µg	Swipe	83.2 µg	Swipe
10 (Top of the Shield Plug-TSC22)	1.1 µg/cm^2	44.2 µg	4.7 mg/m^2	6.3 µg	0.7 mg/m^2	124 µg	13 mg/m^2
SPE-01 (Top of the Shield Plug-2016 TSC2)	0.5 µg/cm^2	28 µg	2.8 mg/m^2	ND	N/A	73.1 µg	7.3 mg/m^2
SPE-02 (Top of the Shield Plug-2016 TSC2)	0.7 µg/cm^2	43 µg	4.3 mg/m^2	2.5 µg	0.2 mg/m^2	107 µg	10.7 mg/m^2

Note: 1 µg/cm^2 = 10 mg/m^2

Robot Crawler with a Temp & Rad Probes Mounted

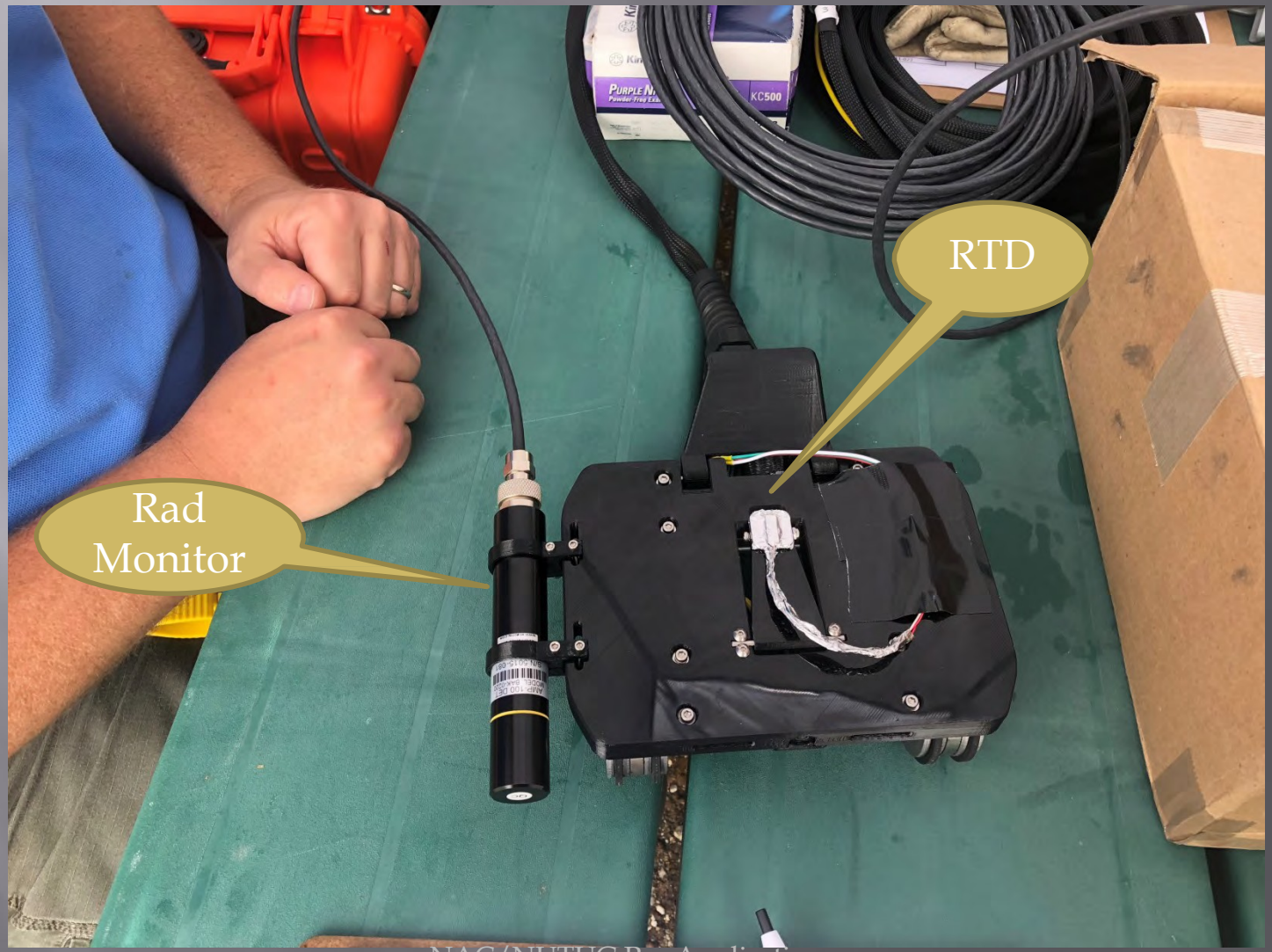

Robot Crawler During Inspection

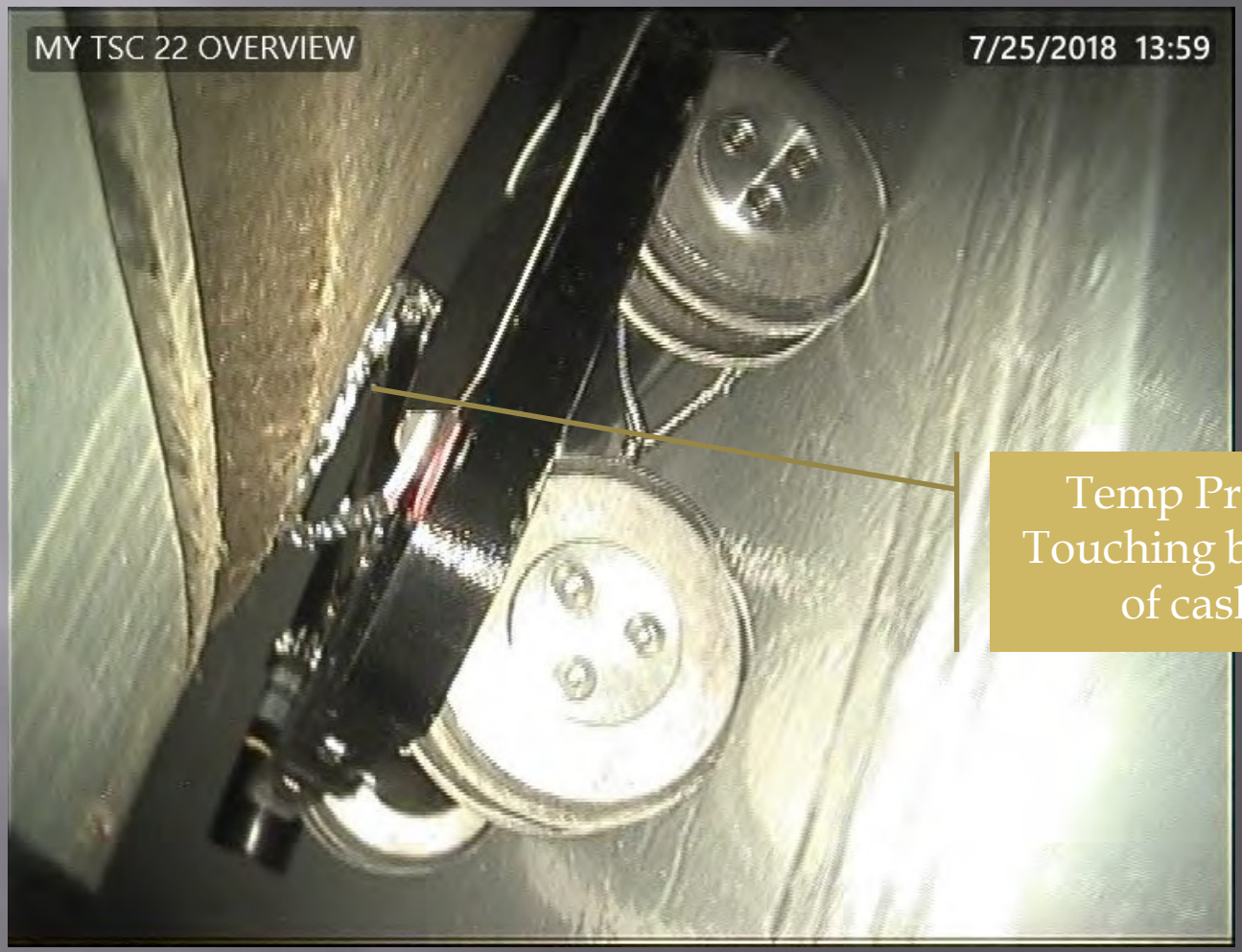

Temp Probe Touching botton of cask

2018 TSC 22 Dose Rate and Temp. Data

7/25/18 Maine Yankee Pre-Application Inspection Temperature/Radiation Data for VCC55/TSC22									
	VCC Outlet Vent Location								Ambient Temperature
	South		East		North		West		AVG = 76.4 °F
Vent Opening (Top)	Temp °F	Rad R/hour	Temp °F	Rad R/hour	Temp °F	Rad R/hour	Temp °F	Rad R/hour	Δ T = 9.4 °F
1'	98	30.85	99	22.1	95	26.4	90	27.22	
2'									
3'									Dose at ID Edge of Outlet Vent
4'	109	308.6	111	202	94.5	204.2	90.6	199.7	
5'									South = 2.3 R/hr
6'									
7'	115	311	116	216.8	91.5	240.5	88	217.8	East = 1.84 R/hr
8'									
9'									North = 2.1 R/hr
10'	109	259.2	109	213.1	86.5	249.3	86	217.8	
11'									West = 3.2 R/hr
12'									
13'									
14' (Bottom above bevel)	87	11.05	87	16.1	[Couldn't touch]	22.4	84.5	14.45	
Radiation Instrument				Temperature Instrument					
Model	Serial Number			Model	Serial Number				
AMP 100	5015-081			Solo 4848	RTT Box 2				
AMP 200	7711-022								

Summary

- Inspection coverage met the desired 80% minimum:
  - Estimated 95%+ on the shell
  - Estimated 85-90% of the shell welds and HAZ's
  - Estimated 95%+ on the VCC liner and interior surfaces

- No areas of concern on the canister. One area of paint deterioration and localized corrosion on the VCC liner which was evaluated using the Maine Yankee Condition Reporting system.

- Salt loading measurements were taken on the top of the TSC and results showed 2.9 – 11.4 $\mu g/cm^2$, depending on technique used.

- Contact temperature measurements were made on the TSC and varied from 84.5 -116 °F (ambient 76.4 °F)

- Dose rates on the TSC varied from 11.05 – 311 R/hr, depending on location.

- Canister appeared to be dry on very humid, summer days.

- **NAC-MPC and NAC-UMS CoC templates:**
  - Incorporated client comments received through December 2018 on drafts of NAC-MPC and NAC-UMS CoC Renewal Applications
  - NAC-MPC CoC Renewal Application is essentially complete (NAC requests NRC feedback on the below format):
    - Chapter 1 – General Information
      - Background Information
      - Application Format and Content
      - Applicant Information
      - References

- **NAC-MPC and NAC-UMS CoC templates:**
  - NAC-MPC CoC Renewal Application format (cont'd):
    - Chapter 2 – Scoping Evaluation
      - Introduction
      - Scoping Methodology
      - Scoping Results
      - Description of SSCs and Identification of Intended Function
      - SSC within Scope of CoC Renewal Application
      - SSC not within Scope of CoC Renewal Application

- **NAC-MPC and NAC-UMS CoC templates:**
  - NAC-MPC CoC Renewal Application format (cont'd):
    - Chapter 3 – Aging Management Reviews
      - Identification of SSC Materials and Environments
      - Identification of Aging Effects Requiring Management
      - Time-Limited Aging Analyses (TLAAs)
      - Aging Management Programs (AMPs)
      - Periodic Tollgate Assessments
      - Fuel Retrievability
      - Operating Experience Review and Pre-application Inspection Results
      - Design Basis Document Review
      - References

- **NAC-MPC and NAC-UMS CoC templates:**
  - NAC-MPC CoC Renewal Application format—(cont'd):
    - Appendix A– Aging Management Programs
    - Appendix B--Time-Limited Aging Analyses
    - Appendix C—Updated Safety Analysis Report Supplements and Changes
    - Appendix D—Proposed Changes for the NAC-MPC Certificate of Compliance (CoC) and Technical Specification (TS) Changes
    - Appendix E—Pre-Application Inspection Report
    - Appendix F—Design Basis Document Review Report

Remaining Activities—Calendar Years 2019, 2020

- **Perform final Industry Peer Review and internal technical and editorial reviews of the two applications and address comments (April-October 2019)**
- **Final review and approval to submit application(s)—November 2019 NUTUG Meeting**
- **Submit the final NAC-MPC CoC Renewal Application by December 2019**
- **Submit the final NAC-UMS CoC Renewal Application by September 2020**
  - NAC requests feedback from NRC on the plan to submit the two packages at separate times

Questions?

www.nacintl.com

Eric Shewbridge
Project Manager
Phone: 678-328-1245
Mobile: 404-403-8521
Email: eshewbridge@nacintl.com

Visit us at www.nacintl.com