Enclosure:

"ACRS Presentation: Chapter 4, Reactor Overview," PM-0419-65096, Revision 0

NuScale Power, LLC
1100 NE Circle Blvd., Suite 200 Corvallis, Oregon 97330 Office 541.360-0500 Fax 541.207.3928
www.nuscalepower.com

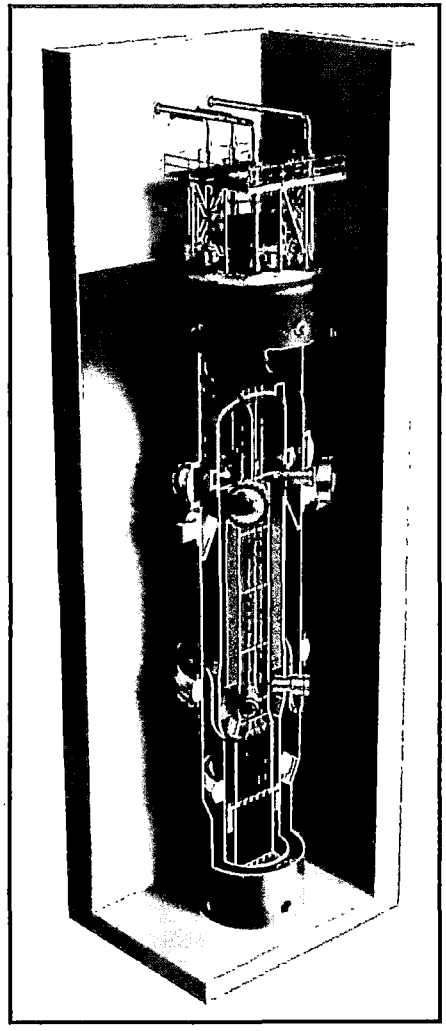

ACRS Presentation: NuScale Chapter 4, Reactor Overview

April 17, 2019

PM-0419-65096
Revision: 0

Copyright 2019 by NuScale Power, LLC.

NUSCALE™
Power for all humankind

Template #: 0000-21727-F01 R4

Presentation Team

Larry Linik

Fuels Engineer

Allyson Callaway

Supervisor, Nuclear Analysis

Ken Rooks

Safety Analysis Engineer

Matthew Presson

Licensing Engineer

Copyright 2019 by NuScale Power, LLC.

Chapter 4: Reactor

Section	Title
4.1	Summary Description
4.2	Fuel System Design
4.3	Nuclear Design
4.4	Thermal and Hydraulic Design
4.5	Reactor Materials
4.6	Functional Design of Control Rod Drive System

Copyright 2019 by NuScale Power, LLC.

4.1 – Summary Description

- 160 MW Thermal Integral Natural Circulation PWR
- 37 NuFuelHTP2™ Fuel Assemblies
- 16 Hybrid AIC/B_4C Control Rods

NuScale Reactor Design Parameters	
Key Reactor Parameter	**Value**
Core thermal output (MWt)	160
System pressure (psia)	1850
Inlet temperature (°F)	497
Core average temperature (°F)	543
Average temperature rise in core (°F)	100
Best estimate flow (lb/hr)	4.66E+06
Core bypass flow (%)(best estimate)	7.3
Average linear power density (kw/ft)	2.5
Peak linear power for normal operating conditions (kw/ft)	5
Normal operation peak heat flux (Btu/hr-ft2)	170,088
Total heat flux hot channel factor, FQ	2
Heat transfer area on fuel surface (ft2)	6275.6
Normal operation core average heat flux (Btu/hr-ft2)	85,044
Core flow area (ft2)	9.79
Core average coolant velocity (ft/sec)	2.7

Copyright 2019 by NuScale Power, LLC.

4.2 – Summary Description

- NuScale design based on Framatome's proven US 17x17 PWR Technology
- Over 1500 17x17 HTP fuel assemblies with maximum burnup of 54 GWd/mTU
- NuScale design features:
  - Zircaloy-4 HTP™ upper and intermediate spacer grids
  - Inconel 718 HMP™ lower spacer grid
  - Coarse-mesh filter plate on bottom nozzle
  - Zircaloy-4 MONOBLOC™ guide tubes
  - Quick-disconnect top nozzle
  - Alloy M5® fuel rod cladding

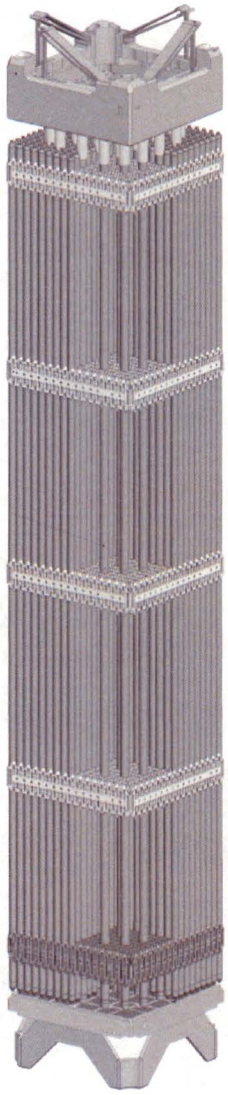

Copyright 2019 by NuScale Power, LLC.

4.2 – Fuel Assembly Design

- 17x17 HTP™ Spacer Grid Design
  - Zircaloy-4 strip
  - Proven Grid-to-Rod-Fretting (GTRF) resistance across many US PWRs
  - Multiple (8) line contacts on each fuel rod
  - Flow channels to promote flow mixing

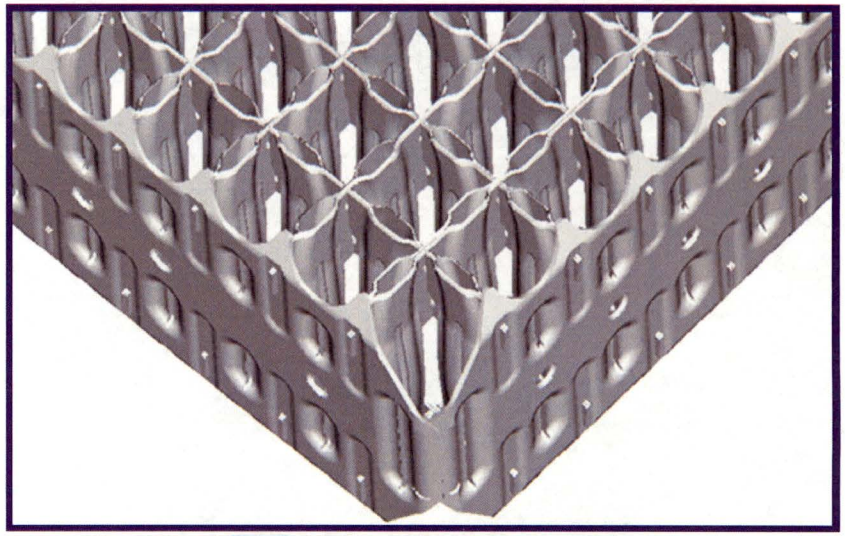

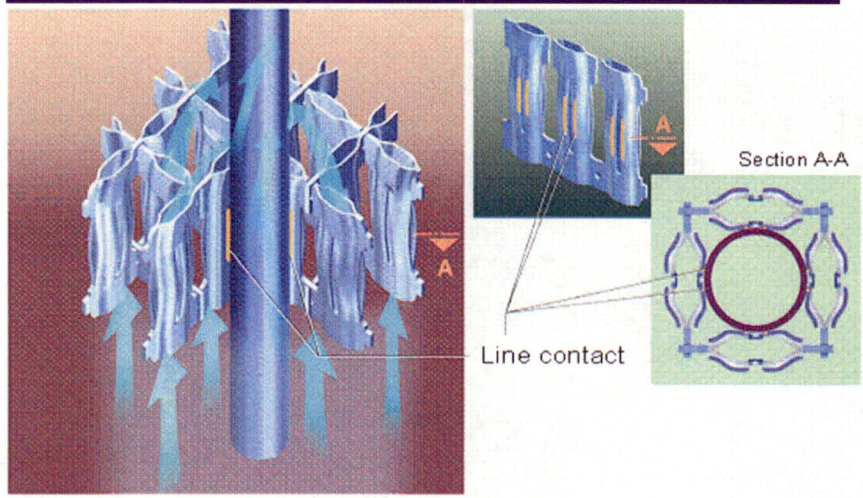

Copyright 2019 by NuScale Power, LLC.

4.2 – Fuel Assembly Design

- 17x17 HMP™ Spacer Grid Design
  - Alloy 718 strip
  - Similar construction to HTP spacer grids
  - Straight channels

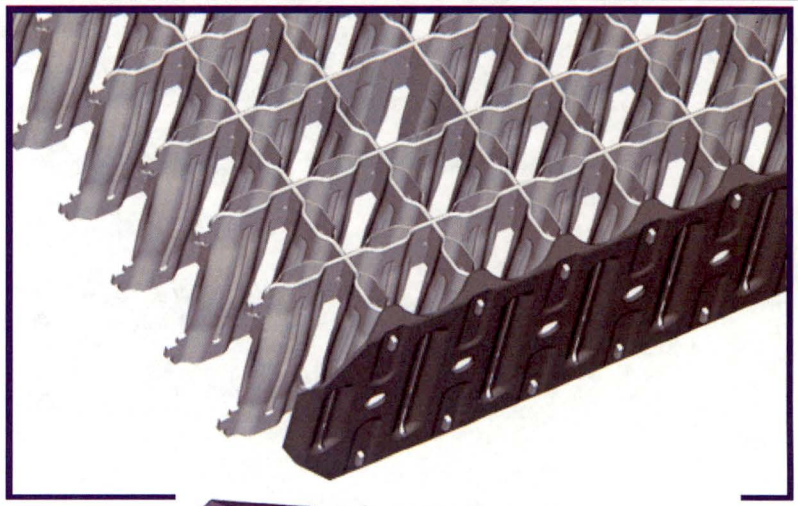

- Coarse Mesh Bottom Nozzle
  - 304 ss Frame
  - Alloy 286 Filter plate (for debris capture)
  - Use in several US 17x17 PWR plants with no debris failures

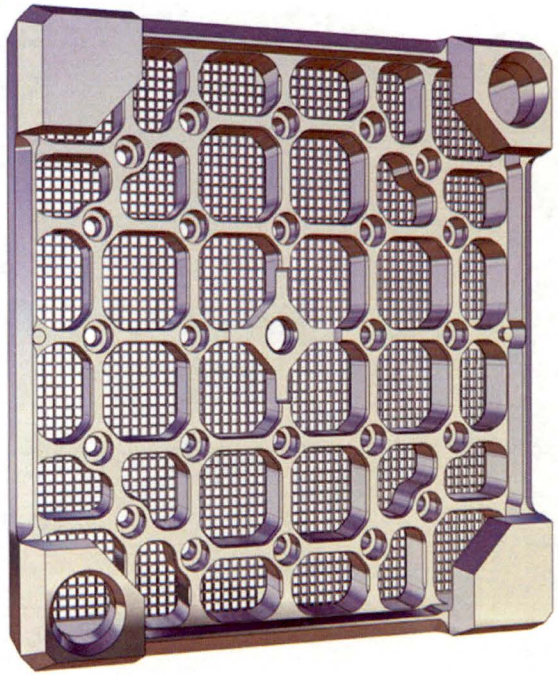

Copyright 2019 by NuScale Power, LLC.

4.2 – Design Basis

TR-0116-20825-P-A, Rev. 1, *Applicability of AREVA Fuel Methodology for the NuScale Design*

SRP Criteria Review Summary		
Analysis	SRP 4.2 Acceptance Criteria	Framatome Topical Report
Shipping And Handling Stress Analysis	1.A.i	EMF-92-116(P)(A)
Fuel Assembly/Component Stress Analysis	1.A.i	
FIV Assessment	1.A.iii	
Axial Growth (Rod and Assembly)	1.A.v	
Fuel Lift Analysis	1.A.vii	
Internal Hydriding	1.B.i	
Clad Stress Analysis	1.A.i	BAW-10227P-A
Fuel Rod Buckling Analysis	1.A.i	
Clad Fatigue Analysis	1.A.ii	
Clad Corrosion Analysis	1.A.iv	BAW-10231P-A
Fuel Rod Internal Pressure	1.A.vi	
Fuel Centerline Melt Analysis	1.B.iv	
Transient Clad Strain Analysis	1.B.vi	
Clad Creep Collapse Analysis	1.B.ii	BAW-10084P-A BAW-10227P-A
Rod Bow Evaluation	1.A.v	XN-75-32(P)(A)

Copyright 2019 by NuScale Power, LLC.

4.2 – Design Basis

TR-0716-50351-P, Rev. 0, *NuScale Applicability of AREVA Method for the Evaluation of Fuel Assembly Structural Response to Externally Applied Forces*

SRP Criteria Review Summary		
Analysis	SRP 4.2 Acceptance Criteria	Framatome Topical Report
LOCA/Seismic Stress Analysis	Appendix A	ANP-10337P-A

Copyright 2019 by NuScale Power, LLC.

4.2 – Fuel Testing

- BOL/EOL testing to characterize the mechanical response of the fuel assembly for Seismic/LOCA calculations
  - Axial Stiffness Testing
  - Lateral Pluck Testing
  - Lateral Stiffness Testing
  - Forced Vibration testing
  - Vertical Drop testing
- Life and Wear testing
  - 1,000-hour test to characterize the grid to rod fretting performance of the fuel

Copyright 2019 by NuScale Power, LLC.

4.2 – Fuel Testing

- Hydraulic Flow Testing to determine pressure drop and lift characteristics
  - Flow Lift Testing
  - Pressure Drop Coefficient Testing
- Mechanical testing of bottom nozzle
  - Develop load/deflection data to determine load limits

Copyright 2019 by NuScale Power, LLC.

4.2 – Control Rod Design

- CRA design based on Framatome's proven US 17x17 PWR Technology
  - Hybrid design – B_4C and AIC absorbers
  - 24 control rods with Stainless Steel cladding
  - One-piece cast stainless steel spider
  - Standard 17x17 rod configuration
  - Flex joint formed by the combination of the pin, nut, upper end plug and spider boss

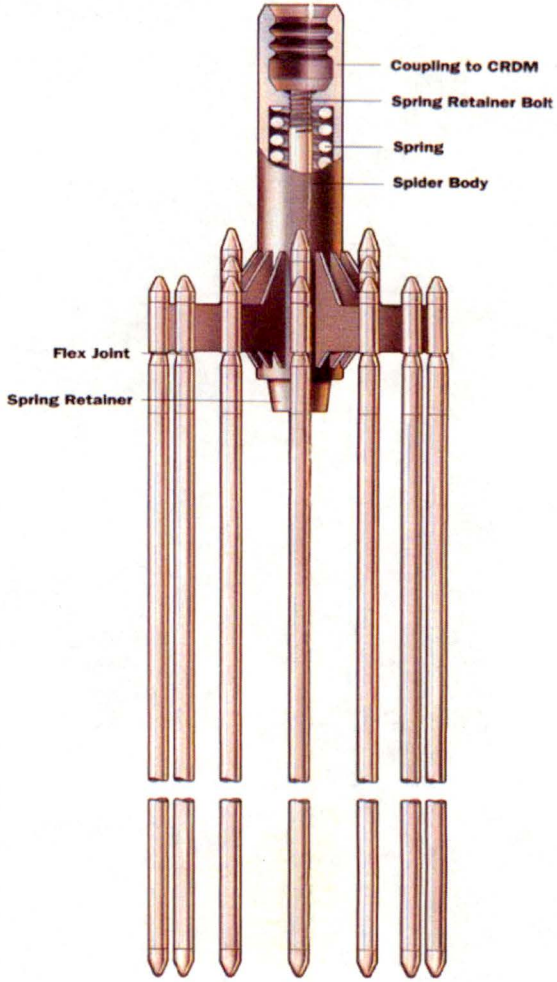

Parameter	Value
CRA total weight (lb)	43
CRA total height (inch)	94.37
Control rod length – short/medium/long (inch)	87.065 / 87.425 / 87.875
Control rod outer diameter (inch)	0.381
Control rod inner diameter (inch)	0.344
Control rod bottom end plug length (inch)	1.913
B4C outer diameter (inch)	0.333
B4C stack length (inch)	62.0
Ag-In-Cd outer diameter (inch)	0.336
Ag-In-Cd stack length (inch)	12.0
Height of CRA spider assembly (inch)	10.387
CRA shaft outer diameter (inch)	1.804

Copyright 2019 by NuScale Power, LLC.

4.2 – Control Rod Design

- CRA Analyses
  - Cladding stress and strain
  - Cladding creep
  - Spider stress due to shipping and SCRAM
  - Absorber melt
  - Rod internal pressure
  - Rod and spider spring loading due to SCRAM and absorber growth

Component	Material
Spider	304L stainless steel
Rod end plugs	308L stainless steel
Cladding	304L stainless steel
Solid spacer, lock pin, nuts, tension bolt	304L stainless steel
Spring retainer	17-4 PH stainless steel
Spider spring	Alloy 718
Control rod plenum spring	302 stainless steel
Absorber materials	80% Ag - 15% In - 5% Cd and B4C
Stack support	Alloy X750

Copyright 2019 by NuScale Power, LLC.

4.2 – Control Testing

- CRA Drop Alignment Test
  - Limiting drop

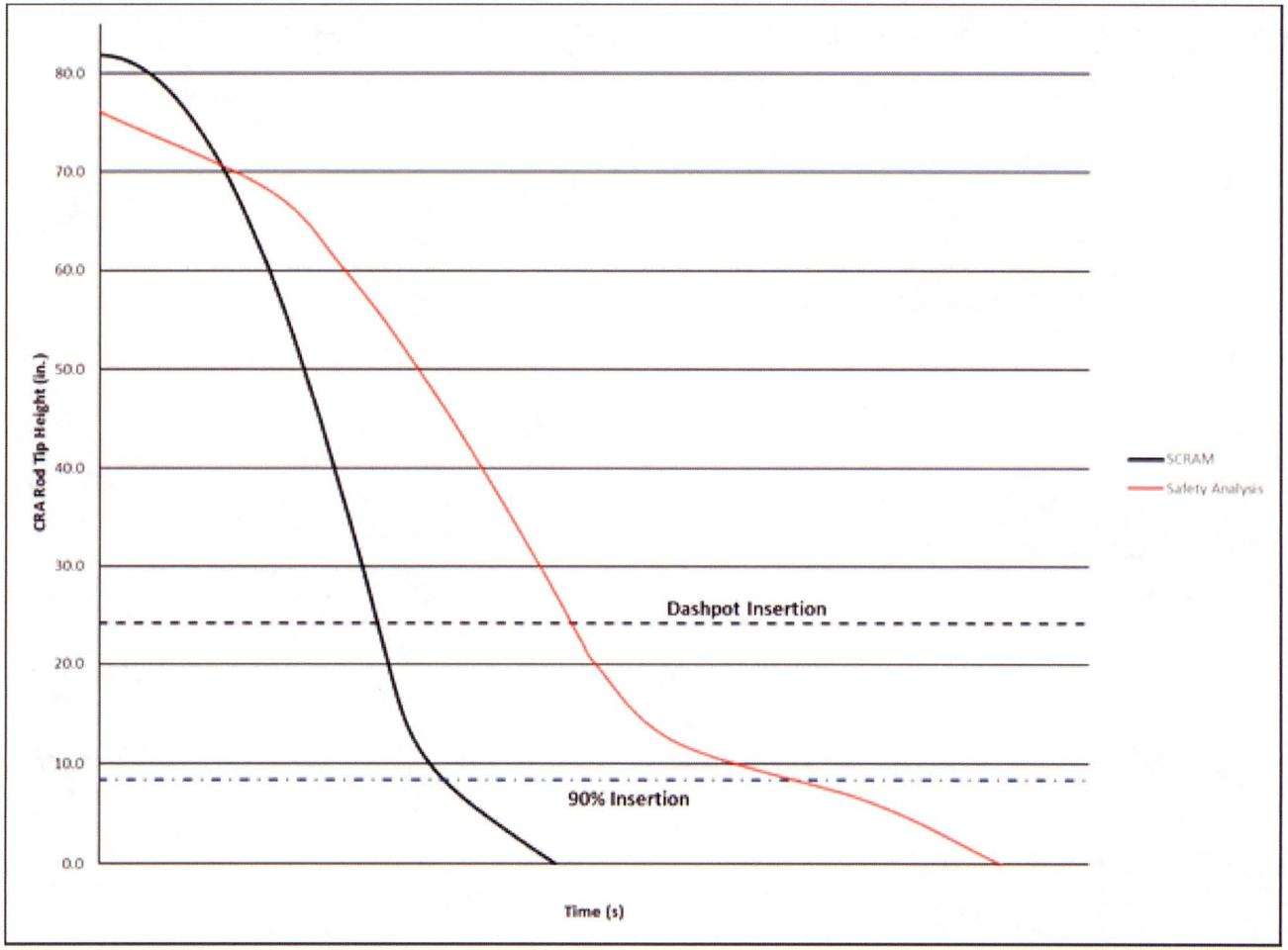

Copyright 2019 by NuScale Power, LLC.

4.2 – Conclusion

- Proven Framatome 17X17 components
- NRC Accepted Framatome codes and methods
- Standard Framatome fuel design, analysis, prototype fabrication, and testing
- Standard CRA design, analysis, and testing
- Both fuel and CRA designs are essentially reduced height versions of current designs

Copyright 2019 by NuScale Power, LLC.

4.3 – Design Basis and Methods

- Core design conforms to NUREG-0800, SRP 4.3 guidance
- Latest version of Studvik's Core Management Suite (CMS5)
  - CASMO5 and SIMULATE5 steady-state neutronics software
  - CMS5 analytical methods for neutronic analysis are approved for use
  - Topical Report TR-0616-48793-P-A "Nuclear Analysis Codes and Methods Qualification"

Copyright 2019 by NuScale Power, LLC.

4.3 – Nuclear Design

- Fuel Cycle Design
  - 2-year, 3-batch cycle
  - Out-to-in fuel shuffle
  - Gadolinia burnable absorber
- Equilibrium Core
  - Reference design and analysis in DCA
  - Equilibrium core design is representative; used for demonstration of methods
  - Limits placed on this core design are applied to the design of all cycles
  - Initial, transition, and equilibrium cycles must meet analyzed limits

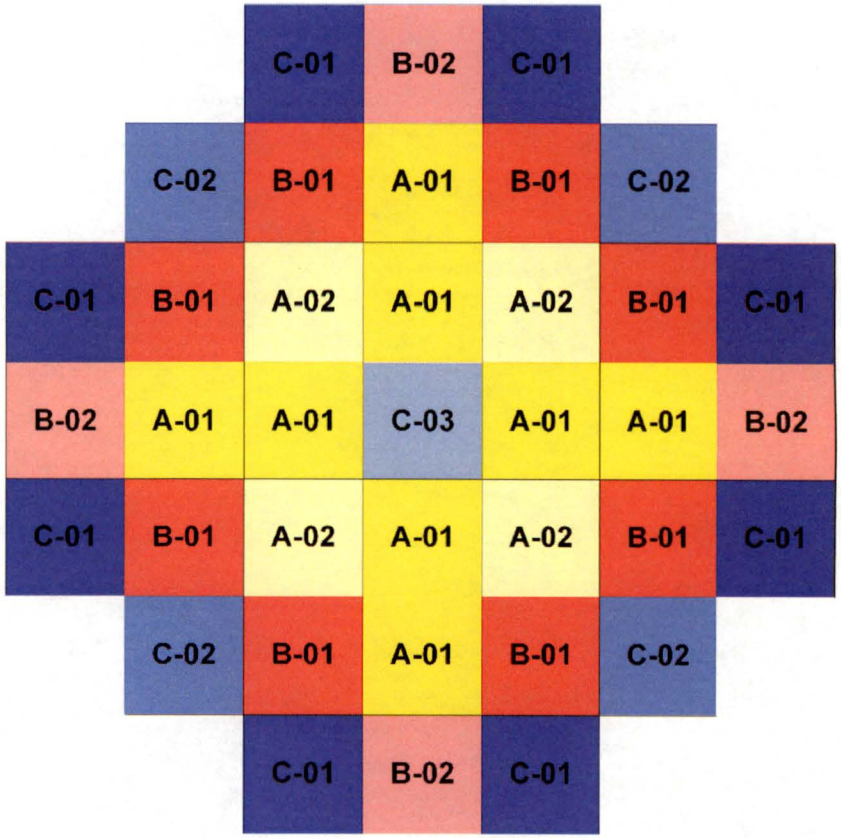

A-01: Batch A Type 1, 4.05 wt% ^{235}U
A-02: Batch A Type 2, 4.55 wt% ^{235}U, with Gadolinia
B-01: Batch B Type 1, 4.05 wt% ^{235}U
B-02: Batch B Type 2, 4.55 wt% ^{235}U, with Gadolinia
C-01: Batch C Type 1, 4.05 wt% ^{235}U
C-02: Batch C Type 2, 4.55 wt% ^{235}U, with Gadolinia
C-03: Batch C Type 3, 2.60 wt% ^{235}U
A – Twice burned, B – Once burned, C – Fresh

Copyright 2019 by NuScale Power, LLC.

4.3 – Core Design Limits

- Cycles are designed to meet constraints and requirements
  - Energy output and burnup
  - Enrichment limits, zoning, and gadolinia loading
- Core design limits are verified for each cycle to confirm the safety analysis bases and ensure specified acceptable fuel design limits (SAFDLs) are not exceeded
  - Moderator temperature and Doppler reactivity coefficients
  - Kinetics parameters
  - Critical and refueling boron concentration
  - Axial and radial peaking
  - Shutdown margin and long term shutdown capability
  - Event-specific limits (i.e. power peaking)
- Core design limits are set to ensure that sufficiently conservative values are analyzed

Copyright 2019 by NuScale Power, LLC.

4.3 – Core Power Distributions

- Power distributions are protected by monitoring to ensure that limits are not exceeded during normal operation
- Control rod assemblies (CRAs) are arranged into regulating and shutdown banks
- The power dependent insertion limits (PDILs) and axial offset (AO) window ensure axial and radial peaking are within design limits
- The NuScale power module is stable with respect to axial and radial xenon imbalances due to small core size, H/D ratio

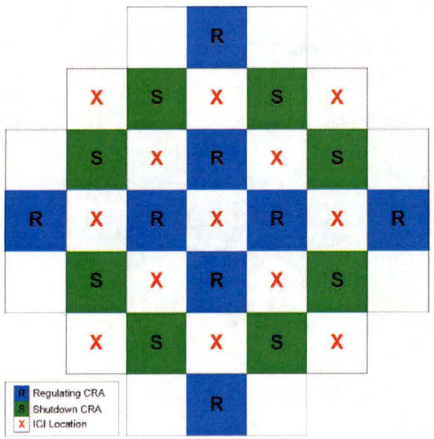

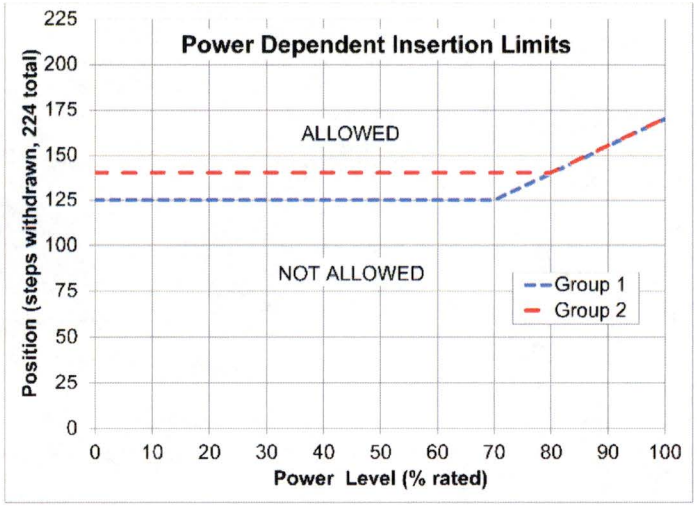

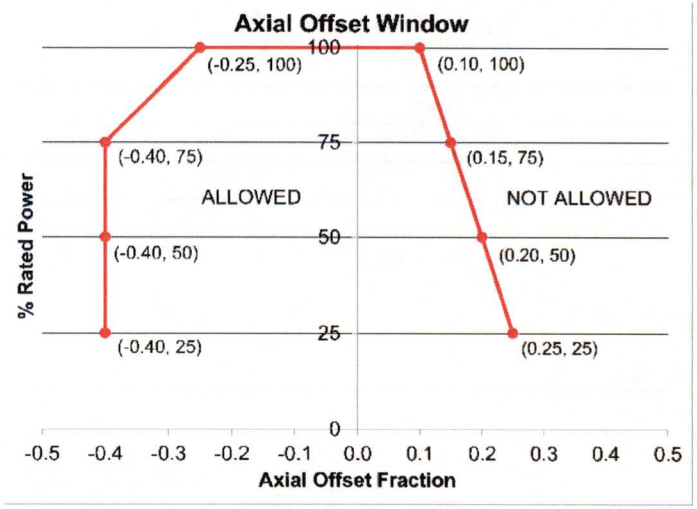

Copyright 2019 by NuScale Power, LLC.

4.3 – Shutdown Margin

- Shutdown Margin (SDM)
  - The instantaneous amount of reactivity by which the reactor is subcritical, or would be subcritical from its present condition, assuming all CRAs are fully inserted with the worst CRA assumed stuck out of the core.
  - Power defect, temperature defect to hot zero power, margin for uncertainties, WRSO, no boration
- Long Term Shutdown (LTSD)
  - The instantaneous amount of reactivity by which the reactor is subcritical, or would be subcritical from its present condition, assuming all CRAs are fully inserted and the RCS is cooled to equilibrium conditions.
  - Power defect, temperature defect to pool temperature, margin for uncertainties, all rods in, no boration
- Distinct definitions for SDM and LTSD establish the design basis and satisfy GDC 26 and PDC 27
  - Acceptability of design basis is demonstrated in DCA Chapter 15 analyses

Copyright 2019 by NuScale Power, LLC.

4.4 - Thermal and Hydraulic Design

Parameter	Basis	Limit / Protection
Critical heat flux	95/95 criteria that hot rod avoids boiling transition	SL 2.1.1.1
Fuel temperature	Fuel centerline temperature remains below melting limit	SL 2.1.1.2
Reactor core coolant flow	Primary system flow remains within ranges assumed in the safety analysis	TS 3.4.1
Hydrodynamic stability	Normal operation and AOOs do not lead to instability	Module protection system analytical limits prevent loss of subcooling and instability

Acceptance criteria ensure GDC 10 and 12 compliance

Copyright 2019 by NuScale Power, LLC.

4.4 - NuScale Design Fuel and Core Conditions

Parameter	NuScale Design
Avg. Fuel Rod Linear Heat Generation Rate	2.5 kW/ft
Peak Fuel Temperature (cycle beginning)	1620 ºF
Core Inlet Mass Flux	0.4 Mlb/hr-ft^2
Core Inlet Subcooling	135 ºF
Core Exit Subcooling	25 ºF
Core Exit Void Fraction	0.0
Hot Channel Exit Thermodynamic Quality	0.05

Nominal core average exit conditions similar to traditional PWRs

Copyright 2019 by NuScale Power, LLC.

4.4 - Evaluation Methods & Implementation

- **CHF and fuel temperature**
  - Methodology topical reports:

TR-0915-17564-P-A *Subchannel Analysis Methodology*	TR-0116-21012-P-A *NuScale Power Critical Heat Flux Correlations*	TR-0716-50350 [*in review*] *Rod Ejection Accident Methodology*

  - VIPRE-01 used to calculate reactor core flow and enthalpy distribution
    - Assess thermal margin to CHF for normal operations and most DBEs to support FSAR Chapter 15
  - Peak linear heat rate using maximum local peaking to assess power margin to fuel melt
  - RCS flow driven by density gradient and system flow resistances
  - Application: FSAR Chapter 15 except 15.6, 15.9
- **Hydrodynamic stability**

Methodology	Software	Implementation
TR-0516-49417 [*in review*]	PIM	15.9

Copyright 2019 by NuScale Power, LLC.

4.4 - CHF Limit and Margin 'Stack-up'

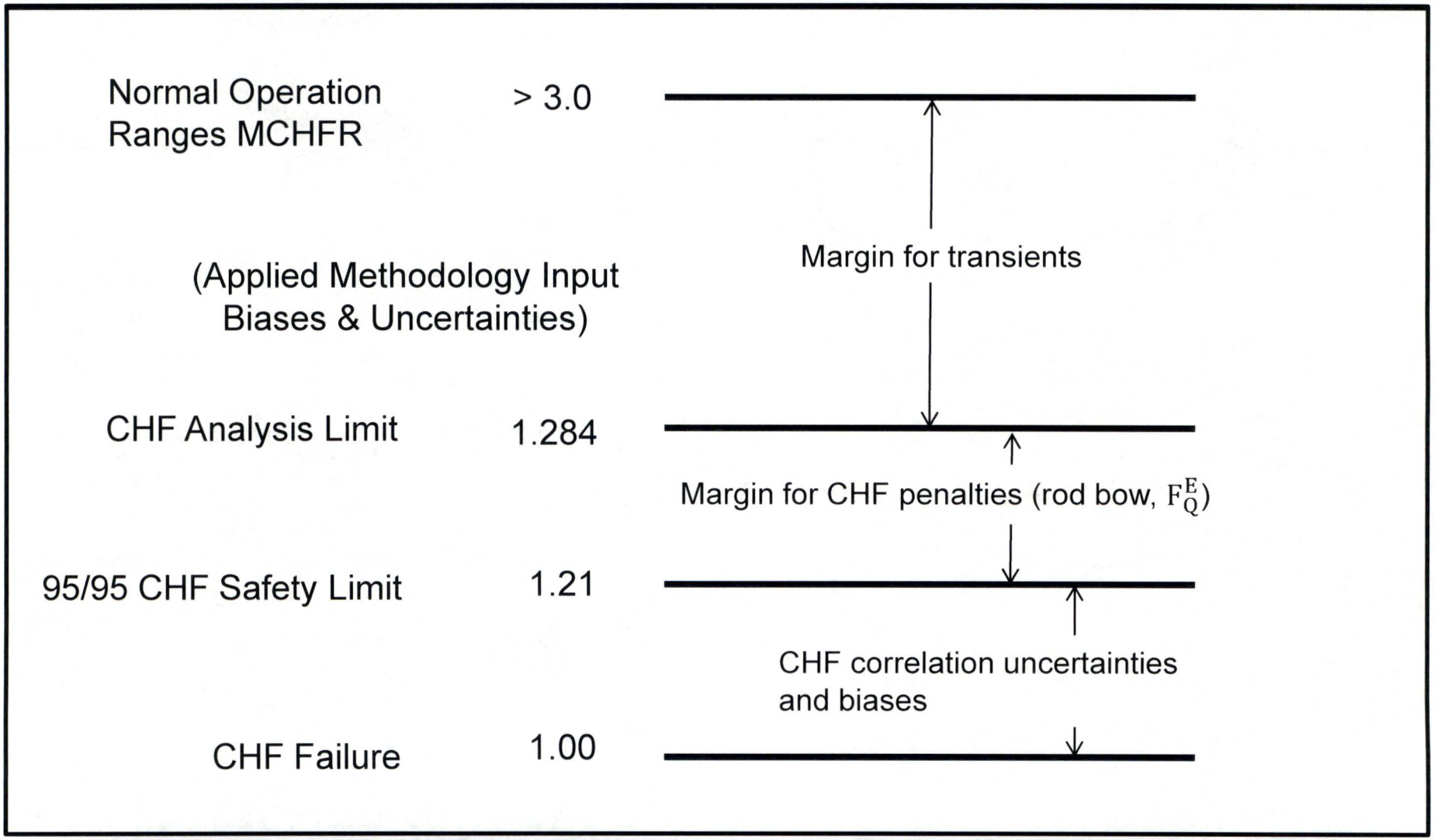

Robust treatment of analytical and design uncertainties

Copyright 2019 by NuScale Power, LLC.

4.4 - Pressure vs. Temperature Operation Map

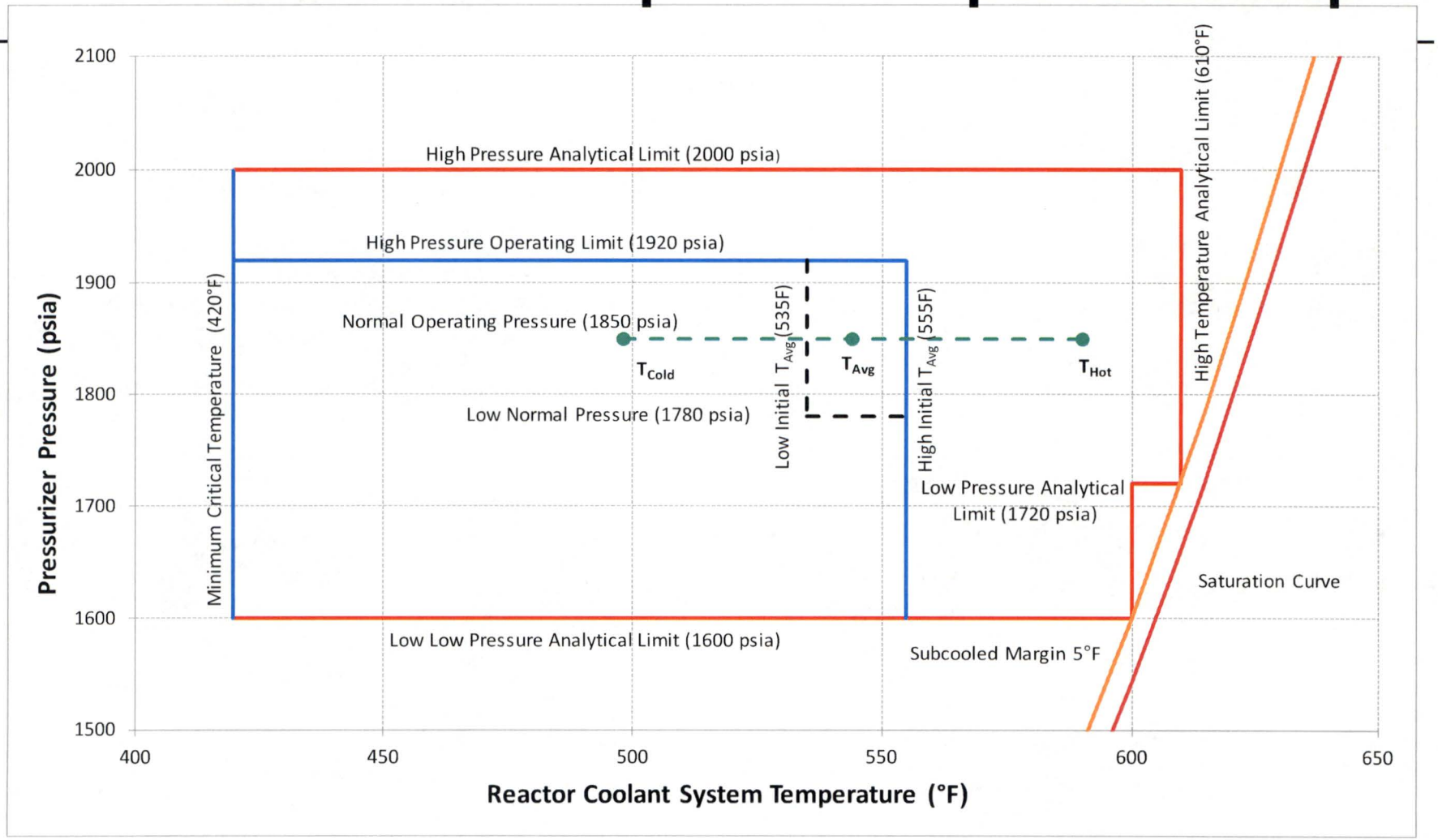

- Module protection system (Ch. 7, red)
- Technical specification LCOs (Ch. 16, blue)

CHF and fuel melting SAFDLs precluded for normal operation & DBEs

Copyright 2019 by NuScale Power, LLC.

4.5.1 – Control Rod Drive System Materials

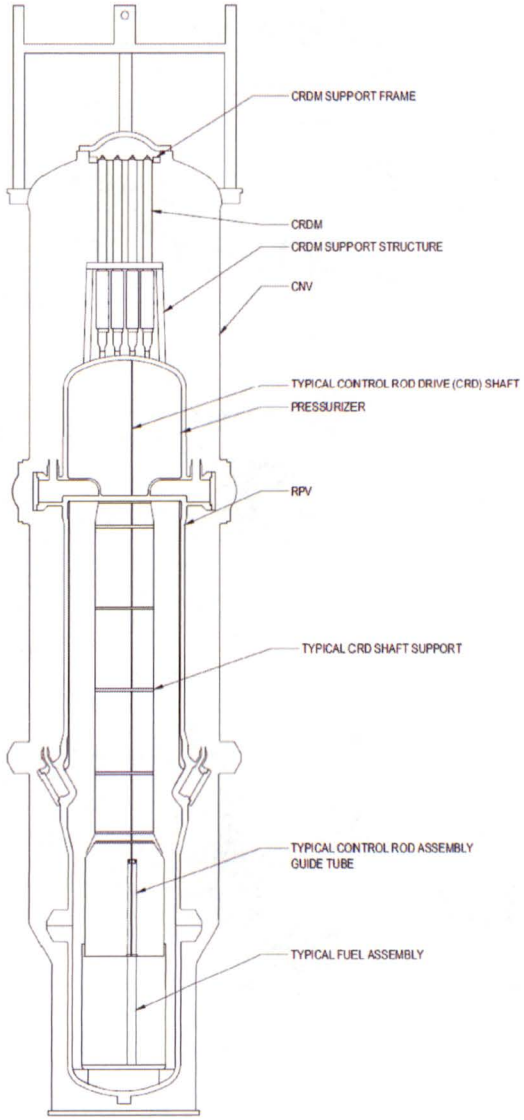

- All pressure boundary materials are designed in accordance with ASME Code
- Pressure boundary materials
  - Austenitic stainless steel materials as addressed in Tier 2, Section 5.2.3 and RG 1.44 Revision 1, with corresponding weld materials
- Non-pressure boundary materials
  - Austenitic & martensitic stainless steels, nickel-base materials
  - Cobalt-based materials are used in a very small portion where alternate material will not perform satisfactorily.

Components and materials are consistent with those for existing, proven designs

Copyright 2019 by NuScale Power, LLC.

4.5.2 – Reactor Internals and Core Support Structure Materials

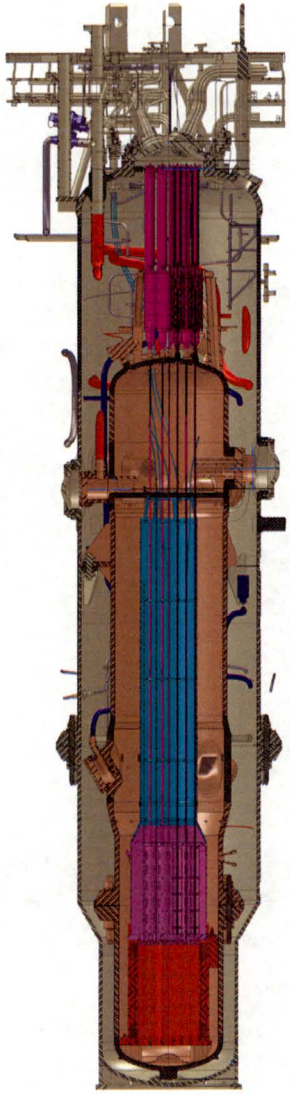

- Materials are selected based on compatibility with their environment
- Components are considered for peak neutron fluence and evaluated using Electric Power Research Institute (EPRI) materials reliability program criteria
- Parts exposed to reactor coolant are made of corrosion resistant material
  - Made mostly of austenitic stainless steel, some nickel-base materials and limited cobalt base materials

Components and materials are consistent with those for existing, proven designs

Copyright 2019 by NuScale Power, LLC.

4.6.1 Description of the Control Rod Drive System

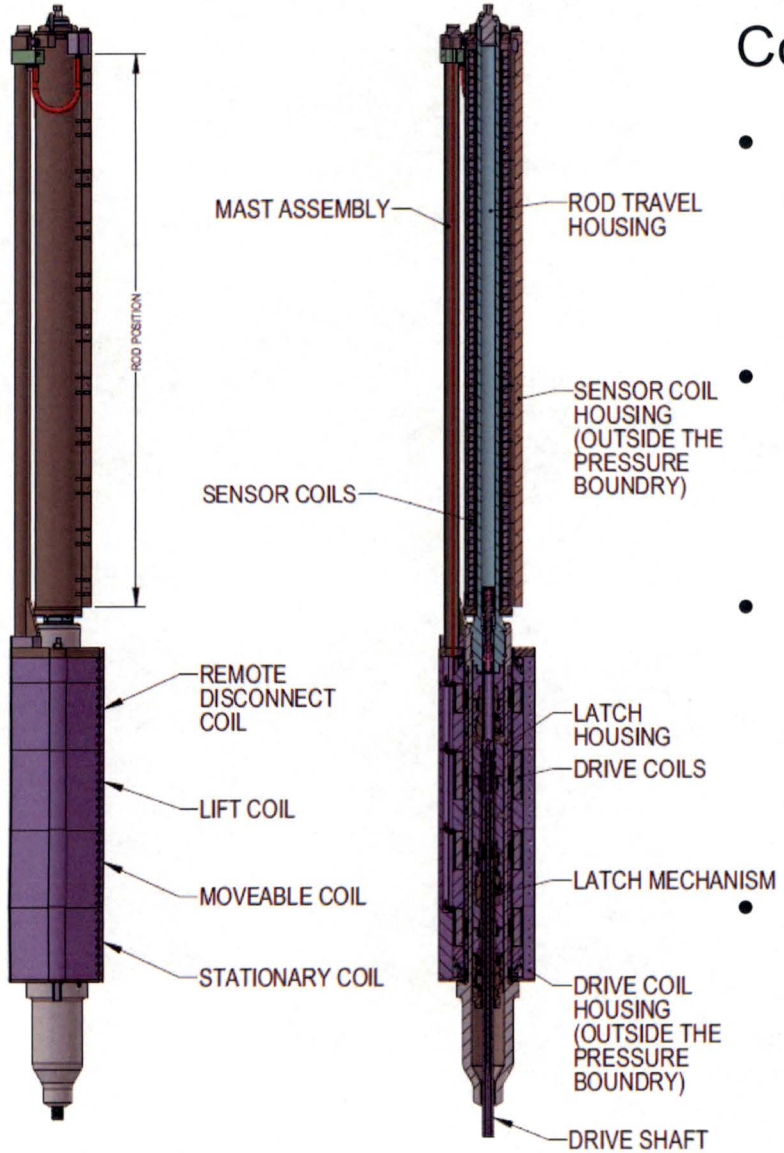

Control Rod Drive Mechanisms (CRDM)

- Components and materials are consistent with those for existing PWR magnetic jack CRDM design.
- Additional remote disconnect mechanism (RDM) coil and latch are provided on top of the typical configuration of three coils.
- Components external to primary pressure boundary are designed for operation in an evacuated containment, but not required to operate during ECCS blowdown.
- Components internal to primary pressure boundary (drive shaft & latch mechanism) are exposed to steam & non-condensable gases (N_2, H_2) on top of the pressurizer.

Copyright 2019 by NuScale Power, LLC.

4.6.1 Description of the Control Rod Drive System

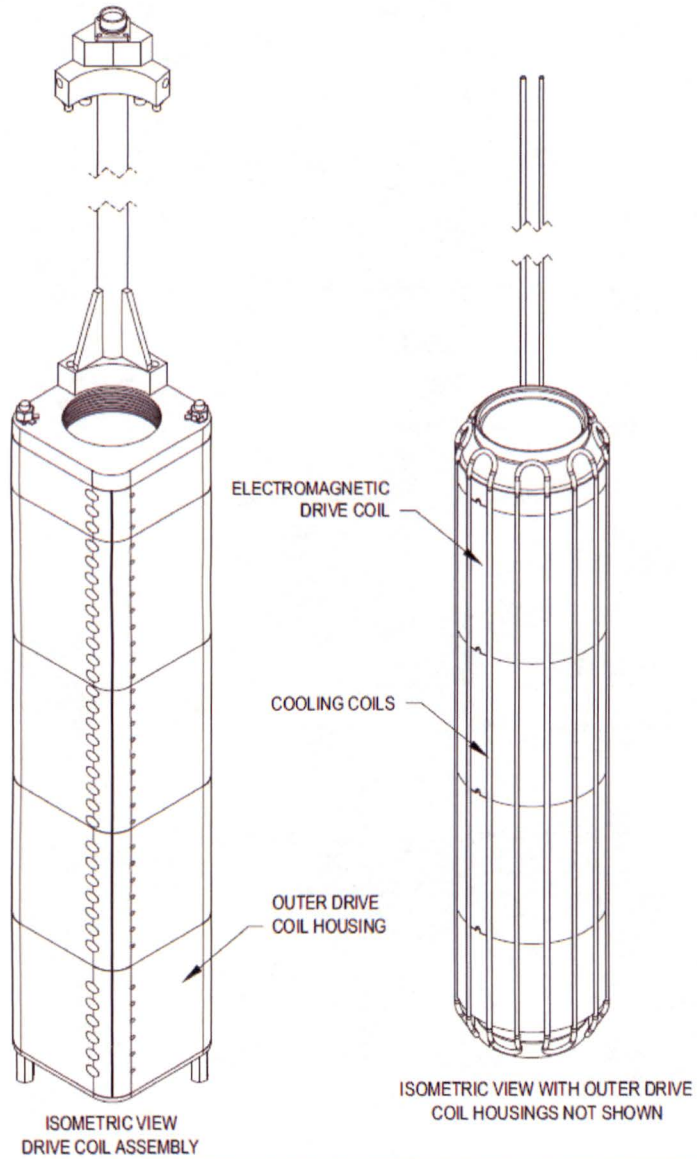

- Components external to primary pressure boundary are non-safety related (B2) and support SCRAM function by de-energizing from RTB.
- The CRDM electrical coils are exposed to a high-temperature vacuum, and require a cooling water system. The cooling coils envelope the electrical coils and are protected against impact by an outer coil housing and mast assembly (pipe).
- Disassembly of electrical components from the pressure boundary by upward retraction (slip-fit) after disconnection of cables and cooling water hoses.

Copyright 2019 by NuScale Power, LLC.

4.6.1 Description of the Control Rod Drive System

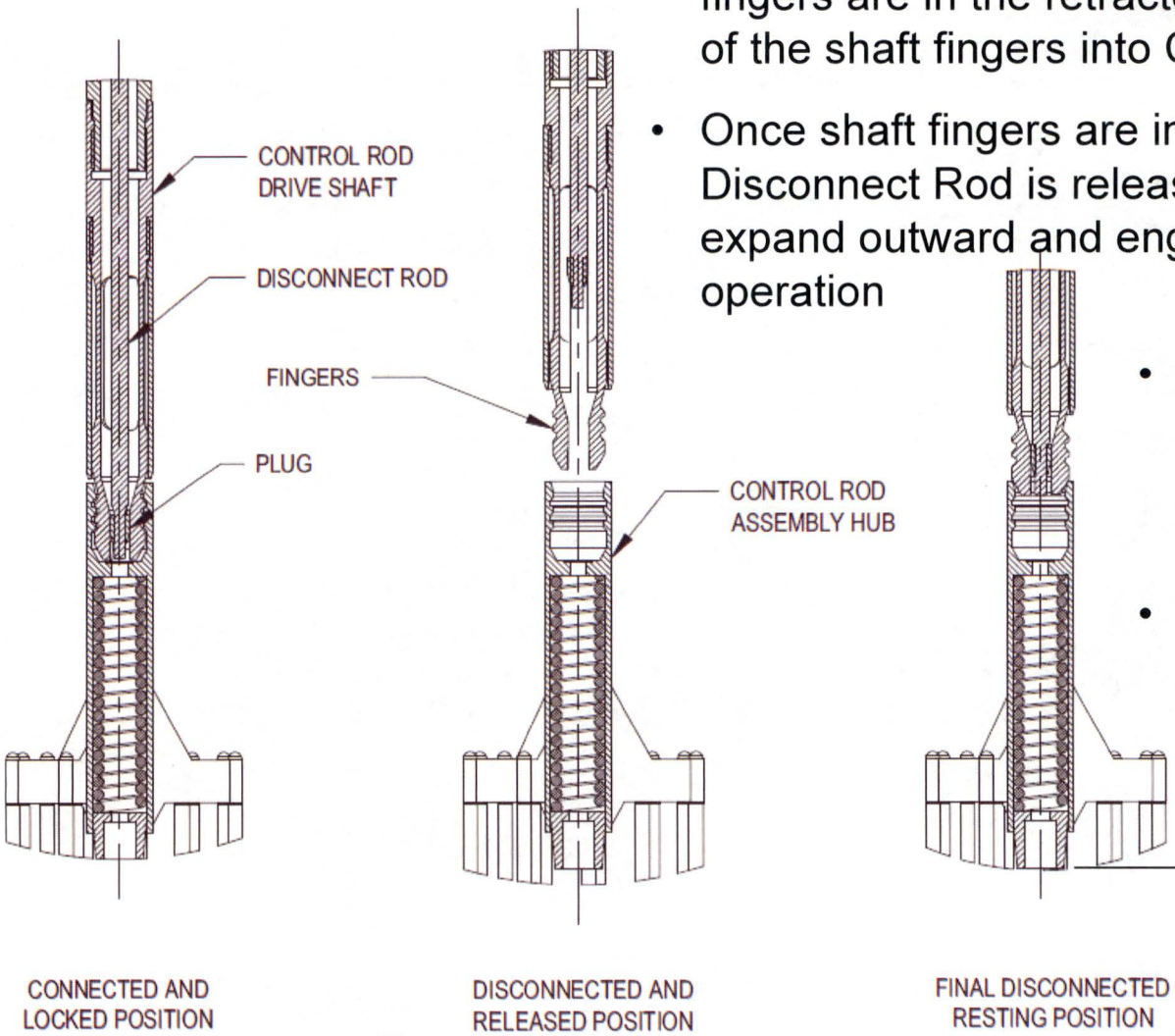

- Initially, the Disconnect Rod is withdrawn and shaft fingers are in the retracted position allowing insertion of the shaft fingers into CRA Hub
- Once shaft fingers are inserted in the CRA hub, the Disconnect Rod is released and forces shaft fingers to expand outward and engage CRA Hub for normal operation
- To release, the Disconnect Rod is withdrawn allowing the shaft fingers to return to the retracted position
- The drive shaft can now be withdrawn and separated from the CRA

Copyright 2019 by NuScale Power, LLC.

Chapter 4 – COL Items

COL Item 4.2-1

- A COL applicant that references the NuScale Power Plant design certification and wishes to utilize non-baseload operations will provide justification for the fuel performance codes and methods corresponding to the desired operation.

Copyright 2019 by NuScale Power, LLC.

Acronyms

- AO – Axial Offset
- AOO – Anticipated Operational Occurrences
- ASME – American Society of Mechanical Engineers
- BOL – Beginning of Life
- CHF – Critical Heat Flux
- COL – Combined License
- CRA – Control Rod Assembly
- CRDM – Control Rod Drive Mechanism
- DBE – Design Basis Event
- DCA – Design Certification Application
- ECCS – Emergency Core Cooling System
- EOL – End of Life
- EPRI – Electric Power Research Institute
- FIV – Flow Induced Vibration
- FSAR – Final Safety Analysis Report
- H/D – Height over Diameter
- HMP – High Mechanical Performance (Spacer Grid)
- HTP – High Thermal Performance (Spacer Grid)
- LOCA – Loss of Coolant Accident
- LTSD – Long Term Shutdown

Copyright 2019 by NuScale Power, LLC.

Acronyms

- MCHFR – Minimum Critical Heat Flux Ratio
- MPS - Module Protection System
- PDIL - Power Dependant Insertion Limit
- PWR – Pressurized Water Reactor
- RCS - Reactor Coolant System
- RG - Regulatory Guide
- RTB - Reactor Trip Breaker
- SAFDL - Specified Acceptable Fuel Design Limit
- SDM - Shutdown Margin
- SRP - Standard Review Plan
- TS – Technical Specifications

Copyright 2019 by NuScale Power, LLC.

Portland Office
6650 SW Redwood Lane,
Suite 210
Portland, OR 97224
971.371.1592

Corvallis Office
1100 NE Circle Blvd., Suite 200
Corvallis, OR 97330
541.360.0500

Rockville Office
11333 Woodglen Ave., Suite 205
Rockville, MD 20852
301.770.0472

Charlotte Office
2815 Coliseum Centre Drive,
Suite 230
Charlotte, NC 28217
980.349.4804

Richland Office
1933 Jadwin Ave., Suite 130
Richland, WA 99354
541.360.0500

Arlington Office
2300 Clarendon Blvd., Suite 1110
Arlington, VA 22201

London Office
1st Floor Portland House
Bressenden Place
London SW1E 5BH
United Kingdom
+44 (0) 2079 321700

http://www.nuscalepower.com
Twitter: @NuScale_Power

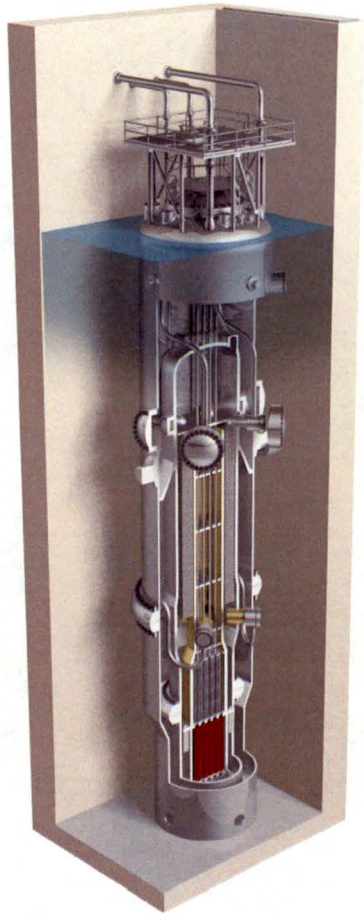

NUSCALE™
Power for all humankind

Copyright 2019 by NuScale Power, LLC.