Official Transcript of Proceedings

NUCLEAR REGULATORY COMMISSION

Title: Advisory Committee on Reactor Safeguards (ACRS), NuScale Committee

Docket Number: N/A

Location: Rockville, Maryland

Date: March 21, 2019

Work Order No.: NRC-0220 Pages 1-395

NEAL R. GROSS AND CO., INC.
Court Reporters and Transcribers
1323 Rhode Island Avenue, N.W.
Washington, D.C. 20005
(202) 234-4433

1
2
3
4 DISCLAIMER
5
6
7 UNITED STATES NUCLEAR REGULATORY COMMISSION'S
8 ADVISORY COMMITTEE ON REACTOR SAFEGUARDS
9
10
11 The contents of this transcript of the
12 proceeding of the United States Nuclear Regulatory
13 Commission Advisory Committee on Reactor Safeguards,
14 as reported herein, is a record of the discussions
15 recorded at the meeting.
16
17 This transcript has not been reviewed,
18 corrected, and edited, and it may contain
19 inaccuracies.
20
21
22
23

1 UNITED STATES OF AMERICA

2 NUCLEAR REGULATORY COMMISSION

3 + + + + +

4 ADVISORY COMMITTEE ON REACTOR SAFEGUARDS

5 (ACRS)

6 + + + + +

7 NUSCALE SUBCOMMITTEE

8 + + + + +

9 THURSDAY

10 MARCH 21, 2019

11 + + + + +

12 ROCKVILLE, MARYLAND

13 + + + + +

14 The Subcommittee met at the Nuclear
15 Regulatory Commission, Two White Flint North, Room
16 T3B50, 11545 Rockville Pike, at 8:30 a.m., Matthew W.
17 Sunseri and Margaret Sze-Tai Y. Chu, Co-Chairs,
18 presiding.

19

20 COMMITTEE MEMBERS:

21 MATTHEW W. SUNSERI, Co-Chair

22 MARGARET SZE-TAI Y. CHU, Co-Chair

23 RONALD G. BALLINGER, Member

24 DENNIS BLEY, Member

25 CHARLES H. BROWN, JR., Member

1 MICHAEL L. CORRADINI, Member
2 VESNA B. DIMITRIJEVIC, Member
3 WALTER L. KIRCHNER, Member
4 HAROLD B. RAY, Member
5 JOY L. REMPE, Member*
6 GORDON R. SKILLMAN, Member
7
8 ACRS CONSULTANT:
9 STEPHEN SCHULTZ
10
11 DESIGNATED FEDERAL OFFICIAL:
12 MIKE SNODDERLY
13
14 *Present via telephone
15
16
17
18
19
20
21
22
23
24
25

A G E N D A

P R O C E E D I N G S

8:30 a.m.

CO-CHAIR SUNSERI: All right, good morning. The meeting will now come to order. This is a meeting of the Advisory Committee on Reactor Safeguards, NuScale Subcommittee. I am Matthew Sunseri, Co-Chairperson for today's Subcommittee meeting, along with Margaret Chu and Michael Corradini.

Members in attendance today are Vesna Dimitrijevic, Charles Brown, Ron Ballinger, Harold Ray, Gordon Skillman, Michael Corradini, Walt Kirchner, and we have a consultant, Steve Schultz. Excuse me, and Joy Rempe is on the line. Mike Snodderly is the Designated Federal Official for today's meeting.

The Subcommittee will review the staff's evaluation of Chapter 10, Steam and Power Conversion Systems, Chapter 11, Radioactive Waste Management, and Chapter 12, Radiation Protection, of the NuScale Design Certification Application. Today, we have members of the NRC staff and NuScale to brief the Subcommittee.

The ACRS was established by statute and is governed by the Federal Advisory Committee Act. That means the Committee can only speak through its public

1 published letters. We hold meetings to gather
2 information to support our deliberations.
3 Interested parties who wish to provide
4 comment can contact our office after the meeting
5 announcement is published in the Federal Register.
6 That said, we set aside ten minutes for comments from
7 members of the public attending or listening to our
8 meeting. Written comments are also welcome.
9 The ACRS section of the USNRC public
10 website provides our charter, bylaws, letter reports,
11 and full transcripts of all full and subcommittee
12 meetings, including the slides presented there.
13 The rules for participation in today's
14 meeting were announced in the Federal Register on
15 March 18, 2019. The meeting was announced as an open
16 and closed meeting. We may close the meeting after
17 open portion to discuss proprietary material and
18 presenters can defer questions that should not be
19 answered in the public session at that time.
20 And I'll ask the presenters, NuScale in
21 particular, help keep us honest with the proprietary
22 information. We're not as familiar with that as you
23 are and if we drift into that area, we need you to
24 stop us and we'll go into closed session to address
25 those questions.

We have not received any written statements or requests to make oral statements at this Subcommittee meeting.

A transcript of the meeting is being kept and will be made available, as stated in the Federal Register Notice. Therefore, we request that participants in this meeting use the microphones located throughout the meeting room when addressing the Subcommittee. Participants should first identify themselves and speak with sufficient clarity and volume so they can be readily heard.

We have a bridge line established for the public to listen in to the meeting. To minimize disturbance, the public line will be kept in a listen-in-only mode.

To avoid disturbance, I request that attendees put their electronic devices in the off or noise-free mode at this time.

We will now proceed with the meeting and I call upon Zack Houghton of NuScale to begin today's presentations. Zack?

MR. HOUGHTON: Thank you very much. Good morning. I hope everybody can hear me okay. My name is Zack Houghton. I'm the Mechanical Design Engineering Manager at NuScale Power. I've been with

the company since 2010 and I'll be going over Chapter 10 of our design certification, which covers the power conversion systems.

MS. FOSAAEN: Good morning. Carrie Fosaaen, I'm the Licensing Supervisor for Chapter 10.

MR. HOUGHTON: All right. And with that, we'll jump into the slides. The first slide here is just a series of acronyms that you'll see through the presentation. Feel free to refer back to that or let me know if you have any questions as these appear on the slides.

So, for the presentation today, we'll be going through Chapter 10, generally in the order that it is presented in the design certification. So, we'll give a summary description of the power conversion systems. We'll talk through the turbine generator system, main steam supply system, and then, the remaining features of the power conversion.

So, the power conversion systems for the NuScale power plant is comprised of the turbine generator system, the main steam system, the main condenser and condenser air removal, turbine support systems, such as gland sealing, turbine bypass, circulating water, condensate polishing and feedwater treatments, and the feedwater system itself, and the

auxiliary boiler system.

So, I'll start the discussion by walking through the overview of the power conversion systems. If you're familiar with steam cycles in power plants, this should look very familiar. Hopefully, everybody can follow the slides well enough, it's a little bit small on the screen, I know.

To start with, I'll point out that for the NuScale design, where we actually draw the boundary for the main steam system is immediately after the main steam isolation valves, which are located on the reactor module itself, and also upstream of the feedwater isolation valves, which, again, are on the module.

And so, the picture shows the steam generator and the isolation valves, those are actually covered under our containment system, which is in Chapter 6, so I'll be focusing on the portions of the systems on the right side of those valves, as we see them on this slide. But I'll walk through the power conversion system at a high level before I jump into the detailed slides.

So, we start at the steam generator. For the NuScale design, we have two independent helical coil steam generators. Each of those steam generators

has its own dedicated main steam line, with two dedicated main steam isolation valves.

From there, the main steam lines combine into a single header that then flows steam over to the turbine generator. Steam is expanded through the turbine and exhausts into the condenser. This is a single-flow axial exhaust unit. And we also have turbine bypass capable of taking steam directly to the condenser and bypassing the turbine.

MEMBER SKILLMAN: Zack, let me ask this question, and it comes from the Safety Evaluation that the NRC produced. But my question really points to how the NRC's perception might have challenged NuScale's perception. Here is the sentence, it is on Page 10-5 of the Safety Evaluation, at the very bottom of the page.

The sentence is this: for the purposes of this review, the staff considers the main steam system to extend from the outlet of the reactor pressure vessel steam plenum on the secondary side, up to and including the turbine stop valves. Such system includes the containment isolation valves, connected piping that is 6.4 centimeters in diameter and the steam line to the decay heat removal system (DHRS) up to the DHRS actuation valves.

1 My question is, did the NRC's perception
2 of what is main steam versus NuScale's perception of
3 what is main steam affect your design or the review?
4 MR. HOUGHTON: No, I think it was just a
5 matter of semantics. I mean, certainly, we understand
6 the staff's review wanted to extend to the steam
7 generator itself, to look at the overall ties between
8 the systems, from a safety standpoint.
9 From a design standpoint, it was cleaner
10 for NuScale to cut that line after the containment
11 isolation valves, because those valves are part of the
12 reactor module itself that moves for refueling.
13 So, that was just a design choice that we
14 made, that really just makes, frankly, the paperwork
15 a bit easier on the design side. But we still
16 consider it as one system overall, so we understand
17 the staff's reason --
18 MEMBER SKILLMAN: Understand, you're saying
19 --
20 MR. HOUGHTON: -- for reviewing --
21 MEMBER SKILLMAN: -- not really, it was a
22 semantics issue. Okay.
23 Second question. Lower left-hand corner
24 of this image, you show the main feedwater isolation
25 valves and check valves immediately upstream. Is that

where the lines are disconnected on the module?

MR. HOUGHTON: Yes. So, in this, you can see --

MEMBER SKILLMAN: Lower left-hand corner.

MR. HOUGHTON: -- the removable spool piece --

MEMBER SKILLMAN: Oh, I see.

MR. HOUGHTON: -- is identified here.

MEMBER SKILLMAN: Oh, okay.

MR. HOUGHTON: So, that is the piece that would be removed.

MEMBER SKILLMAN: Got it.

MR. HOUGHTON: So, on the --

MEMBER SKILLMAN: I didn't recognize the spool piece nomenclature. Okay, thank you. Got it.

MR. HOUGHTON: Okay.

MEMBER SKILLMAN: Thank you.

CO-CHAIR SUNSERI: Thank you, Zack. While we're paused here --

MR. HOUGHTON: Sure.

CO-CHAIR SUNSERI: -- when I first saw this drawing, I had to scratch my head a little bit, and then I realized that the main steam safety valves are downstream of the main steam isolation valves. And I read an explanation why that is an acceptable

configuration.

Can you explain that? Because what I'm accustomed to is those valves providing pressure relief for the steam generator and being upstream of the steam stop valves.

MR. HOUGHTON: Yes, I can speak to that. So, typically, you would see those valves upstream of the isolation valves, and they're there to maintain the pressure in the steam generator lower than the design pressure, after a main steam isolation.

So, for the NuScale design, recognizing the importance of inventory preservation for our passive safety systems, we determined that we wanted to take any design action we could to eliminate those relief valves lifting from any possible event.

And so, what we did is, we designed the steam line pressure and the feed line pressure up to the outboard isolation valve to the same design pressure as the reactor coolant system itself. And so, by doing that, we've essentially protected the steam and feed lines by the relief valves on the reactor coolant system itself.

This is allowed by code. The ASME code allows you to remove the overpressure protection, if you have designed to preclude its use. And so, we

1 moved those main steam safety valves outside of the
2 secondary isolations.
3 CO-CHAIR SUNSERI: Yes, but I think the
4 code also requires thermal protection, if that line is
5 in blue on this chart is, let's say the valves are
6 closed and those are water-solid --
7 MR. HOUGHTON: Yes, they --
8 CO-CHAIR SUNSERI: -- they could heat up in
9 there and that would have a rapid pressure rise.
10 MR. HOUGHTON: So, not shown on this slide,
11 we do have a set of thermal relief valves --
12 CO-CHAIR SUNSERI: Oh, okay.
13 MR. HOUGHTON: -- that are located inside
14 the containment, on the feedwater lines. Those valves
15 would only be used during startup or shutdown
16 conditions, when the steam generator might be in
17 water-solid condition.
18 So, during startup and during shutdown, we
19 do go into a long-cycle cleanup mode, where we flow
20 feedwater all the way through the steam generator, for
21 getting chemistry, in the specification. And so,
22 during that time, if you had an isolation, we would be
23 concerned about water-solid heat up of the line --
24 MEMBER BLEY: So, those --
25 MR. HOUGHTON: -- so, the thermal relief

valve is there for that reason.

MEMBER BLEY: Those thermal reliefs have isolation valves on them?

MR. HOUGHTON: They do not.

MEMBER BLEY: Oh, you said you only use them, but they're there?

MR. HOUGHTON: Correct. So, we --

MEMBER BLEY: Oh, okay.

MR. HOUGHTON: Yes, so let me expand on that. We don't ever see a water-solid condition outside of startup and shutdown. So, those are the conditions which those valves would actually be relied on.

If you had steam in the system, you'll never go above the design pressure of the reactor coolant system itself, because you're protected by the relief valves on the reactor coolant system.

MEMBER BLEY: And you mentioned the bypass, what's your bypass capability?

MR. HOUGHTON: One hundred percent --

MEMBER BLEY: One hundred percent?

MR. HOUGHTON: -- steam bypass.

MEMBER BALLINGER: Does the turbine have a Wilson line?

MR. HOUGHTON: A Wilson line? I'm sorry,

I'm not familiar.

MEMBER BALLINGER: Do you condense -- do you end up having moisture condensing in the turbine?

MR. HOUGHTON: Yes, we do have some amount of moisture in the turbine. Oh, the Wilson performance line? Not an actual physical line? Okay.

MEMBER BALLINGER: Yes.

MR. HOUGHTON: Yes. Yes, and we have worked with turbine vendors who have provided, the vendor that we worked with most closely provided a Wilson line for the machine.

MEMBER BALLINGER: So, what's the exit quality?

MR. HOUGHTON: The exit quality, off the top of my head, is in the 11 to 12 percent range. But there actually is a heat balance in the back, on the slide, so you can check me on that. We actually, we made an effort to keep it within standard moisture regions for the turbine.

I'll also take that as an opportunity to mention our steam conditions. We have 500 pound, 580 degree steam at the steam generator exit. So, that gives us about 100 degrees of super heat in the design.

So, given that super heat and the

relatively small size of our turbine generator, you'll notice we don't have any moisture separate reheaters in the system.

MEMBER BALLINGER: That's why I asked if you had a Wilson line.

MR. HOUGHTON: Yes.

CO-CHAIR SUNSERI: So, let me just follow up, then, on these thermal relief valves. You moved the main steam safety valves because you were worried about leakage and inventory loss, but you replaced them with thermal valves. So, what's the -- what was the tradeoff?

MR. HOUGHTON: So, thermal relief valves are much smaller, right? Much less volume, when they relief. They're there for relieving thermal overpressure protection.

Where a main steam safety valve would be there where you have a design pressure lower than your reactor coolant system design pressure, so you have much more energy that has to be removed and you're removing that energy with steam instead of liquid.

So, the size of those valves would have precluded them from being located inside the containment. But also, again, by raising the design pressure of the system, there wasn't a need for those

1 valves and we wanted to take every action that we
2 could to avoid a chance of those valves lifting during
3 decay heat removal operation.
4 CO-CHAIR SUNSERI: So, it's more of a case
5 of constructability and space than --
6 MR. HOUGHTON: Yes, the --
7 CO-CHAIR SUNSERI: -- the leakage of the
8 valves or inadvertent lifting of them?
9 MR. HOUGHTON: Yes.
10 CO-CHAIR SUNSERI: Okay.
11 MR. HOUGHTON: Yes, for a number of
12 reasons, we just felt it was the best design choice --
13 CO-CHAIR SUNSERI: Okay.
14 MR. HOUGHTON: -- for our plant.
15 CO-CHAIR SUNSERI: All right. Thank you.
16 MEMBER RAY: Before you move out of 10.1,
17 the SER refers to stretch power level, and somewhere,
18 I've missed understanding what that reflects. Is that
19 part of the design certification, stretch power?
20 MR. HOUGHTON: I'm sorry, can you clarify
21 what you mean by stretch power?
22 MEMBER RAY: Well, I'm just reading it here
23 in the SER, it says, let me back up to the beginning
24 of this sentence here, depicts the heat balance of the
25 system at rated power and DCA Part 2 Tier 2 Figure

10.3-1, Flow Diagram, balance diagram at stretch power, balance wide open for steam and power conversion cycle, depicts the heat balance at stretch power. I'm just trying to understand the terminology, stretch power.

MR. HOUGHTON: Sure. So, typically, your heat balance for rated power, you have some amount of flow capability left in your turbine control valves. So, it's common in applications to see a heat balance for valves wide open flow, which it sounds like they're referring to as stretch power in the SER.

So, that's just showing the overall peak flow capacity of the system. However, you would normally operate with some amount of control left in those valves.

MEMBER RAY: So, it's not reflecting some increased power level beyond the --

MR. HOUGHTON: No, it's showing a bounding case of flow for the system.

MEMBER BLEY: But your rated power won't be exceed in operations, except by accident?

MR. HOUGHTON: Correct.

MEMBER BLEY: It's just an odd --

MR. HOUGHTON: I hesitate a little bit, but the term accident there, but yes, you would normally

maintain with your rated conditions.

MEMBER RAY: It's an odd term to use, stretch power, for heat balance and so on. I understand the circumstances under which higher than rated, normal rated flow would be examined, I just never seen it referred to as stretch power, but, okay.

MEMBER BLEY: It's the staff that done it.

MEMBER RAY: Well, I understand. I assumed it had been taken from the application.

MR. HOUGHTON: I'm not familiar, but --

MEMBER RAY: Okay.

MEMBER KIRCHNER: Zack, while we're here, where is the connection from the other steam generator, from the other nuclear power module? You have two modules per turbine generator set, right?

MR. HOUGHTON: No, we have -- one reactor module is connected to its own dedicated turbine generator system.

MEMBER KIRCHNER: Oh, there's six, there's 12 turbine generators?

MR. HOUGHTON: Correct, there are 12 turbine generator sets. Each reactor module has two independent helical coil steam generators within the single module.

MEMBER KIRCHNER: Okay.

MR. HOUGHTON: Okay. All right. I'll continue walking through the system.

So, as I mentioned, steam expands through the turbine, condenses in the condenser, which is fed by the cooling water from the circulating water system. Condensate in the condenser is forwarded to the condensate pumps.

From there, it passes through condensate polishing and gland seal condenser, and then, through the first two stages of feedwater heating. Passes to the feedwater pumps.

Feedwater pumps then supply flow to the high-pressure heater, then back through the feedwater regulating valves, which in our design are dedicated for each independent steam generator. So, we have one feedwater regulating valve per steam generator. And those are located in the Reactor Building itself. And then, back to the steam generator itself.

MEMBER SKILLMAN: And, Zack, when you refer to steam generator, there are two steam generators in each module, correct?

MR. HOUGHTON: Correct.

MEMBER SKILLMAN: Okay, thank you.

MR. HOUGHTON: And I will have future slides that will go into more detail on each of these

systems, but I just wanted to give the big picture overview before we got into it. All right.

So, moving on to Slide 6. Here, we see -- I hope this picture is fairly familiar to the members, this is an overall, this is half of the site plan.

So, in the upper-middle box here, in the darker black, you can see the outline of the Turbine Generator Building itself. And ghosted in the center of that, you can see the turbine condenser and generator. So, this just gives a general layout of the turbine islands respective to the site.

In the lower-middle, this is an outline of our Reactor Building. Again, I hope this is familiar to the members. The six reactor modules would be on one side.

So, this is identifying the six reactor modules feed six turbine generators on one side of the plant. This would be mirrored, then, on the south side of the plant, as we're looking at it here.

MEMBER BLEY: You'll get to it later, but from that arrangement, all of those turbines are aligned at the Reactor Building, should they come apart?

MR. HOUGHTON: That's correct. And I will get to that later.

MEMBER BLEY: I kind of had it turned the other way. I guess I was --

MR. HOUGHTON: I guess, and I will take a minute to speak to that, now. One of the things that we recognized early on was that, we recognized this would be an unfavorable orientation, using the verbiage from Reg Guide 1.115, which addresses turbine missiles. So, from a --

MEMBER BLEY: Well, we weren't just thinking about turbine missiles, but go ahead.

MR. HOUGHTON: Yes. So, this design actually afforded the smallest layout, the smallest footprint, and the most equal pressure drop to each of the turbines. So, there were a number of reasons that drove to going to this design.

We do also analyze for the missile from a turbine against the Reactor Building. I'll cover that later, though, and that's also addressed in Chapter 3.5 of our certification.

MEMBER BLEY: Did you do any probabilistic analysis on the turbine missile? Not just the single-number probability, but the actual mechanics of how the rotor breaks into however many pieces and the range of energies, momentums, for each of those pieces?

1 MR. HOUGHTON: We did not do a
2 probabilistic analysis to that level. I will say, we
3 analyzed for --
4 MEMBER BLEY: Did you get your maximum
5 energy for a hunk of rotor?
6 MR. HOUGHTON: One thing I'll say is, this
7 is an issue that is still undergoing discussion with
8 the staff, so I don't want to give an answer that may
9 change. But we did pick what we believed to be a
10 bounding rotor fragment and analyzed for that, and a
11 missile, a blade itself.
12 MEMBER BLEY: I'm sorry, when does this
13 actually come up? Is this in --
14 MR. HOUGHTON: This is in Chapter 3. So,
15 the details of our analysis, our turbine and barrier
16 analysis, is in Chapter 3. And again, it's still in
17 discussion with the staff. We recognize this is a new
18 approach for turbines.
19 MEMBER BROWN: There is no overspeed,
20 you're not reliant on overspeed? It's stated in both
21 the chapter and in the SER.
22 MEMBER BLEY: So, it can go as fast as it
23 --
24 MEMBER BROWN: That's right. Well, the
25 argument is supposed to be presented in Chapter 3, I

1 think.

2 MEMBER BLEY: We'll get to it in Chapter 3,

3 but just off the top, do you remember how many pieces

4 you thought the rotor broke into for that analysis?

5 MR. HOUGHTON: We looked at the largest

6 piece that it would break into and we analyzed --

7 MEMBER BLEY: That was at least a third, I

8 hope.

9 MR. HOUGHTON: I can't speak to the exact

10 number off the top of my head, and again --

11 MEMBER BLEY: Well, we'll see it in Chapter

12 3.

13 MR. HOUGHTON: -- those details will come

14 up later. But I do want to make a point, and this

15 will show up in my slides later, we do not rely on

16 missile generation probability or the overspeed

17 protection system from a health and safety of the

18 public standpoint, which is what we present here, in

19 our design certification.

20 However, I mean, for other reasons,

21 investment protection, OSHA reasons, of course, we're

22 going to have very similar overspeed protection

23 systems to what you would see in a light water reactor

24 today.

25 It's actually standard expectation from

1 the vendors. They do a number of overspeed analyses.
2 The rotor material requirements from the vendors are
3 very similar to what we see in the regulations, it's
4 just not something we credit in our safety case.
5 MEMBER BALLINGER: Are these monoblock
6 rotors?
7 MR. HOUGHTON: Yes. For this size machine,
8 we would expect --
9 MEMBER BALLINGER: They're not keyed --
10 MR. HOUGHTON: -- a single-forged --
11 MEMBER BALLINGER: They're not --
12 MR. HOUGHTON: No.
13 MEMBER BALLINGER: -- discs keyed on a
14 shaft, it's monoblock?
15 MR. HOUGHTON: Correct.
16 MEMBER BLEY: That helps.
17 MEMBER BALLINGER: It makes a big
18 difference.
19 MR. HOUGHTON: Yes. Now, I will say, this
20 is -- the final vendor selection is up to the COL
21 applicant. But from all of our discussions with
22 turbine vendors, for this size machine, we would
23 expect a monoblock forged rotor, or similar
24 construction, not keyed discs.
25 MEMBER BLEY: I missed your last phrase.

1 MR. HOUGHTON: We would not expect keyed
2 discs --
3 MEMBER BLEY: Oh, yes.
4 MR. HOUGHTON: -- for this size of machine.
5 MEMBER BALLINGER: Now, I'll defer to my
6 esteemed colleague, Professor Corradini, but with
7 respect to plugging margin, you have two steam
8 generators that are in the module, if you start
9 plugging one, does the flow arrangement and everything
10 start -- at what part does it start impacting the
11 ability in the other steam generator?
12 In a normal PWR, if you start plugging
13 steam generators on one side, it starts having an
14 effect on what you can do to the plant and I don't
15 know the dynamics here, but is that effect the same
16 here, in your design?
17 MR. HOUGHTON: I wouldn't be able to speak
18 to the specifics of that stability analysis with tube
19 plugging. If it's acceptable, I'd like to take a note
20 on that and maybe our team can discuss that further
21 when we get to that chapter.
22 MEMBER BALLINGER: Yes, a lot of times,
23 people quote a 15 percent margin, but they can't use
24 the 15 percent margin if all of that plugging is in
25 one steam generator.

1 MR. HOUGHTON: Yes, understood.

2 MEMBER BALLINGER: Okay.

3 MEMBER KIRCHNER: Could you just clarify,

4 Zack, what you said was left for the COL?

5 MR. HOUGHTON: The COL --

6 MEMBER KIRCHNER: The selection of the

7 actual turbine, which would then determine the

8 missile, which would then determine the -- you have to

9 design the Reactor Building with that consideration.

10 Or is it entirely below the potential path of a

11 missile?

12 MEMBER BLEY: This can come off in any

13 direction.

14 MEMBER KIRCHNER: Yes, I know.

15 MS. FOSAAEN: So, our design certification

16 does assume a certain design parameter. If a COL

17 selected a turbine that didn't meet those parameters,

18 there would have to be additional re-analysis. And

19 there is a COL action to capture that, if that was

20 required. But the turbine that was presented here is

21 typical of the many that we've talked to vendors, and

22 so, that is the design expectation.

23 MEMBER BALLINGER: Now, consistent with the

24 cartoon, it's almost impossible for a turbine

25 disassembly rotating to take out the condenser? In

other words, the way the cartoon is done, the condenser is completely separate on one end of the turbine, there's no low-pressure turbine, where there's a condenser lower?

MEMBER BLEY: No condenser underneath at all?

MEMBER BALLINGER: No condenser underneath?

MR. HOUGHTON: There's no condenser underneath. The actual mechanics of a blade separation type event, I would be hesitant to say that you couldn't fail a condenser on a turbine missile. And then, we do have condensers on adjacent units.

MEMBER BLEY: The stuff I've seen on analysis and actual looking at these things is, they can come off up to a 30-degree angle.

MEMBER BALLINGER: Yes. But I'm looking at the cartoon --

MEMBER BLEY: So, if it's the LP end, they might be able to nip in there.

MEMBER BALLINGER: You think?

MEMBER BLEY: It looks like it.

MEMBER BALLINGER: That's what I mean, it's a cartoon, so I don't know.

MEMBER BLEY: It's a cartoon.

CO-CHAIR SUNSERI: But if your turbine fell

apart, you would lose your condenser, because they've got to exhaust the exhaust out of there, right?

MR. HOUGHTON: Correct, you would lose condenser --

CO-CHAIR SUNSERI: The turbine shell is the boundary of the condenser.

MEMBER BLEY: That's true.

MEMBER BALLINGER: I just don't want to get seawater or whatever it is --

CO-CHAIR SUNSERI: Okay.

MEMBER BALLINGER: -- into the steam generator, which happens to be in the power block. That's a bad hair day.

MR. HOUGHTON: All right. So, moving on to Slide 7. This just shows a general rendering, I'll say, of the power island layout. I included this in here just to give a feel for the layout of a turbine generator island in a NuScale power plant.

Again, as I had mentioned, it was an axial exhaust steam turbine, so you'll see the flow comes in in the front end, exhausts axially to the condenser in the rear.

For scale, you can see an individual standing next to the generator exciter, there on the right. This just gives an overall feel for the scale

of the equipment in our design.

Feedwater heaters will be located next to the unit, as well as the lube oil pumps, which don't show on this picture, gland steam condenser, feedwater, and condensate pumps, all next to the turbine itself.

MEMBER BLEY: That Chapter 3 discussion will include why you don't have an overspeed trip?

MR. HOUGHTON: We do have an overspeed trip.

MEMBER BLEY: Oh, I'm --

MR. HOUGHTON: A redundant, independent overspeed protection equipment, which is --

MEMBER BLEY: Is that part --

MR. HOUGHTON: -- standard for industry.

MEMBER BLEY: Is that to be discussed today?

MR. HOUGHTON: We -- I can discuss with you today, yes. We don't have the details of that in our application, again, because we don't credit overspeed protection for health and safety of the public. We've analyzed for barriers.

So, we talk at a high level in our application about the fact that this will have industry-standard overspeed protection equipment. And

I can tell you that industry-standard overspeed protection equipment for this type of unit is independent overspeed systems.

So, it does have overspeed protection. I don't want to give the impression that we've removed any of that equipment, we just don't credit it for health and safety.

MEMBER SKILLMAN: But it's going --

MEMBER BLEY: Do we look at that in Chapter 7?

MEMBER SKILLMAN: It's going to have a hydraulic and mechanical device?

(Simultaneous speaking.)

MR. HOUGHTON: It's common for newer units to have independent electrical. Many units have removed the hydraulics, and that's been done in the operating fleet as well. So, I wouldn't say specifically that it would have a hydraulic unit.

MEMBER BLEY: So, this is another thing that's not designed yet?

MR. HOUGHTON: The final design is not selected for this, that's correct.

MEMBER BROWN: I didn't see any details either place, whether they were going to have redundant --

1 MEMBER BLEY: We don't have any details.
2 MEMBER BROWN: -- overspeed, whether it was
3 just going to be a single overspeed system. There was
4 no specific details provided on that in this chapter.
5 There weren't any in Chapter 7. And there -- I tried
6 to find some stuff in Chapter 3, but didn't, was not
7 successful in the time I had.
8 MR. HOUGHTON: Again, in the application,
9 you'll see we quote that we will use industry-standard
10 overspeed protection equipment. So, I'm just trying
11 --
12 MEMBER BROWN: Well, that's not a problem
13 --
14 MR. HOUGHTON: -- to give a little bit more
15 detail --
16 MEMBER BROWN: -- what I looked for --
17 MR. HOUGHTON: -- of what that I mean.
18 MEMBER BROWN: -- in Chapter 3 was where
19 was the barrier analysis to show that that was okay?
20 And that, I kind of walked away with, that's not there
21 yet.
22 MR. HOUGHTON: Yes, understood. And that's
23 the part that's still in discussion with the staff --
24 MEMBER BROWN: All right.
25 MR. HOUGHTON: -- of the details of that

1 barrier analysis. So, that will come later.
2 So, we've covered much of this information
3 already, but on to 10.2, the turbine generator system
4 itself. Again, turbine generator converts thermal
5 energy from the steam into rotational and then,
6 electrical energy.
7 MEMBER BLEY: I'm sorry to --
8 MR. HOUGHTON: The generator is directly
9 coupled --
10 MEMBER BLEY: -- hang up on this.
11 MR. HOUGHTON: That's okay.
12 MEMBER BLEY: And I know we'll get to
13 Chapter 3. But you said something along the way that
14 made me suspect.
15 This alignment concerns me. And analyses
16 I've seen, granted with bigger machines, the missile
17 can cut right through four feet of reinforced
18 concrete. They may not be able to get out the other
19 side of such a room, but they can get in. I don't
20 know if these can.
21 But you said, the overspeed trip's not
22 important, because there's no hazard to the public.
23 But if one of those missiles gets in and cuts up
24 reactor, you could have a significant accident on that
25 reactor.

1 And if your probability of turbine missile
2 is on the order of those for most operating plants,
3 that could be the biggest contributor to risk. And I
4 don't think it's covered in the PRA, is it? Yes, I
5 didn't thinks so. Anyway, think about that between
6 now and Chapter 3.
7 MR. HOUGHTON: Yes.
8 MEMBER BLEY: Will you be back for Chapter
9 3 or somebody else do that?
10 MR. HOUGHTON: We'll have somebody else
11 here for Chapter 3, most likely. But --
12 (Laughter.)
13 MEMBER BLEY: Let them know.
14 MR. HOUGHTON: Sure. But I want to make
15 sure to clarify, I'm certainly not trying to imply
16 that we don't view the overspeed protection system as
17 important and we would expect a probability in line
18 with what industry and the fleet today show.
19 However, we have opted to do the detailed
20 barrier analysis of the Reactor Building. So, that is
21 what we credit. But I don't want to give the
22 impression that we don't view it as important, it
23 certainly is important from just an overall investment
24 and personnel protection standpoint.
25 MEMBER BLEY: Okay. And we'll see that

analysis. But from ones with larger turbines, aligned right, those missiles can cut right through a lot of material.

MR. HOUGHTON: You will see more detail on that analysis.

MEMBER BLEY: Okay.

MR. HOUGHTON: All right. So, going back to the slide, the last things that I'll highlight here is, we have a 3,600 rpm machine, which is standard for this size, 50 megawatts electric nominal output.

And the generator type is a totally enclosed water-to-air cooling unit, so we do not have a hydrogen supply system for the turbine generator, as would be typical for large units. We do have air coolers located within an enclosure around the generator.

MEMBER SKILLMAN: Just a point of admin, on your 17 pages of acronyms, you need TEWAC.

MR. HOUGHTON: I apologize, I thought we got that one on there.

MEMBER SKILLMAN: I'm just pulling your leg.

(Laughter.)

MEMBER SKILLMAN: It's the only application where I actually carrying your acronym list with me.

MR. HOUGHTON: Oh, from the application.

MEMBER BLEY: I do too, but there's quite a few missing.

MEMBER SKILLMAN: And so, TEWAC is not there.

MEMBER BLEY: And the same acronym is used for different things in several cases.

MEMBER SKILLMAN: Nothing --

MR. HOUGHTON: Okay, thank you.

MEMBER SKILLMAN: No action on your part.

MR. HOUGHTON: I'm sure Carrie took a note.

MEMBER BROWN: What's the WAC?

MEMBER SKILLMAN: Air-cooled.

MEMBER BROWN: TE is totally enclosed, I presume, but what's WAC? Water --

MEMBER SKILLMAN: Water --

MEMBER BROWN: -- water-air, okay.

MR. HOUGHTON: Water-to-air cooled.

MEMBER BROWN: Okay. I kept thinking air conditioned, don't ask me why.

MR. HOUGHTON: All right. So, this is the one slide that I have on missile protection. We've covered the gist of it already. Again, this is addressed in Section 3.5.

I will point out again, the barrier

1 approach is the approach that we opted to take and is
2 recognized per Regulatory Guide 1.115. Yes, I think
3 we've covered the other points on this slide.
4 MEMBER BLEY: And not to sound like a
5 broken record, I'm staring at your arrangement drawing
6 and you said, this arrangement gets you better
7 balanced steam flow, but you have a pipe that comes
8 out from the reactor, turns up at a right angle, turns
9 again and goes into the turbine. I can't imagine why
10 that makes a difference whether the turbine is sitting
11 this way or this way.
12 MR. HOUGHTON: It was about the overall
13 arrangement of the turbine generators themselves,
14 relative to the other units.
15 MEMBER BLEY: Ah, okay.
16 MR. HOUGHTON: So, from Unit 1 to Unit 6.
17 MEMBER BLEY: Is there some analysis on
18 that available somewhere?
19 MR. HOUGHTON: I do not have an analysis
20 available on that. There's not, in the -- it's not in
21 the design certification. But I'll say, that's a
22 detail that we continue to look at, the tradeoff.
23 MEMBER BLEY: Well, we'll see what the
24 staff has to say when we get to Chapter 3. That thing
25 really bothers me. Go ahead.

1 MR. HOUGHTON: All right. Moving on to
2 turbine bypass. So, as discussed, we have designed
3 for 100 percent rated steam flow bypass capability to
4 the main condenser.
5 The reason for this was really because we
6 wanted to avoid a reactor trip on a turbine trip. So,
7 it minimizes the impact on the operation staff,
8 minimizes the overall impact to the plant. So, this
9 was a design choice, again, that we made early on,
10 with that intent in mind.
11 MEMBER SKILLMAN: By how much did that
12 increase the size of your condenser?
13 MR. HOUGHTON: Exact percentage, I couldn't
14 tell you off the top of my head. But I will say that
15 we spoke with many condenser vendors on this
16 particular requirement, and turbine vendors. It was
17 not a significant issue from a design standpoint.
18 Also, common for smaller combined-cycle
19 type units that are closer in design to our turbine
20 generator system. It's not uncommon to have 100
21 percent bypass for plant maneuverability reasons.
22 MEMBER SKILLMAN: Okay, thank you.
23 MEMBER CORRADINI: That actually brought up
24 something. These are standard sizes for combined-
25 cycle gas plants, is that not correct? Or very close

to, so this is an off-the-shelf item?

MR. HOUGHTON: I would hesitate to call it off-the-shelf, but very close to many units that are in industrial and smaller combined-cycle power plants.

MEMBER CORRADINI: Thank you.

MR. HOUGHTON: So, it's still fully customized for the particular steam conditions, the steam path is customized, but it's a very common unit.

MEMBER CORRADINI: Thank you.

MR. HOUGHTON: All right. So, on to the main steam system. So, the main steam system has the function of providing steam to the turbine generator, the gland seal steam regulators, and directly to the turbine bypass valve. It also provides the extraction steam from the turbine to the feedwater heaters, so we call that piping part of our main steam system.

And then, the second bullet here is just pointing out that this is the -- we would rely on the main steam system for normal shutdown, for residual and sensible heat removal, taking steam from the steam generator to the condenser for plant cooldown during shutdown operations, or during startup. Typical for any steam plant.

CO-CHAIR SUNSERI: I think you'll probably get to it, but there's only one open item in this

1 chapter and it deals with decay heat removal, for
2 another reason, right? You want an exception to
3 design criterion for loss of offsite power, or
4 something, right?
5 But it's being held against this chapter
6 as well, so when you get to that point, I'd like to
7 hear why it's being held against this chapter and not
8 8, or whatever the -- wherever the exemption is being
9 taken.
10 MR. HOUGHTON: Okay. And that may be a
11 better question for the staff, it's their open item --
12 CO-CHAIR SUNSERI: Okay. Yes.
13 MR. HOUGHTON: -- that's tied to this
14 chapter.
15 CO-CHAIR SUNSERI: Yes.
16 MR. HOUGHTON: But if we can, we'll
17 elaborate on that.
18 CO-CHAIR SUNSERI: That's fair.
19 MR. HOUGHTON: All right. So, on Slide 12,
20 we just see a close-up view of the main steam system,
21 as we discussed in the general overview.
22 What I'll point out here that's unique for
23 our design is the secondary main steam isolations.
24 So, again, recognizing the importance of our passive
25 heat removal system, we determined that it would be

appropriate to include a second set of isolation valves.

These are located in the Reactor Building, on the Seismic Category I section of the main steam line. And they are there as backup and they are credited as a backup if we had a failure of one of our main steam isolation valves concurrent with a steam line break or a tube rupture.

I'll say, this approach is standard for PWRs. NUREG-0138 describes this in more detail. Typical PWRs in operation today credit their turbine stop valve or other downstream valves during a line break concurrent with a main steam isolation valve failure.

We took a similar approach, but opted to put dedicated isolation valves in closer to the reactor, with some increased controls. This is also a point that has been discussed heavily with the staff.

MEMBER CORRADINI: And up to the red valve, it's at RCS pressures?

MR. HOUGHTON: Correct. Up to the red valve, the secondary main steam isolation valve is designed up to 2,100 PSI, the same as the reactor coolant system.

1 MEMBER SKILLMAN: Well, this is really the
2 backup for your decay heat removal system, correct?
3 MR. HOUGHTON: It does serve as a backup
4 isolation --
5 MEMBER SKILLMAN: Okay. That --
6 MR. HOUGHTON: -- for decay heat removal
7 boundary, correct.
8 MEMBER SKILLMAN: That assures that you
9 block that, so that you can drive decay heat removal?
10 MR. HOUGHTON: Correct. And it's only
11 necessary, or relied on in our safety analyses, for
12 DHR operation with a concurrent tube rupture or main
13 steam line break.
14 MEMBER SKILLMAN: Okay, thank you.
15 MEMBER RAY: Talk a little bit more, if you
16 would, about these are Seismic Category I valves, the
17 red ones, but not safety-related, and you just
18 described their crediting, what's the logic for them
19 not being safety-related?
20 MR. HOUGHTON: So, the complete path for
21 this can be found in NUREG-0138, but it's --
22 basically, the fact that it's credited as a backup to
23 our safety-related equipment and that the safety-
24 related equipment would only -- and that it would only
25 be credited with a concurrent failure of a main steam

1 line or with a tube rupture. So, this is following
2 past precedent and, again, has been discussed heavily
3 with the staff.
4 I will also say, these isolation valves,
5 they are periodically tested, per our in-service
6 testing program. So, we have put them within an
7 augmented section of our in-service testing program,
8 and there are technical specifications that address
9 the valves as well.
10 MEMBER RAY: Well, and that's what sort of
11 puzzles me, is that they are treated as if they're
12 performing a safety function and yet, they're not
13 classified as safety-related, and the reasons for that
14 sort of dumbfound me, but that's okay, as long as I
15 understand what you're doing.
16 MR. HOUGHTON: Thank you.
17 MEMBER KIRCHNER: I had the same question,
18 Harold. I expected you would use the same valve on
19 either side of that blue or red.
20 MR. HOUGHTON: We have not precluded using
21 the same design valve, although the exact design for
22 that secondary main steam isolation valve is not
23 selected at this time. It would be a pneumatically or
24 hydraulically operated valve.
25 MEMBER CORRADINI: What is the --

1 MR. HOUGHTON: But it does --

2 MEMBER CORRADINI: -- design of that blue

3 valve?

4 MR. HOUGHTON: What's that?

5 MEMBER KIRCHNER: It's safety --

6 MEMBER CORRADINI: It's safety-related, but

7 what's the design of the blue valve? Have you

8 specified that?

9 MR. HOUGHTON: The design of the blue valve

10 is a hydraulically operated ball valve that we've been

11 working with Curtiss-Wright Enertech for a number of

12 years. And we'll describe that valve in detail when

13 we bring Chapter 6 for presentation. It's common for

14 all of our containment isolations.

15 MEMBER KIRCHNER: So, you're not going to

16 specify the valve that's colored in red?

17 MR. HOUGHTON: We have not specified the

18 exact design by vendor in detail at this point.

19 MEMBER KIRCHNER: So, that's captured

20 somewhere, since you're crediting this, where's that

21 captured in the design cert?

22 MR. HOUGHTON: That is discussed in Section

23 10.3. We discuss the secondary isolation valves and

24 their design requirements.

25 MEMBER BLEY: You might discuss that these

1 turbines are similar to turbines used in other
2 applications. For the steam system, is a ball valve
3 MSIV a common use? I don't think I've seen that.
4 MR. HOUGHTON: Not common in the nuclear
5 industry, to my knowledge, however, these valves have
6 been used in steam and other critical services in
7 industrial applications, petrochemical. So, there is
8 significant operating experience behind the valves
9 we've chosen.
10 But to my knowledge, they haven't been
11 used as main steam isolation valves in the nuclear
12 industry, although, I do know that some plants have
13 used these in other cases. The specific details, I
14 wouldn't be able to give you --
15 MEMBER BLEY: Are these --
16 MR. HOUGHTON: -- off the top of my head.
17 MEMBER BLEY: -- pretty fast-acting? How
18 fast are they?
19 MR. HOUGHTON: They have a seven-second
20 closure time requirement, and we expect to be able to
21 stay well below that.
22 MEMBER BLEY: And with the ball valves,
23 steam cutting is not a problem?
24 MR. HOUGHTON: The design of the valves is
25 fairly unique for these. Of course, we are cognizant

of the concern of steam cutting, and that's something that would be proven through qualification testing of the valve.

MEMBER BLEY: When's that come up?

MR. HOUGHTON: That would come up prior to -- not at design certification. That would be done with the combined operating license.

MEMBER BLEY: Okay.

MR. HOUGHTON: Around that same time. The exact timing of when the -- but certainly --

MEMBER BLEY: Clever new designs --

MR. HOUGHTON: -- qualification of --

MEMBER BLEY: -- will often give you surprises.

MR. HOUGHTON: Yes. Qualification testing will be completed before the valve is in-service and relied upon.

MEMBER BLEY: Okay.

MEMBER KIRCHNER: But if it doesn't qualify, then what do you do? Go back to a conventional?

MR. HOUGHTON: We would have to make a design change to address that. And this is why we've been working with our vendors very closely for many years on this design.

1 MEMBER RAY: We were talking about turbine
2 missiles a little while ago, but the open item still
3 exists with regard to turbine missile effects on the
4 main steam system? It's 8.3-1.
5 MEMBER CORRADINI: That's a --
6 MR. HOUGHTON: Okay.
7 MEMBER CORRADINI: -- statement of fact,
8 not a question.
9 MEMBER RAY: Well, I meant it as a
10 question.
11 MEMBER CORRADINI: Oh, okay.
12 MEMBER RAY: I'm just --
13 MR. HOUGHTON: I'm not as --
14 MEMBER RAY: -- referring to the fact that
15 it says the staff cannot reach a conclusion regarding
16 the GDC 34 requirements, due to this open item. And
17 I just wondered what the status --
18 MEMBER CORRADINI: That's the open item we
19 discussed in Chapter 8 for --
20 MEMBER RAY: Right.
21 MEMBER CORRADINI: -- whether the Technical
22 Report specifications are met by the NuScale design
23 for non- 1E power.
24 MEMBER RAY: Okay. We don't need to divert
25 off into that, it's just part of the SER on this

1 section. I wanted to ask about it.

2 MR. HOUGHTON: Okay. Thank you.

3 MEMBER BLEY: The steam lines must be

4 suspended, it's hard to imagine you could run --

5 MR. HOUGHTON: Yes. So, the -- correct,

6 the main steam lines themselves, although, I will

7 again point out, the secondary main steam isolation

8 valves are located within our Reactor Building. And

9 the Reactor Building itself is our credit barrier.

10 They're also located in a separate area

11 from the main steam isolation valves themselves. So,

12 the secondary main steam isolation valves are on one

13 side of another wall that stands in-between our pool

14 and what we call our gallery space.

15 So, the main steam isolation valves and

16 secondary isolation valves are in separate areas. So,

17 they back up to each other in separate areas, which

18 provides additional defense-in-depth from a turbine

19 missile standpoint.

20 MEMBER SKILLMAN: Zack, let me ask this.

21 As you were describing the ball valve design, and the

22 seven-second actuation time, I was imagining the top

23 of the module, and I'm imagining that there's going to

24 be a fairly rigorous structure there that seismically

25 holds these isolation valves, their actuators, their

1 backup pneumatic or hydraulic accumulators. Ditto for
2 feedwater.
3 And this assembly of equipment is going to
4 be relatively complex and affixed to the top of the
5 module. Is that an accurate imagination of what's
6 going to be up there?
7 MR. HOUGHTON: Well, one -- and again,
8 we'll have more details when we bring Chapter 6 to
9 talk specifically about the design of these valves.
10 Yes, they will be seismically qualified.
11 MEMBER SKILLMAN: But this is steam side,
12 this is 10. We're not in the ECCS on 6, yet. So, I'm
13 talking about the plumbing side --
14 MR. HOUGHTON: Yes.
15 MEMBER SKILLMAN: -- for the steam
16 generators.
17 MR. HOUGHTON: So, 6 covers the containment
18 system and we have put these valves in the containment
19 system for our design.
20 MEMBER SKILLMAN: Oh, all right.
21 MR. HOUGHTON: So, that will cover the
22 actual details of the valve design and the controls.
23 I'll say, they are pneumatically actuated, they have
24 a nitrogen spring on them, that I think we discussed
25 a little bit during the Chapter 9 discussion

yesterday.

They are -- the hydraulic lines are used to vent, right? So, they are a hydraulic vent-to-open type valve. The controls for the hydraulic system are located in the Reactor Building gallery area, so near where those secondary main steam isolation valves are.

And I'll also say, the hydraulic skids for redundant valves are located in separate areas. So, as we're looking at this slide here, the hydraulic control skid that would close the main steam isolation valve on one steam generator is located in a separate area from the hydraulic control skid that would close the other main steam isolation valve.

MEMBER SKILLMAN: And the same for feedwater?

MR. HOUGHTON: Same for feedwater. And same for our primary isolations as well.

MEMBER SKILLMAN: Okay.

MEMBER BALLINGER: This figure is more of a cartoon, because there's got to be other piping and stuff. There's good news and bad news for ball valves, right? The good news is, they're ball valves. The bad news is, they're ball valves.

With a gate valve, you can't physically open it with a 500 PSI DP across, it just won't work.

1 With a ball valve, you can. You can open that at any
2 pressure.
3 And so, is that considered in the design?
4 Because you've got to be able to bypass these things
5 to equalize pressure and open them and stuff like
6 that. With a gate valve, you would have to do that.
7 MR. HOUGHTON: Yes.
8 MEMBER BALLINGER: Ball valve, not so much.
9 MR. HOUGHTON: Thank you, good question.
10 This is a simplified sketch, there are bypasses on
11 each of these valves.
12 MEMBER BALLINGER: I mean, there would have
13 to be.
14 MR. HOUGHTON: Yes.
15 MEMBER BALLINGER: But what I'm saying is,
16 from a safety point of view, if somebody doesn't
17 bypass, you can't open a gate valve. You have to be
18 Charles Atlas or something, right?
19 But with a ball valve, not so much. You
20 can just hit the switch and open it. Same thing with
21 loop valves and stuff like that, where you can get,
22 all of a sudden, a 500 PSI differential pressure, or
23 more than that, instantly, downstream of --
24 MEMBER BLEY: With the gate valve, it
25 depends a lot on the CD (phonetic) area width.

MEMBER BALLINGER: It's usually double-disc and you --

MEMBER BLEY: Yes, but if it's real broad and strong, a device can open them. If it's real narrow, you get really high stresses right where they --

MEMBER BALLINGER: Yes.

MEMBER BLEY: -- touch and nobody's going to open that.

MEMBER BALLINGER: Nobody.

MEMBER DIMITRIJEVIC: Did you consider, because we discuss here module movement a lot, in the different chapters, and here, did you consider in the module movement in the moving module hits operating module, what impact would be on the steam lines?

MR. HOUGHTON: So, I think your question is, did we consider what would happen when we're moving the module, the impact on the steam lines --

MEMBER DIMITRIJEVIC: Or that's considered in different chapter? I mean, the module could be dropped. And also, they consider in the Chapter 19 is actually module heating and operating module.

And I was just wondering, did you guys consider such a type of the accident and what would do to the steam lines coming out from the operating

module?

MR. HOUGHTON: So, I'm not sure what analyses specifically we have in our design certification or what we've done to address that. What I can say is that, again, we would have the thermal relief valves on the feed line, so that's protecting from a heat-up type event.

The operating procedures, we would expect that you would have some amount of air or nitrogen in those steam lines, they wouldn't be liquid-solid when you move them. We do have vent and drain connections on the line --

MEMBER DIMITRIJEVIC: I'm not concerned about module which is moving, I'm concerned about that module hitting an operating module.

MEMBER CORRADINI: I think what Vesna is asking is if you had module movement and the module that is moving hit a steam line of an operating module --

MEMBER DIMITRIJEVIC: Yes, it can hit --

MEMBER CORRADINI: -- is that what you're --

MEMBER DIMITRIJEVIC: It definitely can hit operating module, it's one of the accidents considered in the Chapter 19. I'm just wondering, did any

analysis look on impact on the steam lines? On operating module, not on the moving one.

MR. HOUGHTON: So, moving a module would not have an impact on the steam lines of an adjacently operating module --

MEMBER DIMITRIJEVIC: No, but when --

MR. HOUGHTON: -- just from moving by.

MEMBER DIMITRIJEVIC: -- it hits, it's like impact of the heavy module on the --

MEMBER BLEY: If it gets dropped.

MEMBER BALLINGER: In other words, can you have a steam leak?

MEMBER DIMITRIJEVIC: Steam line break.

MEMBER BALLINGER: Steam line break, because --

MR. HOUGHTON: If you had a moving module --

MEMBER BALLINGER: Yes.

MR. HOUGHTON: -- impact an operating module?

MEMBER DIMITRIJEVIC: Yes.

MR. HOUGHTON: I would assume that that would be one possible outcome of a module impacting an operating module. Again, in Chapter 19, we go through the full detail of a module drop and how that might

1 impact the -- what the impacts might be on multiple
2 adjacent units. So, that analysis would be covered in
3 Chapter 19.
4 MEMBER DIMITRIJEVIC: Well, this is why I'm
5 asking, because how it's covered didn't discuss at
6 all steam line break as a possible consequences. So,
7 I was wondering, do you see this as a possible
8 consequence? It's all right, we will address that in
9 Chapter 19.
10 MR. HOUGHTON: And of course, we do analyze
11 for steam line breaks, so it would be one --
12 MEMBER DIMITRIJEVIC: No, no, I know, but
13 separate steam line break.
14 MR. HOUGHTON: Okay. So, with that, I'll
15 move on to the condensate and feedwater system. The
16 feedwater system provides feedwater at the necessary
17 temperature, pressure, and chemistry to the steam
18 generator.
19 Consists of -- we walked through this in
20 the general summary. What I'll point out here on this
21 slide is that we have three feedwater and three
22 condensate pumps, each of them 50 percent capacity,
23 two normally operating and one on standby. That was
24 a decision to mitigate the impact of a loss of a
25 feedwater pump or condensate pump during operation.

1 And we also have three feedwater heaters,
2 as I mentioned earlier, but I'll point out, that's
3 three total feedwater heaters for the turbine
4 generator system, not three trains of multiple
5 heaters. So, it's three total heaters per plant.
6 Again, just speaking to the smaller size and
7 simplicity of the power conversion system.
8 So, Slide 15, we show the general layout
9 of the feedwater system. And again, I'll point out
10 here, the arrangement of the feedwater regulating
11 valves on the left side of this picture, and there are
12 actually backup check valves as well that are
13 downstream of those feedwater regulating valves.
14 We have a set per steam generator. And
15 these, again, are relied on as backup to the main
16 feedwater isolation valves. Also, they are located in
17 the Reactor Building, in a separate area from the
18 feedwater isolation valve itself.
19 MEMBER BLEY: Are they swing check valves?
20 MR. HOUGHTON: I'll have to double-check on
21 exactly what we said in our design certification. To
22 my knowledge, these would be nozzle checks. But I'm
23 not sure that we've specified that for these valves in
24 our application.
25 MEMBER BALLINGER: I forget what's in the

chapter, but the condenser tubing material and tube sheaths are what material?

MR. HOUGHTON: Specified to be stainless or higher grade.

MEMBER BALLINGER: Okay. So, it's not specified, at least stainless, is what you're saying?

MR. HOUGHTON: Your condenser tubing material would be site-specific. It will depend on what your site cooling water is. In a seawater application, where you're using ocean water, you may have different material than if you're using groundwater.

So, again, on the feedwater regulating valves and the backup check valves, these are non-safety-related. However, they are credited as backup for our safety-related isolations. They are tested per our in-service testing program and they are included within our technical specifications.

So, for feedwater treatment, we employ full-flow, we've designed for full-flow condensate polishing, recognizing the importance of feedwater chemistry for our steam generator, because we boil on the inside of the tubes in our once-through steam generator.

We use all volatile chemistry and we have

a -- there's a COL item for the actual chemistry program, but we expect to follow the PWR secondary water chemistry guidelines.

So, with that, I'll move on to the circulating water system. As I mentioned previously, there are two circulating water system, each providing cooling water to six main condensers. So, again, we go back to the overall site layout. Because our turbines are located on separate sides of the plant, we have separate circulating water systems that provide cooling to those condensers.

And again, the circulating water system would be very site-specific for the actual design, tower design, selection of pumps, pump sizes, et cetera. So, this is conceptual design information in our application.

MEMBER BALLINGER: This is just a thought, the EPRI water chemistry guidelines, are those -- all those guidelines are designed for recirculating steam generators, nuclear type steam generators.

Your steam generators are more fossil-related steam generators, where you boil on the inside of the tube. So, there's different kinds of, in the fossil industry, there's different kinds of control, other than the EPRI recommended guidelines. Have you

1 thought about that?

2 MR. HOUGHTON: We did do a thorough

3 evaluation of the EPRI guidelines against our steam

4 generator design. I do know we have our, I believe we

5 have our chemistry expert, Jon Muniga, on the line,

6 who may be able to speak a little bit more about that

7 evaluation.

8 MEMBER BLEY: Most of this stuff, you don't

9 learn by comparing, you learn by failures.

10 MEMBER BALLINGER: Pardon?

11 MEMBER BLEY: I said, most of these steam

12 generator problems, you learn by failures and

13 surprise.

14 MEMBER BALLINGER: No, I'm talking about

15 optional chemistry control schemes that you can use --

16 MEMBER BLEY: I understand that.

17 MEMBER BALLINGER: Yes.

18 MEMBER BLEY: What I hear Zack saying is,

19 well, they considered their materials and the EPRI

20 guidelines and it looks like it's pretty good. But if

21 you didn't look at what's going on in other places,

22 where you have steam inside the tubes, and what kind

23 of problems they've had, I'm not sure you picked the

24 right chemistry control. I'm agreeing with you.

25 MEMBER BALLINGER: Oh, okay. Because it's

690.

MR. HOUGHTON: I think we have our chemistry expert, who can speak a little bit more to the evaluation that we performed. Go ahead, Jon.

MR. MUNIGA: Okay. Jon Muniga, I'm the Senior Chemist for NuScale. We had EPRI out to Corvallis in July of last year to take a look at our design and take a look at the chemistry control. We're using the chemistry controls from the EPRI guidelines for the once-through steam generators.

Basically, the best that we've got, EPRI will evaluate our design against current guidelines and then, determine what differences are there that need to be addressed, and then, look at changing the guideline to go ahead and address those design differences.

But for their evaluation, they were happy with what we did, as far as the current guidelines. And again, as mentioned before, we are using alloy 690 steam generators, so that's going to drive our chemistry.

MEMBER BALLINGER: Thank you.

MR. HOUGHTON: All right. And then, the last system slide that we have --

MEMBER RAY: No, wait --

1 MR. HOUGHTON: -- is on the auxiliary --
2 MEMBER RAY: I'm sorry, I didn't --
3 MR. HOUGHTON: Sure.
4 MEMBER RAY: -- know that you were done
5 with that. There are many reasons why there would be
6 multiple unit shutdowns triggered. In this case, loss
7 of cooling water supply affects six modules, up to six
8 modules, at the same time. That's considered and
9 found to be acceptable, I trust?
10 MR. HOUGHTON: Yes, a loss of cooling water
11 would lead to a loss of -- the need to shut down six
12 modules. And that's something we've considered.
13 MEMBER RAY: Yes. Well, offsite power
14 would be up to 12. So, it's not a limiting condition,
15 but it's at least something that can be anticipated.
16 MR. HOUGHTON: Agreed. All right.
17 So, our last system slide today is on the
18 auxiliary boiler system. So, this provides steam to
19 some of the main steam users, when main steam is not
20 available.
21 So, that would be the gland seals, the
22 main condenser for de-aeration during startup, or for
23 condensate polishing regeneration. So, sort of your
24 standard industrial uses for steam in a power plant.
25 We also have a high pressure feed off the

1 auxiliary boiler system that provides steam to the
2 module heat-up system, which is a heat exchanger
3 connected to our chemical and volume control system,
4 which is what we use for heating up the primary during
5 startup. And it induces flow in the primary system,
6 because we don't have pumps.
7 MEMBER SKILLMAN: Zack, would you give us
8 a two-minute tutorial on startup with module heating?
9 So, let's say the module is dead cold, the pool is at
10 25 degrees C, it's at 70-75 degrees Fahrenheit. And
11 the operation teams says, go, we're going to start
12 Module 1. Would you explain how the module heating
13 system accomplishes that heat-up, please?
14 MR. HOUGHTON: I'll do my best for this
15 presentation, but I will also say, I know the members
16 are going to be out in Corvallis later this year, this
17 may be something we could walk through in more detail
18 --
19 MEMBER SKILLMAN: Okay.
20 MR. HOUGHTON: -- when you're there.
21 MEMBER SKILLMAN: It has to do with the
22 rate of heating on primary and secondary and how you
23 bring, ultimately, the module to where CVCS can take
24 over. I think that that's the construct, but I'm just
25 curious how the module heating system does this.

1 MR. HOUGHTON: So, the CVC system has a --
2 it provides flow above the core and it takes discharge
3 suction below the steam generators. So, in a startup,
4 we would get the plant into a configuration where we
5 can run our CVC system and start that flow loop of
6 CVC.
7 When it's time to heat-up, when we're
8 ready to heat-up, we will provide steam from the
9 auxiliary boiler system to the module heat-up heat
10 exchanger, which is in the flow line for the CVC
11 system.
12 So, that would heat up the CVC fluid that
13 is being injected into the reactor coolant system
14 above the core. So, that's putting a heat source in
15 in the riser of our reactor coolant system that is
16 above the core, low in the vessel.
17 We take discharge from below the steam
18 generators. So, this, putting heat in the circulation
19 center and taking discharge on the lower section of
20 the steam generator is what induces our natural
21 circulation flow. And so, that also starts to heat up
22 the system, because we're putting warmer CVC water
23 into the system.
24 Once we reach temperature is the point
25 where we would begin to go critical and start to

generate heat from the core itself. And at that point, we would be removing heat from --

MEMBER SKILLMAN: Is this a --

MR. HOUGHTON: -- the auxiliary boiler --

MEMBER SKILLMAN: -- 12-hour option? A 24-hour operation? A six-hour operation? What are we talking about here?

MR. HOUGHTON: Approximately 12 hours.

MEMBER SKILLMAN: Thank you.

MEMBER BROWN: Okay, one question. Your FSAR actually states that you use this, you also have to use this to initiate NC during shutdown as well. And what if you don't have it?

I mean, I thought this plant was supposed to automatically go into natural circulation somehow, if you shut down or had a scram or whatever the circumstances were.

Now, you've got just two high-pressure boilers as part of this ABS, as redundancy, I guess. But this seems to -- why isn't this safety-related, if this stuff is needed to initiate natural circulation when you shut down? I mean, shutdown is a shutdown, no matter how you get there.

MR. HOUGHTON: So, we would use this to maintain natural circulation during shutdown. That's

1 primarily beneficial for getting your primary system
2 chemistry in spec, you want to keep flow going through
3 your primary system. We don't rely on it, though, and
4 we analyze for failures of this system in Chapter 15.
5 We don't rely on it for any protective features.
6 I will also say, the auxiliary boiler
7 system has a connection to the main steam systems.
8 So, we don't rely on just the auxiliary boiler for
9 that purpose, we could use steam from adjacent units
10 as well to provide that heat. So, there's just an
11 added layer of defense for reliability of the system.
12 MEMBER BROWN: So, fundamentally, if you
13 shut down under any circumstance, it will
14 automatically initiate natural circulation and it will
15 go on even if your aux boiler system is not available,
16 period?
17 MR. HOUGHTON: You'll have natural --
18 MEMBER BROWN: It will go on forever?
19 MR. HOUGHTON: You'll have --
20 MEMBER BROWN: I'm just trying --
21 MR. HOUGHTON: It will slow down as you
22 cooldown, yes. But we don't rely on natural
23 circulation during our --
24 MEMBER BROWN: But it's --
25 MR. HOUGHTON: -- shutdown configurations.

1 MEMBER BROWN: -- sufficient to maintain
2 the satisfactory temperatures in that natural
3 circulation mode, as it cools down? You're not going
4 to run into an overheating? It can remove all the
5 heat you're required to remove?
6 MEMBER CORRADINI: I don't think he said
7 that.
8 MEMBER BLEY: I think Charlie's raising a
9 question about a casualty and I think you're answering
10 the question about a normal shutdown.
11 MEMBER BROWN: Yes, I'm addressing both of
12 them, actually. Yes, I mean, I wanted to make sure I
13 understood why it was necessary. The natural
14 circulation plants I've worked with, quite frankly,
15 when we shutdown, it just went into it and just went
16 on forever, we didn't need another system. It just
17 took care of itself.
18 (Simultaneous speaking.)
19 MEMBER BROWN: Well, the design
20 theoretically made sure that didn't happen and we
21 tested for it.
22 (Laughter.)
23 MEMBER BROWN: Not on the plants you're
24 familiar with, those were not, those would not do it.
25 MEMBER CORRADINI: We're just talking war

stories.

MR. HOUGHTON: Sure.

MEMBER BROWN: Yes.

MEMBER CORRADINI: Let's get back to his question.

MR. HOUGHTON: So, we do not rely on the module heat-up system to maintain flow for any of our transient events, or Chapter 15 type analyses.

MEMBER BLEY: But in normal operation, that's what you expect? Or even in casualty, you'd expect to do that?

MR. HOUGHTON: In normal operation, we would expect to maintain primary flow going with the module heat-up system.

MEMBER BROWN: But if it wasn't there, would you maintain primary --

MR. HOUGHTON: If it wasn't there, you would have some amount of primary flow, as long as you had decay heat being generated from the core.

MEMBER CORRADINI: Right, because you've got the DHRS, so that creates a flow loop.

MR. HOUGHTON: We have our operations expert, Ross Snuggerud here, who can maybe help with this one.

MR. SNUGGERUD: So, I'm just going to

1 repeat what Zack said, but maybe a little bit
2 different.
3 CO-CHAIR SUNSERI: Please provide your
4 name.
5 MR. SNUGGERUD: My name is Ross Snuggerud
6 and I'm an operations member of the NuScale staff. We
7 don't need the module heating system in shutdown
8 situations, even normal shutdown situations.
9 But if you have a protracted shutdown
10 situation, in which decay heat is low, either because
11 the reactor wasn't operated for very long or you've
12 been shut down for an extended period of time, the
13 decay heat system could be used to augment the natural
14 circulation flow and help with chemistry control and
15 other things of that nature.
16 MEMBER SKILLMAN: Ross, while you're still
17 up --
18 CO-CHAIR SUNSERI: Okay, thank you.
19 MEMBER SKILLMAN: -- let me pull on a
20 comment that Zack made, a surprising comment, but I'm
21 glad he raised it. I heard you say you can feed
22 module heating with your aux boiler. You can also
23 feed it with live steam.
24 But you can also tap into another module's
25 live steam. I think we'd better talk that through,

1 because this is the first time that I've heard the
2 notion of multi-module use for a different module.
3 And I would just submit, if Module 2 has
4 a weeper in fuel and has a very slow primary-to-
5 secondary and you tap Module 2 for Module 6, then you
6 need to find out which isotope came from which
7 reactor. And that will be a problem.
8 And so, I think that the terms of
9 engagement for crossing modules would be something
10 that NuScale would want to examine very, very closely
11 in their tech specs.
12 MR. HOUGHTON: And I'll say, we do have
13 monitoring, of course, on every steam system. And so,
14 that would be an operational --
15 MEMBER SKILLMAN: Well, hold on --
16 MR. HOUGHTON: -- decision that you would
17 need to --
18 MEMBER SKILLMAN: And your monitoring is on
19 your gland seal exhauster?
20 MR. HOUGHTON: We have monitoring on gland
21 seal exhaust. We have monitoring at the condensate
22 polishers. We also have monitoring on the steam lines
23 themselves. We do have a number of ways -- and of
24 course, there is chemistry sampling.
25 So, we would expect that the operators

1 would make a prudent decision on which steam system to
2 use in that scenario. It's a design capability that
3 we've included.
4 MEMBER SKILLMAN: I understand the value of
5 having the flexibility. I also understand the
6 consequence of cross-contamination and where that can
7 lead.
8 MEMBER BALLINGER: Let me say, I --
9 MR. HOUGHTON: Yes. We understand and
10 agree, it's an important aspect.
11 MEMBER BALLINGER: It's not just cross-
12 contamination, now, but from a safety analysis point
13 of view, you have a configuration where you have
14 operating module starting up another module and you've
15 got steam from an operating module being used to start
16 up the non-operating module. So, is that
17 configuration handled in the safety analysis? I'm
18 assuming so.
19 MR. HOUGHTON: That would be bounded by our
20 safety analysis, yes.
21 MEMBER BALLINGER: Okay.
22 MR. HOUGHTON: And this is all in the
23 outboard portions of the steam system.
24 MEMBER SKILLMAN: For this, we have a ball
25 valve.

1 MEMBER BALLINGER: For this, we have --
2 MR. HOUGHTON: And a backup.
3 MEMBER SKILLMAN: And a backup.
4 CO-CHAIR SUNSERI: Please continue, Zack.
5 MR. HOUGHTON: All right. So, from there,
6 we'll just cover, briefly, the COL items. I mentioned
7 we have COL items for steam generator, water
8 chemistry, the water chemistry program of the plant.
9 COL item for the plant programs, such as flow
10 accelerated corrosion monitoring.
11 COL item for determining the exact size of
12 spent resin tanks. And again, that's partly because
13 it's a little bit determined based on the chemistry
14 decisions that an individual plant makes based on
15 their site-specific conditions.
16 And then, the COL Item 4, the fuel supply
17 for the auxiliary boilers.
18 As we discussed previously, there is an
19 open item tied to Chapter 10. However, that open item
20 is in Chapter 8.
21 And on the final two slides, we have just
22 a summary of RAIs and their latest status as of the
23 time these slides were prepared. That concludes our
24 presentation. Are there any final questions?
25 CO-CHAIR SUNSERI: Members around the

table, any question? Joy, if you're on the line, do you have any questions for NuScale?

MEMBER REMPE: No, I am on the line and I appreciated the clarifications they provided. I'd like to request that Dennis and Harold make sure they're talking into the mic, it's very difficult for me to hear them.

MEMBER BLEY: We couldn't hear what you said, there, except Dennis and Harold.

(Laughter.)

MEMBER RAY: We need to get closer to the microphone, is what she said.

MEMBER REMPE: Thank you, that's what I said.

CO-CHAIR SUNSERI: All right. Well, if there's no further questions, we're at a transition point right here. We're doing well, we're ahead of time. So, I'd like to take, as we do the transition, let's take a 15-minute break. We'll reconvene at five 'til with the staff's presentation on Chapter 10.

(Whereupon, the above-entitled matter went off the record at 9:39 a.m. and resumed at 9:54 p.m.)

CO-CHAIR SUNSERI: All right, we're going to reconvene now with the staff presentation on Chapter 10. I'll turn it over to Omid.

1 MR. TABATABAI: Yes, good morning. Thank
2 you very much. I would like to start our
3 presentation, staff's presentation, on their safety
4 evaluation with open item for NuScale DCA Chapter 10,
5 Steam and Power Conversion System.
6 My name is Omid Tabatabai and I'm a senior
7 project manager in the Office of New Reactors, and the
8 lead project manager for this chapter.
9 I would like to ask my colleagues, who
10 will be presenting this chapter, to introduce
11 themselves please.
12 MR. VETTORI: Bob Vettori, NRO.
13 MR. STUBBS: Angelo Stubbs, containment
14 plant systems branch.
15 MR. MCMURRAY: Niko McMurray, materials
16 and chemical engineering branch in NRO.
17 MR. CHERESKIN: Alex Chereskin, chemical
18 engineer, NRO.
19 MR. TABATABAI: Okay. Today we will be
20 talking about various subsections in Chapter 10. If
21 you look at the agenda, we have organized our
22 presentation, not by the order of the sections, but by
23 the order of systems first, and then we will talk
24 about the materials aspects and chemical aspects of
25 those systems first. Later.

1 Before we get started, I'd like to
2 recognize our reviewers who performed the safety
3 review for this chapter. Just to start the
4 presentation, I would like to provide an overall
5 overview of the staff's evaluation.
6 Our safety evaluation report is based on
7 Revision 1 of the design certification application.
8 We issued 12 RAIs during review, which contained about
9 37 questions.
10 We don't have any open issues at this
11 time, but we have six confirmatory items. Since we
12 published our safety evaluation report, Revision 2 of
13 the design certification application was submitted to
14 the NRC. And NuScale has addressed all of those
15 confirmatory items.
16 So, with that, I would like to turn the
17 presentation to Angelo Stubbs, who's a senior reactor
18 systems engineer. And he will be talking about
19 various subsystems. Angelo.
20 MR. STUBBS: Okay, thank you, Omid. As
21 Omid mentioned, today we'll be presenting a summary of
22 the staff's review of NuScale Chapter 10. It's the
23 power conversion system chapter and it includes the
24 main steam system, turbine generator system,
25 condensate and feedwater system, and various other

1 supporting subsystems.

2 I'm going to start the presentation by

3 presenting the staff's review of the systems shown on

4 this slide here. So there's number systems, and we'll

5 start and move from top to bottom to the next.

6 So, that means we'll be beginning with the

7 turbine generator. As indicated on the slide in its

8 review of the turbine generator system, the staff took

9 into consideration specific design features of the

10 NuScale plant.

11 Including the fact that the turbine

12 generator system is not safety related and is not used

13 during or after an accident. And that there is no

14 important safety SSCs contained in the turbine

15 building.

16 However, the staff did recognize that

17 failure of the turbine generator system could result

18 in the ejection of turbine missiles that can

19 potentially impact SSCs outside of the turbine

20 generator building. Therefore, the staff's review

21 focused on compliance with GDC 4.

22 With this there's no open items and

23 there's no COL items associated with this.

24 Next slide. As I previously indicated,

25 the review of the turbine generator system is for

1 compliance of GDC 4.

2 On this slide I have listed the regulatory

3 basis, some applicable guidance and two acceptable

4 ways that GDC 4 compliance can be achieved.

5 The first way is to use favorable

6 orientation and turbine overspeed controls to reduce

7 the turbines missile generation probabilities. This

8 is the approach that we discussed in our guidance in

9 SRP 10.2.

10 The second way is to use barriers to

11 protect SSCs important safety from certain missiles.

12 Information related to this is contained in our

13 guidance in the Reg Guide 1.115.

14 NuScale, in its original application,

15 pursued the first method of this. But since then,

16 they have informed us that protection to SSCs

17 important to safety from turbine missiles will be

18 accomplished using the second method, the barrier

19 protection.

20 Next slide. Okay, on this slide there's

21 a summary of our review results. As indicated on this

22 slide, the staff reviewed information in Section 10.2

23 of the FSAR looking for compliance to GDC 4.

24 The results of the staff's review is,

25 because the turbine is not safety related and needed

1 for safe shutdown and that the turbine building
2 contains no important safety SSCs, that the only
3 potential threat from the SSCs, fit SSCs important to
4 safety, would result from a turbine failure that
5 results in generation of turbine missiles that could
6 affect areas outside the turbine building.
7 The applicant has indicated to us that all
8 SSCs important to safety would be housed in either the
9 reactor building or the control building. Which now
10 indicates they're providing protection against turbine
11 missiles. And using that as a way to satisfy in GDC
12 4.
13 Based on the reactor building providing
14 adequate barrier of protection, the staff finds that
15 they can accomplish the GDC 4 requirement.
16 As indicated on the last bullet, this is,
17 we're accepting this as their approach to complying
18 with GDC 4, but the ability of the reactor building to
19 serve as a barrier for protection against turbine
20 missiles, that review is still underway and is being
21 covered in Chapter 3, as they indicated earlier.
22 Okay. So, we'll move on to the next
23 slide. And now I'd like to summarize the staff's
24 review on the first five systems in 10.4.
25 And they are, the main condenser to

1 condenser air removal, turbine gland sealing system,
2 turbine bypass system and circulating water system.
3 Next slide. None of these system are
4 safety related. And all, except for the circulating
5 water system, are located entirely inside the turbine
6 building.
7 Portions of the circulating water system,
8 like the pumps, the cooling towers, are contained
9 outside the turbine building in that yard area of the
10 plant.
11 And none of these systems have piping
12 connections or safety related equipment or is relied
13 on for the safety, to perform safety related
14 functions, such as containment isolation.
15 And the systems have the potential to,
16 some of these systems, have potential for release of
17 radioactive effluents to the environments, but they
18 are monitored for release and can be controlled.
19 So you can see the list of GDCs that you
20 can consider when conducting these reviews. Not all
21 of them apply to each system but, in many cases,
22 multiple ones apply to the system.
23 Okay, next slide. So, just a quick
24 summary. On this slide we have the GDCs 2, 4 and 5.
25 Where they're included in our regulatory basis, that's

1 because the staff would like to confirm that they're
2 designed so that natural phenomena, like earthquakes,
3 impact of environment and dynamic effects, including
4 pipe breaks, were not adversely affect SSCs important
5 to safety.
6 GDC 5 addresses sharing of SSCs by module.
7 And when we're talking about effect, we're not
8 necessarily talking about effecting the SSCs that are
9 part of this system, but other SSCs that may be
10 important to safety.
11 The next slide. We included GDC 60 and 64
12 on some of these because they contain radioactive
13 effluents. And this is a regulatory basis associated
14 with the handling of radioactive effluents. And it
15 pertains to, primarily, the main condenser, the
16 condenser air removal and the turbine gland sealing
17 system.
18 Next slide. Okay, the staff reviewed the
19 systems using guidance in SRP, in the Sections 10.4.1
20 through 10.4.5.
21 When we looked for compliance to the
22 regulatory requirements and identified, and for the
23 ones that were applicable for this system. Not all
24 GDCs are applicable for each system.
25 But in our SER, the GDCs for each system

1 we specified was applicable for each system. So the
2 SER does identify specific GDCs for each of their
3 systems in 10.4.1 through 10.4.5.
4 Next slide. So, in summary, when we did
5 this, the staff found that design was in compliance
6 with all the applicable GDCs.
7 The main condenser, the condenser air
8 removal system, turbine gland sealing system and the
9 turbine bypass system performs no safety functions.
10 They're located inside the turbine building, which
11 contains no important safety SSCs. And failure of
12 these systems will not have a adverse impact on the
13 safety of the plant.
14 Additionally, discharging water, due to
15 circulating water system failure or main condenser
16 failure, if that was to occur, if the water will be
17 directed away from the areas of the plant that
18 contains the important safety SSCs and therefore the
19 staff found that the design was in compliance with
20 GDCs 2 and 4.
21 As for GDC 5, only the circulating water
22 system is shared among modules. And that sharing does
23 not result in any potential for a significant impact
24 of SSCs ability to perform their safety function.
25 The staff also found that for the main

1 condenser, the condenser air removal, the turbine
2 gland sealing and the circulating water system, that
3 to be in compliance with GDC 60 and 64, based on the
4 fact that the design revised for capability of
5 monitoring and controlling the release of
6 radioactivity.
7 And also, in compliance with 10 CFR
8 20.1406, based on it being, it adhering to the
9 guidance in Reg Guide 4.21.
10 Next slide. Okay, next I'd like to
11 summarize the staff review of the condensate and
12 feedwater system.
13 This system is similar to the condensate
14 and feedwater system for other PWRs. It's not safety
15 related, it's not used on accident.
16 But in order to assure DHRS, or the gate
17 heat removal system operation feedwater isolation is
18 required. And also, for containment isolation, the
19 feedwater isolation valves must close.
20 So those valves are safety related in our
21 Seismic I. And even though they weren't included in
22 the system as the system boundaries was drawn for the
23 condensate and feedwater system, we did look at it.
24 And like I said, they were designed to Seismic I and
25 they are safety related.

1 So, there was no COL items associated with
2 this. And we don't have any open items associated
3 with this.
4 So, next slide. This slide shows the
5 applicable regulations for the system. Just one point
6 here, GDCs 45 and 46 I feel is relevant.
7 It appears in the Rev 1 of the NuScale
8 application, but in Revision 2 NuScale removed their
9 revisions. Removed this, each GDCs.
10 I feel since the modules are connected,
11 disconnected and removed every time there's refuel, I
12 think that inspection and testing of SSCs required for
13 system isolation if necessary. So, we included the
14 GDC 45 and 46 when we reviewed it to look at those
15 aspects of the operation of the system.
16 NuScale, based on where they're drawing
17 their boundaries, do not even include those SSCs as
18 part of the system, instead, they include it as part
19 of the containment system, which is Chapter 6.
20 But, again, we're looking at the operation
21 of the system. We're following the flow of the
22 system. And the boundaries that were selected doesn't
23 necessarily let us look at functionally how the system
24 works if we just work with those boundaries.
25 Next slide. Okay, so we reviewed the

1 condensate and feedwater system for compliance with
2 the GDCs that was listed.
3 And we used guidance that our DSRS, design
4 specific review standard, which, again, identifies
5 different boundaries than NuScale identified. But I
6 think that's more of what, like I said, what they used
7 for their purposes. But for the purposes of actual
8 reviewing, we were able to look at everything.
9 We found that the isolation, feedwater
10 isolation valves that perform safety functions were in
11 compliance with GDCs 2, 4, 5, 45 and 46. And
12 additionally, we found that the condensate feedwater
13 system was, complies with 10 CFR 20.1406.
14 Next slide. Okay, finally, I'd like to
15 summarize the staff review of the auxiliary boiler
16 system. And that's Section 10.4.10 of the FSAR.
17 The auxiliary boiler system applies steam
18 to the module heat up system. Which is used primarily
19 for startup. I guess there is some other instances
20 where they're extended, shutdown. They may be used in
21 that.
22 But a system is similar to that when
23 you're warming up and starting up other PWRs in that
24 it's not safety related and it's not used during or
25 after the accident.

1 The failure to aux boiler systems are
2 accounted for and considered in the module heating
3 system interface. So, it supplies steam to their
4 module heating system, heat exchanger, but the module
5 heating system is a subsystem of the CVCS system.
6 The aux boiler system failure does not
7 result in any new design basis event and does not
8 affect safety related nuclear power module functions.
9 So the next slide. Okay. So the slide
10 shows applicable regulations for this system, is
11 similar to regulations that we see for other systems.
12 Since we're not looking for the systems
13 performance intended function, but we're making sure
14 that the system won't fail in a way where it has an
15 adverse impact on another system or results in
16 release, uncontrolled release of radiation.
17 Next slide. So, when we, we've conducted
18 a review, we basically came to the conclusion that
19 auxiliary boiler system was in compliance with the
20 GDCs 2, 4, 5, 60 and 64. And additionally, it was
21 designed so, to meet 10 CFR 20.1406 by being, by
22 following the guidance of Reg Guide 4.21.
23 And that concludes my portion of this
24 presentation. Any questions?
25 MEMBER BLEY: I have just one.

1 MR. STUBBS: Okay.

2 MEMBER BLEY: As NuScale, you pointed out
3 that turbine missiles will be considered, the barriers
4 will be considered in Chapter 3. And that they're not
5 looking at the probability of the event, they're
6 focused on the barrier protection.

7 I've glanced through Chapter 3 and don't
8 find enough there to be convincing, so when you come
9 in about Chapter 3, I hope you will have ensured that
10 there's analysis that really looks at the maximum
11 energy missiles and have played that against the
12 strength of the barriers. Rather than just a claim
13 that they're protected because of the barrier.

14 MR. STUBBS: Right. As --

15 MEMBER BLEY: You don't need to answer.

16 MR. STUBBS: No, I was just going to say,
17 as indicated on the slide, Chapter 3 is still ongoing
18 and that there are structural people, and our people
19 who are looking at turbine missiles in Chapter 3 are
20 looking at that.

21 But, right, this is sort of contingent
22 that they make the case in Chapter 3 because, what was
23 previously in Rev 1 was removed in Rev 2 of the
24 application. So any information on the turbine
25 overspeed that used to be there was removed.

1 And everything is based on them meeting
2 the requirements to satisfy the Reg Guide 1.115. And
3 being able to credit the reactor building and the
4 turbine, and the control building for protecting the
5 SSCs important safety contained in them. And I do
6 understand that.
7 MR. TABATABAI: But just to add, Dr. Bley,
8 we have Chapter 3 project manager in the audience, so
9 she specifically attended to make sure things that you
10 need for that --
11 MEMBER BLEY: Okay.
12 MR. TABATABAI: -- in this area, to be
13 addressed.
14 MEMBER BLEY: At least I think the
15 applicant has to provide a pretty sophisticated
16 analysis to be convincing on that issue.
17 MR. TABATABAI: Yes. We still have a lot
18 of work to do in that area.
19 MEMBER KIRCHNER: Similar one, Omid, is
20 the secondary steam isolation valve. So the
21 evaluation of their seismic capability, and there's
22 noted in the figure that was presented by NuScale this
23 morning, also a seismic anchor at the feedwater
24 entrance to the reactor building.
25 So you'll be looking at those matters in

1 Chapter 3?

2 MR. TABATABAI: I would assume so. I

3 can't answer the question --

4 MEMBER CORRADINI: I'm --

5 MR. TABATABAI: -- being sure --

6 MEMBER CORRADINI: I'm guessing that it

7 would be Chapter 6, steam isolation --

8 MR. STUBBS: Well, I think the isolation,

9 they're looking at it in Chapter 6 for the isolation

10 valve.

11 MEMBER CORRADINI: Right.

12 MR. STUBBS: But they're also, they also

13 look at pipe hazards analysis in Chapter, what was, 3,

14 I think, also. So, the area where those SSCs are

15 contained would be also looked at there.

16 MR. TABATABAI: We can find out exactly,

17 answer to your question. Are we ready to move on to

18 10.3?

19 CO-CHAIR SUNSERI: Yes.

20 MR. TABATABAI: Bob.

21 MR. VETTORI: I'll go ahead and discuss

22 the status review of Section 10.3, main steam system.

23 These are the GDCs we reviewed to, GDCs 2, 4 and 5.

24 And I'm sure you're very familiar with them by now.

25 Next slide please. Also, GDC 34, I'll get

1 into that. I'm sure you're going to have a question
2 on that one.
3 And next slide please. Okay. We reviewed
4 this section using the NuScale design specific review
5 standard, 10.3 main steam supply system.
6 So, NuScale defines the main steam system
7 as only the portions from the flanges immediately
8 downstream of the containment system. Main steam
9 isolation valves up at the turbine stop valves.
10 As you can read, as you read earlier in
11 our SE, that we performed the review consistent with
12 the system boundaries defined in the NuScale DSRS
13 10.3. So, outlet of the reactor pressure vessel steam
14 plenum on the secondary side of the steam generators,
15 up to and including the turbine stop valves.
16 ITAAC for portions of the safety related
17 structure systems and components of the main steam
18 system are located in Part 2, Tier 1. Our evaluation
19 of tech specs are in Chapter 16 of this SER.
20 No combined license information items
21 associated with the main steam system. We did ask
22 five RAIs. All are closed and resolved.
23 And our conclusion was the main steam
24 system for the NuScale design satisfies the relevant
25 requirements described in the previous slides

1 regulatory basis. Are there any questions?
2 CO-CHAIR SUNSERI: So I guess, maybe I'm
3 confused, but it seems like when I read through the
4 SER there was an open item on this GDC 34, but it
5 related back to Chapter 8. It looks like you're just
6 holding that against Chapter 8 and we'll look at it
7 there instead of here?
8 MR. VETTORI: That is correct.
9 CO-CHAIR SUNSERI: I think the only issue
10 was the integrity of the piping for this chapter,
11 right, and you've concluded that that's sufficient?
12 MR. VETTORI: Yes, sir, that is correct.
13 CO-CHAIR SUNSERI: Okay. All right, I'm
14 good. Thank you.
15 MR. TABATABAI: Okay, our next presenter
16 is Nicholas McMurray.
17 MR. MCMURRAY: Hello everyone. I'm here
18 to discuss the steam and feedwater materials. I'm
19 quickly going to discuss regulatory basis and the
20 guidance that's applicable and the go more into the
21 scope and the details.
22 So, for the regulatory basis, primarily --
23 CO-CHAIR SUNSERI: Can I interrupt you for
24 a second? I'm having a hard time hearing you, can you
25 adjust the mic a little bit?

1 MR. MCMURRAY: Better? All right.
2 CO-CHAIR SUNSERI: Yes.
3 MR. MCMURRAY: So, primarily the
4 regulatory basis is GDC 1 and GDC 35. A quick note on
5 GDC 35, which is emergency core cooling. That's from
6 the SRP.
7 Since the scheme and feedwater material is
8 downstream of the isolation valves, are upstream to
9 the feedwater isolation valves, do not perform a
10 safety function, that GDC is not applicable for what
11 my scope of review was.
12 Other applicable requirements are Appendix
13 B, Criterion 8, for a cleanliness control. As well as
14 50.65, which is the maintenance rule.
15 Next slide. Related to the review
16 guidance, us the SRP, Section 10.3.6 and applied it to
17 NuScale's design.
18 In addition, generic letter 89-08, which
19 is related to flow accelerated corrosion or erosion,
20 corrosion, as well as the EPRI guidance in report
21 NSAC-202L, Revision 3, which is also related to flow
22 accelerated corrosion.
23 Next slide. So, staff's review, similar
24 to how NuScale defined their main steam and feedwater
25 systems, focused on the non-safety related portions.

The safety related portions, including the isolation valves that are part of a CNTS, the containment system, that was reviewed in Section 6.11. And then the specific steam generator materials is reviewed in the steam generator material section.

So as was reviewed in Chapter 3, non-safety related, main steam and feedwater materials are Quality Group D. And they're designed to ASME B31.1.

The NuScale also stated that the design meets the guidance of the generic letter in the EPRI report related to flow accelerated corrosion.

Next slide. So, to capture this, when NuScale completes their design and COL item, they committed to following, or the COL applicant, will commit to following the guidance in the generic letter and the EPRI report when they come in for a COL review.

There are a couple of confirmatory items, which is related to clarification. Essentially related to flow accelerated corrosion, for that being the main purpose of Chapter 10.3.6.

Scoping that 10.3.6 is related on the non-safety portions as opposed to 6.11 for the safety related portions, and then controlling contamination for anything downstream in the non-safety related

portions to ensure that it doesn't impact the safety related isolation valves decay heat removal system or the steam generator system.

MEMBER SKILLMAN: Nicholas, back to Slide 31 please.

MR. MCMURRAY: Yes.

MEMBER SKILLMAN: What isn't designed to B31.1?

MR. MCMURRAY: Everything downstream of the disconnect flanges is B31.1. Upstream of that is designed to either ASME Section 1 or Section 3, depending on the isolation valve, or the main steam isolation valves are Class 1.

MEMBER SKILLMAN: You're putting a capital A in all. You got some valves there, are they B31.1?

MR. MCMURRAY: Everything downstream from the disconnect flange is --

MEMBER SKILLMAN: The valves are B31.1?

MR. MCMURRAY: My understanding is yes.

MEMBER SKILLMAN: Do you have any pumps?

MR. MCMURRAY: Say that again?

MEMBER SKILLMAN: Do you have any pumps?

MR. MCMURRAY: NuScale can clarify if they're section, I'm pretty sure the downstream of the disconnect flange is B31.1.

1 MEMBER RAY: Weren't you talking about
2 pressure valves in here?
3 MEMBER SKILLMAN: Yes.
4 MR. MCMURRAY: Yes.
5 MEMBER SKILLMAN: I'm wondering, to me
6 it's a foolish question, but it's one that is
7 confusing me. B31.1 is a piping code. There is a lot
8 of other equipment down there, and it's not all
9 piping.
10 MR. MCMURRAY: Primarily, the scope of
11 10.3.6 was looking at the piping related to flow
12 accelerated corrosion.
13 MEMBER SKILLMAN: Okay. Thank you.
14 CO-CHAIR SUNSERI: So, during the NuScale
15 presentation I understood that material section for
16 the secondary could vary, depending on where the plant
17 was located. If it was a seawater plant it might be
18 different materials. Likely would be different
19 materials than --
20 How did you recognize that in your
21 materials evaluation?
22 MR. MCMURRAY: So, related to the flow
23 accelerated corrosion and the piping within the EPRI
24 guidance in the generic letter, it states to select,
25 depending how you design the materials, you can either

1 have a more thorough inspection and monitoring for
2 flow accelerated corrosion or if you design the
3 materials such as stainless steel that's immune to
4 flow accelerated corrosion, you can pull back and do
5 less.
6 So, NuScale, by committing to following
7 the guidance in the EPRI report, it's able to
8 reconcile that and make that finding. That depending
9 how they perform their design in the COL stage, that
10 will impact how the flow accelerated corrosion program
11 is.
12 CO-CHAIR SUNSERI: So, I haven't looked at
13 those EPRI guidelines in a long time, Ron. I mean,
14 would that cover --
15 MEMBER BALLINGER: Yes. I mean, my
16 question originally was for condenser materials.
17 MR. MCMURRAY: Yes.
18 MEMBER BALLINGER: Not for the secondary
19 piping.
20 MR. MCMURRAY: Right.
21 MEMBER BALLINGER: But I'm sure the
22 secondary piping will be, the flow accelerated
23 corrosion program will be very easy because the new
24 materials will not be susceptible to flow accelerated
25 corrosion --

1 MR. MCMURRAY: Yes. For example, if
2 NuScale would select a stainless for their non-safety
3 related portions, they could create that in a
4 different way than if they would select a low alloy
5 steel. Or something in between, such as a chromoly
6 steel, which is also an option or use. So, yes.
7 MEMBER BALLINGER: And it's usually that
8 two and a quarter chrome or less.
9 MR. MCMURRAY: Yes.
10 CO-CHAIR SUNSERI: Thank you.
11 MR. MCMURRAY: You're welcome. Any other
12 questions? All right, I'll turn it over to Alex.
13 MR. CHERESKIN: Sure. My name is Alex
14 Chereskin and I'll be presenting the staff's review of
15 the secondary water chemistry program, the condensate
16 polishing system and the feedwater treatment system.
17 Next slide. So, the regulatory basis used
18 to review these sections was 10 CFR Part 50, Appendix
19 A, general design criteria in 14 as it relates to
20 maintaining the integrity of the reactor coolant
21 pressure boundary.
22 Next slide. So, to review these sections,
23 the staff used guidance in the standard review plan,
24 including Sections 5.4.2.1, 10.4.6 and branch
25 technical position 5-1.

1 Additionally, the staff used the EPRI PWR
2 secondary water chemistry guidelines. Those are used
3 to compare water chemistry parameters as they apply to
4 once through steam generators. And also considering
5 the Alloy 692 heating material the applicant is
6 proposed to use.
7 And the staff also used NEI 97-06, the
8 steam generator program guidelines. Insofar as they
9 reference the EPRI PWR water chemistry guidelines.
10 So the staff's review of these sections,
11 the condensate polishing system, the feedwater
12 treatment system, are not safety related and don't
13 perform a safety related function. These systems are
14 designed to clean and treat the feedwater in order to
15 remove corrosion products and ionic impurities.
16 And they are designed also to control the
17 secondary water parameters to values consistent with
18 what is described in the EPRI guidance. The feedwater
19 treatment system is there to provide chemical
20 additional and feedwater sampling, for things such as
21 PH controllers and oxygen scavengers.
22 Next slide. So, in these sections there
23 are three COL items. The first one is to develop a
24 site-specific chemistry control program. Again, based
25 on the EPRI PWR water chemistry guidelines.

1 The second items is to determine the size
2 and number of new and spent resin tanks for the
3 condensate polishing system.
4 And the third COL item is to provide a
5 secondary water chemistry analysis to show that the
6 things like the size, material and capacity of the
7 feedwater treatment system will be able to satisfy the
8 requirements of the secondary water chemistry program,
9 described in Section 10.3.5.
10 MEMBER BALLINGER: I ask this question to
11 most everybody when we talk about this. I don't
12 expect you to know the answer, but I expect you, if
13 you go and find out you'll be surprised.
14 The condensate polishing system is
15 designed to cleanup what amounts to be normal
16 feedwater. If you have a condenser tube failure on a
17 seawater site, how long will those condensate
18 polishers last, do you have an idea?
19 MR. CHERESKIN: I do not.
20 MEMBER BALLINGER: Just ballpark, plus or
21 minus a year.
22 (Laughter.)
23 MR. CHERESKIN: I do not have an idea, but
24 it will --
25 MEMBER BALLINGER: It's minutes.

1 MR. CHERESKIN: -- not be long. Yes.
2 MEMBER BALLINGER: It's minutes.
3 MR. CHERESKIN: I'm sure. Okay. So, this
4 slide here includes a confirmatory item for Section
5 10.4.1.1. However, the applicant has provided
6 information in Revision 2 of the design certification
7 that closes this confirmatory item. So that's no
8 longer open.
9 So that being said, there are no open or
10 confirmatory items for any of the sections presented
11 here. And the staff review determined that these
12 three sections for secondary water chemistry, the
13 condensate polishing system and the feedwater
14 treatment system meet the applicable regulatory
15 requirements outlined earlier in the presentation.
16 Are there any other questions?
17 CO-CHAIR SUNSERI: So then, that concludes
18 you all's presentations?
19 MR. TABATABAI: That's correct. That this
20 concludes our presentation for Chapter 10.
21 CO-CHAIR SUNSERI: Okay. So, I'll go look
22 at the Members at the table. Any additional questions
23 for the staff on this topic?
24 Joy, do you have any questions for the
25 staff on this topic?

1 MEMBER REMPE: No, I do not. Thanks for
2 asking.
3 CO-CHAIR SUNSERI: All right. So we're
4 going to close, well, we're going to release you. And
5 as long as the NuScale Chapter 11 folks are ready,
6 we'll do a transition right now and go into that. And
7 they are, and we will.
8 (Off-microphone comments.)
9 CO-CHAIR SUNSERI: Okay, if I could have
10 everyone's attention? Charlie? Vesna? Charlie?
11 We're ready to go.
12 (Laughter.)
13 CO-CHAIR SUNSERI: All right.
14 MEMBER BROWN: You got to tell Vesna to
15 quit asking me questions.
16 CO-CHAIR SUNSERI: Right.
17 (Laughter.)
18 CO-CHAIR SUNSERI: Okay, so we are ready
19 to begin with the NuScale presentation on Chapter 11.
20 They'll start with Chapter 11, and we're just going to
21 roll right into Chapter 12, depending on how the time
22 flows.
23 I'll continue to shepherd the agenda
24 through here, but Dr. Chu is the technical lead on
25 this topic so ask her all the hard questions, okay.

1 All right, go ahead NuScale.

2 MR. OSBORN: Good morning. My name is Jim

3 Osborn, licensing specialist for Chapters 11 and 12.

4 I'll be presenting Chapter 11 this morning.

5 The members of my team here are listed

6 there. I'll let them introduce themselves.

7 MS. FOSAAEN: Carrie Fosaaen, licensing

8 supervisor for Chapter 11 and 12.

9 MR. ROYAL: Mark Royal, instrumentation

10 and controls.

11 MR. SHAVER: Mark Shaver, supervisor of

12 radiological engineering.

13 MR. BRISTOL: Jon Bristol, health

14 physicist of radiological engineering.

15 MR. OSBORN: All right. The next two

16 slides are the acronyms that are used in this

17 presentation, so you can refer to those as needed.

18 So, this is a summary of the RAIs that we

19 have been busy answering the last couple of years.

20 You can see them listed for both Chapters 11 and 12.

21 And so, we will try in these presentations

22 to discuss the, and focus on the differences that may

23 be different than what you're used to seeing in a

24 typical large PWR.

25 And so, for that reason Chapter 11 may

extend a little longer than Chapter 12, just based on the number of differences that exist there.

So, Chapter 11 is the radioactive waste management chapter. You can see the sections here. I will note, that all these sections are also in the standard review plan, except for the last one, 11.6. Which was added to the NuScale design specific review standard.

And so, that was added to our review and so we will discuss that, of course, at the end. We'll take these sections by, as they come.

So, the first section, 11.1, pertains to source terms. Primary and secondary coolant source terms and the methodology that we use to develop that.

Each of these source terms, we have both the primary coolant and the secondary coolant source terms and we have a design basis source term and a normal effluent source term associated with each.

Each of these source terms is developed using three different components. The water activation products, corrosion activation products and fission products.

First, the water activation products. We calculated and determined, by use of first principles. We actually calculated the production of tritium,

carbon-14, nitrogen-16 and argon-41, due to the coolants, the water coolant exposure to the reactor core neutron flux.

It should be noted that the water activation product of argon-41 was created as a tracer isotope as we may need to inject natural argon into the primary coolant, due to tech steam generator tube leaks, in the case that the radioactive concentration, the primary coolant, would be too low under normal operations.

And so, we have the provision to inject argon to create an activation, argon-41, to detect tube leaks. Because the natural circulation low flow rate, nitrogen-16, will have decayed away by the time it gets to the steam lines. And so that doesn't become a viable isotope to use for tube leak detection.

Both the water activation products and the corrosion products, the concentrations will be the same for both the design basis source term and the normal effluents source term. The exception to that would be argon-41 where we assumed a different injection rate for the design basis source term.

So, the corrosion activation products were developed using the ANSI Standard 18.1. And this ANSI

1 standard uses plant operating data from the 1990s,
2 which I think the industry has since approved upon, as
3 is reflected in the recent revision to the ANSI
4 Standard 18.1.
5 So we think that those source terms are
6 conservative based on current buffering practices.
7 And finally, the fission products were
8 developed, again, from first principles using the fuel
9 isotopic inventory and fuel escape rate coefficients
10 to determine the amount of fission products that leak
11 into the primary coolant.
12 Next slide.
13 DR. SCHULTZ: One question, Jim.
14 MR. OSBORN: Yes, sir.
15 DR. SCHULTZ: On the corrosion activation
16 products, what was the basis for not assuming
17 something more conservative for the design basis
18 assumption with regard to crud activation?
19 MR. OSBORN: You mean, as opposed to the
20 normal effluent source term?
21 DR. SCHULTZ: Yes.
22 MR. OSBORN: Yes. So, again, the
23 regulatory guidance provided on that doesn't
24 distinguish between, it all uses the ANSI standard.
25 And so, the ANSI standard doesn't distinguish between

1 different levels of source term between the normal
2 effluent and the design basis.
3 DR. SCHULTZ: Thank you.
4 MEMBER BALLINGER: Does the industry data
5 distinguish between and allow-600 and a alloy-690
6 pant, because the ANSI standard in 1999 were almost
7 all alloy-600 plants.
8 MR. OSBORN: No.
9 MEMBER BALLINGER: And that's 80 percent
10 of the primary to secondary boundary.
11 MR. OSBORN: So, related to crud
12 activities?
13 MEMBER BALLINGER: Yes.
14 MR. OSBORN: Or crud isotopes? The, no,
15 the ANSI standard doesn't distinguish --
16 MEMBER BALLINGER: Yes.
17 MR. OSBORN: -- between what type of steam
18 generator you have. It distinguish --
19 MEMBER BALLINGER: Industry experience,
20 industry experience might.
21 MR. OSBORN: So there might be, if you
22 segregated the data, you might get different numbers,
23 yes. The only way the ANSI standard segregates that
24 is steam generator type. If it's a once through or u-
25 tube.

1 MEMBER BALLINGER: Okay.

2 MR. OSBORN: Okay. So, continuing on with
3 the source term methodology. So the NuScale design is
4 different enough from the typical lightwater large
5 reactors that the empirical source term data from the
6 1980s and 1990s is, as represented in the, both the
7 ANSI Standard 18.1 and NUREG-17, cannot always be
8 used.

9 So therefore, we have used first
10 principles where appropriate, operational experience
11 where available, or applicable, and then lessons
12 learned where available.

13 So, for example, we mentioned the water
14 activation products, we used the classic nuclear
15 reaction rate equation to develop the water activation
16 source terms as the target atoms flow through the
17 neutron flux in the core.

18 So you may be familiar with that equation.
19 But that's just how we calculated water activation
20 using first principles.

21 All right. The fission products component
22 of the source term, again, we also used first
23 principles by calculating the core inventory. The
24 isotopic inventory using scale, to a maximum burn up
25 of 60 gigawatt days per metric ton.

1 And so, for the release of these fission
2 products, from the fuel to the coolant, we used
3 operational experience through the use of a reduced
4 failed fuel fraction. So, the typical fail fuel
5 fraction used in the regulatory guidance is a quarter
6 percent failed fuel.
7 We used industry information, industry
8 data, that reflected large industry effort, especially
9 in the last ten years, probably in the last 20 years,
10 to reduce fuel failures. And so we took advantage of
11 that.
12 Which all this industry data, of course,
13 is with force flow plants. And so, NuScale being a
14 natural circulation plant, we would expect even better
15 performance.
16 So, the operational experience is also
17 utilized in developing the crud aspect of the source
18 term as the, like I said, through the data used in
19 ANSI 18.1. There is no first principles method for
20 calculating crud concentrations in the coolant.
21 And then the lessons learned were
22 incorporated through the use of EPRI guidelines. And
23 then the material design philosophy that minimizes the
24 use of cobalt.
25 DR. SCHULTZ: So by this you mean

conservative with respect to industry experience, what has been associated with the guidance in the past?

MR. OSBORN: That's correct.

DR. SCHULTZ: Okay, thank you.

MR. OSBORN: Yes, sir. All right, continuing on with a more detailed look at fission products.

We assume, again, assumes a reduce, yet we believe still conservative .0066 percent failed fuel rate. And we also refer to this as 66 rods per million as an industry unit for that metric.

So, we demonstrate this as conservative by, as comparing to the actual 2016 industry average failure rate of only four rods per million for the operating fleet. So, industry, also it shows us that upwards of 95 percent of current U.S. lightwater reactors actually run defect free.

So this shows, I think, that the U.S. commercial industry, nuclear industry, has performed very well in reducing fuel pin failures over the last several decades, since the 1970s.

So, industry data also shows that most of these failed fuels, failed fuel pins, are as a result of either grid-to-rod fretting or debris induced failures. Which is a result of the high coolant flows

1 that tend to reduce these vibrations and mechanisms.
2 So, NuScale being a natural circulation
3 plant has a very, much lower flow. And so it tends to
4 alleviate these failure mechanisms.
5 MEMBER SKILLMAN: But, Jim, why wouldn't
6 the lower flow bring its own unique failure modes?
7 So you're right, for the higher velocity,
8 fretting the spacer grids, you get wire debris up in
9 the fuel assembly and over the course of the fuel
10 cycle you get a pit or a hole or whatever. So that
11 explanation is understandable for the higher
12 velocities.
13 But in your case, you've got very, very
14 low velocities. Can it be that you can get a kernel
15 of debris that simply parks itself and festers and
16 therefore it creates a different type of fuel failure?
17 MR. OSBORN: So --
18 MEMBER SKILLMAN: So, I think your banking
19 on operating experience as the basis to say, number
20 one, we're not going to have fretting and we're not
21 going to have, if you will, grid pin failures, and I
22 can understand the argument.
23 But your argument doesn't seem to look at
24 the other side, which is, we've got a very slow
25 migration of natural circulation and therefore there's

1 no cleansing effect in the channel. And whatever
2 might be down in that channel can infect the grid, the
3 fuel pin coupling.
4 MR. OSBORN: So, are you suggesting that
5 there could still be debris that gets suspended, gets
6 caught in a grid strap and rests against the fuel pin
7 and then --
8 MEMBER SKILLMAN: That's exactly what I'm
9 saying.
10 MR. OSBORN: So, yes, that's --
11 MEMBER SKILLMAN: Can there be another
12 mechanism that hasn't manifested itself --
13 MEMBER BLEY: Because of the higher flow.
14 MEMBER SKILLMAN: -- because of the higher
15 flow?
16 MR. OSBORN: So, I mean, that's the
17 classical example of what happens for a debris induced
18 failure, right?
19 You get some small piece of debris that
20 gets caught up in a grid strap next to a fuel pin and
21 it will just machine a hole --
22 MEMBER SKILLMAN: Yes, for higher flow
23 rates. I got that.
24 MR. OSBORN: And so a lower flow, so one
25 --

1 MEMBER SKILLMAN: It won't do that.
2 MR. OSBORN: It won't, that's right. So
3 --
4 MEMBER SKILLMAN: But is there another
5 mechanism --
6 MR. OSBORN: Well --
7 MEMBER SKILLMAN: -- that exists because
8 of that?
9 MR. OSBORN: So, we don't know what we
10 don't know, right?
11 And so, only operational experience would
12 tell us that. So that's why we do, still use a fail
13 fuel rate that is --
14 MEMBER SKILLMAN: Times ten.
15 MR. OSBORN: That's what?
16 MEMBER SKILLMAN: It's times ten.
17 MR. OSBORN: Well, so we have two
18 different fail fuel rates. One for normal effluents
19 source term, one for design basis source term.
20 And so the normal effluent source term
21 uses a fail fuel rate that is conservative for the
22 last ten years of NuScale's, or for industry's
23 experience. So, we think that's still conservative,
24 even for a force flow plant.
25 And so --

1 MEMBER REMPE: This is Joy, I just have
2 some clarification.
3 MR. OSBORN: Yes.
4 MEMBER REMPE: Are you using the same
5 value as used by the LWR instance?
6 CO-CHAIR SUNSERI: You're cutting out,
7 Joy.
8 MR. OSBORN: Yes, Joy, you're cutting out,
9 can you be very close to the phone?
10 MEMBER REMPE: Okay, I'm very close to the
11 phone. Just to clarify, the number you're using is
12 the same that's used by the commercial industry, is
13 that true?
14 MS. FOSAAEN: Is it the same value as
15 commercial industry.
16 MR. OSBORN: Oh. No, no. Yes, okay. So,
17 no. No, the value that we're using is not what's
18 traditionally and historically been used by other
19 applicants. That's why we're saying that we're using
20 and taking advantage of operational experience over
21 the recent decade that --
22 MEMBER REMPE: So how much difference is
23 it, is what I was trying to get to.
24 MR. OSBORN: Okay.
25 MEMBER REMPE: You're taking credit for

1 the unknown, you think it's better, have you gone a
2 factor of ten lower, a factor of 100 lower, how big is
3 this difference?
4 MR. OSBORN: Yes, so I'll let Mark Shaver
5 --
6 MR. SHAVER: Yes, this is Mark Shaver, I
7 want to jump in here. So the quarter percent failed
8 fuel that's typically used in the industry is for the
9 design basis source term.
10 And what we did for the normal effluent
11 source term, which is normally used as empirical data
12 for effluent releases, is we use the highest fuel
13 failure rate in the current industry for the last ten
14 years of data. That represents the entire industry.
15 And while we think that we should get
16 fewer failed rods than the industry, we did not credit
17 that, we just consider that a basis for conservatism
18 for using the highest rate industry seen in the last
19 ten years.
20 MEMBER BLEY: What is that highest rate --
21 MEMBER REMPE: So, to make sure I
22 understand --
23 MR. SHAVER: That's the 66.
24 MEMBER BALLINGER: Yes, but I think the
25 design basis for plants is one percent is failed fuel.

1 MEMBER REMPE: -- five percent, .06
2 percent for design basis and then you separate it,
3 normal and design basis based on commercial operating
4 experience.
5 Regular LWR would come in with .25
6 percent. Both, or what does the regular LWR come in
7 at?
8 MEMBER CORRADINI: So, can I repeat what
9 I think is the question?
10 MR. OSBORN: Okay. Yes, but get close to
11 the microphone to do that.
12 MEMBER CORRADINI: Oh. Can I repeat what
13 I think is the question, which is that your point, the
14 difference between the realistic and design basis is
15 a factor of ten.
16 MR. OSBORN: Yes, sir.
17 MR. SHAVER: Correct.
18 MEMBER CORRADINI: And the realistic is
19 the highest of the observed current industry practice.
20 MR. OSBORN: That's correct.
21 MR. SHAVER: Correct.
22 MEMBER CORRADINI: In the last decade.
23 MR. OSBORN: That's correct.
24 MR. SHAVER: Correct.
25 MEMBER CORRADINI: Okay, Joy.

MEMBER REMPE: Yes, but does industry come in with the separation already, is what I'm trying to get to?

It sounds like you've done something that actually the current fleet has come in and separated too, and are you the first to do this?

MS. FOSAAEN: Just to clarify the question to make sure we heard it correctly, does the existing fleet submit both the normal and a design basis source term or is this something NuScale is doing differently?

MEMBER REMPE: That's what I'm trying to ask you, yes.

MS. FOSAAEN: Okay.

MR. OSBORN: Okay.

MR. SHAVER: So the design basis source term we're using 660, or .066 percent instead of a quarter percent.

For the normal effluent, that is usually not calculated using a fuel failure fraction. The ANSI standard is used for the primary concentration isotopes and the GALE code is used for the effluent release, which is empirical data, effluent release data from the industry.

So, since the GALE code and NUREG-17

1 wasn't applicable to the NuScale design, we calculated
2 the effluent release and the normal source term from
3 fuel failure fraction, which is atypical, that has not
4 been done for the normal effluent source term.
5 So we basically did what everybody else
6 did for design basis, in terms of methodology, and
7 applied that to the normal effluent. With a different
8 in fuel failure rate.
9 MEMBER BALLINGER: But I'm not sure what
10 Vogtle --
11 MEMBER REMPE: Thank you.
12 MEMBER BALLINGER: I'm not sure what
13 Vogtle and Summer would have as a design, we'd have to
14 check, but older plants, the cleanup system was
15 designed for one percent failed fuel. It never, ever,
16 ever, ever got there, but that was the cleanup system
17 design was for one percent failed fuel.
18 MR. OSBORN: So, the standard review plan
19 and our design specific review standard provided the
20 guidance of a quarter percent for design --
21 MEMBER BALLINGER: Okay.
22 MR. OSBORN: -- basis source terms for
23 purposes of shielding design.
24 MR. SHAVER: You're correct that some of
25 the other plants were designed to one percent.

1 MR. OSBORN: Yes.

2 MEMBER BALLINGER: Yes.

3 MR. SHAVER: And later it was a quarter

4 percent.

5 MEMBER BALLINGER: Yes.

6 DR. SCHULTZ: Let's back up one more time.

7 The effluent, the effluent results that you achieve

8 for NuScale with these assumptions, how do they

9 compare to the effluent results for standard LWR? Or

10 for AP1000.

11 MR. OSBORN: Yes, so there's a technical

12 report that's listed here having to do with the GALE

13 replacement methodology. And we go through an

14 evaluation of what the effluents is for a NuScale

15 plant. And we do compare that to what is typically

16 you get from GALE at a normal, a typically larger PWR.

17 Mark is going to look up some of the --

18 DR. SCHULTZ: An order of magnitude

19 difference between what you're calculating and what

20 has been seen in the past with GALE?

21 MR. OSBORN: So I'll let Mark explain to

22 that.

23 DR. SCHULTZ: Or standard plant, some

24 standard plant evaluation of PWR?

25 MR. OSBORN: So, I think it's going to be

1 a mixed bag, right? So we produce more tritium --
2 DR. SCHULTZ: Sure. Okay.
3 MR. OSBORN: -- than maybe a typical
4 plant. So we're going to see higher tritium
5 effluents. We're going to see lower in other
6 isotopes.
7 I don't know if you had an easy table in
8 that report. Because I know like for water activation
9 that we calculated, like carbon-14, we were a little
10 bit lower than a traditional plant, related to
11 effluent.
12 MR. SHAVER: Yes, the comparisons we have
13 were against the water activation products.
14 MS. FOSAAEN: So, I think this is
15 something that we --
16 DR. SCHULTZ: Mark, you want to --
17 MS. FOSAAEN: -- could be found in our
18 tech report if you were interested.
19 DR. SCHULTZ: Yes.
20 MS. FOSAAEN: I don't know that we can
21 look it up just now.
22 DR. SCHULTZ: If I can get that reference
23 designation. I'm sure we have it already.
24 MR. OSBORN: Yes.
25 DR. SCHULTZ: Access to it.

1 MR. OSBORN: It's listed here on the
2 slide, Technical Report TR1.
3 DR. SCHULTZ: Oh, perfect. I do have that
4 one. Thank you.
5 MEMBER REMPE: Mike, that report is on our
6 website.
7 CO-CHAIR CHU: Joy, can I ask a quick
8 question? Yes.
9 I guess what we're asking is, with this
10 failure rate, assumed basically, everything is within
11 the commonsense boundary. Your observation.
12 And since it's one of a kind --
13 MR. OSBORN: Right.
14 CO-CHAIR CHU: -- the source term and then
15 the resulting doses and activation product amount and
16 stuff.
17 It's all, you did not fail your
18 commonsense test, right?
19 MR. OSBORN: Yes.
20 CO-CHAIR CHU: I'm asking you.
21 MR. OSBORN: Oh.
22 CO-CHAIR CHU: Yes.
23 MR. OSBORN: No, I think it does pass what
24 I would call the snicker test. Yes, it does make
25 sense.

1 MEMBER KIRCHNER: So, then for the design
2 of the CVCS system for the shielding of those, cation
3 and other exchangers for cleaning up the primary
4 system, you're using this source term? Design basis
5 source term.
6 MR. OSBORN: That's correct. Yes, that's
7 correct.
8 MEMBER KIRCHNER: Thank you.
9 DR. SCHULTZ: Jim, you mentioned that for
10 fuel failure that the natural circulation would be in
11 NuScale's design favor.
12 MR. OSBORN: Yes.
13 DR. SCHULTZ: And we talked about some
14 other possibilities that we don't know about at this
15 point. I guess my comment on the debris failures is
16 that, generally debris failures happen pretty rapidly
17 if debris is in the system.
18 MR. OSBORN: Yes.
19 DR. SCHULTZ: So they're really, that
20 performance has really been improved by debris
21 elimination and by debris filters on the fuel.
22 MR. OSBORN: Right.
23 DR. SCHULTZ: And I think that's, anyway,
24 we won't get into the fuel design discussion.
25 My question, my second question, that's a

1 comment, my second question is, with regard to crud,
2 with the low flow, is that going to, perhaps,
3 exasperate the amount of crud that builds up in the
4 system?
5 MR. OSBORN: That's --
6 DR. SCHULTZ: Versus a standard PWR.
7 MEMBER SKILLMAN: That's the same question
8 I am asking.
9 MEMBER BALLINGER: And that's why I asked
10 if --
11 (Simultaneous speaking)
12 MEMBER SKILLMAN: Not with respect to fuel
13 failure but just with respect to crud.
14 MR. OSBORN: Right. So --
15 MEMBER BALLINGER: That's why I asked if
16 there was a distinction in the industry between 690
17 and 600 plants --
18 MEMBER SKILLMAN: No.
19 MEMBER BALLINGER: -- because I think the
20 690 plants would be less.
21 MEMBER SKILLMAN: Yes.
22 MEMBER BALLINGER: Maybe quite a bit less.
23 MR. OSBORN: Yes. So what we have seen I
24 think is so we moved to this higher nickel alloy,
25 right, so the --

1 MEMBER BALLINGER: Higher chromium.

2 MR. OSBORN: Yes. And so you still get --

3 So we reduced the cobalt, right, but you increase the

4 nickel and so you get more cobalt-58, and that's what

5 we have seen.

6 Of course, cobalt-58 is a lower energy

7 with a shorter half-life, so the overall result from

8 what we believe in terms of using water chemistry

9 control and material control we'll see a lower crud

10 component than is typical.

11 And we have seen that. Like I said, the

12 ANSI standard that we follow was issued in 1999.

13 There is a new revision to that standard in 2016 and

14 it shows a general reduction in the crud isotopes and

15 the doses resulted from crud isotopes from the

16 industry.

17 Now, with NuScale's half-height natural

18 circulation flow across the core are there some other,

19 you know, mechanisms that would tend to increase crud

20 build up on the fuel, you know, I think through

21 primary water chemistry control that those

22 consequences can be mitigated.

23 I am not a chemistry expert, so I would

24 not opine too dogmatically on that. But, no, I --

25 DR. SCHULTZ: I am looking in the audience

to see if you have your chemistry expert here. I think he was on the phone.

MR. SHAVER: Yes, I believe John Muniga is on the phone.

(Simultaneous speaking)

MR. SHAVER: Yes, I did want to reiterate the point that we are using modern materials, all the lessons learned from the current industry, so we are using rubber cobalt material, raising the current pH regime that has been shown to reduce crud.

So we are doing all these things and the industry has seen a reduction in crud, but we're not -- So we are doing these things in our design but we are not crediting them in our analysis by still using older crud data from the '90s before all these things were in place for conservatism.

DR. SCHULTZ: The other issue I wanted to ask about for you here, I think the staff is going to discuss it in their presentation in Chapter 12, but there was one RAI issued and then there was a back-and-forth between the staff and NuScale on crud burst.

MR. SHAVER: Mm-hmm.

DR. SCHULTZ: And where does that discussion stand now? I think that is still an open item.

1 MR. OSBORN: Yes.

2 MR. SHAVER: It is.

3 MR. OSBORN: Yes, there is an RAI that is
4 still open. We are still, you know, working to
5 respond to. Our position has been that we followed
6 the guidance that was provided.

7 Like I said, there is no first principles
8 method for calculating crud, so all we are left with
9 is the reliance upon the ANSI standard, which we did
10 utilize just like every other applicant has done in
11 the past, and so, you know, there was no other
12 guidance provided for calculating crud.

13 MR. SHAVER: I also wanted to say that the
14 outstanding issue with crud is only with regards to a
15 post-shutdown induced crud burst, not the steady state
16 primary concentrations.

17 DR. SCHULTZ: That's what I wanted to
18 understand. I think the response by NuScale was that
19 that could be an issue that would be addressed by
20 clean-up, but, again, here we are talking about, at
21 least in Chapter 12, effects on radiation, radiation
22 effects for employees and as well as --

23 So my question is do you have a good
24 handle on what you would expect for shutdown crud
25 bursts and time duration associated with that clean-

1 up?

2 MR. OSBORN: Yes, I think we have looked

3 at that and like I said the predominant isotope of

4 concern related to crud or in a crud burst would be

5 cobalt-58.

6 And so the duration of a crud burst would

7 be relatively short-lived and would be cleaned up by

8 the CVCS and then those resins would be transferred to

9 the solid waste system.

10 Cobalt half-life is on the order of 70-

11 something, 71 days, so, you know, it's a transient

12 condition that by the time it goes to solid waste and

13 decays for two years it's gone, so we didn't see it

14 necessary to be addressed in the shielding design.

15 MR. SHAVER: And this is also not unique

16 to NuScale. Every plant has done it and previous

17 applicants have addressed it.

18 MR. OSBORN: The crud burst.

19 MR. SHAVER: So crud burst is nothing

20 unique or different to NuScale, either design or

21 operations.

22 DR. SCHULTZ: Thank you.

23 MEMBER SKILLMAN: Isn't cobalt 5.2 years?

24 MALE PARTICIPANT: That's cobalt-60.

25 MR. OSBORN: Say that again.

MEMBER SKILLMAN: Cobalt is 5.2 years.

MR. OSBORN: Oh, I was talking about cobalt-58.

MEMBER SKILLMAN: Okay. What -- In your source term you identified a rate, 0.6 to 0.7 rods per reactor, what is the rate, is that per fuel cycle, for 24-month fuel cycle?

MR. OSBORN: So a failed failure rate is assumed for a particular cycle.

MEMBER SKILLMAN: For 24 months?

MR. OSBORN: Yes, sir.

MEMBER SKILLMAN: Okay. Thank you.

MR. OSBORN: So the 66 rods per million we have about just shot of 10,000 rods in a core, so it comes out to 0.66 rods per reactor on average.

MEMBER SKILLMAN: Okay. Thank you.

MR. OSBORN: Okay. Next slide. The secondary coolant source term, the NuScale secondary coolant source term was conservatively determined by using the NUREG-17 primary-to-secondary tube leaks.

So this is despite the fact, of course, the secondary system flows on the inside of the tube, the primary coolant is on the outside at a higher pressure, so there is a compressive load on these tubes.

1 But yet we still use the NUREG-17 leak
2 rates which are exactly opposite, right, the tube is
3 under a tensile load which would tend to -- A
4 compressive load would tend to compress any cracks,
5 but we still use the NUREG primary-to-secondary leak
6 rates so we believe that is conservative for a NuScale
7 helical-coil steam generator.
8 We also looked at direct activation of the
9 secondary coolant and despite NuScale being an
10 integral PWR design the secondary coolant activation
11 by neutrons from the core was determined to be
12 negligible and so it was not a big contributor to the
13 secondary coolant activity concentration.
14 MEMBER CORRADINI: You said because it's
15 integral you expect it more because of the close
16 proximity and it just turned out not to be?
17 MR. OSBORN: Yes. So our DSRS suggested
18 that may be an issue and so we looked at that and we
19 did determine that the -- It's in the same module,
20 right, but it's far enough away from the reactor core
21 that the neutron fluxes, it doesn't become a major
22 contributor to the primary secondary, or the secondary
23 coolant activity.
24 And I will also say related to that, you
25 know, the module is submerged in water and we also

1 looked at the activation of the surrounding pool water
2 from the neutron, from the core, and that, too, was
3 not a major contributor compared to the other sources
4 of radionuclides that get dispersed into the reactor
5 pool.
6 DR. SCHULTZ: That was a detail
7 calculation that you performed.
8 MR. OSBORN: Yes. That --
9 DR. SCHULTZ: That's a comment. It was a
10 detail calculation you performed to demonstrate that.
11 MR. OSBORN: Yes, sir. All right. And so
12 also in calculating the secondary coolant
13 concentration the -- because some of the components of
14 the secondary side aren't fully designed we don't know
15 all the volumes of those secondary system components,
16 so we actually in calculating the concentration you
17 divide by the total volume.
18 Well our total volume neglected these
19 pieces of equipment that are not yet designed, which
20 gives you a higher concentration artificially, but we
21 didn't have design numbers to use so we used what we
22 had and so it ends up with a higher concentration.
23 So that's another conservatism we believe
24 that's on the secondary coolant concentration. And
25 then there is no COLA items associated with Section

11.1.

The next section is somewhat related but it talks about the GALE replacement methodology. So NuScale did not use NUREG-17 or the GALE code for determining its gaseous and liquid effluents.

So GALE uses empirical data from, probably from the '80s, that, you know, correlates gaseous and liquid effluents to certain plant parameters, so instead of using GALE -- and NuScale is outside of that range of many of those plant parameters, so it was not suitable to be applied to the NuScale design.

So NuScale developed a replacement methodology that actually calculates and tracks radioisotopes as they matriculate through plant systems and end up as effluents.

So this was all developed in this technical report. The staff did an audit and had no open items associated with this methodology. All right.

Section 11.2 is liquid waste. So the liquid waste system is designed with the latest technologies using input from vendors and utilities and also utilizing the guidance from the EPRI Utility Requirements Document and this system is designed to collect, store, and process liquid waste.

The two main processing trains are the low conductivity and the high conductivity waste streams. The low conductivity and high conductivity and the drum dryer processing equipment are skid-based and this is to facilitate potential future replacement as processing technology advances over the life of the facility.

There is other minor players in terms of supporting systems in the chemical waste, detergent waste, and clean and place systems. The liquid waste system is non-safety-related but is designed in accordance with the augmented qualities provided in Reg Guide 1.143 and its hazard classifications.

So here I have listed the degasifier is an RW-IIa. The low conductivity collection tank is an RW-IIb. These are the hazard classifications provided in the Reg Guide that gives the aug quality of the components that have a higher radioisotope content.

And the liquid waste system is located primarily within the radioactive waste building, the exception being the degasifier which is in the reactor building.

So some of the design features, like I said the liquid waste system uses modern technologies like reverse osmosis and tubular ultrafiltration to

1 improve performance of water processing and clean up
2 and also reduces the generation of waste, and the
3 waste streams are segregated to reduce, further reduce
4 waste generation.
5 So there are four collection tanks, two
6 for the high conductivity waste stream and two for the
7 low conductivity waste stream, and, similarly, there
8 are four sample tanks, again, two for each train, and
9 each of these tanks has a 16,000 gallon capacity.
10 These tanks are located in separate
11 stainless steel lined cubicles in the lower level of
12 the reactor building. A system also includes a
13 demineralized water clean and place system that
14 provides for easier system flushing and cleaning.
15 The liquid effluence from the sample tanks
16 can be recycled back to the reactor pool, it can be
17 recycled back to primary coolant, it can be returned
18 to the liquid waste collection tank for reprocessing
19 if necessary, or it can be discharged from the plant.
20 And the system is designed so that a full
21 collection tank can be processed within a shift and
22 the system is also designed, of course, to meet the
23 regulatory criteria of offsite dose limits and offsite
24 concentrations and radiation monitoring is providing
25 on the effluent to ensure that discharges are within

1 regulatory limits.

2 Next slide is a summary diagram of the

3 liquid waste system. You'll see the top portion

4 pertains to the low conductivity waste stream and then

5 the middle portion pertains to the high conductivity

6 waste stream and the bottom portion is detergent

7 waste, of course they all end up coinciding as there

8 is a single liquid effluent discharge point.

9 MEMBER SKILLMAN: Jim, what confidence do

10 you have that there are no other sneak streams into

11 these tanks?

12 MR. OSBORN: Sneak streams?

13 MEMBER SKILLMAN: Yes. Your handy-dandy

14 contractor connects sanitary into one of these drain

15 lines.

16 MR. OSBORN: I'm sorry, I didn't hear

17 that.

18 MEMBER SKILLMAN: One of your handy-dandy

19 contractors connects a sanitary drain into one of

20 these drain lines.

21 MR. OSBORN: So -- Okay, so you're saying

22 they plum a bathroom to the liquid waste system, which

23 is -- All right, so now you're going to get organics,

24 and so --

25 MEMBER SKILLMAN: No, no, no, that's not

1 my concern.

2 MR. OSBORN: Okay.

3 MEMBER SKILLMAN: You've got a population

4 in this country and wherever these might be built that

5 in many cases use isotopic medications or they are

6 administered isotopes.

7 MR. OSBORN: Okay.

8 MEMBER SKILLMAN: And once you cross that

9 boundary you now have a mixed waste that is beyond

10 mixed, capital M.

11 MR. OSBORN: Mm-hmm.

12 MEMBER SKILLMAN: And you now have solid

13 waste disposal issues that compound what are already

14 major issues in terms of waste forms.

15 My point is there needs to be a very clear

16 understanding that you can't cross sanitary into any

17 of these drain systems.

18 MR. OSBORN: Yes. So that would be a

19 construction error, right, if you cross-piped some

20 sanitary waste system to the liquid rad waste system,

21 and we have, you now, QA programs and design control

22 to prevent those kinds of things.

23 MEMBER SKILLMAN: Okay.

24 MR. OSBORN: All right. Then the next

25 slide is just a list of the COL items associated with

1 Section 11.2.

2 I should point out the section, or the

3 Item 11.2-3 says "not used," that formerly was a site-

4 specific COLA item to do a liquid waste tank failure

5 analysis in accordance with Branch Technical Position

6 11-6.

7 That is currently being restored, so that

8 change is being processed now so that will be no

9 longer "not used" but "used for a branch technical

10 position evaluation."

11 All right. Section 11.3 is gaseous waste.

12 So the NuScale gaseous waste system utilizes industry-

13 proven technology to collect and delay the gaseous

14 waste releases to allow for isotope decay.

15 It's a relatively simple once-through flow

16 through charcoal beds. It's a non-safety-related

17 system but is provided with augmented quality in

18 accordance with Reg Guide 1.143 again and the system

19 is located entirely within the radioactive waste

20 building.

21 Some of the design features associated

22 with gaseous waste system, like I said it's a once-

23 through delay system. It uses ambient temperature

24 charcoal beds to delay the gaseous waste stream to

25 allow for radioactive decay.

1 The charcoal bed performance can be
2 degraded by moisture so the delay beds are protected
3 by both a moisture separator and a charcoal guard bed.
4 Since the presence of hydrogen is expected both oxygen
5 and hydrogen are monitored with dual monitors to
6 prevent the creation of flammable mixtures.
7 If a fire is detected the system can be
8 deluged with nitrogen for fire suppression. If a high
9 radiation signal or condition is detected at the
10 outlet of the system the outlet valve of the gaseous
11 waste system is closed stopping flow to the building
12 ventilation system.
13 The system is a low pressure low flow
14 system. It consists mostly of nitrogen, which is
15 added to the system's flow to keep a positive pressure
16 to prevent end leakage and it also keeps hydrogen less
17 than 1 percent.
18 The system is -- Yes, sir?
19 DR. SCHULTZ: Jim, the monitors that you
20 described for oxygen and hydrogen they are alarmed in
21 some fashion? I am just questioning how it prevents
22 flammable mixtures.
23 MR. OSBORN: So, yes, there is --
24 DR. SCHULTZ: Or is it a feedback system
25 in some way?

1 MR. OSBORN: No. So it's an alarm system,
2 right, so it has a set point, and, you know, I'm going
3 to get the numbers wrong, but this is documented in
4 the application.
5 There is a high and high-high alarm
6 associated with both oxygen and hydrogen. I don't
7 remember the percentages. They are on the order of 1
8 or 2 percent.
9 And so the operators will get a high alarm
10 first and then they get a high-high alarm. So there
11 is -- And there is redundancy in the monitors and
12 we're monitoring both oxygen and hydrogen.
13 Hydrogen we expect to see. We try to keep
14 it at, like I said, less than 1 percent. Oxygen we
15 try to preclude entry into the system. So that's why
16 we keep it at a positive pressure with respect to the
17 ambient and the systems that typically feed into the
18 gaseous waste system are not going to contain much
19 oxygen.
20 DR. SCHULTZ: Good. Thank you.
21 MR. OSBORN: Yes, sir. And the system, of
22 course, is designed, such as the effluents are in
23 compliance with the release concentrations and the
24 offsite dose limits and the gaseous waste stream is
25 monitored at the exit of the system by radiation

monitors that would be routed to a ventilation system and eventually up the vent stack.

All right, the next slide is a summary diagram of the gaseous waste system which depicts the simpleness of the system. Like I said the moisture separator and the guard bed protect the delay beds from the intrusion of moisture and then the exit goes to the ventilation and up the vent stack.

And these are the COLA items associated with this section and have to do with site specific evaluations.

All right, Section 11.4, solid waste. So the system is designed to provide for the collection, processing, packaging, and storage of different types of solid wastes.

There are two main categories of solid waste. There is wet solids and dry solids. The dry solids typically collected at the point of generation then sorted, processed, and packaged for either storage or offsite shipment.

Wet solid wastes are processed eventually into high integrity containers, or HICs, and prepared for either storage or offsite shipment. We'll talk about that system a little bit more on the next slide.

But the solid waste system is, again, a

1 non-safety-related system but is provided with
2 augmented quality in accordance with the Reg Guide
3 1.143.
4 The spent resin storage tank is an RW-IIa,
5 which is the highest classification in the Reg Guide
6 and the phase separator tank is an RW-IIb, and all the
7 other components are RW-IIc, and the waste system is
8 all located within the rad waste building.
9 So some of the design features pertaining
10 to the wet solid wastes, there are two spent resin
11 storage tanks and two phase separator tanks.
12 The spent resin storage tanks are intended
13 to collect Class B/C wastes from the chemical and
14 volume control system demineralizers and from the pool
15 clean up system demineralizers and he phase separator
16 tank is intended to collect Class A waste from the
17 liquid waste system demineralizers.
18 These tanks are on the lower level of the
19 rad waste building in separate stainless steel-lined
20 cubicles and are provided to hold waste for a period
21 of time to allow for decay before they are transferred
22 to a disposable container.
23 So the NuScale facility has enough storage
24 capacity for about four years we estimate and related
25 to solid waste generation rates.

All right, the next is a diagram again of the summary of the solid waste system. It's a little busy, but you'll see that the top portion is related to wet solid waste, the middle portion is related to dry solid waste, and the bottom portion are other minor players such as oily waste or any mixed waste that may get generated.

All right. The next slide is the COLA items associated with solid waste. All right. And Section 11.5 has to do with process and effluent radiation monitoring.

NuScale process radiation monitors are designed to monitor and record various process streams and effluents and to provide indication of potential malfunctions by generating alarms for operator reaction, or there are some automatic controls.

For example, the liquid and gaseous waste outlets are designed with radiation monitors that will initiate a signal to close the outlet valve upon a high rad signal.

All the process and effluent monitors are non-safety-related. Some of the design features include automatic isolation of gaseous and liquid effluents.

The main steam line monitors are a little

bit different than the traditional plant. Instead of nitrogen-16 they are designed to detect argon-41, as we have discussed before.

And as I mentioned before liquid waste has a single point of discharge. The liquid waste system feeds into the utility water system which has the outfall to exit the plant.

And most of the gaseous effluent from the NuScale facility would be discharged through the vent stack as opposed to other pathways such as the turbine building.

These are a list of the gaseous monitors and the associated systems. There is a subset of those are -- You can -- Some of them are tagged with effluents, or effluent monitors, such as the condenser air removal and the pool surge control storage tank vent.

And then there is a couple of them that are also PAM variables, post-accident monitoring variables associated with, again, the condenser air removal system and the reactor building ventilation vent stack. These are in accordance with Reg Guide 1.97.

These monitors are non-safety but are provided with augmented quality in accordance with

ANSI N13.1.

The next slide is a list of the liquid processed monitors associated with various liquid processing systems. Two of these are also associated with effluent.

Again, the liquid waste system feeds into the utility water system, which is the single point of discharge for the NuScale facility. And, again, all these monitors are non-safety but have augmented quality and associated with ANSI Standard N42.18.

And the COLA items associated with Section 11.5 had to do with developing programs, offsite dose calculation manual, and radiation environmental monitoring program, and then conformance with various Reg Guides and standards for the detailed design of these monitors.

All right. And the last section is 11.6. Like I mentioned before this is a new section that was added to the NuScale design specific review standard.

The information that was requested in this section was already provided and contained in other sections of the DCA, so this section merely points to the appropriate section for that requested information, and there were no COLA items associated with this section.

1 So that concludes the Chapter 11
2 presentation. Any questions?
3 CO-CHAIR SUNSERI: Around the table any
4 questions from -- All right. Joy, any additional
5 questions on Chapter 11?
6 MEMBER REMPE: No. Thank you.
7 CO-CHAIR SUNSERI: Okay. So, you know,
8 Margaret and I were just looking ahead at the Chapter
9 12 slides and my estimation is it's less than a 50/50
10 chance we'd finish that in 30 minutes, so I suggest we
11 take a break here for lunch and pick it up at 12:30.
12 Is everybody okay with that?
13 PARTICIPANT: Yes.
14 (Off-microphone comments.)
15 CO-CHAIR SUNSERI: Say that again?
16 MEMBER BROWN: Staff comes after 11.
17 MALE PARTICIPANT: Staff Chapter 11.
18 CO-CHAIR SUNSERI: Yes, we're doing the 11
19 and 12 together each and --
20 MALE PARTICIPANT: Oh, okay, I didn't
21 realize that, sorry.
22 MALE PARTICIPANT: Ah, okay.
23 CO-CHAIR SUNSERI: Yes, okay. All right,
24 so we will break until 12:30. So at this point we are
25 recessed.

(Whereupon, the above-entitled matter went off the record at 11:27 a.m. and resumed at 11:27 a.m.)

CO-CHAIR SUNSERI: Okay, we are back in session. Welcome back from lunch, everyone. Before we begin with the Chapter 12 presentation by NuScale, Zach Houghton wants to make some remarks from this morning. So Zack?

MR. HOUGHTON: Thank you. I just wanted to offer one correction to a statement during my presentation.

In the discussion on the auxiliary boiler system, we talked about how there's a high pressure and a low pressure separated system. And I believe it was in response to Member Brown that I stated the high pressure system could be used so that steam from one system could be used to support startup of another system. That's incorrect.

The crosstie is only on the low pressure steam system. So low pressure steam may be used from one unit to crosstie steam over to the condenser deaeration or gland seals.

So the chemistry concerns and the potential contamination, cross contamination concerns that Mr. Skillman addressed is still something we

consider in the design for that aspect. But we do not use steam from unit to support the startup and heatup of another unit. So that was the clarification I wanted to make.

CO-CHAIR SUNSERI: Thank you. Any follow-up to that?

(No response.)

CO-CHAIR SUNSERI: Okay, great. Thanks, Zach. All right, we are ready now to resume with the Chapter 12 presentation by NuScale.

MR. SHAVER: I'd like to begin by following up on a question that we received for Chapter 11 on comparisons of our effluent releases to existing reactors.

I did a little research over lunch, and for our normal primary source term I compared the dose equivalent iodine, or concentration. And with a fuel failure fraction of 0.066 percent, we have a higher dose equivalent iodine than is listed in the ANSI 16.199 standard.

And I'm not claiming there's a direct tie to our fuel failure fraction and the standard, but I'm just addressing downstream comparisons.

Also for offsite doses, it gets a little convoluted, because there's, for liquid effluents

there's dilution flows, and we have less dilution flow from our utility water system than large plants.

Also we have different chi over Qs for the gaseous effluence. And offsite doses are a composite of all isotopes, not just fission products.

Also there are multiple different offsite doses that are compared. There's the whole body dose and the then different mechanism, max internal organ. And those vary quite a bit from previous applicants, so there's no one really good metric.

But I did take the whole body gaseous effluent dose and compare it to previous applicants. And we were roughly 30 percent of the offsite dose of the previous applicant. And it bounced around varying for the different doses and the different applicants around that factor. So we're not orders of magnitude smaller. We're on the order of magnitude proportional to our lower power.

CO-CHAIR SUNSERI: Thank you.

MR. SHAVER: So hopefully that addresses that question, and I'll move into Chapter 12 now. We have the same personnel here that we had for 11, only I'll be doing the speaking for 12 instead of Jim.

CO-CHAIR SUNSERI: I think I can hear you adequately, but if you just move that mic a little

closer, it'd be much better.

MEMBER CORRADINI: You're a soft speaker, so get close.

MR. SHAVER: All right. The next slide is acronyms, and you can refer to those throughout the presentation. We'll be going through Chapter 12 in order of the sections. 12.1 is ALARA, 12.2 radiation sources, 12.3 is radiation protection design features, 12.4 is the dose assessment, and 12.5 is the Operational Radiation Protection Program.

So for 12.1, NuScale focused on ALARA and contamination minimization by design from the early stages of the design. We focused a lot on material selection based on the surface environment, and minimizing cobalt, and also on the latest chemistry controls of higher pH zinc injection and induced crud burst and associated cleanup.

So we're following EPRI guidelines and plan on using the latest industry guidelines as well as following all the guidance of Reg Guide 8.8 and 4.21.

So we used experienced operators, and got feedback from them as part of the design, as well as health physicists and radiological engineers, and had interdisciplinary teams do training to the design

1 engineers as well as reviews of the engineering
2 products.
3 MEMBER SKILLMAN: Would you go back one?
4 I want to commend you for recognizing the importance
5 of HVAC early on for the radiological design. I think
6 what we see in the industry very commonly is the AEs.
7 Not to fault them, but HVAC was more of a
8 comfort and habitability issue as opposed to a
9 radiological controls issue. And that has led to all
10 kinds of challenges in terms of doors, negatives
11 pressures, that type of thing. So thinking HVAC on
12 the front end and radioisotope transport is to your
13 credit.
14 MR. SHAVER: Thank you. And we definitely
15 did. There was an iteration in the design process
16 with multiple systems, including the HVAC design of
17 giving them what they needed to clean up and then
18 getting backup limitations.
19 Section 12.2 is radiation sources. I'm
20 not going to go into details. We went over that in
21 Chapter 11 on the design basis source term. So we
22 used the design basis source term that was discussed
23 in 11.1, and that's kind of why we wanted to take so
24 much time and go through it.
25 One difference that I did want to point

1 out though is with the large reactor pool. It's a
2 significant body of mostly tritiated water. The pool
3 cleanup system can take care of the other
4 radionuclides that are introduced during refueling but
5 obviously not tritium.
6 So we did recognize that as a unique and
7 important aspect of the design. And as was mentioned
8 earlier, we have three modes of operation. And the
9 bounding condition for the pool would be recycling
10 water back to make up for the pool after it goes
11 through the radwaste system. So our bounding analysis
12 essentially assumed all the tritium that was generated
13 in the plant ended up in the pool.
14 When this happens, the pool level reaches
15 an equilibrium concentration. The additions are from
16 the primary coolant. And there's evaporation and
17 decay that causes it to reach equilibrium.
18 So all of our offsite doses for gaseous
19 effluence, as well as HVAC design and occupational
20 exposures to airborne in the reactor building, were
21 done using this bounding tritium source term in the
22 pool.
23 MEMBER KIRCHNER: From a health
24 standpoint, what's the implication? Start with the
25 operators, because you're constantly refueling. What

kind of exposures are you expecting them to get from the tritium?

MR. SHAVER: So we designed the HVAC system in the pool area to ensure that we stayed under ten percent of the DAC.

CO-CHAIR CHU: Can you speak up a little bit, sir.

MR. SHAVER: Yes. We designed the HVAC system such that, with that amount of pool tritium concentration, we would stay under ten percent of the DAC for the operators in the pool room.

MEMBER KIRCHNER: Ten percent of what?

MR. SHAVER: Derived air concentration. That's the concentration that would give a worker their annual limit on intake if they were full-time workers in that area.

MEMBER SKILLMAN: How is that tied to the pool temperature?

MR. SHAVER: We assumed the design basis pool temperature of 100 degrees Fahrenheit.

MEMBER SKILLMAN: And in reality, where do you expect it to really be?

MR. SHAVER: Much lower than that. That puts quite a bit of load on the HVAC system. That was the design basis temperature for the HVAC system. And

1 what was actually bounding for them was rejecting all
2 that heat and moisture, not the radionuclides. So it
3 would be costly in terms of the house load for the
4 HVAC system to operate with a full temperature at 100
5 degrees.
6 MEMBER SKILLMAN: But at 100 Fahrenheit,
7 your HVAC will keep the DAC at ten percent.
8 MR. SHAVER: Under ten percent, yes.
9 MEMBER SKILLMAN: Okay. Got it.
10 MEMBER BALLINGER: This figure, I must be
11 confused. Tritium's got a half-life of about 12.28
12 years.
13 MEMBER SKILLMAN: Thirteen --
14 MEMBER BALLINGER: Okay, round numbers,
15 13, however you want to do it. That means the
16 equilibrium, unless there's a removal --
17 MR. SHAVER: There's a removal of
18 evaporation of the pool.
19 MEMBER BALLINGER: Okay, so that's why it
20 takes less than a half-life to build up equilibrium,
21 okay.
22 MR. SHAVER: Correct. So besides the
23 tritium and other radionuclides above the reactor
24 pool, we looked at rooms with occupancy that had the
25 potential for primary leaks and designed the HVAC with

one or two error changes per hour depending on -- or potential for contamination and leaks.

Another major source of radiation is obviously also the core. And we used the energy spectrum source term from SCALE and performed shielding calculations using MCNP6.

Our accident source terms are developed per a topical report that's currently under evaluation. And then those are used in Chapter 15, design basis accidents. So I wasn't planning on going into more detail of those here.

We have one COL item in 12.2 to identify additional contained sources that are greater than 100 microcuries.

MEMBER CORRADINI: But in looking at the SC, that's the -- all the open items tend to -- not all, many of the open items tend to connect to the fact that they're still waiting to see --

MR. SHAVER: Correct.

MEMBER CORRADINI: -- the revised copy.

MR. SHAVER: Yes.

CO-CHAIR CHU: And what is the reason behind the revision of the accident plan?

MR. SHAVER: We have updated our methodology fairly substantially, some due to NRC

reviewer comments and some due to internal reasons, specifically for equipment qualification doses in Chapter 3.

I had an animation for this, and I apologize. This is a PDF. So I'm sure you're all familiar with this. This is a typical PWR design not representative of the NuScale design. But I wanted to just point out that, in a large PWR, there are many external sources that are distributed throughout the plant, like the steam generators, coolant pumps, and large pipes.

And the NuScale design has changed this by being an integral PWR so that the steam generators and the pressurizer are internal to the vessel. And the pumps, and most of the piping is eliminated from the design. So the sources are either co-located in a vessel or not there.

So the next slide is a screen shot of our MCNP model. We did a whole module MCNP model. And it shows these different sources. So we do shielding calculations from the neutrons and gammas from the core, activation of the vessels, steam generator, pressurizer, the primary coolant. We take all these into account to model the doses of off the module.

(Off-microphone comments.)

1 MEMBER CORRADINI: Is somebody trying to
2 say something on the line?
3 (No response.)
4 MEMBER CORRADINI: Could you please mute
5 your line if you're not trying to make a statement?
6 Thank you.
7 MR. SHAVER: And as was mentioned in
8 Chapter 11, because things are closer to the core than
9 normal, we looked at activation of things that
10 normally aren't calculated. So we looked at
11 activation of components as well as the secondary and
12 the pool water.
13 MEMBER KIRCHNER: What is the water
14 chemistry to the pool? Is it essentially the same as
15 the primary system?
16 MR. SHAVER: Yes, it is. We're following
17 the American industry guidelines for the pool.
18 (Simultaneous speaking.)
19 MEMBER KIRCHNER: -- but what about the
20 water quality?
21 MS. FOSAAEN: We've committed to the same
22 EPRI standard for the water quality of the pool as the
23 primary.
24 MEMBER KIRCHNER: As the primary?
25 MR. SHAVER: Yes.

1 MR. MUNIGA: Correct. And that's for
2 shutdown condition.
3 MEMBER KIRCHNER: Yeah.
4 MR. SHAVER: Section 12.3 is on radiation
5 protection design features. I mentioned our
6 collaborative efforts between engineering operations,
7 and health physicists, and radiological engineers to
8 optimize the location and the shielding configurations
9 of different components. A lot of effort was put into
10 the CVCS cubicles and shielding layouts.
11 We spent a lot of effort on organizing the
12 plant layout. We had an interdisciplinary group that
13 met monthly to discuss different portions of the plant
14 and manage them spatially to make sure that Ops got
15 enough room. But it was accommodated by the dose
16 rates.
17 Equipment arrangement was done similarly.
18 We spent a lot of effort for design features for
19 shielding and system designs, building ventilation,
20 radiation monitors are strategically placed to provide
21 indications of radiological conditions. And as I
22 mentioned before, we followed Reg Guide 4.21 to
23 minimize contamination. There's a COL item to develop
24 the administrative controls.
25 MEMBER SKILLMAN: Has all the high density

polyethylene been removed?

MR. SHAVER: Our design currently does have some high density polyethylene. And I call that out, I believe, on the next slide.

MEMBER SKILLMAN: Okay. I'm not looking at it. Thank you.

CO-CHAIR SUNSERI: Do you intend to perform any ground water monitoring to detect for contamination that way? I mean, a lot of plants have ground monitoring wells to --

MR. ROYAL: This is Mark Royal, instrumentation controls. Any type of ground water monitoring will be done like a regular plant would be. There's really no difference in the requirements or regulations for ground water monitoring for the NuScale design as it would be for any other regular PWR.

CO-CHAIR SUNSERI: I couldn't hear the last part. And somebody's got something coming in over the phone line. So if you could please mute your phones if you're not trying to talk.

MR. ROYAL: So this is Mark Royal. I was just saying that the ground water monitoring regimen that NuScale is going to follow would be the same as a regular PWR. There would be no difference necessary

for ground water quality monitoring. You still monitor for the same constituents, the same periodicity.

CO-CHAIR SUNSERI: So I'm not following you. So yes or no? You're monitoring ground --

MR. ROYAL: Oh, yes, you do monitor it.

CO-CHAIR SUNSERI: Okay.

MR. ROYAL: Sorry, yes.

MR. SHAVER: Besides the general criteria and design features, I wanted to call out a few specific design features for radiation protection. And the first one is the refueling, decoupling the module, and all the in-service inspections and operations on the module that's close to the core.

And the beltline where it sees the highest flux and gets activated is all down at the bottom of the pool remotely underwater. So there's no dose to people for those activities.

MEMBER SKILLMAN: What operating experience have you utilized in terms of understanding the worker dose that comes with accessing underwater devices with long-handled tools?

MR. SHAVER: The pool is 69 feet deep. So we don't plan on using long-handled tools to do operations at the bottom of the pool. So that will be

done with remote handling.

MEMBER SKILLMAN: Is it reasonable to expect that individuals like you and like me won't, and other people in the room, won't ever be up close to these fixtures and tools once they're pulled out of the water?

MR. SHAVER: The reason they would be pulled out of the water would be for decommissioning.

MEMBER SKILLMAN: So they're going to be in the water for 60 years?

MR. SHAVER: I believe so. The lower portion of the vessel and the refueling tools are designed for the life of the plant.

CO-CHAIR SUNSERI: Yeah, but you'll still pull them out to do maintenance on them.

MEMBER SKILLMAN: Anybody in here 60 years old?

PARTICIPANT: Not anymore.

MEMBER SKILLMAN: It's a long time. It was a while ago, yeah.

MR. SHAVER: There will be --

MEMBER SKILLMAN: It's a long time, yeah.

MR. SHAVER: There will be sources that are taken out of the pool, for example, bolts from decoupling the module, and so those will sit in the

pool for a period of time to cool off and then will be handled via the crane to take out of the pool and put in some kind of shielding to be taken out and serviced or replaced.

MEMBER SKILLMAN: I'm sure that'll all be taken care of under your radiological controls program, and your worker dose examinations, and your HP program. I understand that.

The point I'm making is, if you're working alongside of stuff that's been in the water, you can pick up a pretty strong beta dose. If there's anything in that water, you might be surprised what the workers get. You might think the water's going to take care of everything. You might be surprised that it doesn't. We learned that at TMI, big time.

MR. SHAVER: All right.

MEMBER KIRCHNER: What's the exposure that you expect from disconnecting the spool pieces in that part of the operation, decoupling the module and getting it ready to lift, and then refuel, and then bringing it back, and connecting it up? Do you have any incidents of exposures to --

MR. SHAVER: Yes, we do. And that's in Section 12.4 on the dose assessments which is the slide after the bioshield.

1 MEMBER KIRCHNER: All right.

2 MR. SHAVER: So if I may defer that to the

3 next slide.

4 MEMBER KIRCHNER: Okay.

5 MR. SHAVER: Thank you. So another design

6 feature that I wanted to call out was the bioshield.

7 This goes over the top of each of the modules. And

8 the horizontal part of the bioshield is two feet of

9 reinforced concrete. And the vertical part is

10 steel-lined, borated, high density polyethylene

11 panels.

12 These are alternating panels to allow air

13 flow. There's a duct under each bioshield that sucks

14 air. So this maintains air going from the pool area

15 to underneath the bioshield so that it's flowing in

16 the direction of more potential contamination.

17 MEMBER CORRADINI: So this is over each of

18 the bays where the modules are?

19 MR. SHAVER: Correct.

20 MEMBER CORRADINI: And this is above

21 ground? So say it again, please. What's the height

22 of these guys?

23 MR. SHAVER: They top of the bioshield is

24 at the 125-foot level of the building. And the front

25 face goes all the way down to the water level.

1 MEMBER CORRADINI: I see. Which is at
2 what elevation, approximately?
3 MR. SHAVER: Just under 100.
4 MEMBER CORRADINI: Okay.
5 MEMBER SKILLMAN: What I read is each one
6 of these bioshields is 150,000 pounds. Each one's 75
7 tons. And the way they're manipulated is with your
8 reactor building crane to snatch this and put it on a
9 joined module when you prepare to remove the module
10 that this sits on top of. That's what I read in your
11 book.
12 MR. SHAVER: I don't remember the weight
13 off the head, but the operation, as you described, is
14 correct.
15 MEMBER SKILLMAN: I remember the weight,
16 It's 150,000 pounds, 75 tons. It's one of the pieces
17 of your crane categories of lift.
18 KIRCHNER: It's the same crane, isn't it?
19 MEMBER SKILLMAN: Same crane.
20 MR. SHAVER: Yes, it's the same reactor
21 building.
22 MEMBER KIRCHNER: You suggest that the
23 crane has a real, if you don't put a physical limit
24 in, which you could try and lift the other module.
25 That's the module -- let me say it differently. The

1 crane is capable of going to a much higher elevation
2 than a module lift at one foot.
3 MEMBER SKILLMAN: The crane has a very
4 critical role in the design of this facility.
5 MEMBER KIRCHNER: One more time, I know I
6 read this, but you actually pick up that block and put
7 it on top of another block on an operating module?
8 MR. SHAVER: That is correct. Since this
9 covers the model it also precludes access to the top
10 of the module which is good during operation. This
11 whole bioshield will be lifted off and moved to sit on
12 top of another bioshield.
13 MEMBER KIRCHNER: So if you have a seismic
14 event while you're moving one of the modules, this
15 could topple in the pool.
16 MR. SHAVER: I believe it'll be anchored
17 down. I'm not familiar with how, but I know that was
18 analyzed by our seismic folks. And it's anchored so
19 that it would not fall into the pool.
20 MS. FOSAAEN: And I believe that's
21 discussed in Chapter 3.
22 MEMBER KIRCHNER: Chapter 3, yeah. All
23 right, let me make a note of that. Thank you.
24 MR. SHAVER: Section 12.4 is the dose
25 assessments. So many previous applicants used

1 empirical data, existing plant doses to estimate the
2 doses in theirs. Our design and our operations are
3 substantially different. So we did our dose
4 assessments in a little different way.
5 We used operational experience from
6 operators and the designers to identify all the
7 operations that would occur in the plant. And we
8 coupled that with the staffing and operations plans to
9 determine the activities and the duration of those
10 activities. And we informed the dose rates that those
11 activities would see by our shielding analyses.
12 Doing that, we have a series of
13 calculations on doses for all the different
14 activities. And they're summarized in Table 12.4-1 of
15 our FSAR which I've reproduced here. And the pie
16 chart shows the different distribution of doses for
17 different categories of activities.
18 MEMBER SKILLMAN: Are the man-rem
19 estimates the total number of workers divided by the
20 total exposure of that number of workers? Is that you
21 developed those numbers?
22 MR. SHAVER: That's not how we developed
23 these. We developed these to total worker hours for
24 the activities.
25 MEMBER SKILLMAN: Yeah, okay. Total

worker hours divided by total worker dose. Same thing, okay. Thank you.

MR. SHAVER: Yeah, so this would be the dose for all personnel doing the work in the plant.

MEMBER SKILLMAN: Thank you.

MEMBER BALLINGER: Special maintenance begs a more detailed answer, begs for a more detailed answer. That's 30 percent of your dose. Special maintenance, what is special maintenance?

MR. SHAVER: Sure. Broadly, it's maintenance on the module itself.

MR. BRISTOL: This is Jon Bristol.

PARTICIPANT: Get a little closer.

MR. BRISTOL: This is Jon Bristol. So special maintenance, where we broke it up was any maintenance activity on top of the module. This generally occurs in the dry dock during a refueling outage. So any of the work activities associated with components on the module itself is in this section.

MEMBER BALLINGER: So that's not part of refueling then.

MR. BRISTOL: Sorry, say that again.

MEMBER BALLINGER: It's not -- okay.

MR. BRISTOL: So, no, the refueling covers the activity of taking the module out of the operating

bay, putting it into the refueling pool, breaking it apart, transferring fuel, putting it back together, and then putting it back in the module, then hooking it up.

MEMBER BALLINGER: Thank you.

MEMBER KIRCHNER: Can I ask about layout for this CVCS system. You know, each module has its own system. It's one of your more complicated systems, I would say, you know, versus your primary.

You've got charging pumps and quite a few valves to isolate it, and makeup water, and so on. Have you give consideration to how that's laid out. I'm thinking in particular of the polishing part of the system and how that's shielded versus the rest of the system.

MR. SHAVER: Yeah, we gave a lot of thought to the layout of the CVCS rooms. We put the demineralizers in cubicles to shield them and extended the valves through the shield walls through a valve gallery, which then has another shield on the other side of the valve gallery to protect people from outside of the CVCS rooms. So that was our high level --

(Simultaneous speaking)

MEMBER KIRCHNER: You have a lot of

1 charging pumps with 12 modules. So they were outside
2 of that secondary shield or they're in with the --
3 MR. BRISTOL: I'm not sure I'm following
4 you on it. What do you mean by the secondary shield?
5 MEMBER KIRCHNER: But you describe putting
6 the ion exchangers in their own box. And then you
7 have screening, so you probably have some other
8 secondary wall.
9 And then you would have your valve
10 gallery, I would guess. And pumps, right.
11 MR. OSBORN: So, I'm speaking out from
12 memory here. But I believe, so the demineralizers are
13 on what we call a black cell. Right. So they're in
14 their own cell.
15 Outside of that, as Mark mentioned,
16 there's the valve gallery. And I think in the valve
17 gallery is where you'll find your pumps.
18 So, it's inside -- and then there's a wall
19 outside of that room before you get to the corridor.
20 So, the pumps would be inside that gallery.
21 MEMBER KIRCHNER: I supposed there are
22 places where you can pick up a lot of dose actually.
23 If you have --
24 MR. OSBORN: Potentially, yes.
25 MEMBER KIRCHNER: Frequent maintenance and

1 such.

2 MR. OSBORN: Yes.

3 MEMBER KIRCHNER: On things like the

4 charging pumps. Okay.

5 MR. OSBORN: Um-hum.

6 MEMBER BALLINGER: You mentioned

7 something, black cell. I think I know what that is.

8 What happens if you have to get in there?

9 I'm assuming the black cell that I know

10 about is once you close it up, you're done for. You

11 can't get in there.

12 MR. BRISTOL: All right, so this is a --

13 actually it's a design feature for those components.

14 But they're designed with a knockout panel.

15 So, it's enclosed. But the structural

16 wall is designed so that you can cut through without

17 cutting through the reinforcing steel and that kind of

18 thing, without interrupting the integrity of the wall.

19 MEMBER BALLINGER: So it's a gray cell.

20 MR. BRISTOL: I appreciate your

21 distinction.

22 MR. SHAVER: And each module, CVCS system

23 is in its own cell to shield -- if you have to go in,

24 it shields it from the adjacent.

25 MEMBER SUNSERI: Yeah. I had a follow up

1 question on the bioshield. Can personnel access the
2 interior of that during operation?
3 MR. SHAVER: No.
4 MEMBER SUNSERI: There's no access ports?
5 MR. SHAVER: There's no access.
6 MEMBER SUNSERI: You can't get your hand
7 behind the poly?
8 MR. SHAVER: No.
9 MEMBER SUNSERI: And that's going to be a
10 -- well, what's the exposure in there? It's high
11 right?
12 It would be a locked high radiation area
13 if it was --
14 MR. SHAVER: Yes. The doses are very
15 high.
16 MEMBER SUNSERI: It's neutron, too, right?
17 Because you've got the poly, right?
18 MR. SHAVER: Both neutron and gamma. That
19 is correct, yes.
20 MEMBER SUNSERI: Okay. I think that's
21 going to be an important control to make sure you
22 can't have any access too there.
23 MR. SHAVER: Yeah. There is no physical
24 access. The horizontal surface is two feet of solid
25 reinforced concrete, so.

1 MEMBER SUNSERI: Well, and again, I
2 encourage you to look at the industry experience about
3 what access actually means. I mean, you know,
4 literally sticking your hand through a vent could be
5 access, so.
6 MR. BRISTOL: So that portion of the pool
7 is not designed to be a routinely accessed area.
8 MEMBER SUNSERI: Yeah. I know. And it
9 doesn't have to be. Right.
10 MR. BRISTOL: So, you have to use a tool
11 and work from S-2 to put yourself in a position to do
12 that.
13 MEMBER SUNSERI: Okay.
14 MEMBER CORRADINI: You've got to talk
15 louder. Okay? You guys have got to get closer.
16 Don't be afraid. We can't hear you.
17 MR. BRISTOL: Do you want me to repeat
18 that answer?
19 MEMBER CORRADINI: No. We've got it. But
20 I think you've just to get closer though. That's all.
21 MR. SHAVER: All right. A couple of other
22 notes that I wanted to bring up is that there's a zero
23 item for doses to construction workers.
24 And that this doesn't represent the total
25 plant dose. So that's 12 operating modules with two

1 year refueling cycle systems. So this would be six
2 refuelings a year.
3 So the distribution of doses from our
4 plant is substantially different proportionally to a
5 large PWR because of our design differences. We have
6 more proportionally expected dose from work around the
7 module.
8 Approximately 80 percent of our plant dose
9 -- dose that the workers get in the plant each year
10 would be from work around or on the modules.
11 Disconnecting and reconnecting the modules
12 and operating bay is a new evolution. But it is very
13 similar to the conventional PWRs for the RPB head, you
14 disconnect it and do a heavy lift.
15 Maintenance doses are in different
16 proportions. The steam generator and the pressurizer,
17 as I mentioned, are inside the reactor pressure vessel
18 and the containment vessel. So there are many inches
19 of steel between workers and those sources which
20 shields them.
21 And service inspection is different.
22 Also, work done on the module, the pressure vessel and
23 containment vessel shields them.
24 We have all automated and digital systems,
25 which what this means is that we have more

1 proportional doses from calibration and maintenance of
2 these. But then less proportional dose to actual
3 physical manipulations or operations.
4 So, on the balance, these things reduce
5 the total plant dose. But they also give it a
6 different proportional distribution. So I just wanted
7 to point out those differences.
8 MEMBER KIRCHNER: Can you go back to your
9 second bullet? I'm trying to think through how your
10 modules are connected and disconnected. And then the
11 number of spool pieces.
12 So they're underwater, reasonably far
13 underwater.
14 MR. SHAVER: The spool pieces are all
15 above water.
16 MEMBER KIRCHNER: They're all above water?
17 MR. SHAVER: Yes.
18 MEMBER KIRCHNER: Okay.
19 MR. SHAVER: The top of the module.
20 MEMBER KIRCHNER: All the disconnects are
21 above water then?
22 MR. SHAVER: Yes.
23 MEMBER KIRCHNER: Okay. And is there any
24 streaming of those pipes?
25 MR. SHAVER: There is streaming. There's

actually more substantial streaming between the void, between the pressure vessel and the containment vessel.

But a lot of that is shielded --

MEMBER KIRCHNER: Right.

MR. SHAVER: For shutdown when we flood containment.

MEMBER KIRCHNER: A flood containment, that helps. And what about just a vertical background that's coming from the core of sitting there? Up --

MR. SHAVER: That's almost all attenuated. That's not a substantial.

MEMBER KIRCHNER: That's all attenuated?

MR. SHAVER: There's actually more of those on top of the module from the modules across the pool then from the module that the operators are on top of.

MEMBER CORRADINI: So, I thought I understood, and now I've got to ask the question. So I've got a module, I've got six of these guys. And I've got walls between them.

The bioshield is here? Or the bioshield is here and here?

MR. SHAVER: There are pool bay walls that are solid concrete walls between each --

1 MEMBER CORRADINI: On the inside?
2 MR. SHAVER: On the inside between each
3 module.
4 MEMBER CORRADINI: Right. Right.
5 MR. SHAVER: The bioshield is only the
6 front face that looks out --
7 MEMBER CORRADINI: Front face going into
8 the pool or --
9 MR. SHAVER: Into the pool.
10 MEMBER CORRADINI: Looking out to the end
11 of the building?
12 MR. SHAVER: Looking into the pool.
13 MEMBER CORRADINI: Looking into the pool.
14 And then the concrete top is sitting there.
15 MR. SHAVER: Correct.
16 MEMBER CORRADINI: Okay. And then on the
17 bay walls and then on the edge of the pool to the next
18 -- to outside of the pool is concrete?
19 MR. SHAVER: Correct.
20 MEMBER CORRADINI: Okay. Fine. Thanks
21 very much.
22 MR. SHAVER: So in this picture these are
23 the solid walls that are between each module.
24 MEMBER KIRCHNER: So you said that there
25 is more shine from the operating module then from a

1 shutdown module once you reflood the containment?
2 MR. SHAVER: Correct. Which is why we
3 added in the high density polyethylene into the design
4 on the front face. To shield shine across the pool.
5 MEMBER KIRCHNER: Yeah. Okay. Thank you.
6 DR. SCHULTZ: Mark, on your -- on this
7 table here, the -- something like steam generator
8 inspection and repair, would that be under special
9 maintenance?
10 Is that -- I mean, it would be infrequent.
11 Where does that tie into your estimation?
12 MR. BRISTOL: Yeah. So, special
13 maintenance of the steam generator would be -- or
14 maintenance of the steam generator which is inside the
15 upper portion of the module, would be part of special
16 maintenance.
17 DR. SCHULTZ: And you anticipate that
18 would happen how often?
19 MR. BRISTOL: So as far as maintenance,
20 the general maintenance on the steam generator itself
21 is just going to be plugging tubes if they fail.
22 The in-service inspection of the steam
23 generator is a different part. And that's under in-
24 service inspections.
25 DR. SCHULTZ: But you don't anticipate

plugging -- looking and plugging tubes often? That would be an infrequent evolution.

MR. BRISTOL: Yes. However, it is part of our evaluation.

DR. SCHULTZ: It is in here?

MR. BRISTOL: Yes.

DR. SCHULTZ: Thank you.

MR. SHAVER: One other difference that I wanted to bring up was that with an outage ever two months planned, we expect there to not be significant outside resources.

We're not going to have transient outage crews coming in. They're going to be in-house plant staff that do refueling.

And we think in the long run this will actually give us some dose gains as they become proficient in finding efficient ways to do things. And our staff plans all account for everybody that needs to do work in the plant being a plant staff.

So the next slide provides in comparison to the current industry using NUREG-0713, the latest volume. And the top row is the yearly average doses from PWRs and BWRs.

That's kind of not the best comparison though since they have more power and more staffing.

1 So, we also look at plant doses per worker and per
2 megawatt.
3 I'm not going to read the table. But the
4 conclusion is that we're comparable in terms of man-
5 rem per megawatt year, and man-rem per year to the
6 current industry, even though we have six refuelings
7 a year, which demonstrates the ALARA of our design.
8 DR. SCHULTZ: Mark, I think your previous
9 statement discussing how dose might be improved over
10 the years with refueling experience is more -- is more
11 that demonstrates ALARA then this comparison
12 demonstrates ALARA.
13 In other words, ALARA is something you do
14 over time in order to prove the circumstances. Not
15 compare to others.
16 But, I appreciate your earlier comment.
17 MR. SHAVER: All right. Section 12.5 is
18 the Operation Radiation Protection Program. Which is
19 essentially a COL item to develop it.
20 And the next two slides summarize the COL
21 items in Chapter 12. I'm not going to read them.
22 They're there for your reference. And I try to hit on
23 the ones I thought were important as we went through
24 the presentation.
25 And that concludes my presentation on

1 Chapter 12. Are there any further questions?
2 MEMBER SUNSERI: Members around the table,
3 any questions? Joy, any questions?
4 CO-CHAIR SKILLMAN: I do. Yeah, I do,
5 Matt.
6 MEMBER SUNSERI: Oh, okay.
7 CO-CHAIR SKILLMAN: Thank you. Just let
8 me get my navigation accurate here before I mislead
9 the congregation.
10 There's a fairly punchy write up in the
11 safety evaluation relative to CRDMs, where -- and the
12 use of cards. Does that ring a bell with you?
13 Cards with respect to CRDM wear?
14 MR. SHAVER: Cars?
15 CO-CHAIR SKILLMAN: C-A-R-D-S. Let me ask
16 the staff. It's in the safety evaluation. And I
17 didn't really understand what was being communicated.
18 But it's not on your watch. It's on the
19 staff's watch.
20 MR. SHAVER: Yeah.
21 CO-CHAIR SKILLMAN: So, I'll ask them.
22 MR. SHAVER: I'm not sure.
23 MEMBER SUNSERI: We have a person coming
24 to the mic.
25 CO-CHAIR SKILLMAN: If you would please.

1 I'm just trying to understand what the term means
2 relative to the potential for rod binding and cobalt
3 wear.
4 That is the context of the comment in the
5 safety evaluation.
6 MR. LAVERA: Hi. I'm Ron Lavera. I'm the
7 lead reviewer for Chapter 12.
8 And the reference to the cards is to the
9 guide cards for the thimbles going up and down in the
10 guide tube prior to going in the card -- into the
11 core.
12 So the intent of the staff was to make
13 sure that they didn't have any wear between the guide
14 -- those cards which are guides and the individual
15 rodlets that are on the reactivity control assembly.
16 This was of particular concern to the
17 staff because of the longer length of the control rod
18 drive shaft as compared to a conventional large light
19 water reactor, and the potential for vibrations.
20 So --
21 CO-CHAIR SKILLMAN: No. I understand.
22 Okay. This is -- these are the -- this is the
23 geometry of the control rod guide tube ends where the
24 control elements retreat through the control rod guide
25 tubes.

1 I understand. Thank you. Not on your
2 watch. It's taken care of.
3 MEMBER SUNSERI: Joy, do you have any
4 questions for the NuScale folks?
5 CO-CHAIR REMPE: No. I'm good. Thank
6 you.
7 MEMBER SUNSERI: Okay. Well, thank you
8 for your presentation. Very thorough. Thank you.
9 Now we'll exchange positions with the
10 staff. And the staff can come up and bring their 12
11 -- 11 and 12 reports.
12 (Pause.)
13 MEMBER SUNSERI: Okay. Are we ready to
14 start?
15 MR. TESFAYE: Yes.
16 MEMBER SUNSERI: Yeah. I think Andy
17 Campbell with NRO is going to -- or NRR, whoever --
18 MR. CAMPBELL: NRO.
19 MEMBER SUNSERI: NRO. Okay. Well, for
20 today. Right?
21 MR. CAMPBELL: Well, for the next six
22 months.
23 MEMBER SUNSERI: Okay. Thank you.
24 MR. CAMPBELL: I'm Andy Campbell. I'm the
25 Deputy Director in the Division of Licensing, Siting,

1 and Environmental Analysis. Actually one of two
2 deputies in that division.
3 MEMBER SUNSERI: Can you bend that mic a
4 little closer? I mean, it's just --
5 MR. CAMPBELL: Can you hear me now?
6 MEMBER SUNSERI: There you go.
7 MR. CAMPBELL: There we go. So, I just
8 wanted to introduce the staff presentations with Zach,
9 Getachew, who's the Project Manager, Ed Stutzcage, and
10 Ron Lavera, Zach Gran.
11 They've been working very diligently for
12 a couple of years now. Several years actually on
13 Chapters 11 and 12. And I just think that they are
14 more than prepared for this presentation this
15 afternoon. So, take it away GT.
16 MEMBER SUNSERI: Right. Thank you Andy.
17 MR. TESFAYE: Right. Thank you Andy.
18 Good afternoon. Again, my name is Getachew Tesfaye.
19 I am the Chapter Project Manager for Chapter 11.
20 And we're going to start with Chapter 11.
21 Zach Gran on my left is the lead reviewer. He'll be
22 presenting that.
23 The staff's evaluation report was
24 submitted for your review about two months ago. And
25 this report contents to open items that will be

1 addressed in phase four of the review.

2 Zach will discuss in detail the five

3 technical areas the staff reviewed in Chapter 11 and

4 his findings and the remaining issues that will be

5 addressed in phase four.

6 Zach?

7 MR. GRAN: Hello everyone. Again, my name

8 is Zach Gran and I'm a Health Physicist in NRO. I am

9 the lead reviewer for Chapter 11 for radwaste systems.

10 I will be presenting the staff's technical

11 review of Chapter 11. The staff evaluated the source

12 terms, the liquid waste management system, gaseous

13 waste management system, solid waste management, and

14 the process and effluent radiological monitoring and

15 sampling systems.

16 In our technical review at the end of

17 phase two, we have two remaining open items. These

18 open items and a list of our RAIs by section are

19 presented on this slide. Next slide, please.

20 SER Section 11.1 contains the staff's

21 assessment of the source terms developed by NuScale.

22 Traditionally, the NRC's GALE code has been used to

23 determine the realistic coolant source terms in a

24 design application.

25 The NuScale design did not use the GALE

1 code to determine their realistic coolant source
2 terms. This was expected given that the GALE code was
3 designed for use in large light water reactors.
4 Instead, NuScale calculated their coolant
5 concentrations using the methods described in their
6 application and their technical reports on the GALE
7 replacement methodology.
8 To support the work and review of 11.1 and
9 the GALE technical report, the staff conducted a
10 couple of audits to review the calculations that
11 NuScale had generated and provided in the electronic
12 reading room.
13 And in addition, the staff verified data
14 from EPRI, which was the basis for determining the
15 fail fuel fraction rate that NuScale selected at the
16 .0066 percent for realistic fail fuel fraction.
17 And the staff -- in the staff's review we
18 determined that it was the maximum fail fuel value in
19 the 2007 to 2016 time frame.
20 And so as a result of the staff's review
21 and the audits, which are also documented in the audit
22 reports that the staff generated, the staff found that
23 NuScale's approach for calculating the realistic
24 coolant source terms were acceptable. Next slide.
25 CO-CHAIR SKILLMAN: Is that conclusion in

any way dependent upon the type of fuel? Or the fuel vendor?

Or are you just using straight industry data and presuming that forever and ever, the next 60 years, that is a good number?

MR. GRAN: We're using it based off of the failed fuel fraction. I know NuScale they don't -- we didn't really necessarily go over a specific fuel type.

We were more evaluating the industry and their fuel failure rates. And noticed that, you know, when you look at the entirety of the data to justify the reduction in fail fuel fraction, you notice there is a general trend.

CO-CHAIR SKILLMAN: Yeah.

MR. GRAN: Which is justified by how NuScale is with the fretting and what not.

And so, when you take a snapshot of it and you kind of say well, the industry understands how to make -- or they've done things to make it so that the fail fuel fraction is lower. And so they're going to take credit for that knowledge in the industry.

So, I feel it's appropriate for us to assume more of just the failed fuel fraction for this -- for this scenario.

1 CO-CHAIR SKILLMAN: Yeah. Thank you.
2 DR. SCHULTZ: Zach, what supported your
3 decision to say that the design basis source term
4 that's included in this evaluation was appropriate?
5 MR. GRAN: So, the design basis is more
6 addressed in Chapter 12. But, from my understand the
7 -- it's less that it's the design basis is ten times
8 the realistic.
9 It's more that the design basis is bounded
10 by tech spec limits for coolant concentrations.
11 DR. SCHULTZ: Thank you.
12 MR. GRAN: Next slide, please. So this is
13 the summary of our open items. So we have one open
14 item in RA -- one open RAI in Section 11.1.
15 This is due to a number of changes that
16 occurred with the modification of the realistic fail
17 fuel fraction. A large number of tables were changed
18 in both Chapter 11 and 12.
19 And it adjusted the source temperature
20 almost nearly all the tables that touched -- that were
21 affected by the change in the fail fuel fraction.
22 So, while we're still attempting to
23 resolve other RAIs since the tentacles in a sense went
24 out and touched many different areas, we're waiting to
25 close this RAI until we've been able to fully evaluate

1 everything.

2 MEMBER CORRADINI: Okay. I didn't

3 understand what you said in the SE. So, this is more

4 related to other things that you're still evaluating?

5 MR. GRAN: Right. So, this -- the RAI is

6 what we're using to track the change from what they

7 had previously used for a fail fuel fraction to the

8 .0066 failed fuel fraction.

9 MEMBER CORRADINI: So it's not that the

10 new value is inappropriate. You feel that reason --

11 it's acceptable?

12 MR. GRAN: Correct. We believe that the

13 value is acceptable. But, the changes -- we have to

14 evaluate the changes post the fail fuel fraction

15 change to ensure that the -- like component source

16 terms for example, are correctly calculated, or --

17 MEMBER CORRADINI: Oh. Okay. Okay. So,

18 given that number that you have to do, and a series of

19 other things that you're still tracking.

20 MR. GRAN: Correct.

21 MEMBER CHU: So, let me make sure I

22 understand it. So basically with the change, you want

23 to make sure all the spillover --

24 MR. GRAN: Right.

25 MEMBER CHU: And other related things

1 across the board are all updated and fixed.

2 MR. GRAN: That's correct.

3 MEMBER CHU: That are consistent. Am I

4 correct?

5 MR. GRAN: That's correct. Yep.

6 MEMBER CHU: Okay. Thank you.

7 MR. GRAN: Go to the next slide, please.

8 SER Section 11.2 contains the staff technical

9 assessment of the liquid radioactive waste system.

10 The staff's review entailed a review of

11 the liquid radwaste system features for processing

12 waste. This included a review of the system seismic

13 classifications and system features for alarms and

14 termination of liquid F-1 releases.

15 The liquid radwaste system operates on a

16 batch release. So F-1 is sampled prior to releasing

17 it to the environment.

18 The staff used the realistic source term

19 information review at 11.1 and the NRC approved LADTAP

20 II computer code to evaluate the doses as a result of

21 normal operation. Next slide, please.

22 The staff confirmed that the information

23 provided in Section 11.2 for meeting the dose

24 objectives and F-1 concentration limits was calculated

25 appropriately.

1 In addition, this slide presents a summary
2 of the COL items expected to be addressed in a COL
3 review for Section 11.2. And to summarize the COL
4 item, there's a COL item to verify that mobile and
5 temporary radwaste processing equipment will meet the
6 design guidance described for 11.2.
7 Verification of offsite doses using site
8 specific parameters, so in this scenario they used
9 theoretically bounding parameters like the flow rates
10 that they had mentioned before to evaluate based off
11 of a site specific scenario.
12 And also, a cost benefit analysis will be
13 performed. This requires the knowledge of the
14 population distribution around the plant be done. So
15 this is very well suited for a COL application.
16 Next slide, please. So, I guess there's
17 a typo there we forgot to -- there was one open item.
18 So, as we note here on this slide.
19 In 11.2 it's in regards to the BTP 11-6,
20 which describes the guidance for determining the
21 impacts of a failure of a tank containing radioactive
22 material.
23 As NuScale indicated, we're in discussions
24 to get the COL item back in. Which would have a COL
25 applicant evaluate the outdoor tank and see the

radiological consequences to a member of the public.

And so, I guess we're expecting to see something from NuScale that we're -- so, we're just waiting on that still.

MEMBER CHU: What kind of path forward are you talking about?

MR. GRAN: So, the path forward here would just be the reintroduction of COL items. So, originally RAI 87.50 had the examples of the COL items, I believe.

I'm not 100 percent sure what NuScale will come forward with. But, from the discussions, It sounds like it will be very similar to that.

And so it will just be the commitment for the COL applicant to evaluate those dose scenarios. Next slide, please.

SER Section 11.3 contains the staff's assessment of the gaseous waste management system. The staff's review entailed in review of the gaseous radwaste system features for processing waste similar to the review performed in 11.2.

This entailed a review of the system seismic classifications and system features for alarms and terminations of gaseous F-1 releases.

In addition, the staff used the source

1 term information reviewed in Section 11.1 and the
2 NRC's approved GASPAR II computer code to evaluate the
3 dose as a result of normal operation. Next slide,
4 please.
5 And so the staff confirmed that the
6 information provided in 11.3 for meeting the dose
7 objections and F-1 concentration limits, was being
8 calculated appropriately.
9 The NuScale design describes the assumed
10 source terms used for a failure of the charcoal delay
11 beds that are also described in this section.
12 The staff's analysis confirms that the
13 reported dose results made by NuScale for a bypass of
14 the charcoal delay beds is below 10 millirem as they
15 suggested. I think I calculated something around 2
16 millirem in my analysis.
17 There are no mobile or temporary equipment
18 considered in the gaseous radwaste system design
19 currently.
20 This slide presents a summary of the COL
21 items expected for 11.3. Similarly, you -- the COL
22 applicant will address site specific primers like the
23 chi over Q values, which change from site to site.
24 This also -- this is also to ensure that
25 the doses are still within the relevant regulations.

1 And also are still consistent with the BTP 11.5, which
2 is the bypass of the charcoal beds since the chi over
3 Q values are also leveraged for that dose analysis.
4 And similar to 11.2 again, the cost
5 benefit analysis will be performed for the gaseous F-1
6 releases.
7 DR. SCHULTZ: I thought in the SER it was
8 stated that NuScale had done an evaluation of this
9 type. And their conclusion was that there would not
10 be additional equipment that would be cost justified.
11 Is that -- am I right there?
12 MR. GRAN: So --
13 (Simultaneous speaking.)
14 DR. SCHULTZ: The COL applicant would
15 still need to do this in order to meet the --
16 MR. GRAN: The part 50 --
17 DR. SCHULTZ: The regulations.
18 MR. GRAN: Yeah. Part 50, Appendix I.
19 DR. SCHULTZ: Yeah.
20 MR. GRAN: Section 2(d) is, you will have
21 to do this analysis to see if there are any additional
22 radwaste like clean up features that would reduce
23 doses below that one thousand dollars per person rem.
24 DR. SCHULTZ: Am I right in saying that
25 NuScale's done an evaluation where they believe that

it is a -- they've got everything in place?

MR. GRAN: I haven't reviewed an evaluation that would suggest that there's no need to do the --

DR. SCHULTZ: Okay.

MR. GRAN: Gaseous cost benefit analysis.

DR. SCHULTZ: All right. I'll look at that further. Thank you.

MR. GRAN: Next slide, please. SER Section 11.4 contains the staff's assessment of the solid waste management system.

The staff's review entailed a review of the solid radwaste system features for processing waste similar to the reviews in 11.2 and .3. This review entails a review of the seismic classification and system features for alarms.

The solid radwaste system has no assumed direct liquid or gaseous releases, which is expected. In addition, the NuScale design provides information on the anticipated annual generation of waste volumes.

NuScale demonstrated that based on the waste generate rates assumed in their -- in Section 11.4, they describe the ability to store waste for at 30 days.

The staff agrees with NuScale's storage

capacity assessment. Next slide, please.

This slide presents a summary of the COL items expected to be addressed in COL -- or Section 11.4. For instance, the mobile and temporary radwaste processing equipment will meet the appropriate design guidance.

And development of the process control program using NEI 07.10(a). And NEI 07.10(a) is the process control program set up, which the NRC has agreed to and so I developed an SER for.

So this approach is acceptable given the staff's endorsement of the NEI template. Next slide, please.

The following slides present a summary of the -- well, the SER Section 11.5 contains the staff's review of the process in effluent radiation monitoring, instrumentation, and sampling system.

The staff has verified that this section contains the features, locations, monitoring ranges, alarms, and functions for the effluent radiation monitoring contained in the NuScale design.

In addition, the staff has verified that all release points have monitoring equipment provided. Next slide, please.

This slide presents the summary of the COL

1 items for 11.5. So, a COL applicant will be required
2 to address any additional site specific monitoring
3 equipment that they may find.
4 And NuScale also adopts the NEI template
5 07.09(a) until a plant site -- plant and site specific
6 offsite dose calculation manual and radiological --
7 radiological environment and monitoring program is
8 developed to support plant operation.
9 This approach is acceptable given the
10 NRC's endorsement of the NEI templates. And next
11 slide, please.
12 The staff expects to resolve the open
13 items related to finalizing the review of 11.1 and
14 11.2 in phase four of the review. As discussed,
15 NuScale is anticipating providing us some information
16 on what they've planned on doing for the BTP 11.6.
17 And for 11.1, we're work -- it's on our
18 end to resolve some of the questions since we're
19 trying to finalize our understanding of the component
20 source terms and the subsequent dose analysis.
21 And that's -- that concludes my
22 presentation for 11. -- or Chapter 11.
23 MR. TESFAYE: Thank you Zach. Any
24 questions?
25 MEMBER CHU: Just that there's a minor

1 typo on slide number eight. It should be with open
2 items.
3 MR. GRAN: Is that for the 11.2 one?
4 MEMBER CHU: Eight. Number eight.
5 MR. GRAN: That's correct.
6 MEMBER CHU: It says with no open items.
7 MR GRAN: That's correct. Yeah. We tried
8 to -- yeah.
9 MEMBER CHU: My second question is, you
10 guys have no issues with the crud source terms?
11 MR. GRAN: So there's --
12 MEMBER CHU: Because really, it's a
13 conservative way of --
14 MR. GRAN: I'll defer to Ron on his
15 assessment for the crud. So the -- I think the crud
16 issue is an open item presently.
17 MR. LAVERA: And we discuss that in the
18 context of Chapter 12.
19 MEMBER SUNSERI: Any other questions for
20 staff on 11? Joy, any questions on 11?
21 CO-CHAIR REMPE: No. I'm fine. Thanks.
22 MEMBER SUNSERI: All right. We can go
23 onto 12 then.
24 MR. TESFAYE: All right. Thank you. So,
25 shall we go onto Chapter 12?

1 MEMBER SUNSERI: Yes. Yes, please.

2 MR. TESFAYE: Thank you again. Let's --

3 okay, thank you. To my right is lead reviewer Ron

4 Lavera. And his support is Ed Stutzcage, who you saw

5 yesterday. Ron will be presenting his slides.

6 MR. LAVERA: Oh, Zach Gran was also

7 involved in the Chapter 12 review.

8 MR. TESFAYE: In Chapter 12. Okay, this

9 is the team that did both Chapter 11 and Chapter 12.

10 We submitted the --

11 MEMBER BLEY: Can I offer something

12 completely nonsubstantive?

13 MR. TESFAYE: That's okay.

14 MEMBER BLEY: These slides look great on

15 the screen. At least I can't read them. The dark

16 blue is really dark here. And it's black on blue.

17 You'd do better to turn them on black and

18 white for us. Or anybody else for that --

19 MEMBER CORRADINI: Although these are very

20 pretty.

21 MEMBER BLEY: Very pretty.

22 (Laughter.)

23 MEMBER BLEY: It's much lighter up here,

24 you can read everything.

25 CO-CHAIR SKILLMAN: I thought the printer

1 was running out of ink.

2 MEMBER CORRADINI: Males our age are

3 subject to Daltonism. Blue -- this kind of color

4 scheme messes us up sometimes.

5 MR. TESFAYE: I apologize for that. It

6 won't happen again.

7 MEMBER BLEY: Share it with your friends.

8 (Off-microphone comments.)

9 MEMBER SUNSERI: Okay. All right -- all

10 right, we got it. We got it. We got it. Let's move

11 on. Let's go.

12 MR. TESFAYE: Okay. Thank you. Again,

13 this staff evaluation report was submitted to you

14 about two months ago.

15 If you go through that safety evaluation

16 report, there are 30 open items. One of them is on

17 Chapter 14.

18 Here we've listed 13 open items. These

19 are the ones that are discussed in this presentation.

20 Most of the open items in -- not most, but a good

21 number of the open items are related to the accident

22 system revision that we anticipate will be submitted

23 in April.

24 And you would probably present that -- the

25 result of our review later on this year in the

fall/winter time frame.

I think with that I will let Ron present this.

MR. LAVERA: Thank you Getachew. Hello again. My name is Ron Lavera. I'm the Lead Technical Reviewer for Chapter 12. And you know my fellow workers.

We evaluate the elements of the ALARA program -- or ALARA during the design of the NuScale processes. We looked at source terms, radiation protection design features, and operational dose assessment.

We focused on the unique elements of the NuScale application, such as the technical specifications limit on RCS-specific activity that was previously mentioned as it relates to the shielding and ventilation design.

We looked at unique sources of radiation exposure such as the direct neutron irradiation of the UH, ultimate heat sink pool and other structure systems and components.

Unique elements of the NuScale design such as the placement of the reactor vessel inside of the evacuated containment vessel. We had elements of the design that received less attention.

1 And that included such elements as those
2 provided to meet 10 CFR 20.1406 for minimizing
3 contamination of the facility and the environment, the
4 area and process radiation monitoring instruments not
5 associated with 10 CFR 50.68(b). That's for places
6 where fuel is handled and stores. And for post-
7 accident radiation monitoring.
8 We also didn't pay a whole lot of
9 attention to the direct dose to the control room
10 operators because of the physical location of the
11 separate control building facility. Next side,
12 please.
13 The NRC used SRP Section 12.1 as guidance
14 in performing the review of FSAR Section 12.1. The
15 review by the staff indicated that the applicant has
16 an ALARA program that is being used to inform the
17 design of the plant.
18 The NRC does not review operational
19 programs during the design phase. Next slide, please.
20 The staff reviewed how specific the act
21 specs of the design application related to radioactive
22 content of contained sources, specifically the reactor
23 coolant system, the presence of gamma sources, gamma
24 radiation sources from the RCS and fission neutrons in
25 your occupied areas are equipment -- important

1 equipment.

2 The arrangement of the reactor containment

3 and the associated shielding and the potential for

4 gamma and neutron streaming between the containment

5 vessel and the reactor pressure vessel.

6 Radionuclide concentrations in plant

7 systems, whether the radioactive content was from

8 single nuclear power modules like the CVCS system

9 components, or from multiple nuclear power models like

10 a phase separator tank.

11 The expected use of these conditions, the

12 number of concurrent units operating with tech spec

13 RCS-specific activity limits. Operational conditions

14 such as gas -- degassing the reactor coolant system

15 prior to shutdown.

16 And irradiation of plant components,

17 little focus was placed on highly irradiated

18 components expected to present little radiation

19 exposure to personnel such as the self-powered neutron

20 detectors, which are expected to remain under 40 feet

21 of water.

22 We didn't spend a whole lot of time on

23 that. We did focus -- try to focus more on some less

24 irradiated components that could represent a

25 significant exposure potential to operators trying to

1 work on the equipment, such as the CRDMs.

2 Bear with me here. Sorry, fighting my

3 presentation. Go back. Next slide, please.

4 For our airborne sources of radioactive

5 material, the staff focused on the ultimate heat sink

6 pool in the reactor building.

7 Based on the multi-module design, the

8 staff expects operating and maintenance personnel to

9 be inside the reactor building pool area on a near

10 continuous basis as described previously though, in

11 essence being essentially a non-ending refueling

12 outage.

13 The staff reviewed the potential for

14 personnel exposure from sources of airborne

15 radioactivity from activation products present in --

16 produced in the UHS pool.

17 And the staff was interested in the

18 factors that could drive airborne activity in the

19 occupied areas of the -- routinely occupied areas of

20 the reactor building, including stuff such as the

21 concentration of radionuclides in the pool from

22 maintenance activities, pool activity from direct

23 activation, factors affecting the removal of activity

24 from the pool, features affecting the evaporation from

25 the pool, and features of the design provided to

1 remove airborne radioactive material. Next slide.
2 The staff -- NRC staff reviewed
3 information provided by the applicant related to the
4 post-accident sources of radiation that could result
5 in exposure to plant personnel or to certain equipment
6 following the accident.
7 We looked at the sources -- the locations
8 of the sources, the magnitude of the sources, the
9 basis for the stated source quantities, the kinds and
10 quantities of radiation emitted from those sources,
11 and the behavior of the sources over time.
12 As noted, NuScale has notified the staff
13 that they intend to modify their source terms. So we
14 may be going back and looking at some of that stuff in
15 the future. Next slide.
16 The NRC staff used a graded methodology to
17 evaluate the kinds and quantities of radiation
18 expected to be present in the facilities.
19 Examples included, we used engineering
20 judgement as previously described to evaluate the
21 potential radiation exposure from the stuff like self-
22 powered neutron detectors that are going to stay
23 underwater. We didn't need to do a calculation for
24 that.
25 We did manual calculations such as

1 spreadsheets to determine the deposited activity in
2 plant components where that was appropriate. We used
3 MicroShield to calculate the photon energy spectrum
4 from resin beds.
5 We had the activity concentrations
6 provided in the application. And we checked to make
7 sure that the photon strengths matched up.
8 Where we couldn't use those type of
9 programs, the staff employed Scale 6.2.3 and the
10 associated origin program and MCNP 6.2 to model the
11 transport absorption of the neutron to gammas or the
12 photon streams from the sources.
13 Any questions?
14 MEMBER SUNSERI: Maybe just a comment.
15 So, on the middle bullet you say the staff disagrees
16 with the basis for the rationale. But you agreed with
17 the conclusion basically.
18 Does that bother you in any other part of
19 their review where they might be, you know, getting
20 the right answer with the wrong rationale?
21 MR. LAVERA: There is one other place that
22 we had that comment in the safety evaluation report.
23 And I believe I address it later in the slides.
24 So, we understand that they -- we may have
25 a difference of opinion of how to arrive at the -- and

1 answer that we can get our safety finding on.

2 We put that statement in there to make

3 sure that people reading the safety evaluation at a

4 later point understood how we arrived at our

5 conclusion as opposed to how NuScale stated they

6 believed was the amendment.

7 MEMBER SUNSERI: Right. Yeah. As an

8 independent regulator should. Right?

9 MR. LAVERA: Yeah. Next slide, please.

10 As discussed, the initial version of the application

11 utilized in RCS coolant specific activity lower than

12 the RCS-specific activity limit specified in technical

13 specifications.

14 That was allowed in by the DSRS by the

15 way. We had put that in -- put that flexibility into

16 the DSRS at the explicit request of industry.

17 Following discussions with the staff, the

18 applicant changed the specific activity of the coolant

19 to a value consistent with the technical

20 specification's limits as per NRC guidance. Which

21 resulted in changes to many of the tables as

22 previously discussed.

23 So, we also continued to look at how those

24 changes rippled through the information in the rest of

25 the design.

1 In the past, the guidance in -- did I say
2 next slide by the way? So we should be on slide ten.
3 Thank you.
4 In the past, the guidance in SRP 12.2
5 discussed the use of .25 percent fail fuel fraction as
6 the basis for the design of the shielding and
7 ventilation systems. With the new version, if you put
8 that value in technical specifications, the staff
9 would be willing to use that value.
10 One of the side effects of that change was
11 -- that was unanticipated by the staff at the time
12 that change was made is that other sources of
13 radiation exposure could become the dominant source of
14 activity.
15 For instance, the CVCS mix bed activity
16 from normal refueling shutdown crud burst cleanup is
17 well above the activity accumulated -- accumulation
18 possible from operating at the design basis tech spec
19 limit .066 for two years.
20 This is not the case for a standard large
21 water reactor where the .25 percent fail fuel fraction
22 is well above the activity that would accumulate in
23 components like the CVCS mixed bed to mineral assert.
24 As a point of interest the activity listed
25 in the FSAR for the CVCS mixed bed, does not include

1 a crud burst component. Next slide.

2 MEMBER CHU: So this is an open item.

3 MR. LAVERA: So this is an open item.

4 This is under continued evaluation. Next slide,

5 please.

6 During an audit the NRC staff noticed that

7 information about the size of the resin transfer lines

8 that was available to the staff during the audit, was

9 different from the information contained in Chapter 12

10 of the applications, because these lines run the

11 length of the reactor building and then go into the

12 radwaste building.

13 The NRC staff also noticed that the tables

14 in Chapter 12.3 of the application and the radiation

15 shielding ITAAC did not contain a description of the

16 shielding material and dimensions of the shielding for

17 those portions of the resin transfer lines located

18 within the reactor building.

19 So this is also an item that we're

20 pursuing. Next slide. We are on 12. Okay.

21 The NRC staff has engaged in an audit as

22 we were talking, to determine the kinds and quantities

23 of gamma and neutron radiation that maybe -- impact

24 personnel adjacent to the biological shield area.

25 And to assess the potential impact on

1 plant equipment that is important to safety. This
2 includes sources of activation gammas. So, we're
3 continuing to look at that.
4 Like the RAI previous -- next slide. I'm
5 sorry. We're on slide 13. Yes.
6 Like the RAI described on the previous
7 slide, the NRC staff is engaged in an audit to
8 determine the kinds and quantities of gamma and
9 neutron radiation that may impact personnel adjacent
10 to the biological shield area, and to assess the
11 potential impact of the plant equipment that is
12 important to safety.
13 Again, this is all trying to be addressed
14 during the audit. We are on the next, 14 yes. Thank
15 you.
16 The staff expects the quantities of
17 radioactive material within the gaseous waste
18 management components to differ from the description
19 in the application because the concentration of
20 fission product gases in the pressurizer and the
21 combination of routine operational degassing and pre-
22 outage degasification of the 12 modules served by the
23 common gaseous radwaste system.
24 Currently they don't account for a
25 degasification source term. Next slide.

1 During the review of RAI responses
2 associated with the change to material concentration
3 tables resulting to the change in the design basis
4 fail fuel fraction, the staff noticed an unexpected
5 change in the airborne tritium concentration.
6 We were expecting it to remain constant.
7 And it went down. The staff is using this current
8 audit to take a look at this particular aspect of the
9 change in the airborne activity level for tritium.
10 MEMBER RAY: Let me interrupt here with
11 the comment that you just made. Because it's similar
12 to the slide before.
13 About currently conducting an audit to
14 review something that's quite significant. Is there
15 a time during this process when we will have the
16 opportunity of any results of the audit? Or
17 determine?
18 Because I mean, you review -- you review
19 something here that is indeterminate at this point in
20 time.
21 MEMBER CORRADINI: We'll get the results
22 of the audit when it's done.
23 MR. TESFAYE: Yes. This is -- this is a
24 phase four activity. So, this audit is being done to
25 close out open items and resolve the issues, so.

1 MEMBER RAY: I understand. But the
2 results of the audit is more then, well we closed it
3 out, end of story. Typically, there are findings in
4 the audit one way or another.
5 And I'm just asking my colleagues actually
6 --
7 MEMBER CORRADINI: I'm sure we can get it
8 when it's completed.
9 MEMBER SUNSERI: We have a -- we have
10 somebody that's going to shed some light.
11 MR. LEE: Yeah. This is Sam Lee from NRO.
12 Just a finer point on what we do in the audit space.
13 When we speak of resolving RAIs, we don't resolve RAIs
14 in an audit space.
15 As you know, an audit has a public portion
16 of the process where we share -- where we made the
17 audit plan and the audit summary available to the
18 public. RAIs, as you know, the questions and the
19 answers are also made public.
20 The resolutions of the RAIs are done
21 through the RAI process. The audits are to inform the
22 staff of any detailed information that could support
23 the -- that could support the audit in -- excuse me,
24 the RAI information.
25 And so I just wanted to make sure that

1 we're not leaving you with the notion that RAIs are
2 being resolved within the audit space. Okay?
3 MEMBER RAY: Well, yeah. I'm not sure I
4 understood what you've just said. But, what I do
5 think I understand is the statement, the applicant did
6 not properly characterize the radiation fields in and
7 around the top of the containment vessel.
8 Well, I think we would like to know that
9 it's been determined that it has been properly
10 characterized. Or that corrective action's been
11 taken. Or something.
12 Because to simply tell us this and then
13 say, but we'll take care of it, doesn't necessarily
14 let us do what we're supposed to do.
15 MEMBER CORRADINI: I think though -- I
16 think we're -- well, once the audit is done, then we
17 can take a look at it.
18 We've asked for that in the past.
19 MEMBER RAY: Yeah. Well, that's fine.
20 I'm really asking those of you who can implement
21 something like that.
22 But I mean, that's a pretty substantive
23 point, an important point. There are some aspects of
24 this modular operation for which it's very important
25 that it be resolved.

1 And I'm just wanting to see that we do at
2 least find out in this case, or others that are
3 similar, that yes, it's been resolved. And --
4 MR. TESFAYE: Yes.
5 MEMBER RAY: Go ahead.
6 MR. TESFAYE: We can provide the
7 conclusion of the audit. As soon as we get
8 substantive information from the audit, we can provide
9 that.
10 The audit report is not due until three
11 months from the end of the audit. We can provide the
12 results of the audit before that.
13 MEMBER RAY: Okay. Well --
14 MEMBER CORRADINI: I think the next step
15 is once you provide the audit, once the item is
16 closed, when it's closed, we can come back and
17 understand how it's been resolved.
18 MEMBER RAY: Yeah. I mean, I understand
19 totally there are lots of RAIs out there, open items.
20 We get the things resolved and can't bring them back
21 here every time that happens.
22 It's just in this case, it seems to like
23 -- it warrants some confirmation that in fact a
24 process is now in place that will not do what this
25 says. Not properly characterize the radiation fields,

1 but will properly characterize the radiation fields.
2 MR. TESFAYE: Okay. And thank you. We
3 understand.
4 MEMBER RAY: All right.
5 MEMBER SUNSERI: Let me just ask a process
6 question then. From a process, I guess these RAIs get
7 resolved by any number of ways.
8 Direct input from the licensee, you might
9 have to go do an audit, or applicant. You might have
10 to do an audit or some other research, right, to
11 resolve it.
12 Whatever that res -- whatever the --
13 however they get resolved, I mean, we get a chance to
14 see that when we get the next phase of this review
15 with all the items closed, right?
16 MR. TESFAYE: That's correct. That's
17 correct.
18 MEMBER SUNSERI: Okay.
19 MR. TESFAYE: That's why --
20 MEMBER SUNSERI: Is that the safety net
21 for us?
22 MR. TESFAYE: Well, my understanding was
23 maybe members would like to see the result of the
24 audit before we come here next time.
25 MEMBER SUNSERI: Yeah. No, I understand

1 that there's a specific, you know, one. But, I'm --
2 I'm --
3 MR. TESFAYE: Yes.
4 MEMBER SUNSERI: I'm broadening that to
5 the process. I mean, there's other things out there,
6 right?
7 MR. TESFAYE: That's correct.
8 MEMBER SUNSERI: Okay. Thank you.
9 MEMBER RAY: No. It was just that in this
10 instance I thought it was warranted.
11 MEMBER SUNSERI: Yeah. No, I --
12 MEMBER RAY: Calling out and saying we
13 want to know more --
14 MEMBER SUNSERI: Yeah.
15 MEMBER RAY: Then you're able to tell us
16 now.
17 MEMBER SUNSERI: Right.
18 MR. TESFAYE: Sure. But --
19 MR. SNODDERLY: Again Matt, to follow up.
20 This is Mike Snodderly of the ACRS staff. I just want
21 to make sure what we're asking for, if anything.
22 I think you've set an expectation of what
23 you would like, of a conclusion that you expect to see
24 in the audit report. Which would be a publically
25 available audit report.

1 We're not asking them -- are we really
2 asking the staff to do something -- to issue an audit
3 --
4 MEMBER RAY: I would -- Mike, let me
5 interrupt you so we don't take up too much time.
6 I would like the staff to come back in and
7 say, the applicant properly characterizes the
8 radiation fields in and around the top of the
9 containment vessel. And we have assessed that audit
10 --
11 MR. SNODDERLY: May that be done in a
12 normal audit report?
13 MEMBER RAY: Huh?
14 MR. SNODDERLY: May that be done in a
15 normal audit report?
16 MEMBER RAY: Well, maybe. I'm not asking
17 for the audit report. I'm asking for the staff to
18 tell us that they have --
19 MR. SNODDERLY: Okay. So, as Sam said,
20 before someone does an audit, there is an audit,
21 publically available audit plan. And there is a
22 publically available audit report that ends all -- to
23 close the plan.
24 Are you asking for anything other than the
25 normal audit report that would be issued with a

1 conclusion, I imagine there will be a specific
2 conclusion relative to this finding.
3 MEMBER RAY: Yes. I am.
4 MR. SNODDERLY: Okay. We'll make sure you
5 get that.
6 MEMBER RAY: Well, I said yes. I'm asking
7 for something else.
8 MR. SNODDERLY: Oh.
9 MEMBER RAY: You were asking me, am I
10 asking you for anything other than an audit report?
11 And I said yes.
12 MR. SNODDERLY: Okay.
13 MEMBER BLEY: I think when they come back
14 on phase four.
15 MEMBER RAY: That's fine.
16 MEMBER BLEY: They ought to be able to say
17 what Harold just said.
18 MR. SNODDERLY: Right. And the audit
19 report will get you that.
20 MEMBER BLEY: And the end line.
21 MR. SNODDERLY: Right. And the audit
22 report will be done prior to that.
23 MEMBER RAY: I don't care about the audit
24 report, Mike specifically. I care about them being
25 able to say what they can't say today in phase four.

1 MR. SNODDERLY: And what?

2 MEMBER RAY: And they can show us the

3 audit report or not. I don't care.

4 MR. LEE: So we'll take it as an item for

5 us to follow up on. And when we have our phase five

6 ACRS meeting, we will address that point.

7 MEMBER RAY: Okay. Good. Thank you.

8 MR. LAVERA: I'd like to thank Sam for the

9 clarification on the RAIs. His statement of how we're

10 treating that information is factually correct.

11 We're just gathering the information

12 during the audit. We will evaluate the RAIs as we

13 normally do an RAI.

14 MEMBER RAY: Okay, but I'm just looking at

15 what's written.

16 MR. LAVERA: I understand. Thank you.

17 We're crafting on that part. I think we're on 16?

18 As stated before, the accident source

19 terms are under evaluation. When we get them we'll

20 look at them and that will be the subject for a later

21 discussion.

22 We're on Slide 17. The staff used the

23 information developed during the review of the sources

24 of radiation to inform the review of the facility

25 design features.

1 Specific areas of the review for Section
2 12.3 included facility design features provided to
3 prevent access to very high radiation areas, shielding
4 including the location, types and quantities of
5 shielding material, as well as any necessary
6 provisions to ensure the long-term viability of the
7 shielding material, ventilation including the
8 ventilation system flow rates, the location of
9 localized ventilation system components.
10 And the presence of absorption or
11 filtration media, radiation monitoring equipment
12 including radiation monitors to activate protective
13 features such as ventilation equipment, post-accident
14 radiation monitoring, and monitoring where fuel is
15 stored or handled, operational dose assessment
16 including dose reduction features resulting from the
17 assessment, and design features to minimize
18 contamination of the facility and the environment.
19 Next slide, please.
20 To assess the effectiveness of the
21 shielding for radiation sources described in Section
22 12.2, Radiation Sources, the staff used industry-
23 standard analytical packages such as MicroShield
24 Version 12 and where the geometry was more complex or
25 the type of radiation was outside the scope of

1 MicroShield, the staff used other analytical tools
2 such as SCALE 6.2, 6.3 and MCNP 6.2.
3 Next slide.
4 The qualification of criteria to be
5 applied to post-accident radiation monitors will be
6 reviewed as part of the previously discussed submittal
7 by the applicant for the use of an alternate accident
8 source term.
9 The design criteria for the post-accident
10 radiation monitors will receive further review during
11 that review process.
12 Next slide. The staff's review of this
13 area focused on whether the application contained
14 information about the design features provided to
15 demonstrate compliance with 10 CFR 20.1406.
16 With the exception of the pool leakage
17 detection system, CREI 9292, aspect of these design
18 features were only briefly reviewed by the staff. We
19 basically just verified that they had stuff in there
20 and it looked at reasonable and moved on.
21 The NRC staff does not review programs
22 during the design phase. The NRC will determine the
23 applicability and compliance with the program
24 requirements during the COL review phase.
25 Next slide. Since there was no previously

1 available operating experience directly related to the
2 NuScale design, the NRC staff reviewed operational
3 dose estimates provided by the applicant that were
4 based on scaled data of currently operating commercial
5 power-plants.
6 We agree that their numbers are reasonable
7 under the circumstances. The post-accident mission
8 dose estimates are expected to change based on the
9 applicant's stated intention to change the accident
10 source term and will be reviewed in the future.
11 Next slide, please.
12 The staff felt it was reasonable to assume
13 that because of the multi-module design and the use of
14 some shared facility, source terms within those SSCs
15 could contain a mixture of sources involving bell
16 fuel, normal operational sources as well as sources
17 decayed for longer than a single operating cycle.
18 This differs markedly from the review of
19 a single unit design where all of the sources of
20 radioactive material are expected to be from the unit
21 operating a design basis failed fuel fraction.
22 Next slide. The staff has focused on the
23 finish of the dry-dock area because it's expected to
24 be subject to wetting and drying every two months.
25 This is because of the continual refueling

type of cycle. We're using the ongoing audit as a venue for continued discussions on this topic.

Next slide. For this topic, the staff is waiting for the response to RAI 9656, which was recently issued.

Next slide. So we're on 25. The design of the bioshield was changed in order to accommodate design issues not related to the Chapter 12 review. The change to the bioshield design reincorporated the use of borated polyethylene shielding material.

The applicant provided a supplemental response to RAI 9294, Question 26 that provides NuScale's perspective on the long-term viability of the borated polyethylene material.

This response is currently under review by the staff. The staff is still waiting for a supplemental response to RAI 9298 to address the associated ITAC with the borated polyethylene.

Next slide. On this slide we would like point out an error. The reference to the RAI 9275 is incorrect. The correct number for the pool leakage detection system RAI is 9292.

As noted, the primary focus of the overall staff evaluation in RAI 9292 is related to ensuring the structural integrity of the safety-related SSCs

1 and not to minimize any contamination of the facility
2 or facilitating decommissioning.
3 Following the reference audit that was the
4 pool leakage detection system audit, the applicant
5 provided a supplemental RAI response which remains
6 under review by the staff.
7 Next slide, please. So, the NRC does not
8 review operational programs during the design phase,
9 therefore, the COL applicant will address those and
10 we'll review them then.
11 Next slide. Again, operational programs
12 are addressed during the COL phase and we'll address
13 them then. Are there any questions?
14 MEMBER SUNSERI: Okay, around the table,
15 any questions for staff on 12? No? Okay, Joy, do you
16 have any questions on 12?
17 MEMBER REMPE: No, I'm good, thanks.
18 MEMBER SUNSERI: All right, so now we will
19 look to the audience. Any members of the of the
20 public that would like to make a comment on Chapters
21 10, 11, or 12, please come to the mic.
22 And while we're waiting on that we'll open
23 the phone lines. So there's no one coming to the mic,
24 nobody in the audience, and now we'll turn to the
25 phone line.

1 Any member of the public that is listening
2 in on the phone line that would care to make a comment
3 on the discussions today regarding Chapters 10, 11, 12
4 of the NuScale Review?
5 MS. FIELDS: Excuse me, yes, this is Sarah
6 Fields. I have a couple of comments.
7 On the Chapter 12 NRC staff Review, I've
8 been looking at a PowerPoint that was sent out by Mr.
9 Snodderly, but the discussion, while kind of following
10 the NRC staff person, while I was following these
11 slides generally, the statements were quite often very
12 different from what was appearing on the slides.
13 So it was very difficult to follow and a
14 bit confusing. So it may be that there is actually
15 another different slide presentation but it was just
16 very difficult to follow.
17 MEMBER SUNSERI: All right, thank you for
18 that comment.
19 MS. FIELDS: I just have one other
20 comment. I didn't hear any analysis of the radiation
21 associated with the placement of spent fuel in the
22 spent fuel canisters at the time when that would be
23 happening, probably towards the end of the life of the
24 reactor, nor the possible radiation and radiation
25 protection associated with the placement of spent fuel

canisters into dry casks.

Thank you.

MEMBER SUNSERI: Okay, thank you. And just to follow up on your first question, the slides from this presentation today will be made publicly available so you can look forward to that.

Any other public comments?

MR. LAVERA: Did you want me to comment on her discussion of the dry casks?

MEMBER SUNSERI: No, we just receive the comments.

Okay, then the last thing here is then to go around the table for each ACRS Member to provide any final remarks, in particular, focus on anything that you would recommend consideration for our letter report on these topics today.

We'll start with Joy.

MEMBER REMPE: Thanks, Matt. I don't have anything for consideration. I did earlier but I wanted to thank everyone for their presentations today.

I appreciated that the NuScale did match the research provided and comparisons between the typical PWR and the NuScale information. So thank you.

1 MEMBER SUNSERI: Okay, now we'll go around
2 the table starting with Dennis.
3 MEMBER BLEY: Nothing more to add.
4 MEMBER SUNSERI: Mike?
5 MEMBER CORRADINI: Nothing.
6 MEMBER SUNSERI: Harold?
7 MEMBER RAY: Nothing more than I said.
8 MEMBER SUNSERI: Okay, and for Dennis and
9 Mike, did Dick or Walt give you all anything?
10 MEMBER CORRADINI: They said they would
11 send us something by email on this.
12 MEMBER SUNSERI: Okay, thank you. Ron?
13 MEMBER BALLINGER: Nothing further.
14 MEMBER SUNSERI: Charlie?
15 MEMBER BROWN: Nothing further.
16 MEMBER SUNSERI: Vesna?
17 MEMBER DIMITRIJEVIC: Nothing further.
18 MEMBER SUNSERI: Okay, and then we'll ask
19 the -- go ahead.
20 DR. SCHULTZ: Nothing further, thank you.
21 MEMBER SUNSERI: And?
22 MEMBER CHU: I just want to thank all the
23 presenters from NuScale as well as from NRC staff.
24 Thank you very much.
25 MEMBER SUNSERI: There are two items out

of the Chapter 10 Review that I just want to highlight for consideration. I know we talked a lot about the overspeed, I'm going to recommend that be covered during the Chapter 3 Reviews.

So we won't have any significant comment about that in the Chapter 10 report.

MEMBER BROWN: What was the subject?

MEMBER SUNSERI: The overspeed, turbine overspeed protection. Actually, protection of components from overspeed.

MEMBER BROWN: Yes, the missile concerns.

MEMBER SUNSERI: Correct. Yes, and then I don't know, I haven't made my mind up on this but I think there's enough questions about this main steam isolation valve with the ball valve and the information that we have or don't have about that, that we might dig into that a little bit more, make some comment.

Dennis, you want to say something? No. Okay, so anybody else? All right, well, that's it and we will adjourn today's meeting.

(Whereupon, the above-entitled matter went off the record at 2:13 p.m.)

March 11, 2019 Docket No. 52-048

U.S. Nuclear Regulatory Commission
ATTN: Document Control Desk
One White Flint North
11555 Rockville Pike
Rockville, MD 20852-2738

SUBJECT: NuScale Power, LLC Submittal of Presentation Materials Entitled "ACRS Presentation Chapter 10 – Steam and Power Conversion System," PM-0219-64501 Revision 1

The purpose of this submittal is to provide the revised presentation materials for use during the upcoming Advisory Committee on Reactor Safeguards (ACRS) NuScale Subcommittee meeting that was rescheduled from February 20 to March 21, 2019. The materials support NuScale's presentation of Chapter 10, "Steam and Power Conversion System," of the NuScale Design Certification Application.

Enclosure 1 is the presentation entitled "ACRS Presentation Chapter 10 – Steam and Power Conversion System," PM-0219-64501, Revision 1. The first slide was revised to reflect the new meeting date. There are no other changes in the presentation from when it was sent to the ACRS on January 23, 2019.

This letter makes no regulatory commitments and no revisions to any existing regulatory commitments.

If you have any questions, please contact Carrie Fosaaen at 541-452-7126 or at cfosaaen@nuscalepower.com.

Sincerely,

Zackary W. Rad
Director, Regulatory Affairs
NuScale Power, LLC

Distribution: Robert Taylor, NRC, OWFN-7H4
Michael Snodderly, NRC, TWFN-2E26
Gregory Cranston, NRC, OWFN-8H12
Samuel Lee, NRC, OWFN-8H12
Omid Tabatabai, NRC, OWFN-8H12

Enclosure 1: "ACRS Presentation Chapter 10 – Steam and Power Conversion System," PM-0219-64501, Revision 1

Enclosure 1:

"ACRS Presentation Chapter 10 – Steam and Power Conversion System," PM-0219-64501, Revision 1

NuScale FSAR Tier 2, Ch. 10 ACRS Presentation

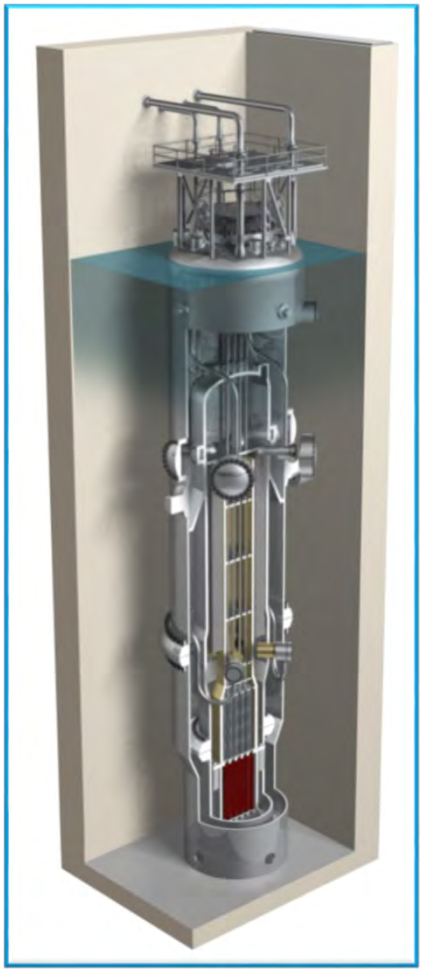

Zack Houghton, P.E.

Mechanical Design Engineering Manager

March 21st, 2019

PM-0219-64501
Revision: 1

Template #: 0000-21727-F01 R5

Acronyms

ABS: Auxiliary Boiler System
CARS: Condenser Air Removal System
CFWS: Condensate and Feedwater System
CNTS: Containment System
COL: Combined Operating License
CPS : Condensate Polishing System
CWS: Circulating Water System
DCA: Design Certification Application
DHR HX: Decay Heat Removal Heat Exchanger
EPRI: Electric Power Research Institute
FAC: Flow-accelerated Corrosion
FW: Feedwater
FWRV: Feedwater Regulation Valve
FWT : Feedwater Treatment System
GDC: General Design Criteria
HP: High Pressure
IP: Intermediate Pressure
ITAAC: Inspections, Tests, Analyses, and Acceptance Criteria
LP: Low Pressure
MC: Main Condenser
MS: Main Steam
MSIBV: Main Steam Isolation Bypass Valve
MSIV: Main Steam Isolation Valve
MSS: Main Steam System
MSSV: Main Steam Safety Valve
NEI: Nuclear Energy Institute
NS: Non safety-related
NSAC: Nuclear Safety Analysis Center
PDC: Principal Design Criteria
RG: Regulatory Guide
RIT: Radiation Indicating Transmitter
RT: Radiation Transmitter
RXB: Reactor Building
SR: Safety-related
SG: Steam generator
TEWAC: Totally Enclosed Water to Air Cooled
TG: Turbine generator
TGS: Turbine Generator System
VFD: Variable Frequency Drive

Ch. 10 - Topics

- 10.1 Summary description
- 10.2 Turbine Generator
- 10.3 Main Steam Supply System
- 10.4 Other Features of Steam and Power Conversion System

Ch. 10.1 Summary Description

- The NuScale steam and power conversion system is comprised of the following systems:
  - Turbine generator system
  - Main steam system
  - Main condenser
  - Condenser air removal system
  - Turbine gland sealing system
  - Turbine bypass system
  - Circulating water system
  - Condensate polishing system
  - Condensate and feedwater system
  - Auxiliary boiler system
  - Feedwater treatment system

Ch. 10.1 Summary Description

Figure 10.1-1: Power Conversion System Block Flow Diagram

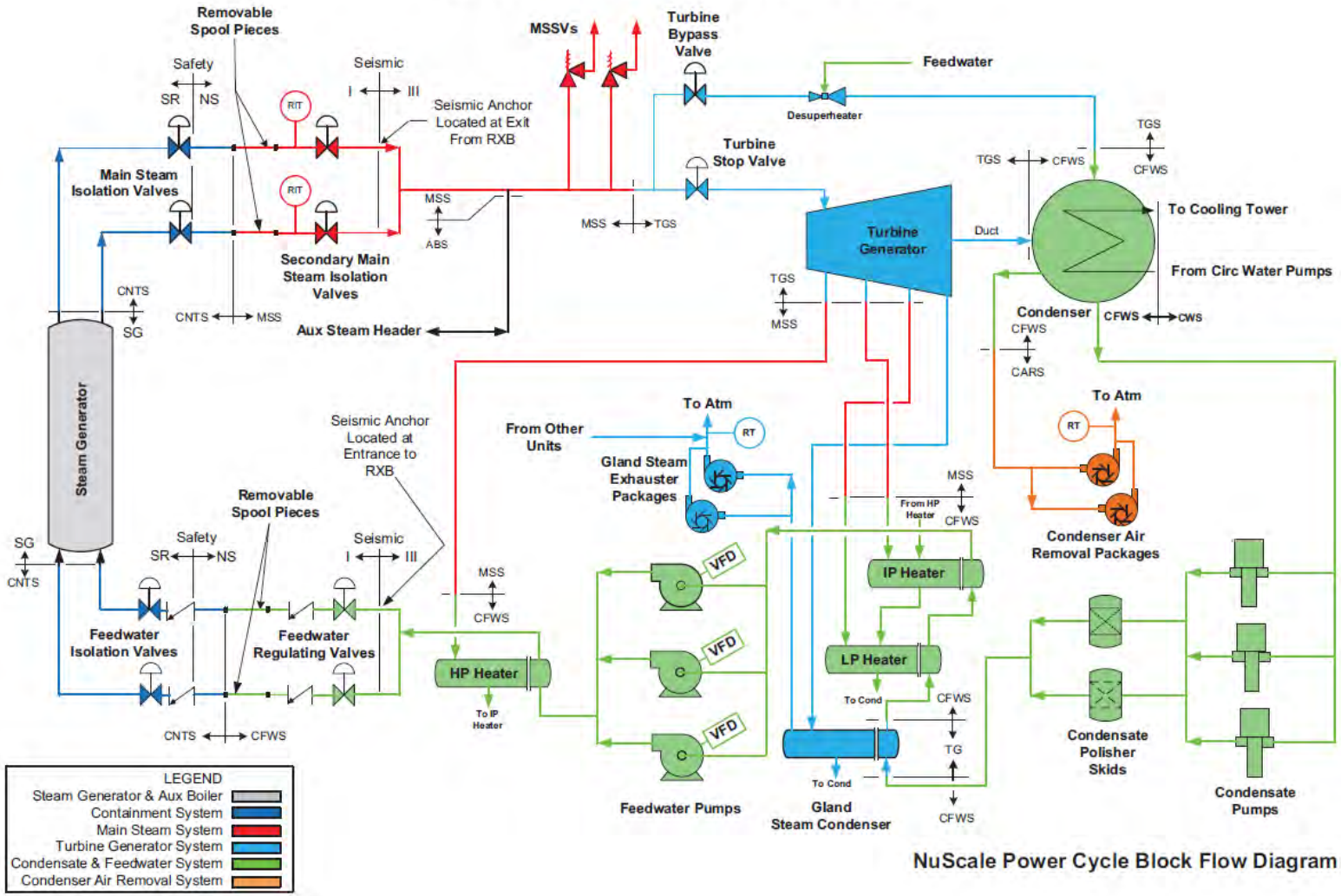

Ch. 10.1 Summary Description

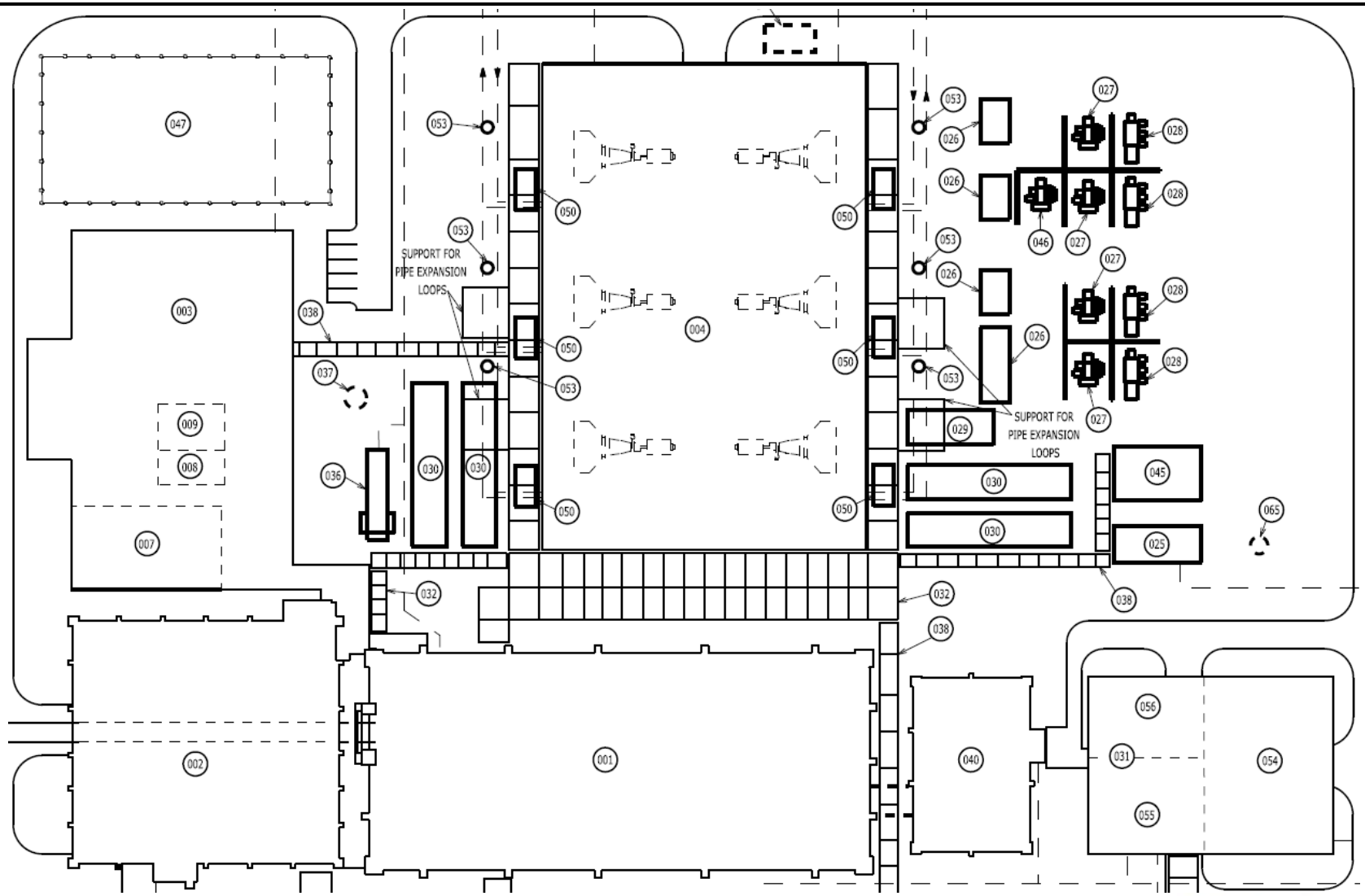

Power Island Layout

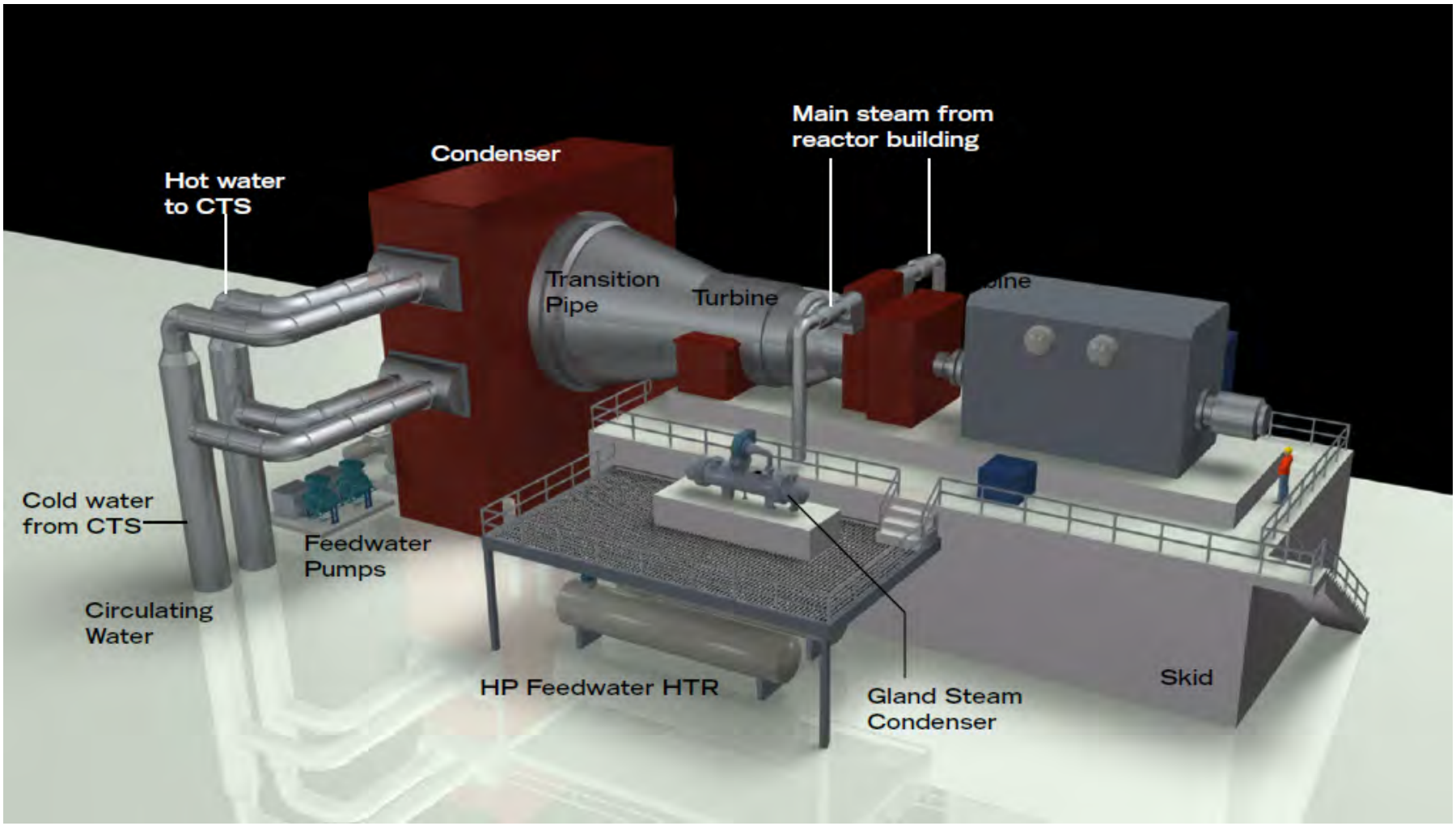

Ch 10.2 Turbine generator system

- Converts thermal energy from SG into rotational energy
- Turbine control valves regulate steam flow from SG
- Generator directly coupled with turbine
- Vendor to be selected by COL applicant

Component	Parameter	Value
Turbine	Rotor	Single Turbine, 10 stage condensing
	RPM	3600 rpm
Generator	Power Output	50 MWe
	Cooling Type	TEWAC

Missile Protection

- Missile protection addressed in Section 3.5
  - All essential equipment located inside the reactor or control buildings
  - Barrier approach taken per RG 1.115 to credit reactor and control building walls as a missile barrier.
  - No missile generation probability analysis or rotor integrity program credited
  - Overspeed protection system similar in design to industry standard

Turbine Bypass

- Turbine bypass system
  - Capable of supplying 100% rated power steam flow to main condenser
  - Minimized potential for main steam release or reactor trip on load rejection

10.3 Main Steam System

- Main Steam System
  - Delivers steam from steam generators to:
    - Turbine generator
    - Gland seal regulator
    - Directly to condenser through bypass valve
  - Provides means of dissipating residual and sensible heat generated by module during hot standby and cooldown operations by bypassing turbine to main condenser
  - Transports extraction steam from turbine to feedwater heaters

10.3 Main Steam System

- Main Steam System Boundary

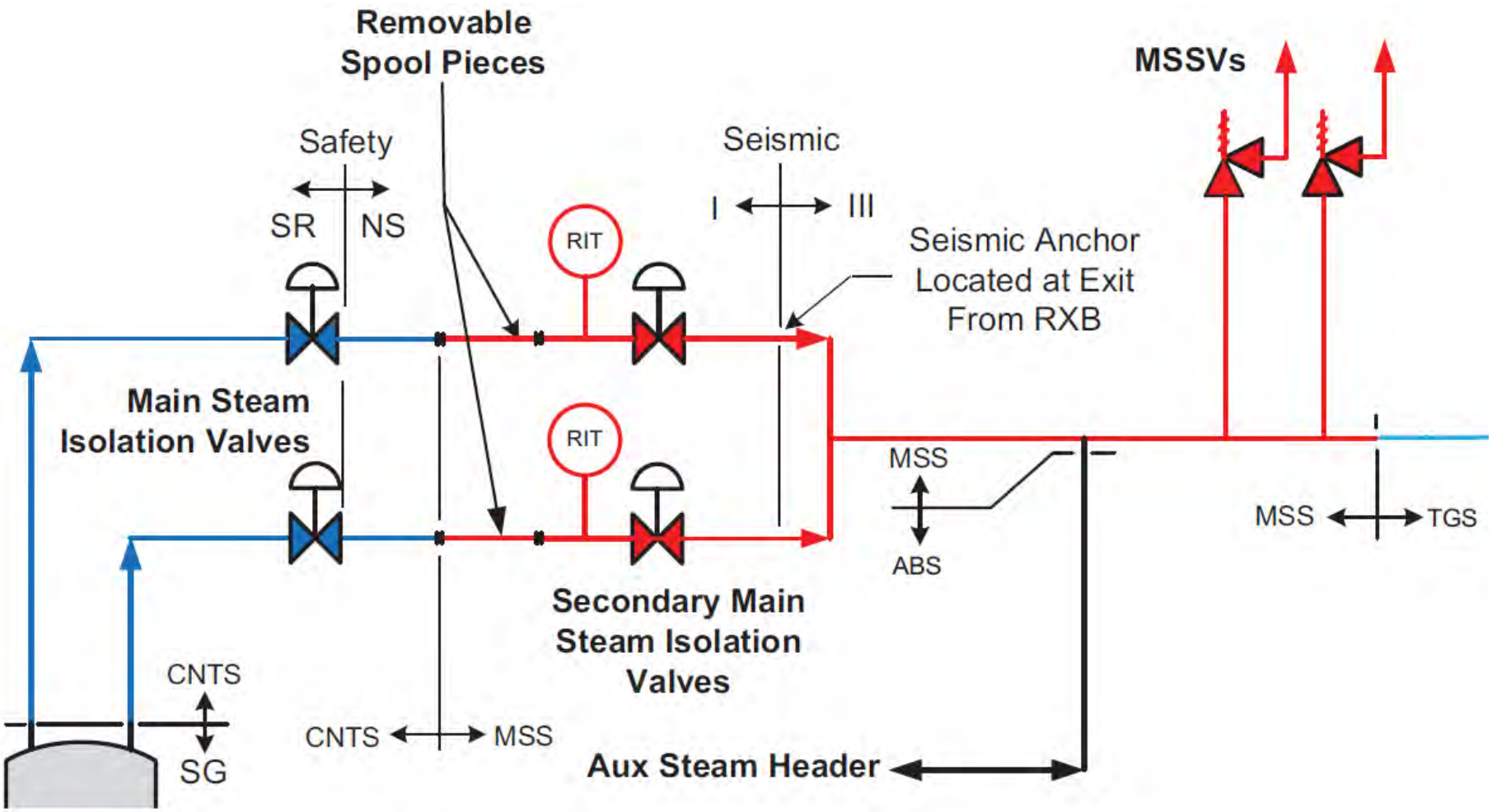

10.3 Main Steam System

- Secondary steam isolations provided as backup to MSIVs
  - Nonsafety-related
  - Credited as backup protection for the safety-related isolations
  - Periodically tested per the Inservice Testing Program
  - Included within Technical Specifications
- Main Steam and Feedwater isolation valves are part of the containment system addressed in Chapter 6

10.4 Other Features

- Condensate and feedwater system (CFWS)
  - Supplies FW at necessary temperature, pressure, and chemistry to steam generator
  - Consists of:
    - Main Condenser
    - Condensate storage tank
    - Three feedwater pumps (2x 50% capacity, 1 on standby)
    - Three condensate pumps (2x 50% capacity, 1 on standby)
    - Three feedwater heaters (high, intermediate, and low-pressure)
    - Feedwater regulating and check valves
    - Condensate polishing subsystem
    - Feedwater treatment subsystem

10.4 Other Features

- Condensate and Feedwater System Boundary

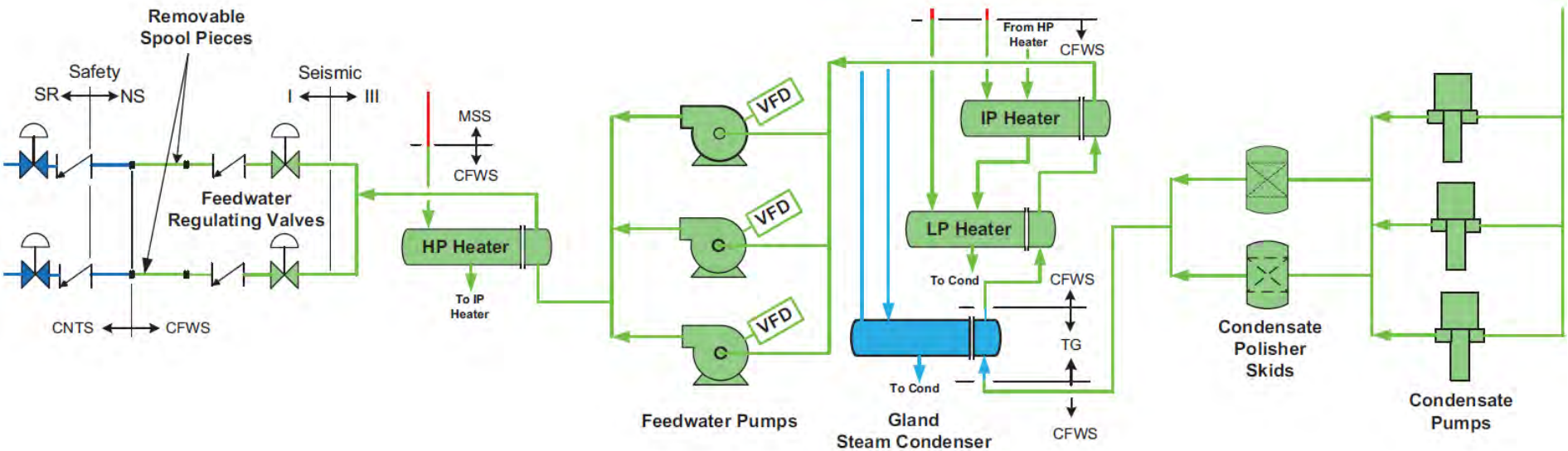

10.4 Other Features

- Feedwater Regulating Valves (FWRV) and Backup Feedwater Check Valves
  - Nonsafety-related
  - Credited as backup protection for the safety-related isolations
  - Periodically tested per the Inservice Testing Program
  - Included within Technical Specifications

10.4 Other Features

- Feedwater treatment and condensate polishing
  - Full flow condensate polishing
  - All volatile chemistry (amine to control pH, oxygen scavenger to control dissolved oxygen)
  - Controls erosion and corrosion of CFWS components by monitoring and maintaining pH and dissolved oxygen levels
  - Chemistry program based on current revision of the EPRI PWR Secondary Water Chemistry Guidelines and NEI 97-06 (Steam Generator Program)

10.4 Other Features

- Circulating water system (CWS)
  - Provides cooling water to main condenser
  - Two identical circulating water systems, each providing cooling water to six main condensers

10.4 Other Features

- Auxiliary boiler system (ABS)
  - Supplies steam to systems when main steam is not available or not preferred
  - High-pressure feeds module heatup system during startup
  - Low-pressure feeds turbine gland seals, main condenser for deaeration, and condensate polishing regeneration system

Ch. 10 COL Items

Item No.	Description of COL Info Item
10.3-1	A COL applicant that references the NuScale Power Plant design certification will provide a site-specific chemistry control program based on the latest revision of the Electric Power Research Institute Pressurized Water Reactor Secondary Water Chemistry Guidelines and Nuclear Energy Institute (NEI) 97-06 at the time of the COL application.
10.3-2	A COL Applicant that references the NuScale Power Plant design certification will provide a description of the flow-accelerated corrosion monitoring program for the steam and power conversion systems based on Generic Letter 89-08 and the latest revision of the Electric Power Research Institute NSAC-202L at the time of the COL application.
10.4-1	A COL applicant that references the NuScale Power Plant design certification will determine the size and number of new and spent resin tanks in the condensate polishing system.
10.4-2	A COL applicant that references the NuScale Power Plant design certification will describe the type of fuel supply for the auxiliary boilers.
10.4-3	A COL applicant that references the NuScale Power Plant design certification will provide a secondary water chemistry analysis. This analysis will show that the size, materials, and capacity of the feedwater treatment system equipment and components satisfies the water quality requirements of the secondary water chemistry program described in Section 10.3.5, and that it is compatible with the chemicals used.

Open Items

Item #	Summary Description
8.3-1	Related to requested exemption from GDC/PDC 34, “Residual Heat Removal,” with respect to the system function of transferring residual and sensible heat from the reactor coolant system.

Confirmatory Items (CI)

RAI Question #	NRC CI	Summary Description
10.03.06-5	10.3.6-1 10.3.6-3	Request to re-include text related to the FAC program into COL Item 10.3-2 and Section 10.3.6.3. The DCA was revised as requested.
10.03.06-6	None	Request to revise FSAR Tier 2, Section 10.3.6 to only discuss the non-safety related portions of the steam and power conversion systems. The DCA was revised as requested.
10.03.06-7	10.3.6-2	Request to revise the DCD to include justification describing how the NuScale SG program meets NEI 97-6 and EPRI SG management program guidance. The DCA was revised as requested.
10.04.06-7	None	Request to explicitly include EPRI Action Levels for secondary water chemistry into COL Item 10.3-1. NuScale considered the COL item adequate as written.
Conference Call	10.4.7-1	Request to include additional discussion on the role of maintenance and operating procedures on minimizing the occurrence of water hammer. The DCA was revised as requested.
Conference Call	10.4.11-1	Request to remove Table 10.4-22 and specify that tanks are constructed of corrosion resistant materials compatible with chemicals used. The DCA was revised as requested.

RAIs

- Unresolved Closed

Question #	Summary Description
10.02-1	TGS – turbine overspeed trip setpoint, single failure criteria and protection against common cause failures
10.02-2	TGS – overspeed trip system diversity, defense-in-depth, trip logic, common components and impact of component failures
10.02.03-1	Request for ITAAC related to turbine rotor integrity/turbine missiles
10.02.03-2	Request for COL item related to a turbine inspection and testing program

- Waiting for Response/Supplemental

Question #	Summary Description
10.04.07-3	Request for COL item to provide operating and maintenance procedures to address water hammer issues for the CFWS
10.02-3	TGS – two independent diverse emergency overspeed protection trip systems

Portland Office
6650 SW Redwood Lane,
Suite 210
Portland, OR 97224
971.371.1592

Corvallis Office
1100 NE Circle Blvd., Suite 200
Corvallis, OR 97330
541.360.0500

Rockville Office
11333 Woodglen Ave., Suite 205
Rockville, MD 20852
301.770.0472

Charlotte Office
2815 Coliseum Centre Drive,
Suite 230
Charlotte, NC 28217
980.349.4804

Richland Office
1933 Jadwin Ave., Suite 130
Richland, WA 99354
541.360.0500

Arlington Office
2300 Clarendon Blvd., Suite 1110
Arlington, VA 22201

London Office
1st Floor Portland House
Bressenden Place
London SW1E 5BH
United Kingdom
+44 (0) 2079 321700

http://www.nuscalepower.com
Twitter: @NuScale_Power

NUSCALE™
Power for all humankind

Backup Slides

Heat Balance

Figure 10.1-2: Flow Diagram and Heat Balance Diagram at Rated Power for Steam and Power Conversion System Cycle

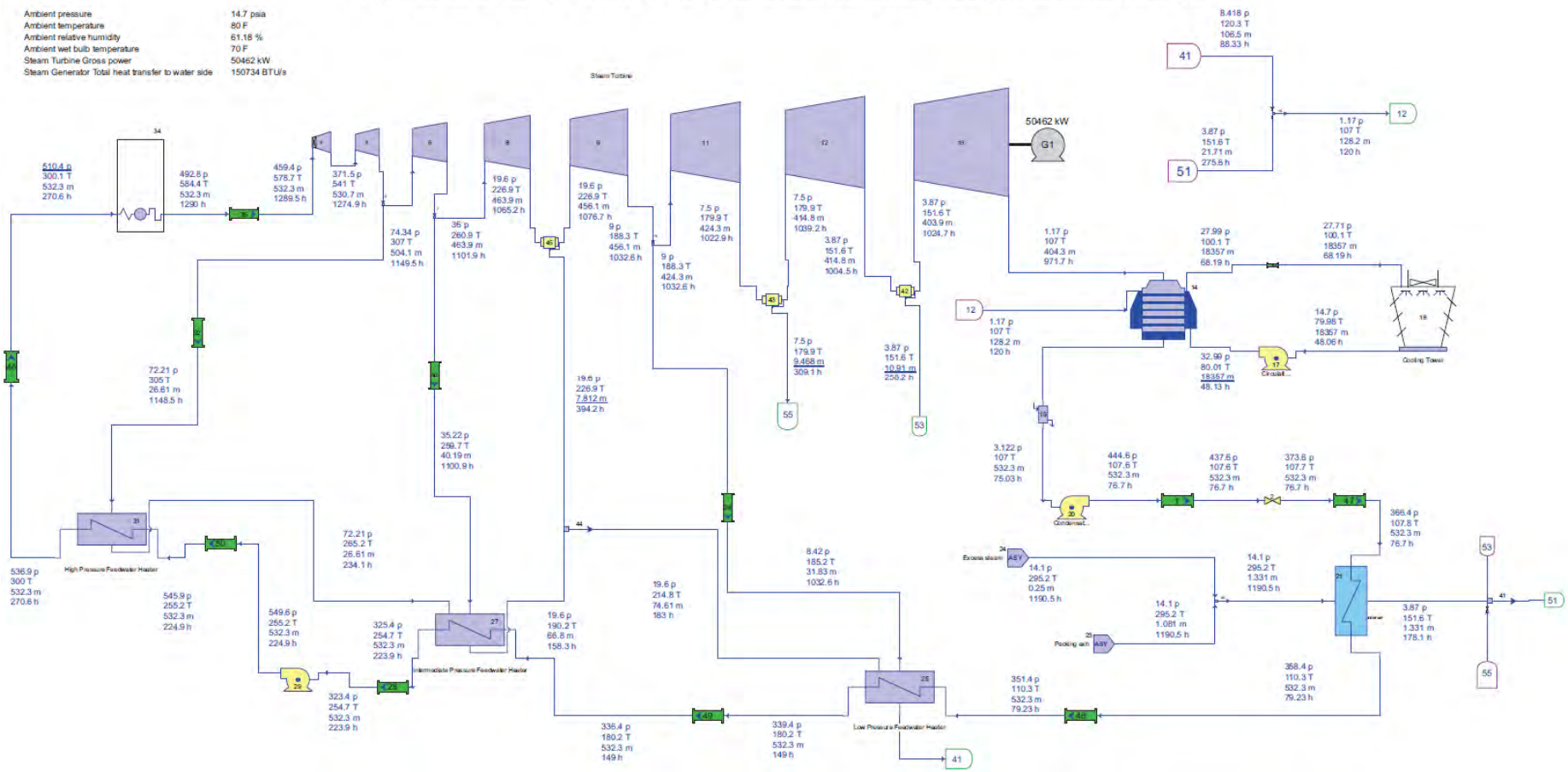

U.S.NRC

United States Nuclear Regulatory Commission

Protecting People and the Environment

Safety Evaluation with Open Items: Chapter 10, "Steam and Power Conversion System"

NuScale Design Certification Application

ACRS Subcommittee Meeting
March 21, 2019

Agenda

- NRC Staff Review Team
- Summary of the NRC Staff's Review
- Sections 10.2, 10.4.1-10.4.5, 10.4.7, and 10.4.10
- Sections 10.3
- Sections 10.3.6
- Section 10.3.5, 10.4.6, 10.4.11
- Abbreviations

NRC Staff Review Team

- NRC Technical Reviewers
  - Angelo Stubbs, NRO
  - Robert Vettori, NRO
  - Nicholas McMurray, NRO
  - Alexander Chereskin, NRR
  - Ryan Nolan, NRO
  - Gregory Makar, NRO
  - Thinh Dinh, NRR
  - Dennis Andrukat, NMSS
- Project Management
  - Omid Tabatabai, Senior Project Manager
  - Greg Cranston, Lead Project Manager

U.S.NRC
UNITED STATES NUCLEAR REGULATORY COMMISSION
Protecting People and the Environment

Summary of the Staff's Review

- NRC Staff's safety evaluation report (SER) is based on DCA, Rev. 1,
- During the review, the NRC staff issued 12 RAIs containing 37 Questions,
- SER contains no Open Items and six Confirmatory Items,
- NuScale has incorporated information in Rev. 2 to the DCA to address staff's Confirmatory Items.

U.S.NRC
UNITED STATES NUCLEAR REGULATORY COMMISSION
Protecting People and the Environment

Staff's Evaluation of Sections:

10.2 Turbine Generator (TG)
10.4.1 Main Condensers (MC)
10.4.2 Condenser Air Removal System (CARS)
10.4.3 Turbine Gland Sealing System (TGSS)
10.4.4 Turbine Bypass System (TBS)
10.4.5 Circulating Water System (CWS)
10.4.7 Condensate and Feedwater System (CFS)
10.4.10 Auxiliary Boiler System (ABS)

Presenter: Angelo Stubbs, Senior Reactor Systems Engineer, NRO

SER Sections 10.2 –Turbine Generator

Key Design Considerations and Features of Turbine Generator System (TGS)

- The TGS is not safety-related and not used during or after an accident
- The TG Building does not contain SSCs important to safety
- TGS failure may result in the ejection of turbine missiles that can potentially impact SSCs outside of the turbine building

Review Considerations

- Reviewed for compliance with GDC 4

COL Items

None

Open Items

None

Confirmatory Items

None

U.S.NRC
UNITED STATES NUCLEAR REGULATORY COMMISSION
Protecting People and the Environment

Regulatory Basis

- 10 CFR Part 50, Appendix A, GDC 4 “Environmental and dynamic effects design basis”
- Compliance with GDC 4 requires that structures, systems, and components important to safety shall be designed to accommodate the effects of and to be compatible with the environmental conditions associated with normal operation, maintenance, testing, and postulated accidents, including loss-of-coolant accidents.

Guidance Documents

- NUREG 800, Sections 10.2 – Turbine Generator and 3.5.3–Barrier Design Procedures
- Regulatory Guide 1.115 – Protection Against Turbine Missiles

Methods of Compliance with GDC 4

- Minimization of turbine missile generation probability based on turbine design, operation, and maintenance
- Use plant layout and physical missile barriers to protect against turbine missiles

Staff's Review and Results

- The NRC staff reviewed the Turbine Generator described in Sections 10.2 of the NuScale Design certification application using guidance provide in NUREG-0800, Section 10.2 and Regulatory Guide 1.115.
- The design was reviewed for compliance with GDC 4.
- The Staff found that since the Turbine Building contains no equipment needed for safe shutdown and all SSC important to safety are housed in the reactor building and control building which the applicant indicates will be designed to protect against turbine missiles. That the design is in compliance with GDC 4.
- The ability of the reactor building to serve as barrier for protection against turbine missiles is currently under review in Chapter 3

NuScale Design Certification Review
Chapter 10 – SER Sections 10.4.1-10.4.5

- 10.4.1 Main Condensers (MC)
- 10.4.2 Condenser Air Removal System (CARS)
- 10.4.3 Turbine Gland Sealing System (TGS)
- 10.4.4 Turbine Bypass System (TBS)
- 10.4.5 Circulating Water System (CWS)

U.S.NRC
UNITED STATES NUCLEAR REGULATORY COMMISSION
Protecting People and the Environment

Key Design Considerations and Features (MC, CARS, TGSS, TBS, and CWS)

- These systems are part of the Steam and Power Conversion System
- These system are not safety-related and are not used during or after an accident
- These systems are not located in proximity of important to safety SSCs.
- These systems do not share piping or components with safety-related systems.
- These systems are provided with the capability of monitoring and controlling the release of radioactive effluents to the environment.

Review Considerations

- Reviewed for compliance with GDC's 2, 4, 5, 60, and 64 and 10CFR 20.1406

COL Items

None

Open Items

None

Regulatory Basis

- 10 CFR Part 50, Appendix A, GDC 2 “Design bases for protection against natural phenomena” GDC 2 requires that structures, systems, and components important to safety shall be designed to withstand the effects of natural phenomena such as earthquakes, tornadoes, hurricanes, floods, tsunami, and seiches without loss of capability to perform their safety functions.

- GDC 4 “Environmental and dynamic effects design basis” Compliance with GDC 4 requires that structures, systems, and components important to safety shall be designed to accommodate the effects of and to be compatible with the environmental conditions associated with normal operation, maintenance, testing, and postulated accidents, including loss-of-coolant accidents.

- GDC 5 “Sharing of Structures, systems, and components,” requires that structures, systems, and components important to safety shall not be shared among nuclear power units unless it can be shown that such sharing will not significantly impair their ability to perform their safety functions, including, in the event of an accident in one unit, an orderly shutdown and cooldown of the remaining units.

Regulatory Basis (Cont'd)

- GDC 60 "Control of releases of radioactive materials to the environment," requires that the nuclear power unit design shall include means to control suitably the release of radioactive materials in gaseous and liquid effluents and to handle radioactive solid wastes produced during normal reactor operation, including anticipated operational occurrences.
- GDC 64 "Monitoring radioactivity releases," requires that means shall be provided for monitoring the reactor containment atmosphere, spaces containing components for recirculation of loss-of-coolant accident fluids, effluent discharge paths, and the plant environs for radioactivity that may be released from normal operations, including anticipated operational occurrences, and from postulated accidents.
- 10 CFR 20.1406 "Minimization of contamination," which requires that applicants for standard design certifications, standard design approvals, and manufacturing licenses under part 52 shall describe in the application how facility design will minimize, to the extent practicable, contamination of the facility and the environment, facilitate eventual decommissioning, and minimize, to the extent practicable, the generation of radioactive waste.

Staff's Review and Results

- The NRC staff reviewed the systems described in Sections 10.4.1-10.4.5 of DCA, Part 2, Tier 2
- The staff utilized the guidance provide in NUREG-0800, Section 10.4.1 – 10.4.5 in conducting its review.
- The staff reviewed the design for compliance with the regulatory requirements listed above.
- Based on its review staff have made the following findings:

U.S.NRC
UNITED STATES NUCLEAR REGULATORY COMMISSION
Protecting People and the Environment

Staff's Review and Results

- **GDCs 2 & 4** – The staff finds that the MC, CARS, TGSS, TBS, and CWS are in compliance with these GDCs
- **GDC 5 -** The staff finds that the MC, CARS, TGSS, TBS and CWS are in compliance with GDC 5
- **GDCs 60 & 64** – The staff finds that the MC, CARS, TGSS, and CWS are in compliance with these GDCs
- **10 CFR 20.1406 -** The staff finds that the MC, CARS, TGSS, TBS and CWS in compliance 10 CFR 20.1406 based on their adherence to the guidance in Regulatory Guide 4.21

SER Sections 10.4.7 – Condensate and Feedwater System

Key Design Considerations and Features (CFWS)

- The CFWS is not safety-related and not used during or after an accident
- The feedwater system isolation is necessary for proper DHRS operation
- Feedwater Isolation valves are safety-related and seismic Cat. I

Review Considerations

- Reviewed for compliance with GDCs 2,4,5,45,46, and 10 CFR 20.1406

COL Items

None

Open Items

None

Regulatory Basis

- GDC 2 - Design bases for protection against natural phenomena
- GDC 4 - Environmental and dynamic effects design basis
- GDC 5 - Sharing of Structures, systems, and components
- GDC 45 – Inspection of cooling water system
- GDC 46 – Testing of cooling water system
- 10 CFR 20.1406 “Minimization of contamination

U.S.NRC
UNITED STATES NUCLEAR REGULATORY COMMISSION
Protecting People and the Environment

Staff's Review and Results

- The NRC staff reviewed the Condensate and Feedwater System described in Sections 10.4.7 of the NuScale Design certification application using guidance provide in Design Specific Review Standard (DSRS) 10.4.7.

- The design was reviewed for compliance with GDCs 2,4,5, 45, 46 and 10 CFR 20.1406.

- The Staff found the Condensate and Feedwater System to be in compliance with the above regulations.

SER Sections 10.4.10 – Auxiliary Boiler System

Key Design Considerations and Features (ABS)

- The ABS is not safety-related and not used during or after an accident
- The ABS is a shared system that provides steam module heatup system

Review Considerations

- Reviewed for compliance with GDCs 2,4,5, 60, 64 and 10 CFR 20.1406

COL Item 10.4-2:

- A COL applicant that references the NuScale Power Plant design certification will describe the type of fuel supply for the auxiliary boilers.

Regulatory Basis

- GDC 2 - Design bases for protection against natural phenomena
- GDC 4 - Environmental and dynamic effects design basis
- GDC 5 - Sharing of Structures, systems, and components
- GDC 60 – Control of releases of radioactive materials to the environment
- GDC 64 – Monitoring radioactivity releases
- 10 CFR 20.1406 - Minimization of contamination

Staff's Review and Results

- The design was reviewed for compliance with GDCs 2,4,5, 60, 64 and 10 CFR 20.1406.
- The Staff found the Auxiliary Boiler System to be in compliance with the applicable regulations.

Staff's Evaluation of Section

10.3 Main Steam System

Presenter: Robert Vettori, Fire Protection Engineer, NRO

Regulatory Basis

- GDC 2, “Design bases for protection against natural phenomena,” requires that SSCs important to safety be designed to withstand the effects of natural phenomena such as earthquakes, tornadoes, hurricanes, floods, tsunami, and seiches without loss of capability to perform their safety functions.
- GDC 4, “Environmental and dynamic effects design basis,” requires that SSCs important to safety be designed to accommodate the effects of and to be compatible with the environmental conditions associated with normal operation, maintenance, testing, and postulated accidents, including loss-of-coolant accidents.
- GDC 5, “Sharing of structures, systems and components,” requires that SSCs important to safety shall not be shared among nuclear power units unless it can be shown that such sharing will not significantly impair their ability to perform their safety functions, including, in the event of an accident in one unit, an orderly shutdown and cooldown of the remaining units.

Regulatory Basis (Cont'd)

- GDC 34, "Residual heat removal," requires that a system to remove residual heat be provided.

- 10 CFR 50.63, "Loss of All Alternating Current," requires that a nuclear power plant have the ability to withstand for a specified duration and recover from a station blackout (SBO) as defined in 10 CFR 50.2.

Review Guidance

- The NRC staff reviewed the Section using NuScale design specific review standard (DSRS) 10.3, “Main Steam Supply System.”

Staff's Review of DCA, Section 10.3

- The NuScale design defines the MSS as only the portions from the flanges immediately downstream of the containment system (CNTS) main steam isolation valves (MSIVs) up to the turbine stop valves.
- The staff performed its review consistent with the system boundaries defined in NuScale DSRS 10.3, "Main Steam Supply System." The main steam system extends from the outlet of the reactor pressure vessel (RPV) steam plenum (on the secondary side of the SGs) up to and including the turbine stop valves.

U.S.NRC
UNITED STATES NUCLEAR REGULATORY COMMISSION
Protecting People and the Environment

Staff's Review of DCA, Section 10.3 (Cont'd)

- ITAAC for portions of the safety related SSC of the main steam system are located in DCA, Part 2, Tier 1.
- The staff evaluation of technical specifications and associated bases are located in Chapter 16 of this SER.
- There are no combined license information items associated with the MSS.
- Five RAIs were submitted concerning Section 10.3, all are closed and resolved.

Conclusion

- The MSS for the NuScale design satisfies the relevant requirements as described in the Regulatory Basis.

Staff's Evaluation of Section

10.3.6 Steam and Feedwater System Materials

Presenter: Nicholas McMurray, Materials Engineer, NRO

Regulatory Basis

- 10 CFR Part 50, Appendix A, GDC 1, “Quality Standards and Records,” requires that SSCs important to safety shall be designed, fabricated, erected, and tested to quality standards commensurate with the importance of the safety functions to be performed.
- 10 CFR Part 50, Appendix A, GDC 35, “Emergency Core Cooling,” states that a system to provide abundant emergency core cooling shall be provided. The system safety function shall be to transfer heat from the reactor core following any loss of reactor coolant at a rate such that (1) fuel and clad damage that could interfere with continued effective core cooling is prevented and (2) clad metal-water reaction is limited to negligible amounts.
- 10 CFR Part 50, Appendix B, Criterion XIII, “Handling, Storage and Shipping,” requires that measures be established to control the handling, storage, shipping, cleaning, and preservation of materials and equipment to prevent damage or deterioration.
- 10 CFR 50.65, “Requirements for monitoring the effectiveness of maintenance at nuclear power plants,” requires that power reactor licensees monitor the performance or condition of SSCs against licensee-established goals in a manner sufficient to provide reasonable assurance that such SSCs are capable of fulfilling their intended functions.

Review Guidance

- NUREG-0800, Section 10.3.6, “Steam and Feedwater System Materials,” Revision 3, dated March 2007
- Generic Letter 89-08, “Erosion/Corrosion- Induced Pipe Wall Thinning,” dated May 1989
- Electric Power Research Institute, NSAC-202L-R3, “Recommendations for an Effective Flow-Accelerated Corrosion Program,” Revision 3, dated May 2006

U.S.NRC
UNITED STATES NUCLEAR REGULATORY COMMISSION
Protecting People and the Environment

Staff's Review of DCA, Section 10.3.6

- The staff reviewed the materials of the MSS, CFWS, TGS, ABS, and associated subsystems. These systems are outside of CNV, not safety-related, and do not perform a nuclear safety function.
  - The CNTS isolation valve and DHRS materials are reviewed in Section 6.1.1, "Engineered Safety Feature Materials"
- Systems are designed to ASME B31.1 and Quality Group D
- The design meets the guidance of GL 89-08 and EPRI NSAC-202L-R3, and the selected materials minimize the impact of FAC.

U.S.NRC
UNITED STATES NUCLEAR REGULATORY COMMISSION
Protecting People and the Environment

Staff's Review of DCA, Section 10.3.6

- **COL Item 10.3-2:** A COL Applicant that references the NuScale Power Plant design certification will provide a description of the flow-accelerated corrosion monitoring program for the steam and power conversion systems based on Generic Letter 89-08 and the latest revision of the Electric Power Research Institute NSAC-202L at the time of the COL application.
- **Confirmatory Items 10.3.6-1, 10.3.6-2, and 10.3.6-3**: Include information from RAI responses in to the next revision of the DCA related to FAC, the impacted piping systems, and controlling contamination.

Staff's Evaluation of Sections:

10.3.5 Secondary Water Chemistry
10.4.6 Condensate Polishing System
10.4.11 Feedwater Treatment System

Presenter: Alexander Chereskin, Chemical Engineer, NRR

U.S.NRC
UNITED STATES NUCLEAR REGULATORY COMMISSION
Protecting People and the Environment

Regulatory Basis

- 10 CFR Part 50, Appendix A, GDC 14, “Reactor Coolant Pressure Boundary,” requires that the reactor coolant pressure boundary (RCPB) be designed, fabricated, erected, and tested to ensure an extremely low probability of abnormal leakage, rapidly propagating failure, and gross rupture.

Review Guidance

- The NRC staff reviewed the Section using NUREG-0800, Sections 5.4.2.1, 10.4.6, and Branch Technical Position 5-1.
- Electric Power Research Institute, “Pressurized Water Reactor Secondary Water Chemistry Guidelines,” Revision 7, dated February 2009.
- Nuclear Energy Institute, NEI 97-06, “Steam Generator Program Guidelines,” Revision 3, dated January 2011.

Staff's Review of DCA, Sections 10.3.5, 10.4.6, and 10.4.11

- The CPS, FWTS, and associated subsystems are not safety-related, and do not perform a nuclear safety function.
- The CPS is designed to clean and treat feedwater in order to remove corrosion products and ionic impurities.
- The CPS provides condensate cleanup capability and maintains condensate quality through filtration and ion exchange.
- The CPS is designed to control secondary water chemistry parameters to values consistent with the EPRI Secondary Water Chemistry Guidelines.
- The FWTS is designed to maintain secondary water chemistry parameters to values consistent with the EPRI Secondary Water Chemistry Guidelines in conjunction with the condensate polishing system by providing chemical addition and feedwater sampling.

Staff's Review of DCA, Sections 10.3.5, 10.4.6, and 10.4.11

- **COL Item 10.3-1:** A COL applicant that references the NuScale Power Plant design certification will provide a site-specific chemistry control program based on the latest revision of the EPRI Pressurized Water Reactor Secondary Water Chemistry Guidelines and Nuclear Energy Institute (NEI) 97-06 at the time of the COL application.
- **COL Item 10.4-1:** A COL applicant that references the NuScale Power Plant design certification will determine the size and number of new and spent resin tanks in the condensate polishing system.
- **COL Item 10.4-3:** A COL applicant that references the NuScale Power Plant design certification will provide a secondary water chemistry analysis. This analysis will show that the size, materials, and capacity of the feedwater treatment system equipment and components satisfies the water quality requirements of the secondary water chemistry program described in Section 10.3.5, and that it is compatible with the chemicals used.

Staff's Review of DCA, Sections 10.3.5, 10.4.6, and 10.4.11

- **Confirmatory Item 10.4.11-1:** Include information related to updated references and use of corrosion resistant material in the FWTS.
- There are no open or confirmatory items for Sections 10.3.5 or 10.4.6.
- The staff's review determined the CPS, secondary water chemistry, and the FWTS (pending resolution of Confirmatory Item 10.4.11-1) meet the applicable regulatory requirements.

Abbreviations

ABS	Auxiliary Boiler System
ACRS	Advisory Committee on Reactor Safeguards
ASME	American Society of Mechanical Engineers
CFR	Code of Federal Regulations
CFWS	Condensate and Feedwater System
CNV	Containment Vessel
COL	Combined License
DC	Design Certification
DCA	Design Certification Application
EPRI	Electric Power Research Institute
FAC	Flow Accelerated Corrosion
FSAR	Final Safety Analysis Report
GDC	General Design Criteria
GL	Generic Letter
ITAAC	Inspections, Tests, Analyses, and Acceptance Criteria
MSS	Main Steam System
NRC	Nuclear Regulatory Commission
NRO	NRC Office of New Reactors
SER	Safety Evaluation Report
SSC	Structures, Systems, and Components
TGS	Turbine Generator System

March 11, 2019 Docket No. 52-048

U.S. Nuclear Regulatory Commission
ATTN: Document Control Desk
One White Flint North
11555 Rockville Pike
Rockville, MD 20852-2738

SUBJECT: NuScale Power, LLC Submittal of Presentation Materials Entitled "ACRS Presentation Chapter 11 – Radioactive Waste Management," PM-0219-64543, Revision 1

The purpose of this submittal is to provide presentation materials for use during the upcoming Advisory Committee on Reactor Safeguards (ACRS) NuScale Subcommittee meeting on March 21, 2019. The materials support NuScale's presentation of Chapter 11, "Radioactive Waste Management," of the NuScale Design Certification Application.

Enclosure 1 is the presentation entitled "ACRS Presentation Chapter 11 – Radioactive Waste Management," PM-0219-64543, Revision 1.

This letter makes no regulatory commitments and no revisions to any existing regulatory commitments.

If you have any questions, please contact Carrie Fosaaen at 541-452-7126 or at cfosaaen@nuscalepower.com.

Sincerely,

Zackary W. Rad
Director, Regulatory Affairs
NuScale Power, LLC

Distribution: Robert Taylor, NRC, OWFN-7H4
Michael Snodderly, NRC, TWFN-2E26
Gregory Cranston, NRC, OWFN-8H12
Samuel Lee, NRC, OWFN-8H12
Getachew Tesfaye, NRC, OWFN-8H12

Enclosure 1: "ACRS Presentation Chapter 11 – Radioactive Waste Management," PM-0219-64543, Revision 1

Enclosure 1:

"ACRS Presentation Chapter 11 – Radioactive Waste Management," PM-0219-64543, Revision 1

ACRS Presentation Chapter 11 – Radioactive Waste Management

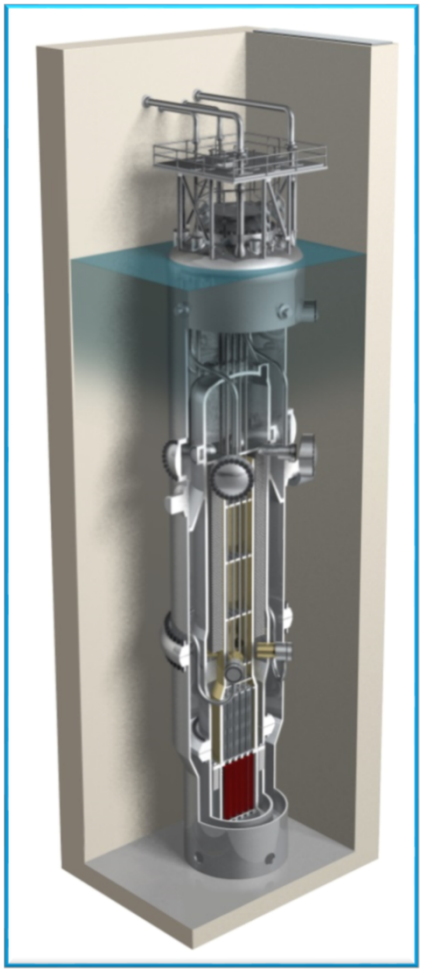

March 21st, 2019

PM-0219-64543
Revision: 1

Template #: 0000-21727-F01 R4

Chapter 11 Radioactive Waste Management

- NuScale personnel:
  - Carrie Fosaaen – Licensing Project Manager
  - Jim Osborn – Licensing Specialist
  - Mark Shaver – Radiological Engineering Supervisor
  - Jon Bristol – Health Physicist
  - Mark Royal – I&C Engineer

Chapter 11 Acronyms

- ANSI – American National Standards Institute
- CES – Containment evacuation system
- COL – Combined license
- CRUD – Corrosion and wear activation products
- CVCS – Chemical and volume control system
- DSRS – Design specific review standard
- GAC – Granulated activated charcoal
- GALE – Gaseous and liquid effluents
- GRWS – Gaseous radioactive waste system
- GWD/MTU – Gigawatt days per metric ton of uranium
- HCW – High conductivity waste
- LCW – Low conductivity waste
- LLW – Low-level waste
- LRWS – Liquid radioactive waste system
- NPM – NuScale Power Module
- ODCM – Offsite Dose Calculation Manual
- PAM – Post-accident monitor
- PCP – Process Control Program

Chapter 11 Acronyms (continued)

- PZR - Pressurizer
- R/O – Reverse osmosis
- REMP – Radiological Effluent Monitoring Program
- SCALE – Standardized Computer Analysis for Licensing Evaluation
- SCFM – Standard cubic feet per minute
- SFP – Spent fuel pool
- SRWS – Solid radioactive waste system
- TUF – Tubular ultrafiltration
- UWS – Utility water system

Chapter 11 & 12 RAIs

DCA Section	# of RAIs	# of Supplemental Responses	Total RAI Responses
11.1	2	2	4
11.2	3	0	3
11.3	2	0	2
11.4	1	0	1
11.5	3	0	3
11.6	0	0	0
Total	**11**	**2**	**13**
12.1	0	0	0
12.2	34	9	43
12.3-12.4	61	16	77
12.5	0	0	0
Total	**95**	**25**	**120**

Chapter 11 Radioactive Waste Management

- 11.1 Source Terms
- 11.2 Liquid Waste Management System
- 11.3 Gaseous Waste Management System
- 11.4 Solid Waste Management System
- 11.5 Process and Effluent Radiological Monitoring and Sampling Systems
- 11.6 I&C Design Features for Radiation Monitoring

11.1 Source Terms - Methodology

- Two source term models are developed for both primary and secondary coolants:
  - Design Basis and Normal Effluent (“Realistic”) coolant source terms have three components:
    - Water activation products
      - » Calculated from first principles
      - » The same concentration for both Normal Effluent and Design Basis
    - Corrosion activation products (CRUD)
      - » Utilized ANSI 18.1-1999, adjusted to NuScale plant parameters
      - » The same concentration for both Normal Effluent and Design Basis
      - » CRUD strictly used the regulatory guidance provided and past precedence
    - Fission products
      - » Developed using first principles physics in SCALE 6.1 for core inventory

11.1 Source Terms - Methodology

- Being unique, and first of a kind, the NuScale design cannot rely solely on empirical source term data
- The NuScale methodology will use:
  - first principle physics based calculations, where appropriate
  - operational experience from recent industry, where applicable
  - lessons learned, where available

- Water activation products will be estimated from first principles using:

$$RR_x = \sum_{g=1}^{G} \Phi_g \sigma_{x,g} N = \sum_{g=1}^{G} \Phi_g \Sigma_{x,g}$$

  - RRx: number of reactions of type “x”
  - Φ_g: neutron flux in energy group “g”
  - G: maximum energy group
  - $\sigma_{x,g}$: Microscopic cross section for reaction “x” in energy group “g”
  - N: Number density of target atoms
  - $\Sigma_{x,g} \equiv \sigma_{x,g}$ N : Macroscopic cross section for reaction x in energy group “g”

11.1 Source Terms - Methodology

- Fission products are conservatively calculated using first principle physics in SCALE 6.1 Code to 60 GWD/MTU
- Release of fission products from fuel to primary coolant based on industry operational experience through use of fuel failure fraction
- NuScale evaluation of Corrosion and Wear Activation Products (CRUD) will use current large PWR operating data (ANSI/ANS 18.1-1999).
- ANSI/ANS 18.1-1999
  - There are no first principle physics models for CRUD generation, buildup, transport, plate-out, or solubility.
- To help ensure the source terms are conservative, NuScale has incorporated lessons learned by:
  - Using EPRIs primary water chemistry and steam generator guidelines to ensure source term is conservative.
  - Design of materials used cobalt reduction philosophy

11.1 Source Terms – Failed Fuel Fraction

- Fission products
  - Normal Effluent ("Realistic") source term
    - 0.0066% (~0.6 - 0.7 rods per reactor) failure rate is assumed
    - Supported by industry experience from large PWRs, which shows much improvement since the 1970s
      - » 90-95% of US LWRs are zero-defect since 2010
    - Industry data shows that most failures are due to grid-to-rod fretting and debris
      - » NuScale uses natural circulation, which mitigates these mechanisms
      - » Technical Report TR-1116-52065, "Effluent Release (GALE Replacement) Methodology and Results", Rev. 1
  - Design Basis source term;
    - 0.066% (~6-7 rods per reactor) failure rate is assumed
      - » 10x normal effluent source term
      - » Also, supported by Tech Spec 3.4.8 value based on this fuel failure rate

11.1 Source Terms – Secondary Coolant

- Secondary coolant source term
  - Primary-to-secondary tube leaks scaled from NUREG-0017
    - Design Basis = 75 lb/day/NPM = 900 lb/day for 12 units
    - Realistic = 3.5 lb/day/NPM = 42 lb/ day for 12 units
  - Direct neutron activation of secondary was determined to be negligible due to low neutron flux at the steam generators
  - Conservatively small secondary coolant mass assumed, which tends to increase the calculated concentration
- There are no COL Items associated with Section 11.1.

GALE Replacement Methodology

- Details provided in TR-1116-52065, “Effluent Release (GALE Replacement) Methodology and Results,” Rev. 1
- GALE (NUREG-0017) was developed using empirical data from the existing (large) PWR fleet
- NuScale design is outside the range of applicability for several parameters (thermal power, coolant mass, other flows)
- Certain significant pathways in GALE were not modeled – e.g., Reactor Pool evaporation.
- Replacement method explicitly calculates radionuclide transport through NuScale plant systems using applicable guidance from NUREG-0017

11.2 Liquid Waste Management

- Objective: Collect, store, and process radioactive liquid waste
- Subsystems:
  - Low Conductivity Waste
  - High Conductivity Waste
  - Chemical Waste
  - Detergent Waste
  - Clean-in-Place
  - Drum Dryer
- System Classification:
  - Non-safety related
  - LRWS Degasifier is RW-IIa, LCW collection tank is RW-IIb, other components are RW-IIc (RG 1.143)
- Location:
  - Reactor Building (Degasifer only) and Radioactive Waste Building

11.2 Liquid Waste Management

- Design Features:
  - Uses R/O and TUF technologies for performance improvement
  - Waste streams segregated to minimize waste generation
  - Four waste collection tanks with approximately 60,000 gallons capacity
  - Four sample tanks with approximately 60,000 gallons capacity
  - Tanks in separate, steel-lined cubicles
  - Integrated clean-in-place system
  - Liquid discharge can be recycled to the reactor pool, primary coolant, returned to waste collection tank for reprocessing, or discharged offsite
- Processing rate 25 gpm
  - Can process a full (80%) collection tank in about 8.5 hours
- Effluent
  - Meets 10 CFR 20, Appendix B, Table 2
  - Meets 10 CFR 50, Appendix I
  - Continuous radiation monitoring

11.2 Liquid Waste Management

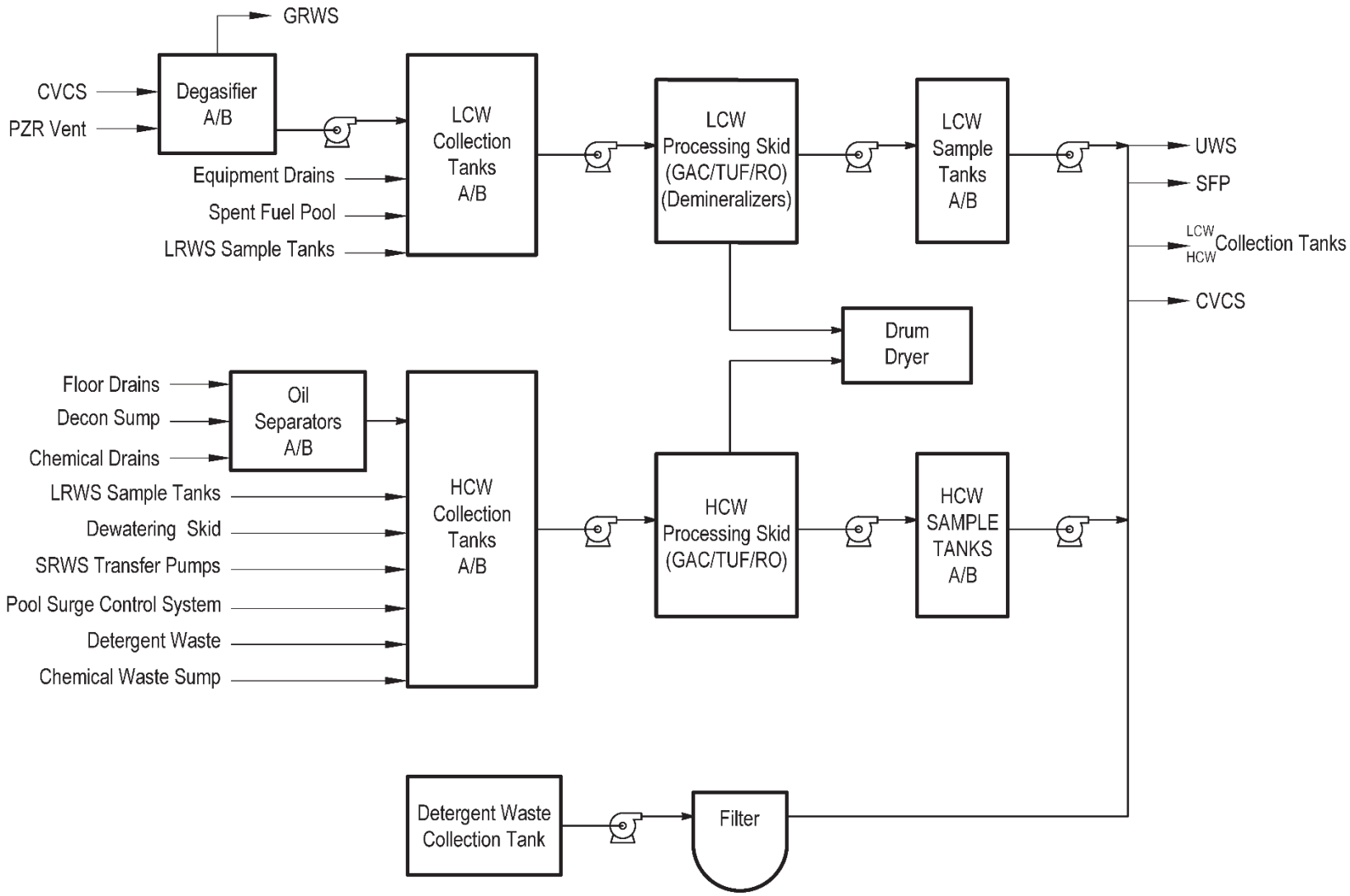

11.2 Liquid Waste Management

- Section 11.2 COL Items

COL Item #	Description
11.2-1	A COL applicant that references the NuScale Power Plant design certification will ensure mobile equipment used and connected to plant systems is in accordance with ANSI/ANS-40.37, Regulatory Guide (RG) 1.143, 10 CFR 20.1406, NRC IE Bulletin 80-10 and 10 CFR 50.34a.
11.2-2	A COL applicant that references the NuScale Power Plant design certification will calculate doses to members of the public using the site-specific parameters, compare those liquid effluent doses to the numerical design objectives of 10 CFR 50, Appendix I, and comply with the requirements of 10 CFR 20.1302 and 40 CFR 190.
11.2-3	Not used
11.2-4	A COL applicant that references the NuScale Power Plant design certification will perform a site specific evaluation using the site-specific dilution flow.
11.2-5	A COL applicant that references the NuScale Power Plant design certification will perform a cost benefit analysis as required by 10 CFR 50.34a and 10 CFR 50, Appendix I, to demonstrate conformance with regulatory requirements. This cost-benefit analysis is to be performed using the guidance of Regulatory Guide 1.110.

11.3 Gaseous Waste Management

- Objective: Collect, store, and process radioactive gaseous waste
- Subsystems:
  - None – single system design
- System Classification:
  - Non-safety related
  - GRWS guard bed and decay beds are RW-IIa, other components are RW-IIc (RG 1.143)
- Location:
  - Radioactive Waste Building

11.3 Gaseous Waste Management

- Design Features:
  - Uses charcoal decay beds to allow for noble gas decay
  - Prevent degradation of decay beds by using moisture separators and guard bed
  - Dual monitors for oxygen and hydrogen concentration to prevent flammable mixtures
  - Includes nitrogen deluge for fire suppression capabilities
  - High radiation condition will initiate effluent isolation
  - Low operating pressure (~2 psig), low flow design
- Processing rate ~1.5 scfm
  - Mostly nitrogen, to keep Hydrogen <1%
- Effluent
  - Meets 10 CFR 20, Appendix B, Table 2
  - Meets 10 CFR 50, Appendix I
  - Continuous radiation monitoring

11.3 Gaseous Waste Management

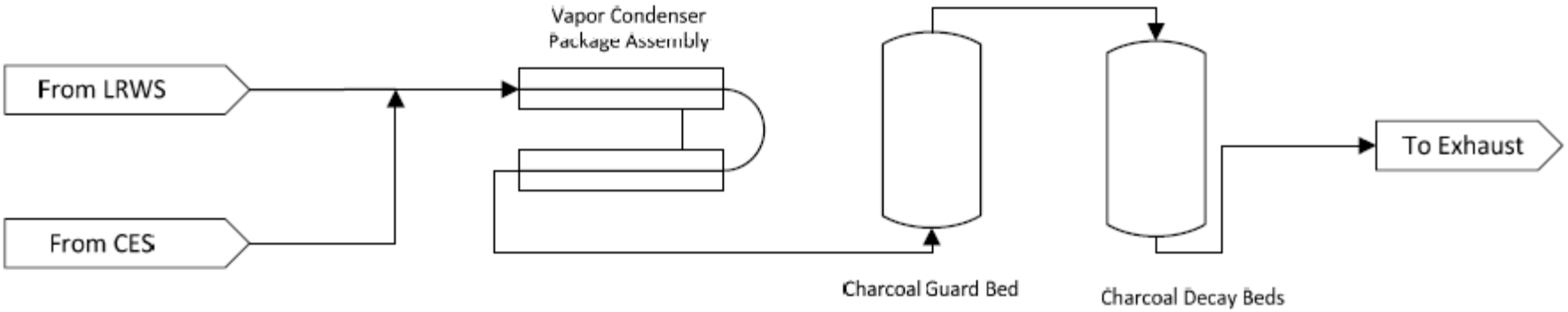

11.3 Gaseous Waste Management

- Section 11.3 COL Items

COL Item #	Description
11.3-1	A COL applicant that references the NuScale Power Plant design certification will perform a site specific cost-benefit analysis.
11.3-2	A COL applicant that references the NuScale Power Plant design certification will calculate doses to members of the public using the site-specific parameters, compare those gaseous effluent doses to the numerical design objectives of 10 CFR 50, Appendix I, and comply with the requirements of 10 CFR 20.1302 and 40 CFR 190.
11.3-3	A COL applicant that references the NuScale Power Plant design certification will perform an analysis in accordance with Branch Technical Position 11-5 using the site-specific parameters.

11.4 Solid Waste Management

- Objective: Collect, store, process, and package radioactive solid waste
- Subsystems:
  - Dry solids
    - DAW
    - HVAC filters
  - Wet solids
    - Spent resins
    - Cartridge filters
    - Spent charcoal
- System Classification:
  - Non-safety related
  - SRST is RW-IIa, PST is RW-IIb, other components are RW-IIc (RG 1.143)
- Location:
  - Radioactive Waste Building

11.4 Solid Waste Management

- Design Features:
  - Two spent resin storage tanks (16,000 gallons each)
  - Two phase separator tanks (5,000 gallons each)
  - Tanks in separate, steel-lined cubicles
- Storage Capacity:
  - Class B/C: 4 years
  - Class A: 4 years

11.4 Solid Waste Management

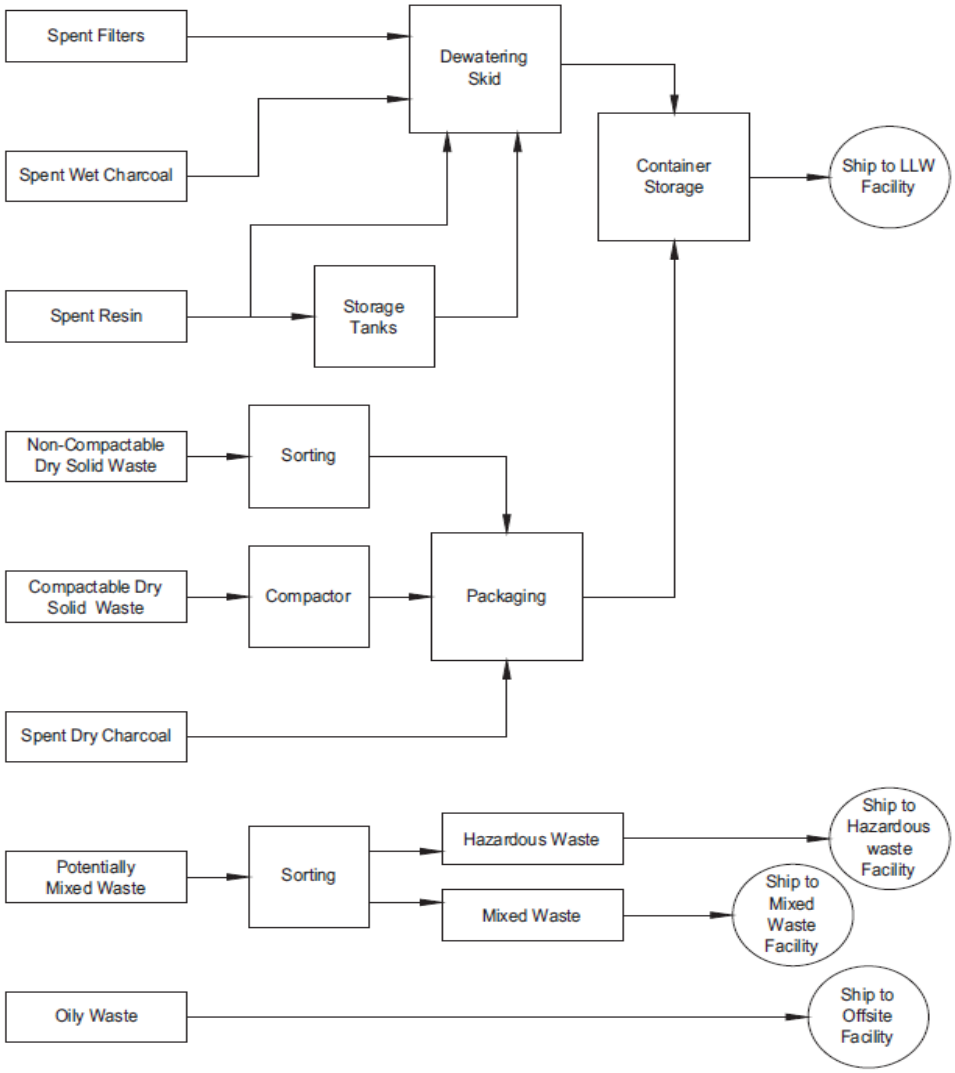

11.4 Solid Waste Management

- Section 11.4 COL Items

COL Item #	Description
11.4-1	A COL applicant that references the NuScale Power Plant design certification will describe mobile equipment used and connected to plant systems in accordance with ANSI/ANS 40.37, Regulatory Guide 1.143, 10 CFR 20.1406, NRC IE Bulletin 80-10, and 10 CFR 50.34a.
11.4-2	A COL applicant that references the NuScale Power Plant design certification will develop a site-specific process control program following the guidance of Nuclear Energy Institute (NEI) 07-10A (Reference 11.4-3).

11.5 Process & Effluent Radiological Monitoring Instrumentation & Sampling

- Objective: Measure and record radioactivity levels of selected liquid and gaseous process streams and effluents
- Function:
  - Monitor liquid and gaseous process streams and effluent paths for radioactivity
  - Indicate potential malfunctions of radioactive systems and generate alarms and controls
- Classification: Non-Safety
- Design Features:
  - High radiation condition initiates isolation of the liquid and gaseous radioactive waste effluents
  - Main steam line monitors will monitor for Ar-41, since N-16 is decayed away
  - There is a single liquid waste discharge line
  - The plant vent stack releases most of the gaseous waste
  - Turbine Building releases include turbine gland sealing steam and condenser air removal

11.5 Process & Effluent Radiological Monitoring Instrumentation & Sampling

- Gaseous Monitors
  - Auxiliary boiler system
  - Annex Building ventilation system
  - Condenser air removal system - *effluent* (PAM variable)
  - Containment evacuation system
  - Containment flood and drain separator tank
  - Normal control room ventilation system
  - Main control room supply air duct
  - Gaseous radioactive waste system decay bed and system discharges
  - Main steam lines
  - Pool surge control system storage tank vent - *effluent*
  - Reactor Building ventilation stack exhaust - *effluent* (PAM variable)
  - Radioactive Waste Building ventilation system
  - Turbine gland sealing steam exhaust - *effluent*
- All monitors are non-safety related, but are augmented quality

11.5 Process & Effluent Radiological Monitoring Instrumentation & Sampling

- Liquid Monitors
  - Aux boiler system return flow to module heating system
  - Balance of plant drain system
  - Chemical and volume control system RCS sample line
  - Containment evacuation system sample vessel discharge line
  - Condensate polisher resin regeneration skid
  - Demineralized water system headers
  - Liquid radioactive waste discharge line – *effluent*
  - Reactor component cooling water system
  - Radioactive waste drain system
  - Site cooling water
  - Utility water system outfall – *effluent*
- All monitors are non-safety related, but are augmented quality

11.5 Process & Effluent Radiological Monitoring Instrumentation & Sampling

- Section 11.5 COL Items

COL Item #	Description
11.5-1	A COL applicant that references the NuScale Power Plant design certification will describe site specific process and effluent monitoring and sampling system components and address the guidance provided in ANSI N13.1-2011, ANSI N42.18-2004 and Regulatory Guides 1.21, 1.33 and 4.15.
11.5-2	A COL applicant that references the NuScale Power design certification will develop an offsite dose calculation manual (ODCM) that contains a description of the methodology and parameters used for calculation of offsite doses for gaseous and liquid effluents, using the guidance of Nuclear Energy Institute (NEI) 07-09A (Reference 11.5-8).
11.5-3	A COL applicant that references the NuScale Power design certification will develop a radiological environmental monitoring program (REMP), consistent with the guidance in NUREG-1301 and NUREG-0133, that considers local land use census data for the identification of potential radiation pathways radioactive materials present in liquid and gaseous effluents, and direct external radiation from systems, structures, and components.

11.6 I&C Design Features for Radiation Monitoring

- New Section added to the NuScale DSRS
- Information is already contained in other Sections
- Monitors for gaseous and liquid process and effluent streams are described in Section 11.5
- Sampling system information is described in Section 9.3.2
- Fixed area and airborne radiation monitors are described in Chapter 12
- Post-accident monitoring (PAM) variables from radiation monitors are described in Chapter 7
- There are no COL Items associated with Section 11.6

Portland Office
6650 SW Redwood Lane,
Suite 210
Portland, OR 97224
971.371.1592

Corvallis Office
1100 NE Circle Blvd., Suite 200
Corvallis, OR 97330
541.360.0500

Rockville Office
11333 Woodglen Ave., Suite 205
Rockville, MD 20852
301.770.0472

Charlotte Office
2815 Coliseum Centre Drive,
Suite 230
Charlotte, NC 28217
980.349.4804

Richland Office
1933 Jadwin Ave., Suite 130
Richland, WA 99354
541.360.0500

Arlington Office
2300 Clarendon Blvd., Suite 1110
Arlington, VA 22201

London Office
1st Floor Portland House
Bressenden Place
London SW1E 5BH
United Kingdom
+44 (0) 2079 321700

http://www.nuscalepower.com
Twitter: @NuScale_Power

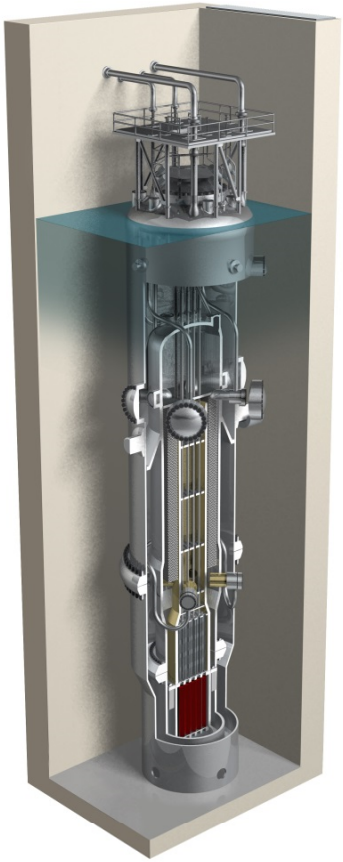

NUSCALE™
Power for all humankind

Backup Slides

11.5 Process & Effluent Radiological Monitoring Instrumentation & Sampling

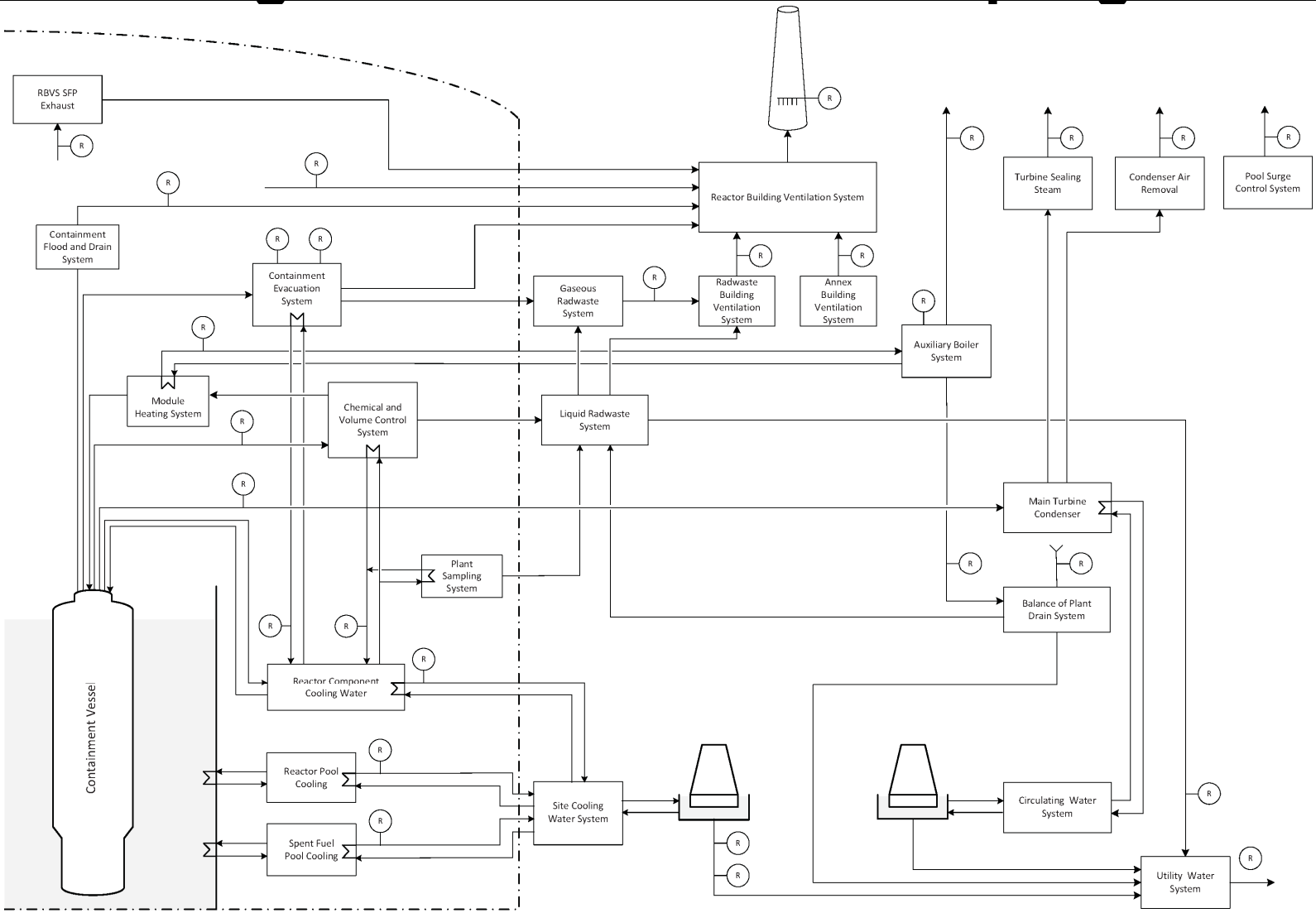

March 11, 2019 Docket No. 52-048

U.S. Nuclear Regulatory Commission
ATTN: Document Control Desk
One White Flint North
11555 Rockville Pike
Rockville, MD 20852-2738

SUBJECT: NuScale Power, LLC Submittal of Presentation Materials Entitled "ACRS Presentation Chapter 12 – Radiation Protection," PM-0219-64534, Revision 1

The purpose of this submittal is to provide presentation materials for use during the upcoming Advisory Committee on Reactor Safeguards (ACRS) NuScale Subcommittee meeting on March 21, 2019. The materials support NuScale's presentation of Chapter 12, "Radiation Protection," of the NuScale Design Certification Application.

Enclosure 1 is the presentation entitled "ACRS Presentation Chapter 12 – Radiation Protection," PM-0219-64534, Revision 1. The first slide was revised to reflect the new meeting date. There are no other changes in the presentation from when it was sent to the ACRS on February 15, 2019.

This letter makes no regulatory commitments and no revisions to any existing regulatory commitments.

If you have any questions, please contact Carrie Fosaaen at 541-452-7126 or at cfosaaen@nuscalepower.com.

Sincerely,

Zackary W. Rad
Director, Regulatory Affairs
NuScale Power, LLC

Distribution: Robert Taylor, NRC, OWFN-7H4
Michael Snodderly, NRC, TWFN-2E26
Gregory Cranston, NRC, OWFN-8H12
Samuel Lee, NRC, OWFN-8H12
Getachew Tesfaye, NRC, OWFN-8H12

Enclosure 1: "ACRS Presentation Chapter 12 – Radiation Protection," PM-0219-64534, Revision 1

Enclosure 1:

"ACRS Presentation Chapter 12 – Radiation Protection," PM-0219-64534, Revision 1

ACRS Presentation Chapter 12 – Radiation Protection

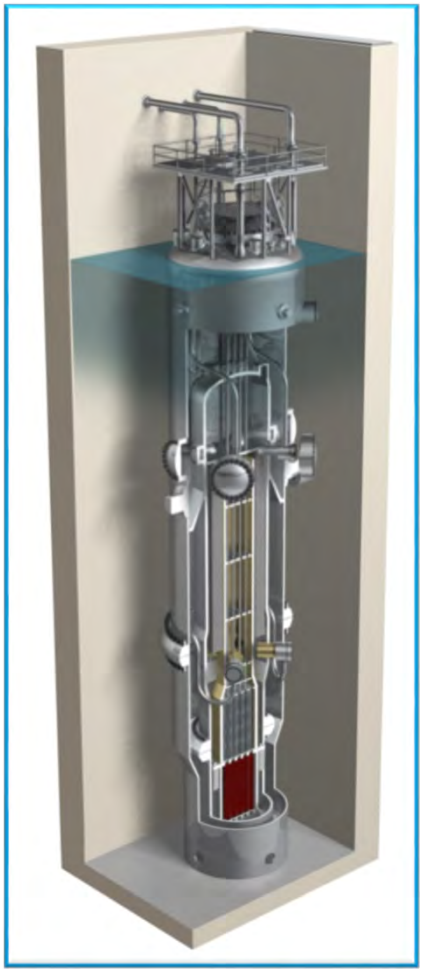

March 21st, 2019

Chapter 12 Radiation Protection Overview

- NuScale personnel:
  - Carrie Fosaaen – Licensing Project Manager
  - Jim Osborn – Licensing Specialist
  - Mark Shaver – Radiological Engineering Supervisor
  - Jon Bristol – Health Physicist
  - Mark Royal – I&C Engineer

Acronyms

- ALARA – As Low as Reasonably Achievable
- BWR – Boiling Water Reactor
- CM – Contamination Minimization
- CNV – Containment Vessel
- COL – Combined Operating License
- HDPE – High Density Polyethylene
- HVAC – Heating, Ventilation, Air Conditioning
- NPM – NuScale Power Module
- PWR – Pressurized Water Reactor
- REM – Roentgen Equivalent Man (unit of dose)
- RG – Regulatory Guide
- RPV – Reactor Pressure Vessel

Chapter 12 Radiation Protection

- 12.1 Ensuring that Occupational Radiation Exposures are ALARA
- 12.2 Radiation Sources
- 12.3 Radiation Protection Design Features
- 12.4 Dose Assessment
- 12.5 Operational Radiation Protection Program

12.1 Ensuring that Occupational Radiation Exposures are ALARA

- Policy Considerations
  - Design philosophy incorporates radiation reducing features
  - Experienced engineers/operators
  - Current design guidance from industry (EPRI, URD, RG's, etc.)
  - Material selection based on service environment and minimize cobalt
- Design Considerations
  - Followed guidance of RG 8.8, RG 4.21
  - Material selection
  - Water chemistry control
  - Facility layout
  - Equipment design
  - HVAC design
- Operational Considerations
  - ALARA Program – COL Item

12.2 Radiation Sources

- Contained Sources
  - Isotopic source terms based on design basis source term from Chapter 11
  - Radioisotopes include fission products, water activation products and corrosion products
  - Reactor pool is a significant body of tritiated water
    - Pool water tritium concentration builds up to an equilibrium (assumes liquid radwaste discharge to pool)

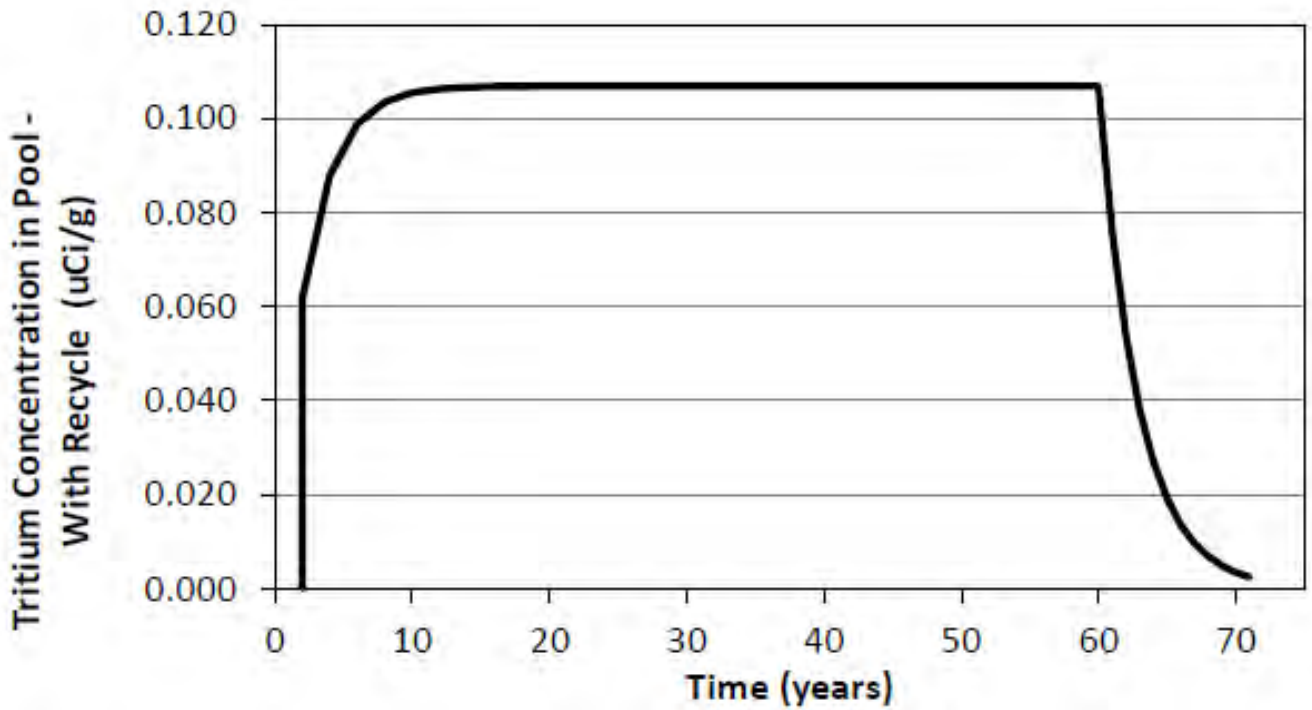

12.2 Radiation Sources

- Airborne Sources
  - Above reactor pool due to evaporation
  - Rooms with occupancy and potential for primary coolant leaks
  - Accounts for HVAC operation, designed for potential sources
- The core is also a large source of gammas and neutrons
- Energy spectra source terms generated using SCALE 6.1
- Shielding calculations are performed using MCNP6
- Accident Source terms are developed per Accident Source Term Methodology Topical Report (TR-0915-17565), currently under evaluation
- COL Item
  - Identify additional contained sources >100 mCi

12.2 Radiation Sources

Typical PWR Design *not representative of NuScale design

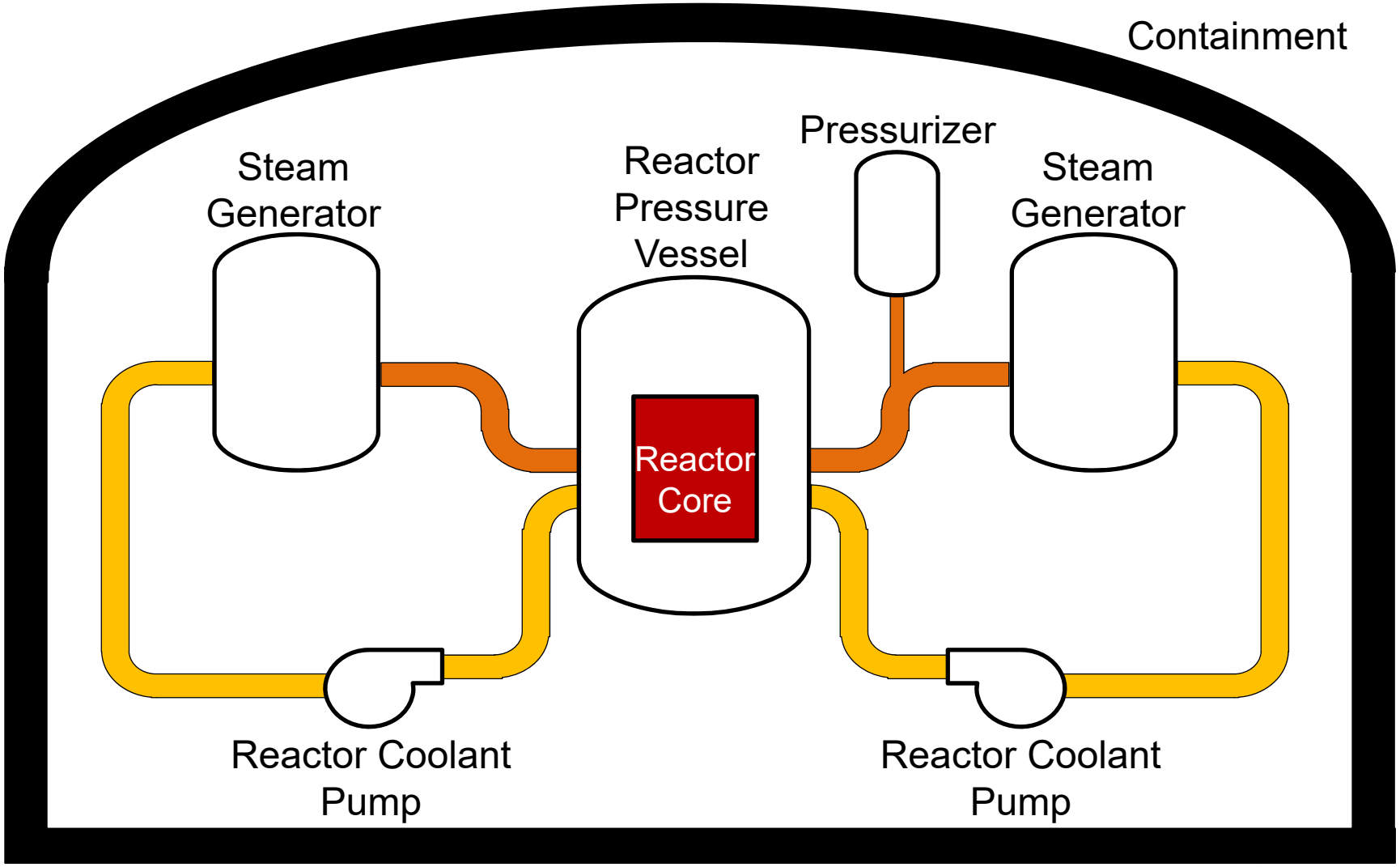

12.2 Radiation Sources

Graphic of the NPM

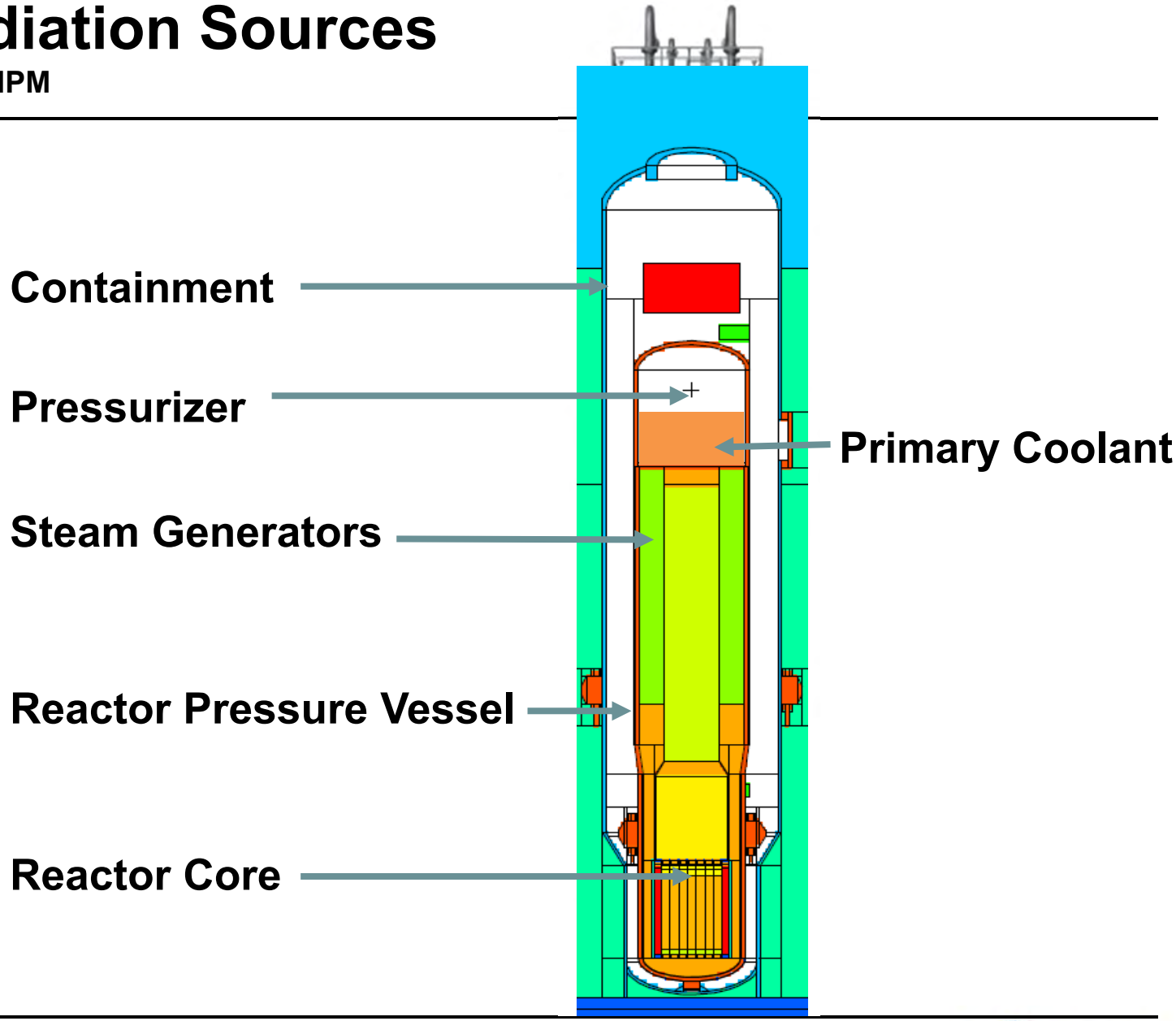

12.2 Radiation Sources

- Because of the close proximity of things to the core, activation was also investigated and accounted for:
  - Activation of components are calculated and incorporated
  - Activation of the secondary water in the steam generator was determined to be negligible
  - Activation of the pool water outside of the module was determined to be negligible

12.3 Radiation Protection Design Features

- Design features
  - Plant layout – use of shield walls, labyrinths, steel lined cubicles, pipe chases, valve galleries
  - Equipment arrangement – separated, sloped lines
  - System design – clean-in-place, minimize embedded piping, segregated
  - Radiation shielding – materials utilized include concrete, HDPE, steel, borated water (reactor pool)
    - Shielding design based on Industry proven conservative sources providing attenuation margin
  - Building ventilation – once through design, flows from areas of lower to higher contamination
  - Radiation monitors – strategically located to provide indication of plant radiological conditions
  - RG 4.21 features to minimize contamination
  - COL Items to develop administrative controls
- Refueling, decoupling the module, and core belt-line in-service-inspections remote under water

12.3 Radiation Protection Design Features

- Bioshield
  - Horizontal part is reinforced concrete; vertical part is steel-lined, borated HDPE panels arranged to allow air flow, but prevents radiation streaming

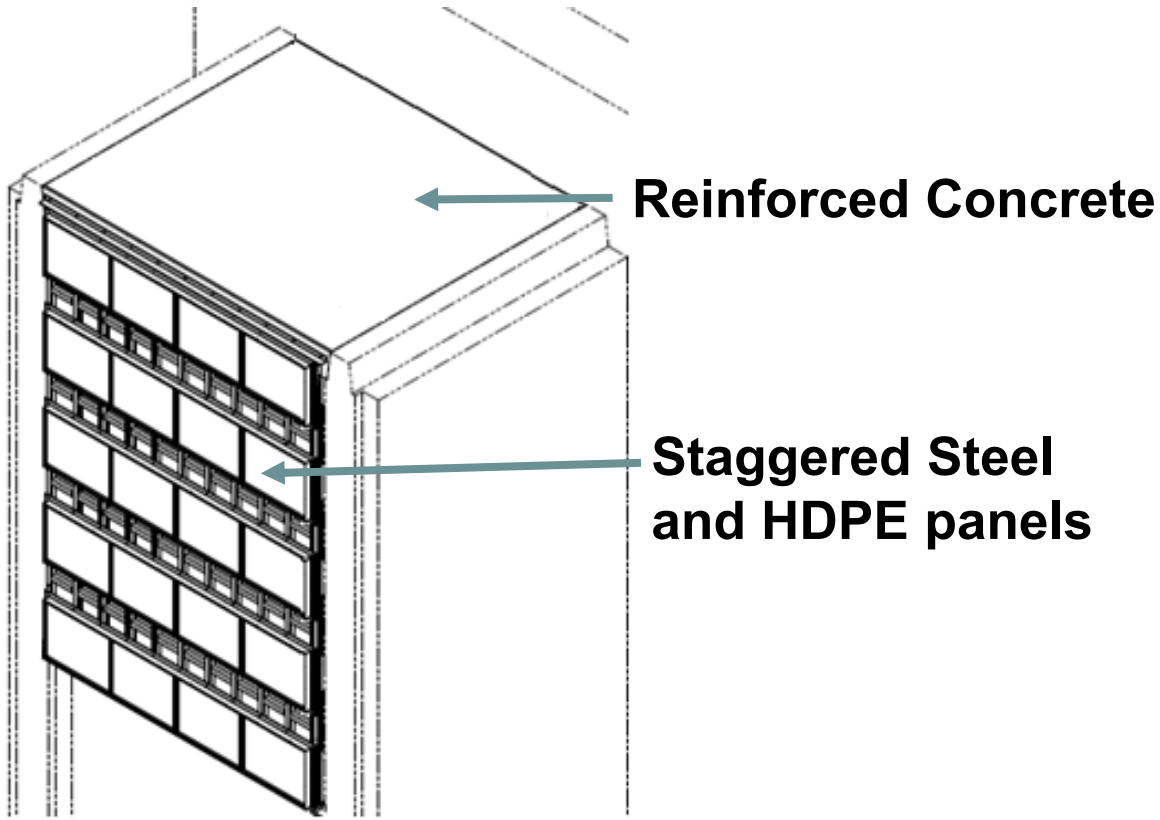

12.4 Dose Assessment

- Dose estimates are intended to be realistic and are informed by:
  - operating experience
  - staffing and operations plans
  - shielding analyses.

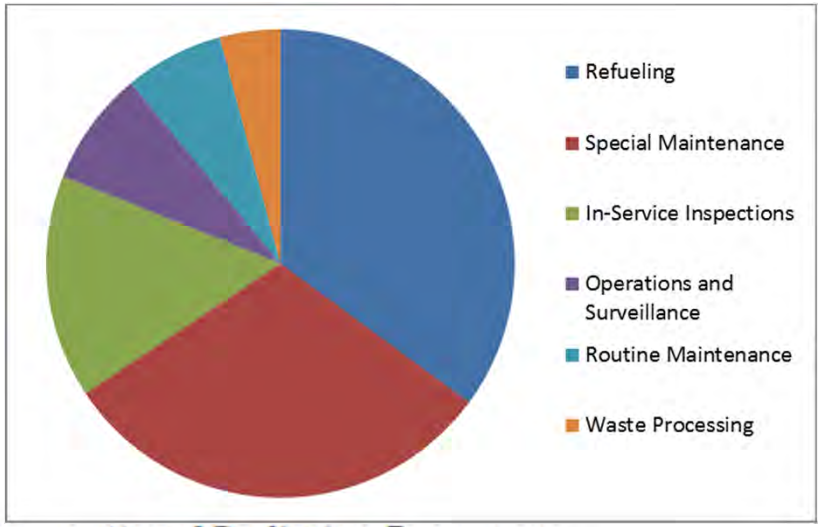

Table 12.4-1: Estimated Total Annual Occupational Radiation Exposures

Activity Category	Percent of Total	Estimated Annual Dose (man-rem)
Reactor operations & surveillance	8%	2.6
Routine maintenance & inspections	7%	2.2
Inservice inspection	15%	5.0
Special maintenance	30%	10
Waste processing	4%	1.4
Refueling	35%	11.5
Total	**100%**	**33**

Note: Estimates assume a plant with 12 NPMs on a two year refueling cycle.

12.4 Dose Assessment

- More proportional expected dose (~80%) from work around module
- Disconnecting and Reconnecting the module in the operating bay is a new evolution
  - However, it is similar to those of a conventional PWR prior to RPV head lift in which personnel incur dose. The difference is that the entire module is moved as opposed to just the RPV head.
- Maintenance doses are in different proportions
  - The SG and pressurizer are shielded, but next to each other
- ISI Geometry is different
  - RPV and CNV provide shielding to workers
- All Automated and Digital Systems
  - More proportional expected dose from Calibration and Maintenance as compared to Operations
- Unlike current generation facilities, a NuScale plant will not require significant outside resources for refueling/maintenance outages.

12.4 Dose Assessment

- Comparison of NuScale Estimated Dose to Industry Average (NUREG-0713, Vol 38, 2016)

	PWR	BWR	NuScale*
Operating Dose Yearly Average	42 man-rem	111 man-rem	33 man-rem
Dose per Individual Yearly Average	0.08 rem	0.11 rem	0.1 rem
Dose per Individual Yearly Average Adjusted for transient workers	0.09 rem	0.12 rem	0.1 rem
Dose Based on Power Production	0.05 man-rem/MW-yr	0.12 man-rem/MW-yr	0.06 man-rem/MW-yr

*Assumes all 12 modules operating at full power, 95% capacity factor, two year cycles

- Conclusion: The NuScale estimates are comparable to the current industry, demonstrating ALARA.

12.5 Operational Radiation Protection Program

- COL Item: Operational programs for ensuring occupational doses remain within regulations

Chapter 12 COL Items

COL Item #	Description
12.1-1	A COL applicant that references the NuScale Power Plant design certification will describe the operational program to maintain exposures to ionizing radiation as far below the dose limits as practical, as low as reasonably achievable (ALARA).
12.2-1	A COL applicant that references the NuScale Power Plant design certification will describe additional site-specific contained radiation sources that exceed 100 millicuries (including sources for instrumentation and radiography) not identified in Section 12.2.1.
12.3-1	A COL applicant that references the NuScale Power Plant design certification will develop the administrative controls regarding access to high radiation areas per the guidance of Regulatory Guide 8.38.
12.3-2	A COL applicant that references the NuScale Power Plant design certification will develop the administrative controls regarding access to very high radiation areas per the guidance of Regulatory Guide 8.38.
12.3-3	A COL applicant that references the NuScale Power Plant design certification will specify personnel exposure monitoring hardware, specify contamination identification and removal hardware, and establish administrative controls and procedures to control access into and exiting the radiologically controlled area.
12.3-4	A COL applicant that references the NuScale Power Plant design certification will develop the processes and programs necessary for the implementation of 10 CFR 20.1501 related to conducting radiological surveys, maintaining proper records, calibration of equipment, and personnel dosimetry.

Chapter 12 COL Items continued

COL Item #	Description
12.3-5	A COL applicant that references the NuScale Power Plant design certification will describe design criteria for locating additional area radiation monitors.
12.3-6	A COL applicant that references the NuScale Power Plant design certification will develop the processes and programs necessary for the use of portable airborne monitoring instrumentation, including accurately determining the airborne iodine concentration in areas within the facility where plant personnel may be present during an accident.
12.3-7	A COL applicant that references the NuScale Power Plant design certification will develop the processes and programs associated with Objectives 5 and 6, to work in conjunction with design features, necessary to demonstrate compliance with 10 CFR 20.1406, and the guidance of Regulatory Guide 4.21.
12.3-8	A COL applicant that references the NuScale Power Plant design certification will describe the radiation shielding design measures used to compensate for the main steam and main feedwater piping penetrations through the Reactor Building pool wall between the NuScale Power Module bays and the Reactor Building steam galleries near the 100 ft elevation (Shown on Figure 3.6-16 and Figure 3.6-17).
12.4-1	A COL applicant that references the NuScale Power Plant design certification will estimate doses to construction personnel from a co-located existing operating nuclear power plant that is not a NuScale Power Plant.
12.5-1	A COL applicant that references the NuScale Power Plant design certification will describe elements of the operational radiation protection program to ensure that occupational and public radiation exposures are as low as reasonably achievable in accordance with 10 CFR 20.1101.

Portland Office
6650 SW Redwood Lane,
Suite 210
Portland, OR 97224
971.371.1592

Corvallis Office
1100 NE Circle Blvd., Suite 200
Corvallis, OR 97330
541.360.0500

Rockville Office
11333 Woodglen Ave., Suite 205
Rockville, MD 20852
301.770.0472

Charlotte Office
2815 Coliseum Centre Drive,
Suite 230
Charlotte, NC 28217
980.349.4804

Richland Office
1933 Jadwin Ave., Suite 130
Richland, WA 99354
541.360.0500

Arlington Office
2300 Clarendon Blvd., Suite 1110
Arlington, VA 22201

London Office
1st Floor Portland House
Bressenden Place
London SW1E 5BH
United Kingdom
+44 (0) 2079 321700

http://www.nuscalepower.com
Twitter: @NuScale_Power

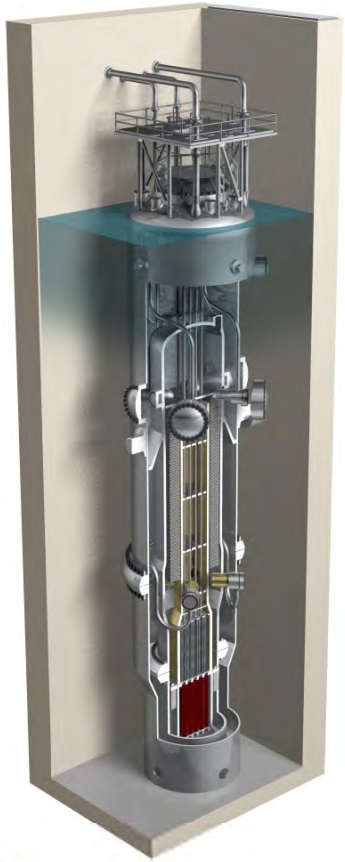

NUSCALE™
Power for all humankind

United States Nuclear Regulatory Commission

Protecting People and the Environment

Presentation to the ACRS

NuScale Design Certification Applicant Review

Safety Evaluation with Open Items: Chapter 11

RADIOACTIVE WASTE MANAGEMENT

March 21, 2019

Staff Review Team

- **Technical Staff**
  - **Zachary Gran** – DCD Sections 11.1 to 11.5 NRO/DLSE/RGRB

- **Project Managers**
  - **Getachew Tesfaye – Chapter PM**
  - **Greg Cranston – Lead PM**

Overview of DCD Review

		Number of Questions	Number of Open Items
11.1	Source Terms	2	1
11.2	Liquid Waste Management System	3	1
11.3	Gaseous Waste Management System	2	0
11.4	Solid Waste Management Systems	1	0
11.5	Process and Effluent Radiological Monitoring Instrumentation and Sampling Systems	3	0
Totals		11	2

Technical Topics of Interest:
DCD Section 11.1 – Source Terms

United States Nuclear Regulatory Commission
Protecting People and the Environment

SER Section 11.1 – with Open Items:

- Coolant source terms are based on a realistic failed fuel fraction of 0.0066% failed fuel. Coolant source terms also leveraged the corrosion product data listed in ANSI/ANS-18.1-1999.

- Staff reviewed information contained in Technical Report, TR-1116-52065, "Effluent Release (GALE Replacement) Methodology and Results."

- Staff audited NuScale's approach to the GALE code.
  - Staff reviewed information from EPRI on the fuel failure rates from 2007 to 2016, and verified NuScale had chosen the maximum fuel failure rate from this set of data.

- Result is that staff agreed with NuScale's alternative approach to calculating the realistic coolant source terms.

Technical Topics of Interest:
DCD Section 11.1 – Source Terms

United States Nuclear Regulatory Commission
Protecting People and the Environment

SER Section 11.1 – with Open Items (Cont'd):

- **Open Item 11.01-1 (RAI 9161, Question 11.01-01)**: Changes to realistic and design basis source terms. The response to this RAI resulted in the change to all listed effluent release results and component inventories. Response revised the following information:
  - Revision to all component source terms contained in chapter 11 and 12.
  - Revision to the calculated doses for compliance with 10 CFR 50 Appendix I.
  - Revised NuScale Technical Report on the Effluent Release Methodology.

Technical Topics of Interest:
DCD Section 11.2 – Liquid Waste Management System

SER Section 11.2 - with Open Items:

- Staff evaluated the LRWS design basis and features, system description, processing methods, and capacities; seismic and quality group classifications; performance characteristics; instrumentation and alarm systems; automatic termination of liquid effluent release; ALARA design features; and boundary definition.

- Staff evaluated the basis and development of liquid process waste streams, estimated inputs to LRWS, and treatment process performance (decontamination factors).

- NRC approved LADTAP II code used to calculate liquid effluent releases during normal operations using the realistic failed fuel fraction source term.

Technical Topics of Interest
DCD Section 11.2 – Liquid Waste Management System

SER Section 11.2 - with Open Items (Cont'd):

- Staff confirmed the methodology, basis, and assumptions used to comply with Effluent Concentration Limits (ECLs) in 10 CFR Part 20, Appendix B, Table 2, Column 2; public dose limits in 10 CFR Part 20; and design objectives in 10 CFR Part 50, Appendix I.

- COL Information Items:
  - Verify mobile and temporary radwaste processing equipment and interconnection to plant systems.
  - Verify offsite liquid effluent doses comply with 10 CFR Part 20; 40 CFR Part 190 under 10 CFR 20.1301(e); and 10 CFR Part 50, Appendix I.
  - Perform site specific evaluation using site specific dilution flow.
  - Perform Cost Benefit Analysis (CBA) – Liquid Waste Management System.

Technical Topics of Interest
DCD Section 11.2 – Liquid Waste Management System

SER Section 11.2 - with Open Items (Cont'd):

- **BTP 11-6 Issue Open Item 11.02-1**: NRC staff is in discussions with NuScale to determine a path forward for addressing the calculation that would be performed for assessing the dose consequences from the catastrophic failure of an outdoor tank containing radioactive material.

Technical Topics of Interest
DCD Section 11.3 – Gaseous Waste Management System

SER Section 11.3 - with No Open Items:

- Staff confirmed GRWS design basis and features, system description, processing methods, and capacities; seismic and quality group classifications; performance characteristics; instrumentation and alarm systems; automatic isolation of gaseous waste process flow and effluent release; hydrogen and oxygen monitoring; ALARA design features; and release points.

- Staff confirmed the basis and development of gaseous process waste streams, estimated inputs to GRWS, treatment process performance (removal efficiencies and holdup time), and building ventilation systems.

- NRC approved GASPAR II code used to calculate gaseous effluent releases during normal operations using the realistic failed fuel fraction source term.

Technical Topics of Interest
DCD Section 11.3 – Gaseous Waste Management System

SER Section 11.3 - with No Open Items (Cont'd):

- Staff confirmed the methodology, basis, and assumptions used to comply with ECLs in 10 CFR Part 20, Appendix B, Table 2, Column 1; public dose limits in: 10 CFR Part 20; and design objectives in 10 CFR Part 50, Appendix I.
- Staff confirmed the methodology, basis, and assumptions to assess radiological impacts due to postulated failure of charcoal bed failure.
- Staff confirmed there are no mobile or temporary equipment or connections to permanently installed equipment considered in GRWS design.

Technical Topics of Interest
DCD Section 11.3 – Gaseous Waste Management System

United States Nuclear Regulatory Commission
Protecting People and the Environment

SER Section 11.3 - with No Open Items (Cont'd):

- COL Information Items:
  - Verify offsite gaseous effluent doses comply with 10 CFR Part 20; 40 CFR Part 190 under 10 CFR 20.1301(e); and 10 CFR Part 50, Appendix I.
  - Perform analysis using site specific parameters for an assumed failure of the GRWS to comply with Guidance in BTP 11-5.
  - Perform Cost Benefit Analysis (CBA) – Gaseous Waste Management System.

Technical Topics of Interest
DCD Section 11.4 – Solid Waste Management System

SER Section 11.4 – with No Open Items (Cont'd):

- Staff assessed the SRWS design basis and features, system description, processing methods, and capacities; seismic and quality group classifications; performance characteristics; instrumentation and alarm systems; annual estimated waste generation rates; ALARA design features; capability to move drums and HICs; provision for mobile or temporary equipment; and boundary definition.

- Staff confirmed that there are no direct liquid and gaseous effluent releases from SRWS (associated releases and compliance with ECLs and dose limits are addressed in DCD Sections 11.2 and 11.3).

- Staff confirmed the basis for design storage capacity of Class A, B, and C radioactive wastes.

Technical Topics of Interest
DCD Section 11.4 – Solid Waste Management System

SER Section 11.4 – with No Open Items (Cont'd):

- COL Information Items:
  - Verify mobile and temporary radwaste processing equipment and interconnection to plant systems.
  - Develop PCP following the guidance of NEI 07-10A.

Technical Topics of Interest

DCD Section 11.5 – Process and Effluent Radiation Monitoring Instrumentation and Sampling Systems

SER Section 11.5 - with No Open Items:

- Staff reviewed the Process and Effluent Radiation Monitoring Instrumentation and Sampling System (PERMISS) design basis and features, system descriptions, types, number, and locations of PERMISS monitors and samplers; seismic and quality group classifications; operational ranges, sensitivities, and alarms; system calibrations and provisions for built-in check sources; provisions for automatic isolation and termination features; and ALARA design features.

- Staff reviewed and verified that the plant process systems and effluent flow paths are monitored by radiation monitoring and sampling equipment.

Technical Topics of Interest

DCD Section 11.5 – Process and Effluent Radiation Monitoring Instrumentation and Sampling Systems

SER Section 11.5 - with No Open Items (Cont'd):

- COL Information Items:
  - A COL Applicant that references the NuScale Power Plant design certification will describe site specific process and effluent monitoring and sampling system.
  - Develop ODCM following the guidance of NEI 07-09A.
  - Develop REMP following the guidance of NEI 07-09A.

Conclusions
DCD Chapter 11

- Resolution of 2 open items expected in Phase 4 of DCD review:
  - Staff will finalize the review of changes to realistic and design basis source terms.
  - Staff will evaluate the open issue related to the calculation performed to assess the dose consequences from the failure of an outdoor tank containing radioactive material.

Conclusions
DCD Chapter 11

United States Nuclear Regulatory Commission
Protecting People and the Environment

Questions?

ACRONYMS

ALARA – as low as is reasonably achievable
ANSI – American National Standards Institute
AOOs – anticipated operational occurrences
ASTM – American Society for Testing and Materials
BTP- Branch Technical Position
CBA – cost-benefit analysis
CDI – conceptual design information
CFR – code of federal regulations
COL – combined license
DCD – design control document
ECLs – effluent concentration limits
EPA – Environmental Protection Agency
GL – Generic Letter
GDC – General Design Criterion
GSI – Generic Safety Issue
GRWS – gaseous radioactive waste system
HEPA – high-efficiency particulate air
ITAAC – inspection, test, analysis, and acceptance criteria
LLRW – low-level radioactive waste
LRWS – liquid radioactive waste system
NEI – Nuclear Energy Institute
NUREG – US Nuclear Regulatory Commission Regulation

ACRONYMS

ODCM – offsite dose calculation manual
PERMISS – process effluent radiation monitoring instrumentation and sampling systems
P&IDs – piping and instrumentation diagrams
PCP – process control program
RAI – request for additional information
RCS – reactor coolant system
REMP – radiological environmental monitoring program
RG – regulatory guide
R/O – reverse osmosis
RTNSS – regulatory treatment of non safety SE – Safety Evaluation
SER – safety evaluation report
SRP – standard review plan
SRST – spent resin storage tank
SRWS – solid radioactive waste system
TMI – Three Mile Island
TS – technical specifications
USI – unresolved safety issue

U.S.NRC

United States Nuclear Regulatory Commission

Protecting People and the Environment

Presentation to the ACRS Subcommittee

NuScale Power

Safety Evaluation With Open Items: Chapter 12

RADIATION PROTECTION

March 21, 2019

Staff Review Team

- **Technical Staff**
  - Ron LaVera – Lead DCD Chapter 12 Reviewer
  - Ed Stutzcage – DCD Chapter 12 Reviewer
  - Zach Gran – DCD Chapter 12 Reviewer

- **Project Managers**
  - Getachew Tesfaye – Chapter PM
  - Greg Cranston – Lead PM

Technical Topics - Overview Chapter 12, Radiation Protection

United States Nuclear Regulatory Commission
Protecting People and the Environment

		Number of Questions	Number of Open Items
12.1	Ensuring that Occupational Radiation Exposures are As Low As is Reasonably Achievable (ALARA)	0	0
12.2	Radiation Sources	33	7
12.3 &4	Radiation Protection Design Features	62	6
12.5	Operational Radiation Protection Program	0	0
Totals		95	13

Technical Topics

Section 12.1 - Ensuring that Occupational Exposures are ALARA

United States Nuclear Regulatory Commission
Protecting People and the Environment

Technical Topics Reviewed:

- ALARA considerations applied during initial design.
- Equipment design considerations are as low as reasonably achievable (ALARA).
- Facility layout considerations maintain exposures ALARA

Findings:

- The staff determined that the general NuScale design features and commitments are acceptable. The COL applicant will address the program to maintain exposures to radiation ALARA.

U.S.NRC
United States Nuclear Regulatory Commission
Protecting People and the Environment

Technical Topics – Contained Sources:

- Types of contained sources
  - Reactor and Reactor Coolant System (RCS), containment vessel
  - Tanks and pools
  - Equipment concentrating activity, including the following:
    - Filters and Resin Demineralizers in plant systems
    - Liquid Radioactive Waste System components and subsystems
    - Guard and Decay Beds in Gaseous Radioactive Waste System
  - Irradiated components
- Basis for stated content
  - RCS source terms are based on an assumed 0.066% failed fuel fraction.
  - Used as the basis for plant radiation shielding and zoning (in Section 12.3-12.4).
  - Limited by Technical Specifications (TS) 3.4.8 RCS Specific Activity.

U.S.NRC
United States Nuclear Regulatory Commission
Protecting People and the Environment

Technical Topics – Airborne Activity:

- Areas potentially containing airborne activity
  - Reactor Building
  - Radwaste Building
- Basis for stated content
  - Source terms are based on:
    - An assumed 0.066% failed fuel fraction
    - Activation products (e.g., Tritium)
  - Based off evaporation from the ultimate heat sink pool and equipment leakage.
- Source terms were developed for areas expected to have higher airborne activity concentrations.

U.S.NRC
United States Nuclear Regulatory Commission
Protecting People and the Environment

Technical Topics – Accident Sources:

- The applicant has provided a white paper indicating their intent to revise the accident source term methodology topical report which has a significant impact on equipment qualification.
  - Equipment (e.g., containment electrical penetration assemblies and the containment high range radiation monitors (10 CFR 50.34(f)(2)(xvii)) will no longer be qualified per 10 CFR 50.49 to a core damage accident source term, but will instead rely on equipment survivability.
- The applicant has also provided an exemption request from 10 CFR 50.34(f)(2)(viii) to not have to demonstrate compliance with the 5 rem limit in 10 CFR 50.34(f)(2)(viii).
- The staff is currently evaluating these documents.
- The applicant has not yet provided the revised accident source term topical report.

Technical Topics

Section 12.2 – Radiation Sources

United States Nuclear Regulatory Commission
Protecting People and the Environment

Findings:

- Staff reviewed the radiation sources provided by the applicant and the methodology used to develop the sources.
- Staff disagreed with the basis or rationale provided by the applicant, but other available information allowed the NRC staff to determine that there were no regulatory concerns.
- With the exception of the remaining issues discussed on the following slides, the staff finds the list of sources and the methodology used to develop the sources to be complete and in accordance with applicable regulatory requirements (including 10 CFR 52.47(a)(5)) and SRP Section 12.2.

Technical Topics

Section 12.2 – Radiation Sources

United States Nuclear Regulatory Commission
Protecting People and the Environment

Remaining Issues:

- 8759, Q 12.02-1 - The applicant initially assumed a design basis failed fuel fraction (DBFFF) of 0.028% in developing the normal operation design basis source terms.
- The assumed DBFFF was inconsistent with the RCS specific activity provided in TS.
- The applicant modified the TS, RCS specific activity and design basis source term values to be consistent with an assumed DBFFF of 0.066%.
- This change is acceptable. However, in making these changes, the applicant also made a variety of other changes affecting the design basis source terms.
- As a result, the DBFFF RAI remains open until all related changes to source terms have been reviewed and approved.

Technical Topics

Section 12.2 – Radiation Sources

United States Nuclear Regulatory Commission
Protecting People and the Environment

Remaining Issues:

- 9607 - The applicant originally considered a post-shutdown crud burst in the design basis source terms.
- However, the contribution to resin beds from post-shutdown crud burst clean up was removed from the DCD Revision 0, because NuScale believed that ANSI/ANS 18.1-1999 source terms already included the contribution for crud burst.
- The staff's review of ANSI/ANS 18.1-1999 found no basis for this belief.
- The applicant also indicated that a crud burst is not necessary because it only results in a temporary short term change in the source terms and that access to areas affected by crud burst would be controlled by the radiation protection program.
- Because the response does not identifying the kinds and quantities of radioactive materials expected to be produced in the operation, per 10 CFR 52.47(a)(5), the staff determined that this item is still under review.

Technical Topics

Section 12.2 – Radiation Sources

United States Nuclear Regulatory Commission
Protecting People and the Environment

Remaining Issues:

- 9258 (or follow-up RAI 9657 when issued) – Information from the applicant indicates that a two inch pipe is assumed for the resin transfer lines.
- However, the applicant notes that a three inch pipe will be used for some of the resin transfer piping without specifying the locations used.
- Staff review indicates that a three inch pipe could result in significantly higher dose rates than what was analyzed by the applicant (i.e. 2 inch only).
- Staff identified that information about the shielding for the resin transfer lines was not in the application.
- As a result, staff requested that the applicant consider the use of a three inch resin transfer line at the appropriate locations or provide a COL item and associated interface item to specify that the shielding information would be provided by the COL applicant.
- Staff has also requested that the applicant provide additional information regarding the shielding and zoning for areas near the resin transfer line.

Technical Topics

Section 12.2 – Radiation Sources

U.S.NRC
United States Nuclear Regulatory Commission
Protecting People and the Environment

Remaining Issues:

- 9291 – The applicant changed RCS source term assumptions, including increasing the assumed RCS flow rate in the reactor vessel which changes the contribution of nitrogen 16 in the source term.
- The applicant has provided updated source term information associated with this and revised the calculated dose above the reactor vessel. The change resulted in the dose rate from radiation emanating from reactor coolant to the area above the reactor vessel, inside containment, to be revised from 1.1 mrem/hour to approximately 1600 mrem/hour.
- Staff determined that this is significant because this area includes the containment penetration assemblies, which are included in the equipment qualification program.
- The applicant also reduced the dose rate from neutron radiation and neutron induced gamma radiation.
- Staff is currently conducting an audit to review these changes.

Technical Topics

Section 12.2 – Radiation Sources

United States Nuclear Regulatory Commission
Protecting People and the Environment

Remaining Issues:

- 9282 – The applicant did not properly characterize the radiation fields in and around the top of the containment vessel.
- Staff evaluated and determined that the exposure to safety related equipment, radiation streaming to areas adjacent to the nuclear power module bays, and the ability of the radiation shielding described in the application to provide the assumed radiation attenuation factors could potentially be impacted by improperly characterizing these radiation fields.
- The staff is currently conducting an audit to review these changes.

Technical Topics

Section 12.2 – Radiation Sources

United States Nuclear Regulatory Commission
Protecting People and the Environment

Remaining Issues:

- 9621 – In response to staff questions, the applicant revised source term contained within the Gas Decay System Bed, and also updated the radwaste classifications for the Gaseous Radwaste Management System guard and decay beds to RW-IIa to account for potential increases in the gaseous radioactive waste system source terms during the period following degasifying the reactors for shutdown.
- Staff evaluated and determined that the applicant's response did not provide updated radiation source term, shielding, or zoning information related to degassing the RCS for reactor shutdown. The applicant indicated that updating this information was unnecessary because degasification for shutdown is a transient condition.
- Staff determined that the holdup time for Xenon in the beds is expected to be 45 days. Therefore, degasifying a unit for shutdown every 2 months could impact the source term of the beds for an extensive amount of the operating time. As a result, this remains an open item.

Technical Topics

Section 12.2 – Radiation Sources

United States Nuclear Regulatory Commission
Protecting People and the Environment

Remaining Issues:

- 9613 – The applicants design basis airborne activity source terms, used in the design of the ventilation system, are based on an ultimate heat sink pool evaporation rate assuming a pool temperature of 100 degrees Fahrenheit (ºF). However, plant TS 3.5.3 Ultimate Heat Sink (UHS) allow the pool temperature to exceed 100ºF.
- Staff analysis indicates that the concentration of airborne tritium could exceed the threshold for internal monitoring at slightly above 100ºF.
- Staff requested that the applicant revise the source term or to provide a COL item to ensure that operational programmatic elements are in place to ensure occupational exposures remain below regulatory limits if 100ºF is exceeded.
- 9270 – The applicant revised the design basis airborne activity source terms due to an error(s) discovered in the calculations.
- The staff is evaluating these changes.

Technical Topics

Section 12.2 – Radiation Sources

United States Nuclear Regulatory Commission
Protecting People and the Environment

Remaining Issues:

- As previously discussed, the applicant is planning to submit a revised accident source term methodology topical report (TR-0915-17565).
- The staff is currently evaluating a white paper associated with a proposed revision to accident source term methodology and a proposed exemption from 10 CFR 50.34(f)(2)(viii).
- As a result, the design basis accident source terms, which are used in vital area mission dose (Chapter 12), reactor siting (Chapter 15), main control room habitability (Chapter 6, 12, and 15), equipment qualification (Chapter 3) remain open items.

Technical Topics

Section 12.3-12.4 – Radiation Protection Design Features (Including Dose Assessment)

United States Nuclear Regulatory Commission
Protecting People and the Environment

Technical Topics – Facility Design Features:

- Source control
  - Minimizing Cobalt
- Component specifications
  - Improving reliability
  - Reducing maintenance and leaks
- Radiation Zones
  - Shielding for significant radiation sources (most significant sources are located within their own individual room).
  - Doses in walkways and frequently accessed areas are ALARA (below 2.5 mrem/hour).

U.S.NRC
United States Nuclear Regulatory Commission
Protecting People and the Environment

Technical Topics – Facility Design Features:

- Shielding and Zoning
  - For most areas, shielding thicknesses for areas containing significant radiation levels are provided to limit the dose to the radiation zones and ALARA, including during refueling and other anticipated operating conditions.
  - MCNP was the primary computer code used by the applicant to determine radiation levels.
  - Distance, shielding, and crud burst clean up prior to module disassembly are used to limit the dose rate to operators on refueling machine platform to 2.5 mrem/hour.
  - The applicant uses demineralizers and distance to limit the dose to members of the public from outdoor tanks.

U.S.NRC
United States Nuclear Regulatory Commission
Protecting People and the Environment

Technical Topics – Facility Design Features:

- Radiation Monitors
  - Post-Accident Radiation Monitors
    - Area radiation monitors (ARM) under the bioshield are designed to provide radiation dose information under the bioshield during accident conditions.
    - They are environmentally qualified and credited post-accident Type B and Type C variable monitors, per RG 1.97.
    - The location and capabilities of these radiation monitors are designed to meet the intent of 10 CFR 50.34(f)(2)(xvii) to monitor radiological conditions inside containment during an accident.
  - Radiation monitors are provided for meeting 10 CFR 50.68(b)(6)
  - ARMs are designed to be in conformance with ANSI/ANS HPSSC-6.8.1 (1981)

U.S.NRC
United States Nuclear Regulatory Commission
Protecting People and the Environment

Technical Topics – Facility Design Features:

- Minimization of Contamination - 10 CFR 20.1406(b)
  - Design Objectives
    - Minimize the potential for leaks and spills to prevent the spread of contamination.
    - Provide sufficient leak detection capability to support timely leak identification from appropriate SSC.
    - Reduce the likelihood of cross-contamination, the need for decontamination and waste generation.
    - Facilitate eventual decommissioning through design practices.
  - Programmatic Considerations
    - Operational and programmatic considerations.
    - Site Radiological Environmental Monitoring
      - COL Item 12.3-7.

United States Nuclear Regulatory Commission
Protecting People and the Environment

Technical Topics – Dose Assessment:

- NuScale total annual dose estimate of 33 person-rem
  - The most significant contribution is from refueling and maintenance activities.
- NUREG-0737 post accident mission doses
  - The only design basis post-accident missions applicable to the NuScale design are post-accident sampling. NuScale has proposed to take an exemption from post-accident sampling requirements. The review of the post-accident sampling mission dose is on going.

Technical Topics

Section 12.3-12.4 – Radiation Protection Design Features (Including Dose Assessment)

United States Nuclear Regulatory Commission
Protecting People and the Environment

Findings:

- Staff reviewed the radiation protection design features provided by the applicant.
- For some design features, staff disagreed with the basis or rationale provided by the applicant, but other available information allowed the NRC staff to determine that there were no regulatory concerns.
- The staff finds the radiation protection design features to be in accordance with the applicable regulatory requirements, including ALARA requirements and requirements to minimize contamination, with the exception of the post-accident sampling mission dose and the remaining issues discussed on the following slides.

Technical Topics

Section 12.3-12.4 – Radiation Protection Design Features (Including Dose Assessment)

United States Nuclear Regulatory Commission
Protecting People and the Environment

Remaining Issues:

- 9284 - The applicant did not provide sufficient information on the smoothness of the finish for the dry dock area. The applicant indicates that the surface will be smooth but does not provide specific information specifying the smoothness rating. The Electric Power Research Institute (EPRI) Utility Requirements Document indicates that the finish on such an area should be a No. 4 finish.
- Review of this item is ongoing.

Technical Topics

Section 12.3-12.4 – Radiation Protection Design Features (Including Dose Assessment)

United States Nuclear Regulatory Commission
Protecting People and the Environment

Remaining Issues:

- 9294 and 9295 (Or follow up RAI 9656 if issued) – The applicant specifies that the radiation shielding design details and materials of the penetrations for the pool shield wall penetrations outside of the containment vessels and other areas with penetrations have not been finalized and will be the responsibility of the COL applicant. However, there is no interface item identified for the COL applicant to address this issue.
- The staff reviewed and determined that based on information provided in the responses to these questions, the applicant needed to provide the applicable design interface information in accordance with the requirements of 10 CFR 52.47(a)(24), 10 CFR 52.47(a)(25) and 10 CFR 52.47(a)(26).

Technical Topics

Section 12.3-12.4 – Radiation Protection Design Features (Including Dose Assessment)

United States Nuclear Regulatory Commission
Protecting People and the Environment

Remaining Issues:

- 9298 – The applicant has modified the design of the bioshield several times including the removal and reincorporation of borated polyethylene as a shielding material. The current design includes borated polyethylene plates as a shield material on the faceplates of the bioshield. The applicant has indicated that several RAIs will be revised as a result of the current design change.
- The staff continues to review this issue. Information to be provided by the applicant includes the following:
  - Density of the polyethylene.
  - Shielding information added to ITAAC.
  - Information related to inspection, testing, and potential replacement of the borated polyethylene.
  - Information on temperature limitations on the borated polyethylene.

Technical Topics

Section 12.3-12.4 – Radiation Protection Design Features (Including Dose Assessment)

United States Nuclear Regulatory Commission
Protecting People and the Environment

Remaining Issues:

- 9275 – The applicant did not adequately describe the leakage collection and detection system for the UHS, and connected pools of water.
- The issue is a cross disciplinary issue.
  - A cross disciplinary team conducted an audit of the pool leakage detection system, and other aspects of the design to ascertain the ability of the overall design to minimize leakage and monitor for any leakage that may occur, to ensure that structural integrity of Safety Related SSCs would be able to function for the life of the facility.
  - The Chapter 12 review focused on the leakage detection and monitor capability
  - Other related aspects will be addressed in the safety evaluations for the affected sections of the review.
  - The staff is unable to determine at this time that the leakage detection and monitoring is sufficient for the purpose of ensuring the function of the Safety Related SSCs.
- The issue remains under review by the staff.

United States Nuclear Regulatory Commission
Protecting People and the Environment

Technical Topics – Operational Radiation Protection Program:

- No Open Items
- Required to be provided by COL applicant

Technical Topics

Section 12.5 - Operational Radiation Protection Program

United States Nuclear Regulatory Commission
Protecting People and the Environment

Findings:

- The staff has determined that it is acceptable for the applicant to defer to COL applicants to provide information in this area.

Conclusion

U.S.NRC
United States Nuclear Regulatory Commission
Protecting People and the Environment

Questions?

ACRONYMS

10 CFR – Title 10 of the Code of Federal Regulations

ALARA – as low as is reasonably achievable

ANSI/ANS – American National Standards Institute/American Nuclear Society
COL – combined license
DBFFF - design basis failed fuel fraction
DCD – Design Certification Document
FSAR – Final Safety Analysis Report
MCNP – Monte Carlo N-Particle Transport Code
NUREG-0737 – “Clarification of TMI Action Plan Requirements”
RAI – request for additional information
RCS – Reactor Coolant System
RG – Regulatory Guide
SER – safety evaluation report
SRP – Standard Review Plan
TS – Technical Specifications
UHS – Ultimate Heat Sink