DUKE ENERGY

Facility Code :	HNP
Applicable Facilities :	HNP
Document Number :	8-G-0517 S04
Document Revision Number :	013
Document EC Number :	
Change Reason :	EC0000284333
Document Title :	HVAC-RAB CONTROL ROOM AIR FLOW DIAGRAM

Brennan, Jerry W.	PREPARER	4/23/2018
Pappur, Manjunath V.	APPROVER	4/26/2018

Notes :

CAR-2168
G-517S04

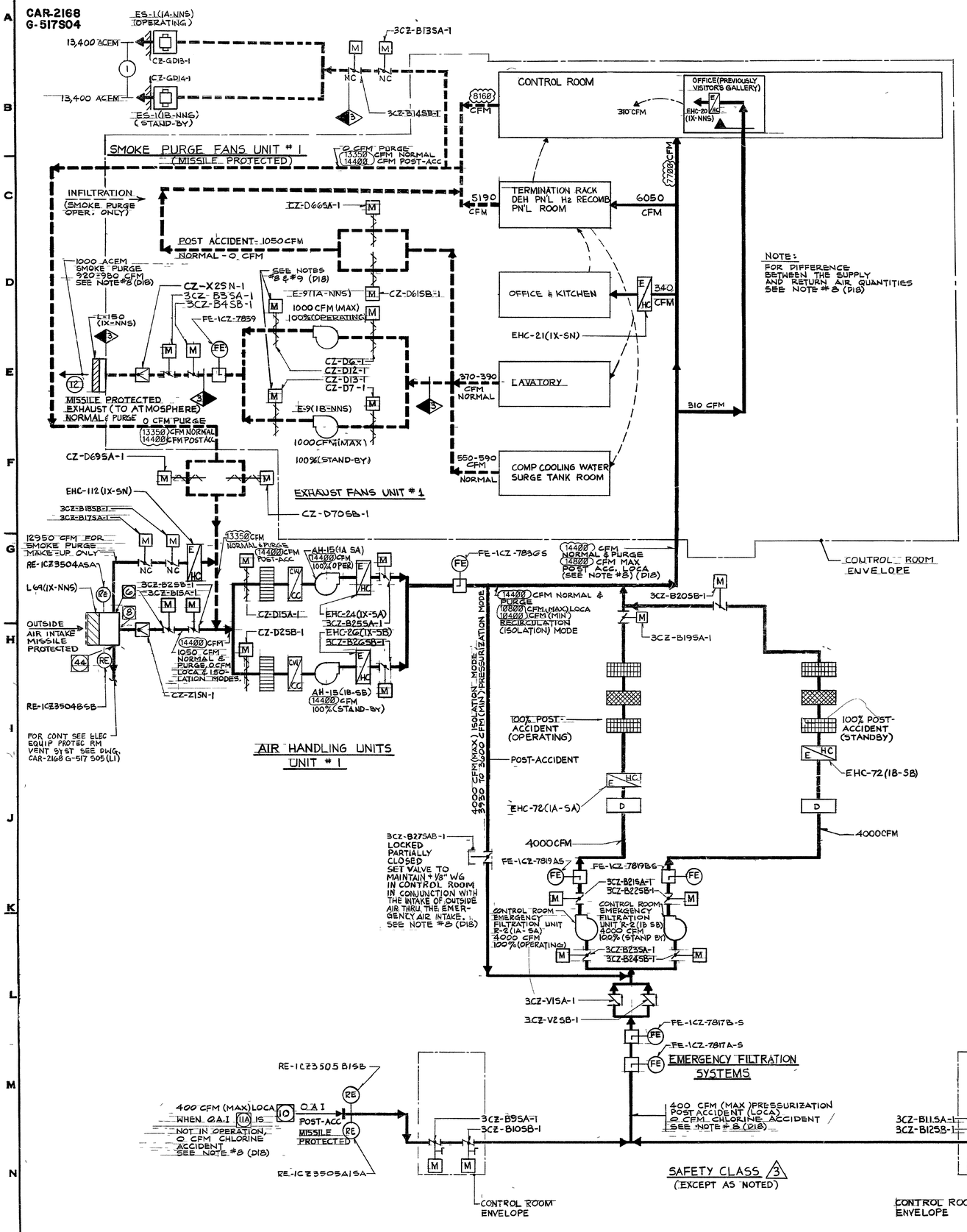

NOTE:
FOR DIFFERENCE BETWEEN THE SUPPLY AND RETURN AIR QUANTITIES SEE NOTE #8 (D18)

NOTES

1) AIR FLOW DIAGRAMS ARE SCHEMATIC AND ARE NOT INTENDED TO REPRODUCE THE ACTUAL SEQUENCE OF DUCT CONNECTIONS AS THEY OCCUR ON THE PHYSICAL DRAWINGS.

2) FOR LOCATION OF BALANCING DAMPERS REFER TO THE PHYSICAL DRAWINGS

3) FLOW ELEMENTS TO BE INSTALLED WHERE SPACE PERMITS OR IN COMMON DUCT.

4) AIR FLOW QUANTITIES SHOWN SHALL BE USED FOR SYSTEM BALANCING AT THE APPLICABLE MODE OF OPERATION

5.

6) FOR SYMBOLS & ABBREVIATIONS SEE DWG. CAR-2168-G-528 S02.

7) FOR PLANT AIRBORNE EFFLUENT RELEASE POINTS DESIGNATED THUS (12) ETC AND FOR THE CONTROL RM. OUTSIDE AIR INTAKES DESIGNATED THUS (7) ETC SEE FSAR FIG 9.4.0-2

8) CONTROL ROOM ENVELOPE CALCULATED LEAKAGE @ 1/8" W.G. IS WITHIN THE RANGE OF 70-130 CFM THE ACTUAL LEAKAGE TO BE DETERMINED BY CONTROL ROOM ENVELOPE LEAK TESTING CAPACITY OF SYSTEM ACCOMMODATES 400 CFM.

9) FAN RATED CAPACITY 1000 CFM, HOWEVER, FAN FLOW SHALL BE AUTOMATICALLY THROTTLED AS REQUIRED BY THE MODULATING DAMPER CZ-D12-1 & CZ-D13-1 ACTED UPON BY THE CONTROL ROOM PRESSURE DIFFERENTIAL CONTROLLER TO MAINTAIN THE 1/8" W.G. PRESSURE DIFFERENTIAL IN THE NORMAL MODE OF OPERATION.

REFERENCE DRAWINGS

HVAC-2AB PLAN UNIT#1 EL 305	2168	G 507S01
HVAC-2AB CONT RM UNIT#1 EL 305		G 525S02
HVAC-2AB PLAN UNIT#1 EL 286		G-806

REV	DESCRIPTION	APPROVAL
13	INCORPORATED: EC 284333 (B5,C4,F2,G3,G4,G6,G7,H2,I4)	ELECTRONICALLY SIGNED

DUKE ENERGY

QUALITY LEVEL: NUCLEAR SAFETY RELATED IN PART

PLANT: HARRIS PROJECT - UNIT 1 SCALE: N/A

TITLE: HVAC-REACTOR AUXILIARY BUILDING CONTROL ROOM AIR FLOW DIAGRAM

PLANT DWG NO.: 2168-G-0517 S04

DUKE ENERGY

Facility Code :	HNP
Applicable Facilities :	HNP
Document Number :	8-G-0533 S04
Document Revision Number :	012
Document EC Number :	
Change Reason :	EC0000270291
Document Title :	HVAC-AIR FLOW DIAG WPB SH 3 UNITS 1-2

Mehta, Ameeta	Preparer	7/19/2017
Scattergood, Tom	Approver	7/19/2017

Notes :

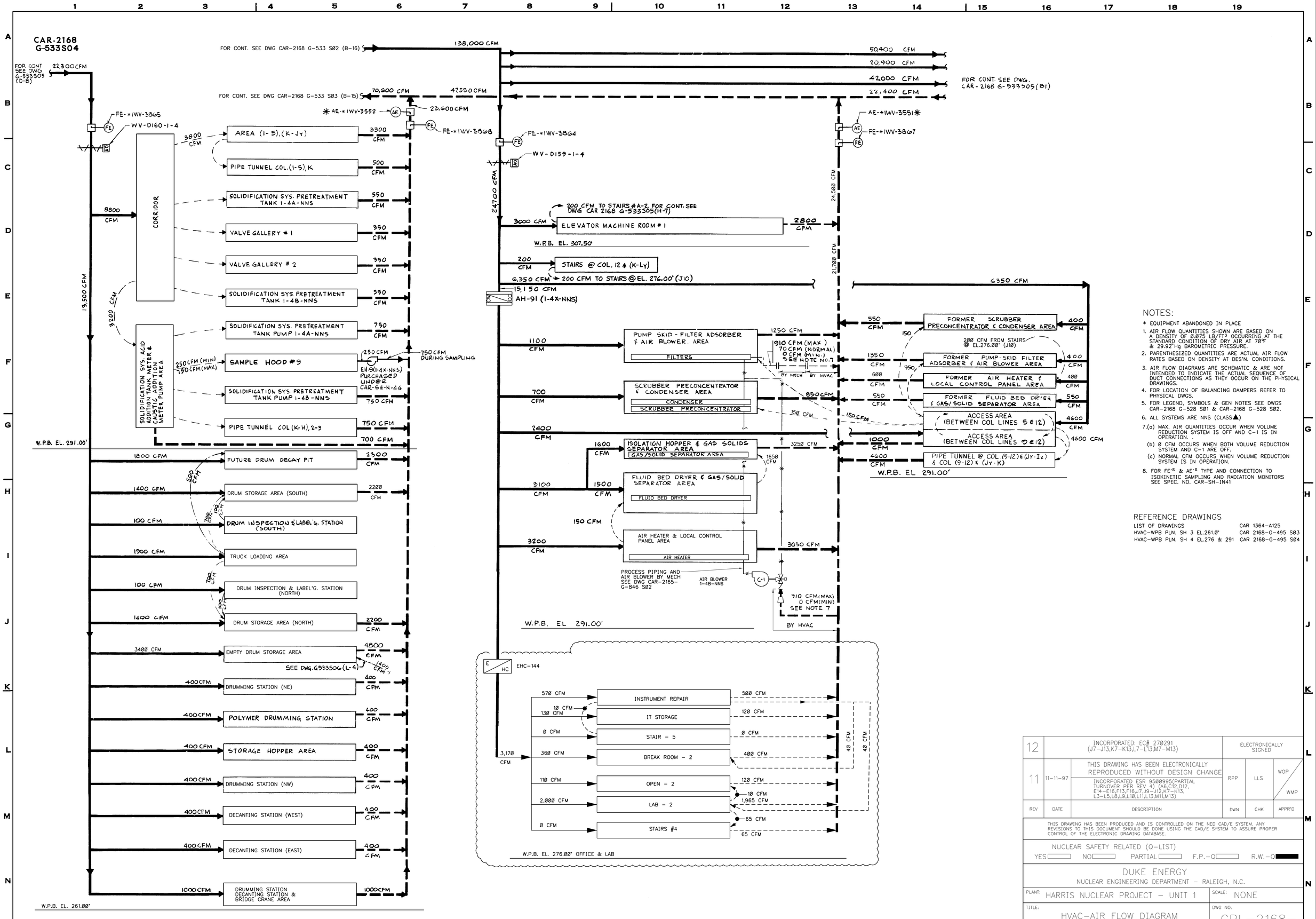

NOTES:

* EQUIPMENT ABANDONED IN PLACE

1. AIR FLOW QUANTITIES SHOWN ARE BASED ON A DENSITY OF 0.075 LB/FT³ OCCURRING AT THE STANDARD CONDITION OF DRY AIR AT 70°F & 29.92" Hg BAROMETRIC PRESSURE.
2. PARENTHESIZED QUANTITIES ARE ACTUAL AIR FLOW RATES BASED ON DENSITY AT DES'N. CONDITIONS.
3. AIR FLOW DIAGRAMS ARE SCHEMATIC & ARE NOT INTENDED TO INDICATE THE ACTUAL SEQUENCE OF DUCT CONNECTIONS AS THEY OCCUR ON THE PHYSICAL DRAWINGS.
4. FOR LOCATION OF BALANCING DAMPERS REFER TO PHYSICAL DWGS.
5. FOR LEGEND, SYMBOLS & GEN NOTES SEE DWGS CAR-2168 G-528 S01 & CAR-2168 G-528 S02.
6. ALL SYSTEMS ARE NNS (CLASS ▲)
7. (a) MAX. AIR QUANTITIES OCCUR WHEN VOLUME REDUCTION SYSTEM IS OFF AND C-1 IS IN OPERATION.
   (b) 0 CFM OCCURS WHEN BOTH VOLUME REDUCTION SYSTEM AND C-1 ARE OFF.
   (c) NORMAL CFM OCCURS WHEN VOLUME REDUCTION SYSTEM IS IN OPERATION.
8. FOR FE'S & AE'S TYPE AND CONNECTION TO ISOKINETIC SAMPLING AND RADIATION MONITORS SEE SPEC. NO. CAR-SH-IN41

REFERENCE DRAWINGS

LIST OF DRAWINGS	CAR 1364-A125
HVAC-WPB PLN. SH 3 EL.261.0'	CAR 2168-G-495 S03
HVAC-WPB PLN. SH 4 EL.276 & 291	CAR 2168-G-495 S04

REV	DATE	DESCRIPTION	DWN	CHK	APPR'D
12		INCORPORATED: EC# 270291 (J7-J13,K7-K13,L7-L13,M7-M13)	ELECTRONICALLY SIGNED		
11	11-11-97	THIS DRAWING HAS BEEN ELECTRONICALLY REPRODUCED WITHOUT DESIGN CHANGE. INCORPORATED ESR 950995(PARTIAL TURNOVER PER REV 4) (A6,C12,D12, E14-E16,F13,F16,J7,J9-J12,K7-K13, L3-L5,L8,L9,L10,L11,L13,M11,M13)	RPP	LLS	WOP / WMP

THIS DRAWING HAS BEEN PRODUCED AND IS CONTROLLED ON THE NED CAD/E SYSTEM. ANY REVISIONS TO THIS DOCUMENT SHOULD BE DONE USING THE CAD/E SYSTEM TO ASSURE PROPER CONTROL OF THE ELECTRONIC DRAWING DATABASE.

NUCLEAR SAFETY RELATED (Q-LIST)

YES ☐ NO ☐ PARTIAL ☐ F.P.-Q ☐ R.W.-Q ■

DUKE ENERGY
NUCLEAR ENGINEERING DEPARTMENT - RALEIGH, N.C.

PLANT: HARRIS NUCLEAR PROJECT - UNIT 1

SCALE: NONE

TITLE: HVAC-AIR FLOW DIAGRAM WASTE PROCESSING BUILDING SHEET 3 UNITS 1 & 2

DWG NO. CPL-2168-G-533 S04

DUKE ENERGY

Facility Code :	HNP
Applicable Facilities :	HNP
Document Number :	8-G-0533 S06
Document Revision Number :	010
Document EC Number :	
Change Reason :	EC0000270291
Document Title :	HVAC-AIR FLOW DIAGRAM WASTE PROCESSING BUILDING SHEET 5 UNITS 1 & 2

Mehta, Ameeta	Preparer	7/18/2017
Scattergood, Tom	Approver	7/18/2017

Notes :

CAR-2168
G-533S06

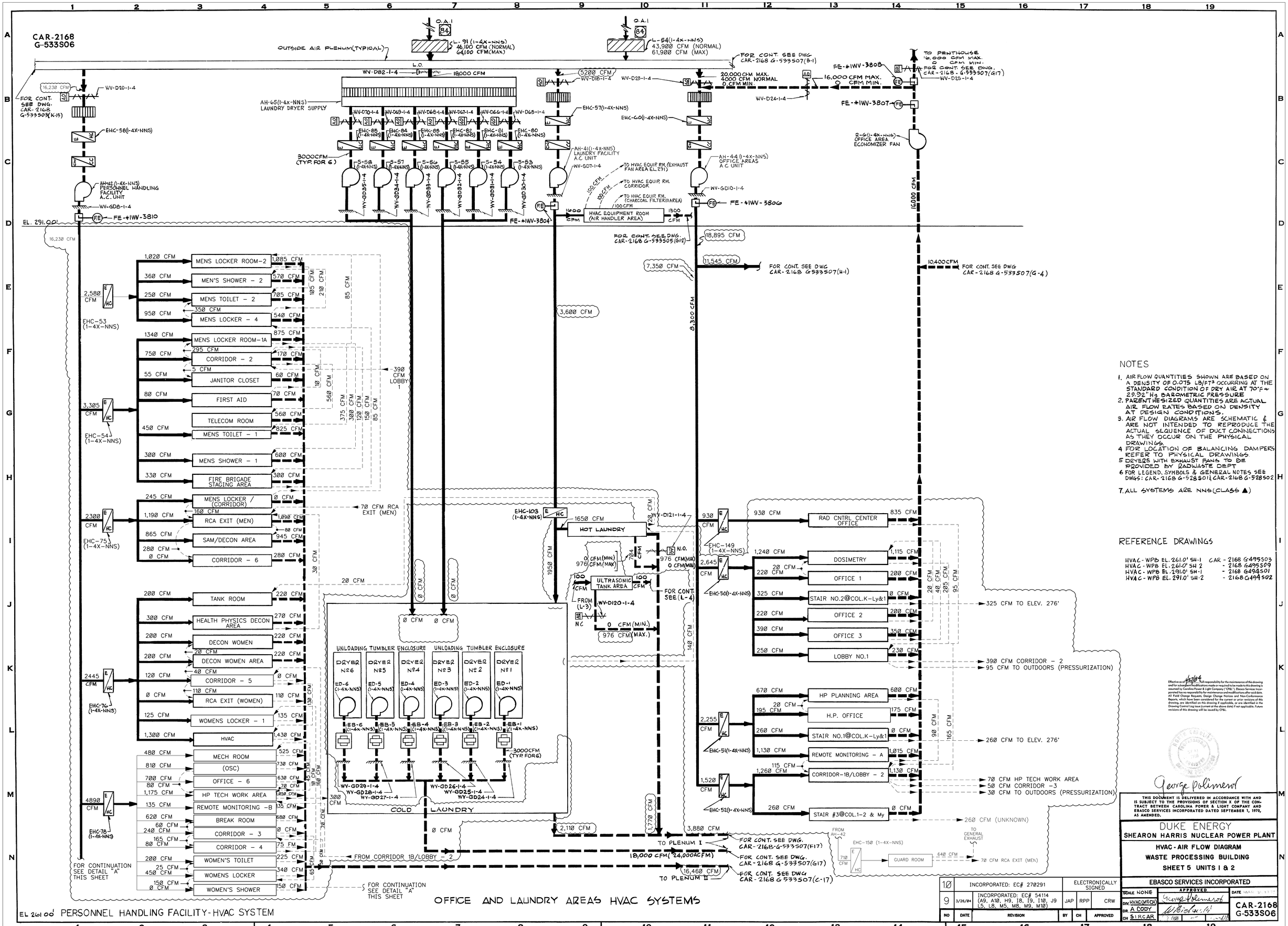

NOTES

1. AIR FLOW QUANTITIES SHOWN ARE BASED ON A DENSITY OF 0.075 LB/FT³ OCCURRING AT THE STANDARD CONDITION OF DRY AIR AT 70°F & 29.92" Hg BAROMETRIC PRESSURE
2. PARENTHESIZED QUANTITIES ARE ACTUAL AIR FLOW RATES BASED ON DENSITY AT DESIGN CONDITIONS.
3. AIR FLOW DIAGRAMS ARE SCHEMATIC & ARE NOT INTENDED TO REPRODUCE THE ACTUAL SEQUENCE OF DUCT CONNECTIONS AS THEY OCCUR ON THE PHYSICAL DRAWINGS.
4. FOR LOCATION OF BALANCING DAMPERS REFER TO PHYSICAL DRAWINGS
5. DRYERS WITH EXHAUST FANS TO BE PROVIDED BY RADWASTE DEPT
6. FOR LEGEND, SYMBOLS & GENERAL NOTES SEE DWGS: CAR-2168 G-528501 & CAR-2168 G-528502
7. ALL SYSTEMS ARE NNS (CLASS ▲)

REFERENCE DRAWINGS

HVAC - WPB EL. 261.0' SH-1	CAR - 2168 G495503
HVAC - WPB EL. 261.0' SH 2	- 2168 G495509
HVAC - WPB EL. 291.0' SH-1	- 2168 G494501
HVAC - WPB EL. 291.0' SH-2	- 2168 G494502

Effective as of 4/5/04 the responsibility for the maintenance of this drawing and for subsequent modifications made or required to be made to this drawing is assumed by Carolina Power & Light Company ("CP&L"). Ebasco Services Incorporated has no responsibility for maintenance and modifications after said date. All Field Change Requests, Design Change Notices and Non-Conformance Reports, which have been considered for the current or prior revisions of this drawing, are identified on this drawing if applicable, or are identified in the Drawing Control Log issue (current at the above date) if not applicable. Future revisions of this drawing will be issued by CP&L.

George Polimeroff

THIS DOCUMENT IS DELIVERED IN ACCORDANCE WITH AND IS SUBJECT TO THE PROVISIONS OF SECTION X OF THE CONTRACT BETWEEN CAROLINA POWER & LIGHT COMPANY AND EBASCO SERVICES INCORPORATED DATED SEPTEMBER 1, 1970, AS AMENDED.

DUKE ENERGY
SHEARON HARRIS NUCLEAR POWER PLANT
HVAC - AIR FLOW DIAGRAM
WASTE PROCESSING BUILDING
SHEET 5 UNITS 1 & 2
EBASCO SERVICES INCORPORATED

NO	DATE	REVISION	BY	CH	APPROVED
10		INCORPORATED: EC# 270291			ELECTRONICALLY SIGNED
9	3/26/84	INCORPORATED: EC# 54114 (A9, A10, H9, I8, I9, I10, J9 L5, L8, M5, M8, M9, M10)	JAP	RPP	CRW

SCALE NONE
DIV. HVAC(MECH)
DR. A. CODY
CH S.I.R.C.A.R.
APPROVED George Polimeroff
DATE
CAR-2168
G-533S06

DUKE ENERGY

Facility Code :	HNP
Applicable Facilities :	HNP
Document Number :	8-G-0533 S07
Document Revision Number :	018
Document EC Number :	
Change Reason :	EC0000270291
Document Title :	HVAC-AIR FLOW DIAGRAM WASTE PROCESSING BUILDING SHEET 6, UNITS 1 & 2

Mehta, Ameeta	Preparer	7/19/2017
Scattergood, Tom	Approver	7/19/2017

Notes :

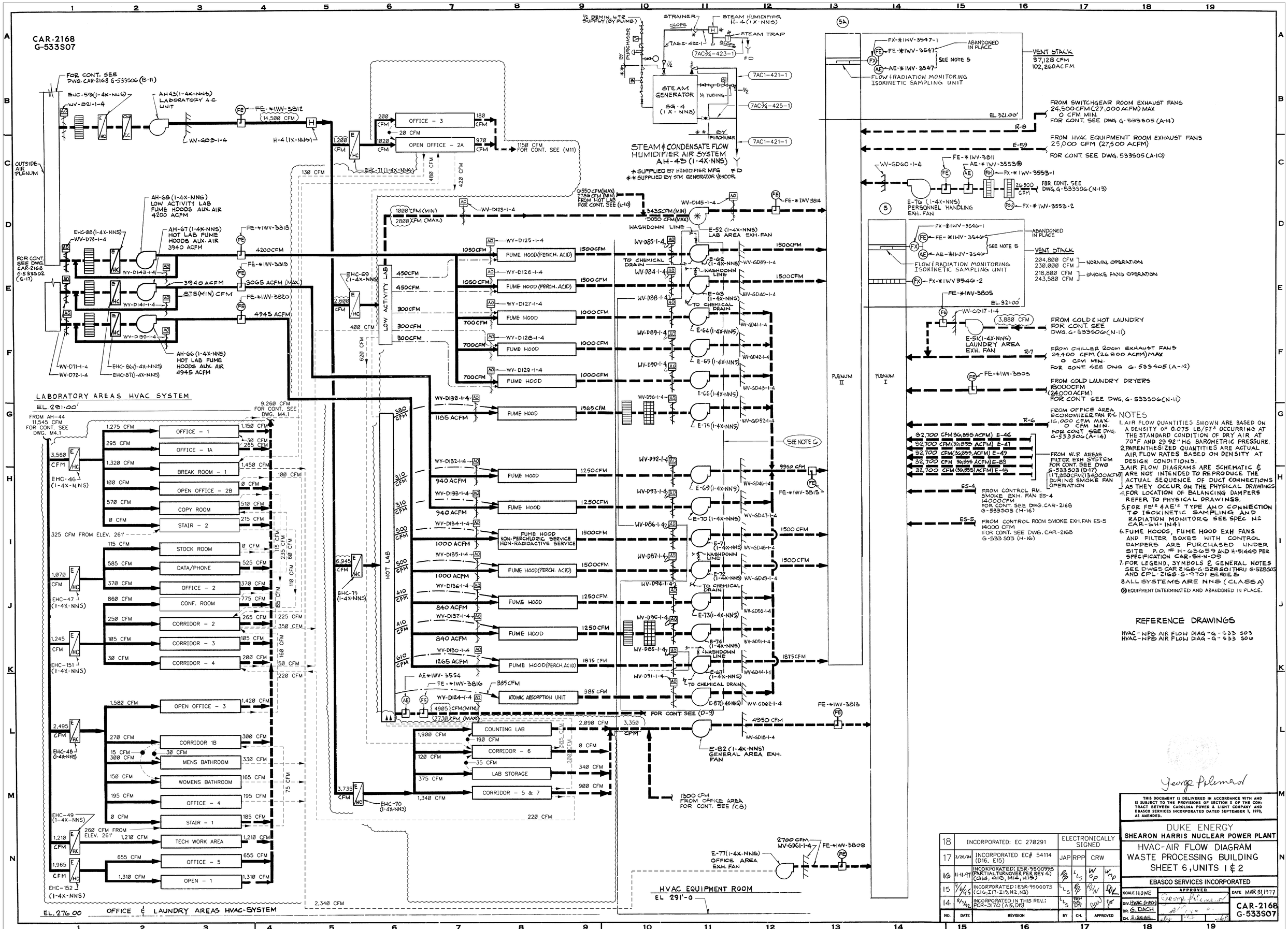
CAR-2168
G-533S07
LABORATORY AREAS HVAC SYSTEM
EL. 291'-00'
OFFICE & LAUNDRY AREAS HVAC-SYSTEM
EL. 276'-00
HOT LAB
LOW ACTIVITY LAB
STEAM & CONDENSATE FLOW
HUMIDIFIER AIR SYSTEM
AH-43 (1-4X-NNS)
STEAM GENERATOR
SG-4 (1X-NNS)
HVAC EQUIPMENT ROOM
EL 291'-0
PLENUM II
PLENUM I
VENT STACK
97,128 CFM
102,260 ACFM
VENT STACK
204,800 CFM
230,000 CFM
NORMAL OPERATION
218,800 CFM
243,580 CFM
SMOKE FANS OPERATION
FROM SWITCHGEAR ROOM EXHAUST FANS
24,500 CFM (27,000 ACFM) MAX
0 CFM MIN.
FOR CONT. SEE DWG. G-533505 (A-14)
FROM HVAC EQUIPMENT ROOM EXHAUST FANS
25,000 CFM (27,500 ACFM)
FOR CONT. SEE DWG. 533505 (A-10)
FROM COLD & HOT LAUNDRY
FOR CONT. SEE
DWG. G-533506 (N-11)
FROM CHILLER ROOM EXHAUST FANS
24,400 CFM (26,800 ACFM) MAX
0 CFM MIN.
FOR CONT. SEE DWG. G-533505 (A-12)
FROM COLD LAUNDRY DRYERS
18000 CFM
(24,000 ACFM)
FOR CONT. SEE DWG. G-533506 (N-11)
FROM OFFICE AREA
ECONOMIZER FAN R-6
16,000 CFM MAX.
0 CFM MIN.
FOR CONT. SEE DWG.
G-533506 (A-14)
FROM W.P. AREAS
FILTER EXH SYSTEM
FOR CONT. SEE DWG
G-533503 (D17)
117,350 CFM (134,000 ACFM)
DURING SMOKE FAN
OPERATION
FROM CONTROL RM.
SMOKE EXH. FAN ES-4
14000 CFM
FOR CONT. SEE DWG. CAR-2168
G-533503 (H-16)
FROM CONTROL ROOM SMOKE EXH. FAN ES-5
19000 CFM
FOR CONT. SEE DWG. CAR-2168
G-533 503 (H-16)
FROM WASHDOWN LINE
TO CHEMICAL DRAIN
FOR CONT. SEE (D-9)
1300 CFM
FROM OFFICE AREA
FOR CONT. SEE (C8)
2700 CFM
WV-GD61-1-4
E-77 (1-4X-NNS)
OFFICE AREA
EXH. FAN
E-82 (1-4X-NNS)
GENERAL AREA EXH.
FAN
4950 CFM
FE-*1WV-3813
FE-*1WV-3809
SEE NOTE 5
ABANDONED
IN PLACE
FLOW & RADIATION MONITORING
ISOKINETIC SAMPLING UNIT
EL. 321.00'
FOR CONT. SEE
DWG. CAR-2168
G-533502
(G-17)
FOR CONT. SEE
DWG. CAR-2168 (B-11)
OUTSIDE
AIR
PLENUM
SEE NOTE G
NOTES
1. AIR FLOW QUANTITIES SHOWN ARE BASED ON A DENSITY OF 0.075 LB/FT³ OCCURRING AT THE STANDARD CONDITION OF DRY AIR AT 70°F AND 29.92" HG BAROMETRIC PRESSURE.
2. PARENTHESIZED QUANTITIES ARE ACTUAL AIR FLOW RATES BASED ON DENSITY AT DESIGN CONDITIONS.
3. AIR FLOW DIAGRAMS ARE SCHEMATIC & ARE NOT INTENDED TO REPRODUCE THE ACTUAL SEQUENCE OF DUCT CONNECTIONS AS THEY OCCUR ON THE PHYSICAL DRAWINGS
4. FOR LOCATION OF BALANCING DAMPERS REFER TO PHYSICAL DRAWINGS.
5. FOR FE's & AE's TYPE AND CONNECTION TO ISOKINETIC SAMPLING AND RADIATION MONITORG SEE SPEC № CAR-SH-IN41
6. FUME HOODS, FUME HOOD EXH FANS AND FILTER BOXES WITH CONTROL DAMPERS ARE PURCHASED UNDER SITE P.O. # H-G3659 AND H-51449 PER SPECIFICATION CAR-SH-N-09
7. FOR LEGEND, SYMBOLS & GENERAL NOTES SEE DWGS CAR 2168-G-528501 THRU G-528505 AND CPL-2168-S-9701 SERIES
8. ALL SYSTEMS ARE NNS (CLASS A)
(S) EQUIPMENT DETERMINATED AND ABANDONED IN PLACE.
REFERENCE DRAWINGS
HVAC-WPB AIR FLOW DIAG-G-533 503
HVAC-WPB AIR FLOW DIAG-G-533 506
THIS DOCUMENT IS DELIVERED IN ACCORDANCE WITH AND IS SUBJECT TO THE PROVISIONS OF SECTION X OF THE CONTRACT BETWEEN CAROLINA POWER & LIGHT COMPANY AND EBASCO SERVICES INCORPORATED DATED SEPTEMBER 1, 1970, AS AMENDED.
DUKE ENERGY
SHEARON HARRIS NUCLEAR POWER PLANT
HVAC-AIR FLOW DIAGRAM
WASTE PROCESSING BUILDING
SHEET 6, UNITS 1 & 2
EBASCO SERVICES INCORPORATED
APPROVED
DATE MAR 31, 1977
CAR-2168
G-533S07
18 INCORPORATED: EC 270291 ELECTRONICALLY SIGNED
17 3/26/04 INCORPORATED EC# 54114 (D16, E15) JAP RPP CRW
16 11-11-97 INCORPORATED: ESR-9500995 (PARTIAL TURNOVER PER REV 4) (G14, G15, H14, H15)
15 9/6/95 INCORPORATED: ESR-9500073 (C16, I17-I19, N2, N3)
14 8/1/92 INCORPORATED IN THIS REV.: PCR-3170 (A15, D15)
NO. DATE REVISION BY CH. APPROVED

Facility Code :	HNP
Applicable Facilities :	HNP
Document Number :	1364-000878
Document Revision Number :	010
Document EC Number :	
Change Reason :	EC0000412540
Document Title :	TURBINE TRIP RUNBACKS & OTHER SIGS W/REQUIREMENTS

Pearson, Drew	PREPARER	8/1/2018
Morales, Gustavo J	APPROVER	8/13/2018
Martinelli, Nick	APPROVER	8/13/2018

Notes :

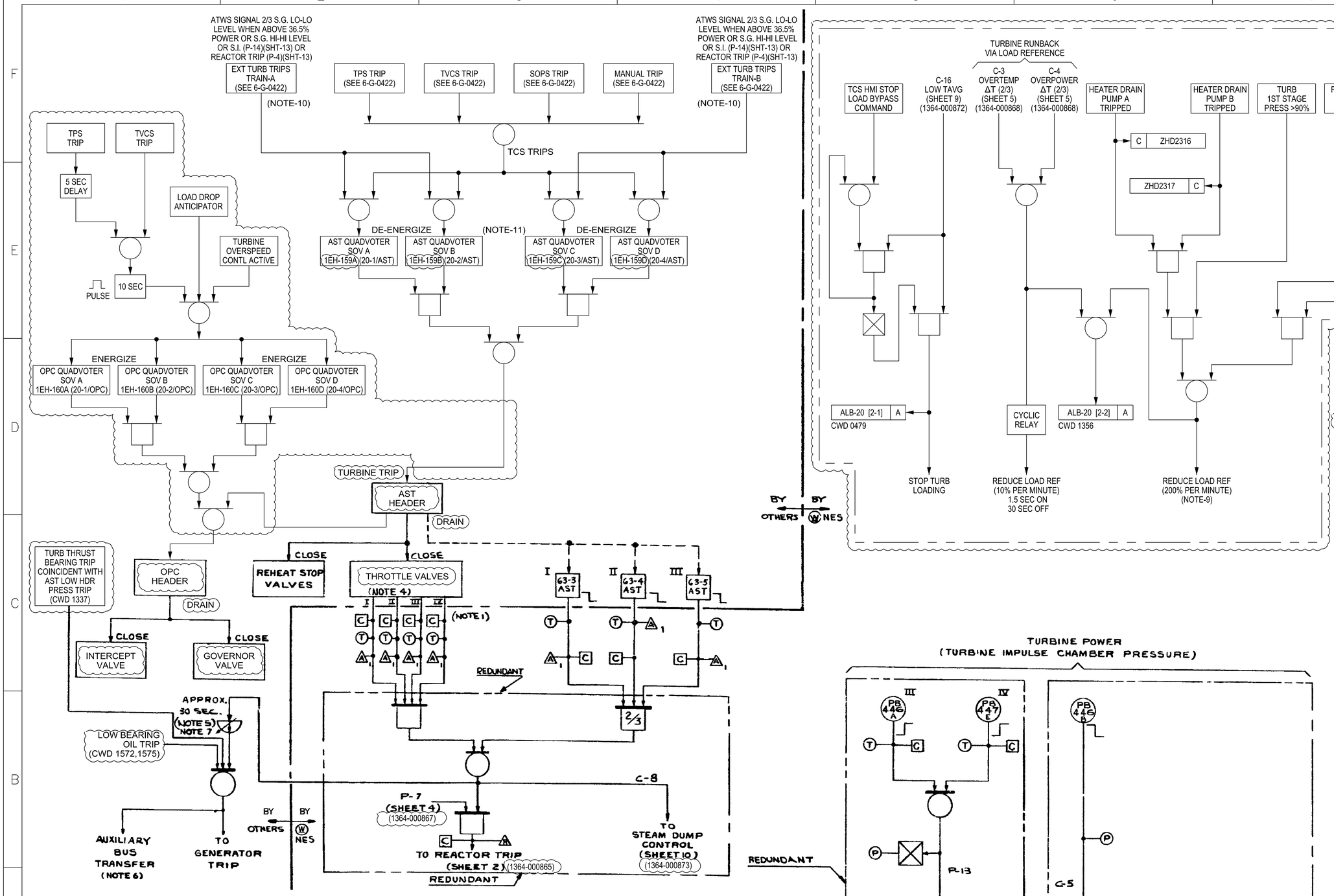

NOTES:

1. THESE SIGNALS INDICATE THE CLOSING OF THE STOP VALVES. POSITION DETECTION IS ACCOMPLISHED BY 2 SWITCHES PER STOP VALVE, ONE FOR EACH TRAIN. THE LOGIC SHOWN IS FOR 4 STOP VALVES. THE ACTUAL NUMBER OF STOP VALVES MAY BE DIFFERENT.
2. EXCEPT WHERE INDICATED OTHERWISE, REDUNDANCY IS INDICATED IN REGARDS TO (W) NES REQUIREMENTS ONLY.
3. DELETED.
4. OPEN/SHUT INDICATION IN CONTROL ROOM FOR EACH STOP VALVE.
5. GENERATOR MOTORING PROTECTION SHOULD NOT DEFEAT THE 30 SEC DELAY.
6. THE REACTOR COOLANT PUMP BUS TRANSFER SHOULD BE COMPLETED WITHIN SIX CYCLES IN ORDER TO INSURE COMPATIBILITY WITH THE UNDERFREQUENCY TRIP OF THE REACTOR COOLANT PUMP CIRCUIT BREAKERS. THE TRANSFER TIME LIMIT MAY BE EXTENDED ANOTHER 4 CYCLES TO A TOTAL OF NOT GREATER THAN 10 CYCLES IF THE SYSTEM DYNAMICS ARE SUCH THAT A RCP TRIP DOES NOT OCCUR. THE 10 CYCLE LIMIT IS FOR PUMP MOTOR PROTECTION.
7. (W) STD REQUIRES THE THIRTY SECOND TIME DELAY TO BE REDUNDANT. ONE TIMER IS CONNECTED TO THE TRAIN A OUTPUT OF THE PROTECTION LOGIC SYSTEM AND THE OTHER TIMER IS CONNECTED TO THE TRAIN B OUTPUT. THE TIMER OUTPUTS ARE WIRED SO THAT EITHER WILL ACTUATE A GENERATOR TRIP.
8. DELETED.
9. THE 200% PER MINUTE RATE IS CHARACTERISTIC OF A (W) STEAM TURBINE DIVISION RUNBACK SYSTEM WITH A CONTINUOUS CONTACT CLOSURE. IN ACTUAL OPERATION THE SMALL DUTY CYCLE OF THE CONTACT CLOSURE FROM THE CYCLIC TIMER WILL GIVE A RUNBACK RATE MUCH LESS THAN 200% PER MINUTE.
10. THE TWO INPUT SIGNALS IN ONE TRAIN PERFORM THE SAME FUNCTION FROM IDENTICAL SIGNAL SOURCES. TWO INPUT SIGNALS ARE PROVIDED FROM SEPARATE PROTECTION SYSTEM OUTPUT RELAYS TO FACILITATE TESTING OF THE PROTECTION SIGNALS THROUGH THE INDIVIDUAL SOLENOID VALVES WITHOUT A TURBINE TRIP.
11. SEPARATION AND ISOLATION MUST BE PROVIDED TO SEPARATE THE SIGNALS IN A PROTECTION TRAIN FROM ALL OTHER SIGNALS INCLUDING THE OTHER TRAIN AND NON-TRAIN AS REQUIRED BY THE REACTOR PROTECTION CRITERIA IEEE STANDARD 279 AND 384

REV	DESCRIPTION	APPROVED
10	INCORPORATED: EC 412540	ELECTRONICALLY SIGNED
9	INCORPORATED: EC#284243	ELECTRONICALLY SIGNED
8	INCORPORATED: ESR0000262	–

DUKE ENERGY

QUALITY LEVEL: QUALITY

PLANT: HARRIS PROJECT – UNIT 1 SCALE: N/A

TITLE: TURBINE TRIP RUNBACKS & OTHER SIGS W/ REQUIREMENTS

PLANT DWG NO.: 1364-000878

WESTINGHOUSE PROPRIETARY DATA

THIS DOCUMENT CONTAINS PROPRIETARY INFORMATION OF THE WESTINGHOUSE ELECTRIC CORPORATION WATER REACTOR DIVISIONS. IT IS TRANSMITTED TO YOU IN CONFIDENCE AND TRUST, AND IS TO BE RETURNED UPON REQUEST. ITS CONTENTS MAY NOT BE DISCLOSED IN WHOLE OR IN PART TO OTHERS OR USED FOR OTHER THAN THE PURPOSE FOR WHICH TRANSMITTED WITHOUT THE PRIOR WRITTEN PERMISSION OF THE WESTINGHOUSE WATER REACTOR DIVISIONS.

DFTM. P CRALLE 3-2-72
CHKR.
DES. ENG. 5-10-72
MFG. ENG.
MTLS. ENG.
APP.
APP.
APP.
DESIGN MGR. 5-11-72

Westinghouse Electric Corporation
NUCLEAR ENERGY SYSTEMS, PITTSBURGH, PA. U.S.A.
TITLE: CAROLINA POWER & LIGHT CO. SHEARON HARRIS UNITS 1,2,3 & 4 - FUNCTIONAL DIAG. TURBINE TRIP, RUNBACKS & OTHER SIGNALS (W REQUIREMENTS)
SCALE ~ 108D831
DIMENSIONS IN INCHES SHEET 15
DO NOT SCALE SUB 12345

DUKE ENERGY

Facility Code :	HNP
Applicable Facilities :	HNP
Document Number :	1364-002795 S01
Document Revision Number :	018
Document EC Number :	
Change Reason :	EC0000412470
Document Title :	EH FLUID SYSTEM & LUBE OIL DIAGRAM

Brennan, Jerry W.	Preparer	5/23/2018
Pitser, Ken	approver	5/23/2018

Notes :

DWG. NO. 1364-002795 S01

LEGEND

- LIMIT SWITCH
- VALVE-NORMALLY OPEN
- VALVE-NORMALLY CLOSED
- VALVE-SWING CHECK
- SOLENOID VALVE-NORMALLY OPEN
- SOLENOID VALVE-NORMALLY CLOSED
- 3-WAY SOLENOID VALVE-ONE SIDE NORMALLY CLOSED
- FLOW CONTROL VALVE
- RELIEF VALVE
- ADJUSTABLE CHECK VALVE
- ANGLE TYPE BALL CHECK VALVE
- ADJUSTABLE ORIFICE
- NOZZLE
- FLOAT SWITCH (LEVEL)
- ACCUMULATOR (BLADDER TYPE)
- FLEXIBLE CONNECTION
- FIXED ORIFICE
- FILTER OR STRAINER
- IN LINE STRAINER
- THERMOWELL
- PRESS. SWITCH
- THERMOSTAT OR TEMP SWITCH
- BALL CHECK VALVE
- SPRING LOADED CHECK VALVE
- DIAPHRAGM INTERFACE VALVE
- TEMPERATURE CONTROL VALVE
- DIRECTIONAL CONTROL VALVE ONE SIDE NORMALLY CLOSED
- ACCUMULATOR (PISTON TYPE)
- GAUGE
- THERMOMETER
- TO DRAIN
- TRANSDUCER
- BALL VALVE

LINE CODE

- DRAIN LINE
- ELECTRICAL
- ENCLOSURE
- STATION AIR
- HIGH PRESSURE FLUID OR LUBE OIL
- TRIP LINE FOR CONTROL

NOTE

FOR LIST OF ELECTRICAL SYMBOLS REFER TO WESTINGHOUSE DRAWING "ELECTRICAL EQUIPMENT LIST"

FOR LIST OF PRESSURE GAUGES THERMOMETERS, THERMOCOUPLES, ETC REFER TO WESTINGHOUSE CUSTOMER INFORMATION MANUAL UNDER SECTION TITLED SUPPLEMENTARY DESIGN INFORMATION.

* DENOTES OPTIONAL EQUIPMENT CUSTOMER TO ADVISE ITEMS TO BE PURCHASED. OPTIONAL ITEMS WILL NOT BE PROVIDED UNLESS SPECIFIED IN THE CONTRACT OR ORDERED VIA CONTRACT CHANGE.

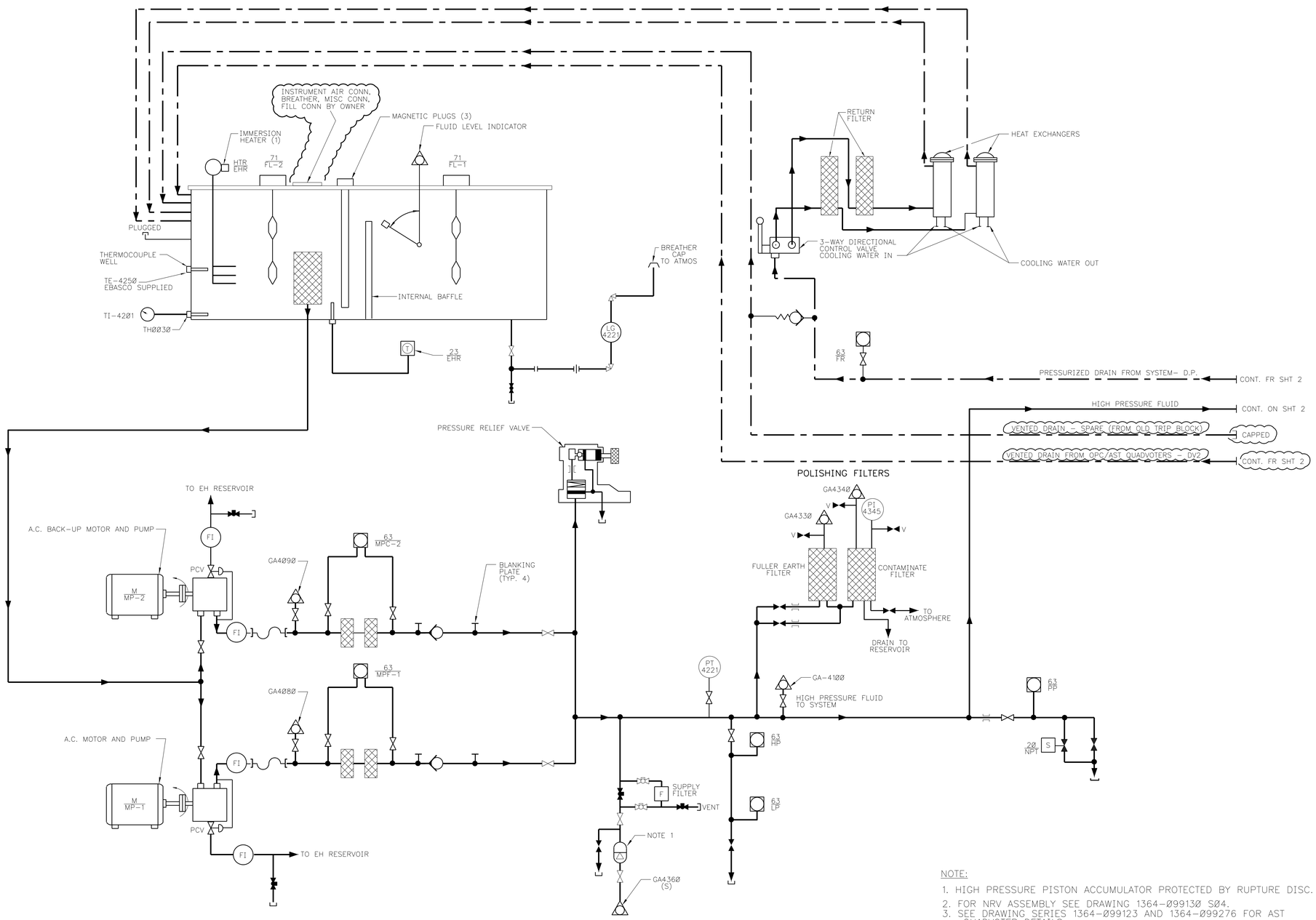

EH FLUID SUPPLY SYSTEM

NOTE:

1. HIGH PRESSURE PISTON ACCUMULATOR PROTECTED BY RUPTURE DISC.
2. FOR NRV ASSEMBLY SEE DRAWING 1364-Ø9913Ø SØ4.
3. SEE DRAWING SERIES 1364-Ø99123 AND 1364-Ø99276 FOR AST QUADVOTER DETAILS.
4. SEE DRAWING SERIES 1364-Ø99124 AND 1364-Ø99125 FOR OPC QUADVOTER DETAILS.

REV	DESCRIPTION	APPR'D
18	INCORPORATED: EC 412470	ELECTRONICALLY SIGNED
17	INCORPORATED: EC 284339	ELECTRONICALLY SIGNED

WESTINGHOUSE ELECTRIC CORPORATION
STEAM TURBINE DIVISION
LESTER, PA, U.S.A.

TITLE: EH FLUID SYSTEM & LUBE OIL DIAGRAM

P.O. NUMBER: NY 435ØØ1

DRAWING NO. 735J666

QUALITY LEVEL: NON SAFETY RELATED

DUKE ENERGY

PLANT: HARRIS NUCLEAR PROJECT - UNIT 1 SCALE: NONE

TITLE: E. H. FLUID SYSTEM & LUBE OIL DIAGRAM

PLANT DWG NO.: 1364-ØØ2795 SØ1

DUKE ENERGY

Facility Code :	HNP
Applicable Facilities :	HNP
Document Number :	1364-002795 S02
Document Revision Number :	018
Document EC Number :	
Change Reason :	EC0000284337;EC0000284339;EC0000294229
Document Title :	E.H. FLUID SYSTEM AND LUBE OIL DIAGRAM

Brennan, Jerry W.	Preparer	5/4/2018
Pitser, Ken	APPROVER	5/5/2018

Notes :

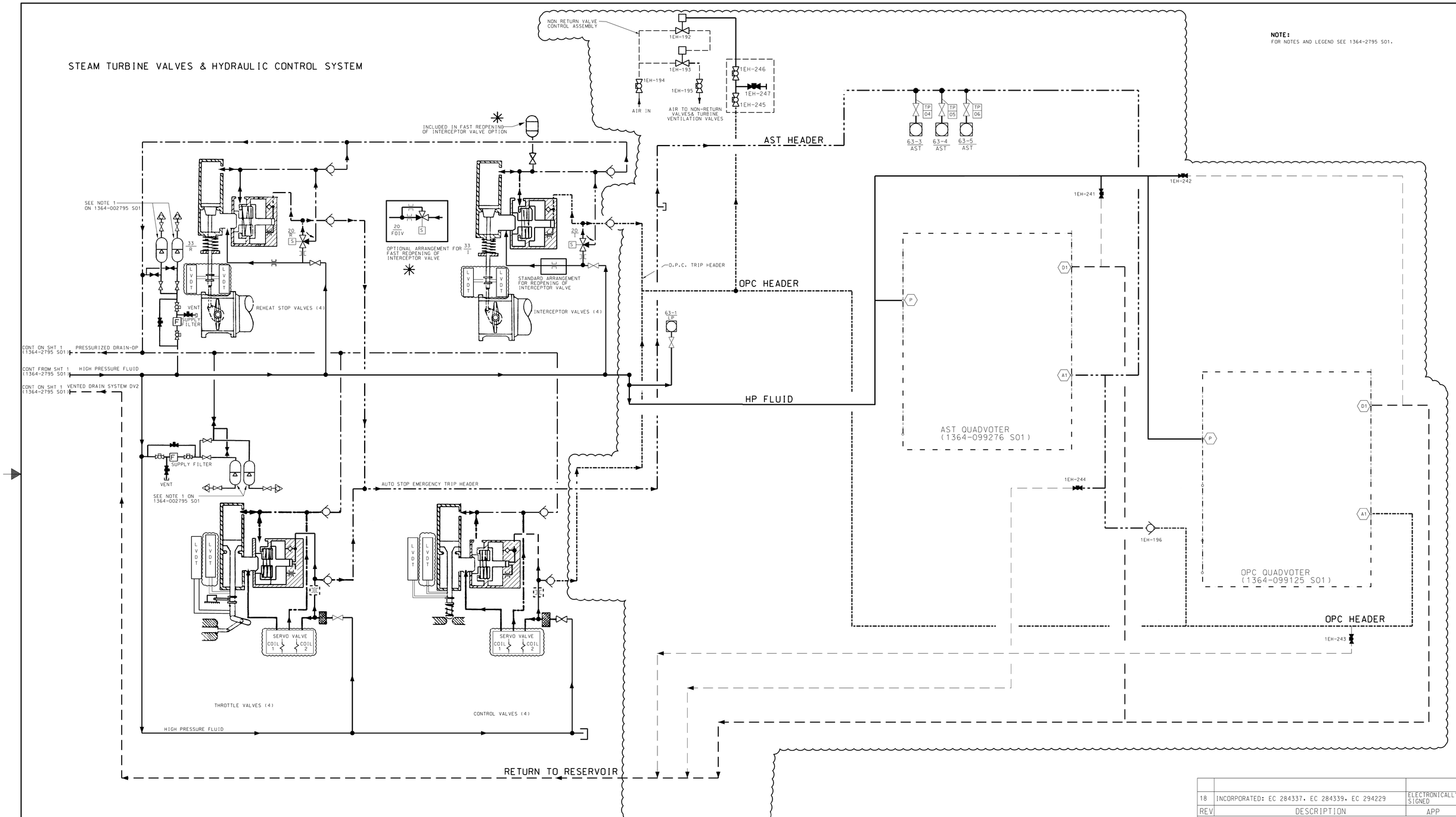

REV	DESCRIPTION	APP
18	INCORPORATED: EC 284337, EC 284339, EC 294229	ELECTRONICALLY SIGNED

QUALITY LEVEL: NON-SAFETY RELATED

DUKE ENERGY

PLANT: HARRIS NUCLEAR PLANT - UNIT 1 SCALE: N/A

TITLE: E.H. FLUID SYSTEM & LUBE OIL DIAGRAM

PLANT DWG NO.: 1364-002795 S02

Westinghouse Electric Corporation
STEAM TURBINE DIVISION LESTER PA U.S.A.
SO 1344681
04 EH FLU SYS & LUB DIAG 735J666
DWG. NOT TO SCALE 2-26-75
700 296 000 SHEET 2 OF 3

DUKE ENERGY

Facility Code :	HNP
Applicable Facilities :	HNP
Document Number :	1364-002795 S03
Document Revision Number :	019
Document EC Number :	
Change Reason :	EC0000284339;EC0000294229
Document Title :	1-2 E.H.FLUID SYS. & LUBE DIA.1-3

Brennan, Jerry W.	PREPARER	5/3/2018
Pitser, Ken	APPROVER	5/3/2018

Notes :

TURBINE-GENERATOR LUBRICATION SYSTEM

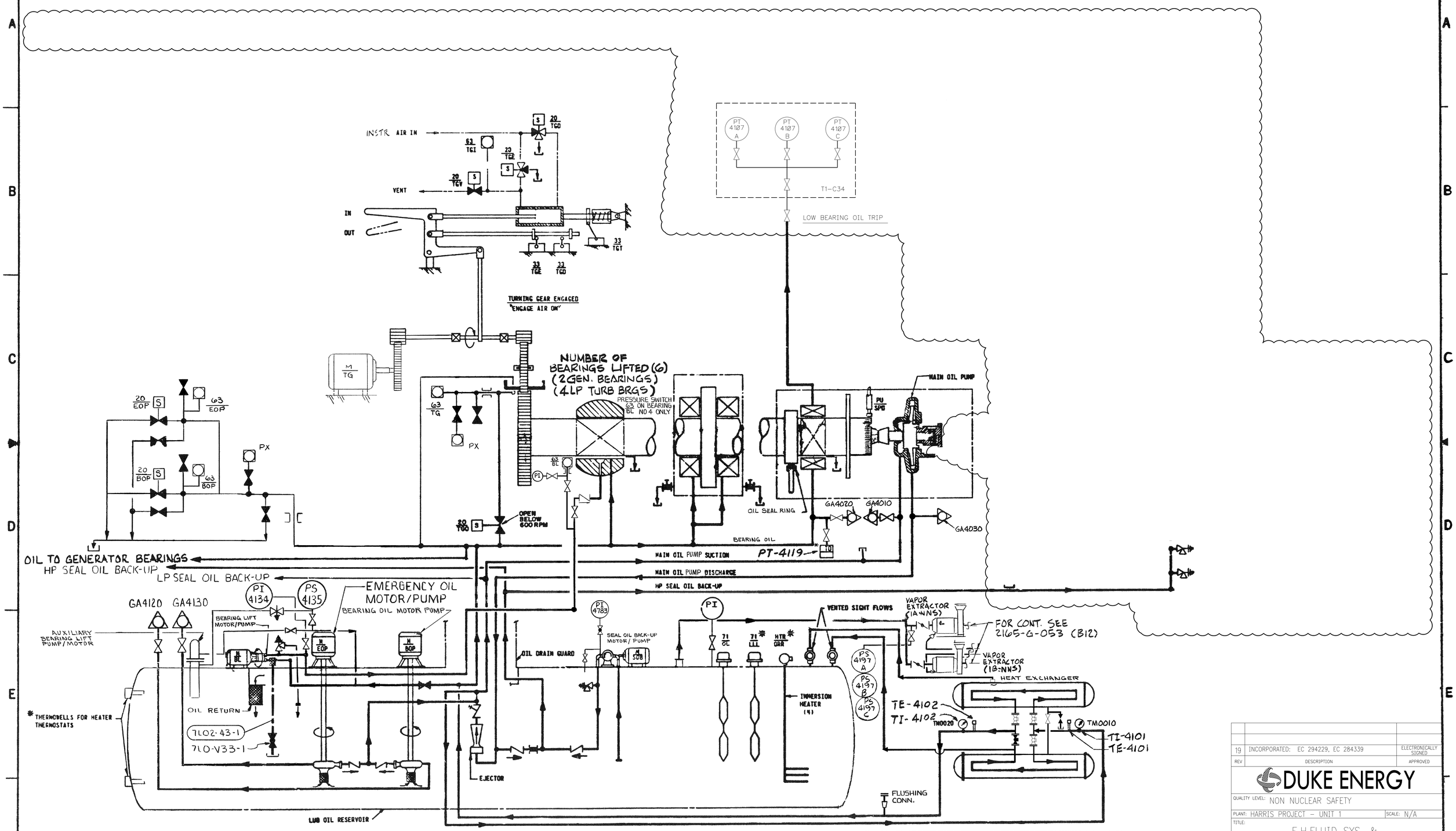

REV	DESCRIPTION	APPROVED
19	INCORPORATED: EC 294229, EC 284339	ELECTRONICALLY SIGNED

DUKE ENERGY

QUALITY LEVEL: NON NUCLEAR SAFETY

PLANT: HARRIS PROJECT – UNIT 1 SCALE: N/A

TITLE: E.H.FLUID SYS. & LUBE DIA.

PLANT DWG NO.: 1364-002795 S03

RESPONSIBLE ENGR.

FOR SUPPLEMENTARY MANUFACTURING DATA SEE DRAWING 2D4GIE

Westinghouse Electric Corporation
STEAM TURBINE DIVISION, LESTER, PA. U.S.A.

TITLE: EH FLU SYS + LUB DIAG

735J666

ISSUE DATE: 2-26-75

SHEET 3 OF 3

CHANGE ITEM: SEE SHT #1

DUKE ENERGY

Facility Code :	HNP
Applicable Facilities :	HNP
Document Number :	1364-003628
Document Revision Number :	017
Document EC Number :	
Change Reason :	EC0000413175
Document Title :	CONDENSATE POLISHER FLOW DIAGRAM TURBINE BLDG. EL. 240.00`

Pearson, Drew	PREPARER	10/10/2018
Almond, Erv	APPROVER	10/10/2018

Notes :

DWG. NO. 1364-3628

DESIGN PRESS.-300 PSIG
DESIGN TEMP.-140°F
OPER. PRESS.-270 PSIG-MAX.
OPER. TEMP.-140°F-MIN.

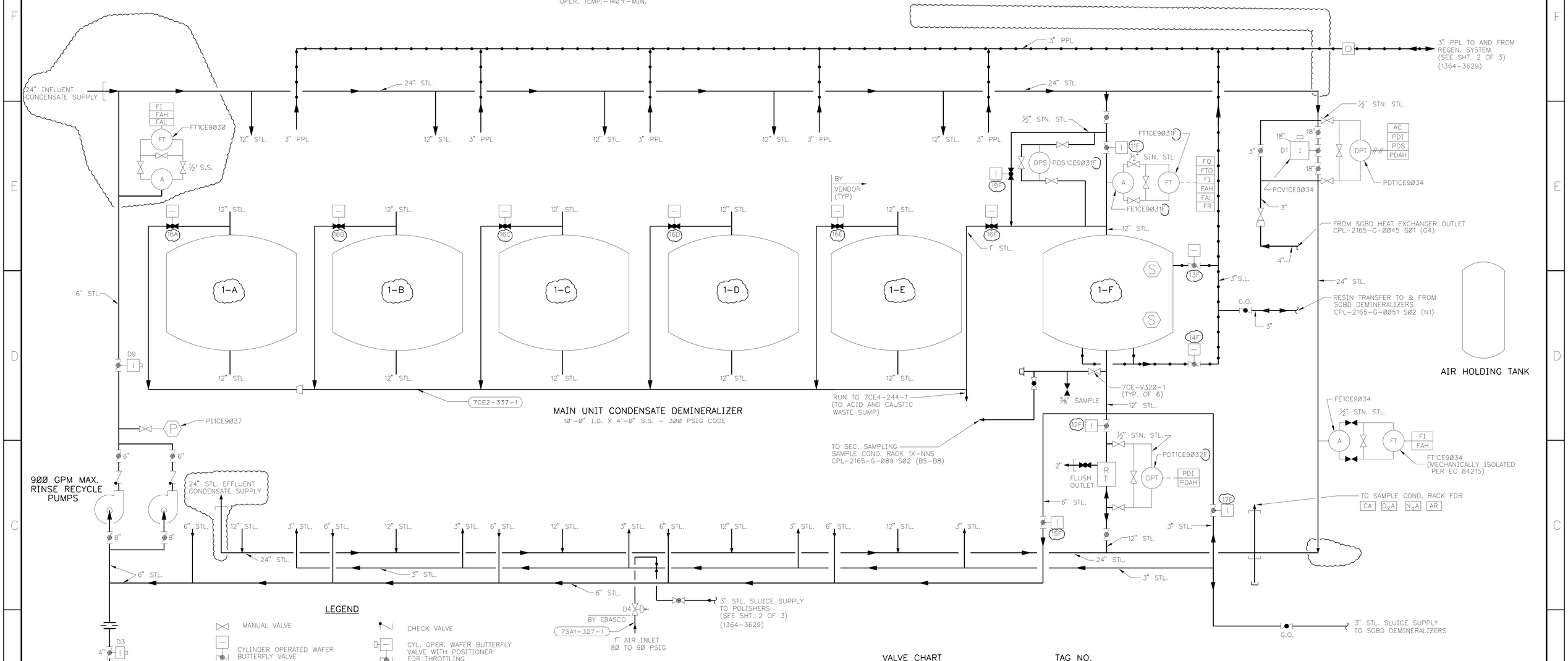

LEGEND

- MANUAL VALVE
- CYLINDER OPERATED WAFER BUTTERFLY VALVE
- MANUAL OPERATED WAFER BUTTERFLY VALVE
- PLUG VALVE
- PLUG VALVE WITH OPERATOR
- PANEL MOUNTED
- WASTE SUMP
- LOCAL MOUNTED
- FIELD MOUNTED
- ORIFICE PLATE
- ORIFICE NIPPLE
- COCHRANE PIPING LIMITS
- ANNUBAR
- ELECTRICAL
- RESIN TRAP
- FLOW SIGHT GLASS
- DIAPH. OPER. SAUNDERS PAT. VALVE-SPRING TO CLOSE
- CHECK VALVE
- CYL. OPER. WAFER BUTTERFLY VALVE WITH POSITIONER FOR THROTTLING
- CYL. OPER. WAFER BUTTERFLY VALVE WITH STOP FOR RATE CONTROL

PPL - POLYPROPYLENE
S.S. - #316 STAINLESS STEEL
STL. - STEEL
AC AIR CONTROL
CC CONDUCTIVITY CELL
FAH HIGH FLOW ALARM
FAL LOW FLOW ALARM
FI FLOW INDICATOR
FQ FLOW INTEGRATOR
FR FLOW RECORDER
FT FLOW TRANSMITTER
FTO FLOW TOTALIZER
P PRESSURE INDICATOR
PDAH HIGH DIFF. PRESS. ALARM
PDI DIFF. PRESS. INDICATOR
PDS DIFF. PRESS. SWITCH
DPT DIFF. PRESS. TRANS.
N_aR SODIUM RECORDER
N_aA SODIUM ALARM
S SIGHT GLASS
O_2A OXYGEN ANALYZER
O_2R OXYGEN RECORDER
CA CONDUCTIVITY ANALYZER
AR MULTIVARIABLE RECORDER
G.O. GEAR OPERATED

VALVE CHART

			TAG NO.
D1	18"	BYPASS	91-75-007
D3	4"	DRAIN TO WASTE	91-75-006
D9	6"	RECYCLE TO INLET HEADER	91-75-005
D4	1"	AIR INLET VALVE	91-75-079
11A TO 11F	12"	CONDENSATE INFLUENT	29-75-003
12A TO 12F	12"	CONDENSATE EFFLUENT	29-75-004
13A TO 13F	3"	MIXED RESIN INLET	29-75-007
14A TO 14F	3"	MIXED RESIN OUTLET	29-75-008
15A TO 15F	6"	RECYCLE OUTLET & DRAIN	29-75-005
16A TO 16F	1"	VENT - PLUG VALVE	29-75-013
17A TO 17F	3"	SLUICE INLET	29-75-006
19A TO 19F	3/4"	PLUG VALVE BYPASS	29-75-014

REV	DATE	DESCRIPTION	DWN	CHK	DPPE
17		INCORPORATED: EC# 413175	ELECTRONICALLY SIGNED		
16		INCORPORATED: EC# 84215 (C8,D7)	ELECTRONICALLY SIGNED		
15	10/24/00	INCORPORATED: ESR-950153 (C6,C7)	ARM	WFL	RPP FOR DLS
14	4/29/00	INCORPORATED: ESR 99-00325 (E7)	ARM	RPP	DLS
13	12/30/99	INCORPORATED: ESR-950153 (C4,C5,D5)	ARM	RPP	DLS

CAROLINA POWER AND LIGHT COMPANY
SHEARON HARRIS NUCLEAR PLANT
WAKE COUNTY-NORTH CAROLINA
PROJECT NO.-CAR-SH-N-10
UNIT NO. 1
P.O. # NY-435100

COCHRANE DIVISION
CRANE CO.
MANUFACTURING ENGINEERS
KING OF PRUSSIA, PA. 19406

DWG NO. 179522 REV. A
SHT.1 OF 3

DUKE ENERGY
NUCLEAR ENGINEERING DEPARTMENT

PLANT: HARRIS NUCLEAR PROJECT UNIT-1 | SCALE: NONE

TITLE:
CONDENSATE POLISHER
FLOW DIAGRAM
TURBINE BLDG. EL. 240.00'

PLANT DWG NO.: 1364-00 3628

CAD FILE: CAD

LTR.	DATE	REVISION		
A	7-7-77	DRAWING UPDATED.	② UTW	

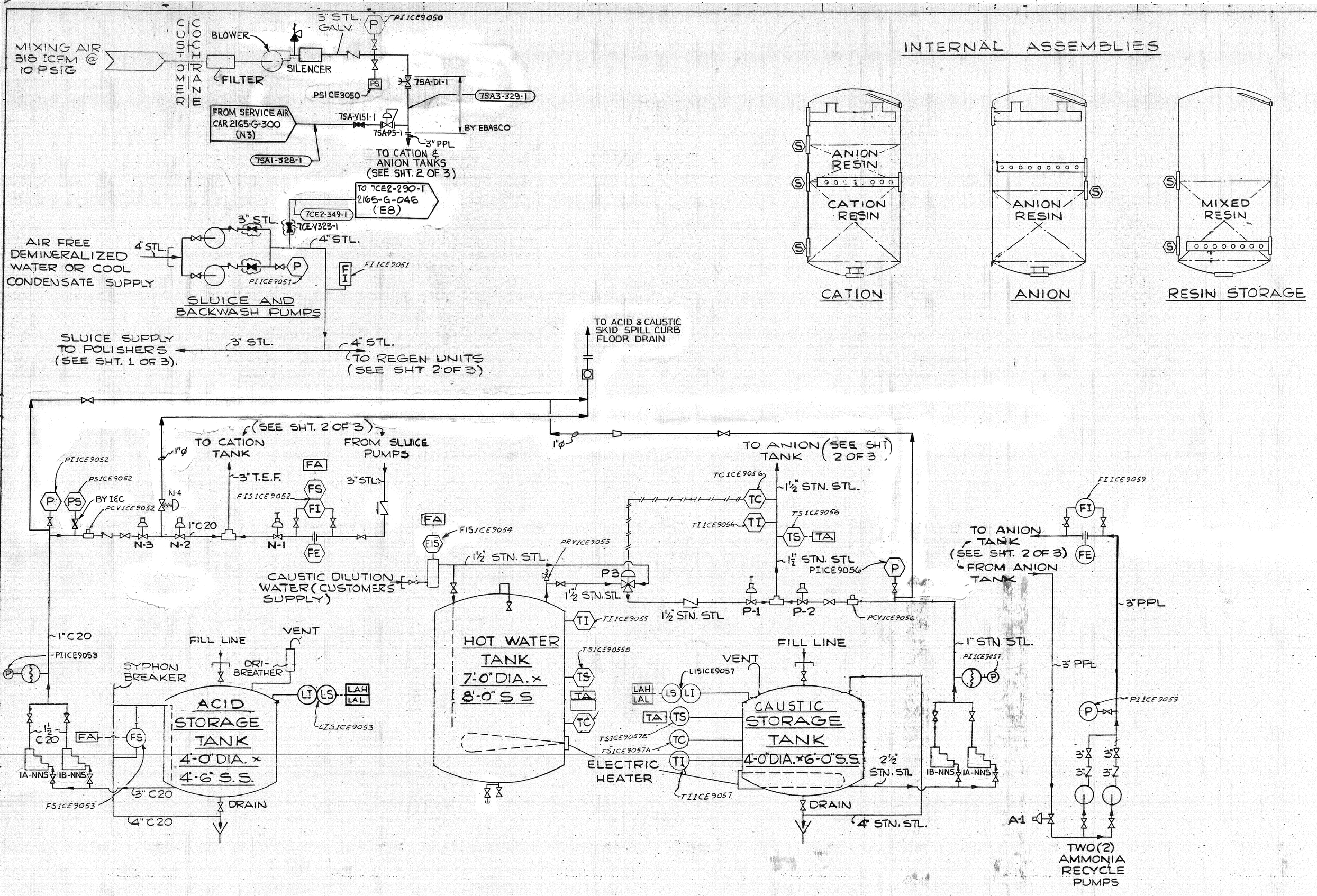

INTERNAL ASSEMBLIES

NO	DATE	REVISION	BY	CK	SUP	APP
		CP&L-HPES FIELD DRAWING REVISION				
5	8/14/86	INCORPORATED: FCR-I-3330, FCR-P-2744, FCR-P-4693, FCR-SP-319 R1, FCR-SP-320R1; REVISED: LINE NO.	RRM	GF		
6	12/16/86	INCORPORATED IN THIS REVISION: PW-P-5125	RHM	TPW		
7	1/29/87	INCORPORATED IN THIS REVISION: PCR-614	RHM	TPW		
8	6/15/88	INCORPORATED IN THIS REVISION: PCR-1536	CDH	TPW		
9	12/16/88	INCORPORATED IN THIS REVISION: PCR-4759	DTW			
10	12/11/91	INCORPORATED IN THIS REVISION: PCR-3492	ESP	RPB		
11	9/10/92	INCORPORATED IN THIS REVISION: PCR-5671	ESP			
12	2/24/98	INCORPORATED EC411328	JAF		BEO	

LEGEND

- MANUAL VALVE
- CHECK VALVE
- DIAPHRAGM OPERATED SAUNDERS PATENT VALVE SPRING TO CLOSE
- DIAPHRAGM OPERATED SAUNDERS PATENT VALVE SPRING TO OPEN
- BLEND VALVE
- RELIEF VALVE
- BACK PRESSURE VALVE
- PANEL MOUNTED
- FIELD MOUNTED
- LOCAL MOUNTED
- WASTE SUMP
- MIXING TEE
- PNEUMATIC
- ELECTRICAL
- [ ] COCHRANE PIPING LIMITS
- DIAPH. OPER. SAUNDERS PAT. VALVE - SPRING TO CLOSE WITH ADJUSTABLE STOP
- PULSATROL

FA	FLOW ALARM
FE	FLOW ELEMENT
FI	FLOW INDICATOR
FS	FLOW SWITCH
LAH	HIGH LEVEL ALARM
LAL	LOW LEVEL ALARM
LI	LEVEL INDICATOR
LS	LEVEL SWITCH
P	PRESS. INDICATOR
PS	PRESS. SWITCH
TA	TEMP. ALARM
TC	TEMP. CONTROLLER
TI	TEMP. INDICATOR
TS	TEMP. SWITCH
S	SIGHT GLASS
	POSITIVE DISPLACEMENT PUMP
T.E.F	TEFLON LINED
S.S.	STAINLESS STEEL #316 (STN. STL.)
STL.	STEEL
PPL	POLYPROPYLENE LINED

VALVE CHART

			TAG NO.
N-1	2½"	ACID DILUTION INLET	35-75-005
N-2	1"	ACID SHUTOFF (WATER SIDE)	35-75-003
N-3	1"	ACID SHUTOFF (ACID SIDE)	35-75-003
N-4	1"	ACID LEAKOFF	35-75-004
P-1	1¼"	CAUSTIC DILUTION INLET	36-75-006
P-2	1"	CAUSTIC SHUTOFF	36-75-005
P-3	¾"	BLEND VALVE	36-75-022
A-1	3"	AMMONIA RECYCLE	37-75-004
A-2	½"	CONCENTRATED AMMONIA SHUT-OFF	37-75-003

REV.	DATE	BY	APP	DESCRIPTION
2	3/13/81	V.V	[illegible]	ADDED TAG NO'S PREVIOUS SHEET 4-4 N-5 3-1 EBASCO REVISION
1	3/6/81	[illegible]	[illegible]	FIELD DF CHGS OFF SHEET 8-2 EBASCO REVISION

SECT. — SUB-SECT. — SD. 1132 — DATE

THIS DRAWING IS FOR APPROVAL-RETURN ONE PRINT IMMEDIATELY TO AVOID DELAY IN FABRICATION

CERTIFIED CONST. DRAWING FOR YOUR ORDER NUMBER NY-435100

DESTROY PREVIOUS COPIES THIS PRINT DUPLICATES PRINTS EXCEPT FOR CHANGES AS SPECIFIED IN REVISION BLOCK

CAROLINA POWER AND LIGHT COMPANY
SHEARON HARRIS NUCLEAR PLANT
WAKE COUNTY-NORTH CAROLINA
PROJECT NO. - CAR-SH-N-10
UNIT NO. - 1

FLOW DIAGRAM

COCHRANE DIVISION
CRANE CO.
MANUFACTURING ENGINEERS
KING OF PRUSSIA, PA.
19406

THIS DOCUMENT IS THE PROPERTY OF CRANE CO., AND THEREBY SUBJECT TO CONFIDENTIAL USE, IT SHALL NOT BE REPRODUCED FURNISHED TO OTHERS OR USED FOR OTHER THAN ITS INTENDED PURPOSE WITHOUT THE EXPRESS WRITTEN CONSENT OF CRANE CO. ALL OF WHOSE RIGHTS ARE HEREIN RESERVED.

SCALE	DRAWN	DATE	CHK'D	FIRST USED ON	APP'D	SIZE	NUMBER	CHG/LTR
	WTM	6-14-77	WTM	1132-77		G	179522	A
							SHEET 3 OF 3	

DISCIPLINE COMMENTS DUE BY

REV.	DATE	BY	APP	DESCRIPTION
1	8/1/03			EBASCO REVISION

1364-3630 R

CAROLINA POWER & LIGHT COMPANY
SHEARON HARRIS NUCLEAR POWER PLANT
3000 MWe - UNITS 1-4 - 1984-1990

SEE REVISION BLOCK ABOVE

EBASCO SERVICES INCORPORATED

DUKE ENERGY

Facility Code :	HNP
Applicable Facilities :	HNP
Document Number :	1364-097532
Document Revision Number :	005
Document EC Number :	
Change Reason :	EC0000409949
Document Title :	FILTRATION SYSTEM P&ID

Pearson, Drew	PREPARER	4/5/2018
Hughes, Daryl W	APPROVER	4/5/2018

Notes :

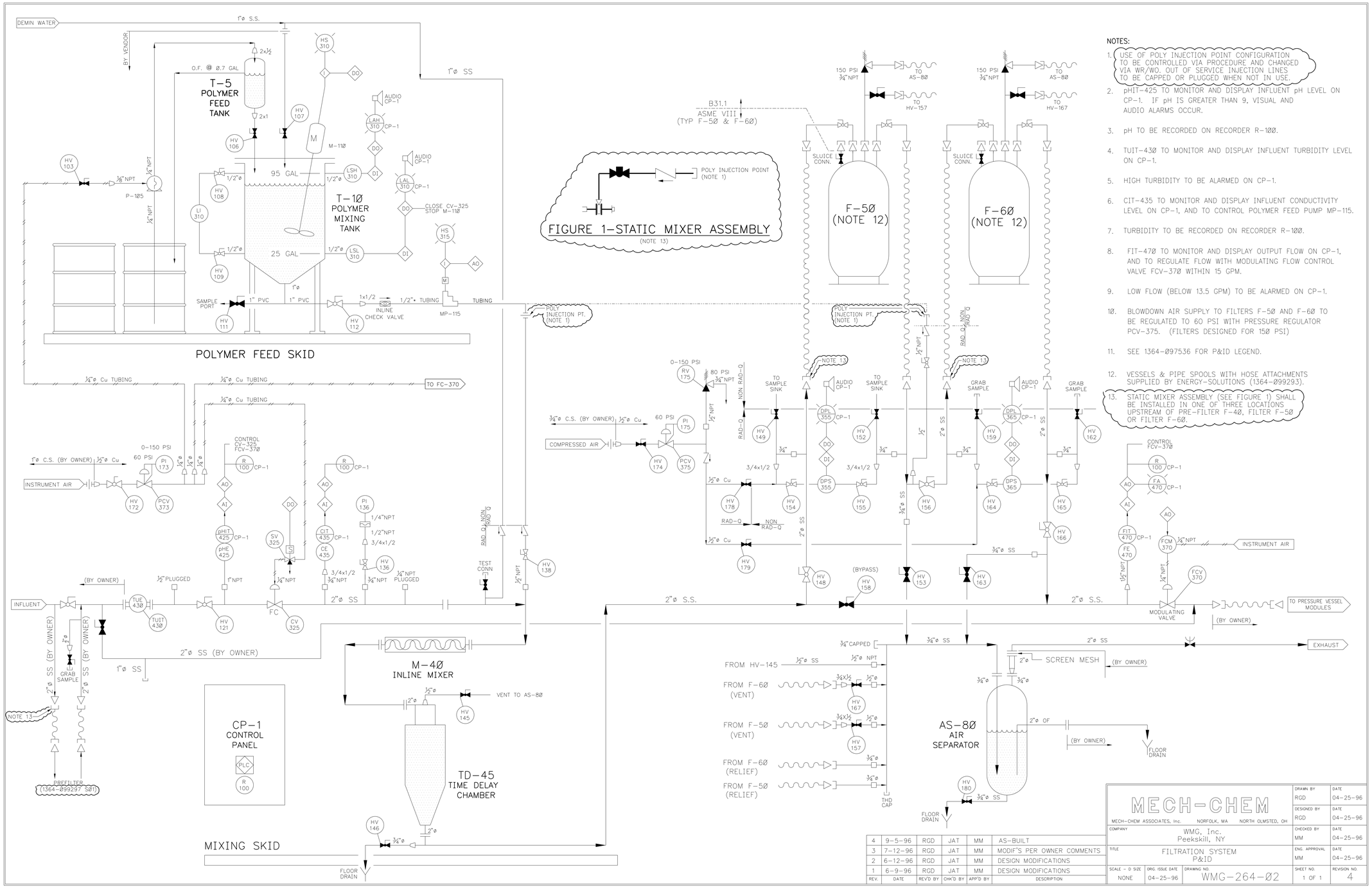

NOTES:

1. USE OF POLY INJECTION POINT CONFIGURATION TO BE CONTROLLED VIA PROCEDURE AND CHANGED VIA WR/WO. OUT OF SERVICE INJECTION LINES TO BE CAPPED OR PLUGGED WHEN NOT IN USE.
2. pHIT-425 TO MONITOR AND DISPLAY INFLUENT pH LEVEL ON CP-1. IF pH IS GREATER THAN 9, VISUAL AND AUDIO ALARMS OCCUR.
3. pH TO BE RECORDED ON RECORDER R-100.
4. TUIT-430 TO MONITOR AND DISPLAY INFLUENT TURBIDITY LEVEL ON CP-1.
5. HIGH TURBIDITY TO BE ALARMED ON CP-1.
6. CIT-435 TO MONITOR AND DISPLAY INFLUENT CONDUCTIVITY LEVEL ON CP-1, AND TO CONTROL POLYMER FEED PUMP MP-115.
7. TURBIDITY TO BE RECORDED ON RECORDER R-100.
8. FIT-470 TO MONITOR AND DISPLAY OUTPUT FLOW ON CP-1, AND TO REGULATE FLOW WITH MODULATING FLOW CONTROL VALVE FCV-370 WITHIN 15 GPM.
9. LOW FLOW (BELOW 13.5 GPM) TO BE ALARMED ON CP-1.
10. BLOWDOWN AIR SUPPLY TO FILTERS F-50 AND F-60 TO BE REGULATED TO 60 PSI WITH PRESSURE REGULATOR PCV-375. (FILTERS DESIGNED FOR 150 PSI)
11. SEE 1364-097536 FOR P&ID LEGEND.
12. VESSELS & PIPE SPOOLS WITH HOSE ATTACHMENTS SUPPLIED BY ENERGY-SOLUTIONS (1364-099293).
13. STATIC MIXER ASSEMBLY (SEE FIGURE 1) SHALL BE INSTALLED IN ONE OF THREE LOCATIONS UPSTREAM OF PRE-FILTER F-40, FILTER F-50 OR FILTER F-60.

REV.	DATE	REV'D BY	CHK'D BY	APP'D BY	DESCRIPTION
4	9-5-96	RGD	JAT	MM	AS-BUILT
3	7-12-96	RGD	JAT	MM	MODIF'S PER OWNER COMMENTS
2	6-12-96	RGD	JAT	MM	DESIGN MODIFICATIONS
1	6-9-96	RGD	JAT	MM	DESIGN MODIFICATIONS

MECH-CHEM
MECH-CHEM ASSOCIATES, Inc. NORFOLK, MA NORTH OLMSTED, OH

COMPANY: WMG, Inc. Peekskill, NY		DRAWN BY: RGD	DATE: 04-25-96
		DESIGNED BY: RGD	DATE: 04-25-96
		CHECKED BY: MM	DATE: 04-25-96
TITLE: FILTRATION SYSTEM P&ID		ENG. APPROVAL: MM	DATE: 04-25-96
SCALE - D SIZE: NONE	ORIG. ISSUE DATE: 04-25-96	DRAWING NO.: WMG-264-02	SHEET NO.: 1 OF 1 / REVISION NO.: 4

REV.	DATE	DESCRIPTION	DWN	CHK	APPR'D
5		INCORPORATED: EC 409949 (B1,D4-D7,E4,E5,F7)	ELECTRONICALLY SIGNED		
4		INCORPORATED: EC 400448 (D4-F7, C1, B5)	ELECTRONICALLY SIGNED		
3	1/28/99	INCORPORATED: ESR-950565 (R/4) (C6-D6)	ARM	RPP	DLS

PROFESSIONAL ENGINEER:

QUALITY LEVEL: RADWASTE Q

DUKE ENERGY
NUCLEAR ENGINEERING DEPARTMENT

PLANT: HARRIS PROJECT - UNIT 1 SCALE: NONE

TITLE:

FILTRATION SYSTEM P&ID

PLANT DWG NO.: 1364-097532

DUKE ENERGY

Facility Code :	HNP
Applicable Facilities :	HNP
Document Number :	1364-093034
Document Revision Number :	004
Document EC Number :	
Change Reason :	EC0000402153
Document Title :	ASSEMBLY LONGITUDINAL SECTION THRU TURBINE NSSS TURBINE

Boudreaux, Sheryl S.	PREPARER	6/26/2018
Barfield, Alfred L.	APPROVER	6/26/2018

Notes :

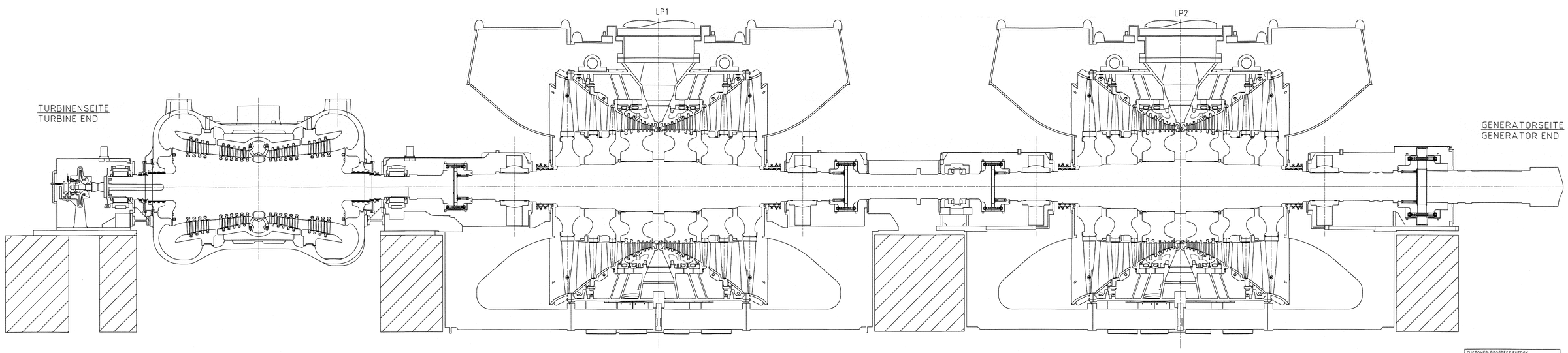

CUSTOMER: PROGRESS ENERGY

STATION: HARRIS

UNIT NO: 01

SERIAL NO: 13A4681-1

ORDER NO: 12959

US and EU Export Controls
Siemens AG

THIS DRAWING REPLACES THE ORIGINAL DRAWING 771J185 AND DSPPG-0162233

ANY INFORMATION GIVEN IN THIS DOCUMENT IS PROPERTY OF SIEMENS ENERGY. SEMIANNUAL REPRODUCTION, INCORPORATION AND/OR EDITING OF THIS DOCUMENT AS WELL AS UTILIZATION OF ITS CONTENTS ARE PROHIBITED. IN CASE OF ISSUE OF A PATENT OR ENTRY OF A UTILITY MODEL OR DESIGN PROMOTED, OFFENDERS WILL BE HELD LIABLE FOR PAYMENT OF DAMAGES. ALL RIGHTS CREATED BY ISSUE OF A PATENT OR REGISTRATION OF A UTILITY MODEL OR DESIGN PATENT ARE RESERVED

WEIGHT:	SCALE: 1:15	SPEC/	KUN 351103
ORIGINATED: 2013-09-27 FRITMA	TITLE: LONGITUDINAL SECTION		
CHECKED: 2013-10-03 VIKAS			
RELEASED: 2013-10-03 SARAR	Längsschnitt		
COPYRIGHT (C) Siemens AG ALL RIGHTS RESERVED	LANG.-DRAWING NO. / VALUE DPPPG-60009152 12959-0020000	REV. / SHEET: 1 / 1	

REV	DESCRIPTION	APPROVED
4	INCORPORATED: EC 402153	ELECTRONICALLY SIGNED

DUKE ENERGY

QUALITY LEVEL: NON-SAFETY RELATED

PLANT: HARRIS PROJECT - UNIT 1 SCALE: N/A

TITLE: ASSEMBLY LONGITUDINAL SECTION THRU TURBINE NSSS TURBINE

PLANT DWG. NO.: 1364-093034