DUKE ENERGY

Facility Code :	HNP
Applicable Facilities :	HNP
Document Number :	5-G-0805
Document Revision Number :	039
Document EC Number :	
Change Reason :	EC0000407698
Document Title :	FLOW DIAGRAM CHEMICAL & VOLUME CONTROL SYSTEM UNIT1

Pearson, Drew	PREPARER	4/12/2017
Almond, Erv	APPROVER	4/12/2017

Notes :

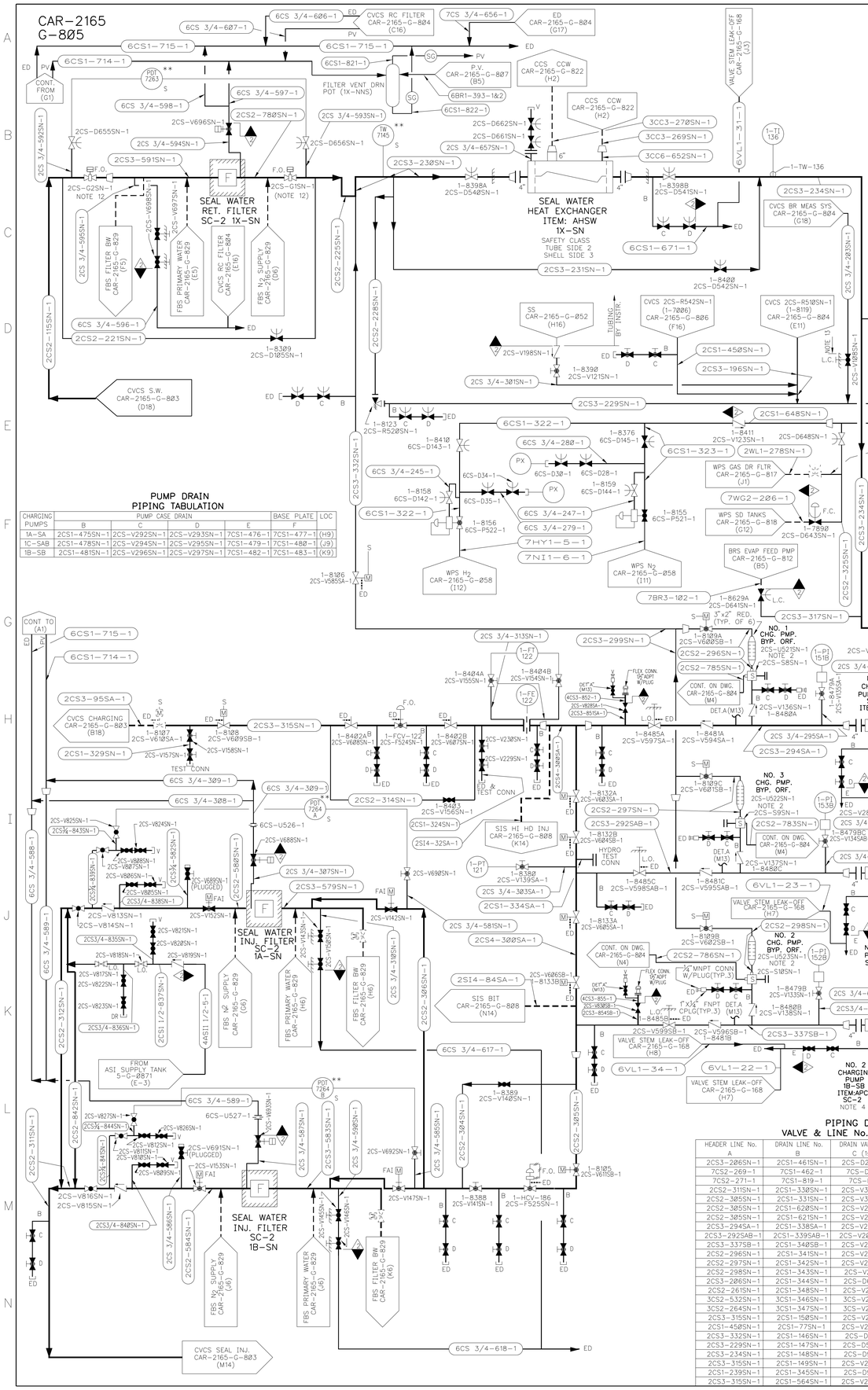

NOTES:

1. LOCATE CHECK VALVE BELOW VCT.
2. PROVIDE MIN. OF 5 FT. STRAIGHT RUN AFTER MINI-FLOW ORIFICE. MINI-FLOW ORIFICE SUPPLIED BY PUMP MANUFACTURER.
3. ALL (W) ITEM NO. ON THIS DWG. ARE SHOWN WITHOUT PREFIX COLCS.
4. SW REQUIRED FOR PUMP OIL COOLERS.
5. TEMPORARY STRAINER IS PLACED IN TEE DURING INITIAL FLUSHING OPERATIONS. STRAINER MUST BE REMOVED BEFORE PLANT START-UP.
6. PIPE MUST BE AT LEAST 3" LONG FROM WELD OF FLG. TO EDGE OF VALVE.
7. MULTIPLE LOOP POWER SUPPLY (CABINET MTD.) NOT SHOWN.
8. MULTIPLE LOOP POWER SUPPLY (CONTROL BOARD MTD.) NOT SHOWN.
9. PIPING FROM THE BLENDER TO THE CHARGING PUMP SUCTION HEADER SHALL NOT EXCEED 50 FT. IN TOTAL LENGTH.
10. ALL INSTRUMENTS ARE SUPPLIED BY (W) EXCEPT THOSE INDICATED WITH **.
11. FLANGED CONNECTIONS FOR HYDROSTATIC TEST.
12. VALVE FAILS OPEN ON POWER FAILURE ONLY.
13. THE BORON MONITOR SYSTEM IS ABANDONED IN PLACE.
14. THIS DRAWING IS A REPRODUCTION OF THE CORRESPONDING WESTINGHOUSE DRAWING.

WEST. DWG. NO. 114E266-SH. 3 OF 4 SUB. 4
(EBASCO FILE NO. 1364-14 REV. 5)

DRAWING HAS BEEN ALTERED, AS NECESSARY, FOR THE SHEARON HARRIS NUCLEAR POWER PLANT.

PUMP DRAIN PIPING TABULATION

CHARGING PUMPS	PUMP CASE DRAIN B	C	D	E	BASE PLATE F	LOC
1A-SA	2CS1-475SN-1	2CS-V292SN-1	2CS-V293SN-1	7CS1-476-1	7CS1-477-1	(H9)
1C-SAB	2CS1-478SN-1	2CS-V294SN-1	2CS-V295SN-1	7CS1-479-1	7CS1-480-1	(J9)
1B-SB	2CS1-481SN-1	2CS-V296SN-1	2CS-V297SN-1	7CS1-482-1	7CS1-483-1	(K9)

PIPING DRAIN VALVE & LINE No. TABULATION

HEADER LINE No. A	DRAIN LINE No. B	DRAIN VALVE No. C (1st.)	DRAIN VALVE No. D (2nd.)	LOCATION
2CS3-206SN-1	2CS1-461SN-1	2CS-D273SN-1	2CS-D274SN-1	(D15)
7CS2-269-1	7CS1-462-1	7CS-D275-1	7CS-D276-1	(H13)
7CS2-271-1	7CS1-819-1	7CS-D711-1	7CS-D712-1	(H12)
2CS2-311SN-1	2CS1-339SN-1	2CS-V302SN-1	2CS-V303SN-1	(M1)
2CS2-305SN-1	2CS1-331SN-1	2CS-V304SN-1	2CS-V305SN-1	(M3)
2CS2-305SN-1	2CS1-620SN-1	2CS-V282SN-1	2CS-V283SN-1	(M4)
2CS2-305SN-1	2CS1-621SN-1	2CS-V284SN-1	2CS-V285SN-1	(M3)
2CS3-294SA-1	2CS1-338SA-1	2CS-V202SA-1	2CS-V202SA-1	(H6)
2CS3-292SAB-1	2CS1-339SAB-1	2CS-V203SAB-1	2CS-V204SAB-1	(J6)
2CS3-337SB-1	2CS1-340SB-1	2CS-V285SB-1	2CS-V286SB-1	(K6)
2CS2-296SN-1	2CS1-341SN-1	2CS-V287SN-1	2CS-V288SN-1	(H8)
2CS2-297SN-1	2CS1-342SN-1	2CS-V289SN-1	2CS-V290SN-1	(J8)
2CS2-298SN-1	2CS1-343SN-1	2CS-V211SN-1	2CS-V212SN-1	(K8)
2CS3-206SN-1	2CS1-344SN-1	2CS-D63SN-1	2CS-D64SN-1	(D13)
2CS2-261SN-1	2CS1-348SN-1	2CS-V213SN-1	2CS-V214SN-1	(J17)
2CS2-532SN-1	2CS1-346SN-1	3CS-V215SN-1	3CS-V216SN-1	(J16)
3CS2-264SN-1	3CS1-347SN-1	3CS-V217SN-1	3CS-V218SN-1	(J14)
2CS3-315SN-1	2CS1-150SN-1	2CS-V219SN-1	2CS-V220SN-1	(H4)
2CS1-450SN-1	2CS1-775SN-1	2CS-V249SN-1	2CS-V250SN-1	(D7)
2CS3-332SN-1	2CS1-146SN-1	2CS-D91SN-1	2CS-D92SN-1	(D3)
2CS3-229SN-1	2CS1-147SN-1	2CS-D51SN-1	2CS-D51SN-1	(E4)
2CS3-234SN-1	2CS1-148SN-1	2CS-D93SN-1	2CS-D94SN-1	(C7)
2CS3-315SN-1	2CS1-149SN-1	2CS-V253SN-1	2CS-V254SN-1	(H3)
2CS1-239SN-1	2CS1-345SN-1	2CS-D95SN-1	2CS-D96SN-1	(C10)
2CS3-315SN-1	2CS1-564SN-1	2CS-V280SN-1	2CS-V281SN-1	(H6)

HEADER LINE No. G	VENT LINE No. H	INBOARD VALVE No.	OUTBOARD VALVE No. K	DRAWING LOCATION
2CS4-333SN-1	2CS½-824SN-1	2CS-V783SN-1	2CS-V784SN-1	(G11)
2CS6-285SA-1	2CS½-825SA-1	2CS-V785SA-1	2CS-V786SA-1	(H10)
2CS3-294SA-1	2CS½-826SA-1	2CS-V787SA-1	2CS-V788SA-1	(H7)
4CS3-852-1	4CS½-853-1	4CS-V829-1	N/A	(H6)
2CS6-290SB-1	2CS½-827SB-1	2CS-V789SB-1	2CS-V790SB-1	(K10)
4CS3-855-1	4CS½-856-1	4CS-V831-1	N/A	(K6)
2CS3-337SB-1	2CS½-828SB-1	2CS-V791SB-1	2CS-V792SB-1	(K7)
2CS6-288SAB-1	2CS½-829SAB-1	2CS-V793SAB-1	2CS-V794SAB-1	(J10)
2CS3-292SAB-1	2CS½-830SAB-1	2CS-V795SAB-1	2CS-V796SAB-1	(J7)
2CS8-321SA-1	2CS½-831SA-1	2CS-V797SA-1	2CS-V798SA-1	(J12)
2CS8-327SA-1	2CS½-832SA-1	2CS-V799SA-1	2CS-V800SA-1	(J13)
2CS8-320SB-1	2CS½-833SB-1	2CS-V801SB-1	2CS-V802SB-1	(K12)
(DOWNSTREAM OF CHECK VALVE 2CS-V779SB-1)				
2CS8-320SB-1	2CS½-834SB-1	2CS-V803SB-1	2CS-V804SB-1	(K13)
(UPSTREAM OF CHECK VALVE 2CS-V779SB-1)				

REFERENCE DRAWINGS

FLOW DIAGRAM LEGEND — CAR-2165-G-041
VALVE STEM LEAK-OFF — CAR-2165-G-168

REV	DESCRIPTION	APPROVED
39	INCORPORATED: EC 407698 (C17-C19)	ELECTRONICALLY SIGNED
38	INCORPORATED: EC 406318 (G1-G5,H1,H2,H5,I4)	ELECTRONICALLY SIGNED
37	INCORPORATED: EC 98903 (G6,G9,M13-M16), EC 98904 (J6,K6,N13-N16), EC 98905 (I9); & EC 91684 (H13)	ELECTRONICALLY SIGNED
36	INCORPORATED: EC 85441 (M1,M2)	ELECTRONICALLY SIGNED
35	INCORPORATED: EC 85439 (I1)	ELECTRONICALLY SIGNED

THIS DRAWING HAS BEEN PRODUCED AND IS CONTROLLED ON THE NED CAD/E SYSTEM. ANY REVISIONS TO THIS DOCUMENT SHOULD BE DONE USING THE CAD/E SYSTEM TO ASSURE PROPER CONTROL OF THE ELECTRONIC DRAWING DATABASE.

NUCLEAR SAFETY RELATED (Q-LIST)
YES ■ NO □ PARTIAL ■ F.P.-Q □ R.W.-Q □

DUKE ENERGY
NUCLEAR ENGINEERING DEPARTMENT – RALEIGH, N.C.

PLANT: HARRIS NUCLEAR PROJECT – UNIT 1 | SCALE: NONE

TITLE: FLOW DIAGRAM
CHEMICAL & VOLUME CONTROL SYSTEM
UNIT 1

DWG NO. CAR-2165 G-0805

Facility Code :	HNP
Applicable Facilities :	HNP
Document Number :	5-G-0817
Document Revision Number :	028
Document EC Number :	
Change Reason :	EC0000407600
Document Title :	WASTE PROCESSING SYSTEM GAS DECAY STORAGE UNIT 1

Pearson, Drew	PREPARER	1/22/2018
Fletcher, Clyde R.	APPROVER	1/22/2018

Notes :

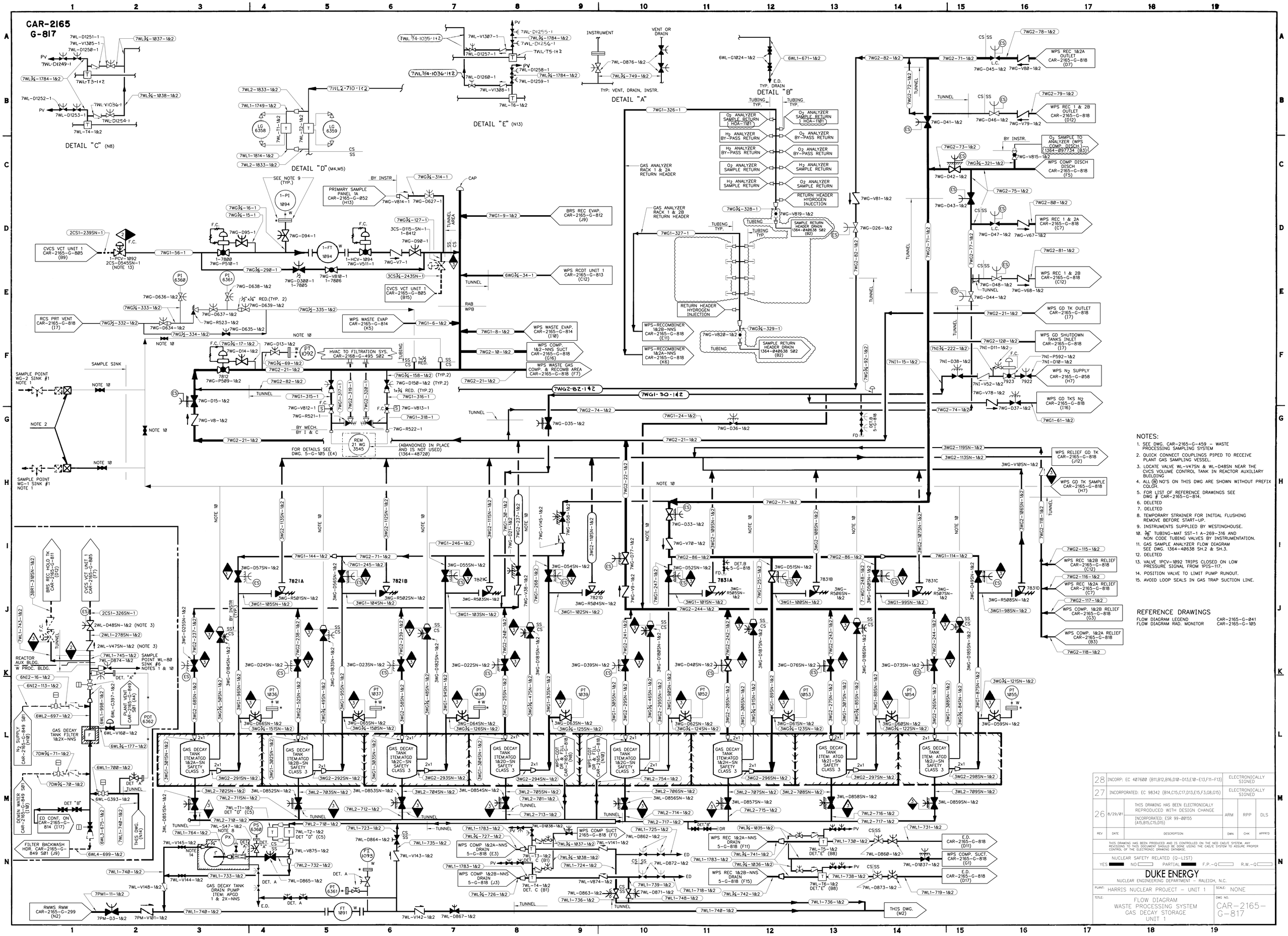

NOTES:

1. SEE DWG. CAR-2165-G-459 – WASTE PROCESSING SAMPLING SYSTEM
2. QUICK CONNECT COUPLINGS PIPED TO RECEIVE PLANT GAS SAMPLING VESSEL.
3. LOCATE VALVE WL-V47SN & WL-D48SN NEAR THE CVCS VOLUME CONTROL TANK IN REACTOR AUXILIARY BUILDING
4. ALL (W) NO'S ON THIS DWG ARE SHOWN WITHOUT PREFIX COLGH.
5. FOR LIST OF REFERENCE DRAWINGS SEE DWG # CAR-2165-G-814.
6. DELETED
7. DELETED
8. TEMPORARY STRAINER FOR INITIAL FLUSHING REMOVE BEFORE START-UP.
9. INSTRUMENTS SUPPLIED BY WESTINGHOUSE.
10. 3/8" TUBING-MAT SST-1 A-269-316 AND NON CODE TUBING VALVES BY INSTRUMENTATION.
11. GAS SAMPLE ANALYZER FLOW DIAGRAM SEE DWG. 1364-40638 SH.2 & SH.3.
12. DELETED
13. VALVE 1PCV-1092 TRIPS CLOSED ON LOW PRESSURE SIGNAL FROM 1PIS-117.
14. POSITION VALVE TO LIMIT PUMP RUNOUT.
15. AVOID LOOP SEALS IN GAS TRAP SUCTION LINE.

REFERENCE DRAWINGS

FLOW DIAGRAM LEGEND	CAR-2165-G-041
FLOW DIAGRAM RAD. MONITOR	CAR-2165-G-105

REV	DATE	DESCRIPTION	DWN	CHK	APPR'D
28		INCORP: EC 407600 (B11,B12,B16,D10-D13,E10-E13,F11-F13)	ELECTRONICALLY SIGNED		
27		INCORPORATED: EC 98342 (B14,C15,C17,D13,E15,F3,G8,G15)	ELECTRONICALLY SIGNED		
26	8/29/01	THIS DRAWING HAS BEEN ELECTRONICALLY REPRODUCED WITH DESIGN CHANGE INCORPORATED: ESR 99-00155 (A15,B15,C15,D15)	ARM	RPP	DLS

THIS DRAWING HAS BEEN PRODUCED AND IS CONTROLLED ON THE NED CAD/E SYSTEM. ANY REVISIONS TO THIS DOCUMENT SHOULD BE DONE USING THE CAD/E SYSTEM TO ASSURE PROPER CONTROL OF THE ELECTRONIC DRAWING DATABASE.

NUCLEAR SAFETY RELATED (Q-LIST)
YES ■ NO □ PARTIAL ■ F.P.-Q □ R.W.-Q □

DUKE ENERGY
NUCLEAR ENGINEERING DEPARTMENT – RALEIGH, N.C.

PLANT: HARRIS NUCLEAR PROJECT – UNIT 1
SCALE: NONE
TITLE: FLOW DIAGRAM WASTE PROCESSING SYSTEM GAS DECAY STORAGE UNIT 1
DWG NO. CAR-2165-G-817

DUKE ENERGY

Facility Code :	HNP
Applicable Facilities :	HNP
Document Number :	5-G-0818
Document Revision Number :	026
Document EC Number :	
Change Reason :	EC0000407600;EC0000407334;EC0000407335
Document Title :	WASTE PROCESSING SYSTEM WASTE GAS COMPR. AND RECOMBINER UNIT 1

Pearson, Drew	PREPARER	1/9/2018
Pitser, Kenneth N.	APPROVER	1/9/2018
Fletcher, Clyde R.	APPROVER	1/9/2018

Notes :

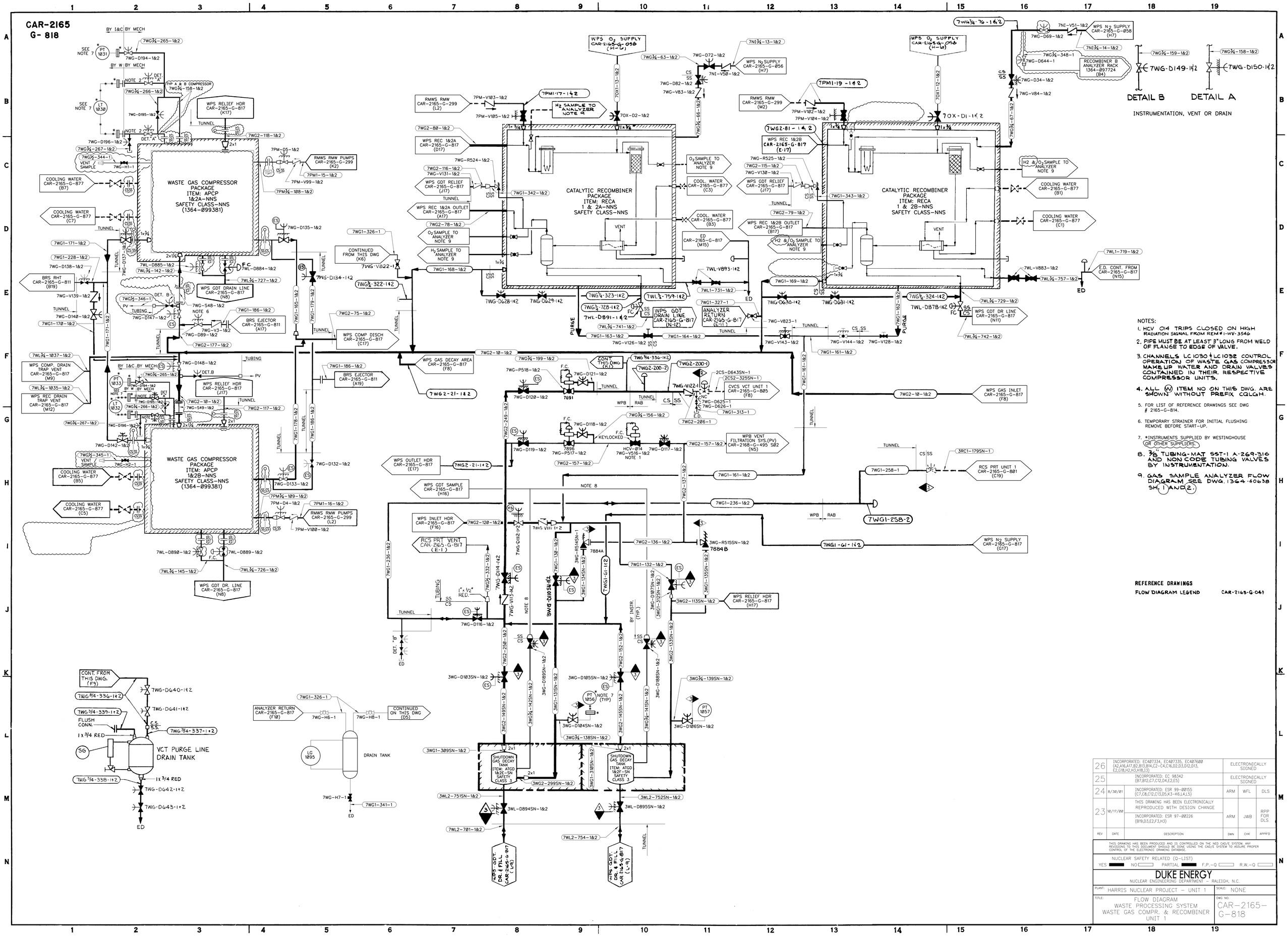
CAR-2165
G- 818
WASTE GAS COMPRESSOR PACKAGE ITEM: APCP 1&2A-NNS SAFETY CLASS-NNS (1364-099381)
WASTE GAS COMPRESSOR PACKAGE ITEM: APCP 1&2B-NNS SAFETY CLASS-NNS (1364-099381)
CATALYTIC RECOMBINER PACKAGE ITEM: RECA 1 & 2A-NNS SAFETY CLASS-NNS
CATALYTIC RECOMBINER PACKAGE ITEM: RECA 1 & 2B-NNS SAFETY CLASS-NNS
WPS O2 SUPPLY CAR-2165-G-058 (H-L)
WPS N2 SUPPLY CAR-2165-G-058 (H7)
WPS N2 SUPPLY CAR-2165-G-056 (H7)
RECOMBINER B ANALYZER RACK 1364-097724 (B4)
DETAIL B
DETAIL A
INSTRUMENTATION, VENT OR DRAIN
RMWS RMW CAR-2165-G-299 (L2)
RMWS RMW CAR-2165-G-299 (M2)
RMWS RMW PUMPS CAR-2165-G-299 (K2)
WPS REC 1&2A CAR-2165-G-817 (D17)
WPS REC 1&2B CAR-2165-G-817 (E-17)
WPS GDT RELIEF CAR-2165-G-817 (J17)
WPS REC 1&2A OUTLET CAR-2165-G-817 (A17)
WPS REC 1&2B OUTLET CAR-2165-G-817 (B17)
WPS GDT DRAIN LINE CAR-2165-G-817 (N8)
WPS GDT DRAIN LINE CAR-2165-G-817 (N-12)
WPS GDT DR LINE CAR-2165-G-817 (N11)
WPS GDT DR. LINE CAR-2165-G-817 (N8)
WPS COMP. DRAIN TRAP VENT CAR-2165-G-817 (M9)
WPS REC DRAIN TRAP VENT CAR-2165-G-817 (M12)
WPS RELIEF HDR CAR-2165-G-817 (K17)
WPS RELIEF HDR CAR-2165-G-817 (J17)
WPS RELIEF HDR CAR-2165-G-817 (H17)
WPS COMP DISCH CAR-2165-G-817 (C17)
WPS GAS DECAY AREA CAR-2165-G-817 (F8)
WPS GAS INLET CAR-2165-G-817 (F8)
WPS OUTLET HDR CAR-2165-G-817 (E17)
WPS GDT SAMPLE CAR-2165-G-817 (H16)
WPS INLET HDR CAR-2165-G-817 (F16)
RCS PRT VENT CAR-2165-G-817 (E-1)
WPS N2 SUPPLY CAR-2165-G-817 (G17)
WPB VENT FILTRATION SYS.(PV) CAR-2168-G-495 S02 (N5)
RCS PRT UNIT 1 CAR-2165-G-801 (C19)
CVCS VCT UNIT 1 CAR-2165-G-805 (F8)
E.D. CONT. FROM CAR-2165-G-817 (N15)
CONTINUED FROM THIS DWG (K6)
CONTINUED ON THIS DWG (D5)
CONT. FROM THIS DWG. (F9)
CONT. FROM THIS DWG (K1)
ANALYZER RETURN CAR-2165-G-817 (F10)
ANALYZER RETURN CAR-2165-G-817 (G11)
VCT PURGE LINE DRAIN TANK
DRAIN TANK
SHUTDOWN GAS DECAY TANK ITEM: ATGD 1&2E-SN SAFETY CLASS 3
SHUTDOWN GAS DECAY TANK ITEM: ATGD 1&2F-SN SAFETY CLASS 3
WPS GDT DR. & FILL CAR-2165-G-817 (L-9)
NOTES:
1. HCV 014 TRIPS CLOSED ON HIGH RADIATION SIGNAL FROM REM#1-RV-3546
2. PIPE MUST BE AT LEAST 3" LONG FROM WELD OF FLANGE TO EDGE OF VALVE.
3. CHANNELS LC 1030 & LC 1032 CONTROL OPERATION OF WASTE GAS COMPRESSOR MAKEUP WATER AND DRAIN VALVES CONTAINED IN THEIR RESPECTIVE COMPRESSOR UNITS.
4. ALL (N) ITEM NO ON THIS DWG. ARE SHOWN WITHOUT PREFIX CQLGH.
5. FOR LIST OF REFERENCE DRAWINGS SEE DWG # 2165-G-814.
6. TEMPORARY STRAINER FOR INITIAL FLUSHING REMOVE BEFORE START-UP.
7. *INSTRUMENTS SUPPLIED BY WESTINGHOUSE OR OTHER SUPPLIERS.
8. 3/8" TUBING-MAT SST-1 A-269-316 AND NON CODE TUBING VALVES BY INSTRUMENTATION.
9. GAS SAMPLE ANALYZER FLOW DIAGRAM SEE DWG. 1364-40638 SH. 1 AND 2.
REFERENCE DRAWINGS
FLOW DIAGRAM LEGEND CAR-2165-G-041
26 INCORPORATED: EC407334, EC407335, EC407600 (A2,A16,A17,B2,B13,B14,C2-C4,C16,D2,D3,D12,D13, E2,C18,H2,H3,H18,I3) ELECTRONICALLY SIGNED
25 INCORPORATED: EC 98342 (B7,B12,C7,C12,D4,E2,E5) ELECTRONICALLY SIGNED
24 8/30/01 INCORPORATED: ESR 99-00155 (C7,C8,C12,C13,D5,K3-K6,L4,L5) ARM WFL DLS
23 10/17/00 THIS DRAWING HAS BEEN ELECTRONICALLY REPRODUCED WITH DESIGN CHANGE
INCORPORATED: ESR 97-00226 (B19,D3,E2,F3,H3) ARM JWB RPP FOR DLS
REV DATE DESCRIPTION DWN CHK APPR'D
THIS DRAWING HAS BEEN PRODUCED AND IS CONTROLLED ON THE NED CAD/E SYSTEM. ANY REVISIONS TO THIS DOCUMENT SHOULD BE DONE USING THE CAD/E SYSTEM TO ASSURE PROPER CONTROL OF THE ELECTRONIC DRAWING DATABASE.
NUCLEAR SAFETY RELATED (Q-LIST)
YES NO PARTIAL F.P.-Q R.W.-Q
DUKE ENERGY
NUCLEAR ENGINEERING DEPARTMENT - RALEIGH, N.C.
PLANT: HARRIS NUCLEAR PROJECT - UNIT 1
SCALE: NONE
TITLE: FLOW DIAGRAM WASTE PROCESSING SYSTEM WASTE GAS COMPR. & RECOMBINER UNIT 1
DWG NO. CAR-2165-G-818

Facility Code :	HNP
Applicable Facilities :	HNP
Document Number :	5-G-0819
Document Revision Number :	028
Document EC Number :	
Change Reason :	EC0000413475
Document Title :	FLOW DIAG COMPONENT COOLING WTR SYS SH1

Mehta, Ameeta	Preparer	9/13/2018
Almond, Erv	Approver	9/13/2018

Notes :

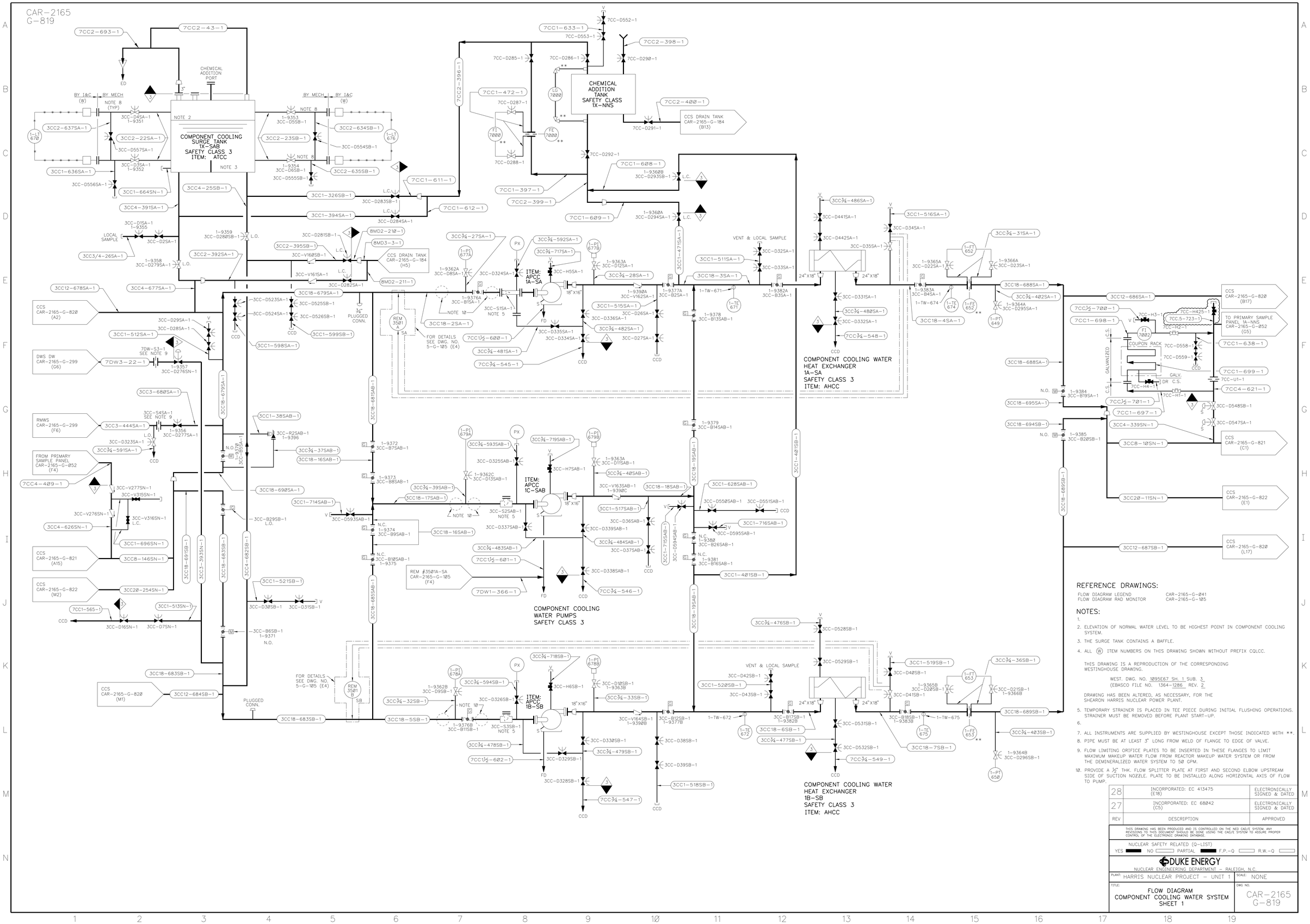

REFERENCE DRAWINGS:

FLOW DIAGRAM LEGEND	CAR-2165-G-041
FLOW DIAGRAM RAD MONITOR	CAR-2165-G-105

NOTES:

1.
2. ELEVATION OF NORMAL WATER LEVEL TO BE HIGHEST POINT IN COMPONENT COOLING SYSTEM.
3. THE SURGE TANK CONTAINS A BAFFLE.
4. ALL (W) ITEM NUMBERS ON THIS DRAWING SHOWN WITHOUT PREFIX CQLCC.

   THIS DRAWING IS A REPRODUCTION OF THE CORRESPONDING WESTINGHOUSE DRAWING.

   WEST. DWG. NO. 1095E67 SH. 1 SUB. 3
   (EBASCO FILE NO. 1364-1286 REV. 2

   DRAWING HAS BEEN ALTERED, AS NECESSARY, FOR THE SHEARON HARRIS NUCLEAR POWER PLANT.
5. TEMPORARY STRAINER IS PLACED IN TEE PIECE DURING INITIAL FLUSHING OPERATIONS. STRAINER MUST BE REMOVED BEFORE PLANT START-UP.
6.
7. ALL INSTRUMENTS ARE SUPPLIED BY WESTINGHOUSE EXCEPT THOSE INDICATED WITH **.
8. PIPE MUST BE AT LEAST 3" LONG FROM WELD OF FLANGE TO EDGE OF VALVE.
9. FLOW LIMITING ORIFICE PLATES TO BE INSERTED IN THESE FLANGES TO LIMIT MAXIMUM MAKEUP WATER FLOW FROM REACTOR MAKEUP WATER SYSTEM OR FROM THE DEMINERALIZED WATER SYSTEM TO 50 GPM.
10. PROVIDE A 3/8" THK. FLOW SPLITTER PLATE AT FIRST AND SECOND ELBOW UPSTREAM SIDE OF SUCTION NOZZLE. PLATE TO BE INSTALLED ALONG HORIZONTAL AXIS OF FLOW TO PUMP.

REV	DESCRIPTION	APPROVED
28	INCORPORATED: EC 413475 (E18)	ELECTRONICALLY SIGNED & DATED
27	INCORPORATED: EC 68042 (C5)	ELECTRONICALLY SIGNED & DATED

THIS DRAWING HAS BEEN PRODUCED AND IS CONTROLLED ON THE NED CAD/E SYSTEM. ANY REVISIONS TO THIS DOCUMENT SHOULD BE DONE USING THE CAD/E SYSTEM TO ASSURE PROPER CONTROL OF THE ELECTRONIC DRAWING DATABASE.

NUCLEAR SAFETY RELATED (Q-LIST)
YES ■ NO □ PARTIAL ■ F.P.-Q □ R.W.-Q □

DUKE ENERGY
NUCLEAR ENGINEERING DEPARTMENT – RALEIGH, N.C.

PLANT: HARRIS NUCLEAR PROJECT – UNIT 1 | SCALE: NONE

TITLE: FLOW DIAGRAM COMPONENT COOLING WATER SYSTEM SHEET 1

DWG NO. CAR-2165 G-819

CAD MEDIA

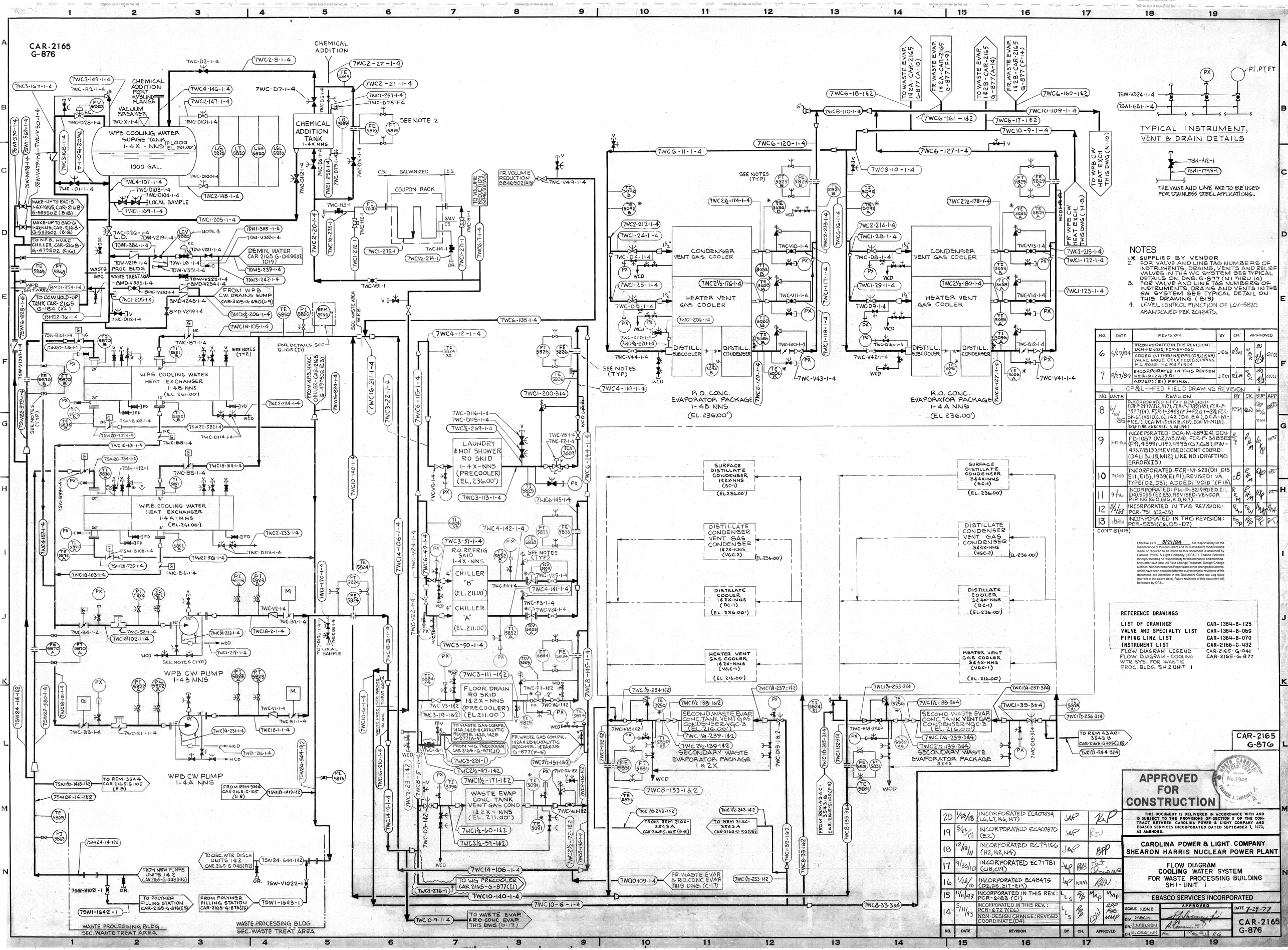

NOTES

1. * SUPPLIED BY VENDOR
2. FOR VALVE AND LINE TAG NUMBERS OF INSTRUMENTS, DRAINS, VENTS AND RELIEF VALVES IN THE WC SYSTEM SEE TYPICAL DETAILS ON DWG. G-877 (N1 THRU 14)
3. FOR VALVE AND LINE TAG NUMBERS OF INSTRUMENTS, DRAINS AND VENTS IN THE SW SYSTEM SEE TYPICAL DETAIL ON THIS DRAWING (B19)
4. LEVEL CONTROL FUNCTION OF LCV-5820 ABANDONED PER ELA8475.

NO.	DATE	REVISION	BY	CH.	APPROVED
6	6/27/84	INCORPORATED IN THIS REVISION: DCN-FC-1022; FCR-SP-060 ADDED: (N1 THRU N5) PPS. (D3, G8, K8) VALVE MODE DELETED: (J5) PIPING, R.C. ROSSI N.C. P.E. # 11504	JEM	RJM	
7	8/27/84	INCORPORATED IN THIS REVISION FCR-P-2419 R1 ADDED: (E1) PIPING.	JEM	RJM	
		CP&L-HPES FIELD DRAWING REVISION			
NO.	DATE	REVISION	BY	CK	SUP APP
8	6/10/85	INCORPORATED IN THIS REVISION: FCR-P-2479 (J12, K17), FCR-P-2785 (H8), FCR-P-3027 (D1), FCR-P-3483 (F7 + F9 & G7-G9), FCR-SP-60 (V10, D1), (L6), 142 (D6, E6), DCA-M-71 (E1), DCA-M-100 (K18, K19), DCA-M-74 (D1), DRAFTING ERRORS (L5, M1, N4)	RJM		
9	5-12-86	INCORPORATED: DCA-M-689 (E4), DCN-FD-1087 (M2, M3, M4), FCR-P-3483 (F9), 4599 (J19), 4993 (G7, G8), PW-4767 (B13); REVISED: CONT COORD: (D4, L13, L18, M12), LINE NO (DRAFTING ERRORS (I5)			
10	7-15-86	INCORPORATED: FCR-M-623 (D11, D15, E11, E15), 1939 (E1, F1); REVISED: VA. TYPE (D2, D3); ADDED: "VOID" (F18)			
11	9-1-86	INCORPORATED: PW-P-3219 R2 (E10, E11, E14), 5095 (E2, E3); REVISED: VENDOR PIPING (G10, G16, K10, N7)			
12	5/14/88	INCORPORATED IN THIS REVISION: PCR-751 (C2-C5)			
13	1/23/91	INCORPORATED IN THIS REVISION: PCR-5231 (C6, D5-D7)			

CONT @ (N15)

Effective as of 8/27/84 full responsibility for the maintenance of this document and for subsequent modifications made or required to be made to this document is assumed by Carolina Power & Light Company ("CP&L"). Ebasco Services Incorporated has no responsibility for maintenance and modifications after said date. All Field Change Requests, Design Change Notices, Nonconformance Reports and other change documents, which have been considered for the current or prior revisions of this document, are identified in the Document Close-out Log issue (current at the above date). Future revisions of this document will be issued by CP&L.

REFERENCE DRAWINGS

LIST OF DRAWINGS	CAR-1364-B-125
VALVE AND SPECIALTY LIST	CAR-1364-B-069
PIPING LINE LIST	CAR-1364-B-070
INSTRUMENT LIST	CAR-2166-B-432
FLOW DIAGRAM LEGEND	CAR-2165-G-041
FLOW DIAGRAM - COOLING WTR SYS. FOR WASTE PROC. BLDG. SH. 2 UNIT 1	CAR-2165-G-877

CAR-2165
G-876

NO.	DATE	REVISION	BY	CK	APPROVED
20	1/23/18	INCORPORATED EC407334 (L6, L7, N6, N7)	JAP		
19	5/12/17	INCORPORATED EC407870 (E2)	JAP	RJV	
18	12/18/11	INCORPORATED EC79156 (H2, N2, N4)	JAP	BPP	
17	9/30/10	INCORPORATED EC77781 (C18, C19)	JAP	RBS	
16	1/28/10	INCORPORATED EC48475 (D2, D3, E17-E19)	JAP	NAM	RJN
15	11/11/93	INCORPORATED IN THIS REV.: PCR-6183 (C1)	LS	RP	MMP MMP
14	5/11/93	INCORPORATED IN THIS REV.: PCR-6727 (E6) NON-DESIGN CHANGE: REVISED COORDINATE (D4)	LS	RP	RDP PDP MMP

APPROVED FOR CONSTRUCTION

NORTH CAROLINA REGISTERED PROFESSIONAL ENGINEER No. 1945 FRANKS J. SWEENEY, JR.

THIS DOCUMENT IS DELIVERED IN ACCORDANCE WITH AND IS SUBJECT TO THE PROVISIONS OF SECTION X OF THE CONTRACT BETWEEN CAROLINA POWER & LIGHT COMPANY AND EBASCO SERVICES INCORPORATED DATED SEPTEMBER 1, 1970, AS AMENDED.

CAROLINA POWER & LIGHT COMPANY
SHEARON HARRIS NUCLEAR POWER PLANT

FLOW DIAGRAM
COOLING WATER SYSTEM
FOR WASTE PROCESSING BUILDING
SH 1 - UNIT 1

EBASCO SERVICES INCORPORATED

SCALE NONE | APPROVED | DATE 7-29-77
DIV. MECH. | DR. J. NIELSEN | CH. S. CRACIUN
CAR-2165
G-876

DUKE ENERGY

Facility Code :	HNP
Applicable Facilities :	HNP
Document Number :	5-G-0877
Document Revision Number :	010
Document EC Number :	
Change Reason :	EC0000407334;EC0000407335
Document Title :	FLOW DIAG COOLING WATER SYS FOR WPB SH-2 UNIT 1

Pearson, Drew	PREPARER	1/9/2018
Pitser, Kenneth N.	APPROVER	1/9/2018

Notes :

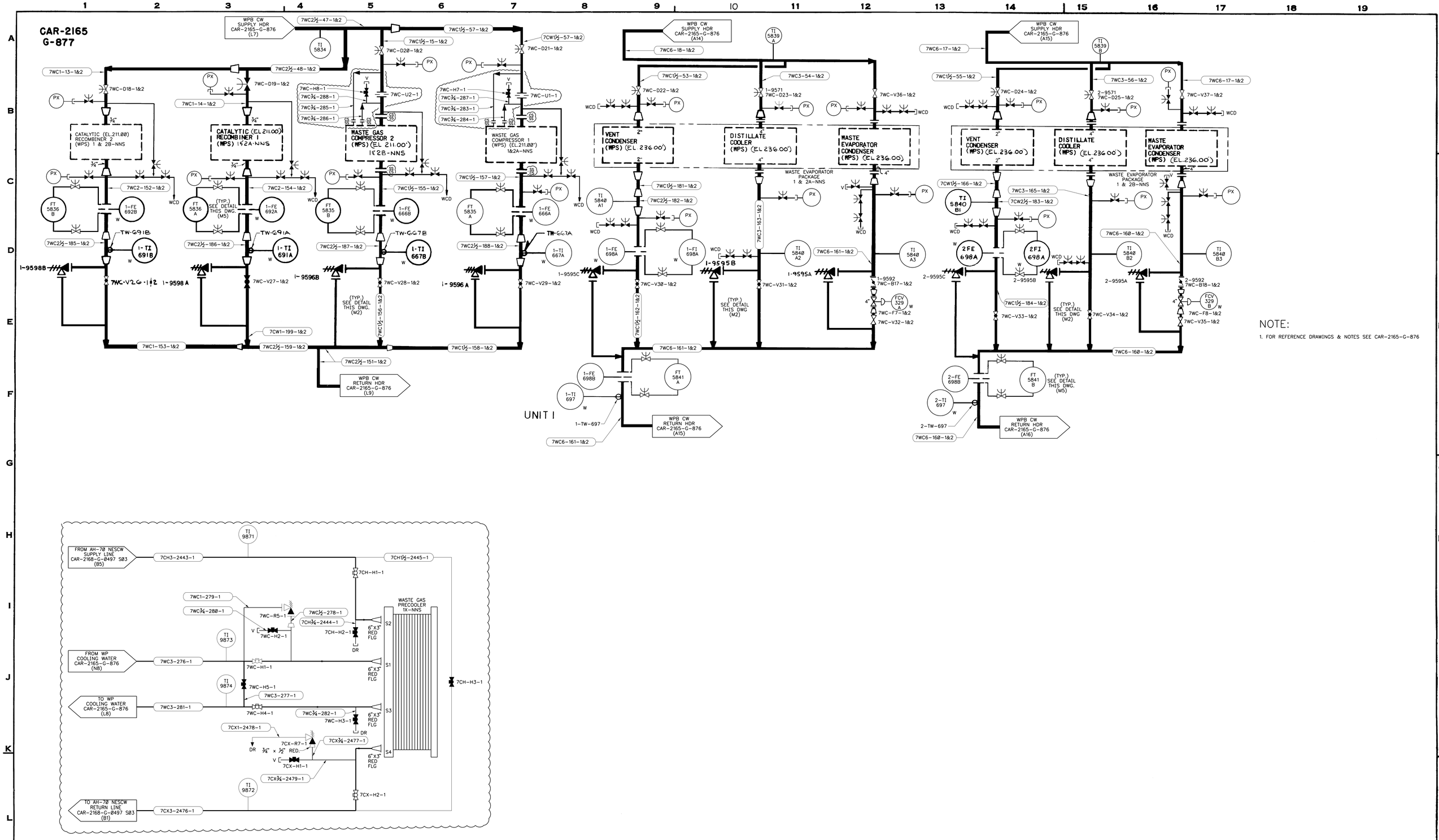

NOTE:

1. FOR REFERENCE DRAWINGS & NOTES SEE CAR-2165-G-876

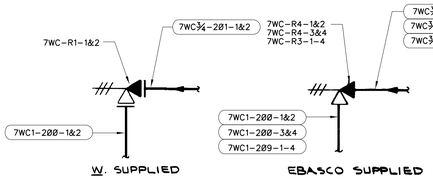

RELIEF VALVE DETAIL

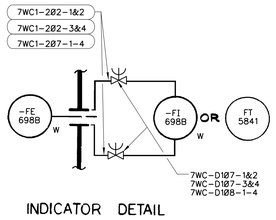

INDICATOR DETAIL

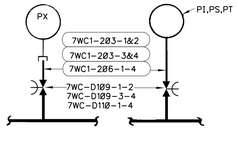

PRESSURE INSTRUMENT CONN. DETAIL

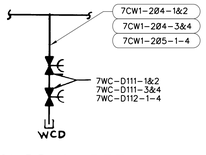

DRAIN CONN. DETAIL

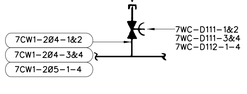

VENT CONN. DETAIL

REV	DATE	DESCRIPTION	DWN	CHK	APPR'D
10		INCORPORATED EC407334 & EC407335	ELECTRONICALLY SIGNED		
9	8/29/01	THIS DRAWING HAS BEEN ELECTRONICALLY REPRODUCED WITH DESIGN CHANGE	ARM	WFL	DLS
		INCORPORATED: ESR 99-00155 (A3,D3)			

THIS DRAWING HAS BEEN PRODUCED AND IS CONTROLLED ON THE NED CAD/E SYSTEM. ANY REVISIONS TO THIS DOCUMENT SHOULD BE DONE USING THE CAD/E SYSTEM TO ASSURE PROPER CONTROL OF THE ELECTRONIC DRAWING DATABASE.

NUCLEAR SAFETY RELATED (Q-LIST)
YES ☐ NO ■ PARTIAL ☐ F.P.-Q ☐ R.W.-Q ☐

DUKE ENERGY
NUCLEAR ENGINEERING DEPARTMENT – RALEIGH, N.C.

PLANT: HARRIS NUCLEAR PROJECT – UNIT 1
SCALE: NONE

TITLE: FLOW DIAGRAM
COOLING WATER SYSTEM
FOR WASTE PROCESSING BUILDING
SH 2 UNIT 1

DWG NO. CAR-2165-G-877

50H

SEE EXAMPLE BELOW

																		EXH IN 1AV-3	
1-1		2-1		3-1		4-1		5-1		6-1		7-1		8-1		9-1		10-1	3127
ISOL AV D24		ISOL AV D63		ISOL AV D16		ISOL AV D83		ISOL AV D18		ISOL AV D79		ISOL AV D36		ISOL AV D38		ISOL AV D87		AH-16 IN CZ D10	
1-2	3157	2-2	3162	3-2	3155	4-2	3164	5-2	3155	6-2	3164	7-2	3160	8-2	3160	9-2	3165	10-2	2823
ISOL AV D22		ISOL AV D71		ISOL AV D28		ISOL AV D75		ISOL AV D14		ISOL AV D53		ISOL AV D4		ISOL AV D8		ISOL AV D32			
1-3	3156	2-3	3163	3-3	3158	4-3	3163	5-3	3154	6-3	3161	7-3	3152	8-3	3153	9-3	3159	10-3	
ISOL AV D20		ISOL AV D67		ISOL AV D26		ISOL AV D59		ISOL AV D12		ISOL AV D34		ISOL AV D10		ISOL AV D6		ISOL AV D30			
1-4	3156	2-4	3162	3-4	3157	4-4	3161	5-4	3154	6-4	3159	7-4	3153	8-4	3152	9-4	3158	10-4	

EMERGENCY HVAC EXHAUST/ISOLATION DAMPERS-REACTOR AUXILIARY BUILDING | NON EMERGENCY

STATUS LIGHT BOX-8
TRAIN B

GREEN	RED
EXH AV D65	EXH AV D65

NOTE: POWER SUPPLY FOR SLB SHOWN ON SH 2823

RECEIVED
10-17-96
HNP
DOCUMENT CONTROL

DO NOT ENGRAVE

CWD SHEET NO.
WINDOW MATRIX LOCATION

EXAMPLE
ENGRAVING ON RED HALF OF WINDOW TO BE SAME AS SHOWN ON GREEN HALF OF WINDOW

Effective as of 8-7-84, full responsibility for the maintenance of this drawing and for subsequent modifications made or required to be made to this drawing is assumed by Carolina Power & Light Company ("CP&L"). Ebasco Services Incorporated has no responsibility for maintenance and modifications after said date. All Field Change Requests, Design Change Notices and Non-Conformance Reports, which have been considered for the current or prior revisions of this drawing, are identified on this drawing if applicable, or are identified in the Drawing Control Log issue (current at the above date) if not applicable. Future revisions of this drawing will be issued by CP&L.

NUCLEAR SAFETY RELATED

REV	DATE	BY	CK	APPROVED	REV	DATE	BY	APPROVED
8	4-2-96	JAP	ARM	TCN	LFC			
7	8-16-95	JAP	LC	LCM	LFC			
6	8-14-75	JAP	ARM	DS	LFC			
					9	10/17/96	JAP LC	JHP DLS

CP&L-HPES FIELD DWG REV

EBASCO SERVICES INCORPORATED
DIV. I & C DR. T.G.
CH. H. BRAUN
DATE JAN 14, 1980
APPROVED

CAROLINA POWER & LIGHT CO.
SHEARON HARRIS NUCLEAR P.P.
UNIT NO. 1
CONTROL WIRING DIAGRAM
AEP-1 STATUS LIGHT BOX SLB-8(GB) ENGRAVING

CAR 2166
B-401
SHEET 50H

DUKE ENERGY

Facility Code :	HNP
Applicable Facilities :	HNP
Document Number :	6-B-430 31.83
Document Revision Number :	008
Document EC Number :	
Change Reason :	EC0000293942
Document Title :	WATER CHILLER WC-2(1B-SB)

Pearson, Drew	PREPARER	5/25/2017
Zagami, Michael A	APPROVER	5/25/2017

Notes :

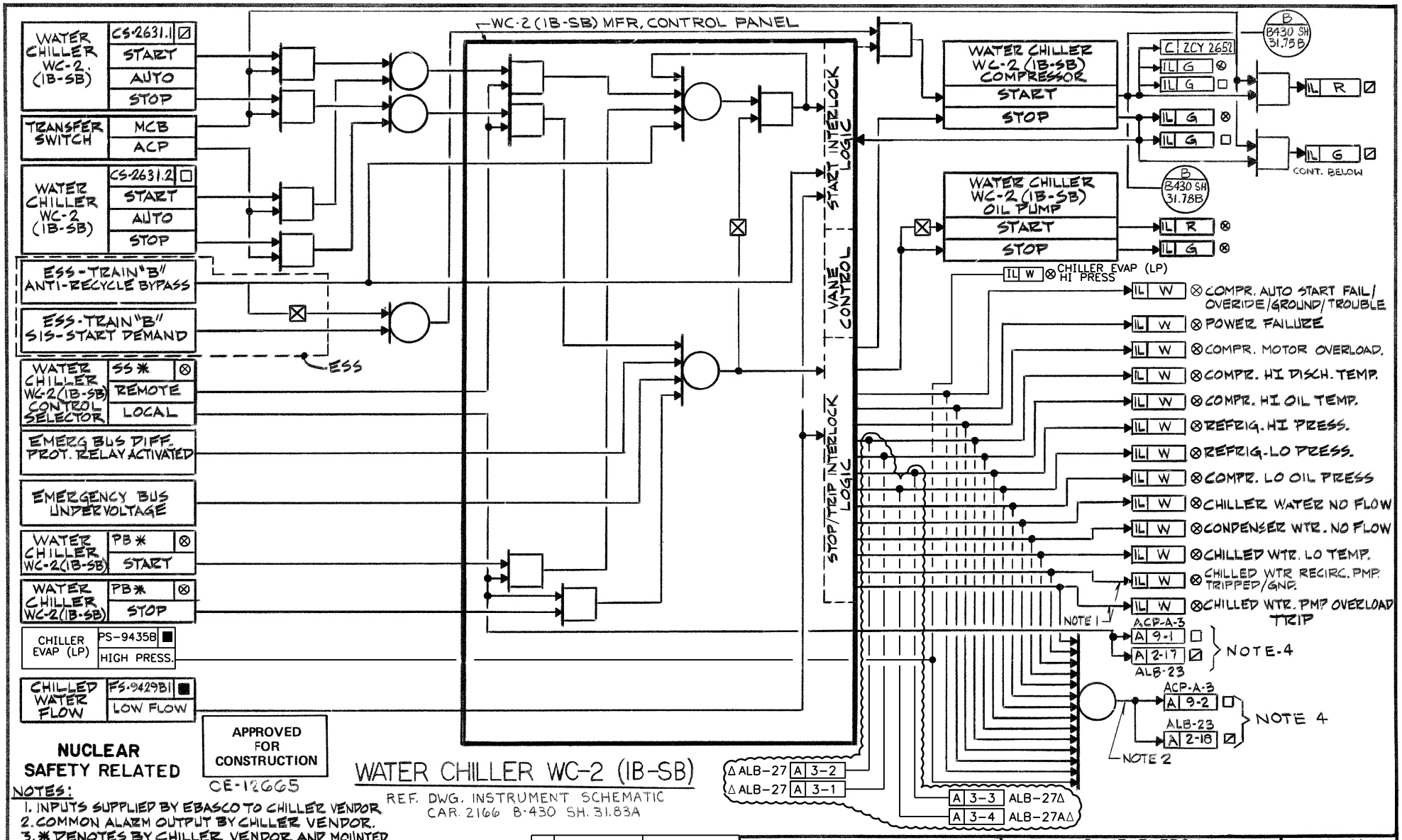

NUCLEAR SAFETY RELATED

APPROVED FOR CONSTRUCTION

CE-12665

WATER CHILLER WC-2 (IB-SB)

REF. DWG. INSTRUMENT SCHEMATIC CAR. 2166 B-430 SH. 31.83A

NOTES:

1. INPUTS SUPPLIED BY EBASCO TO CHILLER VENDOR
2. COMMON ALARM OUTPUT BY CHILLER VENDOR.
3. * DENOTES BY CHILLER VENDOR AND MOUNTED IN MFR. CONTROL PANEL.
4. ALARM TRANSFER ACCOMPLISHED THROUGH THE TRANSFER PANEL

REV	DESCRIPTION	APPROVAL
8	INCORPORATED: EC 293942	ELECTRONICALLY SIGNED
7	INCORPORATED: EC 86519	ELECTRONICALLY SIGNED

EBASCO SERVICES INCORPORATED

DIV. I & C DR. G.P.B. APPROVED
SCALE NA CH. S.D.
DATE OCT. 18, 1976

DUKE ENERGY
SHEARON HARRIS NUCLEAR PP
UNIT NO. 1
INSTRUMENT SCHEMATICS AND LOGIC DIAGRAMS

CAR 2166
B-430
SHEET 31.83

DUKE ENERGY

Facility Code :	HNP
Applicable Facilities :	HNP
Document Number :	6-B-430 31.83A
Document Revision Number :	012
Document EC Number :	
Change Reason :	EC0000293942
Document Title :	CHILLER WC-2(1B-SB) SCHEME "Q"

Pearson, Drew	PREPARER	5/25/2017
Zagami, Michael A	APPROVER	5/25/2017

Notes :

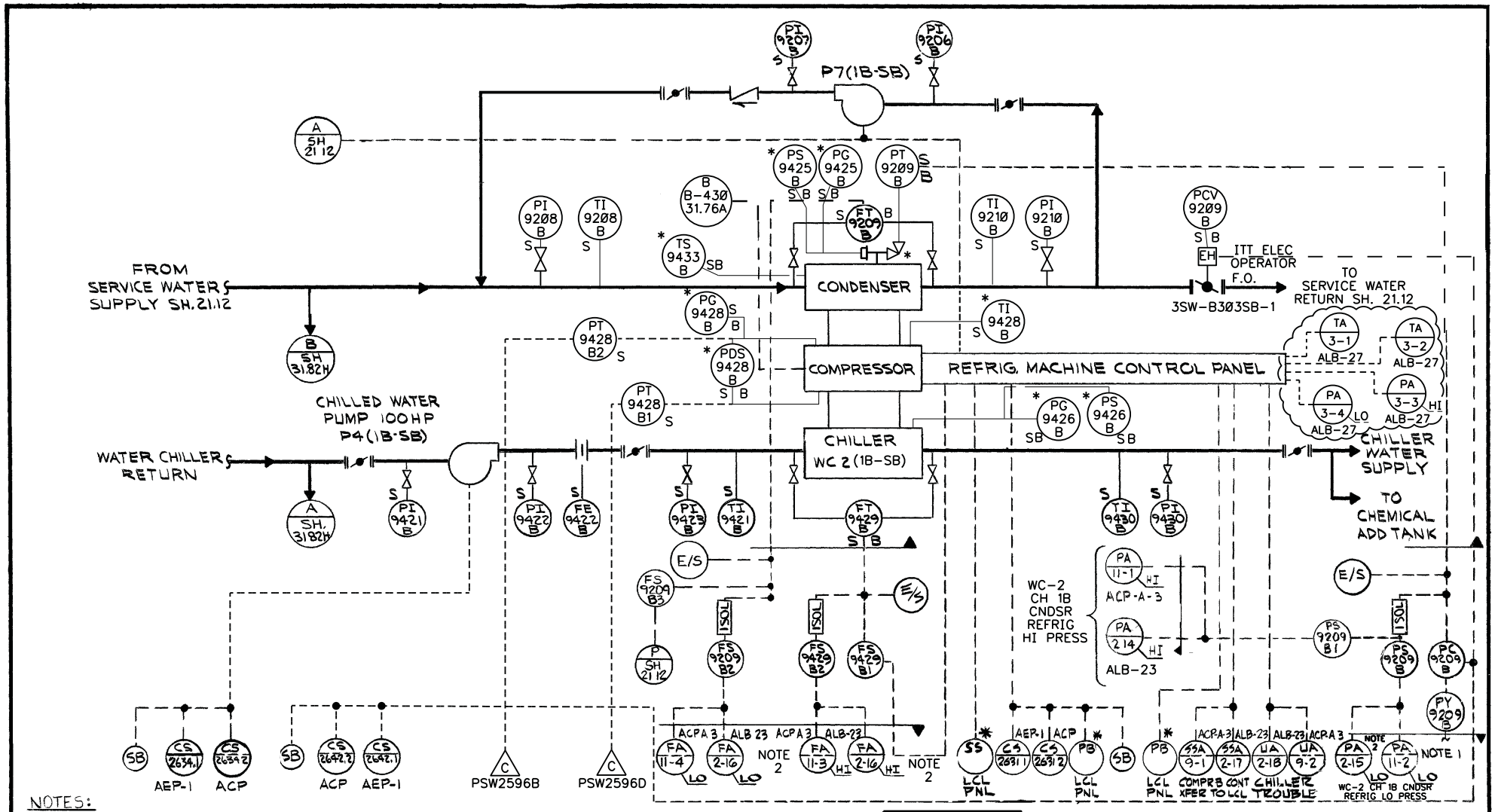

NOTES:

1. DIGITAL INPUT TO CLOSE PCV 9209B WHENEVER THE CHILLER IS STOPPED. (AFTER PRESET TIME DELAY)
   * SUPPLIED BY VENDOR.
2. ALARMS ALB-23 WINDOWS 2-15 AND 2-16 WILL BE DE-ENERGIZED UPON DIGITAL INPUT CONTACT CLOSURE AFTER STOP OF CHILLER TIME DELAY.

SCHEME Q
CHILLER WC-2 (1B-SB)

NUCLEAR SAFETY RELATED

REV	DESCRIPTION	APPROVAL
12	INCORPORATED: EC 293942	ELECTRONICALLY SIGNED
11	INCORPORATED: EC 96897	ELECTRONICALLY SIGNED

EBASCO SERVICES INCORPORATED
NEW YORK
DIV. I&C DR. GPB
SCALE NS CH. SD
DATE OCT 18, 1976
APPROVED

CE-12665

DUKE ENERGY
SHEARON HARRIS NUCLEAR PP
UNIT NO.1
INSTRUMENT SCHEMATICS AND LOGIC DIAGRAMS

CAR 2166
B-430
SHEET 31.83A

DUKE ENERGY

Facility Code :	HNP
Applicable Facilities :	HNP
Document Number :	6-G-0025
Document Revision Number :	008
Document EC Number :	
Change Reason :	EC0000410474
Document Title :	230 KV SWITCHYARD AUXILARY ONE LINE DIAGRAM

Pearson, Drew	PREPARER	9/5/2018
Beidleman, Tim	APPROVER	9/5/2018

Notes :

DWG. NO. CAR 2166-G-0025

230KV SWITCHYARD AUX. ONE LINE DIAGRAM

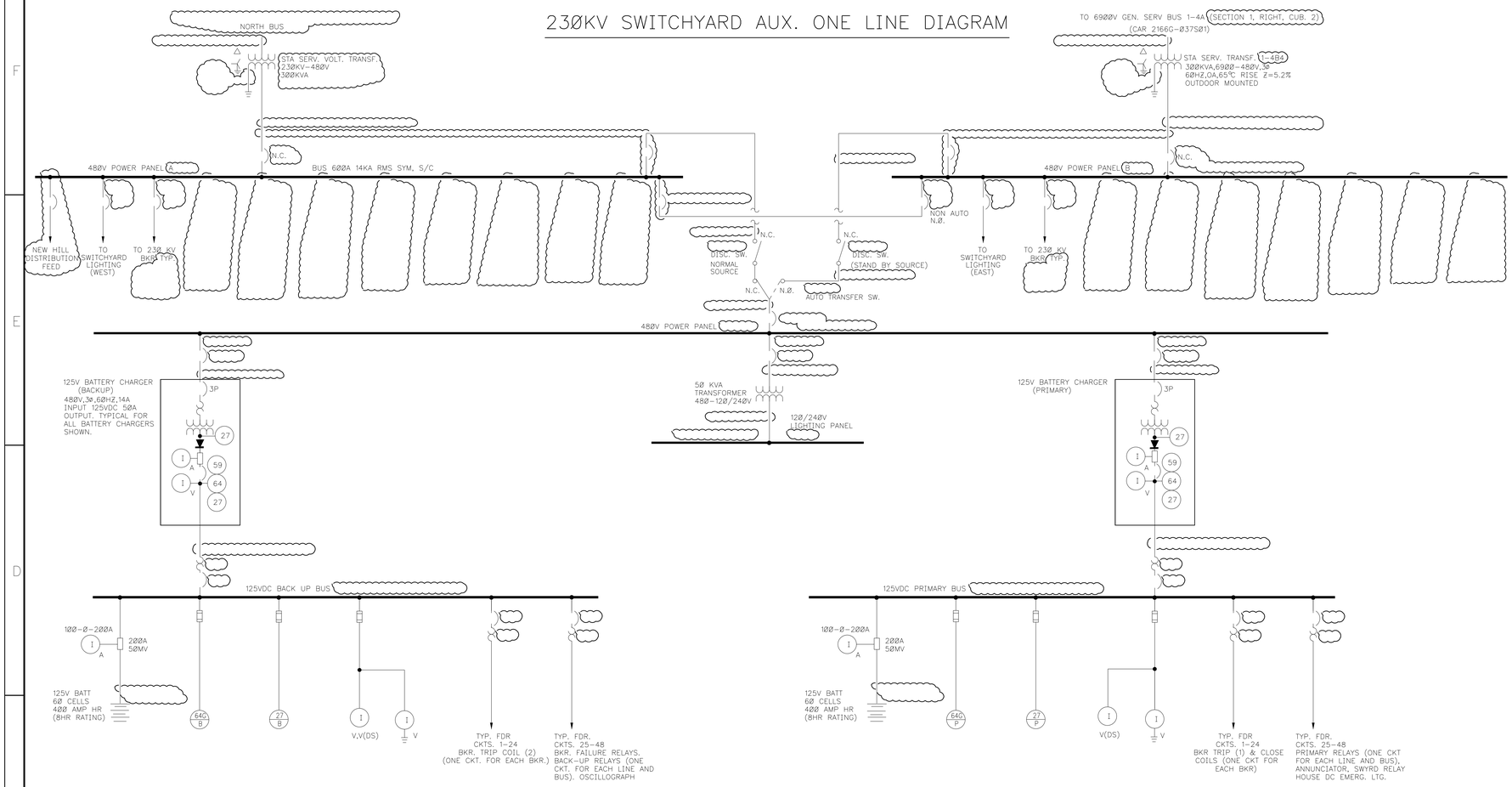

ABBREVIATIONS:

I	INSTRUMENT (V-VOLTMETER, A-AMMETER)
SYM	SYMMETRICAL
S/C	SHORT CIRCUIT CAPACITY
DS	COMPUTER DATA SYSTEM
N.O.	NORMALLY OPEN
N.C.	NORMALLY CLOSED

SYMBOLS:

FOR GRAPHICAL SYMBOLS SEE EBASCO DRAWINGS A-98152 & A-98154 – A-98165 INCLUSIVE.

13. THIS DRAWING IS FOR INFORMATION ONLY. REFER TO TRANSMISSION DRAWING REC-19940 FOR DESIGN DETAILS.

REFERENCE DRAWINGS: CAR-2166

GENERAL SERVICES AUXILIARY ONE LINE WIRING DIAGRAM G-037S01

POWER DISTRIBUTION & MOTOR DATA UNIT 1 B-041

REV	DESCRIPTION	APPROVED
8	INCORPORATED: EC 410474	ELECTRONICALLY SIGNED
7	INCORPORATED: EC 91669	ELECTRONICALLY SIGNED

DUKE ENERGY

QUALITY LEVEL: NON-SAFETY RELATED

PLANT: HARRIS PROJECT – UNIT 1 SCALE: N/A

TITLE: 230 KV SWITCHYARD AUXILIARY ONE LINE DIAGRAM

PLANT DWG NO.: CAR 2166-G-0025

DUKE ENERGY

Facility Code :	HNP
Applicable Facilities :	HNP
Document Number :	6-G-0172
Document Revision Number :	016
Document EC Number :	
Change Reason :	EC0000401380;EC0000401391
Document Title :	TRANSFORMER YARD ARRANGEMENT PLAN UNIT 1

Boudreaux, Sheryl S.	preparer	10/25/2017
Beidleman, Tim	approval	10/25/2017

Notes :

CAR-2166
G-172

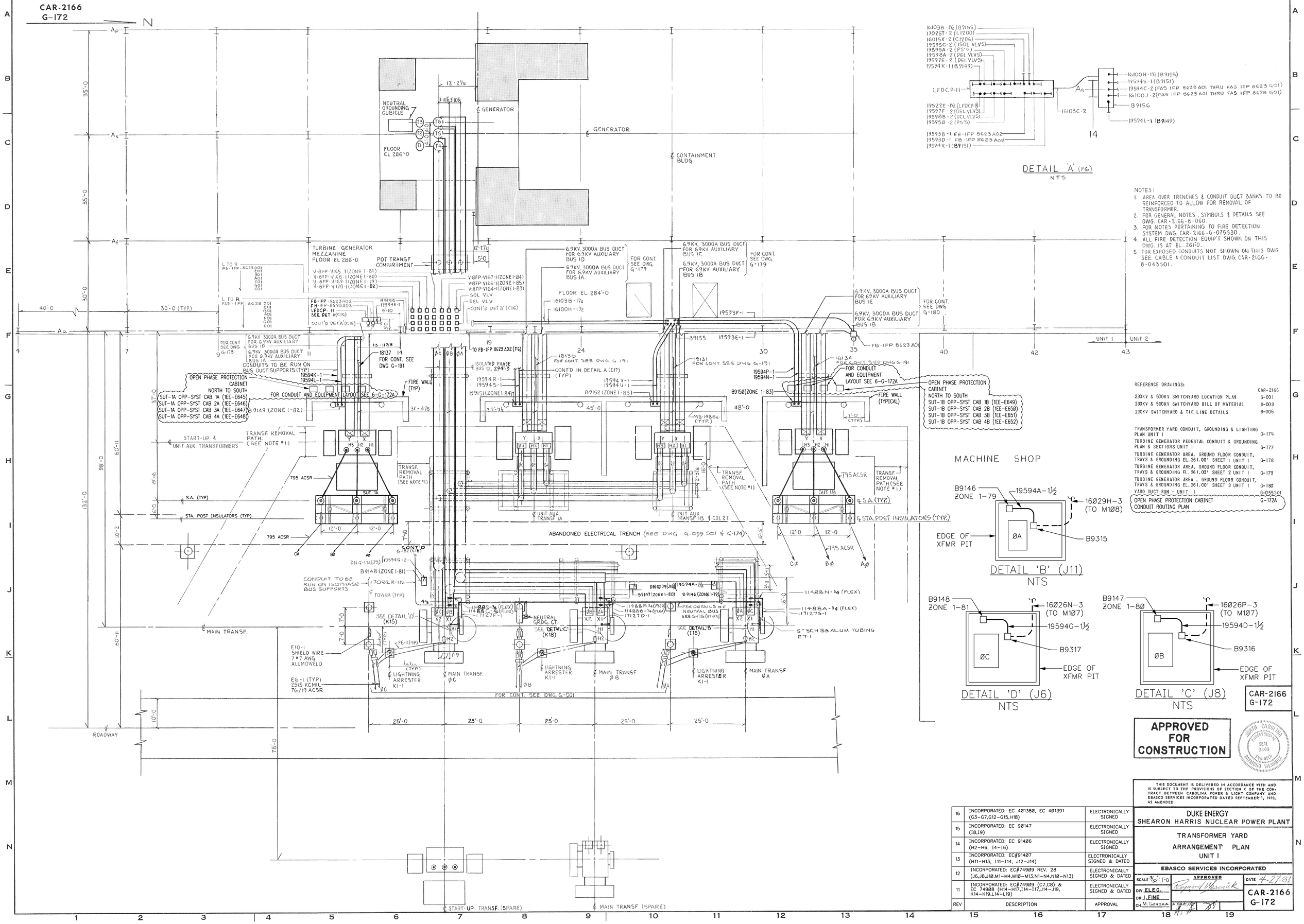

NOTES:

1. AREA OVER TRENCHES & CONDUIT DUCT BANKS TO BE REINFORCED TO ALLOW FOR REMOVAL OF TRANSFORMER.
2. FOR GENERAL NOTES, SYMBOLS & DETAILS SEE DWG. CAR-2166-B-060.
3. FOR NOTES PERTAINING TO FIRE DETECTION SYSTEM, DWG. CAR-2166-G-075530.
4. ALL FIRE DETECTION EQUIP'T SHOWN ON THIS DWG. IS AT EL. 261'-0.
5. FOR EXPOSED CONDUITS NOT SHOWN ON THIS DWG. SEE CABLE & CONDUIT LIST DWG. CAR-2166-B-043501.

REFERENCE DRAWINGS:

230KV & 500KV SWITCHYARD LOCATION PLAN	CAR-2166 G-001
230KV & 500KV SWITCHYARD BILL OF MATERIAL	B-003
230KV SWITCHYARD & TIE LINE DETAILS	B-005
TRANSFORMER YARD CONDUIT, GROUNDING & LIGHTING PLAN UNIT 1	G-174
TURBINE GENERATOR PEDESTAL CONDUIT & GROUNDING PLAN & SECTIONS UNIT 1	G-177
TURBINE GENERATOR AREA, GROUND FLOOR CONDUIT, TRAYS & GROUNDING EL. 261.00' SHEET 1 UNIT 1	G-178
TURBINE GENERATOR AREA, GROUND FLOOR CONDUIT, TRAYS & GROUNDING EL. 261.00' SHEET 2 UNIT 1	G-179
TURBINE GENERATOR AREA, GROUND FLOOR CONDUIT, TRAYS & GROUNDING EL. 261.00' SHEET 3 UNIT 1	G-180
YARD DUCT RUN - UNIT 1	G-055501
OPEN PHASE PROTECTION CABINET CONDUIT ROUTING PLAN	G-172A

CAR-2166
G-172

APPROVED FOR CONSTRUCTION

NORTH CAROLINA PROFESSIONAL SEAL 9309 ENGINEER RAYMOND WISNIEWSKI

THIS DOCUMENT IS DELIVERED IN ACCORDANCE WITH AND IS SUBJECT TO THE PROVISIONS OF SECTION X OF THE CONTRACT BETWEEN CAROLINA POWER & LIGHT COMPANY AND EBASCO SERVICES INCORPORATED DATED SEPTEMBER 1, 1970, AS AMENDED.

REV	DESCRIPTION	APPROVAL
16	INCORPORATED: EC 401380, EC 401391 (G3-G7,G12-G15,H18)	ELECTRONICALLY SIGNED
15	INCORPORATED: EC 90147 (I8,I9)	ELECTRONICALLY SIGNED
14	INCORPORATED: EC 91406 (H2-H6, I4-I6)	ELECTRONICALLY SIGNED
13	INCORPORATED: EC#91407 (H11-H13, I11-I14, J12-J14)	ELECTRONICALLY SIGNED & DATED
12	INCORPORATED: EC#74909 REV. 28 (J6,J8,J10,M1-M4,M18-M13,N1-N4,N10-N13)	ELECTRONICALLY SIGNED & DATED
11	INCORPORATED: EC#74909 (C7,C8) & EC 74908 (H14-H17,I14-I17,J14-J19, K14-K19,L14-L19)	ELECTRONICALLY SIGNED & DATED

DUKE ENERGY
SHEARON HARRIS NUCLEAR POWER PLANT

TRANSFORMER YARD
ARRANGEMENT PLAN
UNIT 1

EBASCO SERVICES INCORPORATED

SCALE 3/32"=1'-0 | APPROVED | DATE 4-27-81
DIV ELEC. | DR J. FINE | CH M. GONSKA

CAR-2166
G-172

DUKE ENERGY

Facility Code :	HNP
Applicable Facilities :	HNP
Document Number :	6-G-0425 S01
Document Revision Number :	011
Document EC Number :	
Change Reason :	EC0000403147
Document Title :	INST SCH & LOGIC DIAG SERVICE WTR PUMPS & BOOSTER PUMPS UN 1

Mehta, Ameeta	Preparer	11/14/2017
Spear, Jeffrey	Approver	11/14/2017

Notes :

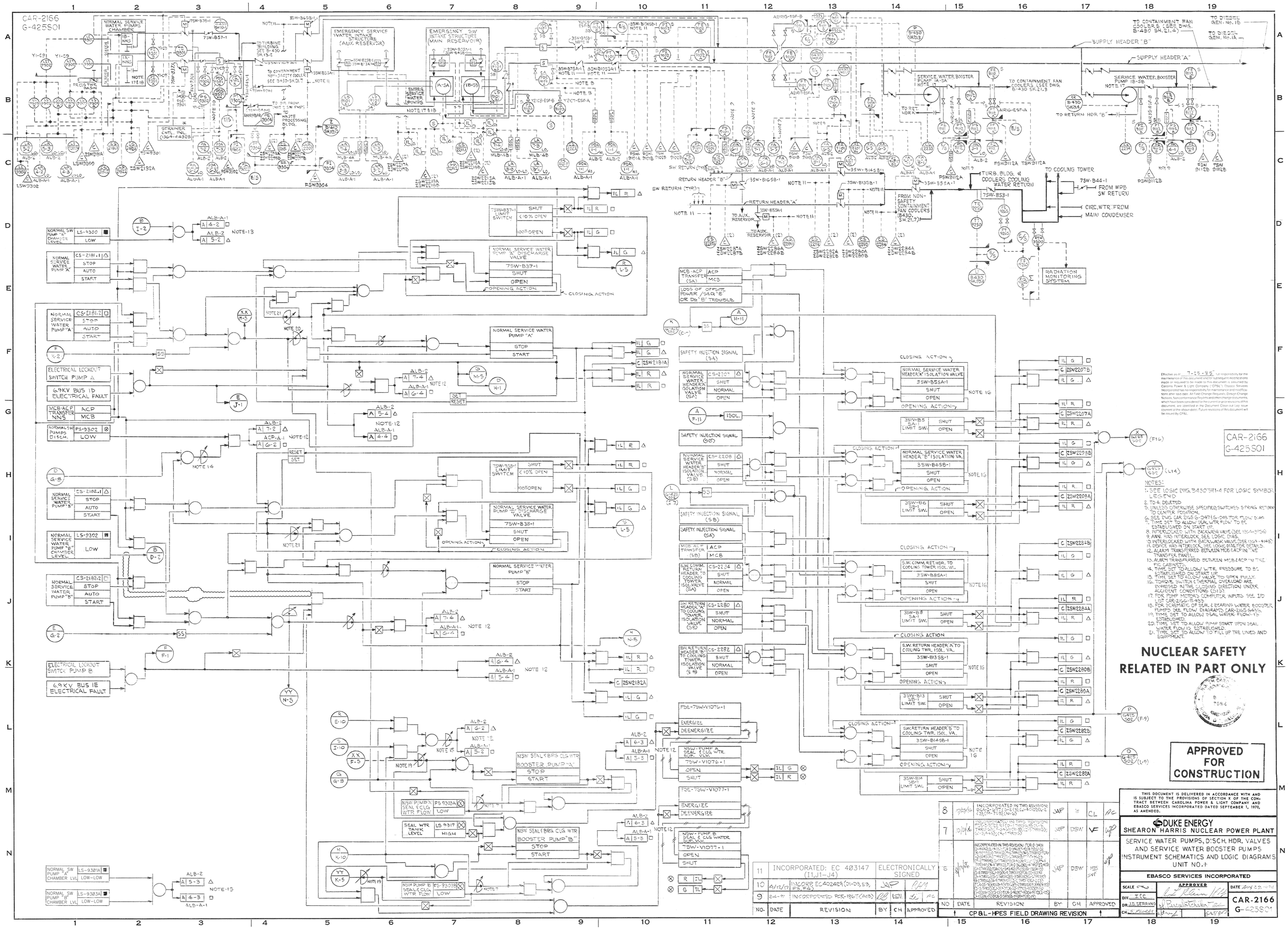
CAR-2166
G-425S01
NORMAL SERVICE WATER PUMPS CHAMBER
EMERGENCY SERVICE WATER INTAKE STRUCTURE (AUX. RESERVOIR)
EMERGENCY SW INTAKE STRUCTURE (MAIN RESERVOIR)
EMERG. SERVICE WATER PUMPS
SUPPLY HEADER "B"
SUPPLY HEADER "A"
TO CONTAINMENT FAN COOLERS (SEE DWG. B-430 SH.21.4)
TO DIESEL GEN. No. 1B
TO DIESEL GEN. No. 1A
SERVICE WATER BOOSTER PUMP 1A-SA
SERVICE WATER BOOSTER PUMP 1B-SB
TO CONTAINMENT FAN COOLERS (SEE DWG. B-430 SH.21.3)
TO RET. HDR. "A"
TO RETURN HDR. "B"
TURB. BLDG. & COOLERS COOLING WATER RETURN
TO COOLING TOWER
FROM WPB SW RETURN
CIRC. WTR. FROM MAIN CONDENSER
RADIATION MONITORING SYSTEM
RETURN HEADER "B"
RETURN HEADER "A"
SW RETURN (TYP)
TO AUX. RESERVOIR
FROM NON-SAFETY CONTAINMENT FAN COOLERS (B430. SH.21.7)
NORMAL SW PUMP "A" CHAMBER LEVEL
NORMAL SERVICE WATER PUMP "A"
NORMAL SERVICE WATER PUMP "A"
ELECTRICAL LOCKOUT SWITCH PUMP A
6.9KV BUS 1D ELECTRICAL FAULT
MCB-ACP TRANSFER NNS
NORMAL SW PUMPS DISCH.
NORMAL SERVICE WATER PUMP "B"
NORMAL SERVICE WATER PUMP "B" CHAMBER LEVEL
NORMAL SERVICE WATER PUMP "B"
ELECTRICAL LOCKOUT SWITCH PUMP B
6.9KV BUS 1E ELECTRICAL FAULT
NORMAL SW PUMP "A" CHAMBER LVL
NORMAL SW PUMP "B" CHAMBER LVL
7SW-B37-1 LIMIT SWITCH
NORMAL SERVICE WATER PUMP "A" DISCHARGE VALVE
7SW-B37-1
NORMAL SERVICE WATER PUMP "A"
MCB-ACP TRANSFER (SA)
LOSS OF OFFSITE POWER / SEQ. "B" OR DG "B" TROUBLE
SAFETY INJECTION SIGNAL (SA)
NORMAL SERVICE WATER HEADER "A" ISOLATION VALVE (SA)
NORMAL SERVICE WATER HEADER "A" ISOLATION VALVE
3SW-B35A-1
3SW-B5 SA-1 LIMIT SW.
7SW-B38-1 LIMIT SWITCH
NORMAL SERVICE WATER PUMP "B" DISCHARGE VALVE
7SW-B38-1
NORMAL SERVICE WATER PUMP "B"
SAFETY INJECTION SIGNAL (SB)
NORMAL SERVICE WATER HEADER "B" ISOLATION VALVE (SB)
NORMAL SERVICE WATER HEADER "B" ISOLATION VA.
3SW-B6SB-1
3SW-B6 SB-1 LIMIT SW.
MCB-ACP TRANSFER (SB)
S.W. COMM. RETURN HEADER TO COOLING TOWER ISOLVALVE (SA)
S.W. COMM. RET. HDR. TO COOLING TOWER, ISOL. VA.
3SW-B8SA-1
3SW-B8 SA-1 LIMIT SW.
SW. RETURN HEADER "A" TO COOLING TOWER ISOLATION VALVE (SB)
SW. RETURN HEADER "A" TO COOLING TWR. ISOL. VA.
3SW-B13SB-1
3SW-B13 SB-1 LIMIT SW.
SW. RETURN HEADER "B" TO COOLING TOWER ISOLATION VALVE (SB)
SW. RETURN HEADER "B" TO COOLING TWR. ISOL. VA.
3SW-B14SB-1
3SW-B14 SB-1 LIMIT SW.
NSW SEAL & BRG CLG WTR BOOSTER PUMP "A"
NSW PUMP A SEAL & CLG WTR FLOW
SEAL WTR TANK LEVEL
NSW SEAL & BRG CLG WTR BOOSTER PUMP "B"
NSW PUMP B SEAL & CLG WTR FLOW
FSE-7SW-V1076-1
NSW-PUMP A SEAL & CLG WTR. SUP. VLV.
7SW-V1076-1
FSE-7SW-V1077-1
NSW-PUMP B SEAL & CLG WATER SUP. VLV.
7SW-V1077-1
NOTE 1G
NOTE 12
NOTE 13
NOTE 14
NOTE 15
NOTE 19
NOTE 20
NOTE 21
NOTE 11
NOTE 9
NOTE 3
NOTE 17 & 18
CLOSING ACTION
OPENING ACTION
SET
RESET
ALB-A-1
ALB-2
ACP-A-1
NUCLEAR SAFETY RELATED IN PART ONLY
APPROVED FOR CONSTRUCTION
THIS DOCUMENT IS DELIVERED IN ACCORDANCE WITH AND IS SUBJECT TO THE PROVISIONS OF SECTION X OF THE CONTRACT BETWEEN CAROLINA POWER & LIGHT COMPANY AND EBASCO SERVICES INCORPORATED DATED SEPTEMBER 1, 1970, AS AMENDED.
DUKE ENERGY
SHEARON HARRIS NUCLEAR POWER PLANT
SERVICE WATER PUMPS, DISCH. HDR. VALVES AND SERVICE WATER BOOSTER PUMPS INSTRUMENT SCHEMATICS AND LOGIC DIAGRAMS UNIT NO. 1
EBASCO SERVICES INCORPORATED
CAR-2166
G-425S01
CP&L-HPES FIELD DRAWING REVISION
NO. DATE REVISION BY CH APPROVED
8 INCORPORATED IN THIS REVISION: JAF CL PC
7 INCORPORATED IN THIS REVISION: JAF DSW VF
6 INCORPORATED IN THIS REVISION: JAF DSW
11 INCORPORATED: EC 403147 (I1, J1-J4) ELECTRONICALLY SIGNED
10 INCORP. EC 402429 (D1-D3, E3, E5, E6)
9 INCORPORATED PCR-1360T (NIS)

Facility Code :	HNP
Applicable Facilities :	HNP
Document Number :	7-G-0512
Document Revision Number :	010
Document EC Number :	
Change Reason :	EC0000407633
Document Title :	ELECTRICAL MANHOLES CLASS I M86 & M87 MAR & REINF

Martinez-Llanos, Julio E	Preparer	10/9/2017
Collins, Timothy	Approver (RE)	10/16/2017

Notes :

CAR-2167
G-0512

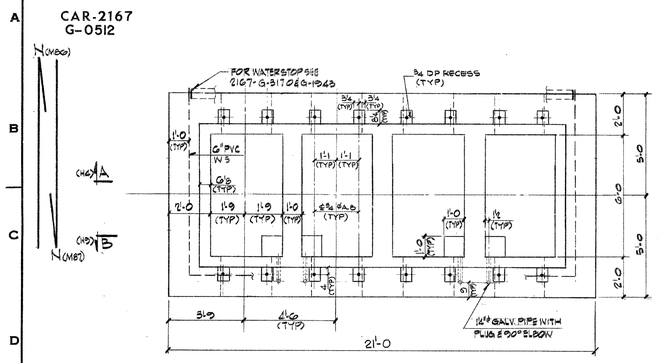

TOP PLAN

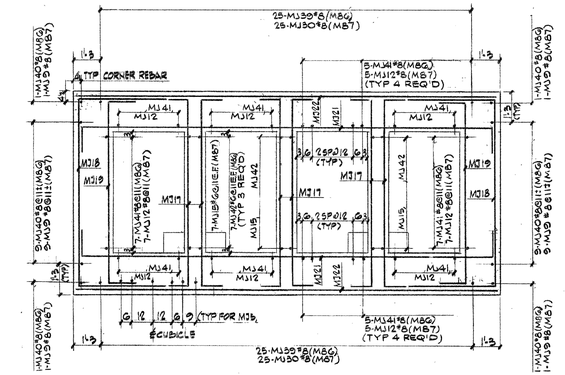

SECT C-C (F1)
(AS SHOWN FOR M86)
(OPP HAND FOR M87)

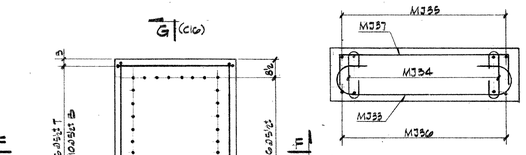

PLAN G1

SECT G-G (A13)

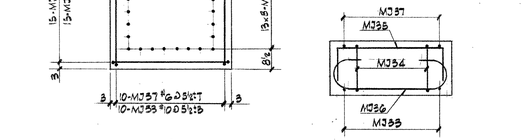

SECT. F-F (B12)

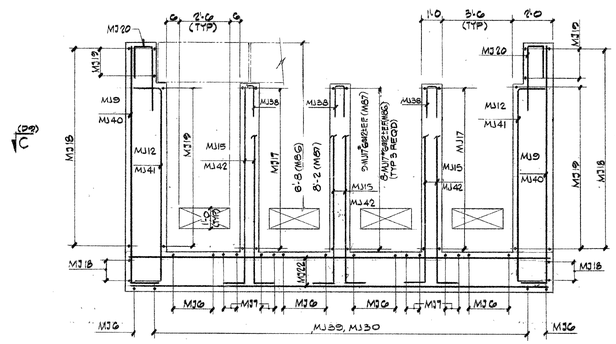

SECT A-A (B1)

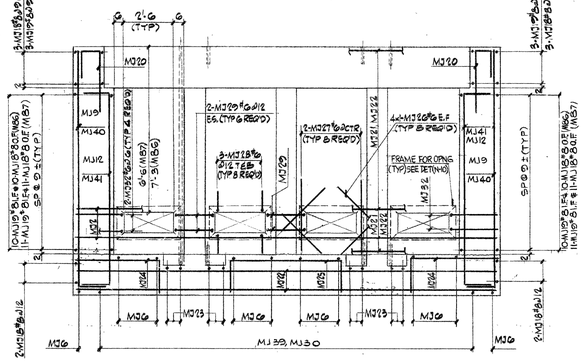

SECT B-B (C1)

MANHOLE COVER - REINF
½"=1'-0

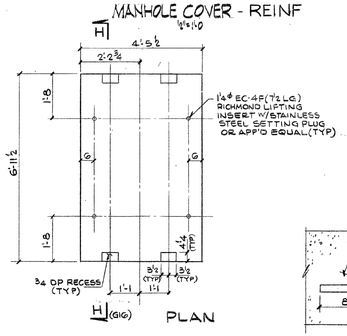

PLAN

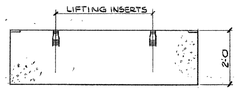

SECT H-H (H13)

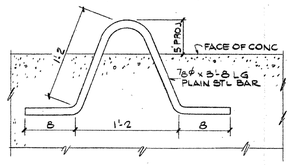

PULLING IRON DET
½"=1'-0

MANHOLE COVER - MAS (70 REQ'D)
½"=1'-0

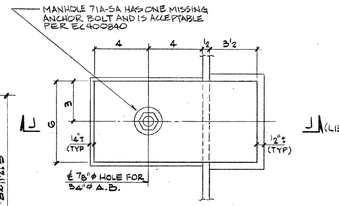

PLAN

TYP COVER HOLD DOWN ℞ DET (LG)
½"=1'-0

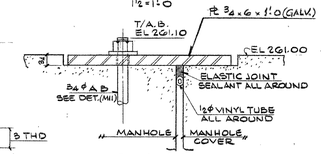

SECT J-J (I13)
½"=1'-0

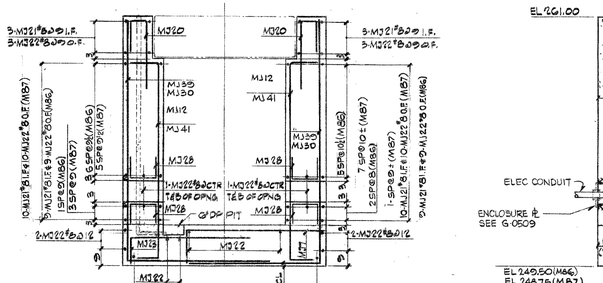

SECT D-D (K2)

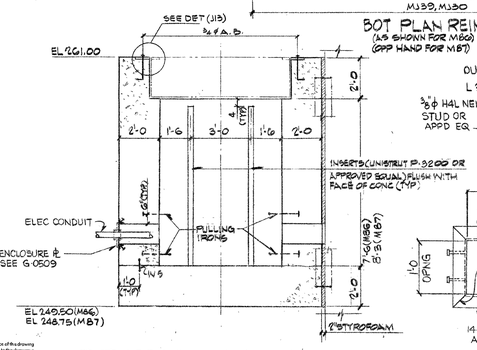

TYP SECT THRU WALL OPNG'S

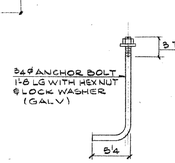

TYP A.B. DET. (H13)
½"=1'-0

SECT K-K (N11)
1"=1'-0

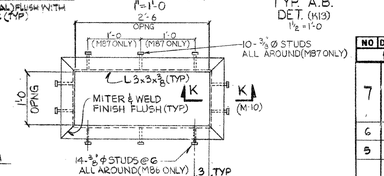

FRAME FOR OPNG-DET
(6 REQ'D 1"=1'-0

QUANTITIES (NET, BY FIELD UNLESS NOTED)

CONCRETE CLASS 'AA' (4000 PSI)	
ELECTRICAL MANHOLES	120 CU.YDS
MANHOLE COVERS	168 CU.YDS
FOR REINF STL SEE BAR BENDING SCHEDULE	2167-B-0002-B
*2" STYROFOAM	500 SQ.FT.
*6" PVC WATERSTOP	612 LIN.FT.
INSERTS (GALV UNISTRUT P3200 OR APP'D EQUAL)	245 LIN.FT.
*¼"⁰, 11'-6 LG GALV PIPE (SCHED 40) THD ONE END WITH PLUG & 90° ELBOW	4 REQ'D
*14⁰ x 12'-0 LG GALV PIPE (SCHED 40) THD ONE END WITH PLUG & 90° ELBOW	4 REQ'D
*PULLING IRONS AS PER DET (N12) OR, HUBBARD 9120	32 REQ'D
*¾⁰ Ø A.B. (GALV) AS PER DET (M11)	32 REQ'D
*R ¾ x 6 x 1'-0 (GALV) AS PER DET (J13)	280 REQ'D
*1¼⁰ EC-4F (T½LG) RICHMOND LIFTING INSERTS W/SS. PLUG OR APP'D EQ	280 REQ'D
*½⁰ VINYL TUBING	1270 LIN FT
*ELASTIC JOINT SEALANT	1270 LIN FT
FRAME FOR OPENING AS PER DET (N10)	16 REQ'D

NOTES

ELECTRICAL MANHOLES ARE CLASS I SEISMIC STRUCTURES.

CONCRETE SHALL BE CLASS 'AA' (4000 PSI) PER SPECIFICATION CAR-SH-CH6 'CONCRETE'.

CONSTRUCTION WHERE NOT SPECIFICALLY COVERED BY EBASCO SPECIFICATIONS, SHALL MEET THE STANDARDS OF ACI 318-71 AND ACI 301-72. IN THE EVENT OF CONFLICT BETWEEN THESE ACI STANDARDS, ACI 301-72 SHALL GOVERN.

FOR SPECIFICATIONS FOR STEEL FOR CONCRETE REINFORCING BARS AND FOR BAR DETAILS SEE BAR BENDING SCHED. 2167-B-0002-B.

PLACING DIMENSIONS ARE GIVEN TO CENTER OF BARS UNLESS NOTED.

ALL SPLICES IN REINFORCEMENT SHALL COMPLY WITH THE REQUIREMENTS OF ACI 318-71 CODE SECTIONS 7.5 TO 7.12 INCLUSIVE, BUT IN NO CASE SHALL LAP BE LESS THAN 30 BAR DIAMETERS.

ALL BARS SHALL HAVE 2 INCH MINIMUM CONCRETE COVER UNLESS OTHERWISE NOTED.

SHIFT OR BEND BARS TO CLEAR ANCHOR BOLTS, DRAINS, PIPE SLEEVES AND EMBEDDED PARTS.

PVC NS (POLYVINYL CHLORIDE WATERSTOP) SHALL BE IN ACCORDANCE WITH EBASCO SPECIFICATION CAR-SH-CH12 'WATERSTOPS'.

FOR LOCATION OF MANHOLES SEE 2166-G-055.

ALL BACKFILL SHALL BE PLACED IN ACCORDANCE WITH EBASCO SPECIFICATION CAR-SH-CH8 'EXCAVATION, BACKFILL, FILLING & GRADING'.

FIELD TO CUT REBARS TO CLEAR OPENINGS FOR ELECTRICAL CONDUITS.

AT ALL CONSTRUCTION JOINTS WHERE NO FORMED KEYWAY IS SHOWN ON DRAWING, THE CONCRETE SHALL BE CLEANED FREE OF LATANCE AND ROUGHENED UNTIL THE AGGREGATE IS EXPOSED FOR A DEPTH OF ¼".

MANHOLES SHALL BE PLACED ENTIRELY ON EXISTING SOIL, COMPACTED BACKFILL OR ROCK. WHERE THE MANHOLE WOULD REST PARTLY ON ROCK, REMOVE ROCK FOR A MINIMUM DEPTH OF 24 INCHES AND REPLACE WITH COMPACTED RANDOM FILL. RANDOM FILL SHALL BE COMPACTED TO 95% STANDARD PROCTOR DENSITY.

ALL EMBEDDED PARTS SHALL BE IN POSITION BEFORE CONCRETE IS PLACED.

STRUCTURAL STEEL SHALL BE IN ACCORDANCE WITH ASTM SPECIFICATION A36.

ANCHOR BOLTS SHALL BE IN ACCORDANCE WITH ASTM SPECIFICATION A36.

CLEANING AND PAINTING OF STRUCTURAL STEEL SHALL BE ACCORDANCE WITH EBASCO SPECIFICATION CAR-SH-AS7.

*INDICATES NON-NUCLEAR SAFETY RELATED ITEM.

WEIGHT OF EACH COVER SHALL BE STENCILED ON TOP OF THE COVER.

REFERENCE DRAWING 8-G-0258 FOR CORE BORE DETAILS WITHIN VAULT COVERS AS PART OF THE MODIFICATIONS PERFORMED WITHIN EC 487245.

COVERS & HOLD DOWN ℞'S SCHEDULE			
M.H. No.	No. OF COVERS	No. OF ℞'s	DWG. No.
M.70	8	32	G-0511
M.71	8	32	G-0510 & 518
M.72	8	32	G-0510 & 512
M.73	8	32	G-0510 & 518
M.84	4	16	G-0517
M.86	4	16	G-0512
M.87	4	16	G-0512
M.505	6	24	G-0507
M.511	4	16	G-0508
M.512	4	16	G-0508
M.513	4	16	G-0508
M.223	8	32	G-0506

REFERENCE DRAWINGS

LIST OF DRAWINGS	CAR-1364-A-125
BAR BENDING SCHEDULE	2167-B-0002-B
YARD DUCT RUNS UNITS 12&14 (ELEC)	2166-G-055
MANHOLE & HANDHOLE DETAILS (ELEC)	2166-G-058
DIESEL FUEL OIL STG TK BLDG PLAN & DET. M	2167-G-3170
FH & AUX BLDG NORTH WALL	2167-G-1045
ELEC MH CLASS I M70	2167-G-0511
ELEC MH CLASS I M523	2167-G-0506
PROTECTIVE MAT FOR CLASS I YARD DUCT RUNS PLAN & MISC DET M&R	2167-G-0509
ELEC MH CLASS I M505	2167-G-0507
ELEC MH CLASS I M511, M512, M513	2167-G-0508
ELEC MH CLASS I M71, M72, M73, M87-G-0510 & 1512	
ELEC MH CLASS I M84	2167-G-517
ELEC MH CLASS I	2167-G-518

CLASS IE CABLE VAULT SUMP PUMP LEVEL TRANSMITTER INSTALLATION DETAILS 8-G-0258

THE FOLLOWING "AS BUILT" FCR'S, PW'S DCN'S & RCI'S HAVE NOT BEEN INCORPORATED AS PER EBASCO PROCEDURE "E11": FCR-C-1297, 4188 PW-C-1897, PW-C-2050

THE FOLLOWING DCN'S/FCR'S DID NOT REQUIRE ANY DRAWING CHANGES: FCR-C-4272, C-5255

CAR-2167
G-0512

NUCLEAR SAFETY RELATED

NO	DATE	REVISION	BY	CK	SUP	APP
		CP&L-HPES FIELD DRAWING REVISION				
7	5-30-84	INCORP AS BUILT DCN, PW & FCR: 1 DCN-590-545, 600. ADDED: (L13) AS BUILT NOTE. DELETED MH's M88 & M89 AS PER CANCELLATION OF UNITS 3&4 AS CIRCLED.	JM	B.T.		
6	11-15-80	REV: (A19, C9, H9, K7, I15, J13) NOTE. ADD: (L16) SCH. (L16) REF DWGS	S.L.B.	D.T.		
5	7-30-79	REL: (M14) FH M89. REV: MH 5 *M86, M87, M88 & M 89 AS CIRCLED	R.H.S	N.V.		
4	2-9-79	RELOC (B12, D13) DIM. DEL: (F13-P17 THRU L13-L17, E1-E5, C1, J1, K1, L1, D.D8) MANHOLE COVER, PRMG. DET & QUANT. ADD: AS PER DCN 850-117 (S2-S9, C2-C5, F13-F17 THRU L13-L17, G18) MANHOLE COVER, HOLD DOWN ℞ DET & QUANT. (F2, F3, F4, V2, J3) & REINF	R.H.S	D.T.		

NO.	DATE	REVISION	BY	CK.	APPROVED
10		INCORPORATED EC 487633		ELECTRONICALLY SIGNED AND DATED	
9	11/3/15	INCORPORATED EC400840 (M12, M13)	JAP		
8	1/26/12	INCORP FCR-C-5012 (G1, G5, G7, G11, N2, N3) & C-5216 (M9, N10). NOTE (E16)			
7	12-21-79	REVISED: (C6) QTY AS PER FCR C-3297 DATED 12/18/78, (D10, M3) INSERT TYPE; (N5) OPNGS; (A19) QTY. ADDED: (D16) QTY (G10, N10) FRAMES (M4) NOTE 3. (J1) DOWEL (G10) OPNGS; (G10) WS; (N5, P5) FTG (M1) NO REQ	S.L.B. N.N.	D.T. E.T.	BAW
3		DELETED: (N10) DET & (G10, J1) (G10) WS; (N5, P5) FTG (M1) NO REQ			
2	5-16-78	RELEASED: (I13, L15) M, M & MH COVERS FRAMING (E15) M.H COVERS	LOM	D.T.	
1	12-2-77	ADD: (L10, N4, D1) NOT RELEASED, (N5) NPO REQ'S & APPLIQUE. REV: (A15, B3, S3) QUANTITIES, (G1-G10) W.S. RELEASED FOR CONSTRUCTION AS PER C.P.&L. LETTER CB-00618-C DATED 11-7-77	R.H.S	D.T.	

ELECTRICAL MANHOLES CLASS I
M86 & M87
MAS & REINF

EBASCO SERVICES INCORPORATED

DUKE ENERGY
SHEARON HARRIS NUCLEAR PLANT

DESIGN CALC BOOK Nº EL101

Effective as of 7-30-84 full responsibility for the maintenance of this drawing and for subsequent modifications made on request to be made to this drawing is assumed by Carolina Power & Light Company (CP&L). Ebasco Services Incorporated has no responsibility for maintenance and modifications after said date. All Field Change Requests, Design Change Notices and Non-Conformance Reports affecting this drawing must be reviewed by CP&L prior to proceeding. Any revisions of this drawing are identified on the drawing if applicable, or are identified in the Drawing Control Log upon request at the above date, if not applicable. Future revisions of this drawing will be issued by CP&L.

THIS DOCUMENT IS DELIVERED IN ACCORDANCE WITH AND IS SUBJECT TO THE PROVISIONS OF SECTION X OF THE CONTRACT BETWEEN CAROLINA POWER & LIGHT COMPANY AND EBASCO SERVICES INCORPORATED DATED SEPTEMBER 1, 1970, AS AMENDED.

APPROVED FOR CONSTRUCTION

WORK THIS DWG. WITH 2167-G-0510, G-0511 & G-0509

	APPROVED	DATE
DIV. CIVIL	Nancy Weber	Oct 31, 1977
DR. R. MARRA		
CH. D. TURNER		

SCALE ¾"=1'-0 (FULL SIZE)

CAR-2167
G-0512

PHASE 3A

DUKE ENERGY

Facility Code :	HNP
Applicable Facilities :	HNP
Document Number :	8-G-0497 S01
Document Revision Number :	010
Document EC Number :	
Change Reason :	EC0000407334
Document Title :	HVAC NON ESSENTIAL SERVICES CHILLED WATER - DISTRIBUTION FLOW DIAGRAM - W.P.B.

Pearson, Drew	PREPARER	11/16/2017
Pitser, Kenneth N.	APPROVER	11/16/2017

Notes :

CAR-216
G-497S01

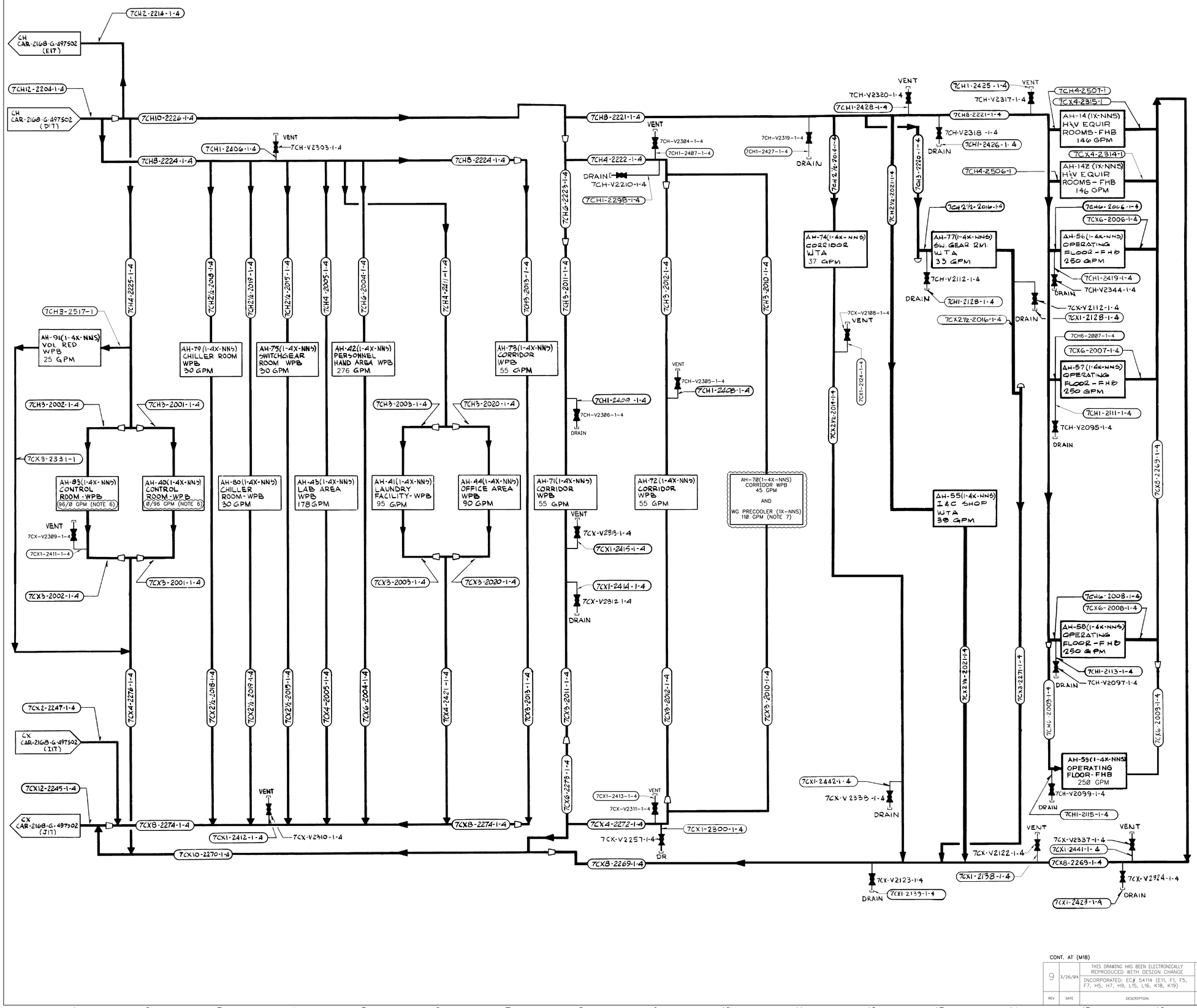

NOTES:

1. FOR GENERAL NOTES SEE DWG CAR-2168-G-509501
2. FOR LEGEND & SYMBOLS SEE DWG CAR-2168-G-528502
3. TEMPORARY STRAINERS USED FOR INITIAL FLUSHING ARE TO BE REMOVED
4. FOR REFERENCES DWG'S SEE DWG CAR-2168-G-499
5. COOLING COIL, THREEWAY VALVES, PIPE CONNECTIONS AND SIZES ARE SUBJECT TO APPROVED CERTIFIED VENDOR'S DRAWINGS
6. CHILLED WATER FLOW TO BE ISOLATED TO OUT OF SERVICE AIR HANDLING UNIT.
7. CHILLED WATER FLOW TO WG PRECOOLER MAY BE ISOLATED WHEN WG PRECOOLER NOT NEEDED.

CONT. AT (M18)

REV	DATE	DESCRIPTION	DWN	CHK	APPR'D
9	3/26/04	THIS DRAWING HAS BEEN ELECTRONICALLY REPRODUCED WITH DESIGN CHANGE. INCORPORATED: EC# 54114 (E11, F1, F5, F7, H5, H7, H9, L15, L16, K18, K19)	JAP	RPP	CRW

REV	DESCRIPTION	APPROVED
10	INCORPORATED: EC 407334 (H1, H2, H11, K18)	ELECTRONICALLY SIGNED

DUKE ENERGY

QUALITY LEVEL: NON SAFETY RELATED

PLANT: HARRIS PROJECT – UNIT 1 SCALE: NONE

TITLE: HVAC NON ESSENTIAL SERVICES CHILLED WATER – DISTRIBUTION FLOW DIAGRAM – W.P.B.

PLANT DWG NO.: 2168-G-0497 S01

DUKE ENERGY

Facility Code :	HNP
Applicable Facilities :	HNP
Document Number :	8-G-0498 S02
Document Revision Number :	034
Document EC Number :	
Change Reason :	EC0000301132
Document Title :	HVAC ESSENTIAL SERVICES CHILLED WATER CONDENSER FLOW DIAGRAM UNIT 1-SA

Pearson, Drew	PREPARER	4/19/2018
Almond, Erv	APPROVER	4/19/2018

Notes :

CAR-2168
G-498SØ2

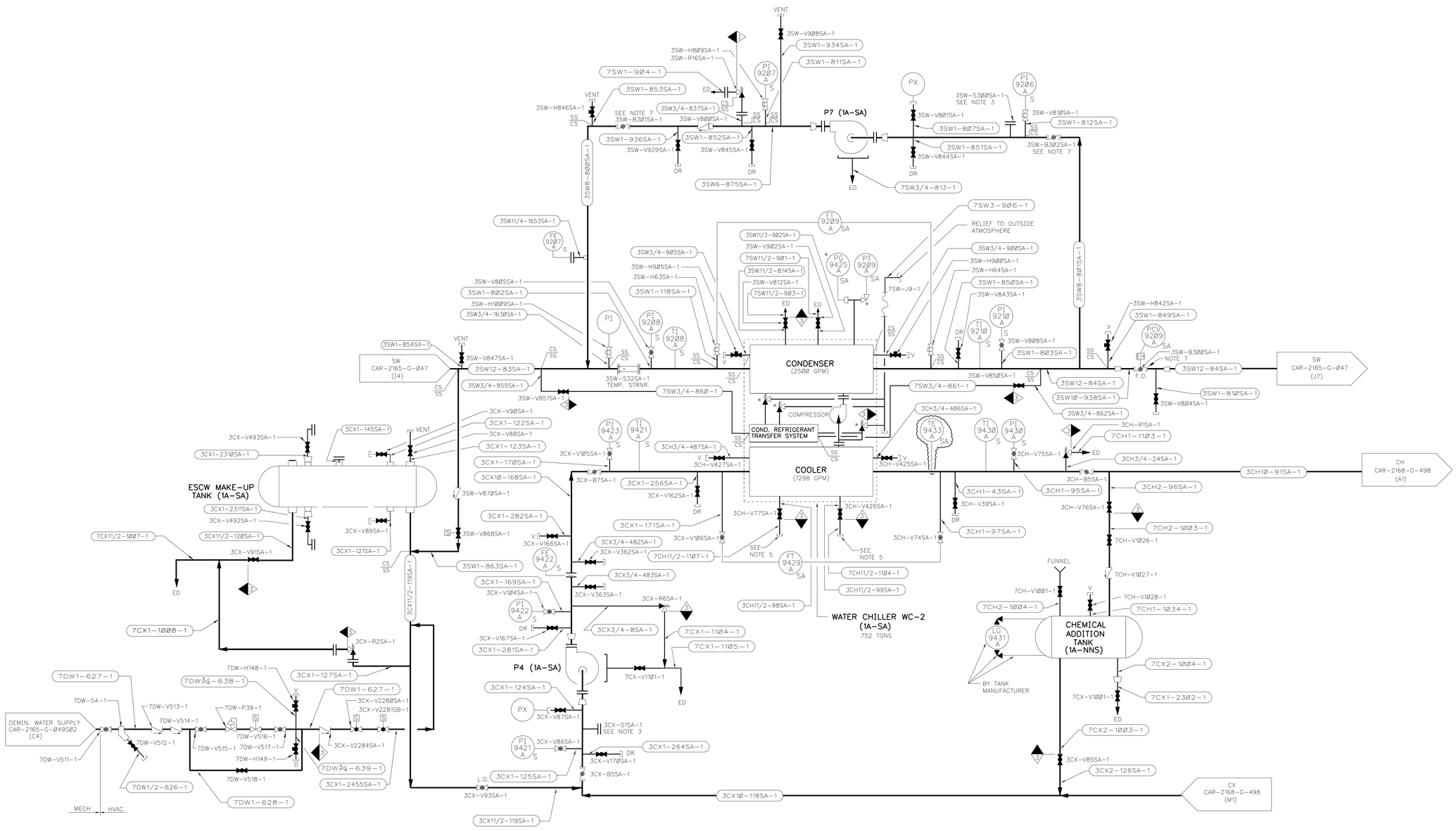

NOTES:

1. FOR GENERAL NOTES AND DETAILS SEE DWG CAR-2168-G-5Ø9 SØ1
2. FOR LEGEND AND SYMBOLS SEE DWG CAR-2168-G-528 SØ2
3. TEMPORARY STRAINERS USED FOR INITIAL FLUSHING, ARE TO BE REMOVED BEFORE START-UP.
4. FOR REFERENCE DWGS SEE DWG CAR-2168-G-498
5. HOSES WILL BE USED BETWEEN THE DRAIN LINES AND EQUIPMENT DRAINS WHEN NECESSARY.
6. (*) SYMBOL INDICATES VENDOR SUPPLIED ITEM.
7. VALVE IS STAINLESS STEEL.

REV	DATE	DESCRIPTION	DWN	CHK	DPE	DPPE
34		INCORPORATED: EC# 3Ø1132 (GIØ)	ELECTRONICALLY SIGNED			
33		INCORPORATED: EC# 95241 (F5,F6,F12,G9,GIØ,H5)	ELECTRONICALLY SIGNED			
32		INCORPORATED: EC# 92230 (C7,E6,E8,E11,E12,E13,F7,F8,FIØ,F11,F13)	ELECTRONICALLY SIGNED			
31		INCORPORATED: EC# 86759 (C7,C12)	ELECTRONICALLY SIGNED			
3Ø		INCORPORATED: EC# 79156 (C9,C11)	ELECTRONICALLY SIGNED			
29		INCORPORATED: EC# 73410 (F13,17,F18)	ELECTRONICALLY SIGNED			
28		INCORPORATED: EC# 7Ø557 (H5)	ELECTRONICALLY SIGNED			
27		INCORPORATED: EC# 65194 (D1-D5, E1-E5, F1-F6, G2-G5, H3-H5)	ELECTRONICALLY SIGNED			
26		INCORPORATED: EC# 61384 (E3, F1-F3) & EC# 62748 (C8)	ELECTRONICALLY SIGNED			
25	3-3-Ø5	INCORPORATED: EC# 6Ø417 (F3)	JAP	RPP	CRW	
24	1Ø-19-Ø4	INCORPORATED: EC# 58679 (F3, G3, I2-I4, J2-J4)	JAP	RPP	CRW	
23	11-16-ØØ	INCORPORATED: ESR 94-ØØ164 (EIØ,E13,F9,FIØ)	JWB	WFL	RPP FOR DLS	
22	11-6-96	INCORPORATED IN THIS REVISION: ESR-95Ø7Ø7 (D9,DIØ,E8-EIØ)	RPP	LLS	DLS	DLS
21	1-12-94	INCORPORATED IN THIS REVISION: PCR-6411 (F13,F15)	LLS	RPP	MMP	WAS
2Ø	11-3-93	INCORPORATED IN THIS REVISION: PCR-2512 FRØØ (G5)	GRS	LLS	MMP	WAS
19	12-1-92	INCORPORATED IN THIS REVISION: PCR-5534(J1-J5)	TRW	RPP	GOW	AMW
18	11-9-92	THIS DRAWING HAS BEEN ELECTRONICALLY REDRAWN WITH DESIGN CHANGE	LLS	RPP	GOW	MMP
		INCORPORATED: PCR-2512 (E1-E4, F1-F5, G1, G2)				

THIS DRAWING HAS BEEN PRODUCED AND IS CONTROLLED ON THE NED CAD/E SYSTEM. ANY REVISIONS TO THIS DOCUMENT SHOULD BE DONE USING THE CAD/E SYSTEM TO ASSURE PROPER CONTROL OF THE ELECTRONIC DRAWING DATABASE.

NUCLEAR SAFETY RELATED (Q-LIST)
YES ■ NO □ PARTIAL ■ F.P.-Q □ R.W.-Q □

DUKE ENERGY
NUCLEAR ENGINEERING DEPARTMENT - RALEIGH, N.C.

PLANT: HARRIS NUCLEAR PROJECT - UNIT 1
SCALE: NONE

TITLE: HVAC ESSENTIAL SERVICES CHILLED WATER CONDENSER FLOW DIAGRAM UNIT 1-SA

DWG NO. CAR-2168 G-498SØ2