5.0 REACTOR COOLANT SYSTEM AND CONNECTED SYSTEMS 1

5.1.0 SUMMARY DESCRIPTION 1

5.1.1 SCHEMATIC FLOW DIAGRAM 4

5.1.2 PIPING AND INSTRUMENTATION DIAGRAM 5

5.1.3 ELEVATION DRAWING 5

5.2.0 INTEGRITY OF REACTOR COOLANT PRESSURE BOUNDARY 5

5.2.1 COMPLIANCE WITH CODES AND CODE CASES 5

5.2.1.1 Compliance with 10 CFR Section 50.55a 5

5.2.1.2 Applicable Code Cases 6

5.2.2 OVERPRESSURE PROTECTION 7

5.2.2.1 Design Bases 7

5.2.2.2 Design Evaluations 8

5.2.2.3 Piping and Instrumentation Diagrams 11

5.2.2.4 Equipment and Component Description 11

5.2.2.5 Mounting of Pressure-Relief Devices 11

5.2.2.6 Applicable Codes and Classification 12

5.2.2.7 Material Specifications 12

5.2.2.8 Process Instrumentation 12

5.2.2.9 System Reliability 12

5.2.2.10 Testing and Inspection 12

5.2.2.11 RCS Pressure Control During Low Temperature Operation 13

5.2.3 MATERIALS SELECTION, FABRICATION, AND PROCESSING 15

5.2.3.1 Material Specification 15

5.2.3.2 Compatibility With Reactor Coolant 16

5.2.3.3 Fabrication and Processing of Ferritic Materials 18

5.2.3.4 Fabrication and Processing of Austenitic Stainless Steel 19

5.2.4 INSERVICE INSPECTION AND TESTING OF REACTOR COOLANT PRESSURE BOUNDARY 25

5.2.4.1 System Boundary Subject to Inspection 25

5.2.4.2 Accessibility 25

5.2.4.3 Examination Techniques and Procedures 28
5.2.4.4 Inspection Intervals 29
5.2.4.5 Examination Categories 29
5.2.4.6 Evaluation of Examination Results 29
5.2.4.7 System Leakage and Hydrostatic Tests 29
5.2.4.8 Code Exemptions 29
5.2.4.9 Relief Requests 29

5.2.5 DETECTION OF LEAKAGE THROUGH REACTOR COOLANT PRESSURE BOUNDARY 30
5.2.5.1 Design Bases 30
5.2.5.2 System Description 31
5.2.5.3 Primary Leakage Monitoring 34
5.2.5.4 Secondary Leakage Monitoring 37
5.2.5.5 Intersystem Leakage 37
5.2.5.6 System Sensitivity and Response Time 38
5.2.5.7 Seismic Capability of Systems 38
5.2.5.8 Indicators and Alarms 38
5.2.5.9 Design Evaluation 39
5.2.5.10 Testing 39
5.2.5.11 Technical Specifications 39

REFERENCES: SECTION 5.2 39

5.3 REACTOR VESSEL 40

5.3.1 REACTOR VESSEL MATERIALS 40
5.3.1.1 Material Specifications 40
5.3.1.2 Special Processes Used for Manufacturing and Fabrication 40
5.3.1.3 Special Methods for Nondestructive Examination 41
5.3.1.4 Special Controls for Ferritic and Austenitic Stainless Steels 43
5.3.1.5 Fracture Toughness 43
5.3.1.6 Material Surveillance 43
5.3.1.7 Reactor Vessel Fasteners 48
5.3.1.8 Pressurized Thermal Shock 49

5.3.2 PRESSURE – TEMPERATURE LIMITS 49

5.3.2.1 Limit Curves 49
5.3.2.2 Operating Procedures 50
5.3.3 REACTOR VESSEL INTEGRITY 51
5.3.3.1 Design 51
5.3.3.2 Materials of Construction 52
5.3.3.3 Fabrication Methods 52
5.3.3.4 Inspection Requirements 52
5.3.3.5 Shipment and Installation 52
5.3.3.6 Operating Conditions 53
5.3.3.7 Inservice Surveillance 54
REFERENCES SECTION 5.3: 55
5.4.1 REACTOR COOLANT PUPS 56
5.4.1.1 Design Bases 56
5.4.1.2 Pump Assembly Description 56
5.4.1.3 Design Evaluation 58
5.4.1.4 Tests and Inspections 63
5.4.1.5 Pump Flywheels 63
5.4.2 STEAM GENERATOR 64
5.4.2.1 Steam Generator Materials 65
5.4.2.2 Steam Generator In-service Inspection 67
5.4.2.3 Design Bases 67
5.4.2.4 Design Description 68
5.4.2.5 Design Evaluation 69
5.4.2.6 Tests and Inspection 70
5.4.3 REACTOR COOLANT PIPING 70
5.4.3.1 Design Bases 70
5.4.3.2 Design Description 71
5.4.3.3 Design Evaluation 73
5.4.3.4 Tests and Inspections 74
5.4.4 MAIN STEAMLINE FLOW RESTRICTOR 75
5.4.4.1 Design Bases 75
5.4.4.2 Design Description 75

5.4.4.3 Design Evaluation 75
5.4.4.4 Tests and Inspections 75
5.4.5 MAIN STEAM LINE ISOLATION SYSTEM 75
5.4.6 REACTOR CORE ISOLATION COOLING SYSTEM 75
5.4.7 RESIDUAL HEAT REMOVAL SYSTEM 76
5.4.7.1 Design Bases 76
5.4.7.2 System Design 77
5.4.7.3 Performance Evaluation 94
5.4.7. PREOPERATIONAL TESTING 95
5.4.8 REACTOR WATER CLEANUP SYSTEM 95
5.4.9 MAIN STEAM AND FEEDWATER PIPING 95
5.4.10 PRESSURIZER 96
5.4.10.1 Design Bases 96
5.4.10.2 Design Description 97
5.4.10.3 Design Evaluation 98
5.4.10.4 Tests and Inspections 100
5.4.11 PRESSURIZER RELIEF DISCHARGE SYSTEM 101
5.4.11.1 Design Bases 101
5.4.11.2 System Description 101
5.4.11.3 Safety Evaluation 102
5.4.11.4 Instrumentation Requirements 103
5.4.11.5 Inspection and Testing Requirements 103
5.4.12 VALVES 103
5.4.12.1 Design bases 103
5.4.12.2 Design description 104
5.4.12.3 Design evaluation 104
5.4.12.4 Tests and inspections 104
5.4.12.5 Reactor Coolant System High Point Vents 105
5.4.13 SAFETY AND RELIEF VALVES 109
5.4.13.1 Design Bases 109

5.4.13.2 Design Description 109
5.4.13.3 Design Evaluation 110
5.4.13.4 Tests and Inspections 110
5.4.14 COMPONENT SUPPORTS 111
5.4.14.1 Design Bases 111
5.4.14.2 Description 111
5.4.14.3 Evaluation 112
5.4.14.4 Tests and Inspections 113
REFERENCES: SECTION 5.4 113

5.0 REACTOR COOLANT SYSTEM AND CONNECTED SYSTEMS

5.1.0 SUMMARY DESCRIPTION *

The Reactor Coolant System (RCS) shown in Figures 5.1.2-1 and 5.1.2-2 consists of three similar heat transfer loops connected in parallel to the reactor pressure vessel. Each loop contains a reactor coolant pump, steam generator and associated piping and valves. In addition, the system includes a pressurizer, pressurizer relief and safety valves, interconnecting piping and instrumentation necessary for operational control. All the above components are located in the Containment Building.

During operation, the RCS transfers the heat generated in the core to the steam generators where steam is produced to drive the turbine generator. Borated demineralized water is circulated in the RCS at a flow rate and temperature consistent with achieving the reactor core thermal-hydraulic performance. The water also acts as a neutron moderator and reflector, and as a solvent for the neutron absorber (boron) used in chemical shim control.

The RCS pressure boundary provides a barrier against the release of radioactivity generated within the reactor, and is designed to ensure a high degree of integrity throughout the life of the plant.

RCS pressure is controlled by the use of the pressurizer where water and steam are maintained in equilibrium by electrical heaters and water sprays. Steam can be formed (by the heaters) or condensed (by the pressurizer spray) to minimize pressure variations due to contraction and expansion of the reactor coolant. Spring loaded safety valves and power operated relief valves are connected to the discharge lines from the pressurizer to the pressurizer relief tank, where discharged steam is condensed and cooled by mixing with water.

RCS temperature is controlled to a programmed average temperature by the combination of control rod position and coolant boron concentration. The programmed average temperature is a linear ramp from the no-load average temperature to the nominal full power average temperature based on the turbine First Stage pressure, also known as turbine inlet pressure.

The extent of the RCS is defined as:

a) The reactor vessel including control rod drive mechanism housings.

b) The reactor coolant side of the steam generators.

c) Reactor coolant pumps.

d) A pressurizer connected to one of the reactor coolant loops by a surge line.

e) The interconnecting piping, valves and fittings between the principal components listed above.

f) Safety and relief valves.

---

* Further information is contained in the TMI appendix

g) Pressurizer relief tank.

h) The piping, fittings, and valves leading to connecting auxiliary or support systems up to and including the second isolation valve (from high pressure side) on each line.

Reactor Coolant System Components

a) Reactor Vessel - The reactor vessel is cylindrical with a welded hemispherical bottom head and a removable, bolted, flanged and gasketed, hemispherical upper head. The vessel contains the core, core support structures, control rods, and other parts directly associated with the core.

   The vessel has inlet and outlet nozzles located in a horizontal plane just below the reactor vessel flange but above the top of the core. Coolant enters the vessel through the inlet nozzles and flows down the core barrel-vessel wall annulus, turns at the bottom and flows up through the core to the outlet nozzles.

b) Steam Generators - The steam generators are vertical shell and U-tube evaporators with integral moisture separating equipment. On the primary side, the reactor coolant flows through the inverted U-tubes, entering and leaving through the nozzles located in the hemispherical bottom head of the steam generator. Steam is generated on the shell side and flows upward through the moisture separators to the outlet nozzle at the top of the vessel.

c) Reactor Coolant Pumps - The reactor coolant pumps are identical single speed centrifugal units driven by air cooled, three phase induction motors. The shaft is vertical with the motor mounted above the pump. A flywheel on the shaft above the motor provides additional inertia to extend pump coastdown. The inlet is at the bottom of the pump and the discharge on the side.

d) Pressurizer - The pressurizer is a vertical, cylindrical vessel with hemispherical top and bottom heads, connected to the hot leg of one of the reactor coolant loops by a surge line. Electric heaters are installed through the bottom head of the vessel while the spray nozzle and the relief and safety valve connections are located in the top head of the vessel.

e) Piping - The reactor coolant loop piping is specified in sizes consistent with system requirements.

   The hot leg inside diameter is 29 in. and the inside diameter of the cold leg return line to the reactor vessel is 27-1/2 in. The inside diameter of piping between the steam generator and the pump suction is increased to 31 in. to reduce pressure drop and improve flow conditions to the pump suction.

f) Safety and Relief Valves - The pressurizer safety valves are of the totally enclosed pop-type. The valves are spring loaded, self-activated with backpressure compensation. The power operated relief valves limit system pressure for large power mismatch. They are operated automatically or by remote manual control. Remotely operated valves are provided to isolate the inlet to the power operated relief valves if excessive leakage occurs.

g) Pressurizer Relief Tank - The pressurizer relief tank is a horizontal, cylindrical vessel with elliptical heads. Steam from the pressurizer safety and relief valves is discharged into the pressurizer relief tank through a sparger pipe under the water level. This condenses and cools the steam by mixing it with water that is near ambient temperature.

Reactor Coolant System Performance Characteristics - Tabulations of important design and performance characteristics of the RCS are provided in Table 5.1.0-1.

a) Reactor Coolant Flow - The reactor coolant flow, a major parameter in the design of the system and its components, is established by a detailed design procedure supported by experimental component hydraulics data and operating plant performance data. Data from Harris and other operating plants indicate that the actual flow has been well above the flow specified for the thermal design of the plant. By applying the design procedure described below, it is possible to specify the expected operating flow with reasonable accuracy.

   Four reactor coolant flow rates are identified for the various plant design considerations. The definitions of these flows are presented in the following paragraphs.

b) Best Estimate Flow - The best estimate flow is considered to be the most likely value for the actual plant operating condition. This flow is based on the best estimate of the reactor vessel, steam generator and piping flow resistances, and on the best estimate of the reactor coolant pump head flow capacity, with no uncertainties assigned to either the system flow resistance or the pump head. System pressure drops, based on best estimate flow, are presented in Table 5.1.0-1.

   Although the best estimate flow is the most likely value to be expected in operation, more conservative flow rates are applied in the thermal and mechanical designs. The best estimate flow provides the basis for establishing these other more conservative flows required for system and component design.

c) Thermal Design Flow - Thermal design flow is the basis for the NSSS system performance, some accident analyses, the steam generator thermal performance, and the nominal plant parameters used throughout the design. The thermal design flow is approximately 7.4 percent less than the best estimate flow at 10% Steam Generator Tube Plugging (SGTP) and 9.4% less than best estimate flow at 0% SGTP. The actual flow is measured each cycle by precision calorimetric and verified periodically to be within Technical Specification limits, including measurement uncertainty.

   A tabulation of important RCS design and performance parameters based on the thermal design flow is provided in Table 5.1.0-1.

d) Technical Specification Minimum Flow - The technical specification minimum flow is the basis for a number of the core performance and accident analysis (by SPC) and corresponds to a value of 293540 GPM. This value is higher than the more conservative thermal design flow, but as noted in (c) above, is verified periodically to be less than the measured flow by at least the measurement uncertainty.

e) Mechanical Design Flow - Mechanical design flow is the conservatively high flow used in the mechanical design of the reactor vessel internals and fuel assemblies. The mechanical design flow, which is based on a reduced system resistance and on increased pump head

capability, is approximately 4.8 percent greater than the best estimate flow at 0% SGTP. Mechanical design flow values are given in Table 5.1.0-1.

Interrelated Performance and Safety Functions - The interrelated performance and safety functions of the RCS and its major components are listed below:

a) The RCS provides sufficient heat transfer capability to transfer the heat produced during power operation and when the reactor is subcritical, including the initial phase of plant cooldown, to the steam and power conversion system.

b) The RCS provides sufficient capability to transfer the heat produced during the subsequent phase of plant cooldown and cold shutdown to the residual heat removal system.

c) The RCS heat removal capability under power operation and normal operational transients, including the transition from forced to natural circulation, assures no fuel damage within the operating bounds permitted by the reactor control and protection systems.

d) The RCS provides the water used as the core neutron moderator and reflector and as a solvent for chemical shim control.

e) The RCS maintains the homogeneity of soluble neutron poison concentration and rate of change of coolant temperature such that uncontrolled reactivity changes do not occur.

f) The reactor vessel is an integral part of the RCS pressure boundary and is capable of accommodating the temperatures and pressures associated with the operational transients. The reactor vessel functions to support the reactor core and control rod drive mechanisms.

g) The pressurizer maintains the system pressure during operation and limits pressure transients. During the reduction or increase of plant load, reactor coolant volume changes are accommodated in the pressurizer via the surge line.

h) The reactor coolant pumps supply the coolant flow necessary to remove heat from the reactor core and transfer it to the steam generators.

i) The steam generators provide high quality steam to the turbine. The tube and tubesheet boundary are designed to prevent the transfer of activity generated within the core to the secondary system.

j) The RCS piping serves as a boundary for containing the coolant under operating temperature and pressure conditions and for limiting leakage (and activity release) to the containment atmosphere. The RCS piping contains demineralized borated water which is circulated at the flow rate and temperature consistent with achieving the reactor core thermal and hydraulic performance.

5.1.1 SCHEMATIC FLOW DIAGRAM

The RCS is shown schematically in Figure 5.1.1-1 (process flow diagram). The notes to this figure include a tabulation of principal system pressures, temperatures, and flowrates under steady state full power operating conditions.

5.1.2 PIPING AND INSTRUMENTATION DIAGRAM

A piping and instrumentation diagram of the RCS is shown in Figures 5.1.2-1 and 5.1.2-2. The diagrams show the extent of the system located within the Containment, and the points of separation between the RCS, the secondary (heat utilization) system, and the reactor auxiliary systems.

5.1.3 ELEVATION DRAWING

Major components of the Reactor Coolant System are surrounded by concrete structures, which provide support plus shielding and missile protection. Scaled plan and elevation views of the reactor coolant loops, illustrating the principal dimensions of this piping and associated equipment in relationship to the surrounding concrete structures are provided on drawing Figure 5.1.3-1, reactor coolant loop piping and connections, Unit 1.

5.2.0 INTEGRITY OF REACTOR COOLANT PRESSURE BOUNDARY

This section presents a discussion of the measures employed to provide and maintain the integrity of the reactor coolant pressure boundary (RCPB) for the plant design lifetime. In this context, the RCPB is as defined in Section 50.2 of 10 CFR 50. Since other sections of the FSAR already describe the components of these auxiliary fluid systems in detail, the discussions in this section will be limited to the components of the RCS as defined in Section 5.1, unless otherwise noted.

For additional information on the RCS and for components which are part of the RCPB (as defined in 10 CFR 50) but are not described in this section, refer to the following sections:

Section 6.3 - For discussions of the RCPB components which are part of Emergency Core Cooling System.

Section 9.3.4 - For discussions of the RCPB components which are part of the Chemical and Volume Control System.

Sections 3.9.1 and 3.9.3 - For discussions of the design loadings, stress limits, and analyses applied to the RCS and ASME Code Class 1 components.

Section 3.9.3 - For discussions of the design loadings, stress limits and analyses applied to ASME Code Class 2 and 3 components.

The scope of the RCS, as discussed in this section, is as defined in Section 5.1. When the term RCPB is used in this section, its definition is that of Section 50.2 of 10 CFR 50.

5.2.1 COMPLIANCE WITH CODES AND CODE CASES

5.2.1.1 Compliance with 10 CFR Section 50.55a

RCS components are designed and fabricated in accordance with the rules of 10 CFR 50.55a, "Codes and Standards," with the exceptions noted in the following paragraphs. The addenda of the ASME Code applied in the design and fabrication of each component are listed in Table 5.2.1-1.

The exceptions, not in strict compliance with the 10 CFR 50.55a rules are:

1) The reactor vessel which is designed and fabricated to ASME Section III, 1971 Edition through Winter 1971. (Summer 1972 required by 10 CFR 50.55a).

2) Reactor coolant pumps which are designed and fabricated to ASME Section III, 1971 Edition through Summer 1972. (Winter 1972 required by 10 CFR 50.55a).

3) Class 1 control valves which are designed and fabricated to ASME Section III, 1971 Edition through Summer 1972. (Winter 1972 required by 10 CFR 50.55a).

These exceptions were approved by the NRC in the SHNPP Safety Evaluation Report, Supplement 3 (July 30, 1977). The primary reason for taking exception to 10 CFR 50.55a was that the issuance of the construction permit (CP) was delayed beyond the originally anticipated CP date. The purchase orders for this equipment were placed in advance of the CP due to the length of component design and manufacturing lead time.

In the case of the reactor vessel, the applicable ASME Code has not been updated; however, where possible additional fracture toughness tests required by later ASME Codes have been performed in order to address the requirements of 10 CFR 50 Appendix G (effective August 16, 1973). The results of fracture toughness tests are discussed in Section 5.3. It should be noted that the actual hardware configuration and material selection would not have been changed by upgrading to a later ASME Code. Thus, the reactor vessel, although originally not in strict accordance with 10 CFR 50.55a, is acceptable as built to ASME Section III, 1971 Edition through Winter 1971. A baseline Appendix G calculation was created for the reactor vessel and then modified to account for the uprating changes. The reactor vessel has been shown to be in compliance with the fracture integrity design requirements of Appendix G after completion of the steam generator replacement and uprating.

Updating the reactor coolant pumps and control valves to a later ASME Code Addenda would require additional cost and administrative burden without a compensating increase in the level of quality or safety. The actual hardware configuration would not be changed by upgrading to a later ASME Code. Thus, the reactor coolant pumps and Class 1 control valves, although not in strict accordance with 10 CFR 50.55a, are acceptable as built to ASME Section III, 1971 Edition through Summer 1972.

5.2.1.2 Applicable Code Cases

Compliance with Regulatory Guides 1.84 and 1.85 is discussed in Section 1.8. The following discussion addresses only unapproved or conditionally approved code cases (per Regulatory Guides 1.84 and 1.85) used on Class 1 primary components.

Code Case N-20-3 applies to the manufacture and procurement of Alloy 690 thermally treated heat transfer tubing is used in the steam generator.

Code Case N-474-2 applies to the use of UNS N06690 (SA-564) forgings used in the steam generator.

In addition, other ASME Code Cases were used in the construction of Quality Group A components within the reactor coolant pressure boundary. Table 5.2.1-2 identifies the Code Cases and the components to which they apply.

5.2.2 OVERPRESSURE PROTECTION

RCS overpressure protection during normal plant operation is accomplished by the utilization of pressurizer safety valves along with the Reactor Protection System and associated equipment. Combinations of these systems provide compliance with the overpressure requirements of the ASME Boiler and Pressure Vessel Code, Section III, paragraphs NB 7300 and NC 7300, for pressurized water reactor systems.

The description of the transients described in Section 5.2.2.1 and 5.2.2.2 are analyses that were performed for "sizing" and initial verification of the safety relief valves performed prior to plant operation. This information is retained in Section 5.2.2.1 and 5.2.2.2 for historical purposes.

The fuel cycle by cycle verification of overpressure protection is performed in FSAR Chapter 15. The actual instrument loop uncertainties are verified to be at or within the values used in FSAR Section 15.2.

Auxiliary or emergency systems connected to the RCS are not utilized for RCS overpressurization protection.

RCS pressure control during low temperature operation is described in Section 5.2.2.11.

5.2.2.1 Design Bases

Overpressure protection is provided for the RCS by the pressurizer safety valves which discharge to the pressurizer relief tank by a common header as described by Section 5.4.11. The transient which determines the design requirements for the Reactor Coolant System overpressure protection is a complete loss of steam flow to the turbine with credit taken for steam generator safety valve operation. Consistent with WCAP-7769, Rev. 1, the original sizing of the pressurizer safety valves assumes that main feedwater flow is maintained, and no credit is taken for reactor trip or the operation of the following:

a) Pressurizer power operated relief valves

b) Steam line power operated relief valves

c) Steam Dump System

d) Reactor Control Rod System

e) Pressurizer level control system

f) Pressurizer spray valves

The SGR/PUR sizing evaluation assumes that main feedwater flow is lost and that a reactor trip does occur. The other assumptions originally used remain valid. For this transient, the peak RCS and peak steam system pressure must be limited to 110 percent of their respective design

values. Assumptions for the overpressure transient analysis include: 1) the plant is operating at the power level corresponding to the engineered safeguards design rating and, 2) the RCS average temperature and pressure are at their maximum values. Instrumentation accuracy will be verified upon calibration per approved maintenance. These are the most limiting assumptions with respect to RCS overpressure. Nominal values for the average RCS temperature and pressure assumed for accidents are 588.8°F and 2250 psia. The errors assumed are 2 percent on power, 5.8°F on temperature, and 30 psia on pressure. The maximum allowable error for each instrument loop will be verified in the associated loop calibration instruction.

A separate pressurizer safety valve sizing evaluation is performed to account for an increased Main Steam Safety Valve (MSSV) setpoint tolerance to ±3% (Reference 5.2.2-5). Like the SGR/PUR sizing evaluation, the sizing evaluation with MSSVs lift setpoints drifted +3% assumes that main feedwater is lost at the time of turbine trip and that the reactor trips on the second RPS signal (i.e., high pressurizer water level trip). The other assumptions used in the original analysis remain valid. The analysis is performed at the Measurement Uncertainty Recapture (MUR) power level plus uncertainty, and plant initial conditions are conservatively biased to account for instrument uncertainty.

The initiating event in the FSAR Chapter 15 analysis for the primary side overpressure protection is a turbine trip event (Section 15.2.3), which assumes that the main feedwater is lost at the time of turbine trip. Similarly, the initiating event for the overpressure protection report (as required by ASME Code Section III, NB-7300) for Harris is also a turbine trip event and assumes that the main feedwater is lost at the time of turbine trip. The sizing analysis for the pressurizer safety valve at SGR/Uprating conditions also conservatively assumed that the main feedwater is lost at the time of turbine trip. Postulated events and transients on which the design requirements of the overpressure protection system are based, are discussed in Reference 5.2.2-1.

Overpressure protection for the shell side of the steam generators and the main steam line up to the main steam isolation valves is provided by the 15 steam generator safety valves, 5 on each main steam line. The steam generator safety valve capacity is based on providing enough relief to remove 105 percent of the rated NSSS steam flow, 13.51 x 10^6 lb./hr. This must be done by limiting main steam system pressure to less than 110 percent of the steam generator shell side design pressure, 1305 psig. Since the maximum flow rate at 1278 psig for all 15 steam generator safety valves is 14.55 x 106 lb./hr., and the nominal flow from each steam generator is 4.29 x 10^6 lb./hr. at 100 percent power and 4.50 x 10^6 lb/hr at 105 percent power, the minimum flowrate of 13.51 x 10^6 lb./hr. can be maintained even in the event of a single failure. The design parameters of the steam generator safety valves are given in Table 10.3.1-1. The fuel cycle by cycle verification of overpressure protection is contained in FSAR Section 15.2.

5.2.2.2 Design Evaluations

The relief capacities of the pressurizer and steam generator safety valves are determined from the postulated overpressure transient conditions in conjunction with the action of the Reactor Protective System. An evaluation of the functional design of the overpressure protection system and an analysis of the capability of the system to perform its function is presented in Reference 5.2.2-1. The report describes in detail the types and number of pressure relief devices employed, relief device description, locations in the systems, reliability history, and the details of the methods used for relief device sizing based on typical worst case transient conditions and

analysis data for each transient condition. The description of the analytical model used in the analysis of the overpressure protection system and the basis for its validity is discussed in Reference 5.2.2-2.

Reference 5.2.2-1 differentiates between the loss of load transient with the steam dump and RCS pressure control systems functioning and the turbine trip event without direct reactor trip. That the FSAR depicts a higher peak pressure than that shown in Reference 5.2.2-1 is due to rod motion delay time. Reference 5.2.2-1 assumed one second for rod motion following reactor trip setpoint versus two seconds assumed for the FSAR (this analysis was performed in support of Cycle 1 operation and is retained here for historical purposes).

Numerous analyses have been performed in support of the EPRI Safety and Relief Valve Test Program (NUREG-0737, Item II.D.1) wherein RCS overpressure protection was addressed similar to that in Reference 5.2.2-1. Indeed, this particular transient was analyzed for the enveloping (worse case) 4 loop plant and presented in Reference 5.2.2-3.and 5.2.2-3A. For steam generator replacement/power uprate conditions, the Chapter 15 events for Inadvertent Operation of ECCS (15.5.1) and for Main Feedwater Line Break (Chapter 15.2.8) were analyzed (Reference 5.2.2-3A) to determine bounding conditions specific to Harris Plant.

The maximum pressurizer pressure reported for this limiting event, 4-loop plant, was 2556 psia which agrees quite well with the FSAR listed value (approximately 2555 psia). For the enveloping plant, the analysis conducted with the reactor tripping on the second RPS signal shows a peak pressurizer pressure of 2565 psia. The difference between the two reactor trip points (approximately two seconds) is diluted considering safety valve sizing and the assumptions for safety valve flow rate versus pressure used in the analyses (linear, from 0 to 100 percent over the pressure range of 2500 to 2575 psia).

Figure 2-1 of Reference 5.2.2-1 shows that only 90 percent of safety valve flowrate is required to turn around the overpressure transient assuming no reactor trip. With 100 percent of safety valve capacity, the pressurizer pressure peaks at less than 2575 psia.

Table 5.2.2-1 provides a comparison of the SHNPP parameters to those listed in Reference 5.2.2-1 (WCAP-7769) to show that the difference does not affect the conservatism of Reference 5.2.2-1 results for overpressure protection.

With reactor trip occurring at the first reactor trip setpoint, approximately 60 percent of total safety valve flow rate was required to turn around the overpressure transient (see Shearon Harris Nuclear Power Station Overpressure Protection Report). The analyses described in this chapter were performed in support of Cycle 1 operation and are retained here for historical purposes only.

5.2.2.2.1 Evaluation Of Pressurizer SRV for SGR/PUR

For steam generator replacement/power uprate conditions, additional analyses were performed to ensure the continued qualification of the pressurizer Safety Relief Valves. The following discussion provides the basis for continued SRV qualification and operability for the Main Feedline Break (MFLB) and Inadvertent Operation of Emergency Core Cooling System (IOECCS) events.

The original MFLB and IOECCS SRV qualification and operability analysis and licensing basis was reviewed and accepted by the NRC in their letter to CP&L, R. A. Becker to Lynn W. Eury, dated May 31, 1989, "Evaluation of Carolina Power and Light Company's Shearon Harris, Unit 1, Plant Specific Submittals In Response to NUREG-0737, TMI Action Plan Requirement, Item II.D.I. (TAC No.63565)."

The steam generator replacement/power uprate MFLB and IOECCS analysis (Reference 5.2.2-3B) used for SRV qualification assumes plant equipment operation and equipment failures as originally evaluated for HNP initial plant operation with the standard FSAR analyses performed at that time.

(a) Main FeedLine Break (MFLB):

Initial plant conditions and equipment performance were assumed which reflect the Steam Generator Replacement and Power Uprate configuration. Other conditions include: offsite power available, no pressurizer sprays operating, loss of turbine-driven auxiliary feedwater pump and one degraded high head safety injection pump operating. Operator action is assumed to terminate high head safety injection (HHSI) and control auxiliary feedwater (AFW) in approximately 30 minutes. Operator actions to terminate HHSI, control AFW, and initiate plant recovery actions limit the duration of SRV cycling on liquid relief.

Safety Injection termination occurs at 1840 seconds into the event. The pressurizer becomes water solid at 1989 seconds. Liquid relief is postulated to occur for a short period of time subsequent to safety injection termination. Up to approximately 35 minutes into the event, the analysis results indicate a maximum pressure upstream of the SRVs of approximately 2550 psia (safety valve setpoint plus 1% tolerance and 1% setpoint shift), a maximum pressurization rate of 7.4 psi/sec, a SRV inlet temperature range of approximately 606°F to 621°F, and a liquid surge rate into the pressurizer of about 170 gpm.

Each of the above parameters were reviewed and compared to EPRI test data (referenced in the above NRC evaluation) for the Crosby 6M6 safety valves. The analysis results are either bounded by the EPRI test data or are closely represented by the test data. Based on the analysis results and the EPRI test data, the pressurizer SRVs are expected to operate successfully during a liquid discharge for the MFLB event.

(b) Inadvertent Operation of Emergency Core Cooling System (IOECCS):

Initial plant conditions and equipment performance were assumed which reflect the Steam Generator Replacement and Power Uprate configuration. Other conditions include: offsite power available, pressurizer sprays available, pressurizer PORV's available until motive force depletion, nominal initial pressurizer water level and two high head safety injection pumps operating. Operator action is not assumed to mitigate the event with respect to FSAR Section 15.5.1 criteria during the 1200 sec's (20 minutes) transient. However, plant recovery actions, including termination of high head safety injection (HHSI), are expected to occur after the transient is terminated to limit the duration of SRV cycling on liquid relief.

The IOECCS event, by definition, initiates safety injection at the beginning of the event (since ECCS includes HHSI). The pressurizer becomes water solid at about 918.5 seconds. Liquid relief through the SRV's is postulated to occur from about 945 seconds to event termination at 1200 seconds, when operator recovery actions are expected to occur and include termination of

HHSI. Up until event termination, the analysis results indicate a maximum pressure upstream of the SRVs of approximately 2550 psia (safety valve setpoint plus 1% tolerance and 1% setpoint shift), a maximum pressurization rate of 6.3 psi/sec, a SRV inlet temperature range of approximately 564°F to 670°F, and a liquid surge rate into the pressurizer of about 580 gpm.

Each of the above parameters were reviewed and compared to EPRI test data (referenced in the above NRC evaluation) for the Crosby 6M6 safety valves. The analysis results are either bounded by the EPRI test data or are shown to be acceptable. Based on the analysis results and the EPRI test data, the pressurizer SRVs are expected to operate successfully and meet event acceptance during a liquid discharge for the IOECCS event.

In summary, the pressurizer safety valve adequacy for operation with expected conditions for a Main Feed Line Break event and the Inadvertent Operation of Emergency Core Cooling System event were reviewed utilizing the original licensing basis assumptions and a Steam Generator Replacement/Power Uprate configuration. These safety valves are expected to remain qualified to open and close as necessary to satisfy event acceptance criteria.

For an MSSV setpoint tolerance of ±3%, results from the pressurizer safety valve sizing evaluation demonstrate the safety valves are adequately sized by maintaining primary and secondary system pressures below 110 percent of their respective design values.

5.2.2.3 Piping and Instrumentation Diagrams

The piping and instrumentation diagrams which show the number and location of all components in the overpressure protection system for the Reactor Coolant System and the

Main Steam Supply System are contained on Figures 5.1.2-2 and 10.1.0-1, respectively. Schematic drawings of the pressurizer safety valves and steam generator safety valves are located in Section 5.4.13.

5.2.2.4 Equipment and Component Description

The operation and significant design parameters of the pressurizer safety valves are discussed in Section 5.4.13. The pressure transients which cause the valve to lift are: loss of load, feedwater line break, reactor coolant pump locked rotor, and control rod ejection. These transients are discussed in further detail in Section 3.9.1 and Chapter 15. The impact of the pressurizer safety valves setpoint shift outlined in WCAP-12910 is addressed in Chapter 15.

The operation and significant design parameters of steam system safety valves are presented in Section 10.3.2. A schematic diagram of the steam generator safety and power operated valves is located in Section 5.4.13.

5.2.2.5 Mounting of Pressure-Relief Devices

Design and installation details for mounting of pressure-relief devices are discussed in Section 3.9.3.3.

5.2.2.6 Applicable Codes and Classification

The NSSS for SHNPP complies with the requirements of ASME Boiler and Pressure Vessel Code, Section III, paragraphs NB 7300 (Overpressure Protection Report) and NC-7300 (Overpressure Protection Analysis).

Piping, valves and associated equipment used for overpressure protection are classified in accordance with ANS-N18.2, "Nuclear Safety Criteria for the Design of Stationary Pressurized Water Reactor Plant." These safety class designations are delineated on Table 3.2.1-1 and shown on Figures 5.1.2-1 and 5.1.2-2.

For further information, refer to Section 3.9.

5.2.2.7 Material Specifications

Material specifications for the pressurizer safety and power operated relief valves are discussed in Section 5.2.3.

Section 10.3.2.2 and 10.3.2.3 describe the material specification of steam system safety and power operated relief valves.

5.2.2.8 Process Instrumentation

Each pressurizer safety valve discharge line incorporates a control board temperature indicator and alarm to notify the operator of steam discharge due to either leakage or actual valve operation. For a further discussion on process instrumentation associated with the system, refer to Chapter 7.

Process instrumentation of the steam system power operated relief valves is discussed in Chapter 7. No instrumentation is provided with the main steam safety valves.

5.2.2.9 System Reliability

The reliability of the pressurizer pressure relieving devices is discussed in Section 4 of Reference 5.2.2-1. The reliability of the steam system safety and power operated relief valves is discussed in Section 10.3.

5.2.2.10 Testing and Inspection

Testing and inspection of the overpressure protection components are discussed in Section 5.4.13.4 and Chapter 14.

Testing and inspection of the steam system safety and power operated relief valves is discussed in Section 10.3.4.

Instructions for preoperational tests to verify the accuracy of instrumentation systems used to initiate overpressure protection are being prepared.

5.2.2.11 RCS Pressure Control During Low Temperature Operation

Administrative procedures are available to aid the operator in controlling RCS pressure during low temperature operation. However, to provide a back-up to the operator and to minimize the frequency of RCS overpressurization, an automatic system is provided to mitigate any inadvertent pressure excursion.

Protection against such overpressurization events is provided through use of two PORV's to mitigate any potential pressure transients. Analyses have shown that one PORV is sufficient to prevent violation of allowable limits due to anticipated mass and heat input transients. The mitigation system is required only during low temperature water solid operation and is automatically enabled after the MCB LTOP select switch is placed in the "normal" position in modes 4, 5, and 6.

5.2.2.11.1 System operation

Two pressurizer power operated relief valves are each supplied with actuation logic to ensure than an automatic and independent RCS pressure control back-up feature is available to the operator during low temperature operations. This system provides the capability for additional RCS inventory letdown, thereby maintaining RCS pressure within allowable limits. Refer to Sections 5.4.7, 5.4.10, 5.4.13, 7.7, and 9.3.4 for additional information on RCS pressure and inventory control during other modes of operation.

The basic function of the system logic is to continuously monitor RCS temperature and pressure conditions whenever plant operation is at low temperatures. An auctioneered system temperature will be continuously converted to an allowable pressure and then compared to the actual RCS pressure. The system logic will first annunciate a main control board alarm whenever the measured pressure approaches within a pre-determined amount, thereby indicating a pressure transient is occurring. On a further increase in measured pressure, an actual signal is transmitted to the power operated relief valves when required to mitigate pressure transient. Refer to Sections 7.6.1.11 and 7.6.2.5 for a further discussion on LTOP control and logic.

The relief capability during low temperature operation is provided by utilizing one of two pressure power-operated relief valves.

The setpoints for the low temperature overpressure system are determined such that the reactor vessel's Appendix G curve is not exceeded. These setpoints include consideration for heat input and safety injection mass input overpressure transients. Note that Technical Specifications limit the number of charging/SI pumps during low temperature operation to one pump.

5.2.2.11.2 Evaluation of low temperature overpressure transients - pressure transient analyses

ASME Section XI, Appendix G, establishes procedures and limits for RCS Pressure and Temperature primarily for low temperature conditions to provide protection against non-ductile failure. The Low Temperature Overpressure Protection System (LTOPS) assures that these limits are not exceeded when it is enabled at low temperatures. This temperature is defined in Reference 5.2.2-4 and is conservatively selected at ≤325°F.

Transient analyses were performed to determine the maximum pressure for the postulated worst case mass input and heat input events.

The mass input transient analysis was performed assuming the inadvertent actuation of a single safety injection pump, which, in combination with other misoperation, pressurizes the RCS. The mass input was evaluated assuming the highest capacity single safety injection pump in the SI mode.

The heat input analysis was performed for an incorrect reactor coolant pump start assuming that the RCS was water solid at the initiation of the event and that a 50°F mismatch existed between the RCS (250°F) and the secondary side of the steam generators (300°F). Although the analysis considered a range of RCS temperatures, at lower temperatures, the mass input case is the limiting transient condition. Both analyses took into account the single failure criteria and therefore, the operation of one PORV was assumed to be available for pressure relief. The evaluation of the transient results concludes that the allowable limits will not be exceeded and therefore will not constitute an impairment to vessel integrity and plant safety.

5.2.2.11.3 Operating basis earthquake evaluation

A fluid systems evaluation has been performed to analyze the potential for overpressure transients following an OBE. The basis of the evaluation assumes that the plant air system is inoperable since it is not seismically qualified. The results of the evaluation follow and demonstrate that overpressure transients following an OBE are not a concern.

1. A loss of plant air during the first part of plant cooldown just prior to placing the RHRS on line at 350F (i.e., decay heat removal via the steam generators) would cause the low pressure letdown isolation valves to fail closed and the charging flow control valve to fail open. These conditions would create a net mass addition to the RCS thereby causing the pressure to increase. However, the pressure increase would be acceptable since the pressurizer safety valves would limit system pressure (2485 psig) within allowable values (Technical Specification 3/4.4.9.3).

2. A loss of plant air during the second part of plant cooldown (i.e. decay heat removal via the RHRS and a temperature less than 350F) would cause the low pressure letdown valve to fail closed and charging flow control valve to fail open similar to that discussed above. These conditions would create a net mass addition to the system which would be relieved by the RHR relief valves which are set at 450 psig and thus maintain the pressure within allowable values.

   For the various modes described above, the pressurizer safety and RHRS relief valves provide pressure relief for the postulated transients following an OBE and thus maintain the primary system within the allowable pressure/temperature limits.

5.2.2.11.4 Administrative procedures

Although the RCS pressure and inventory control systems are designed to maintain RCS pressure within allowable limits, administrative procedures have been provided for minimizing the potential for any transient that could actuate the overpressure relief system. The following discussion highlights these procedural controls, listed in hierarchy of their function for preventing RCS cold overpressurization transients:

Of primary importance is the basic method of operation of the plant. Normal plant operating procedures will maximize the use of a pressurizer cushion (steam bubble) during periods of low pressure, low temperature operation. This cushion will dampen the plant's response to potential transient generating inputs, thereby providing easier pressure control with the slower response rates.

An adequate cushion substantially reduces the severity of some potential transients such as reactor coolant pump induced heat input, and slows the rate of pressure rise for others. In conjunction with the previously discussed alarms, this provides reasonable assurance that most potential transients can be terminated by operator action before the overpressure relief system actuates.

However, for those modes of operation when water solid operation may still be possible, SHNPP operating procedures include precautions that minimize the potential for developing an overpressurization transient.

The purpose of the manual block of the LTOP system in Modes 1, 2, and 3 is to prevent inadvertent opening of the PORV's during a MSLB or SGTR event if the RCS temperature were to decrease below the LTOP arming setpoint.

5.2.3 MATERIALS SELECTION, FABRICATION, AND PROCESSING

5.2.3.1 Material Specification

Typical material specifications used for the principal pressure retaining applications in ASME Class 1 primary components and for ASME Class 1 and 2 auxiliary components in systems required for reactor shutdown and for emergency core cooling are listed in Table 5.2.3-1. Typical material specifications used for the reactor internals required for emergency core cooling, for any mode of normal operation, for postulated accident conditions, and for core structural load bearing members are listed in Table 5.2.3-2.

Identification of the actual materials used is available in the SHNPP QA records. The materials utilized conform to the applicable ASME Code.

The welding materials used for joining the ferritic base materials of the RCPB conform to or are equivalent to ASME Material Specifications SFA 5.1, 5.2, 5.5, 5.17, 5.18, and 5.20. They are qualified to the requirements of the ASME Code, Section III.

The welding materials used for joining the austenitic stainless steel base materials of the RCPB conform to ASME Material Specifications SFA 5.4 and 5.9. They are qualified to the requirements of the ASME Code, Section III.

The welding materials used for joining nickel-chromium-iron alloy in similar base material combination and in dissimilar ferritic or austenitic base material combination conform to ASME Material Specifications SFA 5.11 and 5.14. They are qualified to the requirements of the ASME Code, Section III.

The Shearon Harris Nuclear Power Plant complies with the recommendations of Regulatory Guide 1.43 (refer to Section 1.8). To ensure guide compliance, welding processes that induce underclad cracking by generating excessive heating and promoting grain coarsening in the base

metal are not used. The reactor vessel heads and shell courses were constructed of SA 533 Grade B Class 1 plate material made to a fine grain practice. The closure head and vessel flanges and the primary nozzles were constructed of SA 508 Class 2 forging material. This plate and forging material was clad utilizing the shielded metal arc and the two-wire submerged arc processes which are considered low heat input processes. Since the plate material and the low heat input clad processes used on forging material are not subject to restrictions by the guide, the vessel is in compliance with Regulatory Position C.1. Regulatory Position C.2 is not applicable in this case. The reactor vessel fabricator monitored and recorded the weld parameters to verify compliance with the parameters established by the procedure qualifications of Regulatory Position C.3. The steam generator and the pressurizer parts which are clad are constructed of SA-533 Grade A Class 2 and SA-508 Class 2a, or 3a steels. These materials are made to fine grain practice and welding is done with low heat input techniques.

5.2.3.2 Compatibility With Reactor Coolant

5.2.3.2.1 Chemistry of reactor coolant

The RCS water chemistry is controlled to minimize corrosion. A routinely scheduled analysis of the coolant chemical composition is performed to verify that the reactor coolant chemistry meets chemistry specifications. The RCS chemistry specifications are based on Westinghouse Chemistry Criteria and Specifications with exemptions allowed by FSAR Section 9.5.3.1.

The Chemical and Volume Control System provides a means for adding to the RCS the chemicals which control the pH of the coolant during pre-startup testing and subsequent operation, scavenge oxygen from the coolant during heatup, and control radiolysis reactions involving hydrogen, oxygen and nitrogen during all power operations subsequent to startup.

The specified pH control chemical is lithium hydroxide monohydrate, enriched in lithium-7 isotope to 99.9. This chemical is chosen for its compatibility with the materials and water chemistry of borated water/stainless steel/zirconium/inconel systems. In addition, lithium-7 is produced in solution from the neutron irradiation of the dissolved boron in the coolant. The lithium-7 hydroxide is introduced into the RCS via the charging flow. The solution is prepared in the laboratory and transferred to the chemical additive tank. Reactor makeup water is then used to flush the solution to the suction header of the charging pumps. The concentration of lithium-7 hydroxide in the RCS is maintained in the range specified for pH control. If the concentration exceeds this range, the cation bed demineralizer is employed in the letdown line in a series operation with the mixed bed demineralizer.

During reactor startup from the cold condition, hydrazine is employed as an oxygen scavenging agent. The hydrazine solution is introduced into the RCS in the same manner as described above for the pH control agent. The reactor coolant is treated with dissolved hydrogen to control the net decomposition of water by radiolysis in the core region. The hydrogen also reacts with oxygen and nitrogen introduced into the RCS as impurities under the impetus of core radiation. Sufficient partial pressure of hydrogen is maintained in the volume control tank such that the specified equilibrium concentration of hydrogen is maintained in the reactor coolant. A self-contained pressure control valve maintains a minimum pressure in the vapor space of the volume control tank. This can be adjusted to provide the correct equilibrium hydrogen concentration.

Boron, in the chemical form of boric acid, is added to the RCS to accomplish long term reactivity control of the core. The mechanism for the process involves the absorption of neutrons by the boron-10 isotope of naturally occurring boron.

Suspended solids (corrosion product particulates) and other impurity concentrations are maintained below specified limits by controlling the chemical quality of makeup water and chemical additives and by purification of the reactor coolant through the chemical and volume control system mixed bed demineralizer.

5.2.3.2.2 Compatibility of Construction Materials with Reactor Coolant

All of the ferritic low alloy and carbon steels which are used in principal pressure retaining applications are provided with corrosion resistant cladding on all surfaces that are exposed to the reactor coolant with exception of RVCH Nozzles repaired using IDTB welding, where a portion of the RVCH low alloy steel base metal within the bore of the RVCH nozzle penetration is exposed to the reactor coolant. The corrosion resistance of the cladding material is at least equivalent to the corrosion resistance of Types 304 and 316 austenitic stainless steel alloys, or nickel chromium iron alloys, martensitic stainless steel, or precipitation-hardened stainless steel. The cladding on ferritic type base materials receives a postweld heat treatment, as required by the ASME Code.

Ferritic low alloy and carbon steel nozzles are safe ended with either stainless steel wrought materials, stainless steel weld metal analysis A-7 (designated A-8 in the 1974 Edition of the ASME Code), or nickel-chromium-iron alloy weld metal F-Number 43. The latter buttering material may be further safe ended with austenitic stainless steel base material after completion of the postweld heat treatment when the nozzle is larger than a 4-inch nominal inside diameter and/or the wall thickness is greater than 0.531 inches.

All of the austenitic stainless steel and nickel-chromium-iron alloy base materials with primary pressure retaining applications are used in the solution annealed heat treat condition. These heat treatments are as required by the material specifications.

During subsequent fabrication, these materials are not heated above 800F other than locally by welding operations. The solution annealed surge line material is subsequently formed by hot bending followed by a re-solution annealing heat treatment. Alloy 52M is used for pressurizer nozzles weld overlay and creates an RCS pressure boundary at the surge line, spray line, safety valve and relief valve nozzles.

Components of stainless steel exhibiting sensitization in the manner expected during component fabrication and installation will operate satisfactorily under normal plant chemistry conditions in pressurized water reactor systems because chlorides, fluorides, and oxygen are controlled to very low levels.

5.2.3.2.3 Compatibility with External Insulation and Environmental Atmosphere

In general, all of the materials listed in Table 5.2.3-1 which are used in principal pressure retaining applications and which are subject to elevated temperature during system operation are in contact with thermal insulation that covers their outer surfaces.

The thermal insulation used on the RCPB is either reflective stainless steel type or made of compounded materials which yield low leachable chloride and/or fluoride concentrations. The compounded materials in the form of blocks, boards, cloths, tapes, adhesives, or cements, are silicated to provide protection of austenitic stainless steels against stress corrosion which may result from accidental wetting of the insulation by spillage, minor leakage, or other contamination from the environmental atmosphere. New RCPB fiberglass insulation added as a result of the steam generator replacement is procured in accordance with Regulatory Guide 1.36 requirements. Section 1.8 includes a discussion addressing compliance with Regulatory Guide 1.36 "Nonmetallic Thermal Insulation for Austenitic Stainless Steel."

In the event of coolant leakage, the ferritic materials will show increased general corrosion rates. Where minor leakage is anticipated from service experience, such as valve packing or pump seals, only materials which are compatible with the coolant are used. These are as shown on Table 5.2.3-1. Ferritic materials exposed to coolant leakage can be readily observed as part of the inservice visual and/or nondestructive inspection program to assure the integrity of the component for subsequent service.

5.2.3.3 Fabrication and Processing of Ferritic Materials

5.2.3.3.1 Fracture Toughness

The fracture toughness properties of the RCPB components meet the testing and acceptance requirements of the ASME Code, Section III, Paragraphs NB, NC, and ND-2300, as appropriate.

The fracture toughness properties of the reactor vessel materials are discussed in Section 5.3.

Limiting pressurizer RT_{NDT} temperatures are guaranteed at 60 F for the base materials and the weldments. These materials meet the 50 ft.-lb. absorbed energy and 35 mils lateral expansion requirements of the ASME Code, Section III at 120 F. An RT_{NDT} of +10°F maximum was required for all ferritic pressure retaining material (except bolting materials). An RT_{NDT} of +10°F maximum was required for all ferritic pressure weld material. Drop weight and Charpy V-notch tests were performed per the requirements of ASME Section III, Subsection NB to verify that ferritic pressure boundary materials, including weld filler materials, exhibit adequate fracture toughness. Drop weight test were performed at temperatures not to exceed +10°F. Charpy V-notch tests were performed at temperatures not to exceed +70°F. Pressure boundary bolting material with nominal diameters exceeding one inch were required to meet the minimum requirements of 25 mils lateral expansion and 45 ft. lbs., in terms of Charpy V-notch tests conducted at the lesser of +50°F, the lowest service temperature, or the preload temperature. The actual results of these tests are provided in the ASME material data reports which are supplied for each component. The fracture toughness properties of steam generator and pressurizer materials are available in the SHNPP QA records.

Calibration of temperature instruments and charpy impact test machines are performed to meet the requirements of the ASME Code, Section III, Paragraph NB-2360.

Westinghouse has conducted a test program to determine the fracture toughness of low alloy ferritic materials with specified minimum yield strengths greater than 50,000 psi to demonstrate compliance with Appendix G of the ASME Code, Section III. In this program, fracture toughness properties were determined and shown to be adequate for base metal plates and forgings, weld

metal, and heat affected zone metal for higher strength ferritic materials used for components of the RCPB. The results of the program are documented in Reference 5.2.3-1.

5.2.3.3.2 Control of Welding

All welding is conducted utilizing procedures qualified according to the rules of Sections III and IX of the ASME Code and as modified by applicable code cases or relief requests. Control of welding variables, as well as examination and testing during procedure qualification and production welding, is performed in accordance with ASME Code requirements.

Section 1.8 includes discussions which indicate the degree of conformance with Regulatory Guides 1.43, "Control of Stainless Steel Weld Cladding of Low-Alloy Steel Components," and 1.50, "Control of Preheat Temperature for Welding of Low Alloy Steel." Additional discussion of practices employed in fabrication of the reactor vessel is included in Section 5.3.1.2.

Westinghouse practices conform to AWS D1.1, Section 4.5, "Structural Welding Code," which addresses moisture control for low-hydrogen covered-arc-welding electrodes. The recommendation in AWS D1.1, Section 4.5.2.1, "Approved Atmospheric Exposure Time Periods," for the permissible atmospheric exposure of low-hydrogen electrodes is followed.

Electroslag welding is used in the fabrication of the reactor coolant pumps; compliance with Regulatory Guide 1.34, "Control of Electroslag Weld Properties," is addressed in the following discussion. For the reactor coolant pump casing weld, the recommendations of Regulatory Guide 1.34 are met; it should be noted that this weld is a circumferential weld, therefore, the recommendations in Regulatory Position C.3 are not applicable.

Section 1.8 includes a discussion which indicates the degree of conformance with Regulatory Guide 1.71, "Welder Qualification for Areas of Limited Accessibility."

5.2.3.4 Fabrication and Processing of Austenitic Stainless Steel

Sections 5.2.3.4.1 through 5.2.3.4.5 address Regulatory Guide 1.44, "Control of the Use of Sensitized Stainless Steel", and present methods and controls utilized by Westinghouse to avoid sensitization and prevent intergranular attack of austenitic stainless steel components. The RCPB uses austenitic stainless steel or carbon steel with stainless cladding. No cold-worked austenitic stainless steel is used. Therefore, an upper limit on yield strength is not applicable. Also, Section 1.8 includes a discussion which indicates the degree of conformance with Regulatory Guide 1.44.

5.2.3.4.1 Cleaning and Contamination Protection Procedures

It is required that all austenitic stainless steel materials used in the fabrication, shop installation and testing of nuclear steam supply components and systems be handled, protected, stored and cleaned according to recognized and accepted methods which are designed to minimize contamination which could lead to stress corrosion cracking. The rules covering these controls are stipulated in Westinghouse process specifications. As applicable, these process specifications supplement the equipment specifications and purchase order requirements of every individual austenitic stainless steel component or system which Westinghouse procures for the Nuclear Steam Supply System, regardless of the ASME Code classification.

The process specifications which define these requirements and which follow the guidance of the American National Standards Institute N-45 Committee specifications are as follows:

Process Specification Number	
82560HM	Requirements for Process Sensitive Tapes for use on Austenitic Stainless Steels.
83336KA	Requirements for Thermal Insulation Used on Austenitic Stainless Steel Piping and Equipment.
83860LA	Requirements for Marking of Reactor Plant Components and Piping.
84350HA	Site Receiving, Inspection, and Storage Requirements for Systems, Material, and Equipment.
84351NL	Determination of Surface Chloride and Fluoride on Austenitic Stainless Steel Materials.
85310QA	Packaging and Preparing Nuclear Components for Shipment and Storage.
292722	Cleaning and Packaging Requirements of Equipment for Use in the NSSS.
597756	Pressurized Water Reactor Auxiliary Tanks Cleaning Procedures.
597760	Cleanliness Requirements During Storage, Construction, Erection, and Start Up Activities of Nuclear Power System.

Piping supplied by Ebasco meets the cleanliness requirements of ANSI N45.2.1.

Erection and installation in the field is performed by using field procedures approved by Westinghouse, if required.

Section 1.8 includes a discussion which indicates the degree of conformance of the austenitic stainless steel components of the RCPB with Regulatory Guide 1.37, "Quality Assurance Requirements for Cleaning Fluid Systems and Associated Components of Water Cooled Nuclear Power Plants."

5.2.3.4.2 Solution Heat Treatment Requirements

The austenitic stainless steels listed in Tables 5.2.3-1 and 5.2.3-2 are utilized in the final heat treated condition required by the respective ASME Code, Section II, materials specification for the particular type or grade of alloy.

5.2.3.4.3 Material Inspection Program

The Westinghouse practice is that austenitic stainless steel materials of product forms with simple shapes need not be corrosion tested provided that the solution heat treatment is followed by water quenching. Simple shapes are defined as all plates, sheets, bars, pipe, and tubes, as

well as forgings, fittings, and other shaped products which do not have inaccessible cavities or chambers that would preclude rapid cooling when water quenched. When testing is required, the tests are performed in accordance with ASTM A 393 or ASTM A 262, Practice A or E, as amended by Westinghouse Process Specification 84201MW.

5.2.3.4.4 Prevention of Intergranular Attack of Unstabilized Austenitic Stainless Steels

Unstabilized austenitic stainless steels are subject to intergranular attack (IGA) provided that three conditions are present simultaneously. These are:

a) An aggressive environment, e.g., an acidic aqueous medium containing chlorides or oxygen.

b) A sensitized steel.

c) A high temperature.

If any one of the three conditions described above is not present, intergranular attack will not occur. Since high temperatures cannot be avoided in all components in the Nuclear Steam Supply system, Westinghouse relies on the elimination of conditions a and b above to prevent intergranular attack on wrought stainless steel components.

The water chemistry in the RCS of the SHNPP is rigorously controlled to prevent the intrusion of aggressive species. In particular, the maximum permissible oxygen and chloride concentrations are 0.1 ppm (when the plant is above 180°F) and 0.15 ppm, respectively. Reference 5.2.3-2 describes the precautions taken to prevent the intrusion of chlorides into the system during fabrication, shipping, and storage. The use of hydrogen overpressure precludes the presence of oxygen during operation. The effectiveness of these controls has been demonstrated by both laboratory tests and operating experience. The long time exposure of severely sensitized stainless in early plants to pressurized water reactor coolant environments has not resulted in any sign of intergranular attack. Reference 5.2.3-2 describes the laboratory experimental findings and the Westinghouse operating experience. The additional years of operations since the issuing of Reference 5.2.3-2 have provided further confirmation of the earlier conclusions. Severely sensitized stainless steels do not undergo any intergranular attack in Westinghouse pressurized water reactor coolant environments.

In spite of the fact there never has been any evidence that pressurized water reactor coolant water attacks sensitized stainless steels, it is good metallurgical practice to avoid the use of sensitized stainless steels in the nuclear steam supply system components. Accordingly, measures are taken to prohibit the purchase of sensitized stainless steels and to prevent sensitization during component fabrication. Wrought austenitic stainless steel stock used for Westinghouse supplied components that are part of: 1) the RCPB, 2) systems required for reactor shutdown, 3) systems required for emergency core cooling, and 4) reactor vessel internals (relied upon to permit adequate core cooling for normal operation or under postulated accident conditions) is utilized in one of the following conditions:

a) Solution annealed and water quenched, or

b) Solution annealed and cooled through the sensitization temperature range within less than approximately 5 minutes.

It is generally accepted that these practices prevent sensitization. Westinghouse has verified this by performing corrosion tests on as-received wrought material.

Stainless steel piping was procured in the solution annealed unsensitized condition.

Heat affected zones of welded components must, of necessity, be heated into the sensitization temperature range, 800 F to 1500 F. However, severe sensitization, i.e., continuous grain boundary precipitates of chromium carbide with adjacent chromium depletion, can still be avoided by control of welding parameters and welding processes. The heat input and associated cooling rate through the carbide precipitation range are of primary importance. Westinghouse has demonstrated this by corrosion testing a number of weldments.

Heat input is calculated according to the formula:

$$H = \frac{(E)(I)(60)}{S}$$

Where:

H = joules/in.

E = volts

I = amperes

S = travel speed, in./min

Of 25 production and qualification weldments tested, representing all major welding processes and a variety of components, and incorporating base metal thicknesses from 0.10 to 4.0 in., only portions of two were severely sensitized. Of these, one involved a heat input of 120,000 joules, and the other involved a heavy socket weld in relatively thin walled material. In both cases, sensitization was caused primarily by high heat input relative to the section thickness. However, only in the socket weld did the sensitized condition exist at the surface where the material is exposed to the environment. The controls discussed in Section 5.2.3.4.4 are utilized to prevent intergranular attack.

The heat input is controlled in all shop austenitic pressure boundary weldments by:

a) Prohibiting the use of block welding.

b) Limiting the maximum interpass temperature to 350 F.

c) Exercising review rights on all welding procedures.

To further assure that these controls are effective in preventing sensitization, Westinghouse will, if necessary, conduct additional intergranular corrosion tests of qualification mock ups of primary pressure boundary and core internal component welds, including the following:

a) Reactor vessel safe ends

b) Pressurizer safe ends

c) Surge line

d) Control rod drive mechanisms head adaptors

e) Control rod drive mechanisms seal welds

f) Control rod extensions

g) Lower instrumentation penetration tubes

To summarize, Westinghouse has a four point program designed to prevent intergranular attack of austenitic stainless steel components.

a) Control of primary water chemistry to ensure a benign environment.

b) Utilization of materials in the final heat treated condition and the prohibition of subsequent heat treatments in the 800F and 1500F temperature range.

c) Control of welding processes and procedures to avoid severe sensitization in heat affected zones.

d) Confirmation that the welding procedures used for the manufacture of components in the primary pressure boundary and of reactor internals do not result in the severe sensitization of heat affected zones.

Both operating experience and laboratory experiments with primary system conditions have conclusively demonstrated that this program is 100 percent effective in preventing intergranular attack in Westinghouse Nuclear Steam Supply Systems utilizing unstabilized austenitic stainless steel.

5.2.3.4.5 Retesting Unstabilized Austenitic Stainless Steels Exposed to Sensitization Temperatures

Unstabilized austenitic stainless steels are not exposed to the sensitization range of 800F to 1500F during fabrication other than instantaneously and locally by welding operations, as discussed in Section 5.2.3.4.4.

5.2.3.4.6 Control of Welding

The following paragraphs address Regulatory Guide 1.31, "Control of Ferrite Content in Stainless Steel Weld Metal", and present the methods used by Westinghouse, as well as the verification of these methods, for austenitic stainless steel welding. Ebasco practices and compliance with Regulatory Guide 1.31 are discussed in Section 1.8.

The welding of austenitic stainless steel is controlled to mitigate the occurrence of microfissuring or hot cracking in the weld. Although published data and experience have not confirmed that fissuring is detrimental to the quality of the weld, it is recognized that such fissuring is undesirable in a general sense. Also, it has been well documented in the technical literature

that the presence of delta ferrite is one of the mechanisms for reducing the susceptibility of stainless steel welds to hot cracking. However, there is insufficient data to specify a minimum delta ferrite level below which the material will be prone to hot cracking. It is assumed that such a minimum lies somewhere between 0 and 3 percent delta ferrite.

The criteria discussed in the following paragraphs concerning delta ferrite determinations were incorporated on Shearon Harris Nuclear Power Plant components fabricated in accordance with the ASME Code, Summer 1973 Addenda and later, as well as on SHNPP components involved in the Westinghouse delta ferrite verification program.

The scope of these controls discussed herein encompasses welding processes used to joint stainless steel parts in components designed and fabricated in accordance with the ASME Code, Section III, Class 1, 2, and core support components. Delta ferrite control is appropriate for the above welding requirements except where no filler metal is used or where for other reasons such control is not applicable. These exceptions include electron beam welding, autogenous gas shielded tungsten arc welding, explosive welding, and cladding.

The fabrication and installation specifications require welding procedures and welder qualification in accordance with Section III, and include the delta ferrite determinations for the austenitic stainless steel welding materials that are used for welding qualification testing and for production processing. Specifically, the undiluted weld deposits of the "starting" welding materials are required to contain a minimum of 5 percent delta ferrite as determined by chemical analysis and calculation using the appropriate weld metal constitution diagrams in Section III (Summer 1973 Addenda and later). The equivalent ferrite number may be substituted for percent delta ferrite. When new welding procedure qualification tests are evaluated for these applications, including repair welding of raw materials, they are performed in accordance with the requirements of Section III and Section IX.

The "starting" welding materials used for fabrication and installation welds of austenitic stainless steel materials and components meet the requirements of Section III. The austenitic stainless steel welding material conforms to ASME weld metal analysis A-7 (designated A-8 in the 1974 Edition of the ASME Code). Bare weld filler metal, including consumable inserts used in inert gas welding processes, conforms to ASME SFA 5.9, and is procured to contain not less than 5 percent delta ferrite according to Section III (Summer 1973 Addenda and later). Weld filler metal materials used in flux shielded welding processes conform to ASME SFA 5.4 or 5.9 and are procured in a wire-flux combination to be capable of providing not less than 5 percent delta ferrite in the deposit according to Section III (Summer 1973 Addenda and later).

Combinations of approved heat and lots of "starting" welding materials are used for all welding processes. The welding quality assurance program includes identification and control of welding material by lots and heats as appropriate. All of the weld processing is monitored according to approved inspection programs which include review of "starting" materials, qualification records and welding parameters. Welding systems are also subjected to quality assurance audits, including calibration of gages and instruments: identification of "starting" and completed materials; welder and procedure qualifications; availability and use of approved welding and heat treating procedures; and documentary evidence of compliance with materials, welding parameters and inspection requirements. Fabrication and installation welds are inspected using nondestructive examination methods according to Section III rules.

To assure the reliability of these controls, Westinghouse has completed a delta ferrite verification program, described in Reference 5.2.3-3, which has been approved as a valid approach to verify the Westinghouse hypothesis and is considered an acceptable alternative for conformance with the NRC Interim Position on Regulatory Guide 1.31. The Regulatory Staff's acceptance letter and topical report evaluation were received on December 30, 1974. The program results, which support the hypothesis presented in Reference 5.2.3-3, are summarized in Reference 5.2.3-4.

Section 1.8 includes discussions which indicate the degree of conformance of the austenitic stainless steel components of the RCPB with Regulatory Guides 1.34, "Control of Eletroslag Properties," and 1.71, "Welder Qualification for Areas of Limited Accessibility."

5.2.4 INSERVICE INSPECTION AND TESTING OF REACTOR COOLANT PRESSURE BOUNDARY

This section discusses the inservice inspection (ISI) and testing program for ASME Class 1 components as defined in Section 3.2 (i.e., ASME Boiler and Pressure Vessel Code Section III, Class 1). Preservice inspection (PSI) and testing will be conducted in accordance with ASME Code Section XI, 1980 edition through Winter '81 addenda, except where specific relief is requested. Inservice inspection and testing will be conducted in accordance with the ASME Code Section XI edition required by 10 CFR 50.55a(g) and (f) respectively as detailed in the Technical Specifications, except where specific relief is requested. Preservice and inservice inspection of steam generator tubes will be performed in accordance with Regulatory Guide 1.83, Revision 1 (See Section 1.8). The Examination Plan has been submitted to the NRC.

5.2.4.1 System Boundary Subject to Inspection

The scope of the program encompasses those ASME Class 1 pressure-containing components (and their supports) within the reactor coolant pressure boundary (RCPB) as defined in 10 CFR 50.2(v) and 10 CFR 50.55a footnote 2. The system boundary includes all Class 1 pressure-retaining components such as pressure vessels, piping, pumps, valves, and heat exchangers that are part of or are connected to the RCS up to and including the following:

a) The outermost containment isolation valve in system piping that penetrates the Containment.

b) The second of two valves normally closed during normal reactor operation in system piping that does not penetrate Containment.

c) The RCS safety and relief valves.

5.2.4.2 Accessibility

Access is provided for the inspector and for examination personnel and equipment in accordance with Subarticle IWA-1500 of Section XI of the ASME BP&V Code. Provisions for the removal and storage of structural members, shielding, insulation materials, etc., that would restrict access for examination are included in the plant design and operating procedures. More specifically, access is provided for visual, surface, and volumetric examinations of welds and their adjacent base metal by means of removable insulation, and use of remote inspection devices in areas where removable access is restricted by space, temperature, and/or high-

radiation environments. Also, working platforms are provided at strategic locations in the plant to permit access to those areas of the RCPB that are designated as inspection points in the ISI program.

5.2.4.2.1 Reactor vessel

The vessel is designed to permit full compliance with B&PV Code Section XI, assuming that all volumetric examinations of pressure-containing welds will be performed primarily from internal surfaces of the vessel.

The following areas of the reactor vessel will be available for nondestructive inservice examinations:

a) Full-penetration pressure-retaining welds in the following areas: vessel shell inside surface; reactor vessel nozzle inside surfaces; closure head outside surfaces; bottom head inside and outside surfaces; nozzle safe ends and adjacent piping from inside and outside surfaces.

b) Closure studs, nuts, and washers.

c) Vessel flange stud hole threads, flange ligaments between threaded stud holes, and flange sealing surface.

d) Peripheral control rod drive housing welds.

The following are special features incorporated into the vessel design and into the plant facilities to achieve quality inservice examinations in an expeditious manner.

1) The reactor vessel cladding finish is ground to a 250 rms finish (or better) for an appropriate distance on either side of all weld centerlines to enable ultrasonic examinations of the weld metal and base metal for one-half plate thickness beyond the edge of the weld.

2) The closure head will be stored dry with the flange seal surface at least 18 in. above the floor to provide access for a visual examination of the closure head cladding.

3) The reactor vessel studs, nuts, and washers will ordinarily be removed with the head. Suitable handling equipment is provided for removing the studs for cleaning and examination. (See Section 1.8)

4) Working platforms or temporary scaffolds are provided to facilitate access to examination areas.

5.2.4.2.2 Piping system

An access survey for SHNPP has been performed by Southwest Research Institute on Class 1 piping. The survey used the 1977 Edition of Section XI through the Summer 1978 Addenda as the basis. ASME Code Class 1 piping system welds subject to volumetric or surface examinations are designed to facilitate ultrasonic and liquid penetrant examinations. Weld

profiles and finishes and component configurations and arrangements utilized to assure the examinability of these systems are described below.

Code Class 1 piping larger than 1 in. nominal pipe size is counterbored up to two pipe-wall thicknesses (2T) from the weld end preparation for circumferential butt welds. This counterbore requirement applies to the fit up of straight piping butt welds only (both shop and field). Flanges, valves, reducers, tees, crosses, and elbows or other pipe fittings may have shorter counterbores.

Configurations which place pipe fittings adjacent to other fittings or adjacent to components such as pumps and valves are avoided in systems requiring ultrasonic examinations.

Branch pipe or fitting connections located near circumferential butt welds subject to ultrasonic examination are located so that a minimum axial clearance of 2T + 4 in. exists between the toe of the branch weld and the centerline of the circumferential butt weld, where T = nominal pipe wall thickness.

Straight sections of pipe or "spool pieces" are located between pipe fittings or between fittings and pumps and valves. These spool pieces have a minimum length of 2T + 4 in. or 6 in., whichever is larger.

Most bolted or welded pipe hangers and pipe whip restraints are located at least 2T + 4 in. from any welds that require ultrasonic examination; however, bolted hangers that can be removed to allow the examination may be located nearer than 2T + 4 in. from the weld.

No welds requiring ultrasonic examination are located in the primary shield wall penetration holes.

Sufficient space around Class 1 piping systems and components requiring manual examinations (visual, surface, and/or volumetric) will be provided for the examiner. Access provisions for the examinations of various types of welds are described below.

a) Removable insulation is provided for circumferential weld joints in seamless pipe for a minimum distance of 6 in. or 2T + 4 in., whichever is greater, on each side of the weld. However, where the circumferential weld joins a pipe to a fitting, valve, pump, or any other type component, this access is provided only on the pipe side of the weld.

b) Where seam-welded pipe or fittings are used, access is provided to the longitudinal seam welds for a distance of 15 in. from the adjacent circumferential weld (12 in. for code requirement plus 3 in. for work access).

c) Working platforms will be provided to facilitate the examination.

5.2.4.2.3 Pressurizer

The external surface is accessible for visual, surface, or volumetric examination by removing the external insulation. A manway is provided to allow access for internal visual examination. The permanent insulation around the pressurizer heaters will be provided with a means to identify component leakages during system hydrostatic and leakage testing.

5.2.4.2.4 Steam generators

The external surface is accessible for visual, surface, or volumetric examination by removing portions of the vessel insulation. Manways in the SG channel head provide access for internal visual examinations and eddy current testing of SG tubing.

5.2.4.2.5 Pump pressure boundaries

The internal pressure-retaining surfaces of the pumps are accessible for visual examination by removing the pump internals. External surfaces of the pump casing are accessible for visual surface examination by removing component insulation. Visual examination of interior surfaces and volumetric examination of pump casings can be performed when the pumps are disassembled for maintenance purposes.

5.2.4.2.6 Valve pressure boundaries

The internal pressure boundary surfaces of Class 1 valves over 1 in. nominal size are accessible for visual examination by disassembly. External surfaces of the valve bodies are accessible for visual, surface, or volumetric examinations by removing component insulation. Visual examinations of the internal valve surfaces can be performed when the valves are disassembled for maintenance purposes.

5.2.4.2.7 Insulation

The insulation covering all component and piping welds and adjacent base metal is reflective metal or fiberglass blanket insulation jacketed with stainless steel or fiberglass blanket insulation with stainless steel wire mesh jacket on the RSG primary side channel heads. The insulation is designed for removal and replacement in areas where external inspection is planned. Sections of the insulation over welds are identified with a number which is keyed to the weld number underneath.

5.2.4.2.8 Remote inspection in radiation fields

Where possible, inspections in areas where radiation levels restrict the access of personnel for direct examination, remote examination equipment will be used.

A continuing program of radiation surveys during the refueling programs will be performed to ensure that any possible future problem areas are detected at an early stage. Should additional experience in the maintenance and inspection of operating plants indicate that other areas exist where access is either limited or impossible, requests for relief from Section XI requirements will be made.

5.2.4.3 Examination Techniques and Procedures

The examination techniques and procedures are conducted in accordance with the following criteria:

a) Visual examination techniques are in accordance with IWA-2210.

b) Surface examination techniques are in accordance with IWA-2220.

c) Volumetric examination methods are in accordance with IWA-2230.

d) Alternate examination methods to those given above in a, b, and c may be used provided the results are equivalent or superior, as stated in IWA-2240. The acceptance standards of these alternative methods are in accordance with IWB-3000.

5.2.4.4 Inspection Intervals

The required examinations and tests will be performed in accordance with IWA-2400 and IWB-2400. The inspection schedule will be based upon "Inspection Program B" in Table IWB-2412-1.

5.2.4.5 Examination Categories

The inservice inspection categories for ASME Class 1 components are in accordance with Table IWB-2500-1 and as noted above.

The examination categories and inspection requirements are described in the Examination Plan.

5.2.4.6 Evaluation of Examination Results

Evaluation of examination results for Class 1 components will be conducted in accordance with Article IWA-3000 and IWB-3000.

The flaw evaluation program is in accordance with Table IWB-3410. The program for repairs of unacceptable indications or replacement of components will be in accordance with the requirements of Article IWA-4000 and IWB-4000. Criteria for establishing need for repair or replacement is per IWB-3000.

5.2.4.7 System Leakage and Hydrostatic Tests

System leakage and hydrostatic tests of ASME Class 1 components are conducted per the requirements of ASME Section XI Articles IWA-5000 and IWB-5000.

Examinations performed during these tests will be conducted without the removal of insulation. Technical specification requirements on operating limits during heatup, cooldown, and system hydrostatic pressure testing shall be employed for these tests.

5.2.4.8 Code Exemptions

Exemptions from Code examinations are taken in accordance with the criteria of IWB-1220. Code exemptions are listed in the Examination Plan.

5.2.4.9 Relief Requests

Relief requests from Code examinations which are found to be impractical due the limitations of design, geometry, or materials of construction are listed in the Examination Plan.

5.2.5 DETECTION OF LEAKAGE THROUGH REACTOR COOLANT PRESSURE BOUNDARY

The leakage-detection systems are intended to sense radioactive and non-radioactive leakage from the reactor coolant into auxiliary systems and the Containment, and to provide the means to locate such leakage.

The safety significance of leaks from the reactor coolant pressure boundary (RCPB) can vary widely depending on the source of the leak as well as the leakage rate and duration. Therefore, the detection and monitoring of reactor coolant leakage is required.

The leakage-detection systems provide information which permits the plant operators to take immediate corrective action should a leak be evaluated as detrimental to the safety of the facility.

5.2.5.1 Design Bases

Leakage-detection system design objectives are in accordance with the requirements of 10 CFR Part 50, GDC 30, and Regulatory Guide 1.45. Additional description of the leakage-detection design objectives are contained in the Technical Specifications.

The reactor coolant boundary leakage detection systems are designed to detect leaks and determine the leakage rate. The leakage detection equipment is designed to continuously monitor the environmental conditions within the Containment so that a significant increase in normal containment environmental conditions indicative of an increase in leakage from primary systems and components can be identified, and the leakage rate established.

The Airborne Particulate and Gaseous Radioactivity Monitoring Systems are designed to remain functional when subjected to the SSE. In addition, the containment temperature and pressure monitors, which serve as backup, gross leakage indicators, are also part of the Post Accident Monitoring System and are qualified for the SSE.

The identified leakage detection systems are considered to perform only monitoring and alarm indication functions and are not seismically qualified.

5.2.5.1.1 Leakage Classification

RCPB leakage is classified as identified or unidentified and methods for physically separating the leakage into these classifications are provided to supply prompt and quantitative information about the leakage to the plant operators. Pressure boundary leakage, whether identified or unidentified, is leakage through a nonisolatable fault in a reactor coolant system component body, pipe wall, or vessel wall. Definitions of leakages are as follows:

Identified Leakage - Identified leakage is comprised of:

a) Leakage, such as pump seal or valve packing leaks into closed systems, that is captured and conducted to a collecting tank. This component of identified leakage, originating from sources which cannot practically be eliminated, is piped to the pressurizer relief tank or the reactor coolant drain tank. Since the leakage system is closed, it is essentially isolated from

the containment atmosphere and cannot mask a potentially serious leak to the atmosphere, should it occur.

b) Leakage into the containment atmosphere from sources that are both specifically located and known not to interfere with the operation of the leakage detection systems or not to be pressure boundary leakage.

c) Intersystem leakage from the RCPB to other systems across passive barriers or valves. Substantial intersystem leakage from the RCPB to the secondary system or to auxiliary systems is not expected.

d) Controlled leakage which is the seal water flow supplied to the reactor coolant pump seals.

Unidentified Leakage - Unidentified leakage is all leakage which is not identified leakage or controlled leakage. It is impractical to completely eliminate unidentified leakage, but efforts are made to reduce this leakage to a small background flow rate permitting the leakage detection systems to detect positively and rapidly any small increase in unidentified leakage flow rate.

5.2.5.1.2 Limits for reactor coolant leakage

RCS leakage is limited to the following:

a) 10-gpm identified leakage from the RCS, or 1 gpm total primary to secondary identified leakage through all steam generators not isolated from the RCS and 150 gpd through any one steam generator not isolated from the RCS.

b) 1-gpm unidentified leakage

c) No pressure boundary leakage

d) 31-gpm controlled leakage at an RCS pressure of 2235 ± 20 psig.

5.2.5.2 System Description

The means provided for leak detection consists of instrumentation which can detect general leakage from the reactor coolant pressure boundary. Through changes in liquid level or radioactivity level, specific sources of leakage can frequently be identified. The various methods of detecting leakage (unidentified and identified) are discussed in the following paragraphs.

5.2.5.2.1 Identified leakage detection

Within the Containment Building, identified leakage into closed systems is directed to the reactor coolant drain tank or pressurizer relief tank.

Pump seal or valve packing leakage is directed to the reactor coolant drain tank where it is monitored by tank pressure, temperature, level instrumentation, and flow instrumentation on the reactor coolant drain tank discharge lines. Leakage past the pressurizer safety valves or power operated relief valves is directed to the pressurizer relief tank. This leakage is monitored by temperature instrumentation in the piping system and tank pressure, temperature and level

instrumentation. Leakage collected in the pressurizer relief tank is directed to the reactor coolant drain tank for subsequent discharge.

Determination is made by performing an inventory balance on the PRT and RCDT over a finite period of time. The inventory balance is performed by measuring the increase in level in the PRT and RCDT. Normally, the time interval over which the level increase is measured is one hour.

Intersystem leakage to any significant degree into the secondary system or auxiliary systems connected to the RCPB is not expected to occur. The principal intersystem leakage path for primary coolant into other systems is through the steam generator tubes into the secondary side of the steam generator. Identified leakage to the steam generator is detected by means of the steam generator blowdown or vacuum pump radiation monitors. This leakage is quantified via sampling and analysis. For details of these radiation monitors see Section 11.5.2.

Auxiliary systems connected to the RCPB incorporate design provisions which serve to limit leakage. These provisions include isolation valves designed for low seat leakage, periodic testing of RCPB check valves (see Section 6.3.4.2), and inservice inspection (see Section 6.6).

Leakage will be detected by increasing auxiliary system level, temperature, and pressure indications or by lifting of relief valves accompanied by increasing values of monitored parameters in the relief valve discharge path. These systems are isolated from the RCS by normally closed valves and/or check valves.

a) Residual Heat Removal System (suction side) - The RHRS is isolated from the RCS on the RHRS pump suction side by motor-operated valves. Leakage past these valves will be detected by lifting of relief valves accompanied by increasing pressurizer relief tank level, pressure, and temperature indications and alarms on the main control board.

b) Safety Injection System/Accumulators - The accumulators are isolated from the RCS by check valves. Leakage past these valves and into the accumulator subsystem will be detected by redundant control room accumulator pressure and level indications and alarms.

c) Safety Injection System/RHR Discharge Subsystem - The RHR pump portion of the Safety Injection System is isolated from the RCS by three check valves in series. Leakage past these valves will eventually pressurize the RHR discharge header and result in lifting of relief valves. Relief valve lifting will be accompanied by control room indication and alarms of increasing boron recycle holdup tank levels.

d) Safety Injection System/Charging Pump Subsystem - The charging pump subsystem of the Safety Injection System is isolated from the RCS by check valves, motor-operated valves, and manual valves. Leakage past these valves toward the charging pumps is not possible since the valve inlet will be pressurized by the operating charging pump.

e) Head Gasket Monitoring Connections - Leakage past the reactor vessel head gasket(s) will result in temperature indication and alarm in the Control Room.

Reactor coolant inventory monitoring provides an indication of system leakage. Net level changes in the pressurizer and volume control tank are functions of system leakage since the Chemical and Volume Control System is a closed loop connected to the Reactor Coolant

System. Monitoring net makeup to the Chemical and Volume Control System as well as net collected leakage provides an important method of obtaining information for use in establishing a water inventory balance. An abnormal increase in makeup water requirements or a significant change in the water inventory balance can be indicative of increased system leakage.

Gross leakage in the Containment can be indicated by:

a) Decrease in pressurizer level

b) Increase in the rate of supply of reactor coolant makeup water

c) Containment temperature

d) Containment pressure

e) Containment sump level

5.2.5.2.2 Unidentified leakage detection

Primary indications of unidentified coolant leakage to the Containment are provided by air particulate and noble gas monitors, and containment sump level monitors.

In normal operation, these primary monitors show a background level which is indicative of the normal level of unidentified leakage inside the Containment. Increases in airborne reactor coolant corrosion and fission products above normal levels could signify an increase in unidentified leakage rates and that corrective action may be required. Similarly, increased specific humidity in containment will result in greater containment air cooler condensate flow. This liquid and other unidentified leakage will cause increases in containment sump level.

Normally, unidentified leakage from the Reactor Coolant System is essentially zero. The Reactor Coolant System is an all welded system, with the exception of the connections on the pressurizer safety valves, reactor vessel head, reactor vessel vent, and the pressurizer and steam generator manways, which are flanged. All other connections to the Reactor Coolant System are welded.

In general, valves in the Reactor Coolant System, which are two in. and under in size, are of the packless type. All valves larger than two in. have dual packing with a leakoff connection to the reactor coolant drain tank or containment sump (depending on valve location) between the two packings.

Leakage from the Reactor Coolant System to the Component Cooling Water System, which services all components of the reactor coolant pressure boundary that require cooling, will be detected by the Component Cooling Water Radioactivity Monitoring System.

Reactor coolant system unidentified leakage may also be indicated by increasing charging pump flow rate compared with reactor coolant system inventory changes and by unscheduled increases in reactor makeup water usage.

The above methods are supplemented by visual and ultrasonic inspections of the reactor coolant pressure boundary during plant shutdown periods, in accordance with the inservice inspection program (Section 5.2.4).

5.2.5.3 Primary Leakage Monitoring

5.2.5.3.1 Sump level and flow monitoring

All unidentified leakage inside the Containment is collected in the containment sump, where it can be measured and monitored.

Unidentified leakage is evidenced either as flow in equipment and floor drains or an increase in humidity in the Containment which is condensed by the containment fan coolers. Equipment and floor drains as well as condensate from the containment fan coolers and fan coil units are routed through a single eight in. diameter pipe to the containment sump. The reactor cavity floor is typically sloped to the sump so that drainage on the floor is also collected and monitored.

Two level transmitters are installed in the containment sump which provides indication to the main control room operator via the plant computer to indicate water level in the main control room. The main control board has two seismically qualified monitor lights to indicate sump hi-hi level. Also, in the radwaste control room an alarm will sound on sump hi-hi level. The plant computer periodically calculates flow into the containment sump based on a change in sump level. It will actuate an alarm in the Control Room when the calculated leak rate exceeds 1 gpm above the normal leakage.

In case of plant computer unavailability, a backup method for calculating leakage is provided in plant procedures. This alternate method requires local monitoring of sump level and subsequent manual calculation of inleakage flowrate.

After collection in the containment sump, the collected leakage is pumped to the floor drain collection tank. The combined sump pump discharge flow is available in the Control Room. The sumps are also provided with level switches to alert the operator of high level conditions in the event of sump pump malfunction.

The sump discharge line may be sampled from outside of the Containment to provide additional aid in identifying the leakage source.

The system is designed to permit calibration and operability tests during plant refueling.

5.2.5.3.2 Containment airborne particulate and gaseous radioactivity monitoring

The containment atmosphere radiation monitor is part of the safety related portion of the Radiation Monitoring System and is designed to provide a continuous indication in the Control Room of the particulate and gaseous radioactivity levels inside the Containment. Radioactivity in the containment atmosphere indicates the presence of fission products due to a reactor coolant system leak.

The monitor draws a continuous sample of containment air through a sample point located inside the Containment. The guidelines of ANS-13.1 have been followed to minimize biasing

the particulate portion of the air sample. The sample lines outside of containment are insulated and heat traced, when necessary, to prevent condensation within the lines.

The monitor uses the airborne particulate and noble gas detector described in Section 11.5.2.6.5. The containment monitor is seismic Category I and powered by the A bus. The monitor normally monitors the containment atmosphere for RCPB leakage as required by Regulatory Guide 1.45. A containment isolation signal will isolate the monitor from the Containment. The monitor provides a high radiation alarm when concentrations reach preset limits. The receipt of this alarm will also alert the operator to the presence of low level leakage so that appropriate action can be taken in order to locate the leakage source and initiate normal purge isolation when preset limits are exceeded.

Alarms and data display are located in the Control Room. In addition, data is stored in the non-safety computer system described in Section 11.5.2.3. The monitor provided is designed to function after a safe shutdown earthquake (SSE) and is powered by a safety AC Division A power bus.

The containment airborne particulate radioactivity monitor is described in Section 11.5. High radiation level and alert status alarms are provided in the Control Room. Less than one hour is required to detect a postulated step increase in coolant leakage from 0.1 gpm to 1 gpm at 85 percent thermal rating, 0.1 percent failed fuel, at the end of a 90-day purge cycle before airborne cleanup units are operational.

5.2.5.3.3 Pressurizer safety and power-operated relief valves

Leakage through the pressurizer safety and power-operated relief valves can be detected by increasing temperature at the valve inlet and outlet, respectively, and increasing pressure, level, and/or temperature in the pressurizer relief tank (PRT).

a) Inlet Line Temperature - Each of the pressurizer safety valve inlet lines contains a temperature detector with indication and alarm provided in the Control Room. Leakage through a safety valve will allow steam to displace the cool loop seal volume and cause a definitive temperature rise.

b) Discharge Line Temperature - Each of the power operated relief valves discharge to a common header which contains a temperature detector with indication and alarm provided in the Control Room. Leakage through a PORV will result in rapidly increasing temperature indication since the discharge piping has a relatively small volume.

c) PRT conditions - Since the safety and power-operated relief valves discharge to this closed tank. Steam and hydrogen (from the reactor coolant) leaking through the valves will cause pressure to rise. Steam leaking through the valves eventually condenses in the PRT and causes increasing water level and temperature. PRT pressure, level, and temperature indications and alarms are provided in the Control Room.

5.2.5.3.4 Accumulator line check valves

Leakage of reactor coolant through the accumulator check valves can be detected by:

a) Accumulator Water Level - Leakage of reactor coolant to the accumulators produces a rising water level in the tank. The level of water in each accumulator is monitored by two level transmitters. The level monitoring instrumentation for each accumulator, provided in the Control Room, consists of two level indicators and an alarm to annunciate high water levels.

b) Accumulator Pressure - Since the accumulators' nitrogen cover gas spaces are a relatively small closed volume, the rising water level due to reactor coolant inflow is accompanied by an increasing tank pressure. The pressure in each accumulator is monitored by two pressure transmitters. The pressure monitoring instrumentation for each accumulator provided in the Control Room consists of two pressure indicators and an alarm to annunciate high tank pressure.

5.2.5.3.5 Heat Exchanger Leakage

Leakage of reactor coolant through the letdown heat exchanger, reactor coolant pump thermal barrier, or sample heat exchangers can be detected by any combination of the following:

a) Component cooling water system radiation - Heat exchanger leaks will produce leakage of reactor coolant and fission products into the Component Cooling Water System. Such leakage increases the normally low radiation levels in the system and can be detected by the two component cooling water monitors described in Section 11.5. These monitors alarm and indicate both locally and in the Control Room.

Complete dispersion of only one gallon of primary coolant throughout the volume of approximately 64,000 gallons of the Component Cooling Water System is sufficient to cause early detectable rapid change in detector scale provided there is no residual radioactivity already present in CCWS fluid. In this case the limit on detection is the transport time around the component cooling water system loop. The longest time a volume of coolant leakage would have to travel before reaching the detector is 3.5 minutes. The true detection time, however, is based both on component cooling water radiation being directly proportional to the product of percent failed fuel and leak rate, and the amount of residual radiation already in the system. For a change in leak rate in the range of 0.1 gpm to 1.0 gpm with 0.1 percent failed fuel, the elapsed time for recognition of a 10 percent change in the leak rate is approximately three hours.

b) Component cooling water surge tank level - Leakage of reactor coolant increases the inventory in the Component Cooling Water System, causing an increase in the surge tank level. A level transmitter provides a high level alarm in the Control Room. Local indication is provided by level indicators.

5.2.5.3.6 Steam Generator Tube Leakage

Leakage of reactor coolant through the steam generator tubing is indicated by increasing secondary side radioactivity due to the buildup of fission products contained in the reactor coolant.

The following are methods of detecting the resulting radiation levels:

a) Blowdown line radiation - Increasing radiation levels due to dissolved and entrained fission products in the secondary side water can be detected by a radiation monitor in the steam

generator blowdown flash tank exhaust line. Remote readout and high radiation alarms are provided. The monitor is described in Section 11.5.2.7.1.3.

b) Off gas radiation - Increasing off gas radiation due to gaseous and halogen fission products in the Main Steam Supply System will be detected by the radiation monitor in the condenser off gas stream. This monitor is described in Section 11.5.2.7.2.9.

The time to detect a 1 gpm leak depends on coolant activity and previous leakage. A change from .1 gpm to 1 gpm leak will be detected in approximately two hours by the steam generator blowdown radiation monitor. A 1 gpm leak with no previous leakage can be detected immediately.

5.2.5.3.7 Containment Fan Cooler Drain Flow

Leakage of high temperature water to the Containment increases the moisture content of the air, which is removed as condensate by the containment fan coolers. The condensate collects in fan cooler drain pans and is then drained to the containment sump.

5.2.5.4 Secondary Leakage Monitoring

The following secondary monitoring methods supplement the primary monitoring methods discussed above.

5.2.5.4.1 Reactor Coolant Drain Tank Level and Flow

Identifiable reactor coolant leakage is collected in the reactor coolant drain tank. A flow transmitter in the discharge line transmits a signal to the Waste Processing System computer. The flow signal is integrated by the computer and printed out for operator information. Tank level is displayed in the Control Room to serve as a diverse means of determining leakage flow into the tank. High and low alarms are provided to alert the operator in the event that there are abnormal conditions.

No continuous leakage is expected from the reactor pressure vessel flange during operation. Any leakage, however, is detected by a temperature sensor mounted on the flange leakoff line.

5.2.5.4.2 Condenser Vacuum Pump Monitor

The condenser vacuum pump monitor is described in Section 11.5.2. The monitor is an off line radioactive gaseous type that measures radioactivity in the condenser off-gas resulting from steam generator tube leaks.

5.2.5.5 Intersystem Leakage

The condenser vacuum pump monitor and component cooling water monitor are the primary means of detecting intersystem leakage. However, the operator can detect leakage on the basis of water inventory in the auxiliary systems. Suspected intersystem leakage can be verified by laboratory radioisotopic analysis of grab samples from the suspect systems.

5.2.5.6 System Sensitivity and Response Time

5.2.5.6.1 Containment airborne particulate radioactivity monitor

The particulate monitor sensitivity and response time have been determined by analysis, with the conclusion that the monitor is capable of measuring the equivalent of a 1-gpm RCPB leakage to the Containment within one hour. Measurement interferences due to external ambient gamma background, naturally occurring airborne radioactivity, and normally undetectable RCPB leakage was considered in the analysis.

5.2.5.6.2 Containment sump level and flow monitoring

A 1-gpm liquid flow rate into the containment sumps results in level increases of 4.58 in. in one hour in the sump.

5.2.5.7 Seismic Capability of Systems

The monitors and instrumentation discussed in Section 5.2.5.1 except for the plant computer, are designed and qualified to operate following an operating basis earthquake. In addition, the containment airborne particulate radioactivity monitor is designed and qualified to operate following a safe shutdown earthquake. Seismic qualification is discussed in Section 3.10.

5.2.5.8 Indicators and Alarms

Indicators and alarms are provided in the Control Room for each of the following monitors and instrumentation, except for the manual method of monitoring containment sump level and flow monitoring.

5.2.5.8.1 Containment airborne particulate radioactivity monitor

The display for this monitor is in units of counts/minute. The alarm setpoint is calculated on the basis of monitor sensitivity, which corresponds to an RCPB leakage rate of 1 gpm, such that the alarm is initiated within one hour from the start of the leak.

5.2.5.8.2 Containment sump level and flow

The sump level is monitored by two level transmitters and is indicated in feet of sump level on the plant computer in the Control Room. The flow rate is calculated by computer from sump level changes and alarmed in the Control Room whenever the leakage rate exceeds the normal leakage rate by 1 gpm. This increase in leakage will be detected within the Regulatory Guide 1.45 requirement of less than one hour.

In case of plant computer unavailability, plant procedures direct manually monitoring sump level locally and converting the level differential to a flow rate within the Regulatory Guide 1.45 requirement of less than one hour.

An alarm will also sound on sump high-high level in the radwaste control room, provided by a level switch.

5.2.5.9 Design Evaluation

A normal level of 1 gpm or less in unidentified leakage is expected. The leakage detection systems are capable of detecting leakage as low as 0.1 gpm using the air particulate monitor and as low as 1 gpm using the radioactive gas monitor. The sensitivity is reasonably adequate to detect an increase in unidentified leakage rate. In addition, the capacity of the reactor coolant makeup system and leakage collection systems are well above the proposed leakage limits provided in the Technical Specifications.

5.2.5.10 Testing

The radiation monitors are provided with test circuitry which permits on-line testing of channel electronics. A remotely operated radiation check provides a test signal similar to the monitored radiation. The strength of the check source is sufficient to test the response of the channel including the alarms. These tests can be initiated by the operator at his discretion. The monitors and the level, flow, and humidity instrumentation are calibrated during plant shutdown and maintenance periods. Testing and calibration comply with Paragraph 4.10 of IEEE 279-1971. Preoperational testing is described in Section 14.2.12.

5.2.5.11 Technical Specifications

The limits for reactor coolant leakage and availability of detection methods are given in the Technical Specifications.

REFERENCES: SECTION 5.2

5.2.1-1 "Dynamic Fracture Toughness of ASME SA-508 Class 2a and ASME SA 533 Grade A Class 2 Base and Heat Affected Zone Material and Applicable Weld Metals," WCAP - 9292, March, 1978.

5.2.2-1 Cooper, L., Miselis, V. and Starek, R. M., "Overpressure Protection for Westinghouse Pressurized Water Reactors," WCAP 7769, Revision 1, June, 1972 (also letter NS-CE-622, dated April 16, 1975, C. Eicheldinger (Westinghouse) to D. B. Vassallo (NRC), additional information on WCAP-7769, Revision 1).

5.2.2-2 Burnett, T. W. T., et al., "LOFTRAN Code Description," WCAP 7907, June 1972.

5.2.2-3 "Valve Inlet Fluid Conditions for Pressurizer Safety and Relief Valves in Westinghouse-Designed Plants," EPRI Report NP-2296-LD, March 1982.

5.2.2-3a EMF-2377 Rev. 0, "HNP Chapter 15 Engineering Report for Harris Nuclear Plant Steam Generator Replacement Uprating."

5.2.2-3b HNP Calculation 3-E-08-002, "Pressurizer SRV, PORV and Block Valve Operability."

5.2.2-4 Generic Letter 88-11, "NRC Position on Radiation Embrittlement of Reactor Vessel Materials and its Impact on Plant Operations," July 12, 1988.

5.2.2-5 Letter from B.C. Waldrep (Duke Energy) to NRC (Serial HNP-15-038) dated December 17, 2015, "License Amendment Request for Main Steam Safety Valve Lift

Setting Tolerance Change." (Safety Evaluation Report received by letter dated July 25, 2016).

5.2.3-1 "Dynamic Fracture Toughness of ASME SA-508 Class 2a and ASME SA 533 Grade A Class 2 Base and Heat Affected Zone Material and Applicable Weld Metals," WCAP-9292, March, 1978.

5.2.3-2 Golik, M. A., "Sensitized Stainless Steel in Westinghouse PWR Nuclear Steam Supply Systems," WCAP-7735, August, 1971.

5.2.3-3 Enrietto, J. F., "Control of Delta Ferrite in Austenitic Stainless Steel Weldments," WCAP-8324-A, June, 1974.

5.2.3-4 Enrietto, J. F., "Delta Ferrite in Production Austenitic Stainless Steel Weldments," WCAP-8693, January, 1976.

5.2.3-5 Letter NS-CE-1730, dated March 17, 1978, C. Eicheldinger (Westinghouse) to J. F. Stolz (NRC).

5.3 REACTOR VESSEL

5.3.1 REACTOR VESSEL MATERIALS

5.3.1.1 Material Specifications

Material specifications are in accordance with the ASME Code requirements and are given in Section 5.2.3.

The ferritic materials of the reactor vessel beltline are restricted to the following maximum limits of copper, phosphorous, and nickel to reduce sensitivity to irradiation embrittlement in service:

Element	Base Metal (wt%)	As Deposited Weld Metal (wt%)
Copper	0.10 (Ladle)	0.10
	0.12 (Check)	
Phosphorous	0.012 (Ladle)	
	0.017 (Check)	0.015
Nickel	Not specified	Not Specified

5.3.1.2 Special Processes Used for Manufacturing and Fabrication

1. The vessel is Safety Class 1. Design and fabrication of the reactor vessel is carried out in strict accordance with ASME Code, Section III, Class 1 requirements in effect prior to the issuance of 10 CFR 50, Appendix G. However, the intent of Appendix G requirements was satisfied originally since Chicago Bridge and Iron met the requirements of NA-4220 by

schooling and training of personnel performing fracture toughness tests; and trained and qualified personnel supervised all testing. The vessel head flanges, and nozzles are manufactured as forgings. The cylindrical portion of the vessel is made up of several shells, each consisting of formed plates joined by full penetration longitudinal and girth weld seams. The hemispherical heads are made from dished plates. The reactor vessel parts are joined by welding, using the single or multiple wire submerged arc and the shielded metal arc processes.

A baseline Appendix G calculation was created for the reactor vessel and then modified to account for the uprating changes. The reactor vessel has been shown to be in compliance with the fracture integrity design requirements of Appendix G after completion of the steam generator replacement and uprating.

2. The use of severely sensitized stainless steel as a pressure boundary material has been prohibited and has been eliminated by either a select choice of material or by programming the method of assembly.

3. The control rod drive mechanism head adaptor threads and surfaces of the guide studs are chrome plated to prevent possible galling of the mated parts.

4. At all locations in the reactor vessel where stainless steel and inconel are joined, the final joining beads are inconel weld metal in order to prevent cracking.

5. The location of full penetration weld seams in the upper closure head and vessel bottom head are restricted to areas that permit accessibility during inservice inspection.

6. The stainless steel clad surfaces are sampled to assure that composition requirements are met.

7. Minimum preheat requirements have been established for pressure boundary welds using low alloy material. The preheat is maintained until either an intermediate post-weld heat treatment or a full post-weld heat treatment is completed.

8. Reactor vessel surveillance material was post-weld heat treated by an equivalent process as was used in vessel fabrication, as required by ASTM E 185 82, paragraph 5.6, which is required by reference in 10 CFR 50, Appendix H, paragraph II.B.1.

5.3.1.3 Special Methods for Nondestructive Examination

The nondestructive examination of the reactor vessel and its appurtenances has been conducted in accordance with ASME Code, Section III requirements; also numerous examinations have been performed in addition to ASME Code, Section III requirements. Nondestructive examination of the vessel is discussed in the following paragraphs and the reactor vessel quality assurance program is given in Table 5.3.1-1.

5.3.1.3.1 Ultrasonic examination

1. In addition to the design code straight beam ultrasonic test, angle beam inspection over 100 percent of one major surface of plate material is performed during fabrication to detect discontinuities that may be undetected by the straight beam examination.

2. In addition to the ASME Code, Section III non-destructive examination, the plate material in the reactor vessel beltline is ultrasonically examined in accordance with ASME Code, Section XI after hydrotesting.

3. After hydrotesting, all full penetration ferritic pressure boundary welds in the reactor vessel, as well as the nozzle safe end weld build up, are ultrasonically examined in accordance with ASME Code Section XI. These inspections are also performed in addition to the ASME Code, Section III nondestructive examinations.

5.3.1.3.2 Penetrant examinations

The partial penetration welds for the control rod drive mechanism head adaptors and vent pipe to head weld are inspected by dye penetrant after the root pass and each 1/4 inch of weld during original fabrication. For RVCH CRDM Nozzles repaired by IDTB welding, the completed partial penetration weld is ultrasonically examined and dye penetrant examined. The bottom instrumentation tubes are inspected by dye penetrant after the root pass and each layer. Core support block attachment welds are inspected by dye penetrant after the first layer of weld metal and after each 1/2 inch of weld metal. All clad surfaces and other vessel and head internal surfaces are inspected by dye penetrant after the hydrostatic test.

5.3.1.3.3 Magnetic Particle Examination

The magnetic particle examination requirements below are in addition to the magnetic particle examination requirements of Section III of the ASME Code.

All magnetic particle examinations of materials and welds are performed in accordance with the following:

a) Prior to the final post-weld heat treatment - Only by the Prod, Coil or Direct Contact Method.

b) After the final post-weld heat treatment - Only by the Yoke Method.

The following surfaces and welds are examined by magnetic particle methods. The acceptance standards are in accordance with Section III of the ASME Code.

<u>Surface Examinations</u>

a) Magnetic particle examination of all exterior vessel and head surfaces after the hydrostatic test.

b) Magnetic particle examination of all exterior closure stud surfaces and all nut surfaces after final matching or rolling. Continuous circular and longitudinal magnetization is used.

c) Magnetic particle examination of all inside diameter surfaces of carbon and low alloy steel products that have their properties enhanced by accelerated cooling. This inspection is performed after forming and machining (if performed) and prior to cladding.

<u>Weld Examination</u>

Magnetic particle examination of the weld metal build-up for vessel support welds attaching the closure head lifting lugs and refueling seal ledge to the reactor vessel after the first layer and each 1/2 inch of weld metal is deposited. All pressure boundary welds are examined after back chipping or back grinding operations.

5.3.1.4 Special Controls for Ferritic and Austenitic Stainless Steels

Welding of ferrite steels and austenitic stainless steels is discussed in Section 5.2.3.

5.3.1.5 Fracture Toughness

Assurance of adequate fracture toughness of ferritic materials in the reactor vessel (ASME Code, Section III, Class 1 component) is provided by compliance with the requirements for fracture toughness testing included in NB-2300 to Section III of the ASME Code and Appendix G of 10 CFR 50 with the following exception. Four heats of electrodes used for manual metal arc welds in non-beltline region welds were not tested as required by NB-2300. A review of test welds made using the same type of electrodes used in fabricating welds in the Unit 1 vessel (using the same material specification and processed to an equivalent metallurgical heat-treated condition) showed that all welds exhibited an RT_{NDT} of -20°F or less. Since this representative material exhibited RT_{NDT} values of -20°F or less, exemption from testing the four heats of manual metal arc electrodes used in nonbeltline region welds with estimated RT_{NDT} of 10°F is considered to be justified.

The initial Charpy V-notch (CVN) minimum upper shelf fracture energy levels for reactor vessel beltline materials (including welds) are over 75 ft. lb. as required per Appendix G of 10 CFR 50, except for one beltline region plate which has an upper shelf energy of 71 ft. lb. Based on Regulatory Guide 1.99 and predictions of upper shelf decrease, this plate is expected to exhibit at least 50 ft. lb. at end of life. All reactor vessel base metal was CVN impact tested to the orientation requirements of NB-2322 and test requirements of NB-2330 of the Summer 1972 Addenda of the 1971 ASME Code. The vessel base material fracture toughness data is provided in Table 5.3.1-2. Beltline region material information is provided in Figure 5.3.1-1 and Tables 5.3.1-6 through 5.3.1-8. Tables 5.3.1-2, 5.3.1-6 and 5.3.1-7 also include "best estimate" copper and nickel content per the requirements of NRC GL 92-01, Revision 1, Supplement 1. Beltline region fracture toughness information for the 60-year renewed license term is discussed in Chapter 18.

5.3.1.6 Material Surveillance

In the surveillance program, the evaluation of the radiation damage is based on pre irradiation testing of Charpy V-notch and tensile specimens and post irradiation testing of Charpy V-notch and tensile test specimens. 1/2 T (thickness) compact tension (CT) fracture toughness test specimens are also available for future testing. The program is directed toward evaluation of the effect of radiation on the fracture toughness of reactor vessel steels based on the transition temperature approach and the fracture mechanics approach. The program will conform with ASTM E 185-82, "Standard Practice for Surveillance Tests for Light-Water Cooled Nuclear Power Reactor Vessels E 706 (IF)," and 10 CFR 50, Appendix H.

The reactor vessel surveillance program uses six specimen capsules. The capsules are located in guide baskets welded to the outside of the neutron shield pads and are positioned directly opposite the center portion of the core. Figure 5.3.1-3 indicates the azimuthal location for each

capsule relative to the reactor core. The capsules can be removed when the vessel head is removed and can be replaced when the internals are removed. The six capsules contain reactor vessel steel specimens, oriented both parallel and normal (longitudinal and transverse) to the principal rolling direction of the limiting base material located in the core region of the reactor vessel and associated weld metal and weld heat-affected zone (HAZ) metal. The six capsules contain 54 tension test specimens (longitudinal plate, transverse plate, and weld metal), 360 Charpy V-notch impact test specimens (longitudinal plate, transverse plate, weld metal, and HAZ metal), 72 compact fracture toughness specimens (longitudinal plate, transverse plate, and weld metal), and 6 bend bars (transverse plate). Archive material sufficient for two additional capsules will be retained.

Dosimeters, including Ni, Cu, Fe, Co-Al, CD shielded Co-Al, CD shielded Np-237, and Cd shielded U-238, are placed in filler blocks drilled to contain them. The dosimeters permit evaluation of the flux seen by the specimens and the vessel wall. In addition, thermal monitors made of low melting point alloys are included to monitor the maximum temperature of the specimens. The specimens are enclosed in a tight fitting stainless steel sheath to prevent corrosion and ensure good thermal conductivity.

The complete capsule is helium leak tested. As part of the surveillance program, a report of the residual element content in weight percent to the nearest 0.01 percent has been made for surveillance material and as deposited weld metal. (See Tables 5.3.1-6 and 5.3.1-7.)

Each of the six capsules contains the following specimens:

Material	Heat No.****	Code No.	Number of Charpys	Number of Tensiles	Number of CT's	Number of Bend Bars
Limiting Base Material*	B4197-2	11-2	15	3	4	
Limiting Base Material**	B4197-2	11-2	15	3	4	1
Weld Metal***		AB	15	3	4	
Heat-Affected Zone	B4197-2	11-2	15	-	-	

*Specimens oriented in the major rolling or working direction.

**Specimens oriented normal to the major rolling or working direction.

***Weld metal selected per ASTM-E-185 (Fabricated from type INMM Weld Wire Heat No. 5P6771 and Linde 124 Flux Lot No. 0342 Heat Treated at 1150F – 10 1/4 Hrs - furnace cooled).

****Heat Treatment of Plate B4197-2 is: 1600F - 4Hr - water quench

1250F - 4Hr - air cool

1050F - 4Hr - air cool

1150F - 35 3/4Hr - furnace cooled

The following dosimeters and thermal monitors are included in each of the six capsules:

Dosimeters

Iron
Copper
Nickel
Cobalt-Aluminum (0.15 percent Co)
Cobalt-Aluminum (Cadmium shielded)
U-238 (Cadmium shielded)
Np-237 (Cadmium shielded)

Thermal Monitors

97.5 percent Pb, 2.5 percent Ag (579 F Melting Point)
97.5 percent Pb, 1.5 percent Ag, 1.0 percent Sn (590 F Melting Point)

The fast neutron exposure of the specimens occurs at a faster rate than that experienced by the vessel wall, with the specimens being located between the core and the vessel. Since these specimens experience accelerated exposure and are actual samples from the materials used in the vessel, the transition temperature shift measurements are representative of the vessel at a later time in life. Data from CT fracture toughness specimens are expected to provide additional information for use in determining allowable stresses for irradiated material.

Correlations between the calculations and the measurements of the irradiated samples in the capsules, assuming the same neutron spectrum at the samples and the vessel inner wall, are described in Section 5.3.1.6.1. They have indicated good agreement. The anticipated degree to which the specimens will perturb the fast neutron flux and energy distribution, will be considered in the evaluation of the surveillance specimen data. Verification and possible readjustment of the calculated wall exposure will be made by use of data on all capsules withdrawn. The schedule for removal of the capsules for post-irradiation testing conforms with ASTM-E185-82 and Appendix H of 10 CFR 50. Capsule withdrawal will be in accordance with the following schedule. As of October 1999, capsules U, V, and X have been withdrawn and tested.

Capsule Iden.	Vessel Location	Lead Factor	Withdrawal Time (EFPY)	Estimated Capsule Fluence (n/cm^2)	Actual Capsule Fluence (n/cm^2)
U	343°	2.9	1st Refueling	0.8×10^{19}	0.55×10^{19}
V	107°	3.3	3	1.9×10^{19}	1.32×10^{19}
X	287°	2.68	9	3.4×10^{19}	3.25×10^{19}

Capsule Iden.	Vessel Location	Lead Factor	Withdrawal Time (EFPY)	Estimated Capsule Fluence (n/cm^2)	Actual Capsule Fluence (n/cm^2)
W	110°	2.38[a] 2.68[b]	18*	6.8×10^{19}	
Y	290°	2.38[a] 2.68b	Standby	--------	
Z	340°	2.38[a] 2.68b	Standby	--------	

* Nominal values only, a range of withdrawal times and fluences are applicable, See Table 16.3-3. (Based on Reference 5.3.1-4)

[a] Factor by which the capsule leads the vessel's maximum inner wall fluence for cycles 1 through 10.

[b] Factor by which the capsule leads the vessel's maximum inner wall fluence for cycles 11 through 55 EFPY (Based on Reference 5.3.1-6.) Lead factor updated based on operation at an uprated core power level of 2900 MWt and due to the equilibrium loading pattern near the periphery for uprated power conditions.

The estimated peak reactor vessel 36 EFPY fluence (assuming a 90% average lifetime capacity factor) for the reactor vessel beltline material is:

Vessel Inside Wetted Surface- 4.65×10^{19} n/cm^2

Vessel 1/4 Wall Thickness - 2.66×10^{19} n/cm^2

Vessel 3/4 Wall Thickness - 6.61×10^{18} n/cm^2

The above fluence estimates for the capsules (after 9 EFPY) and for 36 EFPY, assume a low leakage fuel loading pattern (old fuel on periphery, new fuel in the center) through Cycle 10 and a 4.5% (to 2900 MWt power uprate (once burned assemblies on or close to the core periphery and two fresh fuel assemblies per quadrant on the core periphery) beginning in Cycle 11. Fluence values for the 60-year renewed license are discusssed in Chapter 18.5.3.1.6.1 Fast neutron (E >1.0 MeV) flux at capsule location and reactor vessel wall. To determine the correlation between fast neutron(E >1.0 MeV) exposure and the radiation induced properties changes observed in the test specimens, a number of fast neutron flux monitors are included as an integral part of the reactor vessel surveillance program. In particular, the surveillance capsules contain dosimeters employing the following reactions.

$Fe^{54}(n,P)\ Mn^{54}$

$Ni^{58}(n,P)\ Co^{58}$

$Cu^{63}\ (n, \alpha)\ Co^{60}$

$Np^{237}\ (n,f)\ Cs^{137}$

$U^{238}\ (n,f)\ Cs^{137}$

In addition, thermal neutron flux monitors, in the form of bare and cadmium shielded Co-Al wire, are included within the capsules to enable an assessment of the effects of isotopic burnup on the response of the fast neutron detectors.

The use of activation dosimeters such as those listed above does not yield a direct measure of the energy dependent neutron flux level at the point of interest. Rather, the activation process is a measure of the integrated effect that the time and energy dependent neutron flux has on the target material.

An accurate estimate of the average neutron flux level incident on the various dosimeters is derived from the discrete transport code DORT.

A calculational based methodology (Reference 5.3.1-5) is used to calculate the surveillance capsule and reactor pressure vessel flux. The method employs explicit modeling of the surveillance capsule, reactor pressure vessel, and internals, and uses time-weighted, average pin-by-pin power distributions in the two-dimensional DORT computer code (Reference 5.3.1-1). DORT is a two-dimensional discrete ordinates code which calculates the energy and space dependent neutron flux at all points of interest in the specific reactor system configuration.

The calculational models involve a R-theta (Rθ) and R-Z (RZ) geometric representation of the reactor using one-eighth symmetry. These Rθ and RZ models are then "synthesized" to produce three-dimensional fluxes at all points of interest. The models include the core with time averaged power distributions, core baffle, coolant regions, core barrel, neutron shields, and pressure vessel. Each DORT run utilized a third order Legendre expansion (P3) of the scattering cross sections from the BUGLE-93 cross section set, a minimum of forty-eight directions (S_8 quadrature), and the appropriate boundary conditions (Reference 5.3.1-2). The P_3 order of scattering adequately describes the predominantly forward scattering of neutrons observed in the deep penetration of steel and water media. This calculation provides the neutron flux as a function of energy at the capsule and dosimeter position which is then used to calculate the specific activity using the BUGLE-93 dosimeter reaction cross sections (Reference 5.3.1-3). The calculated activity of each dosimeter is then adjusted by a series of correction factors to account for effects which bias the calculated results. These corrections include:

- non-saturation of the dosimeter
- photon-induced fission in U and Np dosimeters
- short half-life of isotopes produced in Fe and Ni dosimeters
- ^{239}Pu generated in the ^{238}U dosimeter

These calculated activities are used for comparison with the measured dosimeter activity values. The basic equation for the calculated activity (μCi/g) is

$$D_i = \frac{N}{A_n\, 3.7 \times 10^4} f_i \sum_E \sigma_n\,(E)\varphi(E) \sum_{j=1} F_j \left(1 - e^{-\lambda_i t_j}\right) e^{-\lambda_i\,(T-\tau_j)}$$

where:

n = Avogadro's number,

A_n = atomic weight of target material n,

f_i = either weight fraction of target isotope in nth material or fission yield of desired isotope,

$\sigma_n\,(E)$ = group-averaged cross sections for material n

$\varphi(E)$ = group-averaged fluxes calculated by DOT analysis,

F_j = fraction of full power during jth time interval tj,

λ_i = decay constant of ith material,

t_j = length of the jth time period,

T = sum of total irradiation time, i.e., residual time in reactor and wait time between reactor shutdown and counting,

τ_j = cumulative time from reactor startup to end of jth time period, i.e.,

$$\tau_j = \sum_{k=1}^{j} t_k$$

The specific results of these calculations are included in the specific capsule evaluation reports. (Reference 5.3.1-4)

5.3.1.7 Reactor Vessel Fasteners

The reactor vessel closure studs, nuts, and washers are designed and fabricated in accordance with the requirements of the ASME Code, Section III. The closure studs are fabricated of SA-540, Grade B23 or B24 (as modified by Code Case 1605). The closure stud material meets the fracture toughness requirements of the ASME Code, Section III and 10 CFR 50, Appendix G. Nondestructive examinations are performed in accordance with the ASME Code, Section III. Bolting materials fracture toughness data are provided in Table 5.3.1-18. Compliance with Regulatory Guide 1.65 is discussed in Section 1.8.

Refueling procedures ordinarily require the studs, nuts, and washers to be removed with the reactor vessel head. The head is then removed from the refueling cavity and stored at a convenient location on the containment operating deck prior to refueling cavity flooding. Therefore, the reactor closure studs are normally never exposed to the borated refueling cavity

water. Additional protection against the possibility of incurring corrosion effects is assured by the use of a manganese base phosphate surfacing treatment. (See Section 1.8)

The stud holes in the reactor flange are sealed with special plugs before removing the reactor vessel head, thus preventing leakage of the borated refueling water into the stud holes.

5.3.1.8 Pressurized Thermal Shock

Calculations of RT_{PTS} have been performed as required by 10 CFR 50.61, Fracture Toughness Requirements for Protection Against Pressurized Thermal Shock. As defined in 10 CFR 50.61, "Reactor Vessel Beltline Material" consists of two intermediate shells, two lower shells, and associated weld metal for the SHNPP reactor vessel.

Data used in calculating RT_{PTS} for the reactor vessel beltline materials is obtained from Table 5.3.1-2 - Reactor Vessel Toughness Properties, Table 5.3.1 6 - Chemical Composition of Reactor Vessel Beltline Region Base Material, and Table 5.3.1-7 - Reactor Vessel Beltline Region Weld Metal. These tables include "best estimate" copper and nickel values per CP&L response to NRC GL 92 01, Rev. 1, Supplement 1.

The source of the copper and nickel values, except "best estimate" values, in FSAR Table 5.3.1-6 is the Certified Test Report supplied by the vessel fabricator (CBI - Chicago Bridge & Iron) with chemical analysis by Lukens Steel Company, and documented as part of the Materials Certification Report.

The values reported on the Certified Test Report were obtained from samples of the actual beltline material.

Plates: Amounts of residual elements in the beltline plate were measured from samples removed from actual beltline plates.

Welds: Samples were prepared using the same heat, lot, and flux as the materials used in the vessel welds.

Actual initial RT_{NDT} values measured in accordance with ASME Code, Paragraph NB 2331, have been used.

The calculated results of RT_{PTS} are listed in Table 5.3.1-22 and as shown, the SHNPP reactor vessel beltline materials fall below the screening criterion of 10 CFR 50.61. RT_{PTS} values have been projected through the 60-year renewed license period as discussed in Chapter 18.

5.3.2 PRESSURE – TEMPERATURE LIMITS

5.3.2.1 Limit Curves

Startup and shutdown operating limitations are based on the properties of the reactor vessel materials (Reference 5.3.2-1). Actual material property test data (based on Reference 5.3.1-4) as presented in Section 5.3.1, is used. The methods outlined in Appendix G to Section XI of the ASME Code, and ASME Code Case N-640, are employed for the shell and nozzle regions in the analysis of protection against non-ductile failure. The heatup and cooldown curves are given in the Technical Specifications. Beltline material properties degrade with radiation

exposure, and this degradation is measured in terms of the adjusted reference nil-ductility temperature which includes a reference nil-ductility temperature shift (ΔRT_{NDT}).

Predicted ΔRT_{NDT} values are derived using two factors: the effect of nickel and copper content for the reactor vessel beltline materials, and the maximum fluence at the 1/4 T (thickness) and 3/4 T location (tips of the code reference flaw when flaw is assumed at inside diameter and outside diameter locations, respectively). The fluence factor is derived for the location selected using the fluence predicted at the end of the operating period desired and the calculative procedure of Regulatory Guide 1.99. The fluence at any given operating period is presented as a series of curves in the Bases of the Technical Specifications. The copper and nickel content is used to select a chemistry factor contained in Regulatory Guide 1.99. This Regulatory Guide also provides calculative procedures to derive ΔRT_{NDT} based upon the fluence factor and the chemistry factor. An adjusted reference nil-ductility temperature (ART_{NDT}), is also calculated for the operating period desired. This is the summation of the initial RT_{NDT}, the shift ΔRT_{NDT} and a specified margin (per R.G. 1.99). No unirradiated ferritic materials in the Reactor Coolant System (RCS), other than the reactor vessel inlet nozzle, will be limiting in the analysis.

The operating curves (pressure-temperature limitations) are calculated in accordance with 10 CFR 50, Appendix G and ASME Code, Section XI, Appendix G, requirements. (Reference 5.3.2-2) ASME Code Case N-640 is also applied to these calculations. Changes in fracture toughness of the core region plates or forgings, weldments and associated heat-affected zones due to radiation damage will be monitored by a surveillance program which conforms with ASTM E 185-82, "Standard Practice for Surveillance Tests for Light-Water Cooled Nuclear Power Reactor Vessels E-706(IF)", and 10 CFR 50, Appendix H. The evaluation of the radiation damage in this surveillance program is based on pre-irradiation testing of Charpy V-notch and tensile specimens and post-irradiation testing of Charpy V-notch and tensile test specimens. 1/2 T compact tension specimens are also available for future testing. The post-irradiation testing will be carried out during the lifetime of the reactor vessel. Specimens are irradiated in capsules located near the core midheight and removable from the vessel at specified intervals.

The results of the radiation surveillance program will be used to verify that the ΔRT_{NDT} predicted from the effects of the fluence and copper/nickel content is appropriate and to make any changes necessary if ΔRT_{NDT} determined from the surveillance program is greater than the predicted ΔRT_{NDT}. Temperature limits for preservice hydrotests and inservice leak and inservice hydrotests are also calculated in accordance with 10 CFR 50, Appendix G.

Compliance with Regulatory Guide 1.99, "Radiation Embrittlement of Reactor Vessel Materials," is discussed in Section 1.8.

The pressure-temperature limits analysis has been projected to the end of the period of extended operation as discussed in Chapter 18.

5.3.2.2 Operating Procedures

The transient conditions that are considered in the design of the reactor vessel are presented in Section 3.9.1.1. These transients are representative of the operating conditions that should prudently be considered to occur during plant operation. The transients selected form a conservative basis for evaluation of the RCS to ensure the integrity of the RCS equipment.

Those transients listed as upset condition transients are given in Table 3.9.1-1. None of these transients will result in pressure-temperature changes which exceed the heatup and cooldown limitations as described in Section 5.3.2.1 and in the Technical Specifications.

5.3.3 REACTOR VESSEL INTEGRITY

5.3.3.1 Design

The reactor vessel is cylindrical with a welded hemispherical bottom head and a removable, bolted, flanged and gasketed, hemispherical upper head. The reactor vessel flange and head are sealed by two hollow metallic O-rings. Seal leakage is detected by means of two leakoff connections: one between the inner and outer ring and one outside the outer O-ring. The vessel contains the core, core support structures, control rods, and other parts directly associated with the core. The reactor vessel closure head contains head adaptors. These head adaptors are tubular members, attached by partial penetration welds to the underside of the closure head. For head adaptor welds that are repaired by Inside Diameter Temper Bead (IDTB) weld, the lower portion of the tubular member is removed and the remaining portion is attached by a partial penetration weld within the closure head bore. The upper ends of these adaptors contain acme threads for the assembly of control rod drive mechanisms or instrumentation adaptors. The seal arrangement at the upper end of these adaptors consists of a welded flexible canopy seal. Inlet and outlet nozzles are located symmetrically around the vessel. Outlet nozzles are arranged on the vessel to facilitate optimum layout of the RCS equipment. The inlet nozzles are tapered from the coolant loop vessel interfaces to the vessel inside wall to reduce loop pressure drop.

The bottom head of the vessel contains penetration nozzles for connection and entry of the nuclear incore instrumentation. Each nozzle consists of a tubular member made of either an inconel or an inconel stainless steel composite tube. Each tube is attached to the inside of the bottom head by a partial penetration weld.

Internal surfaces of the vessel which are in contact with primary coolant are weld overlaid with 0.125 in. minimum of stainless steel or inconel with exception of RVCH Nozzles repaired using IDTB weld process, where a portion of the RVCH low alloy steel base metal within the bore of the RVCH nozzle penetration is exposed to the reactor coolant. The exterior of the reactor vessel is insulated with two types of insulation. The majority of the insulation is canned stainless steel reflective sheets that are a minimum of three inches thick and contoured to match the vessel geometry. In the highest neutron leakage portion of the vessel, a high efficiency, high temperature insulation bonded to a layer of neutron attenuation material of varying thickness is used. All of the insulation and insulation/shielding modules are removable but the access to the insulation/shielding is limited by the surrounding concrete.

The reactor vessel is designed and fabricated in accordance with the requirements of the ASME Code, Section III.

Principal design parameters of the reactor vessel are given in Table 5.3.3-1. The reactor vessel schematic is shown in Figure 5.3.3-1.

There are no special design features which would prohibit the in situ annealing of the vessel. If the unlikely need for an annealing operation was required to restore the properties of the vessel material opposite the reactor core because of neutron irradiation damage, a metal temperature

greater than 650 F for a period of 168 hours maximum would be applied. Various modes of heating may be used depending on the temperature required.

The reactor vessel materials surveillance program is adequate to accommodate the annealing of the reactor vessel. Sufficient specimens are available to evaluate the effects of the annealing treatment.

Cyclic loads are introduced by normal power changes, reactor trip, startup, and shutdown operations. These design base cycles are selected for fatigue evaluation and constitute a conservative design envelope for the projected plant life. Vessel analysis results in a usage factor that is less than 1.

The design specifications require analysis to prove the vessel is in compliance with the fatigue and stress limits of the ASME Code, Section III. The loadings and transients specified for the analysis are based on the most severe conditions expected during service. The heatup and cooldown rates imposed by plant operating limits are listed in the plant Technical Specifications.

5.3.3.2 Materials of Construction

The materials used in the fabrication of the reactor vessel are discussed in Section 5.3.1.

5.3.3.3 Fabrication Methods

The reactor vessel manufacturer is Chicago Bridge and Iron Company.

The fabrication methods used in the construction of the reactor vessel are described in Section 5.3.1.2.

5.3.3.4 Inspection Requirements

The nondestructive examinations performed on the reactor vessel are described in Section 5.3.1.3.

5.3.3.5 Shipment and Installation

The reactor vessel is shipped in a horizontal position on a shipping sled with a vessel lifting truss assembly. All vessel openings are sealed to prevent the entrance of moisture and an adequate quantity of desiccant bags is placed inside the vessel. These are usually placed in a wire mesh basket attached to the vessel cover. All carbon steel surfaces are painted with a heat-resistant paint before shipment except for the vessel support surfaces and the top surface of the external seal ring.

The closure head is also shipped with a shipping cover and skid. An enclosure attached to the ventilation shroud support ring protects the control rod mechanism housings. All head openings are sealed to prevent the entrance of moisture and an adequate quantity of desiccant bags is placed inside the head. These are placed in a wire mesh basket attached to the head cover. All carbon steel surfaces are painted with heat-resistant paint before shipment. A lifting frame is provided for handling the vessel head.

5.3.3.6 Operating Conditions

Operating limitations for the reactor vessel are presented in Section 5.3.2, as well as in the Technical Specifications.

In addition to the analysis of primary components discussed in Section 3.9.1.4, the reactor vessel is further qualified to ensure against unstable crack growth under faulted conditions. Actuation of the Emergency Core Cooling System (ECCS) following a loss-of-coolant accident produces relatively high thermal stresses in regions of the reactor vessel which come into contact with ECCS water. Primary consideration is given to these areas, including the reactor vessel beltline region and the reactor vessel primary coolant nozzle, to ensure the integrity of the reactor vessel under this severe postulated transient.

The principles and procedures of linear elastic fracture mechanics (LEFM) are used to evaluate thermal effects in the regions of interest. The LEFM approach to the design against failure is basically a stress intensity consideration in which criteria are established for fracture instability in the presence of a crack. Consequently, a basic assumption employed in LEFM is that a crack or crack-like defect exists in the structure. The essence of the approach is to relate the stress field developed in the vicinity of the crack tip to the applied stress on the structure, the material properties, and the size of defect necessary to cause failure.

The elastic stress field at the crack tip in any cracked body can be described by a single parameter designated as the stress intensity factor K. The magnitude of the stress intensity factor K is a function of the geometry of the body containing the crack, the size and location of the crack, and the magnitude and distribution of the stress.

The criterion for failure in the presence of a crack is that failure will occur whenever the stress intensity factor exceeds some critical value. For the opening mode of loading (stresses perpendicular to the major plane of the crack) the stress intensity factor is designated as KI and the critical stress intensity factor is designated KIC. Commonly called the fracture toughness, KIC is an inherent material property which is a function of temperature and strain rate. An combination of applied load, structural configuration, crack geometry and size which yields a stress intensity factor KIC for the material will result in crack instability.

The criterion of the applicability of LEFM is based on plasticity considerations at the postulated crack tip. Strict applicability (as defined by ASTM) of LEFM to large structures where plane strain conditions prevail requires that the plastic zone developed at the tip of the crack does not exceed 2.25 percent of the crack depth. In the present analysis, the plastic zone at the tip of the postulated crack can reach 20 percent of the crack depth. However, LEFM has been successfully used to provide conservative brittle fracture prevention evaluations, even in cases where strict applicability of the theory is not permitted due to excessive plasticity. Recently, experimental results from Heavy Section Steel Technology (HSST) Program intermediate pressure vessel tests have shown that LEFM can be applied conservatively as long as the pressure component of the stress does not exceed the yield strength of the material. The addition of the thermal stresses, calculated elastically, which results in total stresses in excess of the yield strength does not affect the conservatism of the results, provided that these thermal stresses are included in the evaluation of the stress intensity factors. Therefore, for faulted condition analyses, LEFM is considered applicable for the evaluation of the vessel inlet nozzle and beltline region.

In addition, it has been well established that the crack propagation of existing flaws in a structure subjected to cyclic loading can be defined in terms of fracture mechanics parameters. Thus, the principles of LEFM are also applicable to fatigue growth of a postulated flaw at the vessel inlet nozzle and beltline region.

An example of a faulted condition evaluation carried out according to the procedure discussed above is given in Reference 5.3.3-1. This report discusses evaluation procedure in detail as applied to a severe faulted condition (a postulated loss-of-coolant accident), and concludes that the integrity of the reactor pressure boundary would be maintained in the event of such an accident.

5.3.3.7 Inservice Surveillance

The internal surface of the reactor vessel can be inspected periodically by using visual and/or nondestructive techniques over the accessible areas. During refueling, the vessel cladding can be inspected in certain areas between the closure flange and the primary coolant inlet nozzles and, if deemed necessary, the core barrel can be removed, making the entire inside vessel surface accessible.

The closure head can be examined visually. Optical devices permit a selective inspection of the cladding, control rod drive mechanism nozzles, and the gasket seating surface. The knuckle transition, which is the area of highest stress of the closure head, is accessible on the outer surface for visual inspection, dye penetrant, magnetic particle, and ultrasonic testing. The closure studs can be inspected periodically by using visual, magnetic particle, and ultrasonic techniques.

The closure studs, nuts, washers, and the vessel flange seal surface, as well as the full penetration welds in the following areas of the installed reactor vessel are available for nondestructive examination:

a) Vessel shell - from the inside surface.

b) Primary coolant nozzles - from the inside surface.

c) Closure head - from the inside and outside surfaces. Bottom head - from the inside and outside surfaces.

d) Field welds between the reactor vessel nozzle safe ends and the main coolant piping - from the inside and outside surfaces.

The design considerations which have been incorporated into the system design to permit the above inspection are as follows:

a) All reactor internals are completely removable. The tools and storage space required to permit these inspections are provided.

b) The closure head is stored dry on the reactor operating deck during refueling to facilitate direct visual inspection.

c) All reactor vessel studs, nuts and washers can ordinarily be removed to dry storage during refueling. (See Section 1.8)

d) Primary coolant nozzle welds can be accessed directly, without requiring the removal of shielding devices. The insulation covering the nozzle-to-pipe welds may be removed.

The reactor vessel presents access problems because of the radiation levels and remote underwater accessibility to this component. Because of these limitations on access to the reactor vessel, several steps have been incorporated into the design and manufacturing procedures in preparation for the periodic nondestructive tests which are required by the ASME inservice inspection code. These are:

a) Shop ultrasonic examinations are performed on all internally clad surfaces to an acceptance and repair standard to assure an adequate cladding bond to allow later ultrasonic testing of the base metal from the inside surface. The size of cladding bond defect allowed is 1/4 in. by 3/4 in.

b) The design of the reactor vessel shell is an uncluttered cylindrical surface to permit future positioning of the test equipment without obstruction.

c) The weld deposited clad surface on both sides of the welds to be inspected is specifically prepared to assure meaningful ultrasonic examinations.

d) In addition to ASME Code, Section III requirements, all full penetration ferritic pressure boundary welds, as well as the nozzle to safe end welds, are ultrasonically examined after shop hydrostatic testing.

The vessel design and construction enables inspection in accordance with the ASME Code, Section XI, as described in Section 5.2.4.

REFERENCES SECTION 5.3:

5.3.1-1 BWNT-TM-107, "DORT, Two Dimensional Discrete Ordinates Transport Code," Ed. M. A. Rutherford, N.M. Hassan, et al., File Poit 2A4, May 1995.

5.3.1-2 "BUGLE 93 - Coupled 47 Neutron, 20 Gamma ray Group Cross-Section Library Derived from ENDF/B-VI for LWR Shielding and Pressure Vessel Dosimetry Applications," RSICC DLC-185.

5.3.1-3 FTG Document Number 32-1232719-00, "Bugle-93 Response Functions," J. R. Worsham, III, June 22, 1995.

5.3.1-4 M.J. DeVan and S.Q. King, "Analysis of Capsule X Carolina Power & Light Company Shearon Harris Nuclear Power Plant - Reactor Vessel Material Surveillance Program -," BAW-2355, Framatome Technologies, Inc., Lynchburg, Virginia, October 1999, and; Supplement 1, November 1999.

5.3.1-5 J.R. Worsham III, "Fluence and Uncertainty Methodologies", BAW-2241P, Revision 1, Framatome Technologies, Inc., Lynchburg, Virginia, April 1999.

5.3.1-6 S. B. Davidsaver and J. N. Byard, "Supplement to the Analysis of Capsule X, Progress Energy Shearon Harris Nuclear Power Plant, Reactor Vessel Material Surveillance Program," BAW-2355, Supplement 4, July 2007.

5.3.2-1 H. W. Behnke, et al., Methods of Compliance with Fracture Toughness and Operational Requirements of Appendix G to 10 CFR 50, BAW-10046A, Rev. 2, Babcock & Wilcox, Lynchburg, Virginia, June 1986.

5.3.2-2 D.E. Killian, "Pressure-Temperature Operation Limits for Carolina Power & Light Company, Shearon Harris Unit 1", Framatome Technologies Incorporated, BAW-2358, Revision 1, March 2000, and; Supplement 1, March 2000.

5.3.3-1 Buchalet, C. and Mager, T. R., "A Summary Analysis of the April 30 Incident at the San Onofre Nuclear Generating Station Unit 1," WCAP 8099, April 1973.

5.4 Component and Subsystem Design

5.4.1 REACTOR COOLANT PUPS

5.4.1.1 Design Bases

The reactor coolant pumps ensure an adequate core cooling flow rate for sufficient heat transfer to maintain a departure from nucleate boiling ratio (DNBR) greater than the limit DNBR within the parameters of operation. The required net positive suction head is by conservative pump design always less than that available by system design and operation.

Sufficient pump rotation inertia is provided by a flywheel, in conjunction with the pump and motor rotor assemblies, to provide adequate flow during coastdown. This forced flow following an assumed loss of pump power and the subsequent natural circulation effect provides the core with adequate cooling.

The reactor coolant pump motor is tested, without mechanical damage, at overspeeds up to and including 125 percent of normal speed. The integrity of the flywheel during a loss-of-coolant accident (LOCA) is demonstrated in Reference 5.4.1-1.

The reactor coolant pump is shown in Figure 5.4.1-1. The reactor coolant pump design parameters are given in Table 5.4.1-1.

Code and material requirements are provided in Section 5.2.3.

The effects of radiation on RCP components, and maintainability (seals) under radiation conditions, are discussed in Section 12.3.1.

5.4.1.2 Pump Assembly Description

5.4.1.2.1 Design description

The reactor coolant pump is a vertical, single stage, controlled leakage, centrifugal pump designed to pump large volumes of reactor coolant at high temperatures and pressures.

The pump assembly consists of three major sections. They are hydraulic suction, seals, and the motor.

a) The hydraulic section consists of the casing, thermal barrier, impeller, turning vane-diffuser, and diffuser adapter.

b) The seal section consists of three seals arranged in series. The first is a controlled leakage, film-riding seal; the second and third are rubbing-face seals. The seal system provides a pressure reduction from the reactor coolant system (RCS) pressure to ambient conditions.

c) The motor section consists of a drip-proof squirrel cage induction motor with a vertical solid shaft, an oil lubricated double-acting Kingsbury type thrust bearing, upper and lower oil lubricated radial guide bearings, and a flywheel.

Additional components of the pump are the shaft, pump radial bearing, thermal barrier heat exchanger assembly, coupling, spool piece, and motor stand.

5.4.1.2.2 Description of Operation

The reactor coolant enters the suction nozzle, is pumped by the impeller through the diffuser, and exits through the discharge nozzle. The diffuser adapter limits the leakage of reactor coolant back to the suction.

Seal injection flow, under slightly higher pressure than the reactor coolant, enters the pump through a connection on the main flange. Most of this injection water flows down through a cavity between the main flange and the thermal barrier and out through the heat exchanger into the Reactor Coolant System. The remaining injection water passes through the radial bearing and up through the seals.

Component cooling water is provided to the thermal barrier heat exchanger. During normal operation, the thermal barrier limits the heat transfer from hot reactor coolant to the radial bearing and to the seals. In addition, if a loss of seal injection flow should occur, the thermal barrier heat exchanger cools the reactor coolant to an acceptable level before it enters the bearing and seal area.

The reactor coolant pump motor bearings are of conventional design. The radial bearings are the segmented pad type, and the thrust bearing is a double-acting Kingsbury type. All are oil lubricated. Component cooling water is supplied to the external upper bearing oil cooler and to the integral lower bearing oil cooler.

The motor is an air cooled, Class B thermalastic epoxy insulated, squirrel cage induction motor. The rotor and stator are of standard construction. Six resistance temperature detectors are imbedded in the stator windings to sense stator temperature. A flywheel and an anti-reverse rotation device are located at the top of the motor.

The internal parts of the motor are cooled by air. Integral vanes on each end of the rotor draw air in through cooling slots in the motor frame. This air passes through the motor with particular emphasis on the stator end turns. It is then exhausted to the Containment.

Each of the reactor coolant pump assemblies is equipped for continuous monitoring of reactor coolant pump shaft and frame vibration levels. Shaft vibration is measured by two relative shaft probes mounted on top of the pump seal housing; the probes are located 90 degrees apart in the same horizontal plane and mounted near the pump shaft. Frame vibration is measured by two velocity seismoprobes located 90 degrees apart in the same horizontal plane and mounted at the top of the motor support stand. Proximeters and converters linearize the probe output which is displayed on monitor meters in the Control Room. The monitor meters automatically indicate the highest output from the relative probes and seismoprobes; manual selection allows monitoring of individual probes. Indicator lights display caution and danger limits of vibration.

The locked rotor protection system (LRPS) which is used in conjunction with the vibration motors provides positive trip protection for the RCP if the rotor fails to rotate on pump start or if the pump does not achieve the appropriate speed. The LRPS will protect against two abnormal motor starting conditions. Following initial energizing of the pump motor, if the rotor fails to rotate, a trip signal will be given. At the time when the motor should be at half speed, a second check will be made. If the rotor is not at approximately half speed at the specified time, a trip signal will be given. Following a successful start and after 30 seconds, the locked rotor circuit will be bypassed. The locked rotor monitoring system is fail-safe, which prohibits starting the motor if any component has failed or is out of service because of a loss of input power to the monitor.

A removable shaft segment, the spool piece, is located between the motor coupling flange and the pump coupling flange; the spool piece allows removal of the pump seals with the motor in place. The pump internals, motor, and motor stand can be removed from the casing without disturbing the reactor coolant piping. The flywheel is available for inspection by removing the cover.

All parts of the pump in contact with the reactor coolant are austenitic stainless steel except for seals, bearings and special parts.

5.4.1.3 Design Evaluation

5.4.1.3.1 Pump Performance

The reactor coolant pumps are sized to deliver flow at rates which equal or exceed the required flow rates. Initial RCS tests confirm the total delivery capability. Thus, assurance of adequate forced circulation coolant flow is provided prior to initial plant operation.

The estimated performance characteristic is shown in Figure 5.4.1-2. The "knee" at about 70 percent design flow introduces no operational restrictions, since the pumps operate at full flow.

The Reactor Trip System ensures that pump operation is within the assumptions used for loss of coolant flow analyses. These trips protect the core from DNB in the event of a loss of coolant flow situation. The means of sensing the loss of coolant flow are as follows:

Low reactor coolant flow - The parameter sensed is reactor coolant flow. Three flow sensors are installed in each loop. An output signal to the reactor trip logic will be produced if two-out-of-three sensors indicate low flow in a loop. Above the P-7 setpoint a reactor trip will occur if any two loops show low flow. Above the P-8 setpoint a trip will occur if any one loop shows low flow. A reactor coolant pump trip will result in low flow trip logic actuation for the affected loop.

Reactor coolant pump undervoltage trip - This trip is required in order to protect against low flow which can result from loss of voltage to more than one reactor coolant pump motor (e.g., from loss of offsite power or reactor coolant pump breakers opening).

Reactor coolant pump underfrequency trip - This trip protects against low flow resulting from pump underfrequency, for example due to a major power grid frequency disturbance.

An extensive test program has been conducted for several years to develop the controlled leakage shaft seal for pressurized water reactor applications. Long-term tests were conducted on less than full scale prototype seals as well as on full size seals. Operating plants continue to demonstrate the satisfactory performance of the controlled leakage shaft seal pump design.

The support of the stationary member of the number 1 seal ("seal ring") is such as to allow large deflections, both axial and tilting, while still maintaining its controlled gap relative to the seal runner. Even if all the graphite were removed from the pump bearing, the shaft could not deflect far enough to cause opening of the controlled leakage gap. The "spring-rate" of the hydraulic forces associated with the maintenance of the gap is high enough to ensure that the ring follows the runner under very rapid shaft deflections.

Testing of pumps with the number 1 seal entirely bypassed (full system pressure on the number 2 seal) has shown that relatively small leakage rates would be maintained for a period of time which is sufficient to secure the pump. Even if the number 1 seal fails entirely during normal operation, the number 2 seal would maintain these small leakage rates if the proper action is taken by the operator. The plant operator is warned of number 1 seal damage by the increase in number 1 seal leakoff rate. Following warning of excessive seal leakage conditions, the plant operator should close the number 1 seal leakoff line and secure the pump. Gross leakage from the pump does not occur if the proper operator action is taken subsequent to warning of excessive seal leakage conditions.

The effect of loss of offsite power on the pump itself is to cause a temporary stoppage in the supply of seal injection flow to the pump seals and also of the component cooling water for seal and bearing cooling. The emergency diesel generators are started automatically due to loss of offsite power so that component cooling flow is automatically restored promptly; seal injection flow is subsequently restored. In addition, the non-safety related Alternate Seal Injection (ASI) System (Ref. 9.3.8) provides a completely independent, automatically-actuated back-up seal injection system that is not reliant on the plant electrical or cooling systems.

5.4.1.3.2 Coastdown Capability

It is important to reactor protection that the reactor coolant continues to flow for a short time after reactor trip. In order to provide this flow during a loss of electrical power, each reactor coolant pump is provided with a flywheel. Thus, the rotating inertia of the pump, motor and flywheel is employed during the coastdown period to continue the reactor coolant flow. The coastdown flow transients are provided in the figures in Section 15.3. The pump/motor system is designed for the safe shutdown earthquake at the site. Hence, it is concluded that the coastdown capability of the pumps is maintained even under the most adverse case of loss of power coincident with the safe shutdown earthquake. Core flow transients and figures are provided in Sections 15.3.1 and 15.4.4.

5.4.1.3.3 Bearing Integrity

The design requirements for the reactor coolant pump bearings are primarily aimed at ensuring a long life with negligible wear, so as to give accurate alignment and smooth operation over long periods of time. The surface bearing stresses are held at a very low value and, even under the most severe seismic transients, do not begin to approach loads which cannot be adequately carried for short periods of time.

Because there are no established criteria for short time stress related failures in such bearings, it is not possible to make a meaningful quantification of such parameters as margins to failure or safety factors. A qualitative analysis of the bearing design, embodying such considerations, gives assurance of the adequacy of the bearings to operate without failure.

The oil reservoirs are equipped with level transmitters and level indicating switches. The level indicating switches are located outside containment such that they can be monitored during power operation. The switches also provide alarm functions in the control room. Each motor bearing contains embedded temperature detectors, which provide indication and alarm in the control room, such that a bearing failure (separate from or concurrent with a loss of oil) can be detected in the control room. A pump shutdown is required if a high bearing temperature alarm occurs, or if a low oil level alarm occurs coincident with a steady increase in bearing temperature. If these indications are ignored, and the bearing proceeds to failure, the low melting point of Babbitt metal on the pad surfaces ensures that sudden seizure of the shaft will not occur. In this event the motor continues to operate, as it has sufficient reserve capacity to drive the pump under such conditions. However, the high torque required to drive the pump will require high current which will lead to the motor being shut down by the electrical protection systems.

5.4.1.3.4 Locked rotor

It may be hypothesized that the pump impeller might severely rub on a stationary member and then seize. Analysis has shown that under such conditions, assuming instantaneous seizure of the impeller, the pump shaft fails in torsion just below the coupling to the motor, disengaging the flywheel and motor from the shaft. This constitutes a loss of coolant flow in the loop. Following such a postulated seizure, the motor continues to run without any overspeed, and the flywheel maintains its integrity, as it is still supported on a shaft with two bearings. Flow transients are provided in the figures in Section 15.3.3 for the assumed locked rotor.

There are no other credible sources of shaft seizure other than impeller rubs. A sudden seizure of the pump bearing is precluded by graphite in the bearing. Any seizure in the seals results in a shearing of the anti-rotation pin in the seal ring. The motor has adequate power to continue pump operation even after the above occurrences. Indications of pump malfunction in these conditions are initially by high temperature signals from the bearing water temperature detector and by excessive number 1 seal leakoff indications, respectively. Following these signals, pump vibration levels are checked. Excessive vibration indicates mechanical trouble and the pump is shutdown for investigation.

5.4.1.3.5 Critical speed

The reactor coolant pump shaft is designed so that its operating speed is below its first critical speed. This shaft design, even under the most severe postulated transient, gives low values of actual stress.

5.4.1.3.6 Missile generation

Precautionary measures taken to preclude missile formation from reactor coolant pump components assure that the pumps will not produce missiles under any anticipated accident condition. Appropriate components of the reactor coolant pump have been analyzed for missile generation. Any fragments of the motor rotor would be contained by the heavy stator. The same conclusion applies to the pump impeller because the small fragments that might be ejected would be contained by the heavy casing. Further discussion and analysis of of missile generation are contained in Reference 5.4.1-1.

5.4.1.3.7 Pump Cavitation

The minimum net positive suction head required by the reactor coolant pump at best estimate flow is approximately a 265-foot head (approximately 117 psi). In order for the controlled leakage seal to operate correctly, it is necessary to require a minimum differential pressure of approximately 200 psi across the number 1 seal. This corresponds to a primary loop pressure at which the minimum net positive suction head is exceeded and no limitation on pump operation occurs from this source.

5.4.1.3.8 Pump Overspeed Considerations

For turbine trips actuated by either the reactor trip system or the turbine protection system, the generator and reactor coolant pumps are maintained connected to the offsite network through the main transformer for 30 seconds to prevent any pump overspeed condition.

An electrical fault requiring immediate trip of the generator (with resulting turbine trip) could result in an overspeed condition. However, the turbine control system and the turbine intercept valves limit the overspeed to less than 120 percent. As additional backup, the turbine protection system has a mechanical overspeed protection trip, set at about 111 percent (of turbine speed). In case a generator trip de-energizes the pump buses, the reactor coolant pump motors will be transferred to offsite power within six to ten cycles. Further discussion of pump overspeed considerations is contained in Reference 5.4.1-1.

5.4.1.3.9 Anti-Reverse Rotation Device

Each of the reactor coolant pumps is provided with an anti-reverse rotation device in the motor. This anti-reverse mechanism consists of pawls mounted on the outside diameter of the flywheel, a serrated ratchet plate mounted on the motor frame, a spring return for the ratchet plate, and two shock absorbers.

At an approximate forward speed of 70 rpm, the pawls drop and bounce across the ratchet plate; as the motor continues to slow, the pawls drag across the ratchet plate. After the motor has slowed and come to a stop, the dropped pawls engage the ratchet plate and, as the motor tends to rotate in the opposite direction, the ratchet plate also rotates until it is stopped by the

shock absorbers. The rotor remains in this position until the motor is energized again. When the motor is started, the ratchet plate is returned to its original position by the spring return.

As the motor begins to rotate, the pawls drag over the ratchet plate. When the motor reaches sufficient speed, the pawls are bounced into an elevated position and are held in that position by friction resulting from centrifugal forces acting upon the pawls. While the motor is running at speed, there is no contact between the pawls and ratchet plate.

5.4.1.3.10 Shaft Seal Leakage

Leakage along the reactor coolant pump shaft is controlled by three shaft seals arranged in series such that reactor coolant leakage to the Containment is essentially zero. Seal injection flow is directed to each reactor coolant pump via a seal water injection filter. It enters the pumps through a connection on the main flange. Most of this seal injection water flows down through a cavity between the main flange and the thermal barrier and out through the heat exchanger into the Reactor Coolant System. The remaining injection water passes through the radial bearing and up through the seals. After passing through the number 1 seal, most of the flow leaves the pump via the number 1 seal leakoff line. Minor flow passes through the number 2 seal to its leakoff line. A back flush injection from a head tank flows into the number 3 seal between its "double dam" seal area. At this point the flow divides with half flushing through one side of the seal and out the number 2 seal leakoff while the remaining half flushes through the other side and out the number 3 seal leakoff. This arrangement assures essentially zero leakage of reactor coolant into the Containment.

5.4.1.3.11 Seal Discharge Piping

Water from each pump number 1 seal is piped to a common manifold, and through the seal water return filter and through the seal water heat exchanger where the temperature is reduced to that of the volume control tank. The number 2 and 3 leakoff lines route number 2 and 3 seal leakage to the reactor coolant drain tank and the containment sump, respectively.

5.4.1.3.12 Reactor Coolant Pump Operation Without Component Cooling Water

Should a loss of component cooling water to the RCPs occur, the Chemical and Volume Control System continues to provide seal injection flow to the RCPs; the seal injection flow is sufficient to prevent damage to the RCP seals with a loss of thermal barrier cooling. However, the loss of component cooling water to the motor bearing oil coolers will result in an increase in oil temperature and a corresponding rise in motor bearing temperature. It has been demonstrated by testing that the reactor coolant pumps will incur no damage as a result of a component cooling water flow interruption of 10 minutes.

Furthermore, Westinghouse contends that operation of the RCPs without component cooling water will not result in an instantaneous seizure of a single pump and that instantaneous seizure of multiple pumps simultaneously is not a credible ultimate consequence.

In the event of a loss of component cooling water to the RCPs, the operator would be alerted by the following alarms/indications as appropriate:

a) The CCWS flow alarm for each of the return lines from the RCPs is located on the main control board.

b) The CCWS isolation valve position indicators, which would indicate valve closure, are located on the main control board.

c) The CCWS temperature alarms for the outlet headers from the RCPs are located on the main control board.

d) The reactor coolant pump motor bearing temperature is supplied as an input to the process computer. A high temperature will cause the computer to alarm and identify the out-of-limit temperature.

Ten minutes is a conservative and appropriate operator response time for this event during normal operations.

5.4.1.3.13 Alternate Seal Injection (ASI) System

Upon loss of the minimum seal injection flow to the RCP seals, the Alternate Seal Injection system shall automatically actuate and provide seal injection cooling to the RCP seals. Additionally this system is not reliant on the plant electrical system and can provide its own power. Refer to Section 9.3.8 for more details on the ASI system.

5.4.1.4 Tests and Inspections

The reactor coolant pumps are inspected in accordance with the ASME Code, Section XI, for inservice inspection of nuclear reactor coolant systems.

The pump casing is cast in two pieces, and joined by electroslag welding. Support feet are cast integral with the casing to eliminate a weld region.

The design enables disassembly and removal of the pump internals for usual access to the internal surface of the pump casing.

The reactor coolant pump quality assurance program is given in Table 5.4.1-2.

5.4.1.5 Pump Flywheels

The integrity of the reactor coolant pump flywheel is assured on the basis of the following design and quality assurance procedures.

5.4.1.5.1 Design Basis

The calculated stresses at operating speed are based on stresses due to centrifugal forces. The stress resulting from the interference fit of the flywheel on the shaft is less than 2000 psi at zero speed, but this stress becomes zero at approximately 600 rpm because of radial expansion of the hub. The reactor coolant pumps run at approximately 1184 rpm and may operate briefly at overspeeds up to 111 percent during loss of outside load. For conservatism, however, 125 percent of operating speed was selected as the design speed for the reactor coolant pumps. The flywheels are given a preoperational test at 125 percent of the maximum synchronous speed of the motor.

5.4.1.5.2 Fabrication and Inspection

The flywheel consists of two thick plates bolted together. The flywheel material is produced by a process that minimizes flaws in the material and improves its fracture toughness properties, i.e., an electric furnace with vacuum degassing. Each plate is fabricated from SA-533, Grade B, Class 1 steel. Supplier certification reports are available for all plates and demonstrate the acceptability of the flywheel material on the basis of the requirements of Regulatory Guide 1.14.

Flywheel blanks are flame-cut from the SA-533, Grade B, Class 1 plates with at least 1/2 inch of stock left on the outer and bore radii for machining to final dimensions. The finished machined bores, keyways, and drilled holes are subjected to magnetic particle or liquid penetrant examinations in accordance with the requirements of Section III of the ASME Code. The finished flywheels, as well as the flywheel material (rolled plate), are subjected to 100 percent volumetric ultrasonic inspection using procedures and acceptance standards specified in Section III of the ASME Code.

The reactor coolant pump motors are designed such that, by removing the cover to provide access, the flywheel is available to allow an inservice inspection program in accordance with the recommendations of Regulatory Guide 1.14, referencing Section XI of the ASME Code. For a description of inservice inspection of the flywheels, refer to Section 5.2.4.

5.4.1.5.3 Material Acceptance Criteria

The reactor coolant pump motor flywheel conforms to the following material acceptance criteria:

a) The nil-ductility transition temperature (NDTT) of the flywheel material is obtained by two drop weight tests (DWT) which exhibit "no-break" performance at 20 F in accordance with ASTM E-208. The above drop weight tests demonstrate that the NDTT of the flywheel material is no higher than 10 F.

b) A minimum of three Charpy V-notch impact specimens from each plate shall be tested at ambient (70 F) temperature in accordance with the specification ASME SA-370. The Charpy V-notch (C_v) energy in both the parallel and normal orientation with respect to the rolling direction of the flywheel material is at least 50 foot pounds at 70 F and, therefore, an RT_{NDT} of 10 F can be assumed. An evaluation of flywheel overspeed has been performed which concludes that flywheel integrity will be maintained (Reference 5.4.1-1).

Thus, it is concluded that flywheel plate materials are suitable for use and meet Regulatory Guide 1.14 acceptance criteria on the basis of suppliers' certification data. The degree of compliance with Regulatory Guide 1.14 is further discussed in Section 1.8.

5.4.2 STEAM GENERATOR

The original Harris steam generators were Westinghouse Model D4s, a preheater type steam generator with Alloy 600 Mill Annealed tubes. These steam generators experienced tube degradation, degradation of tube support components, and other problems similar to industry-wide experience with this model. Performance, flexibility, and economics led Harris to replace the steam generators during RFO10 (Fall 2001). The replacement steam generators used were the Westinghouse Delta 75 model, which are the subject of the following FSAR passages.

5.4.2.1 Steam Generator Materials

5.4.2.1.1 Selection and fabrication of materials

All pressure boundary materials used in the steam generator were selected and fabricated in accordance with the requirements of Section III of the ASME Code. A general discussion of materials specifications is given in Section 5.2.3, with types of materials listed in Tables 5.2.3-1 and 5.2.3-2. Fabrication of reactor coolant pressure boundary materials is also discussed in Section 5.2.3, particularly in Sections 5.2.3.3 and 5.2.3.4.

Laboratory testing and industry experience justified the selection of thermally treated Alloy 690 tube material for the replacement steam generators. Alloy 690 had been under development since the early 1970s. Thermally treated Alloy 690 has been proven through both laboratory testing and operational experience to provide increased corrosion resistance compared to mill annealed Alloy 600, particularly with regard to primary water stress corrosion cracking. Additionally, as an added measure of resistance to corrosion, all small radius U-bends (less than 24" bend diameter, or the first 17 rows) receive an additional thermal treatment after bending thereby reducing residual stress in this region. Residual stresses in tubes with bend diameters greater than 24" have corresponding low residual stress levels after bending.

The Alloy 690 tubing specification is in accordance with the requirements of ASME Code Case N-20-3, ASME Code Section III, ASME Code Section II Specification SB-163 (UNS N06690), and used the following document in developing the tubing specification: the EPRI Guidelines for Procurement of Alloy 690 steam generator tubing (EPRI Report NP-6743-L, February, 1991).

The steam generator external pressure boundary, which includes the upper and lower shells, transition cone, the upper shell elliptical head, and the channel head, is constructed of a combination of forgings and plate sections. The cylindrical shell sections are constructed of SA533 Type B Class 2 rolled and formed plate sections. The channel head, steam dome elliptical head, and transition cone are single forged SA-508 Class 3a material.

The steam generator primary side channel head utilizes a single alloy steel forging with integrally forged primary nozzles, forged stainless steel nozzle safe ends, supports, and manways. The channel head interior and the tubesheet outboard of the tube holes is clad with an austenitic stainless steel cladding weld, using an automatic gas metal arc weld process. The tubesheet primary surface inboard from the tube holes is clad with Alloy 690. The tube ends are seal welded to the tube sheet cladding. The tubes are then hydraulically expanded to within 1/4" of the top of the tubesheet.

Code cases used in material selection are discussed in Section 5.2.1.

During manufacture, cleaning was performed on the primary side of the steam generator in accordance with written procedures which meet the requirements of Class B, Part 2.1 of ASME NQA-2-1986 Edition. Cleaning was performed on the secondary side of the steam generator in accordance with written procedures which meet the requirements of Class C, Part 2.1 of ASME NQA-2-1986 Edition. Onsite cleaning and cleanliness control was performed by CP&L to appropriate guides and standards.

The fracture toughness of the materials is discussed in Section 5.2.3.3. Adequate fracture toughness of ferritic materials in the steam generators is provided by compliance with Appendix

G of 10 CFR 50 and the Article NB-2300 of Section III of the ASME Code. As discussed in Section 5.4.2.3, consideration of fracture toughness is only necessary for materials in ASME Class 1 components.

5.4.2.1.2 Steam generator design effects on materials

Several features are employed to limit the regions where deposits would tend to accumulate and possibly cause corrosion. To avoid extensive crevice areas in the tube sheet, the tubes are hydraulically expanded to the full depth (within a 1/4" of the top) of the tube sheet. A flow distribution baffle plate is designed and located to produce a sweeping flow across the tubesheet. This flow distribution baffle design controls the cross-flow velocity so that the low velocity region (and sludge deposition zone) is located at the center of the tube bundle, near the blowdown intake. The tube holes in the flow distribution baffle plate are of the broach design with a nonafoil cutout design.

Nine tube support plates are spaced along the vertical length of the tubes. All tube support plates are made of type 405 ferritic stainless steel. The plates feature a flat contact broached trefoil tube hold design. The broached tube support plate is designed to reduce the tube to tube support plate crevice area while providing the maximum steam/water flow in the open areas adjacent to the tube. The flat tube contact geometry in these plates provides additional dryout margin.

5.4.2.1.3 Compatibility of steam generator tubing with primary and secondary coolants

The Alloy 690 tubing installed in the steam generators has been shown by test and operating experience to be exceptionally resistant to both primary water stress corrosion cracking (PWSCC), which initiates tube degradation in the expansion region within the tubesheet area, and outer diameter stress corrosion cracking (ODSCC), which has affected the secondary side of the tubes at the tube support plate intersections.

The steam generator tubes were full length (approximate) hydraulically expanded in the tubesheet. The tube/tubesheet expansion process results in reduced residual stress levels compared to previous methods of tube expansion. This reduced residual stress will lower the potential for PWSCC in this region.

The potential for ODSCC to develop in the Delta 75 steam generators is greatly reduced versus the previous D4 steam generators. The axial flow path around the steam generator tubes provided by the tube hole design does not permit contaminants to collect in the reduced crevice area. The tube support plate material does not represent a potential for magnetite generation or general corrosion product buildup.

Corrosion tests, which subjected the steam generator tubing material Alloy 690 to simulated steam generator water chemistry, indicated that the loss due to general corrosion over the life of the plant is insignificant compared to the tube wall thickness. Testing to investigate the susceptibility of heat exchanger construction materials to corrosion in caustic and chloride aqueous solutions indicated that Alloy 690 has excellent resistance to general and pitting type corrosion in severe operating water conditions.

The Harris plant chemistry organization adheres to EPRI Primary and Secondary Water Chemistry Guidelines, which have been developed to ensure the compatibility of primary and secondary coolants with steam generator tubing materials such as Alloy 690.

5.4.2.1.4 Cleanup of secondary side materials

Several methods are employed to clean operating steam generators of potentially detrimental secondary side deposits. A 2.5 inch tubesheet blowdown pipe is located on the top of the tubesheet in the tubelane. The blowdown pipe extends essentially the full length of the tubelane. The location of the blowdown piping suction, adjacent to the tube sheet and in a region of relatively low flow velocity, facilitates the efficient removal of particulates that accumulate near the tube sheet. Blowdown flow rates are managed to control the chemistry of the steam generator bulk water within the limits specified in the EPRI guidelines.

The steam generators incorporate a passive sludge collecting system. The sludge collector is located in the upper shell in the center of the unit on the upper surface of the primary moisture separator deck plate. The sludge collector removes suspended solids from the water flowing over the collector and, therefore, reduces the amount of sludge deposited on the tubesheet.

5.4.2.2 Steam Generator In-service Inspection

The steam generators are designed to permit in-service inspection of Class 1 and 2 components, including individual tubes, as described in Section 5.2.4. The design aspects that provide access for inspection and the proposed inspection program comply with 10 CFR 50.55a(g). A number of access openings make it possible to inspect and repair or replace a component according to the specified techniques. These openings include four manways: two of them for access to both hot and cold sides of the steam generator channel head, and two of them for inspection and maintenance of the steam dryers located in the steam drum. The steam generators have six 6 inch handholes: four located just above the tubesheet surface 90° apart and two located 180° apart on the blowdown lane just above the flow distribution baffle plate. These 6 inch handholes are located to maximize their utility for inspection and maintenance of the lower tube bundle. Two 4 inch inspection port openings are located on the lower shell-transition cone junction, just above the top tube support plate on the tubelane centerline. Sixteen 2 inch inspection openings are located 180° opposite each other, just above each of the tube support plates.

5.4.2.3 Design Bases

Steam generator design data are given in Table 5.4-2-1. Code classifications of the steam generator components are given in Section 3.2. Although the ASME classification for the secondary side is specified to be Class 2, the current philosophy is to design all pressure retaining parts of the steam generator, and thus both the primary and secondary pressure boundaries, to satisfy the criteria specified in Section III of the ASME Code for Class 1 components. The design stress limits, transient conditions, and combined loading conditions applicable to the steam generator are discussed in Section 3.9.1.

Estimates of radioactivity levels anticipated in the secondary side of the steam generators during normal operation, and the bases for the estimates are given in Section 11.1.1. The accident analysis of a steam generator tube rupture is discussed in Section 15.6.3.

The internal moisture separation equipment is designed to ensure that moisture carryover does not exceed 0.10 percent by weight at 100% power conditions.

The water chemistry on the reactor side is selected to provide for reactivity control and to minimize corrosion of reactor coolant system surfaces. The water chemistry of the steam side and its effectiveness in corrosion control are discussed in Section 10.3.5. Compatibility of steam generator tubing with both primary and secondary coolants is discussed further in Section 5.4.2.1.3.

The steam generator is designed to prevent unacceptable damage from mechanical or flow induced vibration. This is discussed in Section 5.4.2.5.3. The tubes and tube sheet are analyzed in WNEP-9719 and confirmed to withstand the maximum accident loading condition as it is defined in Section 3.9.1. Further consideration is given in Section 5.4.2.5.4 to the effect of tube wall thinning on accident condition stresses.

The steam generators are designed to operate with a full load circulation ratio greater than 3.0. Circulation ratio is defined as the ratio of bundle flow to steam flow. The high circulation ratio serves to improve steam generator water chemistry, reduce localized steam voids, and reduces the severity of transients.

5.4.2.4 Design Description

The feedring type steam generator shown in Figure 5.4.2-1 is a vertical shell and U type evaporator with integral moisture separating equipment.

On the primary side, the reactor coolant flows through the inverted U-tubes, entering and leaving through nozzles located in the hemispherical bottom head of the steam generator. The head is divided into inlet and outlet chambers by a vertical divider plate extending from the head to the tube sheet.

Steam is generated on the shell side, flows upward and exits through the outlet nozzle at the top of the vessel. During normal operation, feedwater is introduced into the steam generator via a main feedwater nozzle located in the upper shell. The nozzle contains an Alloy 690 thermal liner welded to the nozzle and the feedwater ring, which minimizes the impact of rapid feedwater temperature transients. The feedring is located above the elevation of the feed nozzle, to minimize the time required to fill the feed nozzle during a cold water addition transient. This is an important feature for reducing the thermal fatigue loading on the main feed nozzle and helps to eliminate the potential for the occurrence of water hammer. The feedring utilizes top discharge spray nozzles, spaced uniformly around the feedring, which distribute the feedwater into the upper shell recirculating water pool. The use of the welded thermal sleeve and top discharge spray tubes precludes drainage of the feedwater ring, which avoids creating areas where steam pockets can be formed. The feedring discharge system is designed to eliminate steam pockets from forming, which minimizes the chance of water hammer events.

The recirculating water (water separated from the steam and the water from the feedwater nozzle) travels downward from the steam dome in an annulus region formed between the steam generator shell and an internal wrapper plate. An open area at the bottom of the wrapper barrel permits the water to enter the tube bundle. The water flows upward through the tube bundle. A water/steam mixture flows into the steam drum section, where 18 primary centrifugal moisture separators remove most of the entrained water from the steam. The steam continues to the

secondary separators for further moisture removal, increasing its quality to a minimum of 99.90 percent. The moisture separators recirculate the separated water back to the recirculating water pool for another passage through the steam generator. Dry steam exits through the outlet nozzle. The stream outlet nozzle contains a steam flow restrictor, described in Section 5.4.4.

5.4.2.5 Design Evaluation

5.4.2.5.1 Forced convection

The effective heat transfer coefficient is determined by the physical characteristics of the Delta 75 steam generator and the fluid conditions in the primary and secondary systems for the "nominal" 100 percent design case. It includes a conservative allowance for fouling and uncertainty. Adequate heat transfer area is provided to ensure that the full design heat removal rate is achieved.

5.4.2.5.2 Natural circulation flow

The driving head created by the change in coolant density as it is heated in the core and rises to the outlet nozzle initiates convection circulation. This circulation is enhanced by the fact that the steam generators, which provide a heat sink, are at a higher elevation than the reactor core which is the heat source. Thus, natural circulation is assured for the removal of decay heat during hot shutdown in the unlikely event of loss of forced circulation. More details regarding natural circulation are provided in Section 5.4.7.2.8.

5.4.2.5.3 Mechanical and flow induced vibration under normal operating conditions

In the design of Westinghouse Delta 75 steam generators, the potential for tube wall degradation attributable to mechanical or flow induced excitation has been thoroughly evaluated in report WNEP-9719. The evaluation included detailed analyses of the tube support systems for various mechanisms of tube vibration.

The primary cause of tube vibration in heat exchangers is hydrodynamic excitation due to secondary fluid flow on the outside of the tubes. In the range of normal steam generator operating conditions, the effects of primary fluid flow inside the tubes and mechanically induced tube vibration are considered negligible.

Three potential tube vibration mechanisms due to hydrodynamic excitation by the secondary fluid on the outside of the tubes have been identified and were evaluated. These include potential flow-induced vibrations from vortex shedding, turbulence, and fluidelastic vibration mechanisms.

Non-uniform two-phase turbulent flow exists throughout most of the tube bundle. Therefore, vortex shedding is possible only for the outer few rows in the inlet regions. Moderate tube response caused by vortex shedding is observed in some carefully controlled laboratory tests on idealized tube arrays. However, no evidence of tube response caused by vortex shedding is observed in steam generator scale model test simulating the inlet region. Bounding calculations consistent with laboratory test parameters confirm that vibrations amplitudes would be acceptably small, even if the carefully controlled laboratory conditions were unexpectedly reproduced in the steam generator.

Flow-induced vibrations due to flow turbulence are also small: root mean square amplitudes are consistent with levels measured in operating steam generators with benign wear experience, and these vibrations cause peak stresses which are well below fatigue limits for the tubing material.

Fluidelastic tube vibrations are potentially more severe than either vortex shedding or turbulence because it is a self-excited mechanism: relatively large tube amplitudes can feedback proportionally large tube driving forces if an instability threshold is exceeded. Tube support spacing incorporated into the design of both the tube support plates and the anti-vibration bars in the U-bend region provides tube response frequencies such that the instability threshold is not exceeded for secondary fluid flow conditions for tubes which are effectively supported. This approach provides large margins against initiation of fluidelastic vibration for tubes which are effectively supported by the tube support system.

In summary, tube vibration has been thoroughly evaluated. Mechanical and primary flow excitation is considered negligible. Secondary flow excitation has been evaluated. From this evaluation, it is concluded that if tube vibration does occur, the magnitude will be limited. Tube fatigue due to the vibration is judged to be negligible. Any tube wear resulting from the tube vibration would be limited and would progress slowly. This allows use of a periodic tube in-service inspection program for detection and follow of any tube wear. This in-service inspection program, in conjunction with tube plugging criteria, provides for safe operation of the steam generators.

5.4.2.5.4 Allowable tube wall thinning under accident conditions

An evaluation was performed to determine the extent of tube wall thinning that can be tolerated under accident condition loadings. WCAP-15678, Rev.1 demonstrates that the tubes meet the 40% depth of indication limit specified by Section XI of the ASME code.

5.4.2.6 Tests and Inspection

Surface and volumetric examinations were performed in accordance with Section III of the ASME Code. The steam generator NDE program during fabrication is given in Table 5.4.2-2.

Hydrostatic tests were performed in accordance with Section III of the ASME Code during manufacture of the replacement steam generators.

In addition, the heat transfer tubes were subjected to a hydrostatic test pressure of 1.25 times the primary side design pressure, prior to installation into the replacement steam generator.

5.4.3 REACTOR COOLANT PIPING

5.4.3.1 Design Bases

The piping in the RCS is Safety Class 1, Safety Class 2, and non-nuclear safety as shown on Figures 5.1.2-1 and 5.1.2-2. This piping is designed and fabricated in accordance with ASME Code, Section III, Class 1, Class 2, and ANSI B 31.1 requirements as applicable. The RCS piping is designed and fabricated to accommodate the system pressures and temperatures attained under all expected modes of plant operation or anticipated system interactions.

Stresses are maintained within the limits of the ASME Code. Code requirements are provided in Section 5.2.1.

Materials of construction are specified to minimize corrosion/erosion and ensure compatibility with the operating environment. The RCS piping materials comply with the requirements of the ASME Code, Section II (Parts A and C). Material specifications and processing are discussed in Section 5.2.3.

The RCS piping is specified in the smallest sizes consistent with system requirements. This design philosophy results in the reactor inlet and outlet piping diameters given in Table 5.4.3-1. The line between the steam generator and the pump suction is larger to reduce pressure drop and improve flow conditions to the pump suction.

Stainless steel pipe conforms to ANSI B36.19 for sizes 1/2 inch through 12 inches and wall thickness Schedules 40S through 80S. Stainless steel pipe outside of the scope of ANSI B36.19 conforms to ANSI B36.10.

The minimum wall thicknesses of the loop pipe and fittings are not less than that calculated using the ASME Code, Section III, Class 1 (NB 3000).

All butt welds, branch connection nozzle welds, and boss welds are of a full penetration design. Flanges conform to ANSI B16.5. Socket weld fittings and socket joints conform to ANSI B16.11.

5.4.3.2 Design Description

Principal design data for the reactor coolant piping are given in Table 5.4.3 1.

The reactor coolant piping and fittings are austenitic stainless steel. The main loop piping is fabricated from forged pipe and cast fittings; the remaining RCS piping is fabricated from forged pipe and forged fittings. There is no electroslag welding on these components. All smaller piping which comprise part of the RCS such as the pressurizer surge line, spray lines, safety and relief valve piping, loop drains and connecting lines to other systems are also austenitic stainless steel. All joints and connections are welded, except for the pressurizer code safety valves, where flanged joints are used. Thermal sleeves are installed at the following points:

1. Pressurizer end of the pressurizer surge line, and

2. Pressurizer spray line connections to the pressurizer.

All piping connections from auxiliary systems are made above the horizontal centerline of the reactor coolant piping, with the exception of:

1. Residual heat removal pump suction lines, which are 45 degrees down from the horizontal centerline. This enables the water level in the RCS to be lowered in the reactor coolant pipe while continuing to operate the Residual Heat Removal System, should this be required for maintenance.

2. Loop drain lines and the connection for temporary level measurement of water in the RCS during refueling and maintenance operation.

3. The differential pressure taps for flow measurement, which are downstream of the steam generators on the first 90 degree elbow.

4. The pressurizer surge line, which is attached at the horizontal centerline.

5. The hot leg sample connections and the loop 3 thermowell, which are located on the horizontal centerline.

Penetrations into the coolant flow path are limited to the following:

1. The spray line inlet connections extend into the cold leg piping in the form of a scoop so that the velocity head of the reactor coolant loop flow adds to the spray driving force.

2. The reactor coolant sample system taps protrude into the main stream to obtain a representative sample of the reactor coolant.

3. The resistance temperature detector hot leg thermowells are located in scoops which extend into the reactor coolant piping.

4. The wide range and narrow range temperature detectors are located in resistance temperature detector wells that extend into both the hot and cold legs of the reactor coolant pipes.

On each reactor coolant loop hot and cold leg, there are resistance temperature detectors (in thermowells) so that individual temperature signals may be developed for use in the reactor control and protection system. The three hot leg thermowells are located in scoops which extend into the flow stream at locations 120° apart in the cross sectional plane of the piping. The scoops were originally used in a bypass manifold system, but have been modified to hold thermowells. Each thermowell contains a RTD. The signals from the three hot leg RTDs in a loop are averaged to generate a representative hot leg temperature. This compensates for temperature layers found in the hot leg.

Because of the mixing action of the reactor coolant pump, only one RTD (in a thermowell) is used for the cold leg to develop the representative temperature. Each cold leg RTD is located near the discharge of a reactor coolant pump.

Each RTD is a dual element RTD, but only one element is defined as active. The second element is a spare, but is not connected to any instrumentation in its instrument cabinet.

Signals from these instruments are used to compute the reactor coolant ΔT (temperature of the hot leg, T_{hot}, minus the temperature of the cold leg, T_{cold}) and an average reactor coolant temperature (T_{avg}). The T_{avg} for each loop is indicated on the main control board.

The RCS piping includes those sections of piping interconnecting the reactor vessel, steam generator, and reactor coolant pump. It also includes the following:

1. Charging line and alternate charging line from the system isolation valve up to the branch connections on the reactor coolant loop.

2. Letdown line and excess letdown line from the branch connections on the reactor coolant loop to the system isolation valve.

3. Pressurizer spray lines from the reactor coolant cold legs to the spray nozzle on the pressurizer vessel.

4. Residual heat removal lines to or from the reactor coolant loops up to the designated check valve or isolation valve.

5. Safety injection lines from the designated check valve to the reactor coolant loops.

6. Accumulator lines from the designated check valve to the reactor coolant loops.

7. Loop drain, sample, and instrument lines to the designated isolation valve. Lines with a 3/8 inch or less flow restricting orifice quality as Safety Class 2; in the event of a break in one of these Safety Class 2 lines, the reactor coolant makeup system is capable of providing makeup flow while maintaining pressurized water level as described in Section 6.3.3.2.

8. Pressurizer surge line from one reactor coolant loop hot leg to the pressurizer vessel surge nozzle.

9. Pressurizer spray scoop, sample connection with scoop, reactor coolant temperature element installation boss, and the temperature element well itself.

10. All branch connection nozzles attached to reactor coolant loops.

11. Pressure relief lines from nozzles on top of the pressurizer vessel up to and through the pressurizer power operated relief valves and pressurizer safety valves. Piping beyond the power operated relief and safety valves and associated with the pressurizer relief tank is discussed in Section 5.4.11.

12. Auxiliary spray line from the isolation valve to the pressurizer spray line header.

13. Sample lines from the pressurizer to the isolation valve. Lines with a 3/8 inch or less flow restricting orifice qualify as Safety Class 2; in the event of a break in one of these Safety Class 2 lines, the reactor coolant makeup system is capable of providing makeup flow while maintaining pressurizer water level as described in Section 6.3.3.2.

Details of the materials of construction and codes used in the fabrication of reactor coolant piping and fittings are discussed in Section 5.2.

5.4.3.3 Design Evaluation

Piping load and stress evaluation for normal operating loads, seismic loads, blowdown loads, and combined normal, blowdown and seismic loads is discussed in Section 3.9.

5.4.3.3.1 Material corrosion and erosion evaluation

The water chemistry is controlled to minimize corrosion. Periodic analysis of the coolant chemical composition is performed to verify that the reactor coolant quality meets the specifications.

Components constructed with stainless steel will operate satisfactorily under normal plant chemistry conditions in pressurized water reactor systems, because chlorides, fluorides, and particularly oxygen are controlled to very low levels (see Section 5.2.3).

Maintenance of the water quality to minimize corrosion is accomplished by using the chemical and volume control system and sampling system which are described in Chapter 9.0.

5.4.3.3.2 Sensitized stainless steel

Controls to minimize sensitization are discussed in Section 5.2.3.

5.4.3.3.3 Contaminant control

Contamination of stainless steel and inconel by copper, low melting temperature alloys, mercury and lead is prohibited.

Prior to initial application of thermal insulation, the austenitic stainless steel surfaces were cleaned and analyzed to a halogen limit of 0.0015 mg Cl/dm^2 and 0.0015m F/dm^2. During commercial operation, activities in the area of the piping are controlled to prevent contamination of the stainless steel surfaces. In the event that activities take place which are likely to contaminate the piping surface, swipe tests and cleaning, as needed, are then performed prior to installing the insulation.

5.4.3.4 Tests and Inspections

The RCS piping quality assurance program is given in Table 5.4.3-2.

Volumetric examination was performed during construction throughout 100 percent of the wall volume of each pipe and fitting in accordance with the applicable requirements of Section III of the ASME Code for all pipe 27-1/2 inches and larger. All unacceptable defects were repaired in accordance with the requirements of the same section of the code.

A liquid penetrant examination was performed during construction on both the entire outside and inside surfaces of each finished fitting in accordance with the criteria of the ASME Code, Section III. Acceptance standards were in accordance with the applicable requirements of the ASME Code, Section III.

The pressurizer surge line conforms to SA-376, Grade 304, 304N, or 316 with supplementary requirements S2 (transverse tension tests), and S6 (ultrasonic test). The S2 requirement applies to each length of pipe. The S6 requirement applies to 100 percent of the piping wall volume.

The RCS piping is designed to accommodate an inservice inspection program in accordance with the requirements of the ASME Code, Section XI.

Removable insulation is provided on all pressure retaining welds within the RCS boundary to allow access for examination.

5.4.4 MAIN STEAMLINE FLOW RESTRICTOR

5.4.4.1 Design Bases

The outlet nozzle of the steam generator contains a flow restrictor designed to limit steam flow in the unlikely event of a break in the main steamline. With a restrictor, a large increase in steam flow will create a back pressure which limits further increase in steam flow. Several protective advantages are thereby provided: rapid rise in containment pressure is prevented, the rate of heat removal from the reactor coolant is maintained within acceptable limits, thrust forces on the main steamline piping are reduced, stresses on internal steam generator components, particularly the tube sheet and tubes, are maintained within acceptable limits. Another design objective is to minimize waterhammer type loads and the unrecovered pressure loss across the restrictor during normal operation.

5.4.4.2 Design Description

The steam flow restrictor is formed from a single Inconel ASME-SB-564, Alloy UNS N06690, forging with 7 integral venturis. The venturis are configured with a single center venturi, with the remaining six venturis equally spaced around the center. The effective flow area of the venturis is approximately 1.4 ft^2. The restrictor is welded to the steam outlet nozzle (SA-508 Class 3a).

5.4.4.3 Design Evaluation

The flow restrictor design has been analyzed to determine its structural adequacy. The equivalent throat diameter of the steam generator outlet is 16 inches, and the resultant pressure drop through the restrictor at 100 percent steam flow is approximately 3.7 psi. This is based on a design flow rate of 4.36×10^6 lb/hr. Materials of construction and manufacturing of the flow restrictor are in accordance with Section III of the ASME Code.

5.4.4.4 Tests and Inspections

Since the restrictor is not a part of the steam system boundary, no tests and inspections beyond those conducted during fabrication are performed.

5.4.5 MAIN STEAM LINE ISOLATION SYSTEM

Each Main Steam Line downstream of the steam generators is provided with a Main Steam Isolation Valve (MSIV). The MSIVs are located outside the Containment Building as close to the containment wall as practical and downstream of the steam generator safety and relief valves. Section 5.4.9 describes in detail the main steam line layout and design considerations. Refer to Sections 10.3 and 7.3 for a description of the main steam isolation valves and main steam isolation signal (MSIS).

5.4.6 REACTOR CORE ISOLATION COOLING SYSTEM

This section is not applicable to the Shearon Harris Nuclear Power Plant.

5.4.7 RESIDUAL HEAT REMOVAL SYSTEM

The Residual Heat Removal System (RHRS) transfers heat from the RCS to the Component Cooling Water System to reduce the temperature of the reactor coolant to the cold shutdown temperature at a controlled rate during the second part of normal plant cooldown and maintains this temperature until the plant is started up again.

During the first phase of cooldown, the temperature of the RCS is reduced by transferring heat from the RCS to the steam and power conversion system through the steam generators.

Parts of the RHRS also serve as parts of the ECCS during the injection and recirculation phases of a LOCA (see Section 6.3).

The RHRS also is used to transfer refueling water between the refueling cavity and the refueling water storage tank at the beginning and end of the refueling operations.

Nuclear plants employing the same RHRS design as the SHNPP are given in Section 1.3.

5.4.7.1 Design Bases

RHRS design parameters are listed in Table 5.4.7-1.

The RHRS is placed in operation approximately four hours after reactor shutdown when indicated temperature and pressure of the RCS are less than approximately 350 F and 360 psig, respectively. Assuming that two RHR heat exchangers and two RHR pumps are in service. The RHRS is designed to reduce the temperature of the reactor coolant from 350 F to 140 F in approximately 25 hours. The time required, under these conditions, to reduce reactor coolant temperature from 350 F to 200 F is seven hours. The heat load handled by the RHRS during the cooldown transient includes residual and decay heat from the core and reactor coolant pump heat. The heat load used for the cooldown times is based on the decay heat fraction that exists following reactor shutdown from an extended run at full power.

Cooling of the RCS must be sustained via continued operation of the steam generator PORVs until the RHRS is capable of maintaining the RCS temperature at less than 350 F. Depending on the CCWS flow distribution that is assumed for the single train cooldown operation, the RHRS cut-in time must be delayed to approximately 16 hours after reactor shutdown to prevent heat-up when all cooling is transferred to the RHRS. Assuming that only one RHR heat exchanger and one RHR pump are in service, the RHRS is capable of reducing the temperature of the reactor coolant from 350 F to 200 F in approximately 51 hours.

The CCW System is designed to supply water at a maximum temperature of 125°F to the components being cooled when the RHR system is in operation. During normal plant operation (not at cooldown via RHR) the CCW temperature is approximately 105 F. This would be the CCW temperature when the RHR system is initiated. At this point RCS temperature is 350 F. As the cooldown proceeds, the CCW temperature will rise to a maximum approaching 125 F. The cooldown was analyzed assuming CCW was maintained less than or equal to 125 F. CCW temperature will drop off again as RCS cooldown is achieved. The time required to cooldown the RCS depends upon the number of RHR trains in service. (It takes longer with one train than with two trains). It will also depend on whether the RCS is cooling down to cold shutdown or to

the significantly lower refueling temperature. In any case it is assumed that CCW temperature is at 105 F at RHR initiation, and that as the cooldown proceeds the CCW temperature rises.

The RHRS is designed to be isolated from the RCS whenever the RCS pressure exceeds the RHRS design pressure. The RHRS is isolated from the RCS on the suction side by two motor operated valves in series on each suction line. Each motor operated valve is interlocked to prevent its opening if RCS indicated pressure is greater than or equal to 363 psig and to alarm if RCS pressure is high with the valve not fully closed. The RHRS is isolated from the RCS on the discharge side by three check valves and one normally open motor operated gate valve in the return lines to the RCS cold legs and by two check valves and one normally closed motor operated gate valve in the return lines to the RCS hot legs (See Section 6.3). (These check valves and motor operated valves are not considered part of the RHRS.)

Each inlet line to the RHRS is equipped with a pressure relief valve designed to relieve the flow of a charging pump at the relief valve set pressure plus accumulation. These relief valves also protect the system from inadvertent overpressurization during plant cooldown or startup. Each discharge line from the RHRS to the RCS is equipped with a pressure relief valve designed to relieve the backleakage through the valves isolating the RHRS from the RCS.

The RHRS is designed to be fully operable from the Control Room for normal operation. Manual operations required of the operator are: opening the suction isolation valve, positioning the flow control valves downstream of the RHRS heat exchangers, and starting the RHR pumps. Additional local manual operations may be performed when placing the RHRS in the shutdown cooling mode of operation. Local operations such as alignment of the RHRS to the Sampling System or alignment to the CVCS Normal Letdown are desired operational practices, but are not required by design. By nature of its redundant two train design, the RHRS is designed to accept all major component single failures with the only effect being an extension in the required cooldown time. For two low probability electrical system single failures, i.e., failure in the suction isolation valve interlock circuitry, or diesel generator failure in conjunction with loss of offsite power, limited operator action outside the Control Room is required to open the suction isolation valves. Manual actions are discussed in further detail in Sections 5.4.7.2.6 and 5.4.7.2.7. The RHRS motor operated isolation valves located inside Containment are not susceptible to flooding following a steamline break or a loss of coolant accident.

Missile protection, protection against dynamic effects associated with the postulated rupture of piping, and seismic design are discussed in Sections 3.5, 3.6, and 3.7, respectively.

Only one train of the RHR system need be in operation at any one time. The train which is not in service can be tested.

5.4.7.2 System Design

5.4.7.2.1 Schematic piping and instrumentation diagrams

The RHRS, as shown in Figures 5.4.7-1 and 5.4.7-2, consists of two RHR heat exchangers, two RHR pumps, and the associated piping, valves, and instrumentation necessary for operational control. The inlet lines to the RHRS are connected to the hot legs of two reactor coolant loops, while the return lines are connected to each of the cold legs and to two hot legs of the reactor coolant loops. These return lines are also the ECCS low head cold leg injection/recirculation lines and the hot leg recirculation lines.

During RHRS operation, reactor coolant flows from the RCS to the RHR pumps, through the tube side of the RHR heat exchangers, and back to the RCS. The heat is transferred to the component cooling water circulating through the shell side of the RHR heat exchangers.

Coincident with operation of the RHRS, a portion of the reactor coolant flow may be diverted from downstream of the RHR heat exchangers to the Chemical and Volume Control System (CVCS) low pressure letdown line for cleanup and/or pressure control. By regulating the diverted flow rate and the charging flow, the RCS pressure may be controlled. Pressure regulation is necessary to maintain the pressure range dictated by the fracture prevention criteria requirements of the reactor vessel and by the number 1 seal differential pressure and net positive suction head requirements of the reactor coolant pumps.

The RCS cooldown rate is manually controlled by regulating the reactor coolant flow through the tube side of the RHR heat exchangers. The flow control valve in the bypass line around each RHR heat exchanger automatically maintains a constant return flow to the RCS. Instrumentation is provided to monitor system pressure, temperature, and total flow.

The RHRS can also be used for filling the refueling cavity before refueling. After refueling operations, water is pumped back to the refueling water storage tank until the water level is brought down to the flange of the reactor vessel. The water in the reactor vessel is lowered by a combination of the method described above and a chemical and volume control system evolution that is referred to as low pressure letdown. The remainder of the water in the refueling cavity is removed via a drain connection at the bottom of the refueling cavity.

During partial drain evolution of the RCS, adequate reactor coolant system inventory, level control, and RHR Net Positive Suction Head (NPSH) are maintained by restricting operating limits. If it is required that the water level be lowered to drain the steam generator tubes, the residual heat removal flow rate is throttled to a range of approximately 1200 to 2500 gpm (actual upper limit established by calculation) through the applicable residual heat removal train. Procedurally, operation is restricted to one RHR train operating and one train in the standby mode. Draining of the RCS is permitted to the point where the indicated level is stable and at an elevation that is above what is defined as the "Critical Analyzed Caviation Level." Inventory makeup, if required, can be accomplished via the chemical and volume control system (CVCS) charging and safety injection pump (CSIP) or utilizing a gravity feed from the refueling water storage tank (RWST) through the low head safety injection/residual heat removal system.

Should a RHR system inlet line become uncovered, air may be drawn into the suction piping and entrained in the fluid. Factors which minimize the effects of air entrainment on pump performance are as follows:

1. The location of the residual heat removal pumps provides positive head on the pump inlet, and

2. The circulation flow rate is kept low and unnecessary circulation of fluid is avoided (i.e., the minimum flow required for core decay heat removal is maintained).

Provisions have been made to minimize the effects of air entrainment; however, should such an event preclude the continued use of the operating train, actions will be taken to permit the utilization of the alternate train by providing sufficient refill/makeup from the CVCS/charging pumps.

Provisions are incorporated to ensure the rapid restoration of the RHR system to service in the event that the RHR pumps become air bound. Flow and pressure indications downstream of the pump would provide indication that flow had decreased. On identifying this situation, the affected train would be isolated and heat removal accomplished by the redundant train.

Procedures address the provision of alternate sources of cooling should loss of RHR cooling occur during shutdown maintenance evolutions. These provisions will consider maintenance evolutions during which more than one cooling system may be unavailable, such as loss of steam generators when the reactor coolant system has been partially drained for steam generator inspection or maintenance.

The RHR suction lines have a provision for relief from the effects of the RCS hot legs on the water trapped between the normally closed RHR suction lines isolation valves.

When the RHRS is in operation, the water chemistry is the same as that of the reactor coolant. Provision is made for the process sampling system to extract samples from the flow of reactor coolant downstream of the RHR heat exchangers. A local sampling point is also provided on each residual heat removal train between the pump and heat exchanger.

The RHRS functions in conjunction with the high head portion of the ECCS to provide direct injection of borated water from the refueling water storage tank into the RCS cold legs during the injection phase following a LOCA. During normal operation, the RHRS is aligned to inject borated water upon receipt of a safety injection signal.

In its capacity as the low head portion of the ECCS, the RHRS also provides long term recirculation capability for core cooling following the injection phase of a LOCA. This function is accomplished by aligning the RHRS to take fluid from the containment sump, cool it by circulation through the RHR heat exchangers, and supply it to the core directly as well as via the centrifugal charging pumps.

The use of the RHRS as part of the ECCS is more completely described in Section 6.3.

The RHR pumps, in order to perform their ECCS function, are interlocked to start automatically on receipt of a safety injection signal (see Section 6.3).

The RHR suction isolation valves in each inlet line from the RCS are separately interlocked to prevent being opened when RCS indicated pressure is greater than approximately 363 psig and to alarm if RCS pressure is high with the valve not fully closed. These interlocks are described in more detail in Sections 5.4.7.2.4, 7.6.1, and 7.6.2.

The RHR suction relief valve setpoint is 450 psig. The actual open permissive setpoint includes allowances for the elevation difference between the RCS wide range pressure transmitters and the components of the RHR loops, instrument inaccuracies and relief valve setpoint accuracy.

The RHR suction isolation valves are also interlocked to prevent their being opened unless the isolation valves in the following lines are closed:

1. Recirculation lines from the RHR heat exchanger outlets to the suction of the centrifugal charging pumps.

2. RHR pump suction line from the refueling water storage tank.

The motor operated valves in the residual heat removal miniflow bypass lines are interlocked to open when the RHR pump discharge flow is less than 746 gpm (at 350°F) and close when the flow exceeds 1402 gpm (at 350°F).

5.4.7.2.2 Equipment and component descriptions

The materials used to fabricate RHRS components are in accordance with the applicable code requirements. Parts of components in contact with borated water are fabricated or clad with austenitic stainless steel or equivalent corrosion resistant material. Component parameters are given in Table 5.4.7-2.

Residual Heat Removal Pumps - Two pumps are installed in the RHRS. The pumps are sized to deliver reactor coolant flow through the RHR heat exchangers to meet the plant cooldown requirements. The use of two separate residual heat removal trains assures that cooling capacity is only partially lost should one RHR pump become inoperative.

The RHR pumps are protected from overheating and loss of suction flow by miniflow bypass lines. A valve located in each miniflow line is regulated by a signal from the flow transmitters located in each pump discharge header. The motor-operated valve in each miniflow line is interlocked to provide automatic operation. The three position control at the main control board prevents inadvertent operator mispositioning. This Open-Auto-Close position control has a spring return to Auto from both the Open and Close position. The control valves open when the RHR pump discharge flow is less than 746 gpm (at 350 F) and close when the flow exceeds 1402 gpm (at 350 F).

A pressure sensor in each pump discharge header provides a signal for an indicator in the Control Room. A high pressure alarm is also actuated by the pressure sensor.

The two pumps are vertical, centrifugal units with mechanical seals on the shafts. Pump surfaces in contact with reactor coolant are austenitic stainless steel or equivalent corrosion resistant material.

The RHR pumps also function as the low head safety injection pumps in the ECCS (see Section 6.3 for further information and for the residual heat removal pump performance curves).

<u>Residual Heat Exchangers</u>

Two RHR heat exchangers are installed in the system. The heat exchanger design is based on heat load and temperature differences between reactor coolant and component cooling water existing 25 hours after reactor shutdown when the temperature difference between the two systems is small.

The installation of two heat exchangers in separate and independent residual heat removal trains assures that the heat removal capacity of the system is only partially lost if one train becomes inoperative.

The RHR heat exchangers are of the shell and U-tube type. Reactor coolant circulates through the tubes, while component cooling water circulates through the shell. The tubes are welded to the tube sheet to prevent leakage of reactor coolant.

The RHR heat exchangers also function as part of the ECCS (see Section 6.3).

Residual Heat Removal System Valves

Valves that perform a modulating function are equipped with two sets of packings and an intermediate leakoff connection that discharges to the drain header.

Manual and motor operated valves have backseats to facilitate repacking and to limit stem leakage when the valves are open. Leakage connections are provided where required by valve size and fluid conditions.

5.4.7.2.3 System operation

Reactor Startup - Generally, while at cold shutdown condition, decay heat from the reactor core is being removed by the RHRS. The number of pumps and heat exchangers in service depends upon the heat load at the time.

At initiation of plant startup, the RCS is completely filled, and the pressurizer heaters are energized. The RHRS is operating and is connected to the CVCS via the low pressure letdown line for purification and/or to control reactor coolant pressure. During this time, the RHRS acts as an alternate letdown path. The manual valves downstream of the RHR heat exchangers leading to the letdown line of the CVCS are opened. The control valve in the line from the RHRS to the letdown line of the CVCS is then manually adjusted in the Control Room to permit letdown flow.

After the reactor coolant pumps are started, pressure control via the RHRS and the low pressure letdown line is continued until the pressurizer steam bubble is formed. Indication of steam bubble formation is provided in the Control Room by the damping out of the RCS pressure fluctuations, and by pressurizer level indication. The RHRS can then be isolated from the RCS and the system pressure controlled by normal letdown and the pressurizer spray and pressurizer heaters.

Power Generation and Hot Standby Operation - During power generation and hot standby operation, the RHRS is not in service but is aligned for operation as part of the ECCS.

Reactor Cooldown - Reactor cooldown is defined as the operation which brings the reactor from no load temperature and pressure to cold conditions.

The initial phase of reactor cooldown is accomplished by transferring heat from the RCS to the steam and power conversion system through the use of the steam generators.

When the reactor coolant temperature and pressure are reduced to approximately 350°F and 360 psig, the second phase of cooldown starts with the RHRS being placed in operation.

Startup of the RHRS includes a warmup period during which time reactor coolant flow through the heat exchangers is limited to minimize thermal shock. The rate of heat removal from the

reactor coolant is manually controlled by regulating the coolant flow through the residual heat exchangers. By adjusting the control valves downstream of the RHR heat exchangers the mixed mean temperature of the return flow is controlled. Coincident with the manual adjustment, each heat exchanger bypass valve is automatically regulated to give the required total flow.

The reactor cooldown rate is limited by RCS equipment cooling rates based on allowable stress limits, as well as the operating temperature limits of the component cooling water system.

As cooldown continues, the pressurizer is filled with water and the RCS is operated in the water solid condition.

At this stage, pressure control is accomplished by regulating the charging flow rate and the rate of letdown from the RHRS to the CVCS.

After the reactor coolant pressure is reduced and the temperature is 140°F or lower, the RCS may be opened for refueling or maintenance.

Refueling - The reactor head is lifted. Either RHR pump may be utilized during refueling to pump borated water from the refueling water storage tank to the refueling cavity. During this operation, the respective RHR loop isolation valves in the suction line from the RCS are closed, and the isolation valve from the refueling water storage tank is opened. The refueling water is then pumped into the reactor vessel through the RHRS returned lines (hot or cold legs) and into the refueling cavity through the open reactor vessel.

During refueling, the RHRS is maintained in service with the number of pumps and heat exchangers in operation as required by the heat load.

Following refueling, the RHRS is used to drain the refueling cavity to a level above the top of the reactor flange by pumping water from the RCS to the refueling water storage tank. After the vessel head is replaced, the normal shutdown cooling RHRS flowpath is re-established.

5.4.7.2.4 Control

Each inlet line to the RHRS is equipped with a pressure relief valve. Each relief valve, 8708 A & B, is sized to pass the full flow of a charging pump operating against a Reactor Coolant System pressure of 495 psig. Each relief valve has a capacity of 900 gpm. Technical specifications (3/4.5.3) require that at temperatures below 325°F (RHR separation range) only one charging pump be operable. These relief valves also protect the RHRS from inadvertent overpressurization during plant cooldown or startup. The open permissive setpoint includes allowances for the elevation difference between the transmitters and the components of the RHR loops, instrument inaccuracies and relief valve setpoint accuracy. An analysis has been conducted to confirm the capability of the RHRS relief valve to prevent overpressurization in the RHRS. All credible events were examined for their potential to overpressurize the RHRS. These events included normal operating conditions, infrequent transients, and abnormal occurrences. The analysis confirmed that one relief valve has the capability to maintain the RHRS maximum pressure within code limits.

Each discharge line from the RHRS to the RCS is equipped with a pressure relief valve to relieve any backleakage through the valves separating the RHRS from the RCS. Technical

specifications place maximum limits on RCS leakage. Furthermore, the technical specifications require the plant to be shutdown within specified time periods if these values are exceeded. The RHR discharge relief valves are sized to relieve 20-gpm at a set pressure of 600 psig; therefore, even if it were conservatively assumed that all RCS leakage was in one RHR train, the relief valve still provides significant margin. Sufficient capacity in RHR relief valves is available to also relieve thermal expansion. These relief valves are located in the ECCS.

The residual heat removal system (RHRS) is designed with overpressure provisions to prevent RHRs pressure from exceeding 110 percent of design assuming the most severe credible overpressure transient at low temperature. The most severe credible overpressure transient is the mass input transient resulting from one centrifugal charging pump operating in an unthrottled condition with flow to the reactor coolant system while letdown flow is isolated. The capacity of a single RHRS inlet relief valve is sufficient to satisfy RHRS overpressure requirements for this transient as well as an inadvertant Safety Injection with a single centrifugal charging pump during the hot shutdown and cold shutdown operational modes. Procedures and administrative controls ensure that more severe RHRS overpressure transients do not occur during RHRS operation.

Refer also to Section 7.6 for protection features provided by the RHRS inlet isolation valves and accumulator discharge isolation valves.

The fluid discharged by the suction side relief valves is collected in the pressurizer relief tank. The fluid discharged by the discharge side relief valves is collected in the recycle holdup tank of the Boron Recycle System.

Operator response to an open RHR relief valve would be to isolate the affected RHR train. Depending on system parameters, various indications would aid the operator. The leak could be inferred from changes to PRT level, pressure, and temperature. These would be provided by pressure indication 472, level indication 470, and temperature indication 471.

A decrease in pressurizer level would also be observed with low level being alarmed. Decrease in RHR pressure and flow may be noted via pressure indications 601 A/B, 600 A/B, and flow indication 602 A/B.

Specific procedures diagnose a lifted relief valve and isolate the affected train.

The design of the RHRS includes two motor operated gate isolation valves in series on each inlet line between the high pressure RCS and the lower pressure RHRS. They are closed during normal operation and are only opened for residual heat removal during a plant cooldown after the RCS pressure is reduced to approximately 360 psig or lower and RCS temperature is reduced to approximately 350°F. During a plant startup, the RHR inlet isolation valves are closed by the operator prior to increasing RCS pressure above approximately 400 psig. Should the operator fail to do this, an alarm will sound at approximately 425 psig and the RHR suction relief valves would open at approximately 450 psig inlet pressure. These isolation valves are provided with independent and diverse "prevent-open" interlocks which are designed to prevent possible exposure of the RHRS to normal RCS operating pressure. The inlet isolation valves in each subsystem are separately and independently interlocked with pressure signals to prevent their being opened whenever the RCS pressure is greater than approximately 363 psig. The two inlet isolation valves in each subsystem also provide an alarm when the valve is not shut and the RCS pressure becomes high during a plant startup.

The use of two independently powered motor operated valves in each of the two inlet lines, along with two independent and diverse "prevent open" pressure interlock signals assures a design which meets applicable single failure criteria. Not only more than one single failure but also different failure mechanisms must be postulated to defeat the function of preventing possible exposure of the RHRS to normal RCS operating pressure. These protective interlock designs, in combination with plant operating procedures, provide the means for accomplishing the protective function. For further information on the instrumentation and control features, see Section 7.6.2.

The RHR inlet isolation valves are provided with red-green position indicator lights on the main control board and have their power supplies taken upstream of the valve operator power. This provides position indication even when power is removed from the valve operator.

5.4.7.2.5 Applicable codes and classifications

The entire RHRS is designed as Safety Class 2 with the exception of the suction isolation valves which are Safety Class 1. Component codes and classifications are given in Section 3.2.

5.4.7.2.6 System reliability considerations

General Design Criterion 34 requires that a system to remove residual heat be provided. The safety function of this required system is to transfer fission product decay heat and other residual heat from the core at a rate sufficient to prevent fuel or pressure boundary design limits from being exceeded. Safety grade systems are provided in the plant design, both Nuclear Steam Supply System (NSSS) scope and balance-of-plant (BOP) scope, to perform this function. The NSSS scope safety grade systems which perform this function for all plant conditions except LOCA are the RCS, steam generators and the RHRS. The BOP scope safety grade systems which perform this function for all plant conditions except a LOCA are the Auxiliary Feedwater System; the steam generator safety and power operated relief valves, the Component Cooling Water System, and the Service Water System. The RCS and steam generators operate in conjunction with the Auxiliary Feedwater System and the steam generator safety and power operated relief valves. The RHRS operates in conjunction with the Component Cooling Water and Service Water Systems.

For LOCA conditions, the safety grade system which performs the function of removing residual heat from the reactor core is the ECCS, which operates in conjunction with the Component Cooling Water System and the Service Water System.

The Auxiliary Feedwater System, along with the steam generator safety and power operated relief valves, provides a completely separate, independent, and diverse means of performing the safety function of removing residual heat, which is normally performed by the RHRS when RCS temperature is less than 350 F. The Auxiliary Feedwater System is capable of performing this function for an extended period of time following plant shutdown.

The RHRS is provided with two RHR pumps and RHR heat exchangers arranged in two separate, independent flow paths. To assure reliability, each RHR pump is connected to a different vital bus. Each train is isolated from the RCS on the suction side by two motor operated valves in series with each valve receiving power via a separate motor control center and from a different vital bus. Each suction isolation valve is also interlocked to prevent exposure of the RHRS to the normal operating pressure of the RCS (see Section 5.4.7.2.4).

RHRS operation for major system failures is accomplished from the Control Room. The redundancy in the RHRS design provides the system with the capability to maintain its cooling function even with major single failures, such as failure of a RHR pump, valve, or heat exchanger, without impact on the redundant train's continued heat removal.

Although such major system failures are within the system design basis, there are other failures which can prevent opening of the residual heat removal suction isolation valves from the Control Room. Since these failures are unlikely to occur, and can be corrected outside the Control Room, with ample time to do so, they have been realistically excluded from the engineering design basis. Such failures are not likely to occur during the limited time period in which they can have any effect (i.e., when opening the suction isolation valves to initiate residual heat removal operation); however, even if they should occur, they have no adverse safety impact and can be readily corrected. In such a situation, the Auxiliary Feedwater System and steam generator power operated relief valves can be used to perform the safety function of removing residual heat and in fact can be used to continue the plant cooldown below 350 F, until the RHRS is made available.

One failure of this type is a failure in the interlock circuitry which is designed to prevent exposure of the RHRS to the normal operating pressure of the RCS (see Section 5.4.7.2.4). In the event of such a failure, RHRS operation can be initiated by defeating the failed interlock through corrective action at the solid state protection system cabinet or at the individual affected motor control centers.

The other type of failure which can prevent opening the residual heat removal suction isolation valves from the Control Room is a failure of an electrical power train. In the event of electrical power Train "A" failure, an RHR flow path can be maintained during long term post LOCA cooling by use of provisions which enable Train "A" RHR suction valve to be transferred from its normal power supply (Class 1E 480 volt Train "A") to an alternate Class 1E power supply (Class 1E 480 volt Train "B"). Similar provisions exist on Train "B" RHR suction isolation valve. Refer to Section 8.3.1.1.2.4 for a discussion of temporary power supply arrangements.

Each RHR loop is isolated from the reactor coolant system by two redundant motor operated valves. One valve in each loop is located inside the missile barrier and is powered from Train B. The redundant valve is located outside the missile barrier and is powered from Train A. This ensures that isolation can be maintained between the RHR and the RCS in the event of a single failure of the power supply.

Two valve operators for RHR shutdown cooling suction valves inside the biological shield wall of containment have an alternate power supply. Operator with safety train "A" (SA) normal supply has an (SB) alternate supply and vice versa. The position indicator lights for these valves also have an alternate power supply. Switching the power supplies requires that the independence of (SA) and (SB) be maintained at all times and the terminations be made according to control wiring diagrams (CWDs) for the alternate power supplies. Electricians and Instrumentation & Control Technicians are trained in the proper use of the control wiring diagrams. SHNPP estimates that the work can be completed and the circuits tested in a maximum time span of four hours.

There is an interlock relay associated with each valve which is located in the solid state protection cabinets. These cabinets are located near the main control room. The CWDs, for the valve operator power supplies identify both the solid state protection cabinet and the

interlock relay terminal numbers within the cabinet. The relays may be defeated by either removing the appropriate leads or by installing a jumper. With the CWDs available, the job could be completed in minutes.

To ensure operation of at least one 100 percent RHR train in the event of loss of a single power supply, a temporary power connection is provided to the MCC compartment of the RHR valve inside the biological shield wall of containment whose power supply has failed. This temporary power connection is a cable from a designated compartment of the unaffected redundant MCC to a divided remote terminal box which serves the affected valve. The power supply arrangement is illustrated on FSAR Figure 8.3.1-5. The MCCs involved are MCC 1A21-SA and 1B21-SB. For the locations of the MCCs, refer to FSAR Figure 1.2.2-31 (at Section line A-A) and to Figure 1.2.2-39 (Elevation 286.00 ft.). Terminals are provided in the MCC compartments to facilitate a temporary connection to the indication and control circuits. Refer also to FSAR Section 8.3.1.1.2.4.

Other single electrical failures associated with the RHR pumps and valves would only cause the loss of a single train of shutdown cooling.

If a failure occurs, which results in the isolation of both RHR shutdown cooling loops, then operator action would be required to manually open the suction valves. In each loop, one of these suction valves is in the Reactor Coolant Loop/Steam Generator compartment accessed from the 261 ft. elevation of Containment and the other is outside the missile barrier in Containment. These valves do have manual operators.

Valve position indication is provided on the main control board for both the open and closed positions for the RHR suction line isolation valves and RHR recirculation valves. On loss of suction, the RHR system would go into a recirculation mode, thus protecting the operating RHR pump. Indication of reduced flow and pump amperage is also provided in the control room for the operator to observe during normal system surveillance.

The only impact of either of the above types of failures is some delay in initiating residual heat removal operation, while action is taken to open the residual heat removal suction isolation valves. This delay has no adverse safety impact because of the capability of the Auxiliary Feedwater System and steam generator power operated relief valves to continue to remove residual heat, and in fact to continue plant cooldown. The auxiliary feedwater system and the steam generator power-operated relief valves can be used to perform the safety function of removing residual heat for a 12-hour period using a Seismic Category I water supply.

Presently available analytical techniques and experimental data indicate that the probability of a catastrophic rupture of a "nuclear grade" pipe is practically nil. "Code-allowable" defects are not expected to grow appreciably during the life of the plant because: crack growth rates have been shown to be low at the anticipated operational stress levels; quality control is strict during the various states of manufacturing, shipping and installation; system design and operation is such that stresses are within acceptable limits; and, in-service inspections are conducted periodically. It is, therefore, concluded that a catastrophic rupture of a RHR/ECCS pipe is not the most credible failure mode since a significant amount of effort is put into preventing these ruptures and in assuring that original pipe quality is maintained during the entire life of the plant. However, if a "code-allowable" defect grows through wall, it will yield a fluid leakage that will be detected by one or more of the currently available leak detection systems well before the crack

reaches the critical length and the pipe ruptures. For further discussion on design techniques, leakage detection and recovery procedures, refer to FSAR Sections 3.6 and 6.3.2.5.

When the RHRS is used as the LPI subsystem of the ECCS, the most credible passive failure is postulated in the flow path from the containment sump to the low head injection header via the residual heat removal pumps and residual heat exchangers. The LPI subsystem is almost entirely located in the Auxiliary Building.

All leaks in the LPIS are directed to the floor drains and channeled toward the sumps located at the lowest level in the Auxiliary Building. Operators will have diverse indications of a leak. By interpretation of process parameters and alarms the operators will determine the area where the leakage has occurred. Further information may be obtained by visual observation.

During the long-term cooling period following a loss of coolant, the ECCS flow path is separated into two trains, either of which can provide minimum core cooling functions. Either of the two trains can be isolated and removed from service in the event of a leak. Should one of these trains be isolated in this long term period, the other train remains operable.

ECCS performance degradation is not of prime concern following a passive failure event. An event resulting in maximum credible leakage would have an insignificant impact on ECCS capability since the redundant train is capable of assuming full cooling responsibility and maximum leakage represents less than 1.0 percent of system volumetric flow rate. The operator can, however, locate and isolate the leak within four hours.

Leak detection devices are provided for each pump compartment with indicating lights located in the main control room. The indicating lights would alert the operator of any excessive leakage. Separate and independent leak detection devices and indicating lights for each pump compartment would permit the operator to immediately identify which LPI train must be shutdown and secured to terminate the leak. The operator can readily accomplish this action from the control room by stopping the appropriate train pump and by closing the corresponding sump isolation valve and individual pump discharge valves. Design criteria of a maximum leakage of 50 gpm to be detected and isolated within four hours is, therefore, readily met.

Component Cooling Water (CCW) is supplied to RHR pump seal coolers under all modes of plant operation.

During startup, cooldown, and cold shutdown, two CCW pumps are normally used to supply all CCW requirements for the plant, including two RHR pump seal coolers. During these times, the CCW System is train aligned with RHR. One train of CCW also supplies non-essential loads. Failure of one of the CCW pumps or a single incorrect valve closure or a single moderate energy line crack would cause a loss of that train's cooling capability. Means of identifying a loss of CCW to the RHR pumps are identified in Section 9.2.2.5. The other train of RHR would continue to be supplied with CCW, and cooldown would be accomplished using the single RHR train. Loss of any part of one train can be tolerated.

During safeguards operation the CCW system is train aligned. At this time one CCW pump supplies one safeguards train, including one RHR pump. The other CCW pump supplies the other safeguards train including the other RHR pump. Loss of any part of one safeguards train can be tolerated.

During blackout conditions CCW pumps are automatically loaded onto the emergency diesel generator within 30 seconds of blackout.

A failure mode and effects analysis of the RHRS is provided as Table 5.4.7-3.

5.4.7.2.7 Manual actions

The RHRS is designed to be fully operable from the control room for normal operation. Manual operations required of the operator are: opening the suction isolation valves, positioning the flow control valves downstream of the RHR heat exchangers, and starting the RHR pumps. Additional local manual operations may be performed when placing the RHRS in the shutdown cooling mode of operation. Local operations such as alignment of the RHRS to the Sampling System or alignment to the CVCS Normal Letdown are desired operational practices, but are not required by design.

Manual actions required outside the Control Room, under conditions of single failure, are discussed in Section 5.4.7.2.6.

Manual actions which are required in case of natural circulation cooldown are described in Section 5.4.7.2.8.

5.4.7.2.8 Compliance with reactor systems branch BTP 5-1

The SHNPP's cold shutdown methodology per the requirements of SRP 5.4.7 (RSB BTP 5 1) is as follows:

1. Achieving Cold Shutdown - The plant has been evaluated to demonstrate actions needed to achieve cold shutdown conditions following a safe shutdown earthquake, loss-of-offsite power, and the most limiting single failure. To achieve and maintain cold shutdown, the following key functions must be performed: 1) residual heat removal, 2) boration and inventory control, and 3) depressurization.

    a. Residual Heat Removal - The function of residual heat removal is performed in two stages to accomplish the cooldown to cold shutdown.

    The first stage is cooldown from operating temperature to 350°F. During this stage, circulation of the reactor coolant is provided by natural circulation with the reactor core as the heat source and the steam generators as the heat sink. Steam is initially released via the Main Steam relief and safety valves. This occurs automatically as a result of turbine and reactor trip. Steam release for cooldown occurs via the Main Steam power-operated atmospheric relief valves. As the cooldown proceeds, the operator adjusts the amount of steam dump to permit a reasonable cooldown rate. Feedwater makeup may be provided by the auxiliary feedwater system during loss of power or accident conditions.

In the case of natural circulation, the response on the secondary will be like that described above.

The Main Steam power operated relief valves (PORV's) are Safety Class 2, seismic Category I and qualified for a harsh environment. CP&L has reviewed the arrangement and has

determined the most limiting single failure to be the loss of a division of electrical power which renders the components of that division inoperable. However, even with such a failure, two Steam Generators are available for cooldown of the plant to the conditions needed to allow initiation of the Residual Heat Removal System (RHRS) (i.e., approximately 350°F and 360 psig).

For more information on the Main Steam System see FSAR Section 10.3.

The Auxiliary Feedwater System (AFS) is Safety Class 2 or Class 3, seismic Category I and seismically and environmentally qualified. The AFS is comprised of two separate subsystems with sufficient alignment capability and flow capacity to ensure that sufficient water can always be provided to any combination of the three steam generators. The first subsystem is comprised of two motor-driven pumps; one is controlled and powered from the Emergency A Bus and the other is controlled and powered from the Emergency B Bus. The second system is comprised of a turbine-driven pump controlled from the Emergency DC B Bus and is powered by steam supplied from Steam Generators B and/or C. Any one of the three AFW pumps can supply sufficient flow for cooldown of the plant. For more information on the AFS see Section 10.4.9.

The second stage is from 350°F to cold shutdown. During this stage, the RHRS is brought into operation. Circulation of the reactor coolant is provided by the RHR pumps, and the heat exchangers in the RHRS act as the means of heat removal from the Reactor Coolant System (RCS). In the RHR heat exchangers, the residual heat is transferred to the Component Cooling Water System (CCWS) which then transfers the heat to the Service Water System (SWS) with final heat rejection to the Ultimate Heat Sink (UHS).

The RHRS, CCWS, and the SWS are safety grade, seismic Category I with redundant trains powered from the Emergency A Bus and the Emergency B Bus. Further information on these systems can be found in FSAR Sections 5.4.7 (RHRS), 9.2.1 (SWS), 9.2.2 (CCWS), and 9.2.5 (UHS).

b. Boration and Inventory Control - Boration is accomplished using portions of the Chemical and Volume Control System (CVCS). The boric acid transfer pumps supply four weight percent boric acid from the boric acid tank to the suction of the centrifugal charging pumps which inject the borated water into the RCS via the normal charging and/or reactor coolant pump seal injection flow paths. Makeup in excess of that required for boration can be provided from the Refueling Water Storage Tank (RWST) using the centrifugal charging pumps and the same injection flow paths as described for boration. Two motor-operated valves, one powered from Emergency A Bus, the other from Emergency B Bus and connected in parallel, transfer the suction of the charging pumps to the RWST. In the case of natural circulation, the operator response to control RCS boron concentration will differ from a normal reactor trip. This difference is primarily due to the unavailability of the normal or excess letdown capability. As a result, other means must be available to adjust the RCS boron concentration and control pressurizer level. When conditions are met, the reactor head vent system may be used as letdown as necessary. This may be helpful as a means to letdown when the pressurizer level approaches 85-90%.

Although boration to maintain subcriticality is not an immediate concern following a reactor trip, boration will be required during plant cooldown to cold shutdown conditions to compensate for positive reactivity insertion due to cooldown and to eventually compensate for xenon decay.

Similar to the normal shutdown, the boric acid transfer pumps will provide boric acid to the suction of the charging pumps. (One hour or greater is the time assumed for any local valve operation that may be required by the operator to establish one of the redundant flowpaths.)

Since any makeup to the RCS will result in a net increase in inventory, the operator will have to minimize RCS makeup yet ensure adequate boron addition and RCP seal cooling. This is accomplished by maintaining RCP seal injection via the RWST and then the BAT and isolating the normal charging path in a timely manner (if the flow control valve fails open on loss of air). For additional boration and to compensate for shrinkage during the cooldown, charging flow can be controlled at a later time by local operation of the manual bypass valve (8403). (Local action to control bypass charging is not assumed until after more than one hour.)

The CVCS is Safety Class 2 and 3, seismic Category I and seismically and environmentally qualified. For additional information refer to FSAR Section 9.3.4.

c. Depressurization - Depressurization is normally accomplished using portions of the CVCS. Either four weight percent boric acid or refueling water can be used as desired for depressurization with the flow path being from the centrifugal charging pumps to the auxiliary spray valve to the pressurizer if control and instrument air is available.

As an alternative, depressurization could be accomplished by discharging RCS inventory from the pressurizer to containment via the pressurizer power-operated relief valves. This operation can be integrated with the cooldown function near the end of the cooldown to 350°F. These valves have a limited safety grade pneumatic supply and may only be used for continued depressurization cycles if instrument air or nitrogen is available. In addition, the pressurizer vent system is also capable of relieving RCS pressure as needed. These means of depressurizing are available as backups to the auxiliary spray for providing this safety function during normal, emergency, and natural circulation cooldown.

The reactor head vent will also be available to provide this safety function during such operations as a natural circulation cooldown.

Limiting the RCS cooldown rate to 50°F/hr or less will allow the upper head region to cool at a rate approximately the same as the rest of the RCS. Therefore, during the depressurization process, the bulk upper head region will remain subcooled. Although no significant thermal stratification is expected to occur, operation of the reactor head vent system can be considered to enhance additional mixing and eliminate any potential for thermal stratification in the upper head region.

As RCS inventory is relieved to the containment, the pressurizer temperature and pressure is reduced, thus reducing the pressure in the RCS. Makeup is provided as necessary to maintain a minimum level in the pressurizer.

2. Single Failure Evaluation

a. Residual Heat Removal

(1) From Hot Standby to 350°F

Reactor coolant loops and steam generator - Three reactor coolant loops and steam generators are provided, any one of which can provide natural circulation flow for adequate core cooling. Even with the most limiting single failure, two of the reactor coolant loops and steam generators remain available.

Main Steam PORV's - Three valves are provided (one per generator). Any two SG PORVs will be sufficient to cooldown the RCS to allow the RHR System to be placed in service. To cool an inactive steam generator, an operator can either locally control the PORV for that generator or open the main steam isolation bypass valves (MSIBVs) between an active and inactive steam generator(s). Opening the MSIBVs allows the inactive SG to cool down using the PORV on the active generator(s). The MSIBVs are safety-related valves. Although the flow path for the steam in this situation is via downstream main steam piping and header (which are non-safety), this piping and the header are passive components which have been seismically analyzed. Therefore, it is unlikely any of this piping will crack open. If any such leakage were to occur, this could serve as a benefit by allowing a shorter cooldown time. This leakage would not have an adverse impact by allowing an uncontrolled secondary depressurization since the vent path though an open MSIBV restricts flow to a rate significantly less than that of one SG PORV.

Auxiliary feedwater pumps - Three (two motor-driven and one steam-driven) auxiliary feedwater pumps are provided. Each pump can provide sufficient cooling water to any combination of steam generators.

Auxiliary feedwater flow control valves - Electro-hydraulicfail open valves are provided. In the event of a single failure of one flow control valve (which affects flow to one steam generator from either a motor-driven pump or the steam-driven pump), auxiliary feedwater can still be provided to any combination of steam generators from the other pumps.

Condensate storage tank - Upon depletion of the primary source of auxiliary feedwater in the seismic Category I condensate storage tank, a backup source of auxiliary feedwater is the UHS via either train of the SWS.

(2) From 350°F to Cold Shutdown

RHR Pumps 1 and 2 - Two RHR pumps are provided, either one of which can provide adequate circulation of the reactor coolant. In the event of a single failure, either pump can provide sufficient RHR flow.

RHR Suction Isolation Valves 8701A and 8702A (to RHR Pump 1) and 8701B and 8702B (to RHR Pump 2) - The two valves in each RHR subsystem are each powered from different emergency busses (8701A and 8701B from A bus; and 8702A and 8702B from B bus). Failure of either emergency bus can prevent initiation of RHR cooling in the normal manner from the control room. In the

event of such a failure, the affected valve(s) can be deenergized and opened with its handwheel or can be opened using alternate power via operator action outside of the control room. Therefore, any single failure can be tolerated since it would only affect one of the two redundant RHR subsystems.

RHR Heat Exchangers 1 and 2 - If either heat exchanger is unavailable for any reason, the remaining heat exchanger can provide sufficient heat removal capability.

RHR Flow Control Valves HCV-603A and HCV-603B - If either of these normally open, fail-open valves closes spuriously, sufficient RHR cooling can be provided by the unaffected RHR subsystem.

RHR/Safety Injection System Cold Leg Isolation Valves 8888A and 8888B -If either of these normally open, motor-operated valves (each is powered from a different emergency bus) closes spuriously, sufficient RHR cooling can be provided by the unaffected RHR subsystem.

Component Cooling Water System - Two redundant subsystems are provided for safety-related loads. Either subsystem can provide sufficient heat removal via one of the RHR heat exchangers.

Service Water System - Two redundant subsystems are provided for safety related loads. Either subsystem can provide sufficient heat removal via one of the component cooling water system heat exchangers.

b. Boration and Inventory Control

Boric Acid Tank - One boric acid tank is provided. The tank contains sufficient four weight percent boric acid to borate the RCS for cold shutdown.

Boric Acid Transfer Pumps 1 and 2 - Each pump is powered from a different emergency bus. In the event of a single failure, either pump can provide sufficient boric acid flow.

Isolation Valve 8104 - If valve 8104 (located between the boric acid transfer pump discharge and the CVCS centrifugal charging pump suction), which is supplied from the Emergency B Bus and is normally closed, cannot be opened due to bus or operator failure, it can be opened locally with its handwheel. If valve 8104 cannot be opened with its handwheel, an alternate flow path is available via air-operated, fail open valve FCV-113 and normally closed manual valve 8439.

Refueling Water Storage Tank Isolation Valves LCV-115SA and LCV 115SB - Each valve is powered from a different emergency bus; only one of these normally closed motor-operated valves needs to be opened to provide a makeup flow path from the RWST to the CVCS centrifugal charging pumps.

Centrifugal Charging Pumps A, B, and C - Pump A is powered from the Emergency A Bus, pump B is powered from the Emergency B Bus, and pump C can be powered from either emergency bus (see FSAR Section 8.3.1.1.2.4). In the event of a single failure, any one pump can provide sufficient boration or makeup flow.

Flow Control Valve FCV-122 - This valve (located on the CVCS centrifugal charging pump discharge) is normally open and fails open on loss of air. If FCV-122 closes spuriously, the CVCS centrifugal charging pumps can safely operate on their miniflow circuits. Efforts would be made to open it or the manual bypass valve (8403). Boration can be accomplished by realigning the CVCS centrifugal charging pumps discharge in order to use the boron injection or SIS high-head injection in flow path.

Normal Charging Isolation Valves 8107 and 8108 - If either of these normally open, motor-operated valves, each of which is powered from a different emergency bus, closes spuriously, operator action can be used to deenergize the valve operator and reopen the valve with its handwheel. Boration can be accomplished by realigning the CVCS centrifugal charging pumps discharge in order to use the SIS high-head injection flow path. For the case of natural circulation, the normal charging path can be isolated using either 8107 or 8108 (if it is assumed the flow control valve FCV-122 fails open on loss of air). RCP seal injection will still be maintained with normal charging isolated in this manner. For additional boration and to compensate for shrinkage during the cooldown, charging flow can be controlled at a later time by local operation of the manual bypass valve (8403). The bypass valve would be used if the operator is not able to regain control of FCV-122.

Normal Charging Valve 8146 - If this normally open, fail-open valve closes spuriously, alternate charging valve 8147, which fails open, can be used. Boration can be accomplished by realigning the CVCS centrifugal charging pumps discharge in order to use the boron injection tank on the SIS high-head injection flow path.

c. Depressurization

Pressurizer Auxiliary Spray Valve 8145 - This normally closed valve fails closed on loss of air. If 8145 is stuck closed as a result of a single failure or due to loss of air, one of three pressurizer power-operated relief valves (two of which are safety grade) can be used to depressurize the RCS by discharging the pressurizer inventory to the pressurizer relief tank. These valves have a limited safety grade pneumatic supply and may only be used for continued depressurization cycles if instrument air or nitrogen is available.

Pressurizer Vent and Reactor Vessel Head Vent Valves - If the pressurizer power-operated relief valves are not available, the pressurizer vent and the upper head vent can be used to accomplish RCS depressurization. There are two safety grade valves of each type with isolation capability in the event of failure. The pressurization vent is the preferred option of the two, since a vapor path is a more effective depressurization method. The reactor vessel head vent is also effective if level is relatively high in the pressurizer (e.g., greater than 80% of span).

Charging Valves 8146 and 8147 - These valves fail open on loss of air. In this case, isolation is provided by two check valves in series with 8347 and 8378 or 8346 and 8379 respectively.

For RHR Suction Valves 8701A, 8701B, 8702A and 8702B, see Section 5.4.7.2.8.b)1)(b).

5.4.7.3 Performance Evaluation

The performance of the RHRS in reducing reactor coolant temperature is evaluated through the use of heat balance calculations on the RCS, and the Component Cooling Water System at stepwise intervals following the initiation of residual heat removal operation. Heat removal through the RHR and component cooling water heat exchangers is calculated at each interval by use of standard water-to-water heat exchanger performance correlations; the resultant fluid temperatures for the RHRS and Component Cooling Water System are calculated and used as input to the next interval's heat balance calculation.

Assumptions utilized in the series of heat balance calculations describing plant residual heat removal cooldown are as follows:

1. Residual heat removal operation is initiated 4 hours after reactor shutdown, for normal cooldown (Figure 5.4.7-3), and at up to 16 hours for some single-train alignments.

2. Residual heat removal operation begins at a reactor coolant temperature of 350 F.

3. Thermal equilibrium is maintained throughout the RCS during the cooldown.

4. Component cooling water supply temperature during cooldown is limited to a maximum of 125°F.

5. Expected cooldown rates of 50 F per hour are not exceeded.

Cooldown curves calculated using this method are provided for the case of all residual heat removal components operable (Figure 5.4.7-3) and for the case of a single train residual heat removal cooldown and loss of offsite power. (Figure 5.4.7-4).

The maximum cooldown rate which can result if both RHR flow control valves and both RHR bypass valves all simultaneously fail in such a manner as to permit maximum flow through the RHR heat exchangers (a low probability event considering the few hours a year when it could cause any effect) depends on several factors including the RHR flow rate, the component cooling water system flow rates and temperatures, and other heat loads on the component cooling water system. One of the key factors is the RCS temperature, since the heat removal rate depends on the temperature differential between the RHR (RCS) flow and the component cooling water flow in the RHR heat exchanger. Typically, it is impossible to maintain a cooldown rate even as high as the design rate of 50 F/hr when the RCS temperature is less than 250 F, even with the maximum flow through the RHR heat exchangers.

Even if maximum flow through the RHR heat exchangers was experienced at the instant of initiating RHR operation and no operator action was taken, it is unlikely that the cooldown would exceed 100 F in the first hour. The cooldown rate in the subsequent hours would be much less than 100 F/hr. The maximum possible cooldown rate from 350 F to 250 F would not exceed 200 F/hr. Calculations have been done which show that, from a stress standpoint, a cooldown rate greater than 200 F/hr is acceptable for such a hypothetical cooldown from 350 F to 250 F even though, as discussed above, the actual maximum rate of cooldown at or below 250 F is not expected to exceed 50 F/hr.

Although such a hypothetical cooldown even is acceptable assuming no operator action, it should be noted that the operator can significantly limit the maximum possible cooldown rate by merely stopping one of the RHR pumps.

5.4.7. PREOPERATIONAL TESTING

Preoperational testing of the RHRS is addressed in Chapter 14.0.

5.4.8 REACTOR WATER CLEANUP SYSTEM

This section is not applicable to the Shearon Harris Nuclear Power Plant.

5.4.9 MAIN STEAM AND FEEDWATER PIPING

The main steam and feedwater supply piping is designed to satisfy the criteria discussed in Sections 10.3.1 and 10.4.7, respectively. Additional special design requirements for the main steam lines are as follows:

a) Optimum pressure drop between the steam generators and the turbine,

b) Even distribution of load between each steam generator and turbine stop valve,

c) Adequate piping flexibility to achieve acceptable forces and moments at the anchor points and plant components, and low stress levels within the piping, and

d) Adequate draining capability for startup and for operation with high quality steam.

A complete description and evaluation of the Main Steam System, including design criteria and operation of the main steam safety valves and main steam isolation valves, is contained in Section 10.3. A complete description and evaluation of the Feedwater System is contained in Section 10.4.7.

Main steam piping between the steam generators and the isolation valves is designed to the requirements of the ASME Boiler and Pressure Vessel Code, Section III, and are classified as Safety Class 2, up to and including the isolation valves on each line. Steam piping from the isolation valves to the turbine is designed in accordance with ANSI B31.1.

All main feedwater system piping, up to but not including the check valves upstream of the main feedwater isolation valves outside the Containment, is designed in accordance with the ANSI B31.1 Power Piping Code requirements. Those portions of the main feedwater system piping from and including the above check valves outside the Containment to the steam generator feedwater nozzles are Seismic Category I and designed to ASME Section III, Class 2.

Main steam and feedwater piping from the steam generators past the isolation valves to the end of the rupture restraint system are classified as Seismic Category I. Seismic Category I piping beyond the isolation valves, which is non nuclear safety, meets the quality assurance requirements of Safety Class 3 piping. Pipe rupture and rupture restraint criteria for these systems is discussed in Section 3.6.2.

An adequately sized Steam Dump System is provided to dispose of steam to the atmosphere and to the condenser in the case of a full load rejection. A complete discussion of this system and its design parameters is contained in Section 10.4.4.

A complete description of main steam and feedwater system materials is contained in Section 10.3.6.

The in-service inspection program for ASME Section XI Class 2 and 3 piping systems is discussed in Section 6.6.

For inspection and test requirements for the Main Steam System and Feedwater System, see Sections 10.3.4 and 10.4.7, respectively.

5.4.10 PRESSURIZER

5.4.10.1 Design Bases

The general configuration of the pressurizer is shown in Figure 5.4.10-1. The design data of the pressurizer are given in Table 5.4.10-1. Codes and material requirements are provided in Section 5.2.

The pressurizer provides a point in the RCS where liquid and vapor can be maintained in equilibrium under saturated conditions for pressure and control purposes for steady state operations and during transients.

5.4.10.1.1 Pressurizer surge line

The surge line is sized to minimize the pressure drop between the RCS and the pressurizer safety valves with maximum allowable discharge flow from the safety valves.

The surge line and thermal sleeve are designed to withstand the thermal stresses resulting from volume surges of relatively hotter or colder water which may occur during operation.

The pressurizer surge line nozzle diameter is given in Table 5.4.10-1 and the pressurizer surge line diameter is shown in Figure 5.1.2-2.

5.4.10.1.2 Pressurizer

The volume of the pressurizer is equal to, or greater than, the minimum volume of steam, water, or the total of the two which satisfies all of the following requirements:

a) The combined saturated water volume and steam expansion volume is sufficient to provide the desired pressure response to system volume changes,

b) The water volume is sufficient to prevent the heaters from being uncovered during a step load increase of 10 percent at full power,

c) The steam volume is large enough to accommodate the surge resulting from a step load reduction of full load with automatic reactor control and 81 percent steam dump without the water level reaching the high level reactor trip point,

d) The steam volume is large enough to prevent water relief through the safety valves following a loss of load with reactor trip and without reactor control or steam dump,

e) The pressurizer will not empty following reactor trip and turbine trip, and

f) The emergency core cooling signal is not activated during reactor trip and turbine trip.

5.4.10.2 Design Description

5.4.10.2.1 Pressurizer Surge Line

The pressurizer surge line connects the pressurizer to one reactor hot leg, thereby enabling continuous coolant volume pressure adjustments between the RCS and the pressurizer.

5.4.10.2.2 Pressurizer

The pressurizer is a vertical, cylindrical vessel with hemispherical top and bottom heads constructed of carbon steel, with austenitic stainless steel cladding on all internal surfaces exposed to the reactor coolant. A stainless steel liner is used in lieu of cladding in some nozzles.

The surge line nozzle and removable electric heaters are located in the bottom of the pressurizer. The heaters are removable for maintenance or replacement.

A thermal sleeve is provided to minimize thermal stresses in the surge line nozzle. A retaining screen is located above the nozzle to prevent any foreign matter from entering the RCS. Baffles in the lower section of the pressurizer prevent an insurge of cold water from flowing directly to the steam/water interface and also assist in mixing.

Spray line nozzles and relief and safety valve connections are located in the top head of the pressurizer vessel. Spray flow is modulated by automatically controlled air operated valves. The spray valves also can be operated manually by a switch in the Control Room.

A small continuous spray flow is provided through a manual bypass valve around the power operated spray valves to assure that the pressurizer liquid is homogeneous with the coolant and to prevent excessive cooling of the spray piping.

During an outsurge from the pressurizer, flashing of water to steam and generating of steam by automatic actuation of the heaters keep the pressure above the minimum allowable limit. During an insurge from the RCS, the spray system, which is fed from two cold legs, condenses steam in the vessel to prevent the pressurizer pressure from reaching the setpoint of the power operated relief valves for normal design transients. Heaters are energized on high water level during insurge to heat the subcooled surge water that enters the pressurizer from the reactor coolant loop.

Material specifications are provided in Table 5.2.3-1 for the pressurizer, the spray line, and the surge line and Section 5.2.3.1 for cladded pressurizer parts. Design transients for the components of the RCS are discussed in Section 3.9.1. Additional details on the pressurizer design cycle analysis are given in Section 5.4.10.3.5. Radiation shielding considerations for the pressurizer are discussed in Section 12.3.

Pressurizer Instrumentation

Refer to Chapter 7.0 for details of the instrumentation associated with the pressurizer pressure, level, and temperature.

Spray Line Temperatures - Temperatures in the spray lines from the cold legs of two loops are measured and indicated in the Control Room. Alarms from these signals are actuated to warn the operator of low spray water temperature or indicate insufficient flow in the spray lines.

Safety and Relief Valve Discharge Temperatures - Temperatures in the pressurizer safety and relief valve discharge lines are measured and indicated in the Control Room. An increase in a discharge line temperature is an indication of leakage or relief through the associated valve.

5.4.10.3 Design Evaluation

5.4.10.3.1 System pressure

Whenever a steam bubble is present within the pressurizer, the RCS pressure will be maintained by the pressurizer. Analyses indicate that proper control of pressure is maintained for the normal operating conditions.

A safety limit of 110 percent RCS design pressure has been set to ensure that pressure does not exceed the maximum transient value allowed under the ASME Code, Section III, and thereby assure continued integrity of the RCS components.

Evaluation of plant conditions of operation, which follow, indicate that this safety limit is not reached.

During startup and shutdown, the rate of temperature change in the RCS is controlled by the operator. Heatup rate is controlled by pump energy and by the pressurizer electrical heating capacity. This heatup rate takes into account the continuous spray flow provided to the pressurizer.

When the pressurizer is filled with water, i.e., during initial system heatup, and near the end of the second phase of plant cooldown, RCS pressure is maintained by the letdown flow rate via the RHRS.

The pressurizer heater groups (proportional and backup) are capable of raising the pressurizer water temperature about 1°F/min. The temperature increase caused by the heaters is localized to the pressurizer. The pressurizer water volume is less than 10 percent of the total RCS volume. If the heat from the pressurizer heaters was distributed throughout the reactor coolant system, an overall system temperature rise of about .1°F/min. could be achieved. Therefore, pressurizer heaters would have a negligible effect on the RCS temperature transient.

In maintaining saturated conditions in the pressurizer, the 1°F/min. rise in pressurizer water temperature corresponds to about a 20 psi/min rise in saturation pressure. The pressurizer heaters principal effect on transients would be to maintain higher RCS pressures.

5.4.10.3.2 Pressurizer performance

The normal (full power) operating water volume is 60 percent of indicated level span at an RCS average temperature of 588.8°F. Under part load conditions, the water volume in the vessel is reduced for proportional reductions in plant load to accommodate the accompanying thermal contraction of the reactor coolant. The various plant operating transients are analyzed and the design pressure is not exceeded with the pressurizer design parameters as given in Table 5.4.10-1.

5.4.10.3.3 Pressure setpoints

The RCS design and operating pressure together with the safety, power relief and pressurizer spray valves setpoints, and the protection system pressure setpoints are listed in Table 5.4.10-2. The design pressure allows for operating transient pressure changes. The selected design margin considers core thermal lag, coolant transport time and pressure drops, instrumentation and control response characteristics, and system relief valve characteristics.

5.4.10.3.4 Pressurizer spray

Two separate, automatically controlled spray valves with remote manual overrides are used to initiate pressurizer spray. In parallel with each spray valve is a manual throttle valve which permits a small continuous flow through both spray lines to reduce thermal stresses and thermal shock when the spray valves open, and to help maintain uniform water chemistry and temperature in the pressurizer. Temperature sensors with low alarms are provided in each spray line to alert the operator to insufficient bypass flow. The layout o the common spray line piping routed to the pressurizer forms a water seal which prevents the steam buildup back to the control valves. The spray rate is selected to prevent the pressurizer pressure from reaching the operating setpoint of the power relief valves during a step reduction in power level of 10 percent of full load.

The pressurizer spray lines and valves are large enough to provide adequate spray using as the driving force the differential pressure between the surge line connection in the hot leg and the spray line connection in the cold leg. The spray line inlet connections extend into the cold leg piping in the form of a scoop in order to utilize the velocity head of the reactor coolant loop flow to add to the spray driving force. The spray valves and spray line connections are arranged so that the spray will operate when one reactor coolant pump is not operating. The line may also be used to assist in equalizing the boron concentration between the reactor coolant loops and the pressurizer.

A flow path from the CVCS to the pressurizer spray line is also provided. This additional facility provides auxiliary spray to the vapor space of the pressurizer during cooldown when the reactor coolant pumps are not operating. The thermal sleeves on the pressurizer spray connection and the spray piping are designed to withstand the thermal stresses resulting from the introduction of cold spray water.

5.4.10.3.5 Pressurizer design analysis

The occurrences for pressurizer design cycle analysis are defined as follows:

a) The temperature in the pressurizer vessel is always, for design purposes, assumed equal to the saturation temperature for the existing RCS pressure, except in the pressurizer steam space subsequent to a pressure increase. In this case the temperature of the steam space will exceed the saturation temperature since an isentropic compression of the steam is assumed.

   An exception to the above occurs when the pressurizer is filled water solid during plant startup and cooldown.

b) The temperature shock on the spray nozzle is assumed to equal the temperature of the nozzle minus the cold leg temperature and the temperature shock on the surge nozzle is assumed to equal the pressurizer water space temperature minus the hot leg temperature.

c) Pressurizer spray is assumed to be initiated instantaneously to its design value as soon as the RCS pressure increases 40 psi above the nominal operating pressure. Spray is assumed to be terminated as soon as the RCS pressure falls below the operating pressure plus 40 psi, unless otherwise noted.

d) Unless otherwise noted, pressurizer spray is assumed to be initiated once per occurrence of each transient condition. The pressurizer surge nozzle is also assumed to be subjected to one temperature transient per transient condition, unless otherwise noted.

e) At the end of each transient, except for the faulted conditions, the RCS is assumed to return to a load condition consistent with the plant heat up transient.

f) Temperature changes occurring as a result of pressurizer spray are assumed to be instantaneous. Temperature changes occurring on the surge nozzle are also assumed to be instantaneous.

g) Whenever spray is initiated in the pressurizer, the pressurizer water level is assumed to be at the no-load level.

5.4.10.4 Tests and Inspections

The pressurizer is designed and constructed in accordance with the ASME Code, Section III.

To implement the requirements of the ASME Code, Section XI, the following welds are designed and constructed to present a smooth transition surface between the parent metal and the weld metal. The path is ground smooth for ultrasonic inspection.

a) Support skirt to the pressurizer lower head.

b) Surge nozzle to the lower head.

c) Nozzles to the safety, relief, and spray lines.

d) Nozzle to safe end attachment welds with overlay.

e) All girth and longitudinal full penetration welds.

f) Manway attachment welds.

The liner within the safe end nozzle region extends beyond the weld region to maintain a uniform geometry for ultrasonic inspection.

Peripheral support rings are furnished for the removable insulation modules.

The pressurizer quality assurance program is given in Table 5.4.10-3.

5.4.11 PRESSURIZER RELIEF DISCHARGE SYSTEM

The Pressurizer Relief Discharge System collects, cools and directs for processing the steam and water discharged from the various safety and relief valves in the Containment. The system consists of the pressurizer relief tank (PRT), the safety and relief valve discharge piping, the tank internal spray header and associated piping, the tank nitrogen supply, the vent to Containment and the drain to the Waste Processing System.

5.4.11.1 Design Bases

Codes and materials of the PRT and associated piping are given in Section 5.2. Design data for the tank are given in Table 5.4.11-1.

The system design is based on the requirement to absorb a discharge of steam equivalent to 110 percent of the pressurizer steam volume at an RCS average temperature of 588.8°F. The steam volume requirement is approximately that which would be experienced if the plant were to suffer a complete loss of load accompanied by a turbine trip but without the resulting reactor trip. A delayed reactor trip is considered in the design of the system.

The volume of water in the PRT is capable of absorbing the heat from the assumed discharge, assuming an initial temperature of 120°F and increasing to a final temperature of 200°F. Provision is made to permit cooling if the temperature in the PRT rises above 120°F during plant operation.

The vessel saddle supports and anchor bolt arrangement are designed to withstand the loadings resulting from a combination of nozzle loadings acting simultaneously with the vessel seismic and static loadings.

5.4.11.2 System Description

The piping and instrumentation diagram for the Pressurizer Relief Discharge System is given in Figure 5.1.2-2. The general configuration of the PRT is shown in Figure 5.4.11-1.

The tank is a horizontal, cylindrical vessel with elliptical dished heads. The vessel is constructed of austenitic stainless steel and is overpressure protected in accordance with the ASME Code, Section VIII, Division 1, by means of two safety heads with stainless steel rupture discs.

The steam and water discharged from the various safety and relief valves inside Containment is routed to the PRT if the discharged fluid is of reactor grade quality. Table 5.4.11-2 provides an

itemized list of valves discharging to the PRT together with references of the corresponding piping and instrumentation diagrams.

In order to obtain effective condensing and cooling of the discharged steam, the tank is installed horizontally with the steam discharged through a sparger pipe located near the tank bottom and under the water level. The sparger holes are designed to ensure a resultant steam velocity close to sonic.

A flanged nozzle is provided on the PRT for the pressurizer discharge line connection to the sparger pipe. The PRT is also equipped with an internal spray connected to a cold water inlet and with a bottom drain, which are used to cool the tank following a discharge. Cold water is drawn from the

Reactor Makeup Water System, or the contents of the tank are circulated through the reactor coolant drain tank heat exchanger of the Waste Processing System and back into the spray header.

The PRT normally contains water and a predominantly nitrogen atmosphere. Hydrogen inleakage to the PRT may exist due to diffusive seat leakage from valves which discharge to the tank. The nitrogen gas blanket is used to exclude air and prevent the formation of an explosive hydrogen-oxygen mixture in the PRT, and to allow room for the expansion of the original water plus the condensed steam discharge. The tank gas volume is calculated using a final pressure based on a design pressure of 100 psig. The design discharge raises the worst case initial conditions to 50 psig, a pressure low enough to prevent fatigue of the rupture discs. Provision is made to permit the gas in the PRT to be periodically analyzed to monitor the concentration of hydrogen and/or oxygen.

The contents of the PRT can be drained to the waste holdup tank in the Waste Processing System or the recycle holdup tank in the Boron Recycle System via the reactor coolant drain tank pumps in the Waste Processing System.

5.4.11.3 Safety Evaluation

The Pressurizer Relief Discharge System does not constitute part of the reactor coolant pressure boundary per 10 CFR 50, Section 50.2, since all of its components are downstream of the RCS safety and relief valves. Thus, General Design Criteria 14 and 15 are not applicable. Furthermore, complete failure of the auxiliary systems serving the PRT will not impair the capability for safe plant shutdown.

The design of the system piping layout and piping restraints is consistent with Regulatory Guide 1.46 for moderate energy piping. Regulatory Guide 1.67 is not applicable since the system is not an open discharge system.

The Pressurizer Relief Discharge System is designed to accommodate the discharge of steam equivalent to 110% of the pressurizer steam volume at an RCS average temperature of 588.8°F without exceeding the design pressure and temperature of the PRT.

The volume of water in the PRT is capable of absorbing the heat from the assumed discharge while maintaining the water temperature below 200°F. If a discharge exceeding the design

basis should occur, the relief devices on the tank would pass the discharge through the tank to the Containment.

Rupture of the PRT rupture discs will not adversely affect any safety-related systems, structures, or components.

The rupture discs on the relief tank have a relief capacity equal to or greater than the combined capacity of the pressurizer safety valves. The tank design pressure is twice the calculated pressure resulting from the design basis safety valve discharge described in Section 5.4.11.1. The tank and rupture discs holders are also designed for full vacuum to prevent tank collapse if the content cools following a discharge without nitrogen being added.

The discharge piping from the pressurizer safety and relief valves to the relief tank is sufficiently large to prevent backpressure at the safety valves from exceeding 20 percent of the setpoint pressure at full flow. The pressurizer safety and power operated relief valve capacities are given in Table 5.4.13-1.

5.4.11.4 Instrumentation Requirements

The pressurizer relief tank pressure transmitter provides an indication of pressure relief tank pressure in the Control Room. An alarm is provided to indicate high tank pressure.

The pressurizer relief tank level transmitter supplies a signal for an indicator with high and low level alarms in the Control Room.

The temperature of the water in the pressurizer relief tank is indicated in the control room , and an alarm actuated by high temperature informs the operator that cooling of the tank contents is required.

5.4.11.5 Inspection and Testing Requirements

The system components are subjected to nondestructive and hydrostatic testing during construction in accordance with Section VIII, Division 1 of the ASME Code.

During plant operation, periodic visual inspections and preventive maintenance are conducted on the system components according to normal industrial practice.

5.4.12 VALVES

5.4.12.1 Design bases

As noted in Section 5.2, all RCS valves larger than 3/4 in. out to and including the second valve normally closed or capable of automatic or remote closure, are both ANS safety class 1 and ASME B&PV Code, Section III, code class 1 valves. All 3/4 in. or smaller valves in lines connected to the RCS are class 2, since the interface with the class 1 piping is provided with suitable orificing in accordance with 10 CFR 50.55a, footnote 2 for such lines. Design data for the RCS valves are given in Table 5.4.12-1. Reliability tests and inspections for these valves are discussed in Section 6.3.4.2.

To ensure that the valves meet the design objectives, the materials of construction minimize corrosion and erosion and are compatible with the environment. Leakage is minimized to the extent practicable by design.

5.4.12.2 Design description

All manual and motor operated valves of the RCS which are 3 in. and larger are provided with double-packed stuffing boxes and intermediate lantern ring leakoff connections. All throttling control valves are provided with double packed stuffing boxes and with stem leakoff connections. In general, RCS leakoff connections are piped to a closed collection system. Leakage to the atmosphere is essentially zero for these valves. Valves less than 3 in. in diameter are single-packed and are not provided with leak-off protection.

Gate valves at the engineered safety features interface are wedge design and are essentially straight through. The wedges are flex-wedge or solid. All gate valves have backseats. Globe valves are "T" and "Y" style. Check valves are swing type for sizes 2-1/2 in. and larger. All check valves which contain radioactive fluid are stainless steel and do not have body penetrations other than the inlet, outlet, and bonnet. The check hinge is serviced through the bonnet.

All operating parts for check valves are contained within the body. The disc has limited rotation to provide a change of seating surface and alignment after each valve opening.

5.4.12.3 Design evaluation

The design requirements for class 1 valves, as discussed in Section 5.2, limit stresses to levels which ensure their structural integrity. In addition, the testing programs described in Section 3.9 demonstrate the ability of the valves to operate as required during anticipated and postulated plant conditions.

Reactor coolant chemistry parameters are specified in the design specifications to assure the compatibility of valve construction materials with the reactor coolant. To ensure that the reactor coolant continues to meet these parameters, the chemical composition of the coolant is analyzed periodically.

The above requirements and procedures, coupled with the previously described design features for minimizing leakage, ensure that the valves will perform their intended functions as required during plant operation.

5.4.12.4 Tests and inspections

The tests and inspections discussed in Section 3.9 are performed to ensure the operability of active valves.

There are no full-penetration welds within valve body walls. Valves are accessible for disassembly and internal visual inspection to the extent practical. Plant layout configurations determine the degree of inspectability. The manufacturer’s valve nondestructive examination program is given in Table 5.4.12-2. Inservice inspection is discussed in Section 5.2.4.

5.4.12.5 Reactor Coolant System High Point Vents

5.4.12.5.1 System description

The Reactor Coolant System (RCS) High Point Vent System is designed to remove non-condensable gases from the primary system that could inhibit core cooling during natural circulation. The system consists of remotely operated valves to exhaust the gases from the reactor vessel head and pressurizer. The system is designated as seismic category I and is designed to operate in a post-accident environment. The system arrangement as shown provides redundant and diverse venting paths for the reactor vessel head and pressurizer, utilizing only safety grade equipment. The system can be aligned to vent from the reactor vessel head or the pressurizer to the containment atmosphere or the pressurizer relief tank (PRT). Small quantities of gas may be vented to the PRT without rupturing the PRT rupture discs. This permits gas removal from the RCS without contaminating the containment atmosphere. The system is designed such that any single active failure will not prevent the capability to vent the gases from the reactor vessel head or pressurizer. A disconnection is provided for the reactor vessel head vent to accommodate refueling. Figure 5.4.12-1 is a diagram of the RCS High Point Vent System.

5.4.12.5.2 Design criteria

a) The RCS High Point Vent System is designed to meet the requirements of NUREG-0737, Section II.B.1.

b) The system permits remote (from control room) venting of the reactor vessel head or pressurizer.

c) The system is designed for a single active failure with active components powered from their respective redundant emergency power sources. The system has parallel vent paths with valves powered from alternate power sources. A single failure of the vent valves power supply or control system will not prevent isolation of each vent path when required. Table 5.4.12 3 shows a failure mode and effects analysis for the RCS High Point Vent System.

d) The vent path to the containment is discharged into a well-ventilated area to provide good mixing with containment air.

e) The system is designed with one inch (nominal size) piping to provide adequate venting capacity while limiting coolant liquid loss to less than the make-up capacity of one charging pump in the event of a safety class 2 pipe break or inadvertent valve operation, thus limiting leakage to less than the LOCA definition of 10 CFR 50, Appendix A. The system does not have piping greater than one inch nominal size.

f) The solenoid-operated valves are powered from safety grade 120V AC power supplies. Power is removed from the fail-closed valves by utilizing pull-to-lock control switches to minimize the possibility of inadvertent actuation during normal operation.

g) Valve position indication (open/closed) is provided in the control room for all remotely-operated valves.

h) The system is designed so that each vent valve may be tested for operability during plant operation.

i) The design temperature and pressure of the piping, valves, and components in the system are as follows:

Design Pressure	2485 psig
Design Temperature	650°F and 680°F

The piping and component material used up to and including the second isolation valves are as follows:

Piping	ASME SA-376 TP304 or TP316 Seamless
Flange	ASME SA-182 Gr. F316
Valve - Body	ASME SA-182 Type F316 L
Valve - Bonnet	ASME SA-479 Type 316
Valve - Disc	ASME SA-564 Gr. 630

All materials selected are compatible with reactor coolant chemistry and will be fabricated and tested in accordance with SRP Section 5.2.3 "Reactor Coolant Pressure Boundary Materials."

j) All essential portions of the system are seismic category I.

k) The system is designed such that inadvertent actuation of any single valve will not result in a loss of reactor coolant inventory. To vent the RCS through either the pressurizer or reactor vessel head requires actuation of two valves. Inadvertent actuation of two valves is not a credible event. Additionally, the path from the reactor vessel head utilizes a 3/8 inch diameter orifice. This orifice size is sufficient to limit flow to less than the makeup capacity of one charging pump as described in Section 6.3.3.2.

5.4.12.5.3 System operation

During normal operation of the plant, all remotely operated valves in the RCS High Point Vent System are closed and power is removed from the valves.

All remotely operated valves in the system are provided with valve position indication in the control room (AEP-1 panel). Valve position indication is not interrupted during normal operation due to the valves control circuit configuration which removes the valves control power via a pull-to-lock switch in the main control room, but allows valve position indication to remain.

The need for initiation and termination of venting of the reactor vessel head will be determined by the instrumentation for detection of inadequate core cooling provided in accordance with the requirements of NUREG-0737, II.F.2. For the initiation and termination of venting of the pressurizer sampling can be used to determine the hydrogen concentration in the pressurizer.

The reactor vessel head vent path can be used as a means of pressurizer level control during natural circulation cooldown, if the RCS normal and excess letdown flowpaths are unavailable.

To initiate venting of the reactor vessel head or the pressurizer, the isolation valves in one train are opened in conjunction with reactor coolant make-up and pressurizer heaters to maximize the margin to saturation and provide for RCS refill. If one train of isolation valves is unavailable due to a single failure, then the redundant train of isolation valves is opened. The venting operation is terminated by closing all isolation valves.

Redundancy is provided by powering redundant valves from separate emergency buses in order to ensure that the venting capability from each high point is maintained after a single failure of an emergency power train.

Upon loss of emergency power train A, the reactor vessel head can be vented by opening valves 1RC-V280SB-1 and 1RC-V285SB-1 to the containment atmosphere or the PRT, and the pressurizer can be vented by opening valves 1RC-V282SB-1 and 1RC-V285SB-1 to the containment atmosphere or the PRT. Upon loss of emergency power train B, the reactor vessel head can be vented by opening valves 1RC-V281SA-1 and 1RC-V284SA-1 to the containment atmosphere, and the pressurizer can be vented by opening valves 1RC-V283SA-1 and 1RC-V284SA-1 to the containment atmosphere. Separation of safety trains is discussed in Section 8.3.1.2.30.

The system valves are tested in accordance with ASME Section XI, Subsection IWV, for category B valves (reference NUREG-0737, Item II.B.1, Clarification A.(11)).

SHNPP's Emergency Operating Procedures (EOPs) are based on the Westinghouse Owner's Group (WOG) Emergency Response Guidelines (ERGs). In plant procedure FRP I.3, "Response to Voids in Reactor Vessel," guidance is provided for using the system, and the following information is included:

a) Entry conditions (through the use of Critical Safety Function Status trees);

b) Consideration of containment hydrogen concentration in determining whether to vent the reactor vessel head and the duration of venting;

c) Reference to instrumentation used to detect and control reactor vessel head voiding;

d) Guidance for the control operator on the use of the system.

In addition, the EOPs for inadequate core cooling provide methods other than the RCS venting to assure that decay heat is removed from the core (i.e., RCP operation and primary bleed and feed cooling).

The initial issuance of the plant-specific EOPs were subject to a verification and validation process, including plant-specific simulator verification as well as internal and external technical and human factors reviews, to assure that the guidance provided for mitigating a non-condensable gas bubble was adequate and complete.

The location of the controls and instrumentation in the main control room, required for system operation or testing has been reviewed in accordance with the requirements of NUREG-0737 Item 1.D.1, "Control Room Design Review."

5.4.12.5.4 Component.

a) Piping and Valves

All piping and valves for the RCS High Point Vent System are designated as seismic category I; designed and fabricated in accordance with the requirements of ASME code safety class 1 and 2 as required; and constructed of austenitic stainless steel. The solenoid operated isolation valves are seismically and environmentally qualified per Sections 3.10 and 3.11 and designed to fail closed to minimize the potential for inadvertent operation of the system. The safety class 1 orifice at the reactor vessel head is designed to limit the coolant loss to less than the make-up capacity of one charging pump in the event of safety class 2 pipe rupture.

Valve positions are provided in the main control room for all remotely operated valves. Position indication for these pilot operated solenoid valves is provided by reed switches on the solenoid.

The system valves are designed to fail closed if power is lost to a valve (or train of valves).

A single failure within either power or control circuits would neither prevent the system from performing on demand nor prevent isolation of each vent path when required.

b) Instrumentation and Control

The system is designed to be controlled remotely from the main control room. All safety related instrumentation is powered from emergency power sources and is seismically and environmentally qualified per Sections 3.10 and 3.11. Position indication (open/closed) is provided for all remotely operated valves and displayed in the control room. Flow instrumentation is also provided to monitor system performance and any valve leakage.

5.4.12.5.5 Safety evaluation

The RCS High Point Vent System may be required to operate during an accident and in the post-accident condition to remove non-condensable gases from the RCS. To assure operability under those conditions, the components of the system required to perform venting operations are environmentally qualified to operate under post-accident containment conditions. The reactor vessel head and pressurizer vent paths are each provided with redundant valves powered from separate emergency power supplies. Parallel valves assure a vent flow path in the event of single active failure.

The component, valves, piping and supports for the vent system are specified as seismic category 1. All valves have been qualified for operability during and following a seismic event. Instrumentation and controls required to operate the vent system are safety grade, powered from emergency power sources and are seismically and environmentally qualified as discussed in Sections 3.10 and 3.11.

The reactor vessel head vent is provided with a flow limiting orifice (3/8 inch diameter) to limit the mass loss from RCS to an amount less than the make-up capacity of a charging pump as described in Section 6.3.3.2.

The system is designed to permit venting of RCS gases to the containment atmosphere or the PRT during an accident and in post-accident condition. A Failure Modes and Effects Analysis for the system is given on Table 5.4.12-3.

The system is designed to preclude failures that may prevent the essential operation of safety-related systems required for safe reactor shutdown or mitigation of the consequences of a design basis accident.

5.4.13 SAFETY AND RELIEF VALVES

5.4.13.1 Design Bases

The combined capacity of the pressurizer safety valves will accommodate the maximum surge resulting from complete loss of load. This objective is met without reactor trip or any operator action.

The pressurizer power operated relief valves are designed to limit pressurizer pressure to a value below the fixed high pressure reactor trip setpoint. They are pneumatically operated and are designed to fail to the closed position on loss of electrical power to the control solenoid valves, or should the supply of nitrogen and instrument air be removed. However, because two of the valves may be used to mitigate an SGTR event, they are classified as "active." For this application, the pneumatic accumulators are qualified and store sufficient nitrogen to open the valves.

Steam generator safety valves are designed to protect the steam system, as required by the ASME Code, Section III, Subsection NC. They are conservatively sized to pass to steady flow equivalent to 105 percent of the rated NSSS steam flow at 110 percent steam generator shell side design pressure.

The main steam power operated relief valves (ASME Section III) are designed to limit the pressurizer pressure to a value below the high-pressure trip set point for all design transients up to and including the design percent step load decrease with steam dump but without reactor trip.

5.4.13.2 Design Description

5.4.13.2.1 Pressurizer Safety and Power Operated Relief Valves

The pressurizer safety valves, shown on Figure 5.4.13-1, are of the pop-type. The valves are spring loaded, open by direct fluid pressure action, and have backpressure compensation features which are provided by a balancing bellows and balancing piston. Tests, conducted as part of the EPRI safety valve test program, demonstrated that backpressure has little, if any, effect on valve performance.

The pipe connecting each pressurizer nozzle to its safety valve is shaped in the form of a loop seal. Condensate resulting from normal heat losses accumulates in the loop. The water prevents any leakage of hydrogen gas or steam through the safety valve seats. If the pressurizer pressure exceeds the set pressure of the safety valves, they start lifting, and the water from the seal discharges during the accumulation period.

The pressurizer power operated relief valves, shown on Figure 5.4.13-2, are pneumatically actuated valves which respond to a signal from a pressure sensing system or to remote manual control. A water seal is maintained upstream of each relief valve seat to minimize leakage. Remotely operated stop valves are provided to isolate the power operated relief valves if excessive leakage develops.

Temperatures in the pressurizer PORV discharge lines are measured and indicated in the Control Room. Temperatures on the Code Safety Relief Valve inlet lines are also measured and indicated in the Control Room. An increase in either PORV discharge or Safety Relief Valve inlet line temperature is an indication of leakage or relief through the associated valve. Design parameters for the pressurizer safety and power operated relief valves are given in Table 5.4.13-1.

5.4.13.2.2 Steam Generator Safety and Power Operated Relief Valves

Overpressure protection for the shell side of the steam generators and the main steam line up to the main steam isolation valves is provided by the steam generator safety valves. A total of 15 valves, five on each main steam line, are actuated with staggered set pressures. The valves are spring loaded safety valves procured in accordance with ASME Boiler and Pressure Vessel Code, Section III. A schematic of a steam generator safety valve is shown on Figure 5.4.13-3. A description of the steam generator safety valves is provided in Section 10.3.2.2. The design parameters are given in Table 10.3 1.

The steam generator secondary side is equipped with three power operated valves (one on each loop) which maintain main steam pressure at a desired value during start-up, hot standby, or transient conditions by modulating the discharge to atmosphere. A schematic of a steam generator power operated relief valve is shown on Figure 5.4.13-4. A description of the steam generator power operated relief valves is provided in Section 10.3.2.2. The design parameters are given in Table 10.3.1.

The design evaluation of the steam generator safety and power operated relief valves is contained in Sections 5.2.2 and 10.3.

5.4.13.3 Design Evaluation

The pressurizer safety valves prevent RCS pressure from exceeding 110 percent of system design pressure, in compliance with the ASME Code, Section III.

The pressurizer power-operated relief valves prevent actuation of the fixed reactor high pressure trip for all design transients up to and including the design step load decreases with steam dump. The relief valves also limit undesirable opening of the spring-loaded safety valves. In addition, they provide reactor vessel low temperature overpressure protection (discussed in Section 5.2.2.11) and may be used to mitigate an SGTR event. Since the valve fluid conditions during an SGTR event are bounded by normal plant conditions, they will be operable. Refer to Section 3.9.3.3.2 for further discussion.

5.4.13.4 Tests and Inspections

All safety and power operated relief valves are subjected to hydrostatic tests, seat leakage tests, operational cycling tests, and inspections as required. For safety valves that are required

to function during a faulted condition, additional tests are performed. Valve testing requirements are provided in Section 3.9 and the Technical Specifications.

There are no full penetration welds within the valve body walls. Valves are accessible for disassembly and internal visual inspection.

5.4.14 COMPONENT SUPPORTS

5.4.14.1 Design Bases

Component supports allow unrestrained lateral thermal movement of the reactor coolant loop during plant operation and provide restraint to the loops and components during accident and seismic conditions. Westinghouse Letter CQL-90-522 also provides an alternative design basis which restrains some thermal movement. The loading combinations and design stress limits are discussed in Section 3.9.1.4. Support design is in accordance with the AISC specification for the design, fabrication, and erection of structural steel for buildings (1969). The design maintains the integrity of the RCS boundary for normal, seismic, and accident conditions and satisfies the requirements of the piping code. Results of piping and supports stress evaluation are presented in Section 3.9.

5.4.14.2 Description

The support structures are welded structural steel sections. Linear type structures (tension and compression struts, columns, and beams) are used in all cases except for the reactor vessel supports, which are plate type structures. Attachments to the supported equipment are non-integral type that are bolted to or bear against the components. The supports-to-concrete attachments are either anchor bolts or embedded fabricated assemblies.

The supports permit unrestrained thermal growth of the supported systems but restrain vertical, lateral, and rotational movement resulting from seismic and pipe break loadings. Westinghouse Letter CQL-90-522 also provides an alternative design basis which restrains some thermal movement. This is accomplished using spherical bushings in the columns for vertical support and girders, bumper pedestals, hydraulic snubbers, and tie-rods for lateral support.

Because of manufacturing and construction tolerances, ample adjustment in the support structures is provided to ensure proper erection alignment and fit-up. This is accomplished by shimming or grouting at the supports-to-concrete interface and by shimming at the supports-to-equipment interface.

The supports for the various components are described in the following paragraphs.

5.4.14.2.1 Reactor pressure vessel

Supports for the reactor vessel (Figure 5.4.14-1) are individual air cooled rectangular box structures beneath the vessel nozzles bolted to the primary shield wall concrete. Each box structure consists of a horizontal top plate that receives loads from the reactor vessel shoe, a horizontal bottom plate which transfers the loads to the primary shield wall concrete, and connecting vertical plates. The supports are air cooled to maintain the supporting concrete temperature within acceptable levels.

5.4.14.2.2 Steam generator

As shown in Figure 5.4.14-2, the steam generator supports consist of the following elements:

a) Vertical support - Four individual columns provide vertical support for each steam generator. These are bolted at the top to the steam generator and at the bottom to the concrete structure. Spherical ball bushings at the top and bottom of each column allow unrestricted lateral movement of the steam generator during heatup and cooldown. The column base design permits both horizontal and vertical adjustment of the steam generator for erection and adjustment of the system.

b) Lower lateral support - Lateral support is provided at the generator tube sheet by fabricated steel girders and struts. These are bolted to the compartment walls and include bumpers that bear against the steam generator but permit unrestrained movement of the steam generator during changes in system temperature. Stresses in the beams caused by wall displacements during compartment pressurization are considered in the design.

c) Upper lateral support - The upper lateral support of the steam generator is provided by hydraulic snubbers and fabricated steel girders. These supports act during seismic and LOCA events only, and permit the normal thermal movement of the steam generator. The snubbers are in compliance with ASME Section III, Section NF. The snubbers are rated at 1300 Kips for an SSE event.

5.4.14.2.3 Reactor coolant pump

Three individual columns, similar to those used for the steam generator, provide the vertical support for each pump. Lateral support for seismic and blowdown loading is provided by three lateral tension tie bars. The pump supports are shown in Figure 5.4.14-3.

5.4.14.2.4 Pressurizer

The supports for the pressurizer, as shown in Figure 5.4.14-4, consist of:

a) A steel ring plate between the pressurizer skirt and the supporting concrete slab. The ring serves as a leveling and adjusting member for the pressurizer and may also be used as a template for positioning the concrete anchor bolts.

b) The upper lateral support consists of struts cantilevered off the compartment walls that bear against lugs provided on the pressurizer.

5.4.14.3 Evaluation

Detailed evaluation ensures the design adequacy and structural integrity of the reactor coolant loop and the primary equipment supports system. The detailed evaluation is made by comparing the analytical results with established criteria for acceptability. Structural analyses are performed to demonstrate design adequacy for safety and reliability of the plant in case of a large or small seismic disturbance and/or LOCA conditions. Loads which the system is expected to encounter often during its lifetime (thermal, weight, and pressure) are applied and stresses are compared to allowable values, as described in Section 3.9.1.4.

The SSE and design basis LOCA resulting in a rapid depressurization of the system are required design conditions for public health and safety. The methods used for the analysis of the SSE and LOCA conditions are given in Section 3.9.1.4.

5.4.14.4 Tests and Inspections

Nondestructive examinations are performed in accordance with the procedures of the ASME Code, Section V.

REFERENCES: SECTION 5.4

5.4.1-1 "Reactor Coolant Pump Integrity in LOCA," September, 1973.

5.4.2-1 "Evaluation of Steam Generator Tube, Tube Sheet and Divider Plate Under Combined LOCA Plus SSE Conditions," WCAP-7832-A.

TABLE	TITLE
5.1.0-1	SYSTEM DESIGN AND OPERATING PARAMETERS
5.2.1-1	APPLICABLE CODE ADDENDA FOR RCPB COMPONENTS
5.2.1-2	UNIT 1 CODE CASES FOR ASME CLASS 1 EQUIPMENT
5.2.2-1	COMPARISON OF THE SHNPP THERMAL-HYDRAULIC PARAMETERS TO THE TYPICAL WESTINGHOUSE PLANT THERMAL-HYDRAULIC PARAMETERS (WCAP-7769)
5.2.3-1	PRIMARY AND AUXILIARY COMPONENTS MATERIAL SPECIFICATIONS
5.2.3-2	REACTOR VESSEL INTERNALS MATERIAL SPECIFICATIONS
5.2.3-3	DELETED BY AMENDMENT NO. 41
5.3.1-1	REACTOR VESSEL QUALITY ASSURANCE PROGRAM
5.3.1-2	REACTOR VESSEL TOUGHNESS PROPERTIES
5.3.1-3	DELETED BY AMENDMENT NO. 15
5.3.1-6	CHEMICAL COMPOSITION OF REACTOR VESSEL BELTLINE REGION BASE MATERIAL
5.3.1-7	REACTOR VESSEL BELTLINE REGION WELD METAL
5.3.1-8	PREDICTED END-OF-LIFE BELTLINE REGION MATERIAL PROPERTY CHANGES FOR REACTOR VESSEL
5.3.1-9	DELETED BY AMENDMENT NO. 15
5.3.1-10	DELETED BY AMENDMENT NO. 15
5.3.1-11	DELETED BY AMENDMENT NO. 15
5.3.1-12	DELETED BY AMENDMENT NO. 3
5.3.1-13	DELETED BY AMENDMENT NO. 3
5.3.1-14	DELETED BY AMENDMENT NO. 3
5.3.1-15	DELETED BY AMENDMENT NO. 3
5.3.1-16	DELETED BY AMENDMENT NO. 3
5.3.1-17	DELETED BY AMENDMENT NO. 3
5.3.1-18	REACTOR VESSEL CLOSURE HEAD BOLTING MATERIAL PROPERTIES
5.3.1-19	DELETED BY AMENDMENT NO. 15
5.3.1-20	DELETED BY AMENDMENT NO. 3
5.3.1-21	DELETED BY AMENDMENT NO. 3

TABLE	TITLE
5.3.1-22	CALCULATED VALUES FOR RTPTS
5.3.3-1	REACTOR VESSEL DESIGN PARAMETERS
5.4.1-1	REACTOR COOLANT PUMP DESIGN PARAMETERS
5.4.1-2	REACTOR COOLANT PUMP QUALITY ASSURANCE PROGRAM
5.4.2-1	STEAM GENERATOR DESIGN DATA
5.4.2-2	REPLACEMENT STEAM GENERATOR MANUFACTURING QUALITY ASSURANCE PROGRAM
5.4.3-1	REACTOR COOLANT PIPING DESIGN PARAMETERS
5.4.3-2	SAFETY CLASS REACTOR COOLANT PIPING QUALITY ASSURANCE PROGRAM
5.4.7-1	DESIGN BASES FOR RESIDUAL HEAT REMOVAL SYSTEM OPERATION
5.4.7-1A	INPUTS FOR RCS COOLDOWN TIMES
5.4.7-2	RESIDUAL HEAT REMOVAL SYSTEM COMPONENT DATA
5.4.7-3	FAILURE MODE AND EFFECTS ANALYSIS - RESIDUAL HEAT REMOVAL SYSTEM ACTIVE COMPONENTS - PLANT COOLDOWN OPERATION
5.4.10-1	PRESSURIZER DESIGN DATA
5.4.10-2	REACTOR COOLANT SYSTEM DESIGN PRESSURE SETTINGS
5.4.10-3	PRESSURIZER QUALITY ASSURANCE PROGRAM
5.4.11-1	PRESSURIZER RELIEF TANK DESIGN DATA
5.4.11-2	TABLE VALVE DISCHARGE TO THE PRESSURIZER RELIEF TANK
5.4.12-1	REACTOR COOLANT SYSTEM VALVE DESIGN PARAMETERS
5.4.12-2	REACTOR COOLANT SYSTEM VALVES NONDESTRUCTIVE EXAMINATION PROGRAM
5.4.12-3	RCS HIGH POINT VENT SYSTEM FAILURE MODES AND EFFECT ANALYSIS
5.4.13-1	PRESSURIZER VALVES DESIGN PARAMETERS

TABLE 5.1.0-1

SYSTEM DESIGN AND OPERATING PARAMETERS (Note 1)

Plant Design Life/Plant Service Life for License Renewal (years)	40/60
Nominal Operating Pressure, psig	2235
Total System Volume, Hot, Including Pressurizer and Surge Line (ft^3)	10306
System Liquid Volume, Hot, Including Pressurizer Water at Maximum Guaranteed Power (ft^3)[Total System Volume less Pressurizer Steam Volume]	9720
Pressurizer Spray Rate, Maximum (gpm)	700
Pressurizer Heater Capacity (kW)	1294

SYSTEM THERMAL AND HYDRAULIC DATA

	UPRATED POWER (0% SGTP)	
RCS AVERAGE TEMPERATURE	588.8°F	572.0°F
Total Unit Thermal Output, MWt	2970.4	2970.4
Licensed Core Thermal Power, MWt	2958	2958
Thermal Design Flows, gpm		
Active Loop	92,600	92,600
Idle Loop	-	-
Reactor	277,800	277,800
Total Reactor Flow, 10^6 lb/hr	103.9	106.4
Temperatures, F		
Reactor Vessel Outlet	623.8	608.0
Reactor Vessel Inlet	553.8	536.0
Steam Generator Outlet	553.5	535.7
Steam Generator Steam	540.7	522.4
Feedwater	440	440
Steam Pressure, psia	988	830
Total Steam Flow, 10^6 lb/hr	13.10	13.01
Best Estimate Flows, gpm		
Active Loop	102,400	102,400
Idle Loop	-	-
Reactor	307,200	307,200
Mechanical Design Flows, gpm		
Active Loop	107,100	107,100
Idle Loop	-	-
Reactor	321,300	321,300
Core Bypass Flow, % Total Reactor Flow	8.6 (TPR)	8.6 (TPR)

Technical Specification Minimum Flows, gpm(used for safety analysis by fuel vendor)	293,540	293,540

Table 5.1.0-1 (Continued)

SYSTEM PRESSURE DROPS AT BEST ESTIMATE FLOW (Note 1)(Note3)

Reactor Vessel ΔP, psi	44.4
Steam Generator ΔP, psi	41.7
Hot Leg Piping ΔP, psi	1.4
Pump Suction Piping ΔP, psi	3.6
Cold Leg Piping ΔP, psi	3.8 (Note 2)
Reactor Coolant Pump Head, ft	287.3

Notes:

1 .Information provided is based on a midrange value for RCS average temperature of 580.8°F at 0% SGTP.

2 .Includes pump weir ΔP of 2.3 psi.

3. Represents frictional loss only and does not consider velocity or elevation head differences.

TABLE 5.2.1-1

APPLICABLE CODE ADDENDA FOR RCPB COMPONENTS

Component	Required by 10 CFR 50.55a	Designed and Fabricated
Reactor vessel	Summer 1972	Winter 1971
Full length CRDM housing	Summer 1972	Summer 1974
CRDM head adapter plugs	Summer 1972	Winter 1976
Reactor coolant pump	Winter 1972	Summer 1972
Replacement Steam generator	Summer 1972	Summer 1972 (Design)* 1986 Edition (Fabrication)
Pressurizer	Summer 1972	Summer 1972
Reactor coolant loop pipe	Winter 1972	Summer 1973
Surge line	Winter 1972	Summer 1973
Pipe nozzles on primary loop for other systems connections	Winter 1972	Summer 1973
Connecting systems piping	Winter 1972	Summer 1973
RCP No. 1 seal bypass orifice	Winter 1972	Not purchased
Valves	Winter 1972	
Pressurizer safety		Winter 1972
Motor operated		Winter 1972
Manual (3 in. and larger)		Winter 1972
Control		Summer 1972
Globe (2 in. and smaller)		Summer 1976
Check (2 in. and smaller)		Summer 1973

*1986 Code Edition is applicable for materials not available in Summer 1972 Code.

TABLE 5.2.1-2

UNIT 1 CODE CASES FOR ASME CLASS 1 EQUIPMENT

Equipment	Code Case
BMI Tubing and Coupling	None
Reactor Vessel	1401
CRDM	None
Steam Generator	N-20-3, N-474-1, 2142, 2143, N401-1
RC Pumps	----*
Pressurizer	1528, 1493, N740**
RC Pipe	1423-1, 1423-2
Valves (Class 1):	
Copes Vulcan	1388-1, 1649
W EMD	1553-1, 1649
Fisher Control	1501, N-3-10
Crosby	None

* No Code Form Available as of 6/1/83

** Pressurizer nozzles Alloy 82/182 weld overlay. See 3RD Interval ISI Program.

TABLE 5.2.2-1

COMPARISON OF THE SHNPP THERMAL-HYDRAULIC PARAMETERS TO THE TYPICAL WESTINGHOUSE PLANT THERMAL-HYDRAULIC PARAMETERS (WCAP-7769)

	Units	2-Loop	3-Loop	SHNPP	4-Loop
Heat Output, Core	Mwt	1,780	2,652	2,775	3,411
System Pressure	psia	2,250	2,250	2,250	2,250
Coolant Flow	gpm	178,000	265,500	292,800	354,000
Average Core Mass Velocity	10^6 lb/hr-ft^2	2.42	2.33	2.47	2.50
Inlet Temperature	F	545	544	556	552.5
Core Average T_{mod}	F	581	580	591.2	588
Core Length	Ft	12	12	12	12
Average Power Density	kw/1	102	100	104.5	104
Maximum Fuel Temperature	F	<4100	<4200	<4200	<4200
Fuel Loading	kg/1	2.7	2.6	2.6	2.6
Pressurizer Volume	Ft^3	1000	1400	1400	1800
Pressurizer Volume Ratioed to Primary System Volume		0.157	0.148	0.153	0.148
Peak Surge Rate for Pressurizer Safety Valve Sizing Transient	Ft^3/sec	21.8	33.2	39.1	41.0
Pressurizer Safety Valve Flow at 2500 psia - +3% Accumulation	Ft^3/sec	26.1	36.1	40.2	43.3
Ratio of Safety Valve Flow to Peak Surge Rate		1.197	1.087	1.028	1.056
Full Power Steam Flow per Loop	lb/sec	1078	1076	1130	1038
Nominal Shell-side Steam Generator Water Mass per Loop	lb	100,300	106,000	104,000	106,000

Note: This table was provided for comparison purposes prior to actual plant operation and is to be retained for historical purposes only. Refer to FSAR Section 15.2 for current information.

TABLE 5.2.3-1 PRIMARY AND AUXILIARY COMPONENTS MATERIAL SPECIFICATIONS

Reactor Vessel Components	
Shell and head plates (other than core region)	SA-533, Grade A, B or C, Class 1 or 2 (vacuum treated)
Shell plates (core region)	SA-533, Grade A or B, Class 1 (vacuum treated)
Shell, flange and nozzle forgings, nozzle safe ends	SA-508, Class 2 or 3; SA-182, Grade F304 or F316
CRDM and/or ECCS appurtenances, upper head	SB-166 or SB-167 and SA-182, Grade F304, F304L, or F316
Instrumentation tube appurtenances, lower head	SB-166 or SB-167 and SA-182, Grade F304, F304L or F316
Closure studs, nuts, and washers,	SA-540, Class 3, Grade B23 or B24
Core support pads	SB-166 with carbon less than 0.10 percent
Monitor tubes and vent pipe	SA-312 Grade TP304 or TP316, Seamless; SA-376, Grade TP304 or TP316; SB-167
Vessel supports, seal ledge and head lifting lugs (Note: These applications are not pressure retaining)	SA-516, Grade 70 (quenched and tempered); SA-533, Grade A, B or C, Class 1 or 2 (Vessel supports may be of weld metal buildup of equivalent strength of the nozzle material)
Cladding and buttering	Stainless Steel Weld Metal Analysis A7* and Ni-Cr-Fe Weld Metal F-Number 43
Steam Generator Components	
Pressure plates	SA-533, Type B, Class 2
Pressure forgings (including nozzles and tube sheet)	SA-508, Class 1a or 3a
Primary nozzle safe end forgings	SA-336 Class F316LN
Channel heads	SA-508, Class 3a
Tubes	SB-163 (Ni-Cr-Fe Alloy 690 (UNS N06690) and Code Case N-20-3 Thermally Treated.
Cladding	
Channel Head Interior	Austenitic Stainless Weld Desposited with SFA-5.9, ER309L/E308L and SFA-5.4, E309L/E308L. Cobalt 0.10% Maximum; Carbon 0.08% Maximum; Chromium 18% Minimum; Nickel 8% Minimum.
Tube Plate Primary Side	Ni-Cr-Fe Alloy Cladding[1]
Tube Plate Primary Side Flat Peripheral Section Outboard of Tube Holes, Corner Radius, and Lip I.D.	Austenitic Stainless cladding; Carbon 0.08% Maximum; Chromium 18% Minimum; Nickel 8% Minimum.
Selected Weld Surfaces	
Safe End Butter and Structural Weld	Last Layer of weld to be Ni-Cr-Fe Alloy cladding[1] or clad with Ni-Cr-Fe Alloy cladding[1] over last layer of weld including tie-in to stainless steel clad.
Stub Runner and Partition Plate Stuctural Weld	Last layer of weld to be Ni-Cr-Fe Alloy cladding[1] or overlay with Ni-Cr-Fe Alloy cladding[1] over last layer of weld.
Channel Head Girth/ Weld Back Clad	Overlay with Ni-Cr-Fe Alloy cladding[1] over last layer of weld.
Primary Nozzle Closure Rings Attachment Weld	Last layer of weld to be Ni-Cr-Fe Alloy cladding[1].
Closure bolting and studs	SA-193, Grade B7
Closure nuts and washers	SA-194, Grade 7
Pressurizer Components	
Pressure plates	SA-533, Grade A, B or C, Class 1 or 2

TABLE 5.2.3-1 PRIMARY AND AUXILIARY COMPONENTS MATERIAL SPECIFICATIONS

Pressure forgings	SA-508, Class 2, 2a (Code Case 1528)
Nozzle safe ends	SA-182, Grade F316L
Nozzle safe ends weld overlays	Alloy 52M
Cladding and buttering	Stainless Steel Weld Metal Analysis A-7* and Ni-Cr-Fe Weld Metal F-Number 43
Closure bolting and studs	SA-193, Grade B7
Closure nuts	SA-194, Grade 7
Reactor Coolant Pump	
Pressure forgings	SA-182, Grade F304, F316, F347 or F348
Pressure casting	SA-351, Grade CF8, CF8A or CF8M
Tube and pipe	SA-213; SA-376, Grade TP304 or TP316; SA-312, Type 304 or 316 Seamless
Pressure plates	SA-240, Type 304 or 316
Bar material	SA-479, Type 304 or 316
Closure bolting	SA-193, Grade B7; SA-540, Grade B24, Class 4; SA-453, Grade 660
Flywheel	SA-533, Grade B, Class 1
Piping	
Reactor coolant loop piping	SA-376, Grade TP304N (Code Case 1423-2)
Reactor coolant fittings, branch nozzles, flanges	SA-351, Grade CF8A; SA-182, (Code Case 1423-2) Grade F304 F304N, F316, or F316N; SA-403 Grade WP304, WP316 or WP316W
Pressurizer nozzles weld overlays	Alloy 52M
Surge line	SA-376, Grade TP304, TP316 or TP304N or WP316W
Auxiliary piping	SA-376, Grade TP304 or TP316
Full Length CRDM	
Latch housing	SA-182, Grade F304; SA-351, Grade CF8
Rod travel housing	SA-182, Grade F304; SA-336, Class F8
Cap	SA-479, Type 304
Welding materials	Stainless Steel Weld Metal Analysis A-8
Valves	
Bodies	SA-182, Grade F316; SA-351, Grade CF8 or CF8M
Bonnets	SA-182, Grade F316; SA-351, Grade CF8 or CF8M; SA-479, Type 316
Discs	SA-182, Grade F316; SA-564, Grade 630; SA-351, Grade CF8 or CF8M; AMS-5385 (Stellite 21), SA-479, Type 316
Pressure retaining bolting	SA-453, Grade 660; SA-193, Grade B6
Pressure retaining nuts	SA-453, Grade 660; SA-194, Grade 6, B6 or B8
Auxiliary Heat Exchangers	
Heads	SA-240, Type 304 or 316, SA-182, Grade F304
Flanges	SA-182, Grade F304 or F316
Nozzle necks	SA-182, Grade F304, SA-240, Type 304 or 316, SA-312, Type 304 Seamless or Welded

TABLE 5.2.3-1 PRIMARY AND AUXILIARY COMPONENTS MATERIAL SPECIFICATIONS

Tubes	SA-213, Grade TP304; SA-249, Grade TP304
Tube sheets	SA-182, Grade F304; SA-240, Type 304 or 316; SA-516, Grade 70 with Stainless Steel Weld Metal Analysis A-8 Cladding
Shells	SA-240, Type 304; SA-312, Grade TP304; SA-351, Grade CF8
Pipe	SA-312, Type 304 Seamless
Auxiliary Pressure Vessels, Tanks, Filters, etc.	
Shells and heads	SA-240, Type 304, SA-351, Grade CF8A; SA-264 (consisting of SA 537, Class 1 with Stainless Steel Weld Metal Analysis A-8 Cladding)
Flanges and nozzles	SA-182, Grade F304 and SA-105 or SA-350, Grade LF2 with Stainless Steel Weld Metal Analysis A-8 Cladding
Piping	SA-312 and SA-240; Grade TP304 or TP316 Seamless
Pipe fittings	SA-403, Grade WP304 Seamless
Closure bolting and nuts	SA-193, Grade B7; SA-194, Grade 2H
Auxiliary Pumps	
Pump casing and heads	SA-351, Grade CF8 or CF8M; SA-182, Grade F304 or F316
Flanges and nozzles	SA-182, Grade F304 or F316; SA-403, Grade WP316L Seamless
Piping	SA-312, Grade TP304 or TP316 Seamless
Stuffing or packing box cover	SA-351, Grade CF8 or CF8M; SA-240, Type 304, 304L or 316
Pipe fittings	SA-403, Grade WP316L Seamless
Closure bolting and nuts	SA-193, Grade B6, B7 or B8M; SA-194, Grade 2H, 6 or 8M; SA-453 Grade 660

[1]Weld deposited with SFA-5.14, Cl. ERNiCrFe-7 (UNS N06052) and SFA-5.11, Cl. ENiCrFe-7 (UNS W86152); Cobalt 0.10% Maximum.
* Designated A-8 in 1974 Edition of the ASME Code.

TABLE 5.2.3-2

REACTOR VESSEL INTERNALS MATERIAL SPECIFICATIONS

Forgings	SA-182, Grade F304
Plates	SA-240, Type 304
Pipes	SA-312, Grade TP304 Seamless or SA 376, Grade TP304
Tubes	SA-213, Grade TP304 (Note 1)
Bars	SA-479, Type 304 and 410
Castings	SA-351, Grade CF8 or CF8A
Bolting	SA-193, Grade B8M Class 2 (65KSI Min. Yield/90KSI Min. Ult. Tens. Strength)(Code Case 1618) SA 479, Type 316 strain hardened (Code Case 1618); SA-637, Grade 688, Type 2 (Code Case 1618)
Nuts	SA-193, Grade B8
Locking devices	SA-479, Type 304
Control Rod Guide Tube Support Pin Assemblies	SA-193, Grade B8M Code Case 60-5 SA-194, Grade 8M

Note 1 - For thermal sleeves replaced, in part, to support head adapter nozzle inspections/IDTB welds, ASTM A-511 Grade MT304 material is also acceptable.

TABLE 5.3.1-1

REACTOR VESSEL QUALITY ASSURANCE PROGRAM

		RT*	UT*	PT*	MT*
Forgings					
1.	Flanges				Yes
2.	Studs and nuts		Yes		Yes
3.	CRD head adapter flange		Yes	Yes	
4.	CRD head adapter tube			Yes	
5.	Instrumentation tube		Yes	Yes	
6.	Main nozzles				Yes
7.	Nozzle safe ends			Yes	
Plates			Yes	Yes	
Weldments					
1.	Mean seam	Yes	Yes		Yes
2.	CRD head adapter to closure head connection (Note 1)			Yes	
3.	Instrumentation tube to bottom head connection			Yes	
4.	Main nozzle	Yes			Yes
5.	Cladding		Yes	Yes	
6.	Nozzle to safe ends	Yes	Yes	Yes	
7.	Nozzle to safe ends after hydrotest		Yes	Yes	
8.	CRD head adapter flange to CRD head adapter tube	Yes		Yes	
9.	All full penetration ferritic pressure boundary welds accessible after hydrotest		Yes		Yes
10.	Seal ledge				Yes
11.	Head lift lugs				Yes
12.	Core pad welds			Yes	

*RT - Radiographic
UT - Ultrasonic
PT - Dye Penetrant
MT - Magnetic Particle

Note 1 - For CRD head adapter to closure head welds repaired by IDTB weld process, the weld is examined by UT with PT of final surface.

TABLE 5.3.1-2

REACTOR VESSEL TOUGHNESS PROPERTIES

Component	Grade	Heat No	Cu (Wt%)	Ni (Wt %)	T_{NDT} (F)	INITIAL RT_{NDT} (F)	CHARPY UPPER-SHELF ENERGY TRANSVERSE FT-LB
Closure Hd. Dome	A533B, CL1	A9213-1	-	-	-10	8	114
Head Flange	A508, CL2	5302-V2	-	-	0	0	135
Vessel Flange	A508, CL2	5302-V1	-	-	-10	- 8	110
Inlet Nozzle	A508, CL2	438B-4	-	-	-20	-20	169
Inlet Nozzle	A508, CL2	438B-5	-	-	0	0	128
Inlet Nozzle	A508, CL2	438B-6	-	-	-20	-20	149
Outlet Nozzle	A508, CL2	439B-4	-	-	-10	-10	151
Outlet Nozzle	A508, CL2	439B-5	-	-	-10	-10	152
Outlet Nozzle	A508, CL2	439B-6	-	-	-10	-10	150
Nozzle Shell	A533B, CL1	CO224-1	.12	-	-20	- 1	90
Nozzle Shell	A533B, CL1	CO123-1	.12	-	0	42	84
Inter Shell*	A533B, CL1	A9153-1	.09	.46	-10	60	83
Inter Shell*	A533B, CL1	B4197-2	.09	.50	-10	91	71
Lower Shell*	A533B, CL1	C9924-1	.08	.47	-10	54	98
Lower Shell*	A533B, CL1	C9924-2	.08	.47	-20	57	88
Bottom HD. Torus	A533B, CL1	A9249-2	-	-	-40	14	94
Bottom HD. Dome	A533B, CL1	A9213-2	-	-	-40	-8	125

*For beltline materials, copper and nickel values are "best estimates."

TABLE 5.3.1-6

CHEMICAL COMPOSITION OF REACTOR VESSEL BELTLINE REGION BASE MATERIAL

	Intermediate Shell		Lower Shell	
Element	A9153-1	B4197-2	C9924-1	C9924-2
C	.21	.23	.20	.21
Mn	1.31	1.43	1.35	1.33
P	.007	.006	.005	.005
S	.015	.017	.014	.015
Si	.27	.31	.21	.21
Ni	.45	.50	.45	.44
*Ni	.46	.50	.47	.47
Cr	.11	.12	.10	.10
Mo	.50	.49	.49	.51
Cu	.09	.10	.08	.08
*Cu	.09	.09	.08	.08
V	.000	.000	.001	.001
Ti	.002	.002	.002	.001
Al	.028	.046	.040	.038
B	<.001	.003	<.001	<.001
Pb	<.005	<.005	<.001	<.001
Zr	.001	.002	.001	.000
Co	.014	.011	.011	.010
As	.012	.013	.003	.004
W	<.01	<.01	<.01	<.01
Cb	.000	.000	.001	.001
Sn	.006	.005	.005	.006
N_2	.008	.007	.008	.007

*"Best Estimate" values.

TABLE 5.3.1-7

REACTOR VESSEL BELTLINE REGION WELD METAL+

Weld Seam No.	Weld Wire Type	Weld Wire Heat No.	Flux Type	Flux Lot No.	Cu Wt %	Ni Wt%	T_{NDT} F	INITIAL RT_{NDT} F	C_Y Use FT-LB
BA+BB & BC+BD	INMM	4P4784	LINDE 124	3930 (SINGLE)	.06	.87	-20*	-20	>96
	INMM	4P4784	LINDE 124	3930 (TANDEM)	.05	.91	-20*	-20	>94
	**INMM	4P4784	LINDE 124	3930	.05	.91			
AB	INMM	5P6771	LINDE 124	0342 (SINGLE)	.03	.88	-30	-30	90
	INMM	5P6771	LINDE 124	0342 (TANDEM)	.04	.95	-20	-20	85
	**INMM	5P6771	LINDE 124	0342	.03	.94			
	***INMM	5P6771	LINDE 124	0342	.023	.87			92
	****INMM	5P6771	LINDE 124	0342			-80	-20	80

*Actual T_{NDT} not determined – Value based on two no break tests at -10F.
** “Best Estimate” copper and nickel values.
*** Unirradiated Surveillance weldment data for weld seam AB.
**** Supplemental CB8I test data of the surveillance weldment material.

Wire Heat No.	Flux Lot No.	C	As Deposited Weld Metal Chemical Composition (WT%)+ Mn	P	S	Si	Ni	Cr	Mo	Cu	V	Al
4P4784	3930 (SINGLE)	.097	1.37	.012	.013	.43	.87	.10	.49	.06	.005	.009
4P4784	3930 (TANDEM)	.085	1.32	.013	.012	.48	.91	.14	.49	.05	.005	.007
5P6771	0342 (SINGLE)	.061	1.22	.011	.012	.46	.88	.10	.50	.03	.007	.010
5P6771	0342 (TANDEM)	.062	1.30	0.13	.011	.45	.95	.08	.57	.04	.005	.016

+Based on "as deposited" weld metal from weld qualification tests, except as noted.

TABLE 5.3.1-8

PREDICTED END-OF-LIFE (36 EFPY) BELTLINE REGION MATERIAL PROPERTY CHANGES FOR REACTOR VESSEL

	Initial Values			Fluence** (10^{19}N/CM^2)			$\Delta RT_{NDT(F)}$				Δ USE (FT-LBS)
							1/4 T		3/4 T		1/4 T
							R.G. 1.99.R2		R.G. 1.99.R2		R.G. 1.99.R2
Plate No.	T_{NDT} F	RT_{NDT} F	C_V Use FT/LBS	Inner Wall	1/4 T	3/4 T	Pos. 1	Pos. 2	Pos. 1	Pos. 2	
A9153-1	-10	60	83	4.651	2.835	1.119	74.1		59.8		19.1
*B4197-2	-10	91	71	4.651	2.835	1.119	74.1	65.6	59.8	53.0	16.6
C9924-1	-10	54	98	4.517	2.753	1.086	64.8		52.2		21.2
C9924-2	-20	57	88	4.517	2.753	1.086	64.8		52.2		19.0
Weld Seam No.											
BC+BD	-20	-20	94	1.817	1.108	0.437	70.0		52.4		18.3
AB	-80	-20	80	4.457	2.717	1.072	51.9	62.2	41.8	50.0	20.9
BA+BB	-20	-20	94	1.762	1.074	0.424	69.4		51.8		18.2

* Plate B4197-2 was used in surveillance program.

**The fluence at T/4 and 3T/4 reactor vessel wall locations was derived using the inner wetted surface fluence and the calculative method of R.G. 1-99, Rev. 2.

TABLE 5.3.1-18

REACTOR VESSEL CLOSURE HEAD BOLTING MATERIAL PROPERTIES

Heat No.	Grade	Bar No.	0.2% Ys Ksi	UTS Ksi	Elong %	RA %	BHN	Energy At 10F FT-LBS	Lat. Expansion Mils
Closure Head Studs									
80726	A540, B24	82	146.0	160.0	16.0	51.9	341	47-46-46	30-27-26
80726	A540, B24	82-1	143.5	158.0	16.0	51.4	341	48-48-47	27-28-25
81401	A540, B24	86	151.2	165.0	16.5	56.8	341	54-54-56	31-31-32
81401	A540, B24	86-1	150.0	160.0	17.0	57.5	341	59-59-58	33-34-33
81401	A540, B24	91	149.0	162.0	16.5	55.2	341	57-57-58	30-29-31
81401	A540, B24	91-1	151.0	164.5	16.5	57.3	341	60-58-57	34-33-32
81401	A540, B24	94	146.2	156.0	16.5	54.7	352	58-58-60	36-35-37
81401	A540, B24	94-1	147.5	161.0	17.0	56.5	352	56-56-58	35-32-33
80751	A540, B24	66	141.5	156.5	17.0	52.5	341	50-51-52	31-30-32
80751	A540, B24	66-1	142.5	158.0	17.5	54.7	331	55-54-56	35-30-35
80751	A540, B24	70	137.5	156.0	17.5	52.5	341	57-56-57	36-33-35
80751	A540, B24	70-1	147.5	161.5	17.0	53.8	341	52-51-50	28-28-29
80751	A540, B24	75	140.0	156.0	17.0	54.1	341	48-51-48	32-33-28
80751	A540, B24	75-1	150.2	163.2	16.5	53.6	352	51-52-53	29-32-32
80751	A540, B24	81	146.8	162.0	16.5	51.9	341	50-47-51	28-26-27
80751	A540, B24	81-1	145.0	160.0	17.0	53.3	352	54-55-54	32-31-30
Closure Head Nuts and Washers									
81254	A540, B23	13	142.5	154.5	17.0	58.3	321	54-59-58	33-37-39
81254	A540, B23	13-1	139.2	152.0	17.0	59.1	321	59-61-60	40-39-38
81254	A540, B23	19	142.0	155.0	17.0	56.8	311	55-56-54	33-34-33
81254	A540, B23	19-1	138.5	152.0	16.5	58.6	311	59-60-59	36-36-36
81254	A540, B23	23	141.0	154.0	17.0	58.1	321	57-57-58	37-36-38
81254	A540, B23	23-1	144.0	156.5	16.5	58.6	311	55-56-55	33-37-34

TABLE 5.3.1-22

CALCULATED VALUES FOR RT_{PTS}

Beltline Material	RT_{PTS} at 36 EFPY	Screening Criteria 10CFR50.61
Plate B4197-2	196.2°F	270°F
Plate A9153-1	174.3°F	270°F
Plate C9924-1	158.3°F	270°F
Plate C9924-2	161.3°F	270°F
Weld 4P4784 (BC+BD)	114.9°F	270°F
Weld 4P4784 (BA+BB)	114.5°F	270°F
Weld 5P6771 (AB)	75.6°F	300°F

TABLE 5.3.3-1

REACTOR VESSEL DESIGN PARAMETERS

Design/operating pressure (psig)	2485/2235
Design temperature (F)	650
Overall height of vessel and closure head, bottom heat outside diameter to top of control rod mechanism adapter (ft-in.)	42-8
Thickness of insulation, minimum, (in.)	3
Number of reactor closure head studs	58
Diameter of reactor closure head/studs, minimum shank (in.)	5-13/16
Outside diameter of flange (in.)	184
Inside diameter of flange (in.)	149
Outside diameter at shell (in.)	172-3/4
Inside diameter at shell (in.)	157
Inlet nozzle inside diameter (in.)	27-1/2
Outlet nozzle inside diameter (in.)	29
Clad thickness, minimum (in.)	1/8
Lower head thickness, minimum (in.)	4-7/8
Vessel belt-line thickness, minimum (in.)	7-3/4
Closure head thickness (in.)	5-3/4

TABLE 5.4.1-1

REACTOR COOLANT PUMP DESIGN PARAMETERS

	Original	SGR/PUR
Design pressure (psig)	2485	
Design temperature (°F)	650[(a)]	
Overall height (ft)	26.93	
Seal water injection (gpm)	8	
Seal water return (gpm)	3	
Cooling water flow (gpm)	216	
Maximum continuous cooling water inlet temperature (°F)	105	
Total weight, dry (lb)	204,200	
Moment of inertia, maximum (lb-ft^2)		
Flywheel	70,000	
Motor	22,500	
Shaft	520	
Impeller	1,980	
Pump		
Design flow, (gpm)	103,400	100,000*
Developed head, (ft)	276	
NPSH required (ft)	Figure 5.4.1-2	
Suction temperature, thermal design (°F)	555.8	536.3
Discharge nozzle, inside diameter (in.)	27-1/2	
Suction nozzle, inside diameter (in.)	31	
Speed (rpm)	1184	1184.6
Water volume (ft^3)	50[(b)]	
Motor		
Type	Drip proof, squirrel cage induction, air cooled	
Power(hp)		
Hot reactor coolant	6700	7002
Cold reactor coolant	8870	8907
Voltage (volts)	@6600	
Phase	3	
Frequency (Hz)	60	
Insulation	Class B. thermalastic epoxy	
Current (amp)		
Starting	3000	6,600 volts
Normal input, hot reactor coolant		542±19
Normal input, cold reactor coolant		718±25

*Assumes 10% steam generator tube plugging.

Table 5.4.1-1 (Continued)

[a]Design temperature of pressure retaining parts of the pump assembly exposed to the reactor coolant and injection water on the high pressure side of the controlled leakage seal shall be that temperature determined for the parts for a reactor coolant loop temperature of 650 F.

[b]Composed of reactor coolant in the casing and of seal injection and cooling water in the thermal barrier.

TABLE 5.4.1-2

REACTOR COOLANT PUMP QUALITY ASSURANCE PROGRAM

	RT*	UT*	PT*	MT*
Castings	Yes		Yes	
Forgings				
Main shaft		Yes	Yes	
Main Studs		Yes		Yes
Plate				
Flywheel		Yes	Yes**	Yes**
Weldments				
Circumferential	Yes		Yes	
Instrument connections			Yes	

*RT - Radiographic

UT - Ultrasonic

PT - Dye penetrant

MT - Magnetic particle

** Of machined bores, keyways, and drilled holes (either PT or MT).

TABLE 5.4.2-1

STEAM GENERATOR DESIGN DATA

Design pressure, reactor coolant side, psig	2485
Design pressure, steam side, psig	1185
Design temperature, reactor coolant side, F	650
Design temperature, steam side, F	600
Total heat transfer surface area, $ft.^2$	75,200
Maximum moisture carryover, wt. percent	0.10
Overall height, ft.-in.	67-9
Number of U-tubes	6307
U-tube nominal diameter, in.	0.688
Tube wall nominal thickness, in.	0.040
Number of manways	4
Inside diameter of manways, in.	16
Number of inspection ports/handholes	18/6
Fouling factor ($°F\text{-}hr\text{-}ft^2/BTU$)	
Best Estimate	0.00006
Thermal Design	0.00011

TABLE 5.4.2-2

REPLACEMENT STEAM GENERATOR MANUFACTURING QUALITY ASSURANCE PROGRAM

	RT	UT	PT	MT	ET	VT	P
Tubesheet							
1. Forging		X		X			
2. Cladding		X	X				
Channelhead							
1. Forging		X		X			
2. Cladding		X					
3. Primary Nozzle Safe End Forging		X	X				
Shell							
1. Pressure Plate		X					
Tubes		X			X		X
Transition Cone, and Elliptical Head							
1. Forging		X		X-			
Weldments							
1. Shell, Circumferential, Longitudinal (including channelhead to tubesheet)	X			X		X	
2. Shell, Instrument Penetrations				X		X	
3. Feedwater Nozzle to Shell	X			X		X	
4. Tube to Tubesheet Cladding (1)			X			X	
5. Primary Nozzle Weld Buildup		X	X				
6. Primary Nozzle Buildup to Safe End	X	X	X				
7. Temporary attachments after removal (2)			X	X		X	
8. Post Hydrotest (all accessible exterior weldments)				X		X	

Notes:
(1) Tube to tubesheet welds are also helium leak checked and must be shown to be leaktight
(2) Either MT or PT
RT - Radiograph (X-ray)
UT - Ultrasonic
PT - Dye Penetrant
MT - Mag Particle
ET - Eddy Current
VT - Visual Exam
P - Profilometry

TABLE 5.4.3-1

REACTOR COOLANT PIPING DESIGN PARAMETERS

Reactor inlet piping, inside diameter (in.)	27-1/2
Reactor inlet piping, nominal wall thickness (in.)	2.32
Reactor outlet piping, inside diameter (in.)	29
Reactor outlet piping, nominal wall thickness (in.)	2.45
Coolant pump suction piping, inside diameter (in.)	31
Coolant pump suction piping, nominal wall thickness (in.)	2.60
Pressurizer surge line piping, nominal pipe size (in.)	14
Pressurizer surge line piping, nominal wall thickness (in.)	1.406
Reactor Coolant Loop Piping	
Design/operating pressure (psig)	2485/2235
Design temperature (F)	650
Pressurizer Surge Line	
Design pressure (psig)	2485
Design temperature (F)	680
Pressurizer Safety Valve Inlet Line	
Design pressure (psig)	2485
Design temperature (F)	680
Pressurizer (Power Operated) Relief Valve Inlet Line	
Design pressure (psig)	2485
Design temperature (F)	680

TABLE 5.4.3-2

SAFETY CLASS REACTOR COOLANT PIPING QUALITY ASSURANCE PROGRAM

	RT*	UT*	PT*
Fittings (Castings)	yes		yes
Fittings and Pipe (Forgings)		yes	yes
Weldments			
Circumferential	yes		yes
Nozzle to runpipe (except no RT for nozzles less than 6 inches)	yes		yes
Instrument connections			yes

* RT - Radiographic

UT - Ultrasonic

PT - Dye Penetrant

TABLE 5.4.7-1

DESIGN BASES FOR RESIDUAL HEAT REMOVAL SYSTEM OPERATION

Reactor coolant system initial pressure (psig)	425*
Reactor coolant system initial temperature (F)	350
Reactor coolant system temperature at end of cooldown (F)	140

*Indicated RCS pressure 363 psig

TABLE 5.4.7-1A

INPUTS FOR RCS COOLDOWN TIMES

	Two Train Cooldown	Single Train with Offsite Power Available	Natural Circulation Cooldown with single train and LOOP
Reactor Power Level (MWt)	2958	2958	2958
RHR Startup Time from Reactor Shutdown (hr)	4	16	6
CCW Max Supply Temperature (°F)	125	125	125
RCP's in service	3 RCP's to 200°F, 1 RCP to 160°F	1 RCP	None
Spent Fuel Pool Heat Load(1) Included in CCW Aux Heat Load	27.0	27.0	27.0
Temperature at end of cooldown (°F)	140	200	200

(1) 27.0 MBTU/hr bounds the total listed in Table 9.1.3-2 for Maximum Heat Load in Normal Operations

TABLE 5.4.7-2

RESIDUAL HEAT REMOVAL SYSTEM COMPONENT DATA

Residual Heat Removal Pumps	
Number	2
Design pressure (psig)	600
Design temperature (F)	400
Design flow (gpm)	3750
Design head (ft)	240
NPSH required at 3750 gpm (ft)	16
Power (hp)	300

Residual Heat Exchangers	
Number	2
Design heat removal capacity (Btu/hr)	30.3×10^6
Estimated UA (Btu/hr F_{LMTD})	1.6×10^6

	Tube Side	Shell Side
Design pressure (psig)	600	171
Design temperature (F)	400	200
Design flow (lb/hr)	1.86×10^6	2.8×10^6
Inlet temperature (F)	139	105
Outlet temperature (F)	123	116
Material	Austenitic stainless steel	Carbon steel
Fluid	Reactor coolant	Component cooling water

TABLE 5.4.7-3 FAILURE MODE AND EFFECTS ANALYSIS - RESIDUAL HEAT REMOVAL SYSTEM ACTIVE COMPONENTS - PLANT COOLDOWN OPERATION

Component	Failure Mode	Effect on System Operation[i]	Failure Detection Method[ii]	Remarks
1. Motor operated gate valve 8701A (8701B analogous)	a. Fails to open on demand (open manual mode CB switch selection)	Failure blocks reactor coolant flow from hot let of RC loop 1 through train "A" of RHRS. Fault reduces redundancy of RHR coolant trains provided. No effect on safety for system operation. Plant cooldown requirements will be met by reactor coolant flow from hot leg of RC loop 3 flowing through train "B" of RHRS, however, time required to reduce RCS temperature will be extended.	Valve position indication (closed to open position change) at CB; RC loop 1 hot leg pressure indication (PI-402) at CB; RHR train "A" discharge flow indication (FI-605A) and low flow alarm at CB; and RHR pump discharge pressure indication (PI-600A) at CB.	1. Valve is electrically interlocked with RWST to RHR suction line isolation valve 8809A with RHR to charging pump suction line isolation valve 8706A and with a "prevent-open" pressure interlock (PT-402) of RC loop 1 hot leg. The valve cannot be opened remotely from the CB if one of the isolation valves is open or if RC loop pressure exceeds 425 psig. 2. If both trains of RHRS are unavailable for plant cooldown due to multiple component failures, the Auxiliary Feedwater System and SG power operated relief valves can be used to perform the safety function of removing residual heat.
2. Motor operated gate valve 8702A (8702B analogous)	Same failure modes as those stated in item 1.	Same effect on system operation as that stated for item 1.	Same methods of detection as those stated for item 1, except for pressure indication (PI-403).	Same remarks as those stated for item 1, except for pressure interlock (PT-403) control.
3. RHR pump A, (RHR pump B analogous)	Fails to deliver working fluid.	Failure results in loss of reactor coolant flow from hot leg of RC loop 1 through train "A" of RHRS. Fault reduces redundancy of RHR coolant trains provided. No effect on safety for system operation. Plant cooldown requirements will be met by reactor coolant flow from hot leg of RC loop 3 flowing through train "B" of RHRS, however, time required to reduce RCS temperature will be extended.	Open pump switchgear circuit breaker indication at CB; circuit breaker close position monitor light for group monitoring of components at CB; common breaker trip alarm at CB; RC loop 1 hot leg pressure indication (PI-402) at CB; RHR train "A" discharge flow indication (FI-605A) and low flow alarm at CB; and pump discharge pressure indication (PI-600A) at CB.	The RHRS shares components with the ECCS. Pumps are tested as part of the ECCS testing program (see Section 6.3.4). Pump failure may also be detected during ECCS testing.

TABLE 5.4.7-3 FAILURE MODE AND EFFECTS ANALYSIS - RESIDUAL HEAT REMOVAL SYSTEM ACTIVE COMPONENTS - PLANT COOLDOWN OPERATION

Component	Failure Mode	Effect on System Operation[i]	Failure Detection Method[ii]	Remarks
4. Motor operated globe valve FCV-602A (FCV-602B analogous)	a. Fails to open on demand (open manual mode CB switch selection)	Failure blocks miniflow line to suction of RHR pump “A” during cooldown operation of checking boron concentration level of coolant in train “A” of RHRS. No effect on safety for system operation. Plant cooldown requirements will be met by reactor coolant flow from hot leg for RC loop 3 flowing through train “B” of RHRS, however, time required to reduce RCS temperature will be extended.	Valve position indication (closed to open position change) at CB.	Valve is automatically controlled to open when pump discharge is less than approximately 750 gpm and close when the discharge exceeds approximately 1400 gpm. The valve protects the pump from deadheading during ECCS operation. CB switch set to “Auto” position for automatic control of valve positioning.
	b. Fails to close on demand (“Auto” mode CB switch selection)	Failure allows for a portion of RHR heat exchanger “A” discharge flow to be bypassed to suction of RHR pump “A”. RHRS train “A” is degraded for the regulation of coolant temperature by RHR heat exchanger “A”. No effect on safety for system operation. Cooldown for RCS within established specification cooldown rate may be accomplished through operator action of adjusting throttle valves.	Valve position indication (open to closed position change) and RHRS train “A” discharge flow indication (FI-605A) at CB.	
5. Air diaphragm operated butterfly valve FCV-605A (FCV-605B analogous)	a. Fails to open on demand (“Auto” mode CB switch selection)	Failure prevents coolant discharged from RHR pump “A” from bypassing RHR heat exchanger “A” resulting in mixed mean temperature of coolant flow to RCS being low. RHRS train “A” is degraded for the regulation of controlling temperature of coolant. No effect on safety for system operation. Cooldown of RCS within established specifications rate may be accomplished through operator action of throttling flow control valve HCV-603A and controlling cooldown with redundant RHRS train “B”.	RHR pump “A” discharge flow temperature and RHRS train “A” discharge to RCS cold leg flow temperature recording (TR-612) at CB; and RHRS train “A” discharge to RCS cold leg flow indication (FI-605A)	Valve is designed to fail “closed”. Valve is normally “closed” to align RHRS for ECCS operation hcfduring plant power operation and load follow.

TABLE 5.4.7-3 FAILURE MODE AND EFFECTS ANALYSIS - RESIDUAL HEAT REMOVAL SYSTEM ACTIVE COMPONENTS - PLANT COOLDOWN OPERATION

Component	Failure Mode	Effect on System Operation[i]	Failure Detection Method[ii]	Remarks
	b. Fails to close on demand (“Auto” mode CB switch selection)	Failure allows coolant discharged from RHR pump “A” to bypass RHR heat exchanger “A” resulting in mixed mean temperature of coolant flow to RCS being high. RHRS train “A” is degraded for the regulation of controlling temperature of coolant. No effect on safety for system operation. Cooldown of RCS within established specification rate may be accomplished through operator action of throttling flow control valve HCV-603A and controlling cooldown with redundant RHRS train “B”, however, cooldown time will be extended.	Same methods of detection as those stated in item 5.a.	
6. Air diaphragm operated butterfly valve HCV-603A (HCV-603B) analogous)	a. Fails to close on demand for flow reduction	Failure prevents control of coolant discharge flow from RHR heat exchanger “A” resulting in loss of mixed mean temperature coolant flow adjustment to RCS. No effect on safety for system operation. Cooldown of RCS within established specification rate may be accomplished by operator action of controlling cooldown with redundant RHRS train “B”.	Same methods of detection as those stated for item 5. In addition, monitor light and alarm (valve closed) for group monitoring of components at CB.	Valve is designed to fail “open”. Valve is normally “open” to align RHRS for ECCS operation during plant power operation and load follow.
	b. Fails to open on demand for increased flow	Same effect on system operation as that stated for item 6.a.	Same methods of detection as those stated for item 6.a.	
7. Manual globe valve 8720A (8720B analogous)	Fails closed	Failure blocks flow from train “A” of RHRS to CVCS letdown heat exchanger. Fault prevents (during the initial phase of plant cooldown) the adjustment of boron concentration level of coolant in lines of RHRS train “A” so that it equals the concentration level in the RCS using the RHR cleanup line to CVCS. No effect on safety for system operation. Operator can balance boron concentration levels by cracking open flow control valve HCV-603A to permit flow to cold leg of loop 1 of RCS.	CVCS letdown flow indication (FI-150) at CB.	Valve is normally “Closed” to align RHRS for ECCS operation during plant power operation and load follow.

TABLE 5.4.7-3 FAILURE MODE AND EFFECTS ANALYSIS - RESIDUAL HEAT REMOVAL SYSTEM ACTIVE COMPONENTS - PLANT COOLDOWN OPERATION

Component	Failure Mode	Effect on System Operation[i]	Failure Detection Method[ii]	Remarks
8. Air diaphragm operated globe valve HCV-142	Fails to open on demand	Failure blocks flow from trains "A" and "B" of RHRS to CVCS letdown heat exchanger. Fault prevents use of RHR cleanup line to CVCS for balancing boron concentration levels of RHR trains "A" and "B" with RCS during initial cooldown operation and later in plant cooldown for letdown flow. No effect on safety for system operation. Operator can balance boron concentration levels with similar actions, using pertinent flow control valve HCV-603A (HCV-603B), as stated for item 7. CVCS letdown flow can be used for purification if RHRS cleanup line is not available.	Valve position indication (degree of opening) at CB and CVCS letdown flow indication (FI-150) at CB.	1. Same remark as that stated above for Item 7. 2. Valve is a component of the CVCS that performs an RHR function during plant cooldown operation.
9. Motor operated gate valve 8809A (8809B analogous)	Fails to close on demand	No effect on safety for system operation. Plant cooldown requirements will be met by reactor coolant flow from hot leg loop 3 flowing through Train "B" of RHRS, however, time required to reduce RCS temperature will be extended.	Valve position indication (open to closed position change) at CB and valve (closed) monitor light and alarm at CB.	Valve is a component of the ECCS that performs an RHR function during plant cooldown. Valve is normally "open" to align RHRS for ECCS operation during plant power operation.

List of acronyms and abbreviations:

Auto	-	Automatic
CB	-	Control Board
CVCS	-	Chemical and volume control system
ECCS	-	Emergency core cooling system
RC	-	Reactor coolant
RCS	-	Reactor coolant system
RHR	-	Residual heat removal
RHRS	-	Residual heat removal system
RWST	-	Refueling water storage tank
SG	-	Steam generator

[i] See list at end of table for definition of acrynyms and abbreviations used.

[ii] As part of plant operation, periodic tests, surveillance inspections, and instrument calibrations are made to monitor equipment and performance. Failures may be detected during such monitoring of equipment, in addition to the detection methods used.

TABLE 5.4.10-1

PRESSURIZER DESIGN DATA

Design pressure	2485
Design Temperature (F)	680
Surge line nozzle diameter (in.)	14
Heatup rate of pressurizer using heaters only (F/hr)	55
Internal volume (ft^3)	1400

TABLE 5.4.10-2

REACTOR COOLANT SYSTEM DESIGN PRESSURE SETTINGS

	Psig
Hydrostatic test pressure	3107
Design pressure	2485
Safety valves (begin to open)	2485
High pressure reactor trip	2385
High pressure alarm	2310
Power operated relief valves	2335*
Pressurizer spray valves (full open)	2310
Pressurizer spray valves (begin to open)	2260
Proportional heaters (begin to operate)	2250
Operating pressure	2235
Proportional heaters (full operation)	2220
Backup heaters on	2210
Low pressure alarm	2210
Pressurizer power operated relief valve interlock	2000
Low pressure reactor trip (typical, but variable)	1960

*At 2335 psig, a pressure signal initiates actuation (opening) of these valves. Remote manual control is also provided.

TABLE 5.4.10-3

PRESSURIZER QUALITY ASSURANCE PROGRAM

	RT(a)	UT(a)	PT(a)	MT(a)
Heads				
Plates		Yes		
Cladding			Yes	
Shell				
Plates		Yes		
Cladding			Yes	
Heaters				
Tubing[b]		Yes	Yes	
Centering of element	Yes			
Nozzle (Forgings)		Yes	Yes[c]	Yes[c]
Weldments				
Shell, longitudinal	Yes			Yes
Shell, circumferential	Yes			Yes
Cladding			Yes	
Nozzle safe end	Yes		Yes	
Instrument connection			Yes	
Support skirt, longitudinal seam	Yes			Yes
Support skirt to lower head		Yes		Yes
Temporary attachments (after removal)				Yes
All external pressure boundary welds after shop hydrostatic test				Yes

(a) RT – Radiographic
UT – Ultrasonic
PT – Dye Penetrant
MT – Magnetic Particle

(b) Or a UT and ET

(c) MT or PT

TABLE 5.4.11-1

PRESSURIZER RELIEF TANK DESIGN DATA

Design pressure (psig)	100
Normal Operating pressure (psig)	3
Final operating pressure (psig)	50
Rupture disc release pressure (psig)	
Nominal	91
Range	86 to 100
Normal water volume (ft^3)	900
Normal gas volume (ft^3)	400
Design temperature (F)	340
Initial operating water temperature (F)	120
Final operating water temperature (F)	200
Total rupture disc relief capacity at 100 psig (lb/hr)	1.14×10^6
Cooling time required following maximum discharge approximately (hr)	
Spray feed and bleed	1
Utilizing RCDT heat exchanger	8

TABLE 5.4.11-2

TABLE VALVE DISCHARGE TO THE PRESSURIZER RELIEF TANK

Reactor Coolant System

3 Pressurizer safety valves

3 Pressurizer power operated relief valves

Residual Heat Removal System

2 Residual heat removal pump suction line from the Reactor Coolant System hot legs

Chemical and Volume Control System

1 Seal water return line

1 Letdown line

TABLE 5.4.12-1

REACTOR COOLANT SYSTEM VALVE DESIGN PARAMETERS

Design/normal operating pressure (psig)	2485/2235
Preoperational plant hydrotest (psig)	3107
Design temperature (F)	650

TABLE 5.4.12-2

REACTOR COOLANT SYSTEM VALVES NONDESTRUCTIVE

EXAMINATION PROGRAM

	RT[a]	UT[a]	PT[a]
Boundary Valves, Pressurizer Relief, and Safety Valves			
Castings (larger than 4 in.)	yes		yes
(2 inches to 4 in.)	yes[b]		yes
Forgings (larger than 4 in.)	(c)	(c)	yes
(2 inches to 4 in.)			yes

(a) RT – Radiographic
UT – Ultrasonic
PT – Dye Penetrant

(b) Weld ends only

(c) Either RT or UT

TABLE 5.4.12-3 RCS HIGH POINT VENT SYSTEM FAILURE MODES AND EFFECT ANALYSIS

No.	Components	Failure Mode	Effect on System	Method of Detection*	Remarks
1.	Solenoid Operated Valves 1RC-V280SB-1 (1RC-V281SA-1 analogous)	a. Fail Closed	Loss of ability to vent the reactor vessel head	Valve position indication in the Main Control Room	Parallel redundant isolation valve 1RC-V281SA-1 (1RC-V280SB-1) allows venting of the reactor vessel head.
		b. Fail Open	Inability to vent the pressurizer without also venting the reactor vessel head	Valve position indication in the Main Control Room	Redundant isolation valves to PRT (1RC-V285SB-1) and containment atmosphere (1RC-V284SA-1) preclude uncontrolled venting of the reactor vessel head.
2.	Solenoid Operated Valves 1RC-V282SB-1 (1RC-V283SA-1 analogous)	a. Fail Closed	Loss of ability to vent the pressurizer	Valve position indication in the Main Control Room	Parallel redundant isolation valve 1RC-V283SA-1 (1RC-V284SA-1) allows venting of the pressurizer.
		b. Fail Open	Inability to vent the reactor vessel head without also venting the pressurizer	Valve position indication in the Main Control Room	Redundant isolation valves to PRT (1RC-V285SB-1) and containment (1RC-V284SA-1) preclude uncontrolled venting of the pressurizer.
3.	Solenoid Operated Valve 1RC-V285SB-1	a. Fail Closed	Loss of ability to vent the reactor vessel head or pressurizer to PRT	Valve position indication in the Main Control Room	Alternate venting of reactor vessel head or pressurizer to the containment atmosphere is available via isolation valve 1RC-V284SA-1.
		b. Fail Open	Loss of ability to isolate system from the PRT	Valve position indication in the Main Control Room	Redundant isolation valves for the reactor vessel head (1RC-280SB-1, 1RC-V281SA-1) and pressurizer (1RC-V282SB-1, 1RC-V283SA-1) prevent uncontrolled venting to the PRT.
4.	Solenoid Operated Valve 1RC-V284SA-1	a. Fail Closed	Loss of ability to vent the reactor vessel head or the pressurizer to the containment atmosphere	Valve position indication in the Main Control Room	Alternate venting of reactor vessel head or pressurizer to the PRT is available via isolation valve 1RC-V285SB-1.

TABLE 5.4.12-3 RCS HIGH POINT VENT SYSTEM FAILURE MODES AND EFFECT ANALYSIS

No.	Components	Failure Mode	Effect on System	Method of Detection*	Remarks
		b. Fail Open	Loss of ability to isolate system from containment atmosphere	Valve position indication in the Main Control Room	Redundant isolation valves for the reactor vessel head (1RC-V280SB-1, 1RC-V281SA-1) and pressurizer (1RC-V282SB-1, 1RC-V283SA-1) prevent uncontrolled venting to the containment atmosphere.
5.	Flow Switch FS-5752-S	a. Fail to alarm on the presence of condensate/steam	Loss of ability to detect leakage into the system piping	Valve position indication in the Main Control Room	Valves 1RC-V284SA-1) and 1RC-V285SB-1 provide redundant isolation to prevent uncontrolled venting of RCS.
		b. Spurious alarm	Loss of ability to detect leakage into the vent system piping	Valve position indication in the Main Control Room	
6.	Position indicator for 1RC-V280SB-1 and 1RC-V281SA-1	False indication of valve position	Loss of ability to determine valve position in reactor vessel head vent path	Flow switch (FS-5752-S) alarm indicates valve is open	
7.	Position indicator for 1RC-V282SB-1 and 1RC-V283SA-1	False indication of valve position	Loss of ability to determine valve position in pressurizer vent path	Flow switch (FS-5752-S) alarm indicates valve is open	
8.	Position indicator for 1RC-V285SB-1	False indication of valve position	Loss of ability to determine valve position in the vent path to PRT	Flow switch FS-5752-S and PRT pressure and temperature can verify valve position	
9.	Position indicator for 1RC-V284SA-1	False indication of valve position	Loss of ability to determine valve position in the vent path to the containment atmosphere	Flow switch FS-5752-S and containment humidity/radiation levels can verify valve position	

*Periodic test, surveillance inspections and instrument calibrations are made to monitor equipment and performance. Failures may be detected during such monitoring of equipment in addition to detection methods noted.

TABLE 5.4.13-1

PRESSURIZER VALVES DESIGN PARAMETERS

Pressurizer Safety Valves	
Number	3
Minimum relieving capacity, ASME rated flow (lb/hr)	420,006
Set pressure (psig)	2485
Design temperature (F)	650
Fluid	Saturated steam
Transient Condition (F) : Non-Faulted Conditions	673
Faulted Conditions	682
Backpressure	
Normal (psig)	3 to 5
Expected during discharge (psig)	500
Throat Area (in^2)	3.64
Pressurizer Power Operated Relief Valves	
Number	3
Design pressure (psig)	2485
Design temperature (F)	650
Relieving capacity at 2350 psig, per valve (lb/hr)	210,000
Fluid	Saturated steam
Transient condition (F): Non-Faulted Conditions	673
Faulted Conditions	682
Throat Area (in^2)	2.9
Pressurizer Spray Valves	
Number	2
Design Pressure, psig	2485
Design Temperature, F	650
Design Flow, for valves full open, each, gpm	350

FIGURE	TITLE
5.1.1-1	REACTOR COOLANT SYSTEM PROCESS FLOW DIAGRAM
5.1.2-1	REFER TO FSAR TABLE 1.6-3 FOR DESIGN DOCUMENT INCORPORATED BY REFERENCE
5.1.2-2	REFER TO FSAR TABLE 1.6-3 FOR DESIGN DOCUMENT INCORPORATED BY REFERENCE
5.1.2-3	DELETED BY AMENDMENT NO. 48
5.1.3-1	REFER TO FSAR TABLE 1.6-3 FOR DESIGN DOCUMENT INCORPORATED BY REFERENCE
5.3.1-1	IDENTIFICATION AND LOCATION OF BELTLINE REGION MATERIAL FOR THE SHEARON HARRIS REACTOR VESSEL
5.3.1-2	DELETED BY AMENDMENT NO. 15
5.3.1-3	IRRADIATION SURVEILLANCE TEST CAPSULE LOCATION
5.3.3-1	REACTOR VESSEL
5.4.1-1	REACTOR COOLANT PUMP
5.4.1-2	REACTOR COOLANT PUMP ESTIMATED HOT PERFORMANCE CHARACTERISTICS
5.4.2-1	DELTA 75 FEEDRING STEAM GENERATOR
5.4.7-1	REFER TO FSAR TABLE 1.6-3 FOR DESIGN DOCUMENT INCORPORATED BY REFERENCE
5.4.7-2	PROCESS FLOW DIAGRAM
5.4.7-3	NORMAL RESIDUAL HEAT REMOVAL COOLDOWN
5.4.7-4	SINGLE RESIDUAL HEAT REMOVAL TRAIN COOLDOWN (LOSS OF OFFSITE POWER)
5.4.10-1	PRESSURIZER
5.4.11-1	PRESSURIZER RELIEF TANK
5.4.12-1	REACTOR COOLANT SYSTEM VENTS SCHEMATIC DIAGRAM
5.4.13-1	PRESSURIZER SAFETY VALVE
5.4.13-2	PRESSURIZER POWER OPERATED RELIEF VALVE
5.4.13-3	STEAM GENERATOR SAFETY RELIEF VALVE
5.4.13-4	STEAM GENERATOR POWER OPERATED RELIEF VALVE
5.4.14-1	REACTOR VESSEL SUPPORTS 5-xiv
5.4.14-2	STEAM GENERATOR SUPPORTS
5.4.14-3	REACTOR COOLANT PUMP SUPPORTS

FIGURE	TITLE
5.4.14-4	TYPICAL PRESSURIZER SUPPORTS
5.4.14-5	DELETED BY AMENDMENT NO. 40
5.4.14-6	DELETED BY AMENDMENT NO. 40
5.4.14-7	DELETED BY AMENDMENT NO. 40

FIGURE 5.1.1-1

REACTOR COOLANT SYSTEM PROCESS FLOW DIAGRAM

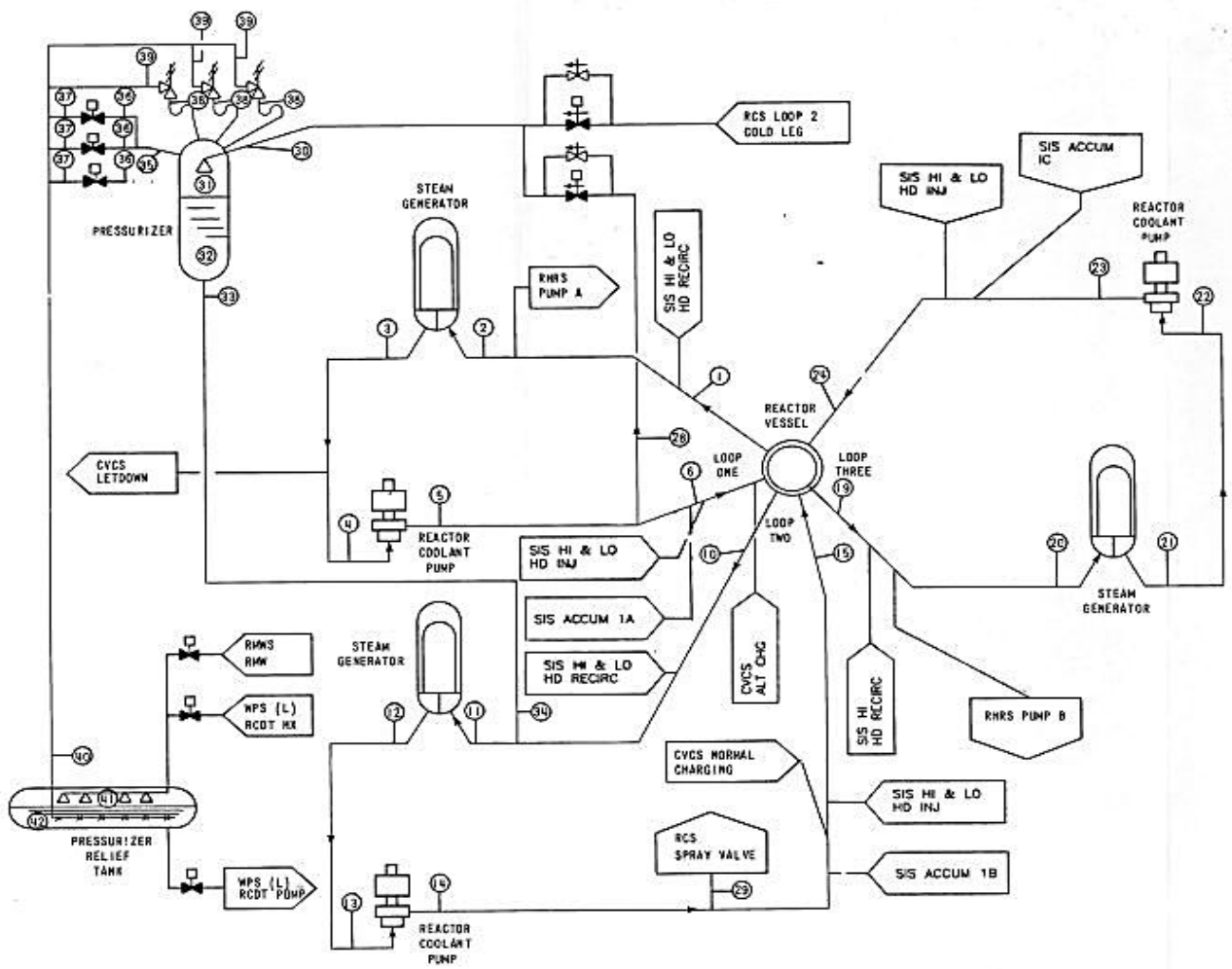

NOTES TO FIGURE 5.1.1-1

MODE: TYPICAL STEADY STATE FULL POWER OPERATION

LOCATION	FLUID	PRESSURE (psig)	TEMPERATURE (°F)	FLOW[3] (gpm)
1	Reactor Coolant	2243.9	620.2	114,856
2	Reactor Coolant	2241.8	620.2	114,856
3	Reactor Coolant	2207.8	557.2	102,200
4	Reactor Coolant	2207.0	557.2	102,200
5	Reactor Coolant	2287.5	557.4	102,200
6	Reactor Coolant	2283.9	557.4	102,200
10-15	Reactor Coolant	See Loop #1 Specifications		
19-24	Reactor Coolant	See Loop #1 Specifications		
28	Reactor Coolant	2287.5	557.4	1
29	Reactor Coolant	2287.5	557.4	1
30	Reactor Coolant	2235	652.7	2
31	Steam	2235	652.7	-
32	Reactor Coolant	2235	652.7	-
33	Reactor Coolant	2241.4	652.7	2.5
34	Reactor Coolant	2243.86	620.2	2.5
35	Steam	2235	652.7	0
36	Reactor Coolant	2235	<652..7	0
37	N_2	3.0	120	0
38	Reactor Coolant	2235	<652.7	0
39	N_2	3.0	120	0
40	N_2	3.0	120	0
41	N_2	3.0	120	-
42	PRT Water	3.0	120	-

COMMENTS:

(A) Letdown and charging flows are small and are assumed to be distributed over all loops. They are not included in the overall balance.
(B) Continuous pressurizer spray flow is not included in the overall balance.

---

(1) Deleted by Amendment No. 45

(2) Deleted by Amendment No. 45

(3) Loop flows are best estimate values based on T_{avg} at 588.8°F. BEF does not vary significantly for the T_{avg} range of 572°F – 588.8°F.

FIGURE 5.3.1-1

IDENTIFICATION AND LOCATION OF BELTLINE REGION MATERIAL FOR THE SHEARON HARRIS REACTOR VESSEL

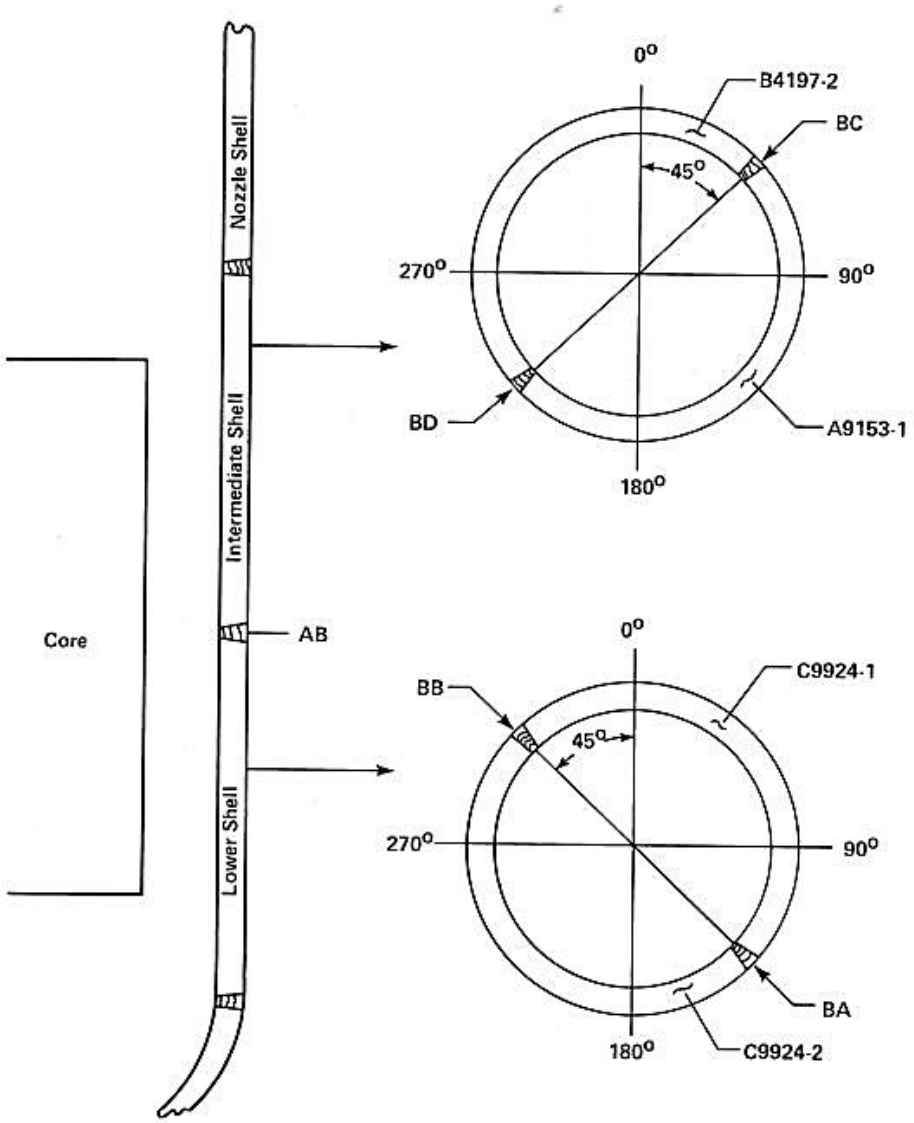

FIGURE 5.3.1-3

IRRADIATION SURVEILLANCE TEST CAPSULE LOCATION

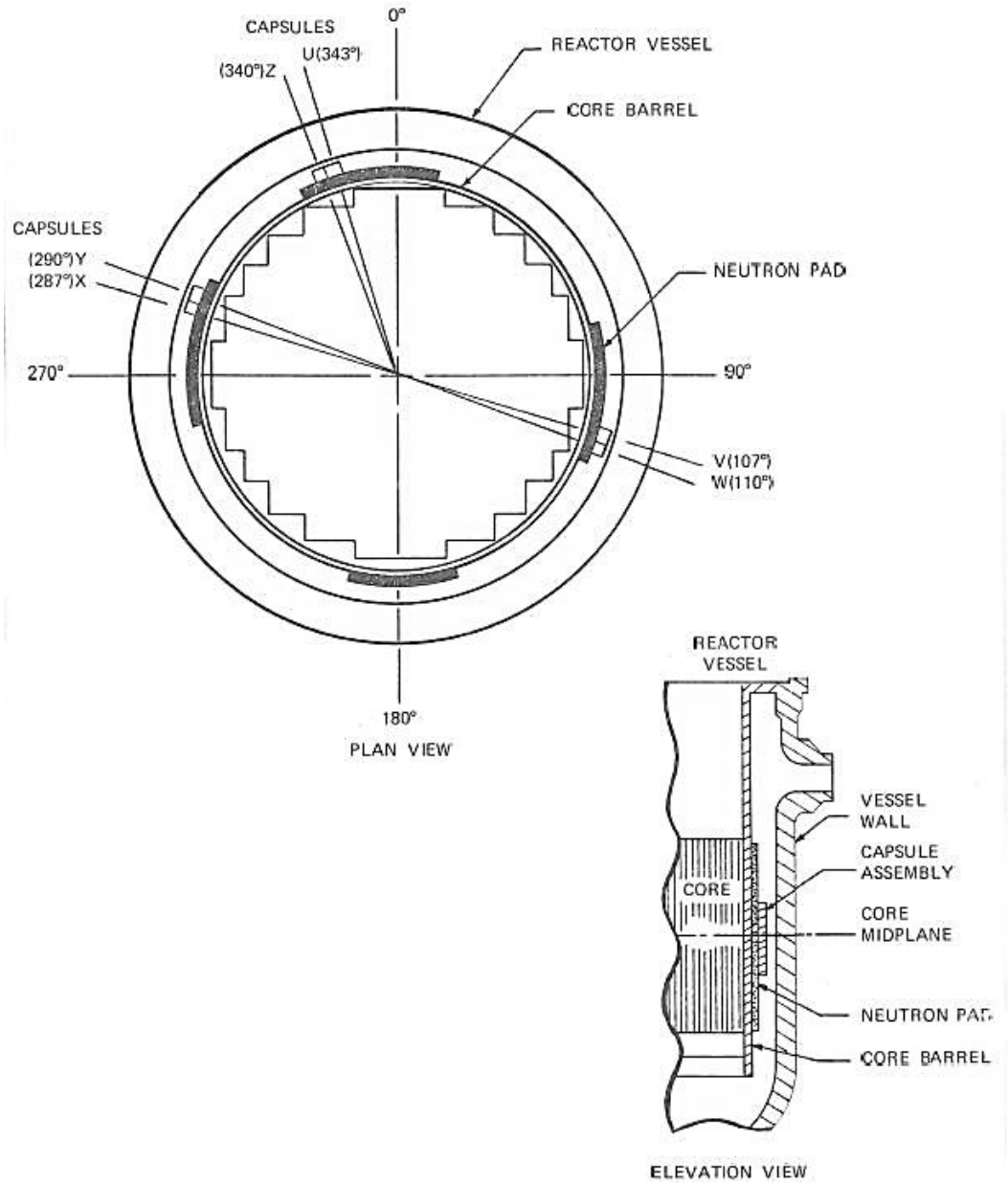

FIGURE 5.3.3-1

REACTOR VESSEL

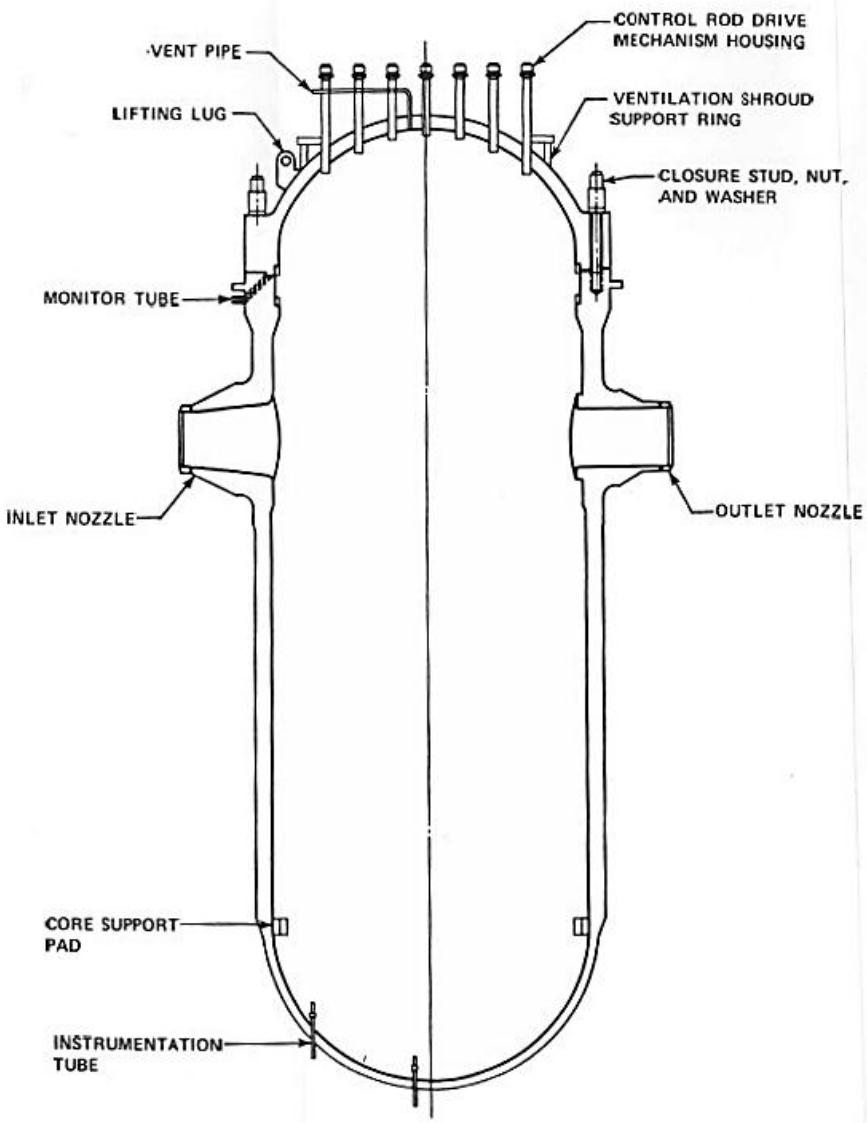

FIGURE 5.4.1-1

REACTOR COOLANT PUMP

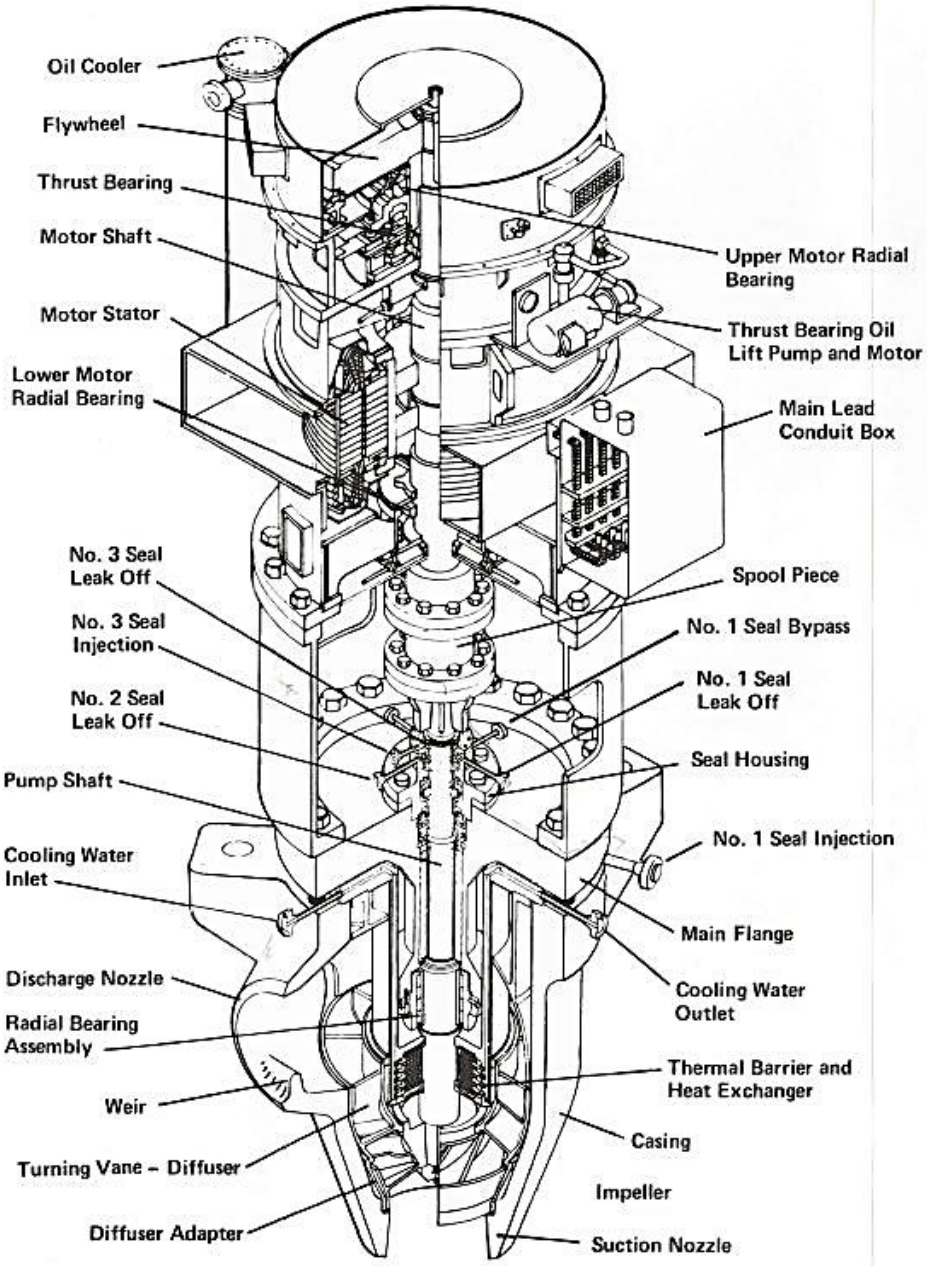

FIGURE 5.4.1-2

REACTOR COOLANT PUMP ESTIMATED
HOT PERFORMANCE CHARACTERISTICS

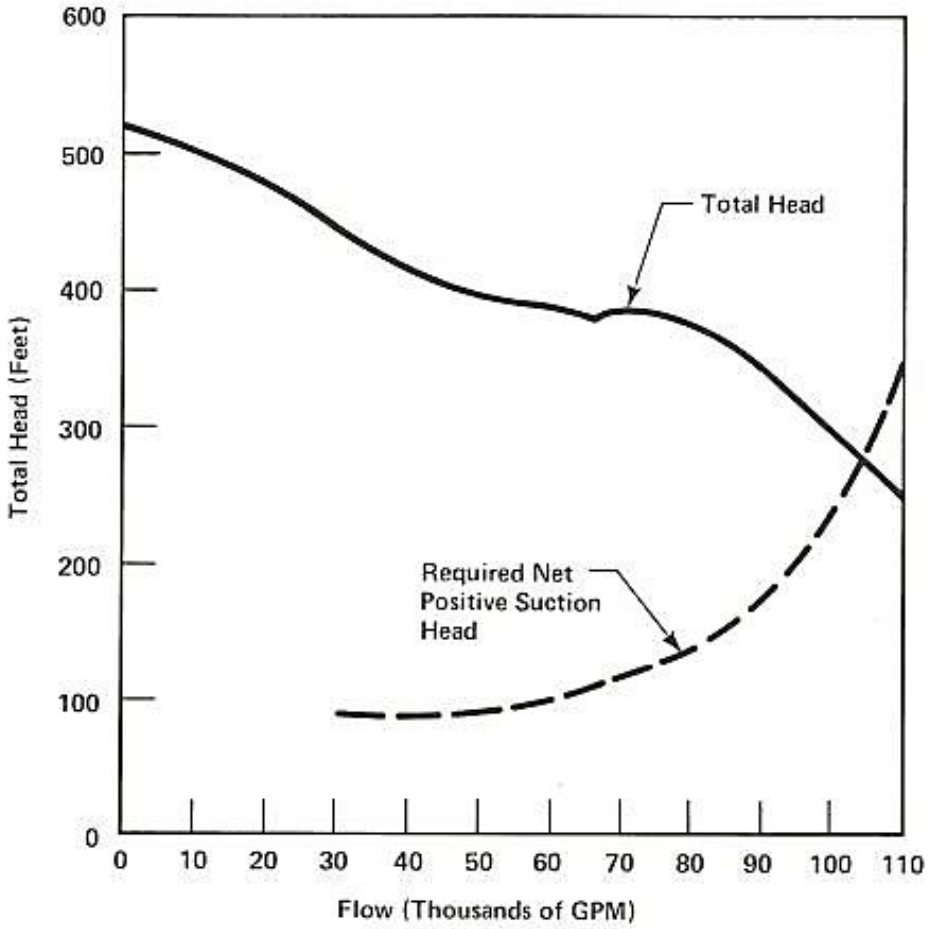

FIGURE 5.4.2-1

STEAM GENERATOR
DELTA 75 FEEDRING STEAM GENERATOR

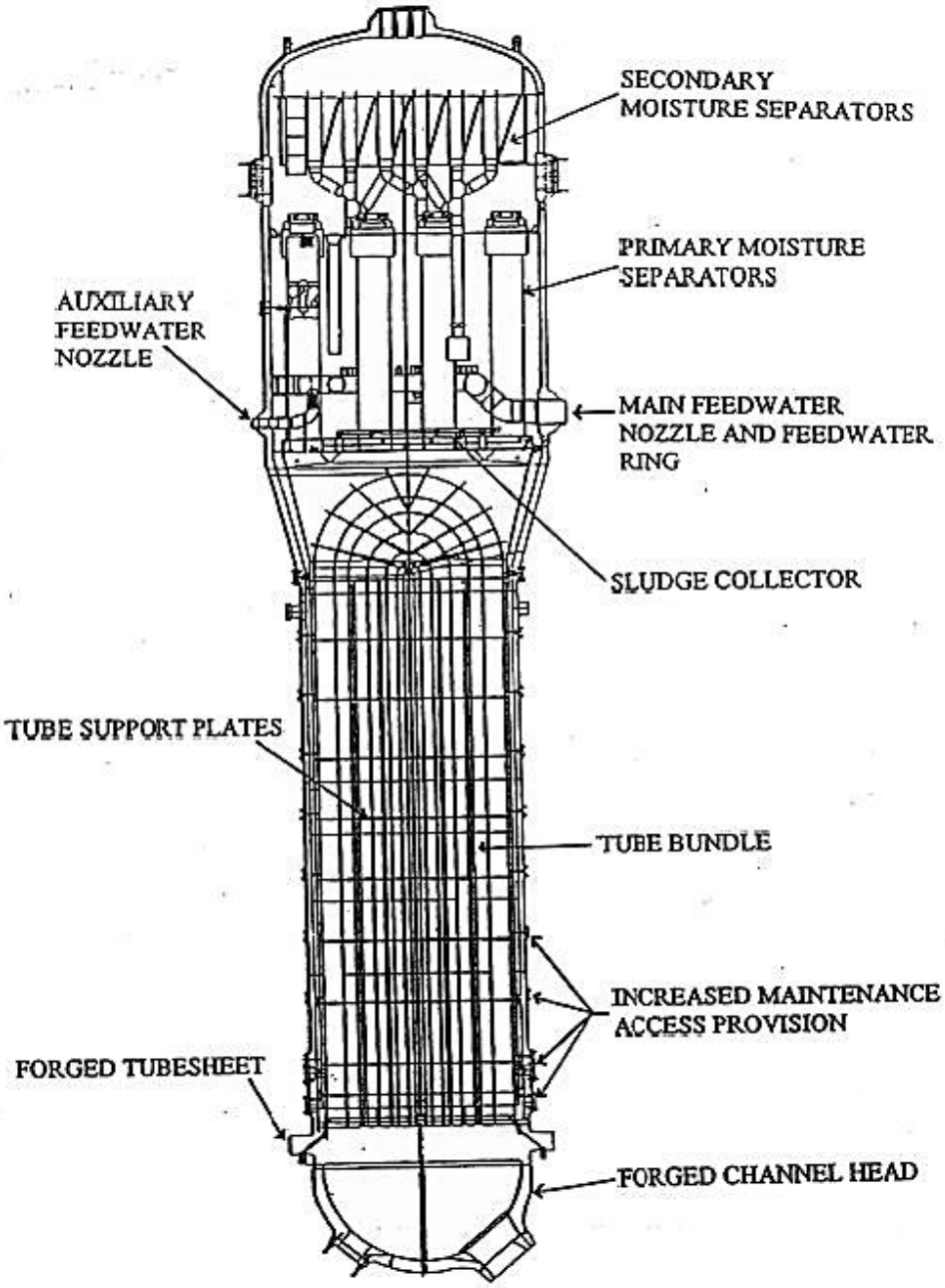

FIGURE 5.4.7-2

PROCESS FLOW DIAGRAM

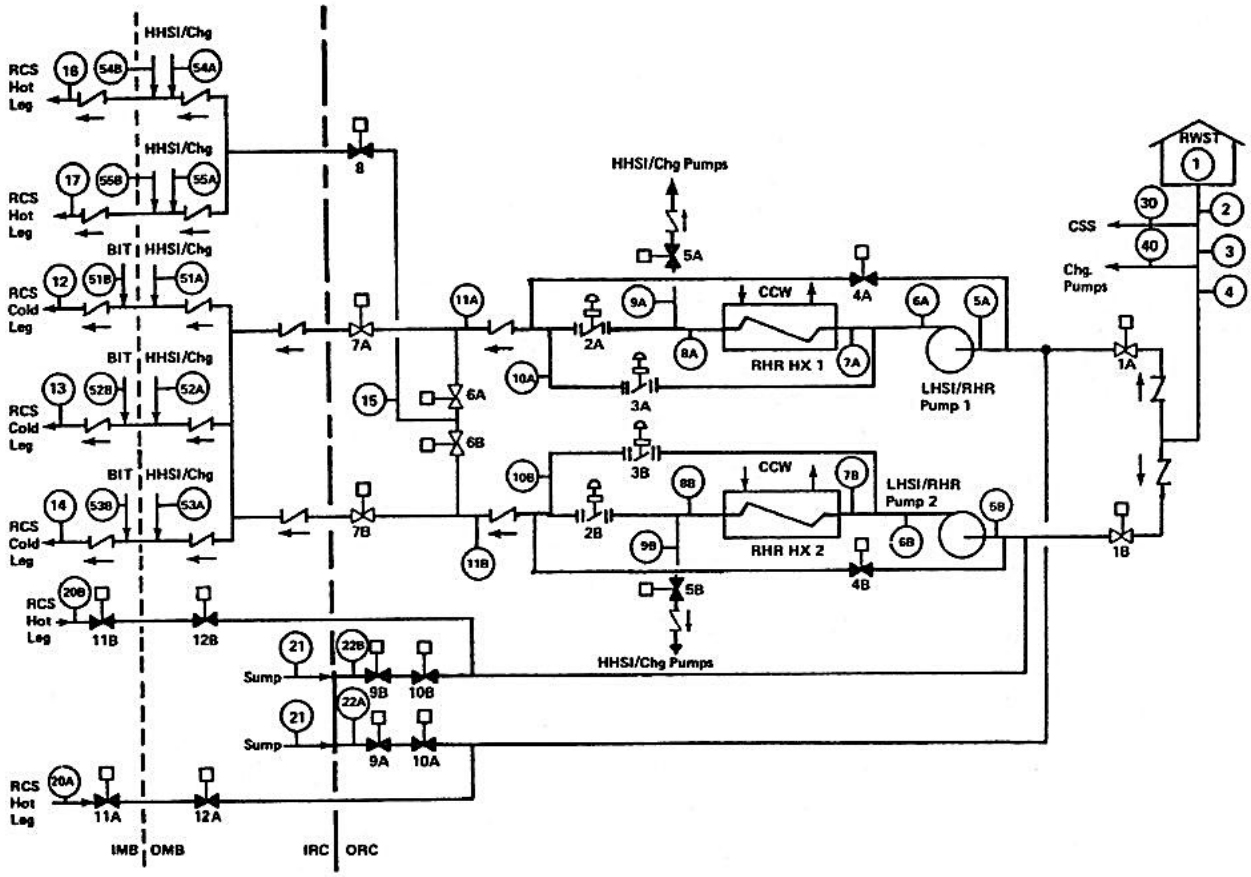

NOTES TO FIGURE 5.4.7-2 (Sheet 1)

MODES OF OPERATION

MODE A - INITIATION OF RHR OPERATION

When the reactor coolant temperature and pressure are reduced to approximately 350 F and 360 psig approximately four hours after reactor shutdown. the second phase of plant cooldown starts with the RHRS being placed in operation . Before starting the pumps. the inlet isolation valves are opened. the heat exchanger flow control valves are set a minimum flow. and the outlet valves are verified open. The automatic recirculation miniflow valves are open and remain so until the pump flow exceeds 1402 gpm at which time they close. Should the pump flow drop below 746 gpm. the miniflow valves open automatically .

Startup of the RHRS includes a warmup period during which time reactor coolant flow through the heat exchangers is limited to minimize thermal shock on the RCS . The rate of heat removal from the reactor coolant is controlled manually by regulating the reactor coolant flow through the residual heat exchangers . The total flow is regulated automatically by control valves in the heat exchanger bypass line to maintain a constant total flow . The cooldown rate is limited to 50 F/hr based on equipment stress limits and a 120 F maximum component cooling water temperature .

During this initial phase of RHR operation. one reactor coolant pump is maintained in operation . This results in a slight RHR return flow imbalance between the three RCS cold lets due to their different operating pressures .

MODE B - END CONDITIONS OF A NORMAL COOLDOWN

This situation characterizes most of the ~RHRS operation. As the reactor coolant temperature decreases, the flow through the residual heat exchanger is increased until all of the flow is directed through the heat exchanger to obtain maximum cooling. The process flow conditions are for the end of cooldown. Reactor coolant pump operation has also been terminated at this time, with all RCS cold legs now in equilibrium.

NOTE: For the safeguards functions performed by the RHRS refer to Section 6.3, ECCS.

NOTES TO FIGURE 5.4.7-2 (Sheet 3)

VALVE ALIGNMENT CHART

VALVE NO.	OPERATIONAL MODE	
	A	B
1A	C	C
1B	C	C
2A	P	O
2B	P	O
3A	P	C
3B	P	C
4A	C	C
4B	C	C
5A	C	C
5B	C	C
6A	O	O
6B	O	O
7A	O	O
7B	O	O
8	C	C
9A	C	C
9B	C	C
10A	C	C
10B	C	C
11A	O	O
11B	O	O
12A	O	O
12B	O	O

O = OPEN

C = CLOSED

P = PARTIALLY OPEN

NOTES TO FIGURE 5.4.7-2 (Sheet 4)

MODE A – INITIATION OF RHR OPERATION

LOCATION	FLUID	PRESSURE (psig)	TEMPERATURE (F)	FLOW (gpm) (1)
20A	Reactor Coolant	400	350	3000
20B	Reactor Coolant	400	350	3000
5A	Reactor Coolant	417	350	3000
5B	Reactor Coolant	417	350	3000
6A	Reactor Coolant	523	350	3000
6B	Reactor Coolant	523	350	3000
7A	Reactor Coolant	522	350	1000
7B	Reactor Coolant	522	350	1000
8A	Reactor Coolant	518	150	1000
8B	Reactor Coolant	518	150	1000
9A	Reactor Coolant	518	150	0
9B	Reactor Coolant	518	150	0
10A	Reactor Coolant	490	350	2000
10B	Reactor Coolant	490	350	2000
11A	Reactor Coolant	487	240	3000
11B	Reactor Coolant	487	240	3000
12	Reactor Coolant	403(2)	240	2000(2)
13	Reactor Coolant	418(2)	240	2000(2)
14	Reactor Coolant	403(2)	240	2000(2)

(1) At reference conditions 350F and 425 psig. Actual flow is less than design flow (3570 gpm) due to high system resistance, but RCS cooldown is still achievable within system design bases.

(2) Actual flow to Loop 2 will be slightly less than that to the other loops. This is a result of operating reactor coolant pump #2 during this phase of RHR operation.

NOTES TO FIGURE 5.4.7-2 (Sheet 5)

MODE B – END CONDITIONS OF A NORMAL COOLDOWN

LOCATION	FLUID	PRESSURE (psig)	TEMPERATURE (F)	FLOW (gpm) (1)
20A	Reactor Coolant	0(2)	140	3000
20B	Reactor Coolant	0(2)	140	3000
5A	Reactor Coolant	19	140	3000
5B	Reactor Coolant	19	140	3000
6A	Reactor Coolant	138	140	3000
6B	Reactor Coolant	138	140	3000
7A	Reactor Coolant	137	140	3000
7B	Reactor Coolant	137	140	3000
8A	Reactor Coolant	132	120	3000
8B	Reactor Coolant	132	120	3000
9A	Reactor Coolant	132	120	0
9B	Reactor Coolant	132	120	0
10A	Reactor Coolant	88	120	0
10B	Reactor Coolant	88	120	0
11A	Reactor Coolant	85	120	3000
11B	Reactor Coolant	85	120	3000
12	Reactor Coolant	0	120	2000
13	Reactor Coolant	0	120	2000
14	Reactor Coolant	0	120	2000

(1) At reference conditions 140F and 0 psig. Actual flow is less than design flow (3570 gpm) due to high system resistance, but RCS cooldown is still achievable within system design bases.

(2) The RCS is assumed to be depressurized, with the water level drained to the centerline of the reactor coolant piping.

FIGURE 5.4.7-3

NORMAL RESIDUAL HEAT REMOVAL COOLDOWN

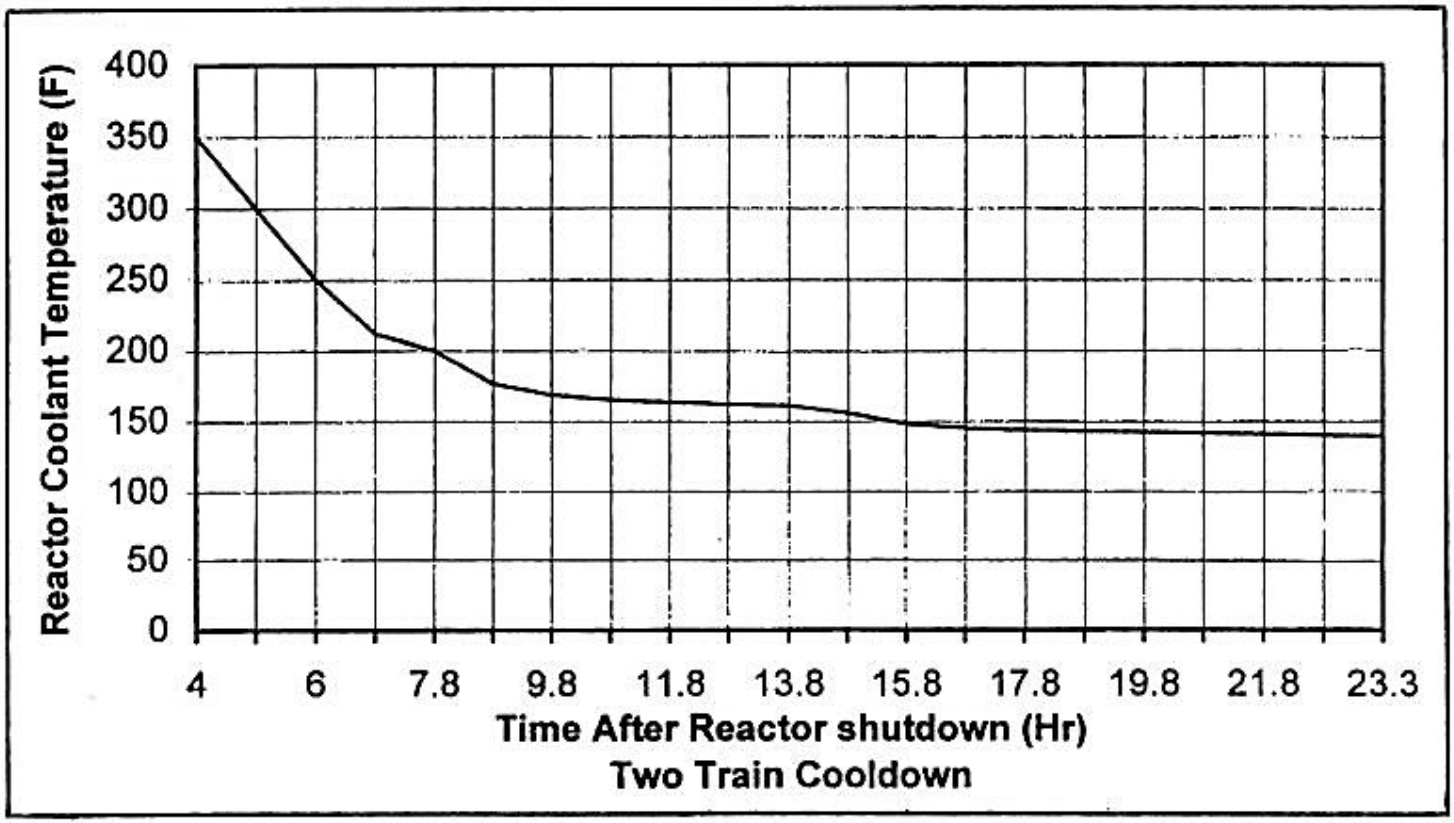

FIGURE 5.4.7-4

SINGLE RESIDUAL HEAT REMOVAL TRAIN COOLDOWN
(LOSS OF OFFSITE POWER)

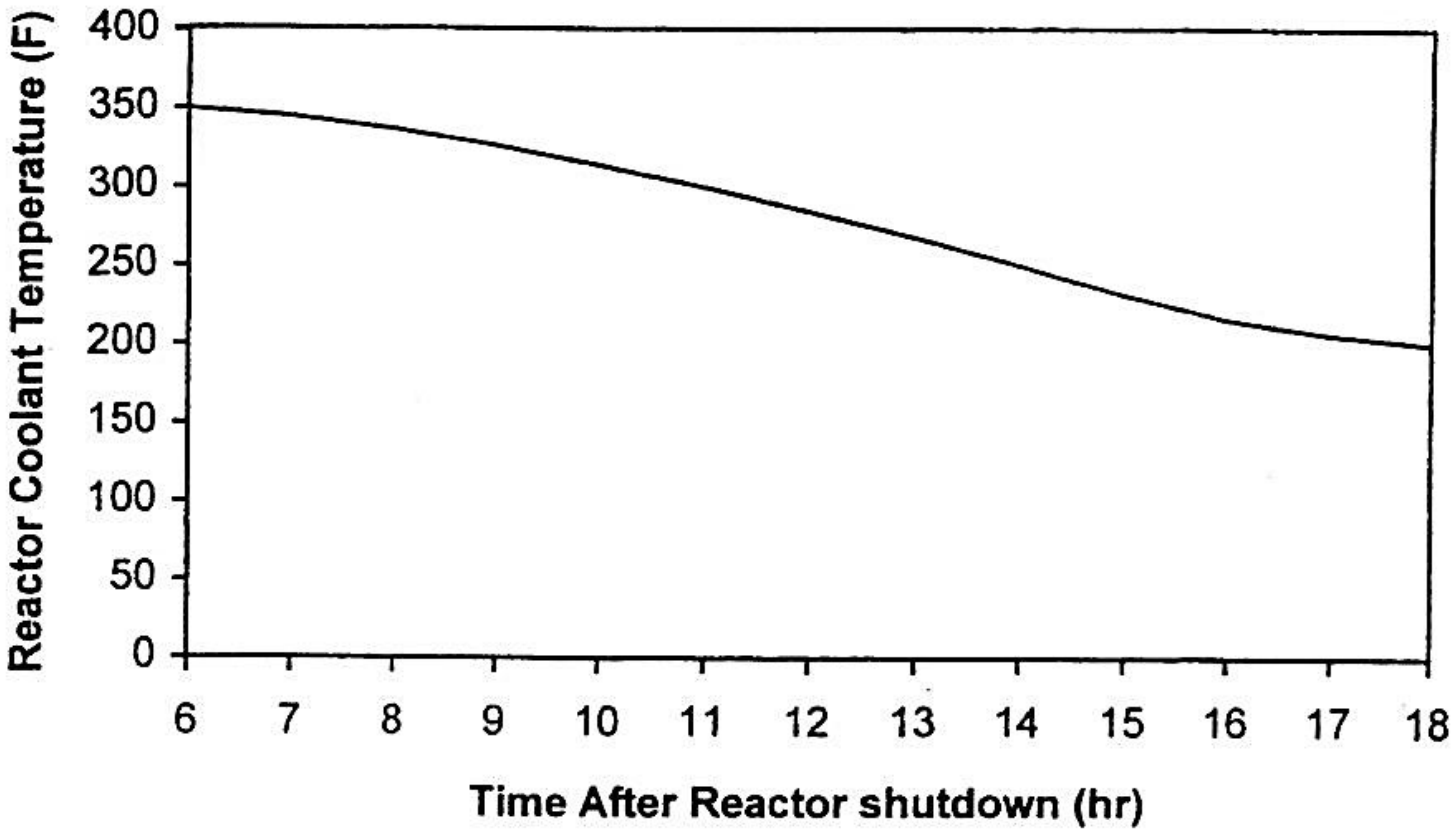

FIGURE 5.4.10-1

PRESSURIZER

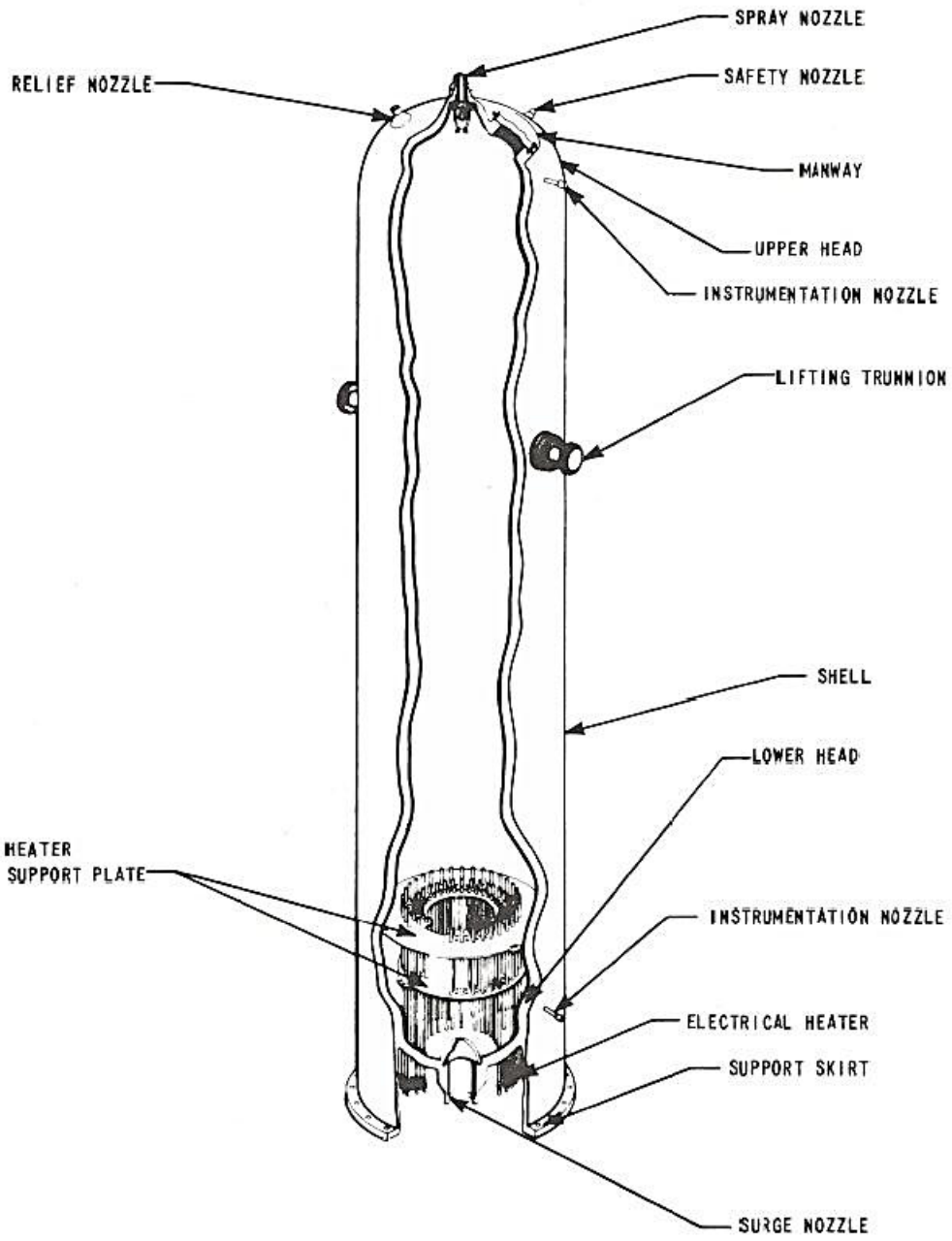

FIGURE 5.4.11-1

PRESSURIZER RELIEF TANK

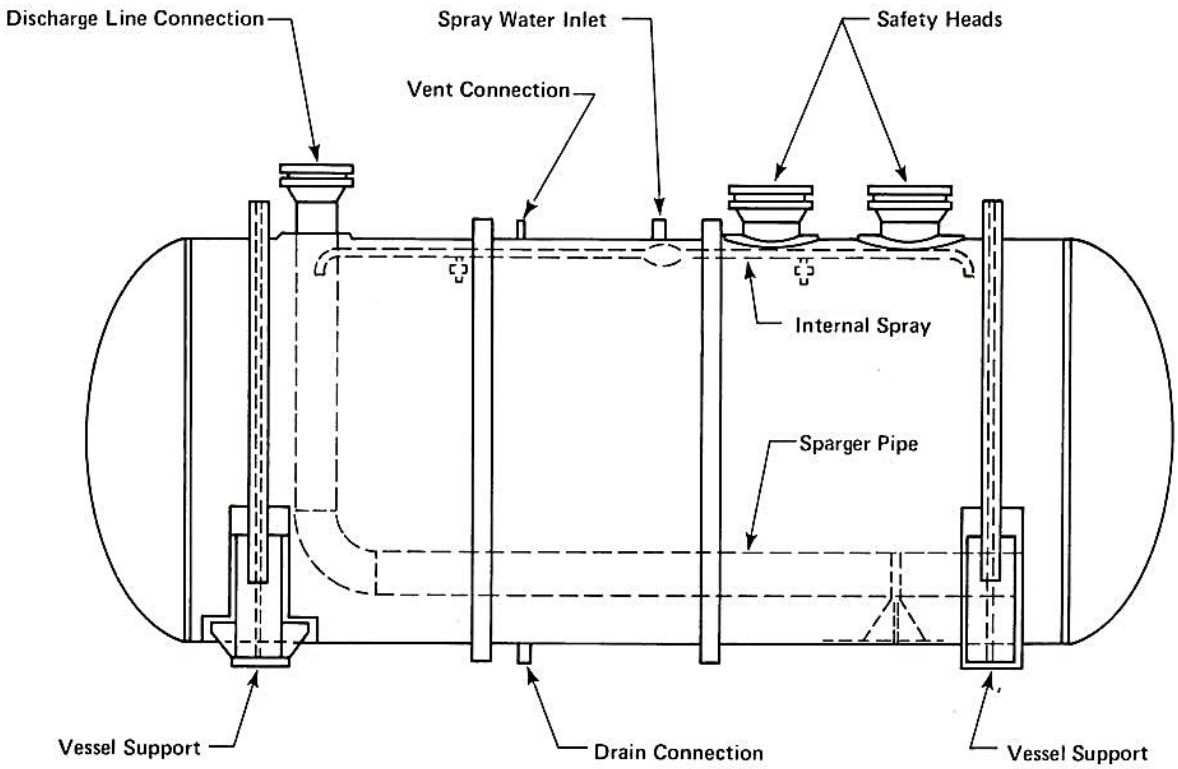

FIGURE 5.4.12-1

REACTOR COOLANT SYSTEM VENTS SCHEMATIC DIAGRAMS

NOTE: ALL ESSENTIAL PORTIONS OF THE RCS VENT SYSTEM COMPONENTS, PIPING AND VALVES ARE SEISMIC CATEGORY 1.

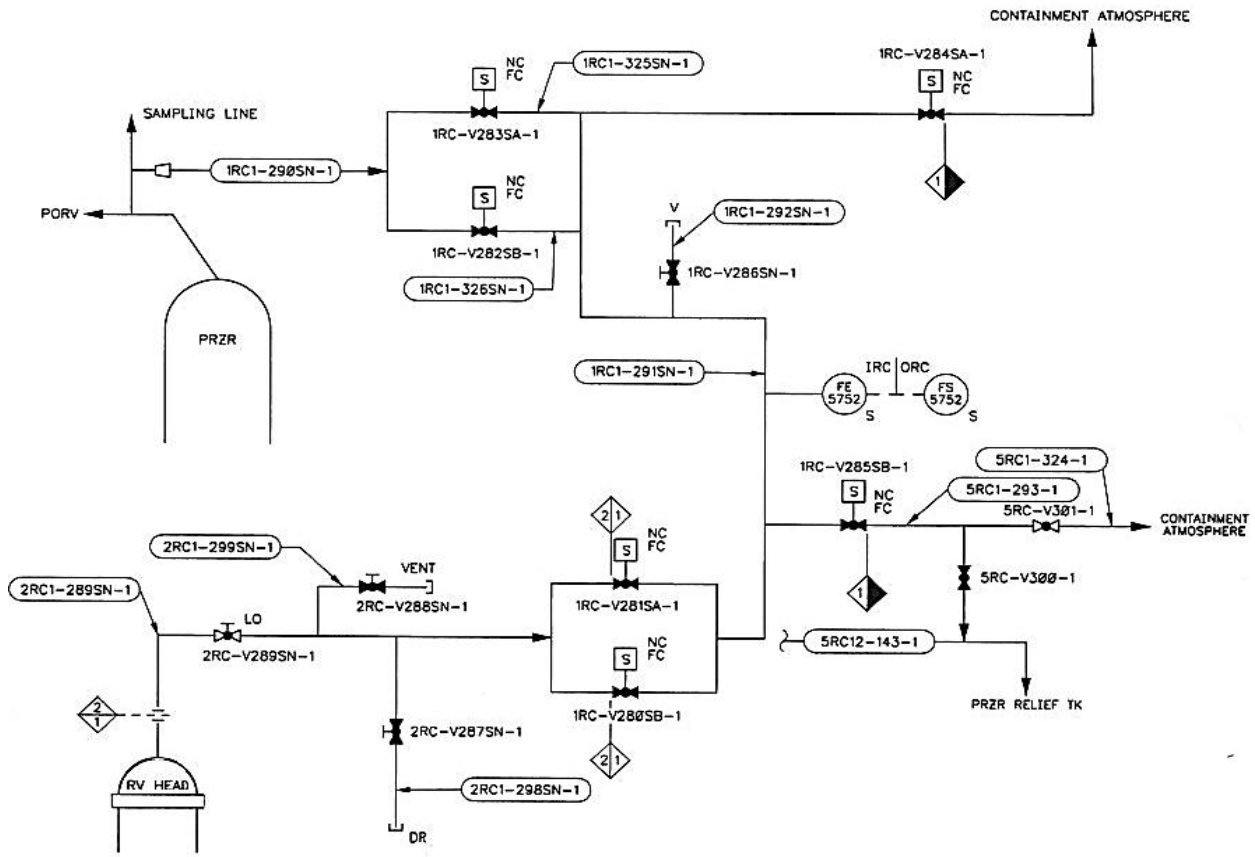

FIGURE 5.4.13-1

PRESSURIZER SAFETY VALVE

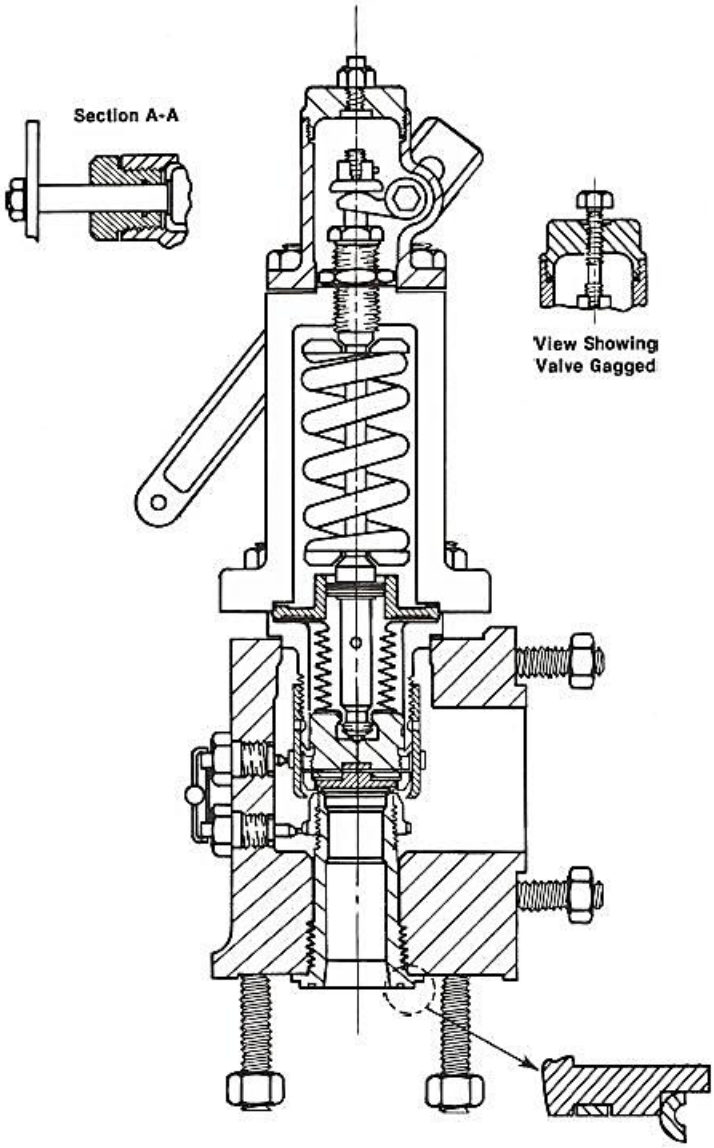

FIGURE 5.4.13-2

PRESSURIZER POWER OPERATED RELIEF VALVE

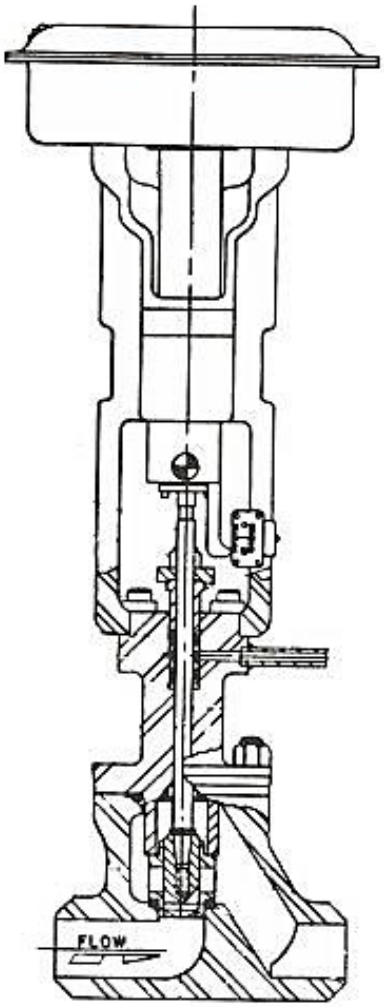

FIGURE 5.4.13-3

STEAM GENERATOR SAFETY RELIEF VALVE

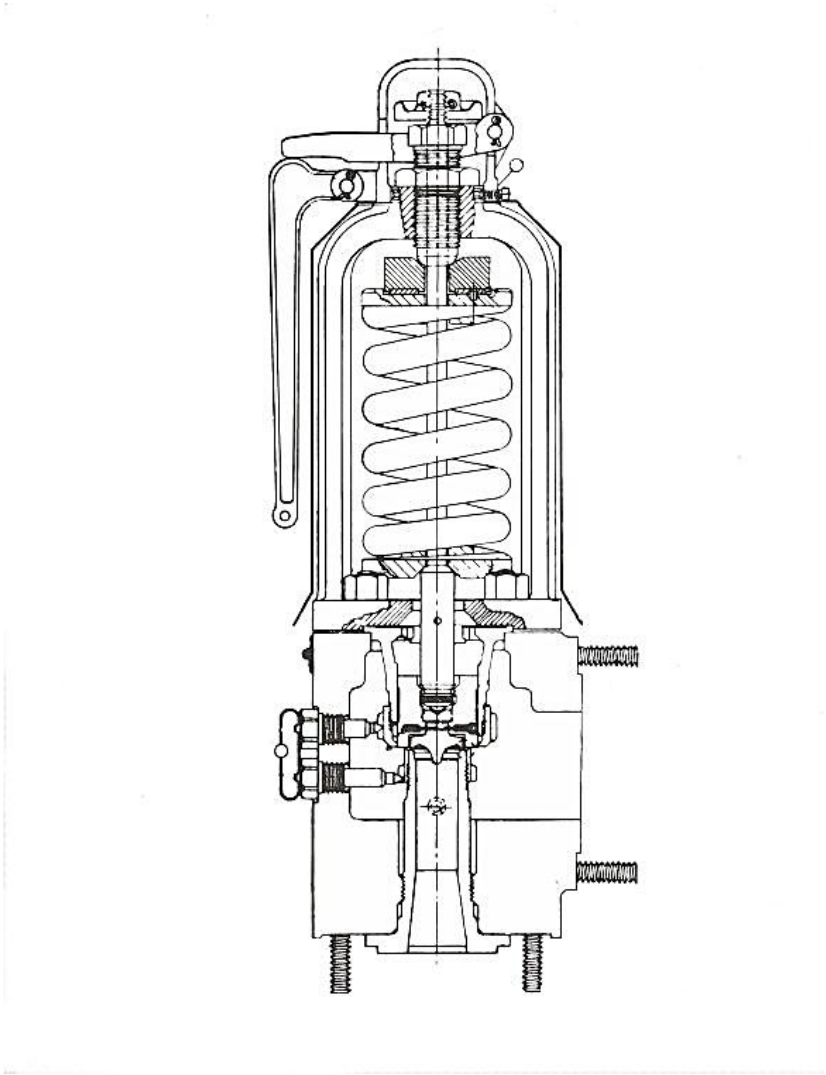

REF DWG: EMDRAC NO. 1364-2017 (REV. 4)

FIGURE 5.4.13-4

STEAM GENERATOR POWER OPERATED RELIEF VALVE

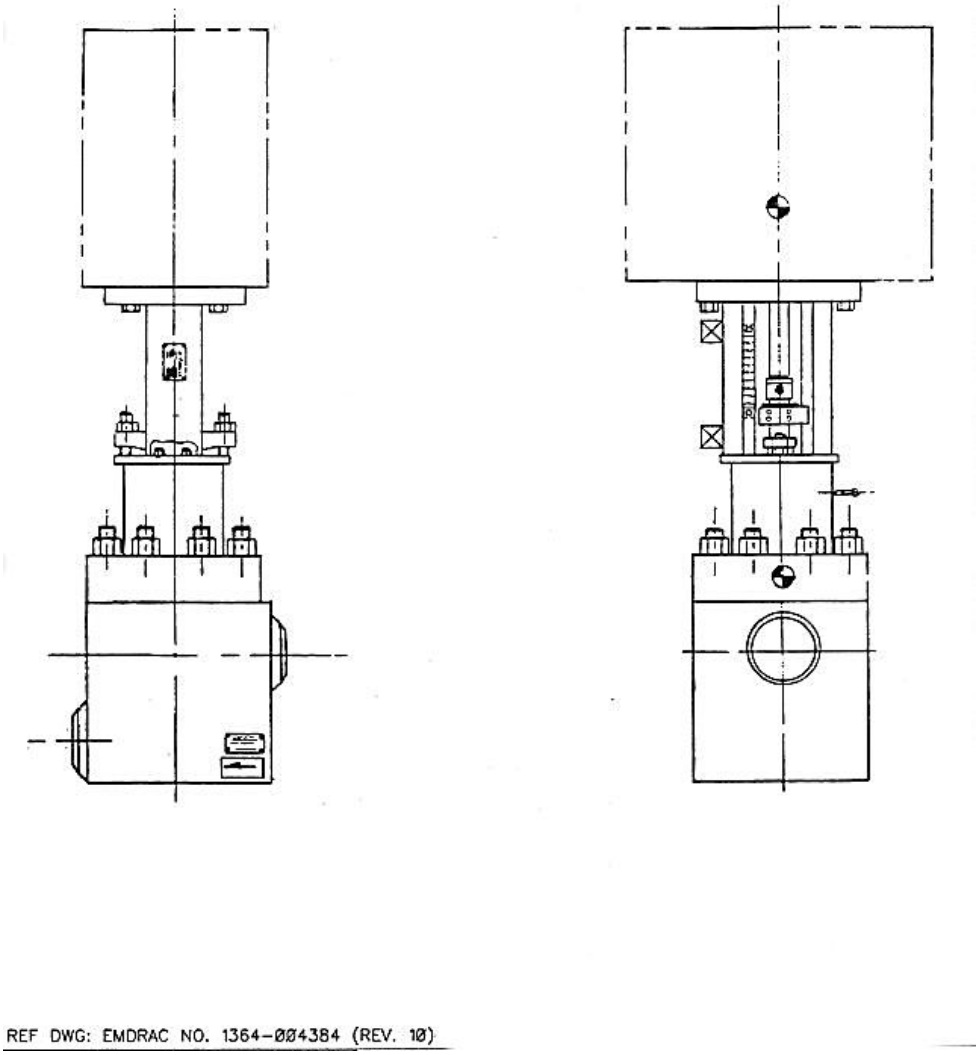

REF DWG: EMDRAC NO. 1364-004384 (REV. 10)

FIGURE 5.4.14-1

REACTOR VESSEL SUPPORTS

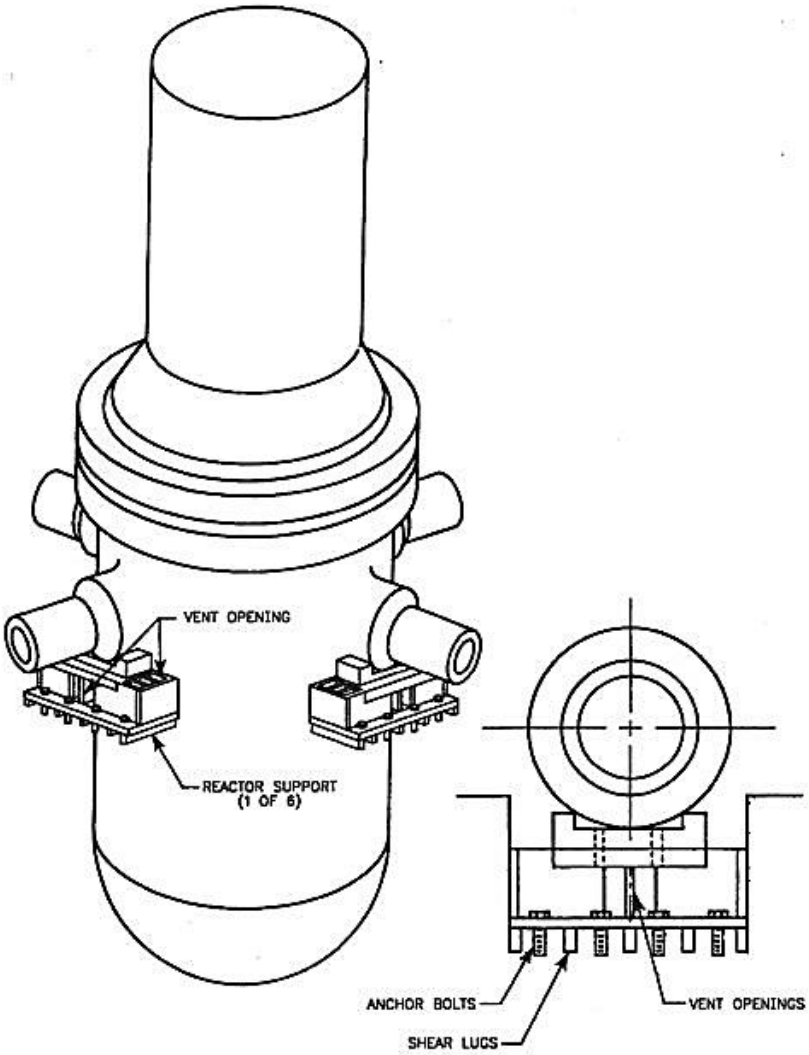

FIGURE 5.4.14-2

STEAM GENERATOR SUPPORTS

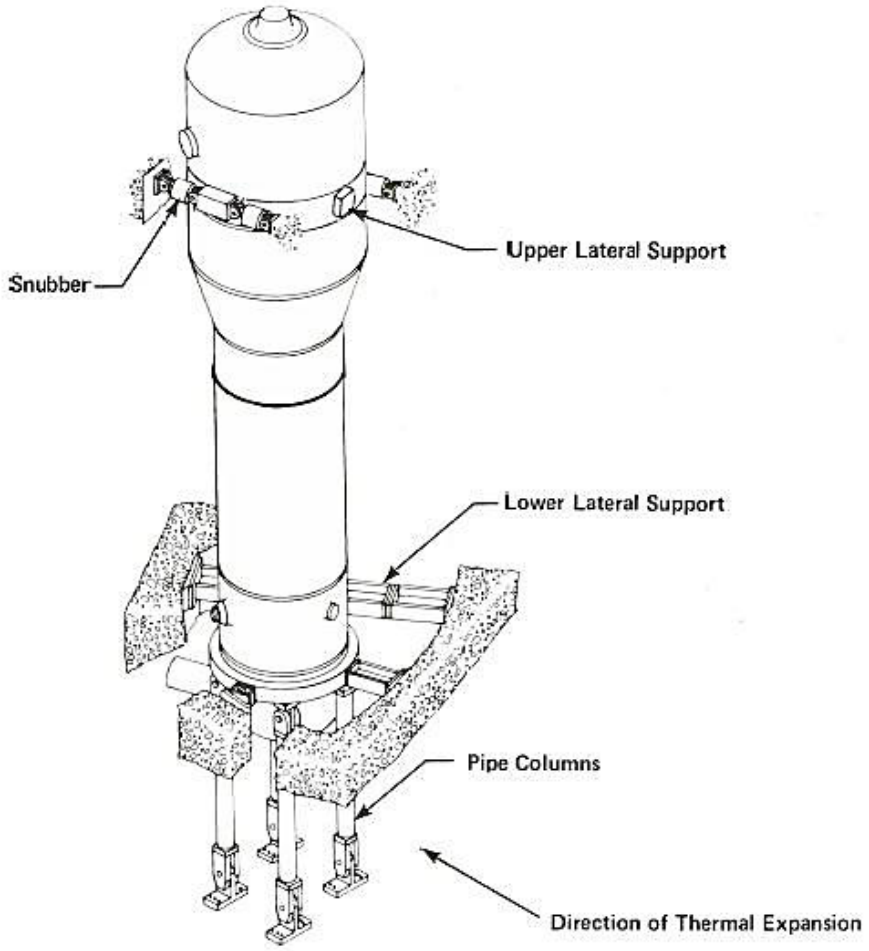

FIGURE 5.4.14-3

REACTOR COOLANT PUMP SUPPORTS

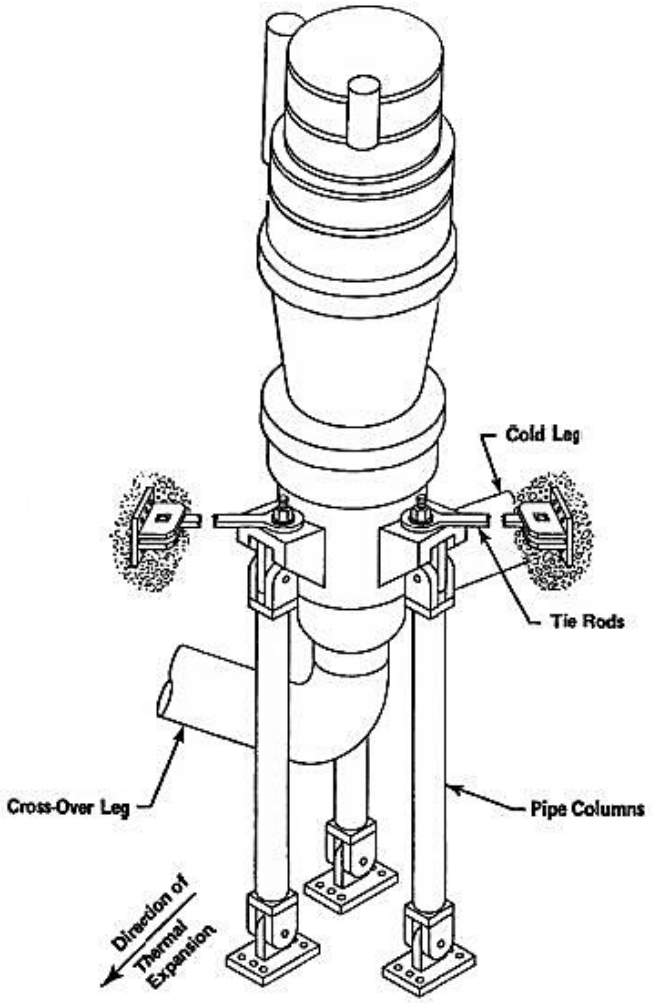

FIGURE 5.4.14-4
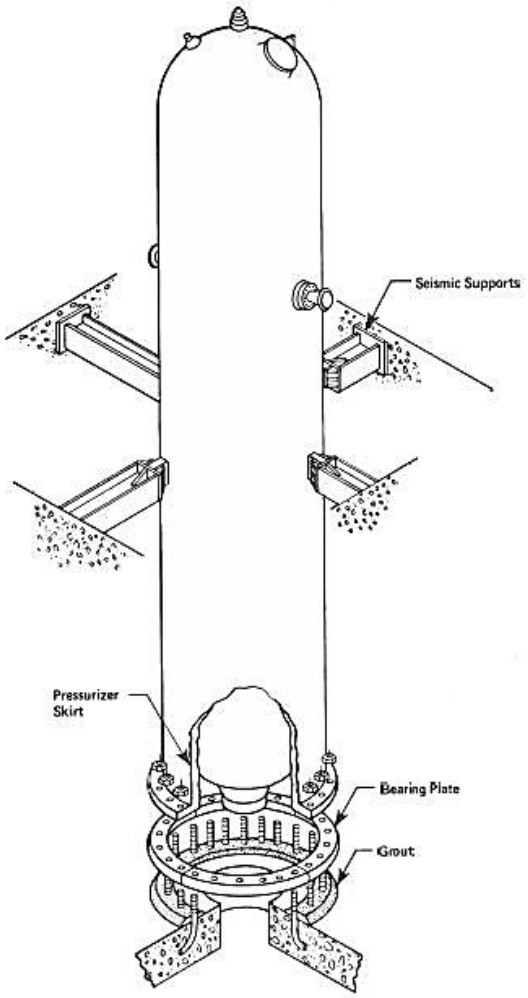
TYPICAL PRESSURIZER SUPPORTS