SEABROOK STATION
UPDATED FINAL SAFETY ANALYSIS REPORT

CHAPTER 6
ENGINEERED SAFETY FEATURES

SECTIONS

6.1(B)	Engineered Safety Feature Materials
6.1(N)	Engineered Safety Feature Materials
6.2	Containment Systems
6.3	Emergency Core Cooling System
6.4	Habitability Systems
6.5	Fission Product Removal and Control Systems
6.6	In-Service Inspection of Class 2 and 3 Components
6.7	Main Steam Isolation Valve Leakage Control System (BWR)
6.8	Emergency Feedwater System

APPENDICES

6A	Design Guidelines for In-Service Inspection of Piping Systems

6.1(B) ENGINEERED SAFETY FEATURE MATERIALS

This section provides a discussion of the materials used in Engineered Safety Feature (ESF) components and the material interactions that potentially could impair operation of ESF.

6.1(B).1 Metallic Materials

6.1(B).1.1 Materials Selection and Fabrication

Typical material specifications applicable to components in the ESF not covered by Subsection 6.1(N).1 are listed in Table 6.1(B)-1. In some cases this list of materials may not be totally inclusive; however, the listed specifications are representative of those materials used. Materials utilized in ESF have been selected for their compatibility with core and containment spray solution, and conform with the requirements of the ASME Boiler and Pressure Vessel Code, Section III, Articles NC-2160 and NC-3120, plus all applicable addenda and code cases.

Typical specifications for principal pressure-retaining ferritic materials, austenitic stainless steels and nonferrous materials, including bolting and weld rod materials used in pressure-boundary welds in the Engineered Safety Features, are listed in Table 6.1(B)-1. These materials are qualified to the requirements of the ASME Code, Section III and Section IX, and are used in procedures which have been qualified to these same rules.

The following controls are placed on fabrication and assembly of austenitic stainless steel materials used in the ESF components to insure a high degree of quality and reliability. These controls assure compliance with Regulatory Guides 1.31, 1.37, and 1.44:

a. Significant sensitization of austenitic stainless steel is avoided by imposing the following controls:

   1. Use of low-heat input welding procedures and processes, as well as maximum interpass temperature control
   2. Use of fully annealed material heat-treated in accordance with specific parameters (e.g., water quenching)
   3. Prohibition of stress relief after welding
   4. Engineering review of welding and heat-treatment procedures.

b. Specific controls are imposed during fabrication and installation to preclude contamination of stainless steel by chlorides and low melting point constituents, particularly during welding and heat treatment. These controls are monitored by checking chemical analysis certifications of materials that contact stainless steel (such as tapes, marking crayons and cleaning solutions), and engineering review of final cleaning procedures.

c. Cold working of stainless steel is prohibited after solution annealing except in mild environments where residual stresses from bending or forming are minimal. Piping for the containment spray system spray headers undergoes moderate bending during fabrication; however, this will have no deleterious affects on system performance since internal pressure during system operation is low and the chemical environment mild. In no case is cold-worked stainless steel with a yield strength of 90,000 psi or greater used in ESF constituents.

d. Each heat or lot of filler material is required to be checked to assure the presence of 5 to 20 percent ferrite as calculated from the chemical composition and/or by a magnetic measuring check of a weld pad made with the subject filler material. Maximum interpass temperature control is also imposed during welding to minimize hot cracking.

The thermal-insulation used on ESF piping and equipment inside containment is fiberglass blanket insulation of the type commercially known as Nukon, manufactured by Owens-Corning Fiberglass, with a stainless steel jacket over the outside surface of the insulation. Nukon is consistent with the recommendations of Regulatory Guide 1.36. Owens-Corning Fiberglass submitted Topical Reports OCF-1 on Nukon to the NRC for review in August 1977. The thermal insulation used on ESF piping and equipment outside containment shall be either fiberglass or calcium silicate molded sections with an aluminum jacket over the outside surface of the insulation.

6.1(B).1.2 Composition Compatibility and Stability of Containment Core Coolants

The pH of the coolants for the ESF during a loss of coolant is dependent upon the boron concentration of the Reactor Coolant System, the accumulators and the refueling water storage tank, and the concentration of sodium hydroxide in the spray additive tank. The concentrations of boron in the accumulators, and refueling water storage tank, and the concentration of sodium hydroxide in the spray additive tank are fixed and are verified periodically by analyzing samples of the solution in each tank and adjusting the chemical compositions if necessary. A recirculation/sample system is installed for the Spray Additive Tank to verify its concentration. The boron concentration in the Reactor Coolant System can vary from 0 to 4000 ppm depending upon the requirements for reactivity control. Depending on the various initial chemical compositions of the injected coolant and the Reactor Coolant System, the pH of the coolant can range from 8.8 to 9.5 at the beginning of the recirculation phase of ESF operation, and remains constant thereafter. The Ph of the spray solution during the injection phase will average between 9.1 and 10.3. The pH of the containment spray system sump water (and therefore the long-term ESF coolant) following a LOCA is monitored by withdrawing samples downstream of the RHR heat exchanger. Two sample points exist: the normal connection to the sample sink and a local sample point. Sodium hydroxide can be added, if necessary for pH adjustment, using the chemical and volume control system tanks and pumps. This assures the capability of maintaining a sump pH greater than 7.0 as recommended in Branch Technical Position MTEB 6-1. The solution would be prepared in the chemical mixing tanks and supplied to the suction of the charging pumps. The charging pump suction is fed from a cross-connect by the RHR system.

Information concerning hydrogen release by the corrosion of containment metals and the control of the hydrogen and combustible gas concentrations within the containment following a loss-of-coolant accident is contained in Subsection 6.2.5.

Water for containment spray and emergency core cooling is stored in the refueling water storage tank and the spray additive tank. Both tanks are constructed of stainless steel which has been demonstrated by test and experience to be compatible with solutions of borated water and sodium hydroxide.

6.1(B).2 Organic Materials

Significant quantities of coated surfaces inside containment that would be exposed to the post-LOCA environment are listed in Table 6.1(B)-2. The coating systems for these surfaces, except PCCW piping, are epoxy-based Keeler & Long coating systems designed for a 40-year life and are in compliance with the applicable ANSI standards for coating systems inside containment (ANSI N45.2, ANSI N101.2, ANSI N101.4 and ANSI N512). Thus the coating systems meet Regulatory Guide 1.54.

Other significant quantities of organic materials inside containment are listed in Table 6.1(B)-4.

6.1(N) ENGINEERED SAFETY FEATURE MATERIALS

6.1(N).1 Metallic Materials

6.1(N).1.1 Materials Selection and Fabrication

Typical materials specifications used for components in the Engineered Safety Features are listed in Table 6.1(N)-1. In some cases, this list of materials may not be totally inclusive. However, the listed specifications are representative of those materials used. Materials used conform with the requirements of the ASME Boiler and Pressure Vessel Code, Section III, plus applicable and appropriate addenda and code cases.

The welding materials used for joining the ferritic base materials of the Engineered Safety Features conform to or are equivalent to ASME Material Specifications SFA 5.1, 5.2, 5.5, 5.17, 5.18, and 5.20. The welding materials used for joining nickel-chromium-iron alloy in similar base material combination and in dissimilar ferritic or austenitic base material combination conform to ASME Material Specifications SFA 5.11 and 5.14. The welding materials used for joining the austenitic stainless steel base materials conform to ASME Material Specifications SFA 5.4 and 5.9. These materials are qualified to the requirements of the ASME Code, Section III and Section IX, and are used in procedures which have been qualified to these same rules. The methods utilized to control delta ferrite content in austenitic stainless steel weldments are discussed in Subsection 5.2.3.

All parts of components in contact with borated water are fabricated of or clad with austenitic stainless steel or equivalent corrosion-resistant material. The integrity of the safety-related components of the Engineered Safety Features is maintained during all stages of component manufacture. Austenitic stainless steel is utilized in the final heat-treated condition as required by the respective ASME Code, Section II, material specification. Furthermore, it is required that austenitic stainless steel materials used in the engineered safety features components be handled, protected, stored, and cleaned according to recognized and accepted methods which are designed to minimize contamination that could lead to stress corrosion cracking. These controls are stipulated in Westinghouse specifications which are discussed in Subsection 5.2.3. Additional information concerning austenitic stainless steel, including the avoidance of sensitization and the prevention of intergranular attack, can be found in Subsection 5.2.3. No cold-worked austenitic stainless steels having yield strengths greater than 90,000 psi are used for components of the Engineered Safety Features within Westinghouse scope of supply.

Westinghouse-supplied engineered safety features components within the containment that would be exposed to core cooling water and containment sprays in the event of a loss-of-coolant accident used materials listed in Table 6.1(N)-1. These components are manufactured primarily of stainless steel or other corrosion-resistant material. The integrity of the materials of construction for engineered safety features equipment when exposed to post-design basis accident conditions has been evaluated. Post-design basis accident conditions were conservatively represented by test conditions. The test program (Reference 1) performed by Westinghouse considered spray and core-cooling solutions of the design chemical compositions, as well as the design chemical compositions contaminated with corrosion and deterioration products which may be transferred to the solution during recirculation. The effects of sodium (free caustic), chlorine (chloride), and fluorine (fluoride) on austenitic stainless steels were considered. Based on the results of this investigation, as well as testing by ORNL and others, the behavior of austenitic stainless steels in the post-design basis accident environment will be acceptable. No cracking is anticipated on any equipment even in the presence of postulated levels of contaminants, provided the core cooling and spray solution pH is maintained at an adequate level. The inhibitive properties of alkalinity (hydroxyl ion) against chloride cracking and the inhibitive characteristic of boric acid on fluoride cracking have been demonstrated.

Information concerning compliance with Regulatory Guides 1.31, 1.37, and 1.44 can be found in Section 1.8.

6.1(N).1.2 Composition, Compatibility, and Stability of Containment and Core Spray Coolants

Westinghouse supplied the accumulator vessels used for storing ESF coolants. The accumulators are carbon steel clad with austenitic stainless steel. Because of the corrosion resistance of these materials, significant corrosive attack on the accumulator vessels is not expected.

The accumulator vessels are filled with borated water and are pressurized with nitrogen gas. The boron concentration, as boric acid, is 2600-2900 parts per million (ppm). Samples of the solution in the accumulators are taken periodically for checks of boron concentration. Principal design parameters of the accumulators are listed in Table 6.3-1.

The method of establishing containment spray and recirculation sump pH following a loss-of-coolant accident is discussed in Subsection 6.2.2. Information concerning hydrogen release by the corrosion of containment metals and the control of the hydrogen and combustible gas concentrations within the containment following a loss-of-coolant accident is discussed in Subsection 6.2.5.

6.1(N).2 Organic Materials

Quantification of significant amounts of protective coatings on Westinghouse-supplied components located inside the Containment Building is given in Table 6.1(N)-2; the painted surfaces of Westinghouse-supplied equipment comprise a small percentage of the total painted surfaces inside containment.

For large equipment requiring protective coatings (specifically itemized in Table 6.1(N)-2, Westinghouse specifies or approves the type of coating systems utilized; requirements with which the coating system must comply are stipulated in Westinghouse process specifications, which supplement the equipment specifications. For these components, the generic types of coatings used are zinc-rich silicate or epoxy-based primer with or without chemically cured epoxy or epoxy-modified phenolic top coat.

The remaining equipment requires protective coatings on much smaller surface areas and is procured from numerous vendors; for this equipment, Westinghouse specifications require that high quality coatings be applied using good commercial practices. Table 6.1(N)-2 includes identification of this equipment and total quantities of protective coatings on such equipment.

Protective coatings for use in the reactor containment have been evaluated as to their suitability in post-design basis accident conditions. Tests have shown that certain epoxy and modified phenolic systems are satisfactory for in-containment use. This evaluation (Reference 2) considered resistance to high temperature and chemical conditions anticipated during a loss-of-coolant accident, as well as high radiation resistance.

Information regarding assurance requirements for protective coatings is addressed in the discussion on conformance to Regulatory Guide 1.54 in Section 1.8. Further compliance information has been submitted to the NRC for review (via letter NS-CE-1352 dated February 1, 1977 to C. J. Heltemes, Jr., Quality Assurance Branch, NRC, from C. Eicheldinger, Westinghouse PWRSD, Nuclear Safety Dept.) and accepted (via letter dated April 27, 1977, to C. Eicheldinger from C. J. Heltemes, Jr.).

6.1(N).3 References

1. "Behavior of Austenitic Stainless Steel in Post Hypothetical Loss-of-Coolant Accident Environment," WCAP-7803, December 1971.
2. "Evaluation of Protective Coatings for Use in Reactor Containments," WCAP-7825, December 1971.

6.2 CONTAINMENT SYSTEMS

6.2.1 Containment Functional Design

6.2.1.1 Containment Structure

a. Design Bases

The containment design bases are established by the requirement that the system safely withstand the consequences of postulated accidents in conjunction with simultaneous occurrences of adverse environmental conditions. The containment structure and the containment enclosure, together with the exhaust system, are designed so that the offsite doses from radioactivity released under accident conditions are less than the limits set forth in 10 CFR 100.

The GOTHIC computer program (Reference 28) was used to develop a model of the Seabrook Station containment and associated safety systems. The model was employed to determine the containment response to various LOCAs and main steam line breaks at an analyzed core power level of 3659 MWt. The GOTHIC model is similar to the CONTRAST-S-MOD1 model that was originally used to determine the Seabrook Station containment response. Updates to the GOTHIC model are based on an approved methodology for LOCA containment pressure and temperature analyses.

The peak containment pressure and temperature predicted by GOTHIC for an analyzed core power level of 3659 MWt is bounded by the results of the original containment analysis described in the following subsections. Additionally, an evaluation of the short-term LOCA mass and energy releases presented in Table 6.2-30 determined that they are bounding for an analyzed core power level of 3659 MWt, without the need to be adjusted.

Therefore, the containment design bases, evaluation, and results presented in the following subsections remain bounding and applicable for an analyzed core power level of 3659 MWt and have not been revised.

1. Postulated Accident Conditions for Containment Design

Accidents postulated to determine the containment internal design pressure and the containment design temperature include ruptures of the primary and secondary coolant system piping concurrent with a variety of single failures. The simultaneous loss of offsite power (LOOP) has also been assumed whenever it results in more restrictive design conditions.

The detailed accident conditions for primary system pipe rupture are given in Subsection 6.2.1.3; those for secondary system pipe ruptures in Subsection 6.2.1.4.

The single failures postulated for the primary system pipe ruptures include failure of a containment spray train and failure of a diesel generator. Those postulated for the main steam line breaks include failure of main feedwater pump to trip, a feedwater isolation or control valve, a main steam isolation valve, an emergency feedwater pump run out control, and a containment spray train.

The calculated maximum internal containment pressure is 49.6 psig, resulting from a (full) double-ended guillotine rupture of the primary coolant system pipe at the pump suction, with one of the two containment spray pumps failed at time of containment spray actuation, maximum initial containment pressure of 1.5 psig and minimum flow rate of 2808 gpm for the Containment Building Spray System. The system design flow rate is 2930 gpm. This is the containment design basis (DB) accident. In accordance with General Design Criterion 50 of 10 CFR 50, this value was increased to 52.0 psig, thus providing a 4.8 percent margin between the design and maximum calculated values.

Use of containment temperature responses following the main steam line breaks (MSLBs), which are more severe than those for loss-of-coolant-accident (LOCAs), to obtain an envelope for equipment qualification, is discussed in Section 3.11.

2. Postulated Accident Conditions for Subcompartment Design

Ruptures of appropriate high-energy lines at various locations within a subcompartment, concurrent with the SSE, have been postulated to determine the design requirements for the subcompartment structure. The maximum calculated pressure is not affected by LOOP or any postulated single failure because of the rapid occurrence of the peak pressure.

The accidents postulated for each subcompartment are described in Subsection 6.2.1.2. This subsection also contains the maximum calculated pressures and the design pressures associated with each subcompartment.

3. Mass and Energy Releases

Accidents involving ruptures in the primary or secondary coolant system pipes can result in the release of a significant amount of mass and energy into the containment atmosphere.

(a) Loss-of-Coolant Accident

The assumptions and details of calculational methods concerning the mass and energy releases into the containment following a rupture in the Primary Coolant System are treated in Subsection 6.2.1.3.

The sources of water mass available for release include the initial reactor coolant, borated water from the accumulators and the refueling water storage tank (RWST), and the aqueous solution in the spray additive tank (SAT). The amount of water in each source is shown in Table 6.2-1.

During the blowdown phase, the reactor coolant energy is the principal source of energy released to the containment. The high-enthalpy, high-pressure water is rapidly discharged from the break at a critical-flow rate that depends upon the conditions at the break location. Some portion of it flashes into steam due to the comparatively lower pressure and lower temperature of the containment atmosphere. The discharge rate soon drops as the reactor coolant pressure is relieved. The end of blowdown is defined as the time when the flow at the break reaches a minimum.

Following the blowdown phase, additional heat is transferred via the coolant to the containment. This is comprised of decay heat, core internal energy, reactor vessel metal energy, steam generator energy, metal-water heat of reaction, and the energy of the coolant itself.

The post-blowdown phase is characterized by a long, slow transient in which mass and energy discharge rates depend upon the flooding rate of the core. The flooding rate and the performance of the Emergency Core Cooling System (ECCS) are discussed in Section 6.3.

(b) Secondary System Pipe Rupture

The details concerning assumptions and calculational methods dealing with mass and energy releases into the containment following a rupture in the Secondary Coolant System are discussed in Subsection 6.2.1.4.

For ruptures in the main steam line, the sources of mass available for release include the steam generator initial inventory, the main and emergency feedwater pumped into the steam generator before isolation, the feedwater in the unisolated piping which eventually flashes into the steam generator, and the steam in the unisolated main steam piping. The first item varies from 124,000 lbm to 168,000 lbm, depending on the initial operating power level. The rest depends on the time of isolation and the single failure postulated. The sources of energy for release into the containment include the energy of the initial steam generator inventory and the heat transferred from the primary system to the secondary system during the transient period.

The high-enthalpy and high-pressure steam is discharged from the break at the critical-flow rate upon rupture of a main steam pipe at the exit of a steam generator flow restrictor. The discharge rate decreases as the affected steam generator is depressurized. Depending on the break type, an isolation signal is generated by either the Reactor Protection System or by the instrumentation system monitoring the containment pressure. The signal causes isolation of the main feedwater lines and the main steam. The blowdown drops considerably following the isolation, but the flow from the affected steam generator continues until dryout time. Thereafter, the blowdown flow rate drops to a value equal to the emergency feedwater flow rate.

The effects of a postulated feedwater line rupture are not as severe as the main steam line break because the break effluent of a feedwater line rupture is at a lower specific enthalpy. Therefore, feedwater line break mass and energy releases to the containment are not addressed since they are bounded by steam line break releases.

4. Effects of Engineered Safety Features on Energy Removal

The energy released as a result of a LOCA or a secondary system pipe rupture is partially removed from the containment by the Containment Building Spray (CBS) System and the Residual Heat Removal (RHR) System through the Station Service Water (SSW) System.

Shortly following a coolant system pipe rupture, ECCS automatically starts. When the containment pressure reaches a high-pressure setpoint, borated water from the RWST mixed with spray additives is pumped through the spray nozzles to the containment atmosphere by the CBS system. When the RWST reaches a low-level setpoint, the source of water for the CBS system and the RHR portion of the ECCS is switched to the containment sump. In this recirculation mode the containment sump water is cooled by the CBS and RHR heat exchangers, and either pumped into the reactor vessel or sprayed into the containment atmosphere. The CBS and RHR heat exchangers transfer heat to the service water via the intermediate closed-loop primary component cooling water.

All Engineered Safety Features which are available for containment heat removal are described in Subsection 6.2.2. Relevant system parameters are summarized in Table 6.2-2.

5. Capability of ESF for Post-Accident Pressure Reduction and Energy Removal

All Engineered Safety Features are separated into two independent subsystems of equal capability to meet the single failure criteria. One hundred percent redundancy is also provided in the associated electrical actuation systems. Emergency power is supplied from redundant onsite power sources.

The containment and its heat removal systems are designed so that operation of only one of the two CBS trains, in conjunction with the ECCS at any point in its range of capability, is sufficient to reduce the pressure of the containment atmosphere to within half of its calculated peak value in less than 24 hours following containment design basis LOCA.

6. Containment Leakage Rate Bases

The containment is isolated from the outside environment following major accidents by the Containment Isolation System. The presence of the containment enclosure and the use of exhaust fans to produce a slightly sub-atmospheric pressure in the space between the containment enclosure and the containment structure reduce the direct leakage from the structure to the environment to zero. The containment design is such that the maximum rate of leakage from the containment structure to the containment enclosure following a coolant pipe rupture is 0.15 percent of the containment air mass per day. The containment heat removal systems are capable of reducing the containment pressure, within 24 hours following the accident, to such a value that the volumetric leakage rate is less than one-half of the maximum value. The use of HEPA and charcoal filters in the exhaust line from the containment enclosure reduces the discharge of radioactive iodine into the environment to the extent that offsite doses following an accident are within the guidelines of 10 CFR 100. The exhaust system is discussed in Subsection 6.2.3.

The periodic testing and surveillance program to assure the above containment leakage rate is discussed in Subsection 6.2.1.6 and in the Technical Specifications.

7. Bases for Minimum Containment Pressure Analysis

Assumptions in the minimum pressure analysis for ECCS confirmatory studies are based upon maximizing the ESF heat removal capability and other heat removal mechanisms. They are discussed in Subsection 6.2.1.5.

b. Design Features

1. Containment Structure

The containment structure is a reinforced concrete cylinder with a hemispherical dome and a reinforced concrete foundation, keyed into the rock by the depression for the reactor cavity pit and by continuous bearing around the periphery of the foundation mat. A welded steel liner plate is anchored to the inside face of the concrete as a leak-tight membrane. The liner plate on top of the foundation slab is protected by a 4-foot thick concrete slab which serves to carry internal equipment loads and forms the floor of the containment. A detailed description of the containment structure is given in Subsection 3.8.1. Figures showing typical sections through the containment can be found in Section 1.2.

2. Containment Enclosure

The containment enclosure is a reinforced concrete cylindrical structure with a hemispherical dome. Detailed descriptions of the structure are presented in Subsection 3.8.4. Figures showing sections and elevations of the containment enclosure can be found in Section 1.2.

Fans maintain the pressure in the space between the containment structure and the containment enclosure at a value slightly below the atmospheric pressure following a LOCA. All joints and penetrations are welded or sealed to ensure air tightness.

3. Protection Against Dynamic Effects

Provision is made for protecting the containment structure, internal compartment and ESF systems against loss of function from effects that could occur following postulated accidents. These provisions include physical barriers designed to minimize the dynamic effects of missiles and pipe whip, pipe whip restraints to limit damage from ruptured lines, physical separation by distance and redundancy of components and/or safety trains, as appropriate. A detailed discussion of provisions for protection against dynamic effects inside the containment is presented in Section 3.6 and Subsection 3.5.1.2.

4. Codes, Standards and Guides

Codes, standards and guides applied to the design of the containment structure and internal structures are identified in Subsections 3.8.1 and 3.8.3.

5. Protection Against External Pressure

The containment structure, including its steel components, is designed to withstand a maximum external pressure of 3.5 psi (differential pressure). The most limiting event for establishing the required external pressure is the inadvertent actuation of the Containment Spray System, which results in a negative pressure differential of 2.6 psi. The analysis follows:

The containment is normally maintained at a slight positive pressure by the containment online purge subsystem (see Updated FSAR Subsection 9.4.5.2c.2). With this system in operation, the containment is maintained at a nominal positive pressure of 0.5 psig, with high and low pressure alarms at 0.65 psig and 0.35 psig, respectively. Accordingly, if this system is in operation, the initial pressure inside containment is always positive as an initial starting condition.

However, because the above system is not redundant, the analysis for this event is based upon an initial containment ambient pressure of 14.6 psia. Initial temperatures and relative humidity are 120°F and 90 percent. The analysis utilized the containment free volume, geometrical data and passive heat sink data as provided in Updated FSAR Table 6.2-1, Table 6.2-3 and Table 6.2-4.

Both spray trains are assumed to operate with a maximum flow rate of 3500 gpm per train. The analysis assumes the total capacity of the refueling water storage tank of 475,000 gallons is available for spray at a minimum temperature of 50°F (see Updated FSAR Subsection 6.2.2.3). Using the computer code CONTRAST-S-MOD-1, the minimum resultant containment pressure of 12.0 psia results from the inadvertent actuation of sprays.

The above event produces a negative pressure differential of 2.7 psig. This is to be compared with the containment structure design differential pressure of negative 3.5 psig (see Updated FSAR Subsection 6.2.1.1b.5). This provides a nominal negative pressure margin of 0.8 psig.

6. Potential Water Traps

Principal areas where water could be trapped and prevented from being circulated by the ECCS and CBS system during a major accident are the reactor cavity and refueling canal. Figures showing plan and sectional views of these areas are given in Section 1.2. Other minor volumes not addressed here have been taken into account in calculating the NPSH available to the ECCS and CBS system pumps, as discussed in Subsection 6.2.2.

In the event of the LOCA, the reactor cavity, incore instrument sump, ECCS sump, and other minor volumes will be filled with water up to elevation (-)26 feet during the operation of the ECCS and CBS systems. A total of 17,070 cubic feet of water is required to fill these two volumes up to the (-)26 feet elevation, resulting in a reduction of water height of approximately 17 inches which would otherwise contribute to NPSH available to the ESF pumps. This has been factored into the NPSH calculations for the pumps.

Three four-inch diameter drain lines connected to a common header permit a flow path between the reactor cavity, refueling canal, and the rest of the containment, thereby preventing water from being trapped in the reactor cavity and refueling canal to elevations above the water level in the rest of the containment. In the event that all the drain lines were blocked or all the normally open drain valves were left closed (see Subsection 6.2.2.3a.3 for further details) the loss of 5760 cubic feet of water above the (-)26 feet elevation would occur. This would result in a further reduction of water height of approximately 6 inches. This has been factored into the NPSH calculation for pumps also.

7. Containment Cooling and Ventilation System

During normal operation, fan coolers maintain the containment atmosphere below 120°F. It uses the cooling water from the Primary Component Cooling Water System, while its humidity is permitted to vary. Five of six fan coolers operate continuously, with the sixth fan cooler serving as an installed spare.

Cooled air from the containment fan coolers is also directed into the reactor cavity at various locations to maintain equipment and concrete at or below design temperatures.

Three induced draft fans, two of which are normally operating, draw air past the control rod drive mechanism through a cooling shroud to maintain the equipment at or below its design operating temperature. The third fan serves as an installed spare.

An Online Purge System is provided to periodically purge the containment air to control airborne radioactivity. A separate system provides pre-entry purging of the containment and purging during refueling operations. The Containment Structure Heating and Cooling System and the Containment Online and Pre-entry Purge Systems are discussed in detail in Subsection 9.4.5.

c. Design Evaluations

1. Containment Pressure-Temperature Response Following A LOCA or a Secondary Coolant System Pipe Rupture

Containment pressure and temperature responses following a variety of postulated ruptures in the primary and secondary coolant system pipes have been calculated by means of the computer program CONTRAST-S-MODl which is described in detail in Reference 1.

(a) System Parameters and Initial Conditions

The system parameters and the initial conditions used in the pressure-temperature response analysis are presented in Table 6.2-1 and Table 6.2-2. The parameters and the initial conditions are chosen to maximize the containment pressure and temperature responses unless their effects are insignificant.

(b) Actuation of Containment Sprays

The Containment Spray System is initiated by a containment spray actuation signal which is generated by the containment Hi-3 ("P" signal). The analysis limit for this setpoint is 19.8 psig. The maximum delay in signal processing and the response time of the protection system instrumentation is one second. The stroking time of the spray system valves is 20 seconds to become fully open with the exception of CBS-V38 and CBS-V43 which have a maximum stroke time of 25 seconds. The maximum delay time to bring the pumps to full speed and to fill the feed lines and headers is 38 seconds following the receipt of this signal. The valve opening and fill-up of the line takes place concurrently. Therefore, the maximum delay of 39 seconds after generation of the "P" signal consists of 1 second plus 38 seconds for fill-up.

In the case of loss of offsite power concurrent with a coolant system pipe rupture, the emergency electric power from the onsite diesel generators will be available in 12 seconds. Receipt of the "P" signal by the actuation sequencer, which is discussed in detail in Subsection 8.3.1, will cause the spray valves to start opening immediately, or as soon as the emergency power is available. If the "P" signal is received within 27 seconds or between 27 and 52 seconds following an accident, the spray pumps will be started at 27 seconds or 52 seconds respectively. If the signal is received after 52 seconds, the pumps will be started immediately. Thus, for any "P" signal received before 27 seconds following an accident, which is true for all LOCA cases analyzed, the spray time is always at 65 seconds after the accident. For MSLB cases analyzed, the time to generate the "P" signal varies over a wide range. However, for all MSLB cases, a constant conservative spray delay time of 65 seconds after receipt of the signal has been assumed.

(c) Containment Passive Heat Sinks

The structure and equipment within the containment which have been modeled as passive heat sinks are listed in Table 6.2-3. Table 6.2-4 gives the thermophysical properties of the materials for the heat sinks. In Table 6.2-3, some of the heat sinks of similar structure have been lumped into various thickness groups. For internal heat sinks exposed to the containment on one side only, it is conservatively assumed that the other side is insulated. For those exposed on both sides and having a plane of symmetry, only half of the heat sink is modeled but the effective surface area is doubled. For the steel-lined structures, the steel-concrete interface resistance has been modeled as an equivalent air gap of inch. This is conservative when compared with experimental data in References 2 and 3. The interface conductance therein varies from 100,000 Btu/hr-ft^2-°F for a very good contact to 10 Btu/hr-ft^2-°F for a very poor contact. The lower limit corresponds to the equivalent conductance of an air gap approximately 20 mils thick.

The heat transfer between the containment and the passive heat sinks is calculated in the CONTRAST-S code by combining the contribution from the condensation and convection. An effective heat transfer coefficient, h_{eff}, based on the temperature difference between the containment atmosphere and the heat sink surface can be defined as follows:

$$h_{eff} = f(h_{cond}-h_{conv})(T_{sat}-T_{wall})/(T_{con}-T_{wall}) + h_{conv}$$

where,

h_{cond} = condensing heat transfer coefficient

h_{conv} = convective heat transfer coefficient

T_{sat} = containment atmosphere dew point

T_{wall} = surface temperature of heat sink

T_{con} = containment atmosphere temperature

f = 1, if $T_{sat} > T_{wall}$, 0 otherwise.

In the estimation of the condensing heat transfer coefficient, the modified Tagami correlation (Reference 4) is used for the LOCA analysis while the Uchida correlation (Reference 5) is used for the MSLB analysis. The convective heat transfer coefficient has been assumed to have a constant value of 2 Btu/hr-ft^2-°F in all accident cases analyzed. This corresponds to the minimum value given in the Tagami correlation. The heat transfer through a passive heat sink is computed in the CONTRAST-S code by solving the partial differential equation for unsteady, one-dimensional heat conduction using a fully implicit finite-difference scheme which is unconditionally stable. The accuracy of the solution can be improved by decreasing the grid spacing as well as the time increment. A sensitivity study (Reference 6) has been performed to establish the upper limit of the grid spacing in concrete for a reasonable degree of accuracy. It was found that grid spacings of 0.05 inch for concrete a few inches thick is adequate. Considerably larger grid spacings have been found adequate for steel, due to the relatively smaller temperature gradients.

The selection of the grid spacings has also been guided by the following criteria, suggested in Reference 7, to avoid large, meaningless fluctuations in the solution:

$$\frac{(\Delta x)}{\propto(\Delta t)} \geq 1 + \frac{h(\Delta x)}{k}$$

where,

Δx = grid spacing

Δt = time increment

$\propto$ = thermal diffusivity of the material

h = heat transfer coefficient at the heat sink surface

k = thermal conductivity of the material

For a typical heat transfer coefficient of 80 Btu/hr-ft^2-°F during the containment pressure-temperature transient, this criterion suggests a grid spacing greater than 0.038 inch for concrete (k = 0.083 Btu/hr-ft-°F and $\propto$ = 0.028 ft^2/hr) and greater than 0.138 inch for carbon steel (k = 27.0 Btu/hr-ft-°F and $\propto$ = 0.459 ft^2/hr), when a time increment of 1 second is used.

(d) Containment Pressure and Temperature Responses

(1) Loss-of-Coolant Accident

A spectrum of postulated reactor coolant system pipe ruptures has been considered. This includes three break locations listed in Table 6.2-5 and three break types and sizes given in Table 6.2-6.

The ESF systems relied upon to mitigate the consequences of a LOCA are the ECCS and CBS systems operating in conjunction with the Primary Component Cooling Water System and the SSW system. Failure of one of the two CBS trains obviously would result in more severe containment conditions. The failure may be caused by failure of a pump, failure of a valve, or, assuming loss of offsite power concurrent with the LOCA, failure of a diesel generator. As to the ECCS, any of its various components may fail, leading to partial loss of its cooling effect. In the extreme case, one of the two trains may fail entirely, due to failure of a diesel generator to start, assuming a concurrent loss of offsite power. The above two limiting single active failures (SAFs) are delineated in Table 6.2-7.

The cooling water for ultimate heat disposal is available from two sources, namely, the circulating water tunnels and the cooling tower basin. Section 9.2 presents a detailed description of these sources. The tunnel water temperature is not expected to exceed 65°F. During the summer months, extended hot weather combined with ocean current changes can result in minor ocean temperature excursions above the 65°F design temperature threshold. System analysis has been performed to permit continued plant operation up to a maximum ocean temperature of 68.5°F. Concerning containment heat removal, the use of tunnel water following a LOCA is more restrictive than that of the cooling tower basin water. All LOCA analyses presented have been performed using the ocean as the ultimate heat sink.

The effects of the break type/size and the SAF have been fully investigated in the case of a rupture at the pump suction (Location No. 1). In the case of Locations No. 2 (cold leg) and No. 3 (hot leg), the results are expected to be less severe than those for Location No. 1 for the most limiting break type/size and SAF combination, namely Break No. 1 and SAF No. 2. Overall, a total of six cases have been analyzed. The details of the calculation of the mass and energy releases for the six cases analyzed are given in Subsection 6.2.1.3. Those results have been based on a temperature of 120°F for the safety injection water. For Seabrook Station Unit 1, the maximum temperature of the injection water is 100°F.

The time for switchover from the injection mode to the recirculation mode depends upon the injection flow (charging pumps, high pressure safety injection pumps, and low pressure safety injection pumps), spray flow and the quantity of water available in the RWST. Since one of the two spray trains has been assumed to fail in all cases analyzed, the recirculation times are calculated for the maximum safety injection (two injection trains) and the minimum safety injection (one injection train) cases. With the injection and spray flow rates given in Table 6.2-2 and the available quantity of water in the RWST provided in Table 6.2-1, the recirculation times for the maximum safety injection and the minimum safety injection cases are calculated to be 1688 seconds and 2755 seconds, respectively.

The transient responses of the containment pressure, temperature and sump water temperature for the six cases analyzed are shown in Figure 6.2-1, Figure 6.2-2, Figure 6.2-3, Figure 6.2-4, Figure 6.2-5, Figure 6.2-6, Figure 6.2-7, Figure 6.2-8, Figure 6.2-9, Figure 6.2-10, Figure 6.2-11, Figure 6.2-12, Figure 6.2-13, Figure 6.2-14, Figure 6.2-15, Figure 6.2-16, Figure 6.2-17 and Figure 6.2-18. The transients show that, following blowdown, and prior to refill, the containment pressure and containment temperature drop because the mass and energy released through the breaks ceases completely at the end of the blowdown period. However, the reflood and post-reflood mass and energy released from the break increase the containment pressure and temperature again. The containment pressure and temperature eventually drop due to decreases in the mass and energy release rates, and due to energy removal by containment spray and passive heat sinks. After the switchover from the injection mode to the recirculation mode, the containment spray water is taken from the containment sump through the containment spray heat exchanger, and is at a higher temperature than that of the RWST. The spray heat removal rate thus drops.

The containment pressure and temperature, therefore, increase after the start of recirculation. The mass and energy release data presented in Subsection 6.2.1.3 is based on the conservative assumption that the remainder of the energy (Reactor Coolant System, core-stored, primary and secondary metal, etc.) exits through the break within 3600 seconds. The reduced heat removal capacity by the spray due to increased temperature, together with conservative energy release to the containment atmosphere, results in a recirculation pressure peak which is observed to be the maximum peak for all pump suction breaks. The energy release through the break drops at 3600 seconds, and only the decay heat is released thereafter. The containment pressure and temperature continue to drop monotonically from then on.

The calculated peak containment pressure and peak containment temperature, along with the energy released to the containment up to the end of blowdown, are summarized in Table 6.2-8 for each of the six cases analyzed. The maximum peak containment pressure is seen to be 49.6 psig (see also discussion presented in Subsection 6.2.1.1a.1). It occurs in Case 1.1.2, namely, a full double-ended guillotine rupture at the pump suction with the single active failure of one spray train, which corresponds to maximum safety injection and minimum spray cooling. Case 1.1.2 is therefore taken as the containment DB LOCA. The transient responses have been calculated for up to 10^5 seconds after the accidents, except for Case 3.1.1, (Hot-Leg Break). As can be seen from the plots presented, the periods covered include the most important aspects of the transient and show the general trend of responses.

The accident chronology is given in Table 6.2-9, one for each break location. It includes the time when the ESF system begins operation and time of occurrence of other important events. The distribution of energy inventories prior to the accident, at the end of the blowdown phase and at the end of the core reflood phase, and also the steam generator energy releases during post-reflood phase, are provided in Subsection 6.2.1.3.

The long-term recirculation operation causes reduction of the containment pressure to within a few psi above the atmospheric pressure in one day, which is well below one-half of the calculated peak pressure in all cases analyzed.

For the DB LOCA, the effective heat transfer coefficient based on the temperature difference between the containment atmosphere and the heat sink surface is plotted as a function of time in Figure 6.2-19.

(2) Secondary System Pipe Ruptures

Containment temperature and pressure responses have been evaluated following a spectrum of breaks in the main steam line occurring at various plant operating power levels, each with a single failure in the safety systems postulated to concur with the accident. The details of calculating the mass and energy releases into the containment after a main steam line break (MSLB) are given in Subsection 6.2.1.4.

The initial plant operating power levels and the spectrum of break types and sizes analyzed are summarized in Table 6.2-10 and Table 6.2-11, respectively.

The blowdown data for double-ended breaks has been developed for breaks located downstream of the steam generator flow restrictor and upstream of the main steam isolation valve (MSIV). The postulation of a break downstream of the flow restrictor is conservative for large double-ended breaks since a break upstream of the flow restrictor would result in a smaller energy release because of severe water entrainment in the forward flow and the flow-limiting effect of the restrictor on the reverse flow. For small double-ended breaks, there is no difference between the two locations. Since a break immediately downstream of the flow restrictor allows the steam in this section to blow down completely shortly after isolation, blowdown based on this break location is considered conservative.

For the split rupture, the blowdown data developed are valid for any break location in the steam piping and the header.

As presented in Table 6.2-10 and Table 6.2-11, a total of 17 operating power break type/size combinations for a MSLB have been considered. The concurrence of a single failure in the safety systems can result in more severe conditions in the containment. In this analysis, a loss of offsite power has been assumed to concur with the MSLB whenever it results in more severe containment conditions, in addition to a single failure in the safety systems.

However, for the conservative estimation of mass and energy releases, offsite power is assumed to be available.

The safety-related equipment relied upon to mitigate the consequences of an MSLB include those required for isolation of the main feedwater lines and the main steam lines, delivery of emergency feedwater into the steam generators, and delivery of spray water into the containment. The Containment Spray System is the only active heat removal system for which credit has been taken in mitigating the consequences of a MSLB. The signal to isolate the main feedwater lines and the main steam lines and to start the Emergency Feedwater System is generated by the Reactor Protection System for all double-ended ruptures listed in Table 6.2-11. For the split ruptures, this isolation signal is conservatively assumed to be generated when the containment pressure reaches the Hi-1 setpoint of 6.8 psig for isolation of feedwater lines and Hi-2 setpoint of 7.4 psig for isolation of main steam lines, although the nominal values for the Hi-1 and Hi-2 setpoints are 4.3 psig. After the isolation setpoint is reached, a delay of 1.0 second for instrument response and signal processing has been allowed. The containment spray actuation signal ("P" signal) is generated when the containment pressure reaches the Hi-3 setpoint, as discussed in Subsection 6.2.1.1c.1(b).

The isolation of the main feedwater lines is achieved by tripping the main feedwater pumps and closing the feedwater control valves (FCVs) and the feedwater isolation valves (FWIVs). The pump trip is immediate. The FCVs are capable of closing completely within 10 seconds (5-second delay and 5-second stroke) after receipt of the isolation signal, and the FWIVs within 10 seconds after receipt of the isolation signal. Failure to trip a main feedwater pump would result in more main feedwater being pumped into the steam generators and an increase in the blowdown. Failure of the broken-loop FWIV would allow additional feedwater, namely that in the piping between the FWIV and FCV to flash into the steam generator. Loss of offsite power, however, would result in less feedwater being fed to the steam generators because of the coastdown of the various pumps in the Condensate and Feedwater System.

The isolation of the main steam lines is achieved by closing the MSIVs, the turbine control valves (TCVs) and the turbine stop valves (TSVs). The MSIVs are capable of closing completely within 5 seconds after receipt of the isolation signal and the TCVs and the TSVs within 0.2 second. Failure of the broken-loop MSIV to close would allow additional steam, namely that remaining in the steam piping bounded by the MSIVs, the TSVs, the condenser, and the moisture separators/reheaters, to blow down after isolation. Failure of a TCV or a TSV, however, would not cause more blowdown since closure of either one would effectively isolate that line. Loss of offsite power has no effect on the isolation of the main steam lines.

The emergency feedwater that enters the affected steam generator would eventually blow down. For conservatism, it is assumed that the emergency feedwater is pumped into the affected steam generator immediately after the MSLB. The flow isolation valves in each line are pre-set in the open position to provide a flow of at least 235 gpm to the intact steam generator, and are closed by a high flow signal in the event of a broken loop. In case of failure of a flow isolation valve in the open position, the flow is limited by the flow restricting venturi to at most 750 gpm. In either case, the flow of emergency feedwater to the affected steam generator is assumed to be terminated manually 30 minutes after the MSLB.

For the Containment Spray System, failure of one of the two trains would reduce its heat removal capacity by half and result in more severe containment conditions. The effect of loss of the offsite power on the actuation time of the spray system has been taken into account, as previously discussed by assuming a later spray time.

The single failures which have been considered, as discussed above, are listed in Table 6.2-12. The first 5 failures would increase mass-energy release to the containment, while the last failure would result in a reduction in the heat-removing capacity of the Containment Spray System.

Table 6.2-10, Table 6.2-11 and Table 6.2-12 show that there is a total of 102 combinations of plant operating powers, break type/sizes, and single failures. Mass and energy releases to the containment for these 102 cases have been calculated. The effect of single failures No. 3 and No. 4 of Table 6.2-12 on the blowdown for any type of ruptures, and single failure No. 2 for split ruptures, is to increase the steam generator dryout time only. This is essentially true for single failure No. 5 for all ruptures since a somewhat larger blowdown rate after the dryout time has been observed not to be sufficient to cause a second peak in the containment temperature or the containment pressure. Thus, the above single failure combinations can be eliminated. However, to clearly illustrate the effect of the single failures on the containment pressure-temperature transient, all 6 single failures have been analyzed for the 102 percent power level and for each of the three break types, No. 1, No. 2 and No. 3. This amounts to a total of 56 cases. After carefully examining the containment pressure-temperature responses for these cases, the following general inferences are drawn:

The containment pressure and temperature transients show that the peak containment pressure occurs either at the time the spray water enters the containment or at the steam generator dryout time. The latter occurs when the blowdown is severe enough to cause increases in the containment pressure even with the containment spray system operating, which is true for all double-ended ruptures. The peak containment temperature always occurs at the spray time.

When considering accidents at the same power level and with the same single failure, the peak containment pressure increases with the size of the break in the case of double-ended ruptures. The peaks for the split ruptures are always higher than those for the small double-ended ruptures, but lower than those for the full double-ended ruptures. The effect of power level, with the inherent break size change in the case of small double-ended breaks, is not always monotonic. The peak containment pressure varies monotonically with power level only in small double-ended breaks with a concurrent single failure of a MSIV or a containment spray train, and in full double-ended breaks with a concurrent single failure of a containment spray train. in the former, the peak pressure increases monotonically as the power level increases, while in the latter, it decreases monotonically.

The computed peak containment pressure and peak containment temperature, and the times of their occurrence are summarized in Table 6.2-13, Table 6.2-14 and Table 6.2-15 for full double-ended ruptures, small double-ended ruptures, and split ruptures, respectively. Only those cases which effectively envelope containment pressure and temperature responses following MSLBs are shown. Also included in the tables is the total energy released to the containment in each case. The transients for Cases 5.1.6 and 1.1.3 are shown in Figure 6.2-20, Figure 6.2-21, Figure 6.2-22 and Figure 6.2-23.

The maximum peak containment pressure, as can be seen in these tables, is 36.1 psig and occurs in Case 5.1.6, namely a full double-ended guillotine rupture at hot shutdown with a concurrent failure of one containment spray train. This pressure is significantly lower than that for the DB LOCA. For this maximum peak containment pressure case, the mass-energy release is given in Subsection 6.2.1.4. The effective heat transfer coefficient, based on the temperature difference between the containment atmosphere and the heat sink surface, is plotted in Figure 6.2-24 as a function of time for four representative heat sinks, along with the Uchida correlation (Reference 5) which was used to calculate the condensing heat transfer coefficient. The heat sinks are the containment liner and typical thin-steel, thick-steel and concrete structures. All four effective heat transfer coefficients are seen to be much lower than those predicted by the Uchida correlation (taking into account the 0.4 factor for concrete surfaces) when the containment atmosphere is superheated. When the containment atmosphere becomes saturated, the effective heat transfer coefficients become identical to that of the Uchida correlation, as long as the heat sink surface temperature is lower than the containment atmosphere (which is approximately equal to the saturation temperature corresponding to the partial pressure of steam in the containment). If the heat sink surface temperature exceeds the containment atmosphere temperature, condensation ceases and convective heat transfer from the heat sink to the containment atmosphere takes place.

The maximum peak containment temperature is 364°F and occurs in Case 1.1.2, namely a full double-ended guillotine rupture at 102 percent power with a concurrent failure in the broken-loop MSIV. The mass-energy release for this case is presented in Subsection 6.2.1.4.

A plot of the heat transfer coefficients similar to that presented for the maximum peak containment pressure is shown in Figure 6.2-25 for Case 1.1.2. Again, a similar behavior is observed. The effective heat transfer coefficients for the containment liner, the thin steel structure, the thick steel structure, and the concrete structure are considerably lower than those predicted by the Uchida correlation when the containment atmosphere is superheated. They become identical only when the containment atmosphere becomes saturated and the heat sink surface temperature is lower than the containment atmosphere saturation temperature.

(e) Post-Accident Containment Temperature/Pressure Monitoring

Instrumentation provided in the containment can be used to monitor and record containment pressure in the event of an accident. This system is discussed in detail in Section 7.5. Containment sump temperature is not monitored since it is not consequential to verification of proper operation of the Post-Accident Heat Removal Systems.

6.2.1.2 Containment Subcompartments

a. Design Bases

The major subcompartments within the containment are the reactor cavity, the steam generator compartments, the pressurizer compartment and the pressurizer skirt cavity. These subcompartments are designed to withstand the differential pressures and jet impingement forces resulting from a postulated pipe break. Reactor cavity and steam generator compartment overpressurization has been deleted from the design basis in accordance with the final NRC Rulemaking with respect to GDC-4, dated October 27, 1987. Sufficient openings for venting these subcompartments are provided to keep differential pressures on the subcompartment walls and forces imposed on equipment supports within their structural limits. In addition, restraints and supports on the various equipment contained within these subcompartments are designed so that pipe whip and forces transmitted through component supports do not threaten the structural integrity of these subcompartments or the containment structure.

The pipe breaks considered in all subcompartments are full double-ended ruptures.

Of all the postulated break locations, the ones considered severe for the subcompartment pressurization analyses are listed in Table 6.2-16. The loads on the subcompartment walls and on the equipment supports for a given subcompartment are determined for various break locations.

The subcompartment walls and the equipment supports are designed so that the maximum calculated load does not exceed the design load.

b. Design Features

1. Reactor Cavity

The reactor cavity is a cylindrical annulus around the reactor vessel. The surrounding structure, termed the primary shield wall, is a heavily reinforced concrete structure which provides support for the reactor vessel and its associated coolant system piping. The lower portion of the cavity, where the core lies, has an outside diameter of 17.08 ft. The inner diameter of the annulus, formed by the outer diameter of the reactor vessel, is 16.76 ft. The upper region of the cavity where the hot and cold leg nozzles emanate from the vessel has a diameter of 25.5 ft. Contained within this upper region is the ring girder which gives added rigidity to the vessel support. The reactor coolant loop pipe whip restraints were eliminated from the design bases by ECA 25/113665, Rev. A, in accordance with the final NRC Rulemaking with respect to GDC-4, dated October 27, 1987.

A neutron shield consisting of borated concrete, and which is integral to the permanent reactor cavity seal ring, is installed around the reactor vessel refueling flange to reduce neutron streaming and dose rates on the containment operating floor during power operation. The permanent seal ring is equipped with removable hatch covers and neutron shield plugs to allow for the required ventilation air flow rate and access to the reactor cavity annular space, respectively.

Reactor cavity overpressurization has been deleted from the design basis in accordance with the final NRC Rulemaking with respect to GDC-4, dated October 27, 1987.

A vertical section through the reactor cavity is shown in Figure 6.2-26. Figure 6.2-27 shows the plan view at the elevation of the nozzles. The total free volume of the reactor cavity plus the reactor pool region above is 48,978 cu. ft. The total vent area from the reactor cavity to the containment is 1,757 sq. ft, primarily through the reactor pool region. The free volume and the vent area are conservatively calculated with the insulation in place.

2. Steam Generator Compartment

A steam generator compartment is a reinforced concrete structure which encloses the steam generator, a reactor coolant pump and its associated primary and secondary coolant system piping. Figure 6.2-29 and Figure 6.2-30 show sections of the steam generator compartment. Horizontal sections at various elevations are provided in Figure 6.2-31, Figure 6.2-32, Figure 6.2-33 and Figure 6.2-34. Large vent paths from the steam generator compartment to the containment are available via the reactor coolant pump area, and the adjacent steam generator compartment. The top of the steam generator compartment is also open to the containment. The steam generator stands on four supports anchored to the floor at El. (-)26'-0." The total free volume of a steam generator compartment is 23,040 cu. ft. There are no blowout panels or other pressure-dependent areas considered in the analysis. Free volumes and vent areas have been calculated with the insulation in place. Steam generator compartment overpressurization has been deleted from the design basis in accordance with the final NRC Rulemaking with respect to GDC-4, dated October 27, 1987.

3. Pressurizer Compartment

The pressurizer compartment is a reinforced concrete structure extending from El. 0'-0" to El. 63'-0" which encloses the pressurizer and its associated piping. The pressurizer skirt, which is a cylindrical support extending from the bottom of the pressurizer, anchors the pressurizer to the compartment floor. A ring support at El. 23'-6¾" provides lateral support for the pressurizer. Section and plan drawings of the pressurizer compartment are shown in Figure 6.2-35, Figure 6.2-36, Figure 6.2-37, Figure 6.2-38, Figure 6.2-39 and Figure 6.2-40. Free volumes and vent areas have been calculated assuming the insulation remains intact during the transient. The HVAC ducting and sheet metal panels at elevation 16'-6" are designed to blow out in the event of a pressure buildup of 0.25 psig in the compartment to provide additional vent area. The total free volume of the compartment used in the analysis is 6638 cu. ft and the total vent area to the containment is 400 sq. ft.

4. Pressurizer Skirt Cavity

The pressurizer skirt cavity is formed by the bottom of the pressurizer and its supporting skirt. A 14" surge line which connects the reactor coolant system with the pressurizer passes through a 5½ ft diameter opening in the pressurizer compartment floor. Figure 6.2-41 and Figure 6.2-42 show the plan and elevation drawings of the pressurizer skirt cavity. The volume below the pressurizer skirt has a large vent opening to the containment. The total free volume of the skirt cavity is 1860 cu. ft and the total vent area to the containment is 238 sq. ft. The insulation on the pressurizer and on the surge line is assumed intact in calculating the free volume and vent openings.

c. Design Evaluation

1. Mass and Energy Release Data

The mass and energy release data for all the breaks considered for the subcompartment analyses has been generated by Westinghouse. Discussions of the blowdown model are provided in Reference 8.

2. Computer Code for Subcompartment Pressurization Analysis

The subcompartment pressure transients were calculated using COMPRESS - a digital computer program. A detailed description of the analytical method can be found in Appendix 15C and Reference 9. Some important aspects of the method are outlined below:

(a) Mathematical Model

The COMPRESS computer program calculates the pressure and temperature transient responses in a set of inter-connected volumes following a high energy line rupture. The subcompartment initial conditions, free volumes, vent path areas, inertias and loss coefficients, as well as the mass and energy release from the break, are input to the code. For vent paths covered by blowout panels or hinged doors, the flow area, inertia and loss coefficient are to be supplied as functions of the position of the vent cover. Information is also required on the physical properties of the vent cover related to the dynamics.

Computations for the transient pressure and temperature are made by performing mass and energy balances in each volume during small time steps. The flow between inter-connected volumes is calculated assuming quasi-steady thermodynamic conditions in the volumes. It is assumed that the air-steam-water mixture in each volume is homogeneous and in thermodynamic equilibrium during the time step. The entrainment of the water from condensed vapor is conservatively assumed to be 100 percent. The flow is based on the vent path characteristics at the previous time step. The position of a blowout panel or hinged door, which determines the vent path characteristics, is obtained by solving the equation of motion at each time step, utilizing the calculated nodal pressures.

(b) Vent Flow Calculations

The COMPRESS code offers various options for calculating the flow between connected volumes. The flow can be sonic or subsonic depending upon the ratio of upstream and downstream pressures. Subsonic flow is calculated using the incompressible flow equation or the ideal nozzle equation. Sonic flow is calculated using the ideal nozzle equation or Moody's two-phase flow correlation. However, in the present analyses, the vent flow calculations were made using the incompressible flow equation and the ideal nozzle equation, and the smaller of the two calculated flows is used as the actual vent flow for the conservative prediction of the subcompartment pressure. The complete entrainment of water with the air-steam mixture, the homogeneity of air-steam-water mixture and the thermodynamic equilibrium between the gas and liquid phases are assumed throughout the vent path.

(c) Vent Path Loss Coefficient

The resistance to flow in a vent path is, in general, due to change in the flow area (expansion and contraction), friction, change in the flow direction and flow obstructions. Various components of the loss coefficient are calculated following the procedures outlined in Reference 10. All contractions and expansions are considered to be sudden changes in the flow area. All the components are appropriately lumped together and used for a given vent path.

3. Pressure Transient Analyses

(a) Subcompartment Modeling

Each subcompartment is subdivided into a number of nodes to determine a realistic subcompartment pressure response. Boundaries between the nodes are placed at locations where large pressure gradients can occur either due to physical flow restrictors or due to the fluid inertia. A particular nodalization is developed for a given subcompartment through a nodalization sensitivity study, to determine the minimum number of nodes required to adequately predict the pressure profiles in the subcompartment. This involves several nodalizations for each subcompartment with various numbers of nodes, especially in regions where large pressure gradients exist. By comparing the results of various nodalization schemes for a given subcompartment, that scheme which results in a converged solution so that the subcompartment pressure profiles are not appreciably changed by further nodal refinement is selected for the pressurization analysis.

(b) Nodalization Sensitivity Study

The transient pressure responses in various subcompartments are analyzed by subdividing into a set of inter-connecting nodes. The pressure at any particular location is usually sensitive to the nodalization scheme employed. As the nodalization is made more refined, the calculated subcompartment pressure responses are closer to the real situation. To ensure that a particular nodalization scheme is adequate to predict the subcompartment pressure responses, a nodalization sensitivity study is usually performed by employing various nodalization schemes. When it is established that by further refinement of the nodalization the subcompartment pressure responses or the equipment loads within the subcompartment do not change significantly, the nodalization scheme is considered adequate.

(1) Reactor Cavity

Reactor cavity overpressurization has been deleted from the design basis in accordance with the final NRC Rulemaking with respect to GDC-4, dated October 27, 1987.

(2) Steam Generator Compartment

Steam generator compartment overpressurization has been deleted from the design basis in accordance with the final NRC Rulemaking with respect to GDC-4, dated October 27, 1987.

(3) Pressurizer Compartment

The pressurizer compartment pressure transient analysis for the nodalization sensitivity study has been performed following a double-ended rupture in the spray line at El. 34'-0". The three nodal schemes employed for the sensitivity study are given in Figure 6.2-54. In the 15-node scheme, the break region is divided into 2 nodes and the whole compartment is divided into 6 vertical regions. The 23-node scheme has 6 nodes in the break region and has 6 vertical regions. In the 29-node scheme, the whole compartment is divided into 7 vertical regions.

The horizontal pressure profiles around the pressurizer at the break elevation are shown in Figure 6.2-55, while Figure 6.2-56 gives the vertical profile. For the three nodalizations, Figure 6.2-57 depicts the sidewise forces and Figure 6.2-58 depicts the moments that act on the pressurizer. The horizontal and vertical pressure profiles, as well as the forces and moments on the pressurizer, demonstrate that the 23-node scheme adequately predicts the compartment pressure response.

(4) Pressurizer Skirt Cavity

The pressure transients in the pressurizer skirt cavity are calculated following a double-ended guillotine rupture in the surge line. The two nodal schemes used for the sensitivity study are shown in Figure 6.2-59 and Figure 6.2-60. In the 5-node scheme the volume underneath the pressurizer down to El. (-)5'-11" is taken as the break node. In the 6-node scheme the break node consists of the volume down to El. 0'-0" only. The peak pressure in the two cases is within 3 percent, even though the break node volume in the 6-node model is about half of that in the 5-node model. Further refinement of the nodalization below El. (-)5'-11" will not affect the pressure in the skirt cavity because a choked flow condition is established from the break node to the adjacent volume in the skirt cavity. The 6-node scheme, therefore, is adequate for the skirt cavity pressurization analysis.

(c) Results

(1) Reactor Cavity

Reactor cavity overpressurization has been deleted from the design basis in accordance with the final NRC Rulemaking with respect to GDC-4, dated October 27, 1987.

(2) Steam Generator Compartment

Steam generator compartment overpressurization has been deleted from the design basis in accordance with the final NRC Rulemaking with respect to GDC-4, dated October 27, 1987.

(3) Pressurizer Compartment

All postulated double-ended guillotine ruptures in the spray line at various discontinuities have been considered to determine the design loads on the pressurizer supports and also on the compartment structures.

The sensitivity study performed for a full double-ended rupture of the spray line (5.187 in I.D.) demonstrated the adequacy of the 23-nodal model. Using the model, the compartment pressurization was analyzed for a break at El. 34'-0". Figure 6.2-69 graphically shows the transient pressures in each node in the pressurizer compartment. The differential pressures for various compartment walls are given in Figure 6.2-70. The mass and energy releases following a double-ended guillotine rupture used in the analysis are provided in Table 6.2-30. Table 6.2-31 presents the vent path characteristics used in the analysis. The nodal data, the pressurizer compartment initial conditions, calculated peak differential pressures, design peak differential pressures and the design margins for a spray line rupture are presented in Table 6.2-32. The calculated peak differential pressures listed in Table 6.2-32 are the maximum differential pressures considering all the postulated break locations listed in Table 6.2-16.

(4) Pressurizer Skirt Cavity

A double-ended guillotine rupture of the surge line (11.188 in. I.D.) at the pressurizer nozzle was analyzed using a 6-node model. The pressure response of the nodes is shown in Figure 6.2-71. The mass and energy release data used for this break is given in Table 6.2-33. The vent path characteristics are presented in Table 6.2-34.

Table 6.2-35 presents the nodal data, skirt cavity initial conditions, calculated peak differential pressures, design peak differential pressures and the design margins for this rupture.

6.2.1.3 Mass and Energy Release Analysis for Postulated Loss-of-Coolant Accidents

This analysis presents the mass and energy releases to the containment subsequent to a hypothetical loss-of-coolant accident (LOCA). The release rates are calculated for pipe failure at three distinct locations:

- Hot leg (between vessel and steam generator)
- Pump suction (between steam generator and pump)
- Cold leg (between pump and vessel).

During the reflood phase, these breaks have the following different characteristics. For a break in the pump suction or cold leg piping, a portion of the accumulator or safety injection flow in the intact loop can bypass the downcomer and flow directly to the break. For a cold leg pipe break, all of the fluid which leaves the core must vent through a steam generator and be vaporized by heat addition to the primary from the secondary. However, relative to breaks at the other locations, the core flooding rate (and therefore the rate of fluid leaving the core) is low, because all the core vent paths include the resistance of the reactor coolant pump. For a hot leg pipe break, the vent path resistance is relatively low which results in a high core flooding rate but the majority of the fluid which exits the core bypasses the steam generators in venting to the containment. The pump suction break combines the effects of the relatively high core flooding rate, as in the hot leg break, and steam generator heat addition as in the cold leg break. As a result, the pump suction breaks yield the highest energy flow rates during the post-blowdown period.

The spectrum of breaks analyzed includes the largest cold and hot leg breaks, reactor inlet and outlet respectively, and a range of pump suction breaks from the largest to a 3.0 ft^2 break. Table 6.2-36 presents the specific cases analyzed and a list of tables which contain the results for each case. Because of the phenomena of reflood as discussed above, the pump suction break location is the worst case. For this reason a spectrum of break sizes has been used in this analysis for the pump suction location. Other break locations result in less severe containment pressure transients than the pump suction location. Smaller break sizes at these locations result in less severe transients than full double-ended guillotine breaks. Therefore the hot leg and cold leg locations have only been analyzed with an assumed double-ended guillotine break.

The LOCA transient is typically divided into four phases:

- Blowdown - includes the period from accident occurrence (when the reactor is at steady-state operation) to the time when the total break flow stops.
- Refill - the period of time when the lower plenum is being filled by accumulator and safety injection water. (This phase is conservatively neglected in computing mass and energy releases for containment evaluations.)
- Reflood - begins when the water from the lower plenum enters the core and ends when the core is completely quenched.
- Post-Reflood - describes the period following the reflood transient. For the pump suction and cold leg breaks a two-phase mixture exits the core, passes through the hot legs and is superheated in the steam generators. After the broken loop steam generator cools, the break flow becomes two phase.

a. Mass and Energy Release Data

1. Blowdown Mass and Energy Release Data

Table 6.2-37, Table 6.2-38, Table 6.2-39, Table 6.2-40, Table 6.2-41 and Table 6.2-42 present the calculated mass and energy releases for the blowdown phase of the various breaks analyzed with the corresponding break size.

2. Reflood Mass and Energy Release Data

Table 6.2-43, Table 6.2-44, Table 6.2-45, Table 6.2-46 and Table 6.2-47 present the calculated mass and energy releases for the reflood phase of the various breaks analyzed, along with the corresponding safeguards assumption (maximum or minimum). The reflood results have been omitted for the hot leg break since the blowdown releases are sufficient to determine the peak containment pressure for this break location.

3. Dry Steam Post-Reflood Mass and Energy Release Data

The calculated mass and energy releases for the post-reflood phase with dry steam are provided in the reflood mass and energy release tables (Table 6.2-45, Table 6.2-46, Table 6.2-47) after end of 10-foot entrainment occurs.

4. Two Phase Post-Reflood Mass and Energy Release Data

Table 6.2-48 and Table 6.2-49 present the two phase (froth) mass and energy release data for a double-ended pump suction break using minimum and maximum safeguards assumptions, respectively. Table 6.2-50 presents the results for a 0.6 ft^2 double-ended pump suction break using minimum safeguards.

The double-ended pump suction minimum safeguards case is normally limiting. The two phase results are provided for other cases to prove that an upper bound calculation has been performed. This information is not provided for the three-foot squared pump suction split or the double-ended cold leg or hot leg cases. The peak containment pressures for these cases will occur during the blowdown phase of the transient.

5. Equilibration and Depressurization Energy Release Data

The equilibration and depressurization energy release has been incorporated in the post-reflood mass and energy data. This eliminates the need to determine additional releases due to the cooling of steam generator secondaries and primary metal.

b. Mass and Energy Sources

The sources of mass considered in the LOCA mass and energy release analysis are given in the mass balance tables (Table 6.2-51, Table 6.2-52, Table 6.2-53, Table 6.2-54, Table 6.2-55 and Table 6.2-56). These sources are:

1. Reactor Coolant System
2. Accumulators
3. Pumped injection.

Likewise the sources of energy considered in the LOCA mass and energy release analysis are given in the energy balance tables (Table 6.2-57, Table 6.2-58, Table 6.2-59, Table 6.2-60, Table 6.2-61 and Table 6.2-62). These sources include:

1. Reactor Coolant System
2. Accumulator
3. Pumped injection
4. Decay heat
5. Core stored energy
6. Primary metal energy
7. Secondary metal energy
8. Steam generator secondary energy
9. Secondary transfer of energy (feedwater into the steam out of the steam generator secondary).

The balances are presented at the following times:

1. Time zero (initial conditions)
2. End of blowdown time
3. End of refill time (The only difference that will be noted from the values at the end of blowdown is that some accumulator water will be transferred to the reactor coolant. Thus, the low plenum will be full at the beginning of the reflood transient.)
4. End of reflood time
5. The time when the broken loop steam generator reaches thermal equilibrium (for froth cases only)

6. The time when the intact loop steam generator reaches thermal equilibrium (for froth cases only)
7. Time of full depressurization (for froth cases only).

The methods and assumptions used to release the various energy sources are given in Reference 11.

The following items ensure that the core energy release is conservatively analyzed for maximum containment pressure.

1. Maximum expected operating temperature
2. Allowance in temperature of instrument error and dead band (+4°F)
3. Margin in volume (1.4 percent)
4. Allowance in volume for thermal expansion (1.6 percent)
5. Margin in core power associated with use of engineered safeguards design rating (ESDR)
6. Allowance for calorimetric error (2 percent of ESDR)
7. Conservatively modified coefficients of heat transfer
8. Allowance in core-stored energy for effect of fuel densification
9. Margin in core stored energy (+15 percent).

c. Blowdown Model Description

The model used for the blowdown transient (SATAN-VI) is the same as that used for the ECCS calculation. This model is described in Reference 12 and 13. Reference 11 provides the method by which this model is used.

d. Refill Model Description

At the end of blowdown, a large amount of water remains in the cold legs, downcomer and lower plenum. To conservatively model the refill period for the purpose of containment mass and energy releases, this water is instantaneously transferred to the lower plenum along with sufficient accumulator water to completely fill the lower plenum. Thus, the time required for refill is conservatively neglected.

e. Reflood Model Description

The model used for the reflood transient (WREFLOOD) is a slightly modified version of that used in the ECCS calculation. This model is described in Reference 12 and 14. Reference 11 describes the method by which this model is used, and the modifications. Transients of the principal parameters during reflood are given in Table 6.2-63 and Table 6.2-64 for the double-ended pump suction break with minimum and maximum safeguards.

f. Post-Reflood Model Description (FROTH)

The transient model (FROTH) along with its method of use is described in Reference 8.

g. Single Failure Analysis

The effect of single failures of various ECCS components on the mass and energy releases is included in these data. Two analyses bound this effect.

No single failure is assumed in determining the mass and energy releases for the maximum safeguards case. For this case a failure must be assumed in the Containment Cooling Systems. Normally the limiting case is the loss of one spray pump. For the minimum safeguards case, the single failure assumed is the loss of one emergency diesel. This failure results in the loss of one pumped safety injection train. The analysis of both maximum and minimum safeguards cases assures that the effect of all credible single failure is bounded.

h. Metal-Water Reaction

In the mass and energy release data presented here, no Zr-$H_2$0 reaction heat was considered because the clad temperature did not rise high enough for the rate of the Zr-$H_2$0 reaction to be of any significance.

i. Energy Inventories

Energy inventories for primary and secondary systems are tabulated for hot leg, cold leg, and pump suction breaks in Table 6.2-57, Table 6.2-58, Table 6.2-59, Table 6.2-60, Table 6.2-61 and Table 6.2-62.

j. Additional Information Required for Confirmatory Analysis

System parameters needed to perform confirmatory analysis are provided in Table 6.2-65.

6.2.1.4 Mass and Energy Release Analysis for Postulated Secondary System Pipe Ruptures inside Containment

a. Mass and Energy Release Data

The mass and energy releases into the containment following a postulated main steam line break (MSLB) have been calculated by using the model described in Subsection 6.2.1.4d and incorporating the balance-of-plant parameters for Seabrook Station via the procedure described in Reference 15.

The effects of a postulated feedwater line rupture are not as severe as the main steam line break because the break effluent of a feedwater line rupture is at a lower specific enthalpy. Therefore, feedwater line break mass and energy releases to the containment are not addressed here since they are bounded by steam line break releases.

1. Break Type/Size and Operating Power

The plant operating power levels at the time of the MSLB and the spectrum of break types and sizes analyzed have been presented in Table 6.2-10 and Table 6.2-11, respectively. Full double-ended rupture (DER) area is determined by the integral flow restrictor area. This break represents the largest possible break. A small double-ended rupture has been considered for each power level. These break sizes have been chosen to be large enough to generate a steam line isolation signal from the Primary Protection System. For any ruptures smaller than these small double-ended ruptures, an isolation signal is generated by containment pressure. Two such cases have been analyzed with approximately half the corresponding size of the small double-ended rupture. These breaks are expected to cover adequately the full spectrum of double-ended break sizes. For the split ruptures, the break sizes selected are the largest sizes which will not generate a steam line isolation signal from the Primary Protection System. An isolation signal is generated on containment pressure. Larger split ruptures will generate primary protection signals and are expected to be bounded by the double-ended ruptures. The breaks are assumed to be at the exit of a steam generator flow restrictor for double-ended ruptures, and at any point on the piping between a steam generator and the first main steam pipe whip restraint inside the containment for split ruptures.

For full-size double-ended guillotine ruptures, the model allows credit for the flow-limiting effect of the MSIV (one for each loop) on the reverse flow blowdown. The reverse flow consists of (1) an initial blowdown of the steam in the piping between the break (immediately downstream of a steam generator flow restrictor) and the nearest MSIV, which is controlled by the piping cross-sectional area (4.18 ft^2); (2) a subsequent flow from the intact steam generators, which is controlled by the MSIV seat area (1.97 ft^2); and (3) a post-isolation piping steam blowdown. The initial piping blowdown is assumed at a constant choked flow rate corresponding to the initial pressure in the line. The flow from the intact steam generators, which is controlled by MSIV seat area, is conservatively calculated assuming a pressure decay curve for a break area smaller than the MSIV seat area for a given power level. Following isolation, the blowdown of the steam remaining in the piping (from the break up to the MSIVs of the intact steam generators for a single failure of a MSIV and up to the nearest MSIV for all other single failures) is calculated assuming the flow rate drops to zero linearly.

The post-isolation blowdown was calculated by following the procedure given in Reference 15 for the small double-ended breaks.

The reverse flow consists of (1) a reverse flow from the intact steam generators, and (2) a post-isolation piping steam blowdown, both controlled by the break size.

For split ruptures, isolation of the main feedwater and main steam lines is initiated when the containment pressure reaches 6.8 and 7.4 psig, which are the upper bounds of the isolation setpoints for the main feedwater and main steam. The time when this pressure is reached was found by computing the containment pressure-temperature response using blowdown data obtained by assuming no isolation. The analytical method and initial conditions for this calculation have been presented in Subsection 6.2.1.1. The correct blowdown in the period following isolation was then calculated by applying the calculated isolation time.

2. Fluid Inventory for Release

The total inventory of fluid available for release is characterized by the steam generator dryout time, which is defined as the time when the blowdown rate of the affected steam generator is equal to the rate at which the feedwater is entering. The dryout time depends on four steam/water sources: (1) initial steam generator mass, (2) mass added by feedwater flashing, (3) mass added by the Main Feedwater System, and (4) mass added by the Emergency Feedwater System. Item (1) is discussed in Subsection 6.2.1.4c. For Item (2), the actual water volume in the main feedwater piping between the affected steam generator and the valve effecting the isolation was used. Item (3) is obtained by integrating the transient flow rate over an appropriate time period. The flow rate was first obtained as a function of the pressure in the affected steam generator, considering the system resistance and characteristics of the various pumps. The pressure in the intact steam generators was assumed to remain unchanged during the transient. The main feedwater pumps were assumed to be operating at the maximum speed until they were tripped and all feedwater control valves (FCV) were assumed to be at their initial position, except the one in the broken loop which was assumed fully open, until their isolation is completed. It was assumed that the main feedwater pumps are immediately tripped upon receipt of the isolation signal, while all FCVs close instantaneously after a further delay equal to the maximum valve stroking time. The maximum stroking time of the feedwater isolation valves (FWIVs) and FCVs is discussed in Subsection 6.2.1.1. The pressure-flow relationship thus calculated was then converted to give the main feedwater flow rate as a function of time using the calculated pressure transient for the affected steam generator. Finally, Item (4) was obtained by multiplying the constant flow rate by the dryout time, or 30 minutes (time of isolation of the emergency feedwater line), as appropriate.

3. Mass-Energy Release Data for Most Severe Ruptures

The mass and energy releases have been calculated for the 102 accident-single failure combinations, as can be deduced from Table 6.2-10, Table 6.2-11 and Table 6.2-12. The mass flow rate and the enthalpy for the forward flow and the reverse flow for the case of maximum containment peak pressure (a full DE rupture at hot shutdown with one containment spray train failed) are given in Table 6.2-66 and Table 6.2-67, respectively. Similar blowdown information for the case of maximum containment peak temperature (a full DE rupture at 102 percent power with the broken loop MSIV failed) is given in Table 6.2-68 and Table 6.2-69.

b. Single Failure Analysis

The single failures postulated to concur with the MSLB have been presented in Table 6.2-12. Failure of a FWIV (Single Failue No. 1) increases the dryout time through Item (2) described in the previous subsection. The main feedwater available for flashing with and without this failure is 558.0 cu. ft and 160.5 cu. ft, respectively. Failure of a FCV (Single Failure No. 3) and failure of the main feedwater pump trip (Single Failure No. 4) increase the dryout time through Item (3) only, while failure of the emergency feedwater pump run out control (Single Failure No. 5) increases the dryout time through Item (4) only. Failure of the broken-loop MSIV (Single Failure No. 2) extends the steam volume available for the post-isolation piping blowdown to include the portion bounded by the MSIVs, the turbine stop valves (TSVs), the condensers, and the moisture separators/reheaters. The steam volume with and without this failure is 11907.1 cu. ft and 969.9 cu. ft, respectively. Failure of one of the two containment spray trains (Single Failure No. 6) results in a reduced containment heat removal rate, but has no effect on the blowdown.

c. Initial Conditions

A spectrum of power levels spanning the operating range, 102 percent, 75 percent, 50 percent, 25 percent, as well as the hot shutdown condition, has been considered. At each power level, plant initial conditions corresponding to the power level were assumed. Initial steam generator mass corresponding to the design mass limits was assumed.

Offsite power was assumed to be available. Specifically, this means no credit was taken for tripping of the reactor coolant pumps in determining the mass and energy releases. Tripping of the pumps reduces heat transfer capability from the primary plant into the steam generator, which reduces the effects of core power generation decay heat and thick metal energy and energy from intact steam generators on break releases. Further details of the initial conditions may be found in Reference 15.

d. Description of Blowdown Model

The steam generator blowdown model assumes dry steam. Details are available in Reference 15.

e. Energy Inventories

Mass and energy balances are provided in Table 6.2-69a and Table 6.2-69b for the most severe secondary pipe ruptures based on the highest peak calculated containment pressure and temperature.

f. Additional Information Required for Confirmatory Analysis

No additional information is deemed necessary for the performance of a confirmatory analysis.

6.2.1.5 Deleted

6.2.1.6 Testing and Inspection

Information concerning preoperational leakage testing and periodic in-service leakage surveillance of the containment to ensure functional capability of the containment and associated structures is provided in Subsection 6.2.6. Testing and inspection requirements for safety systems which support the functional capability of the containment and associated structures are discussed in the respective sections for the individual systems.

6.2.1.7 Instrumentation Requirements

Instrumentation is provided to monitor containment pressure, temperature humidity, hydrogen concentration, radiation levels and sump and flood water level to assist normal plant operations.

Instrumentation to monitor containment parameters for accident monitoring is discussed in detail in Section 7.5.

Containment post-LOCA radiation monitoring, area and airborne radioactivity monitoring instrumentation is discussed in detail in Subsection 12.3.4.

Containment post-LOCA hydrogen monitoring is discussed in Subsection 6.2.5.

6.2.1.8 Containment Analysis at an Analyze Core Power Level of 3659 MWt

As discussed in Section 6.2.1.1.a, the peak containment pressure and temperature predicted by the GOTHIC model for an analyzed core power level of 3659 MWt is bounded by the results of the original containment analysis performed using the CONTRAST-S-MOD1 program. This section provides a discussion of the results/data associated with containment response analyses of record, as shown on the applicable tables and figures in this section, as compared with the results/data associated with the containment response at the analyzed core power level of 3659 MWt.

a. Long-Term LOCA Containment Pressure and Temperature Response

The pressure and temperature time/histories shown in Tables 6.2-8, 6.2-9 and Figures 6.2-1 through 6.2-18 are based on the original and bounding containment analysis. A new GOTHIC code analysis was performed to baseline the original analysis and determine the impact of the analyzed core power level of 3659 MWt. The peak temperature and pressure values shown for the bounding EQ profile curves remain bounding or essentially the same at the 3659 MWt analyzed core power level. The actual calculated pressure and temperature values at the 3659 MWt analyzed power level vs. time differ slightly from the curves presented. The results show that the peak containment temperatures and pressures and the peak containment sump water temperature at an analyzed core power level of 3659 MWt are bounded by the peak values determined in the analysis of record.

The GOTHIC code analysis was based on a NRC approved methodology discussed in Topical Report DOM-NAF-3-NP-A (Ref. 30).

b. Long-term LOCA Mass and Energy Release Analysis

The data presented in Tables 6.2-37 through 6.2-64 and Figures 6.2-87 through 6.2-90, applicable to the containment response analysis of record, are essentially the same at the analyzed core power level of 3659 MWt for the following reasons: (1) The LOCA mass and energy release data used in the analysis of record are generic, whereas the mass and energy release data used in the analyzed 3659 MWt core power analysis were generated based on a Seabrook Station plant-specific model, (2) The decay heat model used in the generic data was based on American Nuclear Society (ANS) 1971 + 20%, whereas the 3659 MWt analyzed core power analysis was performed with ANS 1979 + 2σ, (3) In the 3659 MWt analyzed core power analysis, credit was taken for steam-water interaction in the Reactor Coolant System loop piping, which was not available when the generic data was calculated, (4) Credit was taken for a reduction in the core stored energy value due to internal margins, and (5) drift flux and break flow with inertia models were considered instead of a homogeneous model.

c. MSLB Containment Pressure and Temperature Response

The pressure and temperature time/histories shown in Tables 6.2-13 through 6.2-15 and Figures 6.2-20 through 6.2-23 are based on the original and bounding MSLB containment analysis. For the 3678 MWt NSSS analyzed thermal power level, a new GOTHIC based analysis was performed to baseline original analysis and determine the impact of the analyzed core power level of 3659 MWt. The peak temperature and pressure values shown for the bounding EQ profile curves remain bounding at the 3659 MWt analyzed core power level. The actual calculated pressure and temperature values at the 3659 MWt analyzed core power level vs. time differ slightly from the curves presented.

The limiting peak temperature for MSLB under 3659 MWt analyzed core power conditions is 357.4°F for a double ended rupture at 100% power with a single train failure. This is bounded by the existing peak containment temperature during a MSLB of 364°F.

The existing containment peak pressure following a MSLB is 36.1 psig determined for a double-ended rupture of the main steam line at hot standby power with failure of one spray train. This peak containment pressure determined for MSLB conditions is well below the peak containment pressure determined under LOCA following a full double-ended rupture of the reactor coolant pump suction piping with two trains of safety injection in operation.

The highest containment peak pressure based on 3659 MWt analyzed core power level conditions following a MSLB is calculated to be 37.3 psig for a doubled ended rupture at near zero power with failure of one diesel generator (i.e., one train). Peak containment pressure of 30.8 psig is developed for MSLB under 3659 MWt analyzed core power conditions for the double-ended rupture at 100% power with failure of one train. The current analysis of record was performed using mass and energy release data for a generic Westinghouse plant, whereas the results under the 3659 MWt analyzed core power level conditions are specific to Seabrook Station. Although the peak containment pressure resulting from MSLB under 3659 MWt analyzed core power conditions is slightly higher than that developed in the analysis of record, this value remains bounded by the peak pressure determined in the loss of coolant accident analysis.

d. MSLB Mass and Energy Release Analysis

The containment MSLB response analysis of record was performed using mass and energy release data for a generic Westinghouse plant (Tables 6.2-66 through 6.2-69b), whereas the 3659 MWt core power analysis uses the RETRAN computer code for determining the MSLB mass and energy releases, as well as inputs that are plant-specific for Seabrook Station. As indicated above, results of the 3659 MWt core power analysis show that the containment MSLB response analysis of record remains bounding for peak containment temperature; the peak containment pressure determined in the 3659 MWt core power analysis is bounded by the peak pressure determined in the containment LOCA response analysis of record.

6.2.2 Containment Heat Removal System

The containment is maintained below design pressure following a primary or secondary system line rupture by the parallel action of the Emergency Core Cooling System (ECCS) and the Containment Building Spray (CBS) System as active heat removal systems and by the passive heat sinks such as structural components. The ECCS is discussed in Section 6.3; details of the CBS system and the inter-relationship between the ECCS and CBS systems for removing heat from the containment are discussed in this section. Passive heat sinks, such as the containment liner and other structures, are described in Subsection 6.2.1.

6.2.2.1 Design Bases

a. The ECCS and the CBS system are each comprised of two identical trains, each train independent of the other and fully redundant. Failure of a single active component will not cause the loss of more than half of either system's 200 percent heat removal capacity. Sufficient capacity to mitigate the consequences of an accident is thus assured with one CBS train and one ECCS train available.

b. The reactor unit has its own CBS system and ECCS.

c. The CBS system is designed to remove the energy discharged to the containment following a loss-of-coolant accident (LOCA) or main steam line break (MSLB) to prevent the containment pressure from exceeding design pressure and to reduce and maintain containment temperature and pressure within acceptable limits. The postulated accident conditions for which the CBS performance is evaluated are discussed in Subsection 6.2.1.1.

d. The sources and amounts of energy released to the containment during accident conditions that determine the required capacities of the containment heat removal systems are discussed in Subsections 6.2.1.3 and 6.2.1.4.

e. Only minimum containment spray capacity (one train) is required for design heat removal. The containment energy removal rate is sufficient to reduce containment pressure so that leakage is reduced to one-half of the design leakage of 0.15 percent of the containment air mass per day within 24 hours after the DBA.

f. Assuming a loss of offsite power, the most limiting single failure is the failure of an emergency diesel generator to function leading to the loss of one safety train at the time of actuation. A detailed discussion of single active failures is presented in Subsection 6.2.1.3.

g. Components in the CBS system that are required to function during and subsequent to an accident are designated seismic Category I, and are designed to withstand the SSE without loss of function.

h. The capability of mechanical, instrumentation and electrical components in the containment heat removal systems to withstand the post-accident containment environmental conditions is discussed in Section 3.11.

i. Design of the CBS system to withstand the effects of wind and tornado loading, floods, and missiles is discussed in Sections 3.3, 3.4, and 3.5, respectively.

j. Components in the CBS system that are required to function during and subsequent to an accident are protected against the dynamic effects of pipe rupture, as discussed in Section 3.6.

k. Design of the CBS system to withstand the effects of floods is discussed in Section 3.4.

The contents of the RWST and SAT are required for the safe shutdown of the reactor and cooling of the containment following the rupture of primary or secondary coolant system piping in the containment. The water in the RWST and SAT is not required for reactor cooldown if there is no pipe rupture. The RWST and SAT are not protected from tornado wind loads and missiles since the simultaneous occurrence of a pipe rupture in the containment and a tornado is considered incredible.

6.2.2.2 System Design

The P&I diagrams of the ECCS and CBS system are shown in Figure 6.3-1 and Figure 6.2-74, respectively. Figure 6.2-75 is a complete flow diagram of all the Engineered Safety Feature Systems. The valves in Figure 6.2-75 are shown in their open position so that the same diagram can be used to represent all modes of operation. Design parameters for the CBS system components are listed in Table 6.2-75.

a. Operation

The CBS system is actuated by a containment spray actuation signal (CSAS), which is initiated by high pressure in the containment. The CSAS is discussed in Section 7.3. The CBS system pumps water from the refueling water storage tank (RWST) to the spray nozzles located high in the Containment Building. The RWST contains a minimum of 450,000 gallons of borated water at a maximum temperature of 98°F, and provides cooling for a minimum of 26 minutes after an accident, based upon maximum pumps in operation at maximum flow rates. Upon a low-low level signal from the RWST (approximately 350,000 gallons removed) in conjunction with an "S" signal, the suctions of the residual heat removal (RHR) and CBS pumps automatically re-align to take suction from the containment recirculation sumps. The operator then manually re-aligns the centrifugal charging pumps to take suction from RHR pump P-8A discharge and the safety injection pumps to take suction from RHR pump P-8B discharge. All pumps continue to operate in the recirculation mode until no longer required. Heat tracing is not required for the piping in this system since no part of the system is exposed to temperatures below 40°F.

b. Component Description

The following are descriptions of the components in the CBS system. RHR pumps and heat exchangers are described in Section 6.3 and Subsection 5.4.7; ECCS component descriptions are found in Section 6.3.

1. Containment Spray Pumps

The CBS pumps are horizontal centrifugal pumps selected to supply the design spray flow rate at containment design pressure. The pumps are designed to take suction from the containment sump at the most limiting NPSH condition (atmospheric pressure and a temperature of 212°F) and pump it back into the containment through the spray nozzles. Design pump discharge pressure takes into account containment pressure, elevation head to the highest nozzles, and piping frictional losses.

Each CBS pump is designed to deliver 3010 gpm from the lowest level in the RHR equipment vault to the highest point in the Containment Building. The minimum calculated CBS system flow rate of 2808 gpm during injection has been shown to be adequate to maintain the containment pressure and temperature within the design envelope for worst case primary and secondary side ruptures.

2. Spray Additive Tank

The spray additive tank (SAT) is mounted adjacent to the RWST, and drains by gravity into the RWST mixing chamber through a six inch diameter pipe which has redundant valving. This line connects the bottoms of the SAT with the RWST mixing chamber. External heaters are provided to prevent freezing or chemical precipitation during cold weather. The mixing ratio of the spray additive tank volume to the RWST volume is such that the pH of the spray solution during the injection phase will average between 9.0 and 9.6 units. The tank is sized to provide the correct amount of sodium hydroxide solution to insure that the final containment recirculation sump pH after injection will be between 8.5 and 11.0 units for the various reactor coolant conditions. No provision is made in the design of the SAT to prevent the reaction of NaOH with atmospheric carbon dioxide during long-term storage.

Proper concentration of sodium hydroxide between 19 and 21% by weight will be verified periodically by chemical analysis.

3. Containment Spray Heat Exchangers

The containment spray heat exchangers are shell and tube-type heat exchangers with spray flow in the tube side and primary component cooling water (PCCW) on the shell side. They are sized such that one containment spray heat exchanger and one residual heat removal heat exchanger provide 100 percent of design heat removal capacity.

Heat exchanger parameters, including flow rates, were selected so that one RHR heat exchanger and one CBS heat exchanger satisfy containment cooling requirements. Table 6.2-76 contains the heat exchanger performance data used for the accident analyses.

4. Spray Headers and Nozzles

The spray headers are positioned in the containment dome to maximize coverage of the containment volume. Four separate headers are used to obtain the distribution of the flow, two for each train. Each train contains 198 nozzles with each nozzle providing a design flow of 15.2 gpm (see Figure 6.2-76 and Figure 6.2-77).

5. Refueling Water Storage Tank

The refueling water storage tank (RWST) is designed to store 475,000 gallons of borated water. This tank is designed to supply water both for refueling operations and to the Containment Spray System and the Emergency Core Cooling System during accident operations. The RWST capacity is based on accident requirements and will supply the safety injection, the charging, residual heat removal and containment spray pumps for at least 26 minutes during the injection phase of a design base accident.

Margin is provided to allow time for transfer of the systems to the recirculation mode and to account for instrument errors. Analysis is based on a minimum of 350,000 gallons of water being injected. An external steam heating supply system is provided to protect against freezing. Tank temperature is indicated locally and alarmed in the main control room.

c. Material Compatibility

The components of the CBS system, including the spray nozzles, are fabricated of materials listed in Table 6.2-75.

The pH of the sump water following an accident is monitored to ensure that the pH is maintained in the correct range (discussed in part f. of this section) as the hydroxide is consumed by chemical reaction with zinc and aluminum within the containment. Two sample points exist to withdraw samples downstream of the RHR heat exchangers: the normal connection to the sample sink, and a local sample point. Sodium hydroxide can be added for pH adjustment using the chemical and volume control system tanks and pumps. The solution is prepared in the chemical mixing tanks and supplied to the suction of the charging pumps. The charging pump suction is fed from the RHR system during recirculation.

Neither the containment spray pumps or motors nor other engineered safeguard pumps or motors are exposed to the containment atmosphere; accordingly, no adverse effects are considered due to the post-accident containment environment.

d. Redundancy

Minimum allowable cooling capacity is assured by utilizing the "double train" concept in both the Emergency Core Cooling and the Containment Spray Systems. These trains are independent of each other, with no interconnection, so that a single active component failure will not cause loss of function of the system. An analysis of a failure of each component is presented in Table 6.2-77.

e. Recirculation Piping

There are two penetrations from the containment sump to the Primary Auxiliary Building (PAB), with each pipe encased in a sleeve. In each line, immediately inside the PAB, is a motor-operated gate valve. After passing through the isolation valve, the flow in each line divides to supply one CBS and one RHR pump. Each isolation valve is enclosed within a housing designed to withstand containment design pressure to prevent any leakage to the PAB atmosphere.

f. Containment Spray System pH Values

The pH of the system is dependent on the ratio of boric acid to caustic. The interaction of these two compounds has been investigated (References 17 and 18) and this data has been used to correlate containment spray composition and pH.

The 21 percent by weight sodium hydroxide in the spray additive tank, when mixed with the borated water in the RWST, nominally produces a pH of 9.6 or less during the injection phase. For maximum initial tank level mismatch, due to instrument uncertainties, the spray pH could exceed 10.3 for about 6 minutes.

The calculations of the spray pH range included such considerations as the physical piping arrangement between the additive and water storage tanks, variation in relative liquid heights in the tanks due to instrument uncertainties and permissible variations in the concentrations of sodium hydroxide in the spray additive and boron in the refueling water storage tanks. Since the UE&C computer program (MIXCH) used in the above calculations has successfully simulated the test data gathered in the testing of a similar gravity feed chemical injection system (Arkansas Nuclear One), a full-scale pH test is not considered necessary for Seabrook. This analysis technique (MIXCH) is detailed in Reference 23.

The maximum pH of the containment sump after a LOCA depends on the concentration of boron in the reactor coolant, i.e., the sump pH is 9.4 at zero ppm boron in the reactor coolant and 8.8 at a 4000 ppm boron concentration. Corrosion products in the solution have a tendency to slightly suppress the pH, generally to an extent less than 0.1 unit. In particular, for the composition of the containment sump water, the reduction in pH is expected to be even less (about 0.02 unit).

g. Net Positive Suction Head Requirements

Adequate net positive suction head is assured by locating the RHR and CBS pumps at the lowest level in the Auxiliary Building. The RHR and CBS pump available net positive suction heads from the containment sump were determined by assuming the limiting conditions in accordance with NRC Regulatory Guide 1.1 (pressure equal to atmospheric and temperature equal to 212ºF). The CBS pump available and required net positive suction head is shown in Table 6.2-75. The RHR pump available and required net positive suction head is shown in Table 6.3-1.

h. Heat Exchanger Surface Fouling

The materials used for the CBS heat exchanger are listed in Table 6.1(B)-1. The shell side of the heat exchanger is cooled by the PCCW system which contains a corrosion-inhibiting agent and operates as a closed system. The tube side, which is in contact with the emergency core coolant, is corrosion resistant. The effect of corrosion fouling on heat exchanger surfaces will, therefore, be minimal; however, fouling factors were included in the detailed design of the units to assure the required heat removal capability through conservative design.

i. Heat Exchanger Performance

The heat exchanger (residual heat removal, containment spray, primary component cooling water) temperatures have been selected based upon maximum service water (ultimate heat sink) temperatures and the amount of heat removal required. The flows, geometry, and surface area were studied in the evaluation of the containment pressure-temperature analysis. Those parameters selected and tabulated in Table 6.2-76 are those which meet the design basis requirement for containment cooling.

j. Containment Recirculation Sump and Strainer Design

The containment recirculation sump collects and strains the water available for supplying the residual heat removal, containment spray, safety injection and high head charging pumps during the recirculation mode of operation following an accident. The sump is designed to meet the intent of Regulatory Guide 1.82. Two completely independent sumps are located in the containment to maintain the "double train" concept as described in Subsection 6.2.2.2d.

One sump supplies water to Train A and the other sump supplies Train B. The arrangement of these sumps is shown in Figure 6.2-79. The minimum water level in containment during a loss-of-coolant accident is nominally Elevation (-)23.79 ft.

A series of debris interceptors are provided on the containment floor within the recirculation flow paths. The debris interceptors reduce the quantity of debris transported to the sumps by trapping debris and allowing the remaining debris more time to settle prior to reaching the sumps.

Heavy particles are prevented from reaching the sumps by sloping the surrounding floor away from the sumps. This facilitates settling of debris on the floor prior to reaching the sump area.

A strainer is installed in each sump. Each strainer consists of rows of vertically oriented strainer panels, consisting of a framework sandwiched between two sets of wire cloth attached to perforated plates. The maximum hole size of the perforated plates and maximum width of a gap between bolted structures is 0.068 inches. The strainer would therefore prevent debris particles 0.068 inches or greater in diameter which may be generated following a large break LOCA from passing through or bypassing the strainer and entering the ECCS system. The minimum physical restriction in the ECCS flow path consists of 0.073 inches, which is the effective opening of the fuel assembly debris filter bottom nozzle in combination with the P-grid. Therefore, the strainer will prevent recirculation of debris particles of sufficient size to impede cooling flow to the core.

The strainer panels are mounted on a plenum structure within the sump. The plenum is sealed to the sump floor and at the sump wall adjacent to the ECCS pipe inlet to ensure that all water entering the sump passes through the strainer panels. Water is drawn through the strainer panels and plenum and into the lower portion of the sump.

The strainer will also act as a vortex preventor to further preclude air intrusion into the ECCS piping.

The strainers have been designed to accommodate the debris generated and transported to the sump during the recirculation phase of a LOCA. The head loss due to debris on the strainer is less than the available NPSH margins for operating ECCS pumps, thereby ensuring that cavitation of the ECCS pumps will not occur. Therefore, the design meets the intent of Regulatory Guide 1.82.

The potential for clogging of the sump strainers by equipment and piping insulation or loose insulation in the containment is minimized by the type of insulation used.

The thermal insulation inside the containment for piping and equipment except the reactor pressure vessel is fiberglass blanket insulation of the type commercially known as Nukon, manufactured by Owen's-Corning Fiberglass. The outside surface of the insulation blankets is covered with a stainless-steel jacket or is encapsulated in stainless steel wire mesh. Nukon is consistent with the recommendations of Regulatory Guide 1.36. The reactor pressure vessel is insulated with stainless-steel reflective insulation or fiberglass blanket.

Clogging of the strainers by nonsafety-related equipment is unlikely due to the remote location of the sumps relative to the NNS equipment and physical barriers separating the sumps from other areas in the containment. The supplementary neutron shielding around the reactor vessel which could be displaced by blowdown forces during an accident is designed to remain anchored and intact; hence, it is not a potential source of strainer blockage during an accident.

The design of the sump suction piping ensures that adequate flow and net positive suction head are available to all pumps under the most limiting containment conditions, as required by Regulatory Guide 1.1. The two sumps and the pumps they service are designed so that any single active or passive failure will not cause the loss of both A and B Train components.

The sumps are visually inspected on a periodic basis to assure that they are clean, free of debris and that all strainers are intact and in position. The containment sump line isolation valves are exercised periodically to assure operability within Technical Specification requirements.

k. Periodic Testing

The provisions for periodic testing and inspection of the containment spray system are discussed in Subsection 6.2.2.4.

l. Applicable Codes, Standards and Guides

The codes, standards and guides applicable to the containment spray system are summarized in Table 6.2-79.

m. Remote Manual Operation of the Containment Building Spray System

The CBS system is designed to function completely automatically under accident conditions, hence there are no operations which must be performed manually by the operator from the main control board to initiate the proper function of the system during an accident. After the suctions of the CBS pumps are automatically switched over from the RWST to the containment recirculation sumps, the isolation valves (CBS-V2, CBS-V5) in the discharge line from the RWST will be closed by the operator.

n. Plant Protection System Signals and Setpoints

Operation of the CBS system is initiated automatically upon receipt of a containment spray actuation signal (CSAS). A CSAS is generated when the containment pressure reaches 19.8 psig (see also Subsection 6.2.1.1c.1(b)). The analysis limit of 19.8 psig is established by the requirement to maintain the maximum containment pressure during an accident as low as practical while keeping the setpoint as high as practical to minimize the probability of spray actuation following a small high energy line break. The Engineered Safety Features Actuation System is further described in Section 7.3.

o. Equipment Qualification

Components in the CBS system which are required to function during the accident are qualified (vendor certification) to verify the ability of the components to perform their intended functions under the conditions specified in the purchase documents and/or by test. Environmental qualification of safety-related equipment is discussed in Section 3.11. Tests and inspections are discussed in Subsection 6.2.2.4. Seismic qualification is addressed in Section 3.10. Pump and valve operability assurance is discussed in Subsection 3.9.3.2.

p. Containment Spray System Response Time

Containment spray system response time is discussed in Subsection 6.2.1.1c.

6.2.2.3 Design Evaluation

The analyses of the post-accident containment pressure transients are discussed in Subsection 6.2.1. The double train concept insures that sufficient heat removal capacity will exist, even with a single active failure. Containment design pressure is not exceeded and containment pressure reduction reduces containment leakage to 50 percent of the design leak rate within 24 hours after the DBA.

The refueling water storage tank and the spray additive tank are located within an enclosure building in the yard area. The RWST and SAT are fully enclosed with insulated siding and roof, as well as by two heated buildings (PAB and WPB). Included within these enclosures is the associated piping, vent lines, and instrument tubing.

During cold weather conditions, both the SAT and RWST are heated by steam heating panels mounted on the exterior surface of the tanks. Calculations demonstrate that the RWST heating panel can maintain a minimum water tank temperature of 50°F, and concurrently provide sufficient heat into the enclosure area to maintain an enclosure temperature of 39°F. No credit was taken for heat contributions from the SAT heaters. The site environmental condition for this design evaluation assumed -17°F and 30 mph winds, and are more conservative than the minimum outdoor conditions listed in Updated FSAR Figure 3.11-1.

For the above environmental conditions, the heat loss from the Enclosure Building, including infiltration losses, is 158,000 Btu/hr. as compared to an RWST heating panel capacity of 674,000 Btu/hr. Accordingly, freeze protection is provided for all equipment. In addition, both tank low temperature and enclosure temperature alarms are provided in the main control room.

The maximum temperature of the water in the tanks is calculated to be 86°F, using plant specific meteorological data, assuming maximum solar heat gain and failure of the ventilation fans. The heat of reaction upon the mixing of the boric acid and the sodium hydroxide would raise the temperature of the tank contents approximately 2°F, thereby raising the RWST maximum supply temperature to 88°F. Following a refueling operation, the RWST water temperature may reach a higher value. The maximum temperature considered for all evaluations is 98°F. Neither tank is protected against tornado missiles, and a tornado and accident are not considered simultaneous events. In the event of tornado damage to either tank, the affected unit would be shut down.

The SAT is connected to the RWST by two parallel lines each with an automatic motor-operated valve. The valves are actuated and powered from separate sources to insure that the NaOH solution can be added to the containment spray even in the event of a single active failure.

The method of addition of 20 percent NaOH solution in required concentrations to the borated water drawn from the RWST immediately following a LOCA is primarily dependent on passive components, such as tanks, pipes and a baffled mixing chamber. The rate of addition is dependent on the drawdown rate of the RWST and is based on principles of hydrostatics and hydrodynamics. A description of the system is contained in the following paragraphs.

The system outlined here was chosen in preference to other available systems because it relies upon a minimum number of active components for adding and mixing the NaOH with the borated water and therefore is not dependent on the proper operation of active components (such as eductors and associated recirculation valves, etc.), to achieve the required mixing ratio. Addition of NaOH to the borated water is accomplished by gravity feed through a 6" pipe connecting the SAT and RWST which together remain in hydrostatic equilibrium throughout the period of ECCS injection into the core and the containment atmosphere.

A mixing chamber is provided inside the RWST to thoroughly mix the NaOH with the borated water supplied to the containment spray system by the RWST.

The redundant motor-operated isolation valves between the SAT and the RWST are normally closed and are automatically opened by the containment spray actuation signal. Once these isolation valves are open, the SAT draws down simultaneously with the RWST as the residual heat removal, safety injection, charging and containment spray pumps withdraw water from the RWST. The operating levels of the SAT and RWST are maintained during normal operation to ensure that the two tanks are in hydraulic equilibrium. Since the two tanks are in hydraulic conjunction with each other, they remain in hydrostatic equilibrium throughout the injection phase.

The Containment Spray Actuation System and power supplies are independent and redundant to ensure actuation and power in the event of a single failure. An analysis of possible failures is presented in Table 6.2-77.

a. Passage of Spray Water to the Recirculation Sumps

The containment spray water is distributed over the operating floor at elevation 25' and is then directed to one of three different flow paths to the containment sump. Water holdup is minimized by grated floors and adequate openings in compartment walls and shielding to allow passage of water to the recirculation sumps, as described below:

1. The operating floor has 3520 ft^2 of grating which will pass the spray directly to the lower floor at elevation 0'-0". Spray that impacts and collects on the solid floor at this elevation will freely drain to the grated floor areas. Elevation 0'-0" has 1270 ft^2 of grating which will allow the water draining from above to drain to elevation -26' where the spray will drain to the recirculation sump.

2. The steam generator shielding extends above the operating floor to elevation 32 ft. The top of these shielded cubicles is open to collect spray. However, this path is open to elevation -26 ft and the spray will drain directly to the sump.

3. There are openings in the reactor operating floor for the refueling canal, reactor internals lay down and access to the reactor head region. Eventually, all spray impacting this area drains to the annular region between the reactor vessel and the concrete primary shield wall. This area is not isolated during normal plant operation. Low elevation portions of the refueling canal (See Figure 1.2-6) will drain to the -26' elevation through three four-inch lines each having two valves in series, normally open, but both closed during refueling connected to a common drain path. Each drain path is isolated by two valves in series during refueling.

Adequate openings have been provided in the missile shield walls to allow free passage of water at elevation -26' to the recirculation sump.

The maximum total trapped volume of spray water is 22,830 ft^3 (170,780 gal). See Subsection 6.2.1.1b.6 for details. This is significantly less than the 46,788 ft^3 (350,000 gal) of water supplied from the RWST.

b. Changeover from Injection to Recirculation

The changeover from the injection mode to the recirculation mode during an accident is described in Subsection 6.3.2.8. The containment spray pumps function the same as the RHR pumps during the changeover.

Upon reaching a low-low level in the RWST, the recirculation mode of operation is automatically initiated. The two containment sump isolation valves are automatically opened when the low-low level signal in the RWST is indicated in conjunction with an "S" signal. This valve opening realigns the suction of the containment spray pumps to the sumps for the start of recirculation. The containment spray pumps continue to operate during this switchover. After the switchover is completed, the isolation valves in the discharge line from the RWST are closed by the operator.

Each of the containment spray subsystems is capable of satisfying the system function and either can be removed from service. A single failure does not prevent the transfer to the recirculation mode since each active component is duplicated by the dual train concept.

c. Spray Effectiveness

Each spray train contains 198 SPRAYCO 1713A hollow-cone ramp bottom nozzles. Sixty-five nozzles were randomly selected from a quantity of 325 to evaluate the performance of the nozzles and verify the required flow of 15.2 gpm at 40 psi differential pressure. The average mean droplet diameter for the nozzles tested was 660 microns. This compares to a conservative value of 1250 microns used in the containment iodine removal analysis. The average mean drop diameter was arrived at by numerical averaging based on an instantaneous sampling of spray at design conditions.

Table 6.2-80 lists the percentage of sprayed volume and Figure 6.2-80 and Figure 6.2-81 show the extent of overlapping of the sprays in plan for spray loops A and B, respectively. These figures show virtually 100 percent coverage of the containment at the operating floor level. Figure 6.2-82 and Figure 6.2-83 show the spray loops A and B coverage pattern in elevation views.

Figure 6.2-84, Figure 6.2-85 and Figure 6.2-86 summarize the operating characteristics of the spray nozzles at 40 psi. It should be noted that 99.99 percent of the drops are below a diameter of 1500 microns, have a terminal velocity less than 17.88 fps and contain over 99.99 percent of the total liquid volume. It is assumed that, following a LOCA, the sprays are initiated at a time when the containment atmospheric temperature is 266°F, so that the air steam ratio is 0.78 pounds air per pound steam and the initial spray temperature is 100°F. The drop is considered to be a rigid sphere of radius r_o initially at T_o in an air/steam atmosphere at T_{oo}, and T_{oo} does not change during the time the drop is falling. Steam in contact with the drop will condense, leaving a boundary layer of air around the drop. This is equivalent to having an extremely large air-steam mass ratio, essentially 100 percent air and 0 percent steam. It is also conservatively assumed that this boundary layer is created instantaneously. Heat is transferred to the drop through the boundary layer by convection, and water vapor diffuses through the boundary layer. Ranz and Marshall (Reference 19) provide correlations for both mass and heat transfer. After diffusing through the boundary layer, the steam will condense on the drop surface and the latent heat of condensation will act as a surface heat source.

The assumption of a rigid drop implies the longest time for the drop to heat up, thus providing the most conservative case.

The following equations were used in the analysis:

$$\frac{1}{\rho^2}\frac{\partial}{\partial\rho}\left(\rho^2\frac{\partial\tau}{\partial\rho}\right)=\frac{\partial\tau}{\partial\theta} \tag{1}$$

$$\frac{k_g}{D_V}\frac{P_{BM}}{P}\frac{M_m}{}\frac{RTr_o}{}=1+0.3(Re)^{1/2}(Sc)^{1/3} \tag{2}$$

$$\frac{hr_o}{k}=1+0.3(Re)^{1/2}(Pr)^{1/3} \tag{3}$$

where

$$\tau = \frac{T\infty - T}{T\infty - T_o}$$

$$\theta = \frac{\propto t}{r_o^2}$$

$$\rho = r / r_o$$

$$\mathrm{Re} = \frac{2 V_t r_o \rho_a}{\mu_a}$$

$$V_t = 0.153\, g^{0.714}\, D_p^{1.142} \left(\rho_p - \rho_a\right)^{0.714} / \rho_a^{0.286}\, \mu^{0.428}$$

and $D_p = drop\ diameter$

$\rho_a = density\ of\ drop$

$\rho_p = density\ of\ mixture$

$\mu = vis\cos ity$

$g = acceleration\ of\ gravity$

$K_g = mass\ transfer\ coefficient$

$V_t = thermal\ velocity\ of\ the\ drop$

$R = gas\ cons\tan t\ for\ mixture$

$P = total\ pressure\ of\ mixture$

$\propto = thermal\ diffusivity\ for\ mixture$

$t = time$

$P_{BM} = average\ pressure\ of\ inert\ in\ boundary\ layer$

$M_m = average\ molecular\ weight\ of\ boundary\ layer$

$D_v = diffusivity\ of\ water\ vapor$

$h = heat\ transfer\ coefficient$

$k = thermal\ conductivity$

Re, Pr, Sc =Reynolds, Prandtl and Schmidt numbers

Equation (1) describes the temperature behavior of the drop; equation (2) describes the mass transfer coefficient; and equation (3) the convective heat transfer coefficient at the drop boundary.

Parsly (Reference 20) has solved this set of equations numerically using a finite difference method for a range of drop sizes from 500 to 4000 microns in diameter, containment temperatures of 212°F and 266°F, and initial drop temperatures of 86°F, 122°F and 176°F. Using these results for an average spray nozzle height of 134 feet and initial drop temperature of 100°F, equilibration time is much shorter than the time required for the drops of essentially all sizes to reach the containment sump. Table 6.2-81 presents the parametric results.

It can be concluded from Table 6.2-81 that even the largest spray drops attain the containment temperature at times far shorter than the time required to reach the containment sump. As a result, the spray effectiveness value of 1.0 is fully justified in the case of a LOCA. The effectiveness of the sprays following an MSLB, when the containment atmosphere is superheated, is discussed in Appendix 15B.

d. Net Positive Suction Head Available

Adequate net positive suction head (NPSH) for the containment spray pumps is assured under all postulated operating conditions by analysis of the suction head available and vendor testing of the completed pumps.

Maximum calculated flow under the most limiting NPSH conditions, i.e., during recirculation, is 3660 gpm. NPSH available at this flow is 23.76 feet versus a maximum required NPSH of 23.6 feet. The CBS pump analysis of available NPSH conservatively assumes that each residual heat removal pump (which shares a common suction on a train basis with each CBS pump) is also operating at design cold leg recirculation flow of 4388 gpm and considers the suction flow path with the highest hydraulic resistance. The formulas and flow resistance data in Reference 21 were used, along with GE strainer test data, to compute NPSH available.

Table 6.2-78 lists the values of containment pressure head, vapor pressure head of pumped fluid, suction head, and friction head used in the analysis.

e. Integrated Energy, Content of the Containment Atmosphere and Recirculation Water

Figure 6.2-87 and Figure 6.2-88 show the integrated energy content of the containment atmosphere and recirculation water, respectively, as functions of time following the postulated design basis loss-of-coolant accident. The integrated energy absorbed by the structural heat sinks and removed by the containment heat removal heat exchangers is shown in Figure 6.2-89 and Figure 6.2-90, respectively.

f. Debris

The major source of debris that could be generated during a loss-of-coolant accident is insulation. The thermal insulation being used inside the containment will be both stainless steel reflective insulation and fiberglass insulation of the type commercially known as Nukon, manufactured by Owen's-Corning Fiberglass, with a stainless steel jacket over the outside surface of the insulation. Nukon is consistent with the recommendations of Regulatory Guide 1.36.

6.2.2.4 Testing and Inspection

The preoperational testing of the containment heat removal system verified the functional capability of the individual systems under operational conditions.

Testing and inspection of the ECCS systems is discussed in Section 6.3 and Chapter 14.

The preoperational testing of the Containment Spray System verified the operational parameters of the spray pumps during recirculation to the RWST. This testing included a demonstration of system response to ESF signals and the ability of the sump to supply the containment spray and residual heat removal pumps. Flow testing of the nozzles was performed by the manufacturer and was not performed in the field. An air flow test was performed to verify that no nozzles are plugged.

Operability of the gravity feed system was demonstrated during preoperational testing of the ECCS Performance Test (Table 14.2-3, Item 8). The preoperational test will demonstrate the draw-down characteristics of the RWST and SAT during the different flow conditions of the ECCS Performance Test.

The Containment Spray System will be inspected and tested periodically in accordance with the requirements of the ASME Boiler and Pressure Vessel Code, Section XI and the requirements of the Technical Specifications.

The containment recirculation sumps will be visually inspected periodically to insure that they are free of debris and all strainers are intact.

6.2.2.5 Instrumentation

The Containment Heat Removal System is provided with instruments and controls to allow the operator to monitor the status and operation of the spray system and to allow the automatic or manual initiation of the injection and recirculation modes of operation.

The manual spray actuation consists of four momentary controls (see Figure 7.2-1, sh.8). Actuation occurs only if two associated controls are operated simultaneously. This prevents inadvertent spray initiation as a result of operator error. The automatic initiation is by coincidence of 2 out of 4 protection set loops, monitoring the containment pressure. The spray actuation signal starts the containment spray pumps and positions all valves to their operating configuration. The design details of the Engineered Safety Features Actuation System are presented in Section 7.3.

The details of the interlocks involved in the suction valve realignment from the RWST to the containment sump during the switchover from injection to recirculation mode are presented in Table 6.3-7. RWST instrumentation is discussed in Subsection 6.3.5. Indications of pump operation are provided by pump status indication lamps and the pressure indications at the main control room. Alignment of automatic valves is indicated by the valve status indications. Additionally, a separate status monitoring indication system is provided at the control room for both modes of the spray system. This enables the operator to evaluate the extent to which the valves are open and if the system is operating effectively. Alarms are also provided to indicate that either train of the Containment Spray System is inoperative. The design features of the bypass and inoperable status alarm system which provide system level indication, in compliance with Regulatory Guide 1.47, are presented in Subsection 7.1.2.6.

Abnormal conditions of RWST level and temperature, RWST enclosure temperature, containment sump level, pump discharge pressure, pump motor temperatures, and heat exchanger outlet temperature are alarmed at the main control room to alert the operator. The design details of the Accident-Monitoring Instrumentation System are presented in Section 7.5.

The Control and Display Instrumentation System is designed to operate under all normal and abnormal conditions, including loss-of-coolant accident and loss of power. Diversity, redundancy of the sensors, circuitry and actuating devices meet the requirements of IEEE-Standard 279 and ensure that minimum system function is provided under postulated abnormal conditions. No single failure of the control and instrumentation will prevent the spray system minimum safety function. The design details of the instrumentation system are presented in Section 7.1.

A comparison of the containment water level instrumentation design with each of the five clarification points of NUREG-0737, Position II.F.1.2, (Page II.F.1.16), is addressed below:

a. The Seabrook design for containment water level complies with this requirement. Refer to clarification c. below for a discussion of the narrow range qualification.

b. The wide-range level measurement is designed to monitor water levels that correspond to all the water from the primary and safety systems and one-half the condensate storage tank. This capability exceeds a liquid volume of 600,000 gallons.

c. The narrow-range water level monitors are not required to operate after their respective sumps have been flooded as their function is to monitor operational leakage. They will only be exposed to a mild environment as any leakage that would cause a harsh environment would flood their sumps and would be detectable by the wide-range (recirculation) sump level indicators and instruments monitoring the containment atmosphere.

   The narrow-range containment sump level instrumentation will be covered by the maintenance/surveillance for equipment that is located in a mild environment.

d. This requirement is not applicable to Seabrook.

e. The functions of the wide-range level indication are:

   1. Verify the existence of water in the containment as corroboration of detection of a LOCA
   2. Verify that the water injected from the RWST is accumulating in the containment
   3. Verify that there is adequate NPSH for the containment spray pumps
   4. Verify that the containment water level is less than the design basis flood level.

   The accuracy of this indication has been determined, has been reviewed against the functions listed above, and has been found acceptable to support each function.

6.2.3 Secondary Containment Functional Design

The function of the secondary containment (containment enclosure) is to collect any fission products which could leak from the primary containment structure into the containment enclosure and contiguous areas following a loss-of-coolant accident (LOCA). The containment enclosure provides a low leakage rate barrier between the containment and the environment to control all leakage from the containment boundary. The system is comprised of (a) a structural barrier surrounding the containment, adjacent vaults and penetration areas; and (b) a containment enclosure emergency cleanup system which maintains a pressure lower than ambient in the enclosure to prevent uncontrolled releases of radioactivity into the environment.

6.2.3.1 Design Basis

a. Containment Enclosure

1. The containment enclosure is designed for 3 psig differential pressure.
2. The containment enclosure is designed to withstand the transient pressure and temperature conditions produced in the annulus between the containment and the enclosure as a result of either a LOCA within the containment or a high-energy pipe rupture within the containment enclosure annulus.
3. The containment enclosure is capable of withstanding the external pressure conditions resulting from the maximum wind pressure postulated for the site, the external pressure drop resulting from a tornado, and tornado-generated missiles.
4. The containment enclosure is designed to withstand a safe shutdown earthquake.

b. Containment Enclosure Emergency Cleanup System

1. The system is capable of reducing the containment enclosure pressure to negative 0.25 inches w.g. (water gauge) following an accident and maintaining it at or below that level uniformly for up to one year.
2. The system is capable of processing the atmosphere of the containment enclosure space while maintaining the design negative pressure differential.
3. The system is designed to permit periodic inspection and monitoring of functional capability.
4. This system is designed in accordance with Regulatory Guide 1.52.
5. The system is designed to seismic Category I and Safety Class 2 requirements.
6. The system is designed to retain functional capability while experiencing a loss of offsite power concurrent with a LOCA and any single active component failure.

6.2.3.2 System Design

a. Containment Enclosure

The containment enclosure is comprised of a right cylindrical structure with a hemispherical dome and other penetration and equipment areas as described in Table 6.2-82. These structures completely enclose the containment, forming a second barrier to the uncontrolled escape of radioactive sources in the event of an accident. The inside diameter of the cylinder, constructed of reinforced concrete, is 158 feet. The vertical wall varies in thickness from 15 to 36 inches, and the dome is 15 inches. The inside of the dome is 5'-6" above the top of the containment structure. Design and performance data are listed in Table 6.2-82. The annular cylinder formed by the containment and the enclosure is shown on Figure 1.2-2, Figure 1.2-3, Figure 1.2-4, Figure 1.2-5 and Figure 1.2-6. Codes, standards and guides applied in the design of this structure are discussed in Subsection 3.8.4.2.

b. Features in Support of the Containment Enclosure

All piping penetrating the containment structure is sealed and anchored at the containment structure and at the containment enclosure so as not to be overstressed by thermal or seismic-induced motion. Electrical penetrations are sealed and anchored at the containment structure.

The containment recirculation sump lines are enclosed in a sleeve which extends out to a vessel which encloses the first isolation valve outside the containment. This enclosure serves to contain any leakage from the sump line and first isolation valve.

The containment enclosure isolation features are discussed in Subsections 9.4.6.2 and 6.5.1.

All personnel doors and equipment hatches in the containment enclosure are under administrative control. The doors are provided with position indicators and alarms having readout and alarm capability at the primary and secondary alarm stations. These doorways and hatches must be closed to insure a negative pressure in the containment enclosure.

c. Containment Enclosure Emergency Cleanup System

This system has two functions: (1) to produce a negative pressure post accident in the annular, cylindrical volume between the containment and the containment enclosure, and (2) to collect any hazardous materials that might leak into these areas from the containment structure or equipment/systems located within the enclosure (ECCS) so that they may be disposed of in a controlled manner. Both these functions are performed by redundant filter trains, redundant fans, dampers and controls, and a common discharge ductwork system to the unit plant vent.

Each exhaust fan has a sufficient capacity, with a clean and dirty filter train, to remove the in-leakage into the entire containment enclosure area calculated to occur at the design negative differential pressure, maintaining the required differential pressure. Subsection 6.2.3.3a discusses the performance of the fans. The presence of the containment enclosure and the use of the exhaust fans to produce a slightly negative pressure between it and its external surroundings minimize the direct leakage from the containment structure to the environment.

The redundant filter trains contain moisture separators, upstream HEPA filters, carbon adsorber bank and a downstream HEPA filter bank. The use of HEPA and charcoal filters in the exhaust from the containment enclosure reduces the discharges of radioactive iodine so that offsite doses following a LOCA are within the guidelines of 10 CFR 100.

All components of the Containment Enclosure Emergency Cleanup System required to operate following an accident are Safety Class 2, seismic Category I. The system does not have provision for recirculation flow. Additional details are presented in Subsections 6.5.1 and 6.5.3.

d. Containment Enclosure Bypass Leakage

The maximum allowable leakage from the containment structure following an accident is 0.15 percent of the mass of its atmosphere per day. This would occur at maximum pressure. During the first 24 hours following a LOCA, the containment heat removal systems reduce the pressure, the driving force behind the leakage, to less than one-half the maximum value. As discussed in the preceding section, the direct leakage to the environs of radioactive contaminants from the containment is within the guidelines of 10 CFR 100.

Although, as discussed in the preceding section, a containment enclosure emergency cleanup system has been provided to minimize leakage to the environs, a significant number of lines penetrate the containment and terminate in areas not treated by this cleanup system. Therefore, all leakage attributed to penetrations and isolation valves, requiring Type B and Type C Test per 10 CFR 50, Appendix J, is conservatively assumed to bypass the cleanup system. The total allowable leakage for Type B and Type C Tests and for combined bypass leakage is discussed in Subsection 6.2.6.3. This is in accordance with Appendix J acceptance criteria.

6.2.3.3 Design Evaluation

The containment enclosure system design is evaluated from two viewpoints. Subsection 6.2.3.3a investigates the adequacy of the structure and associated equipment to achieve its functional goal, a negative pressure differential. Subsection 6.2.3.3b considers the vulnerability of the system to damage from a high-energy line rupture within the enclosure.

a. Containment Enclosure Analyses

One train of the Containment Enclosure Emergency Cleanup System is required to be able to draw down the entire Containment Enclosure Area to a negative differential pressure of 0.25 iwg. This differential pressure is required to be established between all areas that comprise the Containment Enclosure Area and their external surroundings. The areas that comprise the Containment Enclosure Area are listed in Table 6.2-82. This negative differential pressure has to be established within 8 minutes following a LOCA. The radiological dose analyses for a LOCA described in Section 15.6.5.4 begins to take credit for filtration of radioactive contaminants that leak into the Containment Enclosure Areas at 8 minutes following an accident. Per Appendix 15B, no credit is taken for filtering out any of the radioactive contaminants released into the Containment Enclosure Areas for the first 8 minutes following an accident. The filter removal efficiencies are set at 0 during this time.

Analysis has shown that one containment enclosure exhaust filter fan is capable of drawing down the entire containment enclosure area to the design negative differential pressure in less than 8 minutes after the initiation of a design basis LOCA. This analysis takes into account the engineered safety feature actuation system signal delay time, delay time for the diesel generator to supply power in the event of a simultaneous loss of offsite power, and the time for the filter fan to come up to speed.

In the event of a LOCA, the containment could experience an increase in volume on the order of 11,500 cubic feet because of thermal and pressure expansion. This is determined using the data listed in Table 6.2-82, and considers the swelling of the containment structure due to the design pressure of 52 psig. This would result in a decrease in the free volume of the Containment Enclosure Building of less than 1 percent with a similar corresponding rise in its pressure. The time for an exhaust filter fan to bring the Containment Enclosure Area back down to atmospheric pressure to compensate for the swelling of the containment structure is included in the analysis of the Containment Enclosure Area draw down time.

The analysis also includes the time required for an exhaust filter fan to reduce the Containment Enclosure Area to the required negative differential pressure. A separate analysis has determined that it is necessary to establish a negative differential pressure of 0.685 iwg at the 21' -0" elevation of the Containment Enclosure Ventilation Area. This will ensure that a negative differential pressure of 0.25 iwg exists at the top elevation of the Containment Enclosure for the full range of design basis outside ambient temperatures. The draw down analysis conservatively includes the time required for one filter exhaust fan to remove enough air to draw down the entire Containment Enclosure Area to an internal pressure of negative 0.685 iwg.

The analysis to verify this draw down time also takes into account a total calculated maximum in-leakage of 1025 cfm. This is the in-leakage through various air flow paths such as electrical, piping and duct penetrations, concrete structure, construction joints, doors, seal plates, metal partitions, ducts and floor drains. Air in-leakage was determined using data from the penetration sealant supplier, analytical calculation and experimental leakage data provided in "Conventional Buildings for Reactor Containment NAA-SR-10100 (1965)," issued by Atomics International, a Division of North American Aviation Incorporated. For conservatism, this in-leakage is calculated at the maximum differential pressure of 0.685 iwg. The calculated maximum in-leakage also includes leakage from the primary containment at a rate of 0.2% of the primary containment volume for the first day following a design bases LOCA. This assumption is conservative because primary containment leakage is limited to 0.15 percent by weight. This analysis also assumes a low airflow of 1890 cfm from a single fan. This is the minimum value acceptable during system surveillance testing. When all of these factors are taken into account, one filter exhaust fan is still capable of achieving the design negative differential pressure in less than the required design basis draw down time of 8 minutes.

Test or sampling connections in lines penetrating both the containment and containment enclosure are protected by either two isolation valves or by a locked-closed valve and one isolation valve so that no single failure can compromise the ability to achieve negative pressure by allowing a source of suction fluid to the exhaust fans other than the atmosphere of the containment enclosure.

The analyses of the pressure/temperature response of the containment to a LOCA, performed for Subsection 6.2.1, have demonstrated that there is never any significant change in the temperature on the outside of the containment wall. Accordingly, the temperature in the containment enclosure is determined by the heat generated by the equipment present inside it and energy removal by the containment enclosure cooling units which function both during normal plant operations and in the event of a LOCA. The cooling coils have been sized to continuously maintain the temperatures, in the areas to be cooled, for normal, abnormal and accident conditions as discussed in Section 3.11(B).

b. High Energy Line Rupture

The main steam, feedwater, and steam generator blowdown lines pass through the containment enclosure, but not directly. The enclosure boundary terminates on the fluid portion of the penetration for these pipes on main steam tunnel sides. The residual heat removal line also passes through the containment enclosure, but is classified as a moderate energy line because of its short operational period. Therefore, ruptures of these lines within the containment enclosure are not considered.

Failure of a high-energy line would result in pressurization of the containment enclosure due to the mass and energy release. The high-energy lines that penetrate the containment and traverse the Enclosure Building without guard pipes are:

1. Sample lines from the pressurizer
2. Sample lines from reactor coolant loops
3. Excess letdown line
4. Letdown line.

The sample lines (items 1 and 2 above) are normally isolated, and are only opened daily for short duration to purge the line and collect samples. Since such lines are under the direct control of the operator taking samples, their failure could be immediately detected by lack of pressure at the sample sink, and isolation effected by the operator. Also, the sample line isolation valves will automatically close on a containment isolation "T" signal.

The excess letdown line (item 3 above) is normally isolated. During operation, the liquid letdown is cooled to approximately 165°F by primary component cooling water in the excess letdown heat exchanger. Accordingly, the failure of this line within the containment enclosure is less severe than for the normal letdown line. The flow rate in the excess letdown line, when in use, is approximately 2100 lb/min of subcooled water.

Because of the mitigating factors associated with the rupture of other lines, a complete double-ended guillotine break of the 3-inch letdown line (item 4 above) becomes the design basis accident for the pressurization of the containment enclosure.

This break is also the most severe small line rupture outside containment from the standpoint of radiological consequences, and is discussed in Subsection 15.6.2. As described there, this break leads to a flow of 140 gpm of water at 380°F (having been cooled from 560°F by the regenerative heat exchanger) for a period of less than 30 minutes, by which time the operator will have isolated the rupture. With the secondary containment at 104°F, 10 percent relative humidity, and atmospheric pressure, the water flashes at the break into a steam-water mixture which would pressurize the containment enclosure to 1.5 psig within the first half hour. Whenever the flow is terminated, the pressure would begin to drop. No credit is taken for ventilation and purging, and only the containment enclosure annulus free volume was available for pressurization for conservatism. The design pressure for the containment enclosure structure is 3 psig.

6.2.3.4 Tests and Inspections

Preoperational testing of the containment enclosure and its associated exhaust system is discussed in Subsection 6.5.1.4 and Chapter 14.

Periodic testing of the containment enclosure exhaust fans is discussed in Subsection 6.5.1.4. This periodic testing will also include a visual surveillance of containment enclosure penetration and other seals.

6.2.3.5 Instrumentation Requirements

The system monitoring instrumentation and controls are provided in the main control room. Instrumentation associated with the Containment Enclosure Emergency Cleanup System is described in Subsection 6.5.1.5. The system is automatically initiated on a 'T' (containment isolation phase A) signal. The Engineered Safety Features Actuation System is described in detail in Section 7.3. The logic, controls and instrumentation of this engineered safety feature system function so that a single failure of any component will not result in the loss of functional capability for the system. Further information on safety-related instrumentation is included in Chapter 7. Area radiation and airborne radioactivity monitoring instrumentation details are presented in Subsection 12.3.4.

6.2.4 Containment Isolation System

The Containment Isolation System is comprised of the valves, piping and actuators required to isolate the containment following a LOCA or steam line rupture. The systems establish and/or maintain isolation of the containment from the outside environment to prevent the release of fission products, and to ensure that the public is protected in accordance with 10 CFR 100 guidelines.

Each piping penetration of the containment, except penetrations associated with engineered safety features equipment, is required to maintain or establish isolation of the containment under any loss-of-coolant accident or main steam pipe rupture that will initiate the containment isolation signals.

6.2.4.1 Design Bases

The design bases for the containment isolation system are as follows:

a. Minimize and limit the atmospheric release of radioactive materials in the event of a LOCA by isolating those lines penetrating the containment which are not required for the operation of the engineered safety feature systems.

b. Avoid the reactivity effects that could result from excessive cooldown of the Reactor Coolant System in the event of a steam line break accident, and prevent the overpressurization of the containment during such an occurrence by isolating the containment as well as the steam generators, as may be required to fulfill these objectives.

c. Provide double barrier protection for all lines that penetrate the containment, where a barrier may consist of a valve, a closed system, or a diaphragm depending upon its location and application.

   A closed system is one which satisfies all of the following requirements:

   1. The system does not communicate with either the Reactor Coolant System or the containment atmosphere.
   2. The system is protected against missiles and pipe whip.
   3. The system is designated seismic Category I.
   4. The system is classified Safety Class 2.
   5. The system is designed to withstand temperatures at least equal to the containment design temperature.
   6. The system is designed to withstand the external pressure from the containment structural acceptance test.

7. The system is designed to withstand the environment and transient conditions resulting from either a loss-of-coolant accident or a main steam line break.

   Sealed-closed barriers which replace automatic isolation valves include blind flanges and locked-closed isolation valves. These barriers, which remain closed after a LOCA, will be managed through administrative controls.

d. The containment isolation system design shall comply with the requirements of 10 CFR 50, Appendix A, General Design Criterion 54, and other applicable criteria as follows:

   1. Lines that are part of the reactor coolant pressure boundary and penetrate the containment, or are connected to the containment atmosphere, have their penetrations designated as Type I and are provided with valves as follows:

      (a) One locked-closed isolation valve inside and one locked-closed isolation valve outside containment; or

      (b) One automatic isolation valve inside and one locked-closed isolation valve outside containment; or

      (c) One locked-closed isolation valve inside and one automatic isolation valve outside containment; or

      (d) One automatic isolation valve inside and one automatic isolation valve outside containment.

      These provisions are in accordance with General Design Criteria 55 and 56.

      A simple check valve is considered an automatic isolation valve only on the inside of the containment on lines with flow coming into the containment.

   2. Lines that penetrate the containment and are neither part of the reactor coolant pressure boundary nor connected directly to the containment atmosphere have their penetrations designated as Type II. These lines are provided with valves as follows:

      (a) One automatic isolation valve outside containment; or

      (b) One locked-closed isolation valve outside containment; or

      (c) One isolation valve outside containment capable of remote manual operation.

The second isolation barrier on these lines is provided by the closed system inside containment, as defined in Subsection 6.2.4.1c.

These provisions are in accordance with General Design Criterion 57.

A simple check valve is considered an automatic isolation valve only on the inside of the containment on the lines with flow coming into the containment. Therefore, a stop-check valve is provided on the emergency feedwater line outside the containment.

3. Connections/lines only for test purpose are provided with manual isolation valves that are opened only for testing. These valves are always closed when not testing.

4. Instrument lines which are connected to the RCS are designed so that a break within these boundaries results in a relatively small flow that can be made up with the normal charging systems, which is in accordance with Regulatory Guide 1.11. The penetrations of these lines and lines connected to the containment atmosphere are designated as Type III, and are provided with isolation barriers in accordance with 10 CFR 50, Appendix A, General Design Criteria 55 and 56. See Subsection 6.2.4.2m(4) for exceptions to Regulatory Guide 1.141. The containment pressure, reactor coolant wide-range pressure, reactor vessel level and core differential pressure instrument lines are designed in accordance with the provisions of Regulatory Guides 1.141 and 1.151. For the containment pressure transmitters, isolation from the containment atmosphere is provided by a sealed bellows arrangement located immediately inside the containment wall, and is connected to the pressure transmitter outside containment by sealed, fluid-filled, tubing. Isolation outside containment is provided by the diaphragm in the pressure transmitter.

   The RCS wide-range pressure, level and core differential pressure transmitters have a sealed bellows connected to the RCS and a second sealed bellows-type isolator outside the containment to provide two barriers in addition to the diaphragm in the transmitters. All components are connected by sealed, fluid-filled, tubing.

e. Relief valves are used as isolation valves and their relief setpoint is greater than 1.5 times the containment design pressure, in accordance with Standard Review Plan 6.2.4.

f. The containment isolation systems are designed to remain functional following a safe shutdown earthquake.

g. Containment isolation valve closure speeds and leak tightness will prevent radiological effects from exceeding the guidelines established by 10 CFR 100.

h. Classification of essential and nonessential systems that penetrate containment is given in Table 6.2-83. Essential systems are defined as those piping systems penetrating containment which are necessary for mitigating the consequences of an accident; nonessential systems are classified as those piping systems penetrating containment which provide auxiliary service functions for operation of the plant, and which are not required for mitigation of accidents.

i. Although it is not specifically required to isolate containment in response to Station Blackout, the capability to establish containment integrity is provided (see Section 8.4.4.5).

6.2.4.2 System Design

a. General Description

Schematic representations of the isolation valving systems which define the fluid systems penetrating the containment wall, including instrument lines, are shown on Figure 6.2-91, sh.1, Figure 6.2-91, sh.2, Figure 6.2-91, sh.3, Figure 6.2-91, sh.4, Figure 6.2-91, sh.5, Figure 6.2-91, sh.6, Figure 6.2-91, sh.7, Figure 6.2-91, sh.8, Figure 6.2-91, sh.9, Figure 6.2-91, sh.10, Figure 6.2-91, sh.11. All valves and piping are fabricated of suitable stainless and/or carbon steel to conform to the ASME Boiler and Pressure Vessel Code, Section III, Code Class NC. Special attention is given to materials to ensure there are no radiolytic or pyrolytic decomposition products to interfere with the safe operation of any engineered safety features. Section 6.1 includes further discussion of the materials.

b. Component Description

A summary of the fluid system lines penetrating containment and the valves and closed systems employed for containment isolation is presented in Table 6.2-83. Each process valve is described as to type, open or closed status during normal operation, shutdown and accident conditions, and closure/opening time. Information is also presented on valve preferential failure mode, position indication, isolation signal and location relative to containment. The test, vent and drain (TVD) valves associated with penetrations are not specified in Table 6.2-83, but are shown on Figure 6.2-91, sh.1, Figure 6.2-91, sh.2, Figure 6.2-91, sh.3, Figure 6.2-91, sh.4, Figure 6.2-91, sh.5, Figure 6.2-91, sh.6, Figure 6.2-91, sh.7, Figure 6.2-91, sh.8, Figure 6.2-91, sh.9, Figure 6.2-91, sh.10, Figure 6.2-91, sh.11. All TVD valves located between the containment isolation valves are identified. For the remaining TVD valves (located outside the containment isolation valves), only the test valves are schematically shown as arrows to identify all containment isolation valves, demonstrate the ability to perform the Type C test (if required), and yet provide a clear, unobstructed schematic representation of containment penetrations. For further clarity, alphabetic suffixes were added to the individual lines of the multiple-line penetrations. These suffixes do not appear in other design documents.

c. Valve Actuation Signals

The design of the system providing the signals for containment isolation complies with the following general requirements:

1. The containment isolation signal overrides all signals for actuations of containment isolation valves for nonessential systems.
2. Phased isolation is used. With phased isolation, all systems except engineered safety features and non-engineered safety features-related systems are automatically isolated. Only those engineered safety feature-related systems that can be justified to remain operational shall not be automatically isolated during the initial phase.
3. Diverse parameters are used wherever possible for developing isolation signals.
4. Concurrent containment isolation occurs coincident with initiation of emergency core cooling.
5. All valves that receive a containment isolation signal cannot be reopened until the isolation signal is reset and manual action is taken to reopen the valve. The controls are separated so that only one valve, or group of valves associated with a penetration, open for each manual action.

Automatically tripped isolation valves are actuated to the closed position by one of two separate containment isolation signals. The first of these signals ("T" Signal) is derived in conjunction with automatic safety injection actuation on Hi-1 containment pressure, and trips the majority of the automatic isolation valves. The Hi-1 setpoint is the lowest practical and includes margin for containment pressurization, instrument error and operating margin. These are valves in the nonessential process lines which do not increase the potential for damage to in-containment equipment when isolated.

This is defined as "phase A" isolation, and the valves are designated by the letter "T" in the isolation diagrams of Figure 6.2-91. The second, or "phase B," containment isolation signal ("P" Signal) is derived from Hi-Hi containment pressure and/or actuation of the Containment Spray System, and trips the automatic isolation valves in the other process lines (which do not include safety injection lines) penetrating the containment. These isolation valves are designated by the letter "P" in the isolation diagrams.

Containment air purge (CAP) and containment online purge (COP) system lines which provide an open path from the containment environs are equipped with radiation monitors that are capable of isolating these lines upon receipt of a high radiation signal, in addition to automatic safety injection actuation, manual containment spray actuation and manual phase "A" isolation signals. Further discussion of containment isolation signals is found in Section 7.3. (Refer to Figure 7.2-8.)

d. Valve Closure Time

The objective in establishing valve closure time is to limit the release of radioactivity from the containment to as-low-as-is-reasonably-achievable. Consideration is given to the fluid system requirements (e.g., water hammer) in determining the valve closure time, the effect of closure time on valve reliability, as well as the containment isolation requirements.

These considerations have been addressed in the design of the containment isolation system, within the context and requirements of the guidelines and applicable criteria presented in Subsection 6.2.4.1, Design Bases.

Isolation valve closure times for the Containment Isolation System are presented in Table 6.2-83. The valves listed there reflect the maximum time required to isolate a system so that radioactive release to the environs during a design basis accident is within limits in 10 CFR 100. Refer to Subsection 9.4.5 for discussion of containment online purge line isolation.

e. Operability of Valves Inside Containment

Isolation valves located inside containment are subject to the high pressure, high temperature, steam-laden atmosphere resulting from an accident. Operability of these valves in the accident environment is ensured by proper design, construction and installation, as reflected by the following considerations:

1. All components in the valve installation, including valve bodies, trim and moving parts, actuators, instrument air control and power wiring are constructed of materials sufficiently temperature and humidity resistant to be unaffected by the accident environment. Special attention is given to electrical insulation, air operator diaphragms and stem packing material. Section 3.11 discusses the qualification of this equipment for operation in the containment atmosphere during an accident condition.

2. In addition to normal pressures, the valves are designed to withstand maximum pressure differentials in the reverse direction imposed by the accident conditions. Additionally, a review was performed to ensure that the containment isolation valves inside the containment were not overpressurized due to trapped fluid in adjacent piping in the post-LOCA environment.

3. The containment structure online purge subsystem is designed to prevent debris from entering the exhaust and supply lines to ensure the operability of the isolation valves. This is accomplished by debris screens installed in the ends of the lines. Each debris screen consists of heavy-bar stainless steel grating, banded and welded to the exhaust and supply ends of the lines. Both the exhaust and inlet piping have two 90° bends and a minimum of 14 feet. This design greatly reduces the possibility of direct impingement of debris on the valves. The pipe, screens and supports are seismic Category I. The screens will be capable of withstanding the differential pressure resulting from a LOCA up to the point of containment isolation.

Operability of valves and their operators within containment atmosphere is addressed by qualifying this equipment to IEEE Standard 382-1972, Guide for Type Test of Class I Electric Valve Operators for Nuclear Power Generating Stations, and NRC Regulatory Guide 1.73, Qualification Tests of Electric Valve Operators Installed Inside the Containment of Nuclear Power Plants. Updated FSAR Section 3.9 provides additional information on valve operability.

Containment isolation valve operators have been provided to ensure adequate reliability for the operation of the valves. Lines penetrating the containment that serve the engineered safety features as well as their associated support systems are provided with motor operators. To verify that motor operators have sufficient torque to operate the valves, the valves are tested by opening and closing under full system pressure. Operability during and after a LOCA is thus assured.

Isolation valves outside containment, which are not required to function during a post-LOCA condition, are provided with air operators and spring return to the fail-safe position.

All motor-operated valves have manual handwheel operators and can be closed or opened manually on loss of primary power.

f. Location of Valves Outside Containment

All isolation valves outside the containment are located as close to the containment as practical. All exterior isolation valves are located within 15 feet of containment, except for the main steam, feedwater and combustible gas control isolation valves. The main steam isolation valves are located within 75 feet of penetrations X-1 (westside) and X-2 (eastside), and 85 feet away from penetrations X-4 (westside) and X-3 (eastside). The feedwater isolation valves are located within 30 feet of the containment. The combustible gas control isolation valves are located within 50 feet of containment.

The distances of the main steam isolation valves from the containment mentioned above are required to accommodate the main steam safety valves and power-operated relief valves. The distance of the feedwater and combustible gas control isolation valves from the containment accommodates the required physical piping arrangement and provides accessibility to the valves for maintenance.

Two main steam and two feedwater lines emerge from the containment structure and enclosure on each side of the building, 180° from each other. On each side, the four lines turn and run parallel toward the Turbine-Generator Building. These lines and their isolation valves are enclosed in a seismic Category I structure and are shielded from tornado-generated missiles. The structure is designed with sufficient vent openings to the external atmosphere so that any possible pipe failure inside will not cause failure of the building by overpressurization.

g. Actuation and Control Equipment

Containment isolation valves are provided with actuation and control equipment appropriate to the valve type. For example, globe and diaphragm valves are generally fitted with air diaphragm operators which will fail in the safe position on loss of operating air. Gate valves are generally fitted with motor operators and are powered from emergency buses. On loss of offsite power, the power source is automatically switched to the diesel generators which feed the emergency buses. Motor-operated valves fail in the as-is position. No manual operation is required for immediate isolation.

If actuating power is lost, the automatic air-operated isolation valves assume the position (open or closed) that provides greater safety. Motor-operated isolation valves fail "as is." Manual control switches provide a secondary mode of actuation for the automatic isolation valves. The positions of the automatic isolation valves and remote manual valves are displayed in the main control room at both their control switch location and as part of the Post-Accident Monitoring System except for the main steam isolation valve (MSIV) bypass valves (MS-V-204, MS-V-205, MS-V-206, and MS-V-207). The circuit breakers for these valves are administratively controlled locked open (off) with the valves locked closed during power operation except for surveillance testing and to equalize pressure across the MSIVs before they are opened. With the circuit breakers open, the indicating lights at the control switch are off but the Post-Accident Monitoring System lights are still operable.

h. Seismic Design

Protection for containment isolation systems and components against loss of function due to seismic event forces is provided. Containment isolation valves and their operators are designated as seismic Category I. Containment isolation provisions are capable of maintaining the isolation function during and after the Safe Shutdown Earthquake (SSE). The valves are capable of being realigned after the Design Basis Event and to withstand seismic aftershocks following the SSE.

The containment isolation valves, their operators, and supports are designed to assure that they are capable of withstanding the Safe Shutdown Earthquake as recommended by Regulatory Guide 1.29.

To assure their adequacy in this respect:

1. Valves are located in a manner to reduce their accelerations. Valves suspended on piping spans are designed for the loads to which the span would be subjected. Valves are mounted in the position recommended by the manufacturer.

2. Valve yokes are designed for adequacy and strengthened as required for the response of the valve operator to seismic loads.

3. Where valves are required to operate during seismic loading, the operator forces are factored in the design to assure that system function is preserved.

4. Control wires and piping to the valve operators are designed to assure that the flexure of the line does not endanger the control system. Appendages to the valve, such as position indicators and operators, are designed for structural adequacy.

Additional information regarding the seismic design of systems and components is presented in Sections 3.7 and 3.9.

i. Missile Protection

All containment isolation valves, actuators, and controls are located so as to be protected against accident-generated missiles including those caused by a loss-of-coolant accident. The isolation valve gallery outside the containment is partitioned into four areas by a vertical wall and platform. In addition to providing missile protection, this arrangement provides for separation of redundant safety-related lines and serves as radiation shielding and a work platform during maintenance periods.

Inside the containment, missile protection is provided by a missile shield wall and accumulator tanks. No extraneous equipment is placed in the valve galleries. Only valves so protected are considered to qualify as containment isolation valves. Details regarding the probability of missile generation and design features to prevent the formation of missiles are given in Section 3.5.

j. Potential Leakages

All nonautomatic isolation valves which are left open to perform post-accident functions, except MS-V393 and MS-V394, have potential leak paths into the containment enclosure only. The design of the enclosure recirculation and filtration system is such that all possible leaks have been considered in determining the capacity of the system to maintain the potential radioactive discharge within the limits of 10 CFR 100 subsequent to a LOCA.

Provisions are made to detect and minimize the leakage from the engineered safety features and auxiliary systems located outside containment. Leakage monitors are installed to provide the plant staff with the current knowledge of the system leakage rates. Multiple monitors for noble gas effluents are installed with an extended range designed to function during accident as well as normal operating conditions.

The potential sources of bypass leakage past the containment enclosure are listed in Table 6.2-83. Details of leakage acceptance limits and testing are given in Subsection 6.2.6.

k. Physical Separation

Physical separation of containment isolation systems and components is provided where required in accordance with design guidance contained in "Physical Protection for Systems and Components Important to Safety, "ANS-58.3/N182 - 1977, "Standard Criteria for Separation of Class 1E Equipment and Circuits," Trial-Use, IEEE-384-1974, and in NRC Regulatory Guide 1.75, "Physical Independence of Electric Systems."

l. Fire Protection

Fire protection for containment isolation provisions against loss of function from fire is provided in accordance with "Generic Requirements for Light Water Nuclear Power Plant Fire Protection," ANSI/ANS-59.4-1979, "Standard for Fire Protection for Nuclear Power Plants, NFPA report 803-1978, and "Seabrook Station Fire Protection System Evaluation and Comparison to APCSB 9.5-1 Appendix A."

Additional information on fire protection is presented in Subsection 9.5.1.

m. Clarifications

All characteristics of the containment isolation system design conform to the criteria, regulatory guidelines, and other standards mentioned above, with the following clarification:

1. Only one isolation valve outside the reactor containment is provided on each of the two lines between the containment building recirculation sump and the suction of the residual heat removal and containment spray pumps. This reduces the probability of the valve failing to open when called upon to function. The pipe between the containment sump and the isolation valve is jacketed, and the isolation valve is enclosed in protective chambers so that failure of the pipe or the valve body will not result in release to the environment of radioactive fluid or gases.

2. Closed system (as defined in Subsection 6.2.4.1c) is used as a second isolation barrier for the containment penetrations of the following systems: residual heat removal, safety injection, chemical volume and control (SI portion only), containment building spray, main steam, feedwater, steam generator blowdown, and primary component cooling water (thermal barrier portion only).

(a) The containment penetrations for the main steam, feedwater, steam generator blowdown and primary component cooling water (thermal barrier portion only) are designated as Type II penetrations. The definition of the Type II penetrations is provided in Subsection 6.2.4.1d.2.

(b) The remaining penetrations which use a closed system as a second isolation barrier are designated as Type E. The following provides the details for the individual penetrations:

(1) The residual heat removal system utilizes two normally closed, pressure-interlocked valves in series for each suction line inside the containment. Further details on interlocks are discussed in Chapter 7. This arrangement decreases the probability of release to the environment of radioactive fluid or gases by eliminating a potential leakage point, and retains redundant isolation capability should a residual heat removal system pipe rupture occur outside the containment.

The valve which is located closer to the RCS is not considered a containment isolation valve. The second valve defines the containment isolation barrier inside containment and is considered to be sealed closed. This containment isolation arrangement is as described in ANS 56.2/ANSI N271-1976 and endorsed by Regulatory Guide 1.141.

(2) The arrangement of CBS/ECCS suction penetrations is described in Item 1 above.

(3) The discharge of all engineering safety features systems utilizes the check valves located inside containment as automatic isolation barriers.

3. Each supply line to the hydrogen analyzer portion of the combustible gas control system is provided with two closed manual isolation valves outside containment. The isolation valve inside containment is locked open to allow for post-LOCA operation of the analyzers. The first isolation valve outside containment is locked closed except when the hydrogen analyzers are in operation. An additional isolation barrier is provided by a closed system outside containment.

The locked closed containment isolation valves are not required to be Type C tested as per Table 6.2-83. These lines form a closed, seismic Category I system outside containment. The integrity of the closed system is maintained by performing periodic surveillance testing as described in Subsections 6.2.5.1.g and 6.2.6.

4. The sealed, fluid-filled, instrument systems which penetrate the containment boundary are designed to ANSI B31.1, Seismic Category I, not ASME Section III. The penetration is designed to ASME Section III, Code Class 2. See Subsection 7.1.2.12 for a discussion of compliance to Regulatory Guide 1.151. These sealed sensing lines, shown on Figure 6.2-91, sh.9, have no isolation valves, but because of the isolation barriers provided as part of the sealed, fluid-filled, system, a postulated severing of the line during either normal operation or accident conditions will not result in any radioactive release from the containment. This containment isolation arrangement is as described in ANS 56.2/ANSI N271-1976 and endorsed by Regulatory Guide 1.141. See Subsection 6.2.4.1d for additional discussion.

5. Not used.

6. Some of the pressure indicators and transmitters on the main steam line outside the containment (such as PT 3001 to 3004, 3173, 3174, 3178, 3179, and PI 3051 to 3054) are not qualified since they are not required for engineered safety systems, are on secondary (noncontaminated fluid) loops, and are on small lines whose breaks will not result in any significant steam leaks. This is consistent with the requirements of Regulatory Guide 1.11.

7. The CAP System penetrations each have a blind flange using a resilient double o-ring design installed on the penetration outside containment during Modes 1, 2, 3, and 4. The design includes a test groove between the o-rings for Type "B" testing in accordance with 10 CFR 50, Appendix J. The penetrations terminate in the containment enclosure during plant Modes 1, 2, 3, and 4, thereby allowing any leakage to be collected and processed by the Containment Enclosure Ventilation System.

6.2.4.3 Design Evaluation

The Containment Isolation System has been designed in accordance with Regulatory Guide 1.11, Design Criteria 54, 55, 56, 57.

Accordingly, it has been specifically designed to:

a. Isolate lines penetrating the containment, which are not required for the operation of the engineered safety feature systems, in the event of a LOCA;

b. Isolate lines penetrating the containment, which are not required for the operation of the engineered safety feature systems, in the event of a main steam line break;

c. Shut the isolation valves in the CAP and COP systems upon detection of high radioactivity.

Isolation of the containment in the event of a LOCA or a steam line rupture is initiated upon receipt of isolation signals as discussed in Subsection 6.2.4.2c and Section 7.3.

6.2.4.4 Tests and Inspections

During preoperational testing, tests are performed on the containment isolation system to verify valve response to containment isolation signals, and to determine valve leakage rates. Chapter 14 contains a further discussion of the preoperational tests performed on this system.

Periodic testing of the containment isolation system is performed in accordance with Technical Specification requirements. Subsection 3.9.6.2 describes the in-service inspection program for these valves.

6.2.5 Combustible Gas Control in Containment

Following a loss-of-coolant accident (LOCA) hydrogen gas may be generated inside the containment by reactions such as zirconium fuel cladding with reactor coolant, corrosion of metals of construction by solutions used for emergency core cooling or containment spray, and by radiolysis of aqueous solution in the core and sump. To ensure that the containment integrity is not compromised by burning or explosion of this hydrogen, a combustible gas control system (CGCS) has been provided to mix the containment atmosphere, monitor combustible gas concentrations within the containment regions, and reduce the combustible gas concentrations within the containment by recombination of the free hydrogen with the oxygen in the containment air.

6.2.5.1 Design Bases

a. The CGCS is capable of continuously monitoring the hydrogen concentration in the containment during and after a design basis LOCA. The CGCS is also capable of monitoring hydrogen concentration in containment during a beyond-design-basis accident for accident management, including emergency planning. The operator in the main control room is alerted of the need to activate systems to reduce combustible gas concentrations, when required, by an alarm from the operating hydrogen monitor.

b. The containment mixing portion of the CGCS is designed to uniformly mix the containment atmosphere for as long as is necessary during and following an accident which generates hydrogen. Mixing of the containment atmosphere prevents high concentrations of hydrogen from accumulating locally.

c. The CGCS, containment mixing subsystem, meets the redundancy and power source requirements for engineered safety features. It is designed to withstand a single active mechanical component failure and a passive electrical failure; no single failure will incapacitate the containment mixing system.

d. Components of the CGCS located within the containment are protected against damage from internally generated missiles or jet impingement in the post-LOCA environment. Moreover, such components have been subjected to qualification tests to demonstrate their capability to remain operable in the LOCA environment for as long as may be required.

e. The CGCS, including its foundations and supports, is designed to withstand the effects of an SSE without loss of function.

f. The CGCS design will permit periodic in-service inspection, operability testing and leak rate testing of the system or its components.

g. The unit is provided with its own permanently installed combustible gas control equipment.

h. In the absence of containment isolation "T" signal, the CGCS is capable of purging the containment in the event that more than a single failure of active elements of the system occurs.

i. The CGCS is classified as a seismic Category I system, and is designed, fabricated, erected and tested to Safety Class 2 quality standards, except for the containment structure recirculating filter system which is Safety Class 3. The hydrogen analyzers, which are normally isolated from the containment, are comprised of Class 1E, seismic Category I components.

j. The design of the combustible gas control system is in accordance with NRC Regulatory Guides 1.7, 1.22, 1.26 and 1.29, General Design Criteria 5, 41, 42, 43, and 50 and SECY 03-0127, "Final Rulemaking Risk-Informed 10 CFR 50.44, "Combustible Gas Control in Containment."

6.2.5.2 System Design

The CGCS consists of subsystems which monitor the combustible gas concentrations in the containment, and which possess the capability for maintaining a mixed containment atmosphere to ensure that hydrogen concentrations remain below flammable levels following a loss-of-coolant accident. The overall system is depicted on Figure 6.2-92. A portion of the CGCS, the fans installed to mix the containment atmosphere, are not shown on this figure, but are discussed in Subsection 6.2.5.2b.

a. Hydrogen Monitoring Subsystem

The containment atmosphere is monitored by two completely independent hydrogen sampling and analysis systems which are started after an accident. The hydrogen analyzer design parameters are summarized in Table 6.2-84.

The suction intakes are located at elevation 183'-6", at opposite sides of the containment dome, terminating in 90° elbows pointing downward to minimize entry of spray into the sample lines. To prevent condensation of moisture in the suction lines to the analyzers, the lines are heat-traced and maintained at a temperature of 278° or greater, after penetrating the containment wall. This ensures that the gas sample is maintained above the steam saturation temperatures postulated to occur during design basis accidents (ref. Figure 3.11-1).

The analyzers are located outside containment at the 22'-0" level of the Main Steam and Feedwater Pipe Chase Building, and take suction through a heavy-walled tube of approximately ¼" bore, with lengths varying from 150 feet to 300 feet inside the containment.

To maintain the requirement for separation of the two redundant monitoring subsystems, each analyzer is powered from a different electrical train, and has its own distinct discharge piping to return the sampled gas to the containment.

The hydrogen analyzers are normally isolated from the containment-related piping by Safety Class 2 manual valves at the analyzers.

Since the analyzers are located outside the containment, periodic inspection and testing are facilitated. The less strenuous conditions expected in the Main Steam and Feedwater Pipe Chase Building, rather than the post-accident environment inside the containment, are all the analyzers need be qualified for.

The analyzers work on the principle of thermal conductivity of hydrogen at various concentrations. Grab sampling provision is available in the vicinity of the hydrogen analyzers on a per train basis.

b. Containment Atmosphere Mixing

Mixing of the containment atmosphere to prevent localized buildup of hydrogen concentrations is provided by the Containment Spray System, described in Subsection 6.2.2. This aspect of mixing is discussed further in Subsection 6.2.5.3.

Subcompartments not exposed to the sprays have been designed so that no pocketing of hydrogen in their upper levels is possible. The top of the entrance to these subcompartments is always flush with their ceiling, and the elevation of the ceiling immediately outside of them is never lower than the entrance way. Compartments located beneath the operating floor connect with the free containment volume by their doorways and via piping penetrations through which they also communicate with each other. Hydrogen vent ports have also been included in the ceiling of such subcompartments at the end opposite from their entrances to prevent any dead-ending which could inhibit natural dispersion by convection and diffusion.

The associated Containment Structure Recirculation Filter System (CSRFS) is described in Subsection 9.4.5. Following a LOCA, the two 4000 scfm fans are started by an engineered safety feature actuation signal, as discussed in Chapter 7. The fans take suction from the apex of the dome and discharge below the operating floor. The fans, the dampers, and the suction and discharge ductwork are capable of withstanding the physical, chemical and radiological environment to which they will be subjected in the event of a LOCA. These elements of the CSRFS are redundant, separate, and built to Safety Class 2 and seismic Category I standards.

c. Hydrogen Recombiners

One means of combustible gas control in the containment is through the use of electric hydrogen recombiners. The codes, standards and regulatory guides employed in their design are listed in Table 6.2-85. The unit has a pair of recombiners, located at the perimeter of the operating floor inside the containment. Thus, there is no need to protect personnel from radiation in the vicinity of an operating recombiner. The separateness extends beyond the physical distinction to the independence of instrumentation, control circuits and power supply so that no single failure can impede the operation of more than one recombiner. Table 6.2-86 summarizes the recombiner design parameters.

The recombiner, Figure 6.2-94, consists of an inlet preheater section, a heater-recombiner section, and a discharge mixing chamber. The inlet preheater section is a thermally insulated vertical metal duct positioned around a central heater section to take advantage of heat losses from the heater section. The heater section consists of four vertically stacked assemblies of electric heaters, each assembly containing individual heating elements. An outer enclosure provides protection against containment spray water. The overall assembly is mounted on structural steel framing which provides a substantial foundation free of normal operating vibration.

The recombiner is fabricated of a corrosion-resistant high temperature material, except for the base which is of carbon steel. The heaters are commercial-type electric resistant heaters sheathed with Incoloy-800, an excellent corrosion-resistant material for this purpose. These heaters are operated at significantly lower power densities than in commercial service.

Air is first drawn into the preheater section by natural convection, where it is warmed. It then passes through an orifice, plate, and enters the electric heater section where it is heated to approximately 1150 to 1400°F, thus causing recombination between the oxygen and hydrogen. The efficiency of recombination is 99.9 percent, minimum, at all hydrogen concentrations between 2 and 4 percent.

Tests have verified that the recombination is not a catalytic surface effect associated with the heaters, but occurs as a result of the increased temperature of the process gases. Since the phenomenon is not a catalytic effect, saturation of the unit does not occur. Operation of the recombiner is manually controlled from a panel located in the main control room (the recombiner, power supply panel and control panel are shown schematically in Figure 6.2-95). The recombiner power panel contains an isolation transformer plus an SCR controller to regulate power into the recombiner. This equipment is mounted outside the containment and thus, is not exposed to the post-LOCA environment. To control the recombination process, the correct power input for bringing the recombiner above the threshold temperature for recombination is set on the controller. The correct power required for recombination depends upon containment atmosphere conditions, and is determined when recombiner operation is required. For equipment tests and periodic checkouts, a thermocouple readout instrument is also provided in the control panel for monitoring temperatures in the recombiner. Reference 22 further describes these recombiners and their qualification testing.

d. Backup Purge System

The capability for purging of the containment at a controlled rate is also provided. Purging is accomplished by replacing the purged gas with clean compressed air.

The purge system, Figure 6.2-92, consists of a flow meter, a throttle valve and associated piping. After the flow meter, the piping terminates adjacent to the inlet screens of the emergency cleanup filters located within the containment enclosure. From the filters, there is a direct path to the unit plant vent. The purge line separates close to the emergency filters, and each of the two lines ends in a pipe reducer bell close to the inlet screen of one of the filter units. Each of these two lines includes an isolation valve, so that the purge gas flow can be directed to whichever filter unit is operating. The purge system is aligned and the purge flow is initiated manually. The Containment Enclosure Emergency Cleanup System is discussed in Subsection 6.2.3; the filter system's design requirements are detailed in Subsection 6.5.1.

Components and ductwork associated with the filters are classified as Safety Class 3 and seismic Category I. All piping inside the containment and the containment penetration connections associated with the purge system are duplicated to provide independent and redundant capability and to prevent a single failure from stopping the containment purge/flow vent. These are Safety Class 2. External to the containment, a single line runs from the penetration area to the containment enclosure emergency filters.

6.2.5.3 Design Evaluation

A beyond design bases accident could generate hydrogen. Turbulence created by the rupture of a coolant line serves to thoroughly mix the atmosphere of the containment in the early phases of the post-LOCA period. The release to the containment of the hydrogen produced by radiolysis of cooling water in the core would be through the break, and would be associated with the local mixing caused by the break flow. The hydrogen generated by corrosion of metals by spray water would, in turn, be mixed with the free containment volume by that spray. In addition, the aluminum and zinc in the containment are widely distributed. The inventories of these corrodible metals are shown in Table 6.2-87 and Table 6.2-88, respectively.

In the long term, after the temperature in the containment has been reduced by the containment heat removal system, and the rate of hydrogen production by corrosion is diminished, the principal source of combustible gas buildup is the radiolysis of the water injected into the reactor vessel and sprayed into the containment. Hydrogen originating from core radiolysis is deemed to be distributed in the region of the break by the dispersion caused by the mass flow from it. The radiolysis of sump water by fission products released from the core produces hydrogen at a lower rate than radiolysis in the core a day or two after the accident. Hydrogen generated by sump water radiolysis is distributed by two means, the second of which serves to insure that combustible gas concentrations, in general, are homogeneous within the containment, including recombiner or sampling locations:

a. The minimum post-LOCA spray rate is 3000 gpm. With a maximum possible sump water volume of 475,000 gallons the entire amount of sump water is sprayed through the containment atmosphere approximately every three hours. The fission products are uniformly distributed in the sump water, being mixed by turbulence caused by injection, break flow and spraying, but the means of release to the containment atmosphere must be across the water-gas interface. Hydrogen atoms, not bubbles, are formed by radiolysis. They diffuse through the sump water forming molecules, which themselves diffuse and escape to the atmosphere at the surface once the relatively low solubility of hydrogen in water is passed, saturating the sump water. Ultimately, the release rate of hydrogen to the containment free space equals the production rate from radiolysis of sump water. Using the data concerning spray droplets, fall height, etc., detailed in Subsection 6.5.2, it is calculated that the surface-to-mass ratio for the water in the sprays exceeds that of the water in the sump by a factor of more than 5000. Thus, virtually all of the hydrogen generated by radiolysis caused by fission products outside the core is released by the water while it is being sprayed. The spray pattern is designed so that, even if only one train of sprays is available, the volume of the containment above the operating floor is uniformly exposed to the sprays.

b. To insure that the atmosphere of the containment is mixed, so that hydrogen concentrations are virtually identical, the fans in the containment structure recirculation filter system discussed above recirculate the gases in the containment more rapidly than twice a day, even with only one fan available. The discharge of the fan flow below the operating floor promotes a flow from those regions upward to the suction of the fans at the apex of the dome, with the containment atmosphere passing through the sprayed region. Thus, no stratification of hydrogen is possible. The system meets the requirements of Regulatory Guide 1.7.

The pertinent data for evaluation of the control aspect of the combustible gas control system is summarized in Table 6.2-89. Although Subsection 15.6.5.3c.1 indicates that only < 1.0 percent of the zirconium would react, for conservatism, 5 percent is assumed to participate in a reaction with the coolant to produce hydrogen coincident with the accident. To prevent the concentration of hydrogen from reaching 4 volume percent in the containment, the recombiners would be turned on at any time before, or when, the concentration reached 3.5 volume percent. If only one recombiner is turned on 278 hours after a LOCA when the 3.5 volume percent setpoint is reached, the hydrogen concentration will begin to drop immediately. The combustible gas concentration in the containment as a function of time is shown on Figure 6.2-96, both with and without the operation of a single recombiner, at an efficiency of 99.9 percent. The backup purge system, as described in Subsection 6.2.5.2d, could be operated at rates up to 1000 scfm. This far exceeds that of a single recombiner which processes only 100 scfm. Although actuation of the recombiners could be delayed, the 3.5 volume percent is selected to have margin for detection of the failure of both recombiners to function. In this event, the backup purge system would be started at the 3.8 volume percent level. This would leave approximately 41 hours to start purging. Figure 6.2-97 shows the containment hydrogen concentration with neither recombiner nor purge, and with purging at a rate of only 3 percent of the containment volume per day starting at the 3.8 volume percent mark, 319 hours after the LOCA. The actual purge rate used will be based on an analysis of the containment atmosphere following a LOCA. Projected offsite doses resulting from containment purging, if required, are described in Subsection 15.6.5.4.

6.2.5.4 Testing and Inspection

a. Hydrogen Analyzer

The hydrogen analyzer is shop-tested using a gas mixture closely simulating the containment post-LOCA atmosphere expected at the time the units would be placed into service, with the temperature, pressure, humidity and hydrogen concentration conditions approximated.

During preoperational testing, the hydrogen analyzers are calibrated and checked for proper operation. System integrity will be maintained by performing periodic surveillance testing as described in Subsection 6.2.6. Periodic calibration tests will be performed in accordance with Technical Requirements.

b. Hydrogen Recombiner

The electric hydrogen recombiners have undergone extensive testing in the Westinghouse development program. These tests encompassed the initial analytical studies, laboratory proof-of-principal tests, and full-scale prototype testing. The full-scale prototype tests included the effects of:

1. Varying hydrogen concentrations
2. Alkaline spray atmosphere
3. Steam
4. Convection currents
5. Seismic activity

A detailed discussion of these tests is given in Reference 22.

During preoperational testing, the functional operability of the recombiner and its control will be demonstrated. Periodic testing of the recombiners will be performed in accordance with plant procedures.

c. Backup Purge System

The containment purge function of the CGCS will be demonstrated during preoperational testing. Initial and periodic tests of the containment enclosure emergency exhaust filters is described in Subsection 6.5.1.

d. Containment Structure Recirculation Filter System

The operability of containment atmospheric mixing fans and dampers will be verified during preoperational testing. Periodic tests of the fans and dampers will be conducted in accordance with Technical Specification requirements.

6.2.5.5 Instrumentation Requirements

With the occurrence of a LOCA, the ESF actuation signal will start the Containment Recirculation Fan System. Two independent hydrogen analyzers which monitor containment hydrogen concentrations after an accident, are located outside the containment. Off-normal conditions, such as low temperature, low sample flow and pressure, and cell failure are alarmed at the control room on a system level as a common alarm, and individually indicated at the local panel. The output of either channel of the hydrogen analyzers is available to the operator, both locally and at the MCB. When either channel indicates a hydrogen concentration at or prior to 0.5 volume percent below the limiting hydrogen concentration, this fact is alarmed at the main control board (MCB). The operator would then start the recombiners, if he had not done so already.

The recombiners are thermal electric types. Temperature sensors located at the recombiner input to the MCB temperature indication to maintain the recombiner temperature at an optimum value for efficient recombination of H2 and O2 into water. The power input to the recombiner is manually set from the MCB. Recombiner temperature and power input are indicated at the MCB. The temperature indication is used for equipment tests and periodic checkouts and is not required for the safety-related function of the hydrogen recombiners.

In the event that neither recombiner starts, the hydrogen concentration in the containment would continue to rise. If it has risen significantly above the first alarm point but is still below the limiting hydrogen concentration, this fact would be alarmed at the MCB as a signal to the operator to initiate the purging of the containment.

The Containment Purge System is normally closed, and is isolated from the containment by four valves: CGC-V14 and CGC-V28 inside the containment are remotely controlled, motor-operated valves that close on a "T" signal; valves CGC-V15 and CGC-V36 located outside the containment are manually operated and normally locked closed. Initiating purge flow is a manually controlled operation, with a combination of both local and remote control from the MCB. Valve status for the remotely operated valves CGC-V14 and CGC-V28 is provided near the associated control switches. Pressure and flow instruments are provided in the purge line. Purge flow indication is available at the MCB. Air for the purge system is supplied from the Compressed Air System.

6.2.6 Containment Leak Rate Testing

The reactor containment structure, the containment penetrations and the containment isolation barriers are designed to permit periodic Type A integrated leakage rate testing. The reactor containment and its leakage limiting barriers are also designed to permit periodic inspection of important areas such as penetrations. Penetrations with resilient seals or expansion bellows are designed to permit periodic leakage testing at pressures up to the containment design pressure. Piping systems penetrating the reactor containment are provided with the capability of redundant isolation, as dictated by their importance to safety functions. These systems are designed so that their isolation capabilities can be periodically tested for operability and leakage to ensure compliance with the established leakage rate limits. The foregoing are intended to be in full compliance with General Design Criteria 52, 53 and 54 of 10 CFR 50, Appendix A.

All portions of the above systems (RHR, CBS, SI and CS) are located within the containment enclosure boundary except piping associated with the injection phase of ECCS and a minor amount of charging pump piping used during the recirculation mode. Any leakage from these systems following a LOCA is therefore filtered by the containment enclosure emergency exhaust filters prior to release to the environment.

The piping that lies outside the containment enclosure boundaries includes the pump suction lines from the refueling water storage tank to the RHR, SI and CBS pumps (lines 1201-1-151-14" and 1202-1-151-14", see Figure 6.2-74) and the centrifugal charging pumps (lines 1205-1-151-8" and 1206-1-151-8", including valves LCV-112D and LCV-112E). These lines are used only during the injection phase of post-accident operation. They are isolated within the containment enclosure, will not be contaminated during recirculation, and will not present a release path. A portion of line CS-374-1-2501-4" is run outside the containment enclosure. This line is used during the recirculation phase of post-accident operation; however, there are no valves or equipment in this pipe segment. The leakage potential for this line is therefore small.

The RHR pumps are periodically tested via a recirculation path. This will function as a leak test because operating in the recirculation mode exposes the discharge pipe and pump to a pressure higher than that experienced during a LOCA. The RHR pumps are tested at least once every 18 months according to the Technical Specifications.

CBS equipment is periodically tested via a recirculation path. This will function as a leak test, as pressure during the recirculation mode exposes the discharge pipe and pump to a pressure higher than that experienced in a LOCA. The containment spray pumps are tested at least once every 18 months per Technical Specification 4.6.2.1.

The safety injection pumps are tested via a recirculation miniflow test line to the refueling water storage tank. The pressure in the pump and pump discharge line is greater than that seen in a LOCA. This test is performed at least every 18 months per Technical Specification 4.5.2.

Portions of the RHR, CBS, and SI systems are periodically inspected for leakage under the Leakage Reduction Program in accordance with Technical Specifications 6.7.6.a.

The leakage from ECCS and containment spray system equipment has been evaluated in Subsection 15.6.5.4d and the impact of this leakage is factored into the offsite dose calculations.

The Containment Leakage Rate Testing (CLRT) Program is described in the Leakage Test Reference (SLTR). Periodic Type A, B, and C leakage tests will be performed and reported in compliance with the intent of 10 CFR 50, Appendix J. Deviations from the wording of Appendix J are included in the Technical Specifications.

The testing program included a complete series of Type B and Type C tests as presented in Subsections 6.2.6.2 and 6.2.6.3, prior to fuel loading. During plant operation, each penetration requiring testing will be tested periodically to ensure continued compliance with leakage limits.

6.2.6.1 Containment Integrated Leakage Rate Test - Type A Test

The initial containment integrated leakage rate test (Type A test) was performed after completion of construction of the containment structure and prior to initial fuel loading. Periodic integrated leakage rate tests shall be conducted in accordance with Subsection 6.2.6.4 and Technical Specifications 4.6.1.2.

The maximum allowable integrated leakage rate, La, at the calculated peak accident pressure, Pa, is 0.15 weight percent per 24 hours. The calculated peak accident pressure, Pa, is 49.6 psig.

Prior to conducting the initial Type A test all penetrations were installed and all systems penetrating the containment were complete, up to and including all automatic isolation valves external to the containment. Deviations from this schedule were documented and properly considered when reporting final leakage rate test results.

The structural integrity test (SIT) preceded the initial Type A test. A minimum of 24 hours elapsed from the time the containment was in excess of 85 percent Pa for the SIT and the commencement of the Type A test, to assure sufficient time for outgassing from the internal structure.

The structural integrity of the containment vessel and of the containment enclosure building shall be determined in accordance with the Containment Leakage Rate Testing Program. Any abnormal degradation detected during these inspections will be reported as part of a special report as required by Technical Specifications.

Systems will be aligned for the Type A test based on the requirements of the Containment Leakage Rate Testing Program. Table 6.2-90 lists systems typically vented prior to and during the conduct of the Type A test. Table 6.2-91 lists those systems typically not vented and drained, and the justification thereof.

The required tests including applicable pre-test requirements, data analysis methods, test acceptance criteria, test schedule requirements, and reporting requirements are discussed in the Containment Leakage Rate Testing Program.

6.2.6.2 Containment Penetration Leakage Rate Test - Type B Test

Type B tests are required on all containment penetrations with resilient seals, gaskets, or expansion bellows. These include, but are not limited to, air locks, air lock door seals, piping penetrations with expansion bellows and blind flanges, and electrical seals. Those penetrations which are seal-welded are exempt from this testing requirement. Table 6.2-92 lists all containment penetrations falling into this category.

All penetrations requiring Type B testing will be tested in accordance with the Containment Leakage Rate Testing Program. This is in accordance with Appendix J of 10 CFR 50.

6.2.6.3 Containment Isolation Valve Leakage Rate Test - Type C Test

Type C tests are required on all lines that penetrate the primary containment and present a potential leakage path between the inside and outside atmospheres of the primary containment under postulated accident conditions. These include lines: (1) that provide a direct connection between containment atmosphere and the outside, like purge and vent lines; (2) whose isolation valves are required to close automatically upon receipt of a containment isolation signal to isolate containment atmosphere or the Reactor Coolant System; or, (3) whose isolation valves are required to operate intermittently under post-accident conditions to isolate containment atmosphere or the Reactor Coolant System. Table 6.2-83 lists all lines penetrating the containment and, where applicable, the containment isolation valves associated with those lines. Those lines not considered as requiring testing are noted. Containment isolation valves which are not Type C tested, and the reasons thereof, can be categorized as follows:

a. Valves that isolate lines which form a closed system inside containment satisfying the criteria of Updated FSAR Subsection 6.2.4.1c are not Type C tested. These systems, and therefore their respective containment isolation valves, will not communicate with containment atmosphere or the reactor coolant system under post-accident conditions. These systems include main steam, feedwater, and steam generator blowdown, and component cooling water supply and return for the thermal barrier heat exchangers.

b. Certain ECCS containment isolation valves are not Type C tested. The primary function of many of these valves is not to isolate containment following an accident, but rather to direct emergency core cooling water as desired. In fact, most of the valves will be open during one or more of the three ECCS post-accident modes. In addition, the valves are part of Safety Class 2/seismic Category I systems that are closed outside containment and liquid-filled, with an assured post-accident 30-day water supply. A water seal at a pressure greater than 1.10 Pa will be maintained at the containment penetrations associated with these isolation valves for the 30-day post-accident period. This seal precludes leakage of containment atmosphere.

c. The containment isolation valves on the CGC hydrogen analyzer lines are not required to be Type C tested. These lines form a closed, seismic Category I system outside containment. The integrity or the closed system will be maintained by performing periodic surveillance testing as described in Subsections 6.2.4.2.m.3 and 6.2.5.1.g.

Type C tests will be performed in accordance with the Containment Leakage Rate Testing Program. For valves tested in this manner, a radiological assessment will be made to establish the leakage limits. This form of testing meets the intent of 10 CFR 50, Appendix J (III.C.2), and no exemption is noted.

As discussed in 6.2.3.2.d, a containment enclosure emergency cleanup system has been provided to minimize leakage to the environs. A significant number of lines penetrate the containment and terminate in areas not treated by this cleanup system. All leakage attributed to penetrations and isolation valves, requiring Type B and Type C leakage rate tests per 10 CFR 50, Appendix J, is conservatively assumed to bypass the cleanup system.

6.2.6.4 Scheduling and Reporting of Periodic Tests

The Type A test schedule and reporting requirements will be in accordance with the Containment Leakage Rate Testing Program.

6.2.6.5 Special Testing Requirements

This section addresses the special requirements associated with the secondary containment surrounding the primary containment. The maximum allowable leakage rate and in-leakage limits are discussed in Subsection 6.2.3.3(a) and Technical Specification 3/4.6.5.2.

6.2.7 References

1. "CONTRAST-S MOD1 - A Digital Computer Program to Predict Containment Pressure-Temperature Response," UEC-TR-006-SUP, June 1979, A Supplement to UE&C Topical Report UEC-TR-006-0, March 1976.
2. Roshenow, W.M. and Hartnett, J.P., "Handbook of Heat Transfer," McGraw-Hill, New York (1973)
3. Brazlay, M.E., "Range of Interface Thermal Conductance for Aircraft Joints," NASA TND-426, May 1960.
4. Tagami, T., et al., "Studies for Safety Analysis of Loss-of-Coolant Accidents in Light Water Power Reactors," NSJ-TR-223, March 1968, Japan Atomic Energy Research Institute, Japan.
5. Uchida, H., et al., "Evaluation of Post-Accident Cooling Systems of Light Water Power Reactors," Third International Conference on the Peaceful Uses of Atomic Energy, New York, 1965.
6. "Preliminary Safety Analysis Report," Public Service of New Hampshire, Seabrook Station Units 1 & 2, Docket-Nos. 50-443 and 50-444.
7. Clausing, A.M., "Practical Techniques for Estimating the Accuracy of Finite-Difference Solutions to Parabolic Equations," J. Appl. Mech., March 1973.
8. Shepard, R. M., et al., "Westinghouse Mass and Energy Release Data for Containment Design," WCAP-8312-A, Rev. 2 and WCAP-8264-P-A (Proprietary) February 1974.

9. Niyogi, K.K., Bhatnager S.K. and Rathi, S.S., "COMPRESS - A Code for Calculating Subcompartment Pressure Response," UEC-TR-004-1, July 1976.

10. Idel' Chik, I.E., "Handbook of Hydraulic Resistance, Coefficients of Local Resistance and of Friction," Israel Program for Scientific Translations, Jerusalem, 1966.

11. NS-TMA-2075 letter from T. M. Anderson, Westinghouse to J. F. Stolz, NRC, April 25, 1979, Westinghouse LOCA Mass and Energy Release Model for Containment Design - March 1979 Version.

12. Westinghouse ECCS Evaluation Model, February 1978 Version, WCAP-9220, February 1978.

13. F. M. Bordelon, et al., "SATAN-VI Program: Comprehensive Space-Time Dependent Analysis of Loss-of-Coolant," WCAP-6174, June 1974.

14. G. Collier, et al., "Calculational Model for Core Reflooding After a Loss-of-Coolant Accident (WREFLOOD Code)," WCAP-8170 (Proprietary) and WCAP-8171 (Nonproprietary), June 1974.

15. Land, R.E., "Mass and Energy Releases Following a Steam Line Rupture," WCAP-8822, September 1976.

16. Deleted.

17. Kirk-Othmer, Encyclopedia of Chemical Technology, 2nd Edition Volume 3, Page 6.9, Figure 4.

18. Transactions of the Electrochemical Society, 1935, Volume 47, Page 88-100.

19. Ranz, W.E. and Marshall, W. R. Jr., Chemical Engineering Progress, 48, 4p. 173 (1952).

20. Parsly, L. F., Design Considerations of Reactor Containment Spray Systems - Part VI, ORNL-TM-2412.

21. Flow of Fluids through Valves, Fittings, and Pipe; Crane Technical Paper No. 410, 13th Printing - 1973.

22. J. F. Wilson, "Electric Hydrogen Recombiner for PWR Containments," Westinghouse WCAP-7709-L (Proprietary) and WCAP-7820 (Non-Proprietary), Supplements 1, 2, 3, 4 and 5.

23. Niyogi, K. K. and Lin, S. D., "An Analysis of Two Stream Gravity Feed Mixing Process," ASME 77-DE-44, February 14, 1977.

24. Deleted.

25. Deleted.

26. Deleted.

27. SECY 03-0127, "Final Rulemaking Risk-Informed 10 CFR 50.44, "Combustible Gas Control in Containment," dated July 24, 2003.

28. Calculation No. 4.3.16-13F, Revision 3, "Free Hydrogen in Containment."

29. NAI 8907-2, Revision 13, "GOTHIC Thermal Hydraulic Analysis Package User Manual," Version 8.0, July 2012.

30. Topical Report DOM-NAF-3-NP-A, GOTHIC Methodology for Analyzing the Response to Postulated Pipe Ruptures Inside Containment, September 2006.

6.3 EMERGENCY CORE COOLING SYSTEM

6.3.1 Design Bases

The Emergency Core Cooling System (ECCS) consists of the centrifugal charging pumps, safety injection pumps, a refueling water storage tank, the residual heat removal pumps, the residual heat removal heat exchanger, the safety injection accumulators, and the associated valves and piping.

Plants listed in Subsection 1.3.1 have similar Emergency Core Cooling Systems to that of Seabrook.

The primary function of the ECCS following an accident is to remove the stored and fission product decay heat from the reactor core so that fuel rod damage, to the extent that it would impair effective cooling of the core, is prevented.

The ECCS is designed to cool the reactor core as well as to provide additional shutdown capability following initiation of the following accident conditions:

a. Loss-of-Coolant Accident (LOCA) including a pipe break or a spurious relief or safety valve opening in the Reactor Coolant System (RCS) which would result in a discharge larger than that which could be made up by normal makeup system.

b. Rupture of a control rod drive mechanism causing a Rod Cluster Control Assembly (RCCA) ejection accident.

c. Steam or feedwater system break accident including a pipe break or a spurious relief or safety valve opening in the secondary steam system which would result in an uncontrolled steam release or a loss of feedwater.

d. A steam generator tube rupture.

The acceptance criteria for the consequences of each of these accidents are described in Chapter 15 in the respective accident analysis sections.

The bases used in design and for selection of ECCS functional requirements are derived from Appendix K Limits for fuel cladding temperature, etc., following any of the above accidents as delineated in 10 CFR 50.46. The subsystem functional parameters are selected so that, when integrated, the Appendix K requirements are met over the range of anticipated accidents and single failure assumptions.

NOTE: All drawings referenced that are not included were provided separately to the NRC as required in Updated FSAR Section 1.7.

The reliability of the ECCS has been considered in selection of the functional requirements, selection of the particular components and location of components and connected piping. Redundant components are provided where the loss of one component would impair reliability. Valves are provided in series where isolation is desired, and in parallel when flow paths are to be established for ECCS performance. Redundant sources of the safety injection actuation signal are available so that the proper and timely operation of the ECCS will be ensured. Sufficient instrumentation is available so that a failure of an instrument will not impair readiness of the system. The active components of the ECCS are powered from separate buses which are energized from offsite power supplies. In addition, redundant sources of auxiliary onsite power are available through the use of the emergency diesel generators to ensure adequate power for all ECCS requirements. Each generator is capable of driving all pumps, valves, and necessary instruments associated with one train of the ECCS.

All valves required to be actuated during ECCS operation are located to prevent vulnerability to flooding. Repositioning of valves due to spurious actuation coincident with a LOCA has been analyzed and is not considered credible for a design basis.

The environmental qualification of active ECCS equipment is discussed in Section 3.11.

Protection of the ECCS from missiles is discussed in Section 3.5. Protection of the ECCS against dynamic effects associated with ruptures of piping is described in Section 3.6. Protection from flooding is also discussed in Section 3.4.

The elevated temperature of the sump solution during recirculation is well within the design temperature of all ECCS components. In addition, consideration has been given to the potential for corrosion of various types of metals exposed to the fluid condition prevalent immediately after the accident or during long-term recirculation operations.

6.3.2 System Design

6.3.2.1 Schematic Piping and Instrumentation Diagrams

Flow diagrams of the ECCS are shown in Figure 6.3-1, Figure 6.3-2, Figure 6.3-3, Figure 6.3-4, Figure 6.3-5 and Figure 6.3-6.

a. System Operation

Upon the initiation of a safety injection "S" signal, the following automatic actions are initiated to commence the injection phase of emergency core cooling:

1. Centrifugal charging pumps start (see Dwg. NHY-503335).
2. Refueling water storage tank suction valves to charging pumps open (see Dwg. NHY-503335).
3. Normal charging path valves close (see Dwg. NHY-503337).

4. Charging pump miniflow valves close (see Dwg. NHY-503380 & NHY 503398).
5. Safety injection pumps start (see Dwg. NHY-503900).
6. Residual heat removal pumps start (see Dwg. NHY-503761).
7. Any closed accumulator isolation valves open. These valves will open only if power is available to the normally de-energized motor control centers E 522 and E 622 (see Dwg. NHY-503907).
8. Volume control tank outlet isolation valves close. Valves are interlocked with the RWST suction valves to the charging pumps (see Dwg. NHY-503341).
9. High head safety injection valves open (see Dwg. 1-NHY-503903).

During the injection phase, the two centrifugal charging pumps (CCPs) operate to inject into the cold legs of all four loops. The source water to the CCPs is the refueling water storage tank (RWST).

Once the Reactor Coolant System (RCS) pressure is below shutoff head of the two safety injection pumps (SIPs), they begin to take borated water from the RWST and deliver it to the cold legs of the four loops. This is done through the residual heat removal (RHR) injection/accumulator discharge lines. In the case of a steam line break or small RCS break, the system pressure remains high for a long period of time, and the CCPs and SIPs supply core cooling.

When the RCS pressure drops below the pressure of the four safety injection accumulator tanks, they discharge their contents in the four RCS cold legs. These accumulators contain borated water and are pressurized with nitrogen. This portion of the ECCS is most effective in the case of large RCS breaks where system pressure drops rapidly to the accumulator pressure.

The two residual heat removal pumps (RHRPs) take water from the RWST and inject it into the cold legs of all four RCS loops via the accumulator discharge lines once system pressure drops below the shutoff head of the pumps.

Therefore, upon the initiation of the safety injection "S" signal, borated water is injected into the RCS via the CCPs, SIPs, accumulator tanks and RHRPs. The point at which these various injection modes commence operating is controlled by the rate at which the reactor coolant is lost and system pressure drops.

The RWST supplies the borated water used for the injection phase of the ECCS. When the RWST water level drops to the low-low-1 level alarm point, the injection phase is discontinued and the cold leg recirculation phase is initiated.

The changeover from the injection mode to recirculation mode is initiated automatically and completed manually by operator action from the main control room. Protection logic is provided to automatically open the two containment recirculating sump isolation valves when two out of four refueling water storage tank level channels indicate a refueling water storage tank level less than a low-low-1 level setpoint in conjunction with the initiation of the engineered safeguards actuation signal ("S" signal). This automatic action would align the two residual heat removal pumps to take suction from the containment sump and to deliver directly to the RCS. It should be noted that the residual heat removal pumps would continue to operate during this changeover from injection mode to recirculation mode.

The two charging pumps and the two safety injection pumps would continue to take suction from the refueling water storage tank following the above automatic action, until manual operator action is taken to align these pumps in series with the residual heat removal pumps.

Valves SI-V138 and SI-V139, in the injection path, are normally closed (but not de-energized). A safety injection ("S") signal then opens the valves in the injection line.

The refueling water storage tank level protection logic consists of four level channels, with each level channel assigned to a separate process control protection set. Four refueling water storage tank level transmitters provide level signals to corresponding normally de-energized level channel bistables. Each level channel bistable would be energized on receipt of a refueling water storage tank level signal less than the low-low-1 level setpoint.

The two-out-of-four coincident logic is utilized in both protection cabinets A and B to ensure a trip signal in the event that two out of the four level channel bistables are energized. This trip signal, in conjunction with the "S" signal, provides the actuation signal to automatically open the corresponding containment sump isolation valves.

The low-low-1 refueling water storage tank level signal is also alarmed to inform the operator to initiate the manual action required to realign the charging and safety injection pumps for the recirculation mode. The manual switchover sequence that must be performed by the operator is delineated in Table 6.3-7. Following the automatic and manual switchover sequence, the two residual heat removal pumps would take suction from the containment sump and deliver borated water directly to two RCS cold legs. A portion of the Number 1 residual heat removal pump discharge flow would be used to provide suction to the two charging pumps which would also deliver directly to the RCS cold legs. A portion of the discharge flow from the Number 2 residual heat removal pump would be directed to the RCS cold legs. As part of the manual switchover procedure (see Table 6.3-7, Step 5), the suctions of the safety injection and charging pumps are cross connected so that one residual heat removal pump can deliver flow to the RCS and both safety injection and charging pumps, in the event of the failure of the second residual heat removal pump.

After approximately 5 to 6 hours, cold leg recirculation is terminated and hot leg recirculation is initiated. This is done to terminate any boiling in the core should the break be in one of the RCS cold legs. During this phase of recirculation, the SIPs discharge is aligned to supply water to all four RCS hot legs and the RHRPs discharge is aligned to supply water to RCS hot legs 1 and 4. The CCPs do not have the capability to feed the hot legs and continue to supply the cold legs.

6.3.2.2 Equipment and Component Descriptions

The component design and operating conditions listed in Table 6.3-1 are specified as the most severe conditions to which each respective component is exposed during either normal plant operation, or during operation of the ECCS. For each component, these conditions are considered in relation to the code to which it is designed. By designing the components in accordance with applicable codes, and with due consideration for the design and operating conditions, the fundamental assurance of structural integrity of the ECCS components is maintained. Components of the ECCS are designed to withstand the appropriate seismic loadings in accordance with their safety class as given in Table 3.2-2.

Descriptions of the major mechanical components of the ECCS follow:

a. Accumulators

The accumulators are pressure vessels partially filled with borated water and pressurized with nitrogen gas. During normal operation, each accumulator is isolated from the RCS by two check valves in series. Should the RCS pressure fall below the accumulator pressure, the check valves open and borated water is forced into the RCS. One accumulator is attached to each of the cold legs of the RCS. Mechanical operation of the swing disc check valves is the only action required to open the injection path from the accumulators to the core via the cold leg.

Connections are provided for remotely adjusting the level and boron concentration of the borated water in each accumulator during normal plant operation as required. Accumulator water level may be adjusted either by draining to the primary drain tank or by pumping borated water from the refueling water storage tank to the accumulator. Alternatively, the boron concentration may be adjusted by a feed and bleed process. This would involve pumping borated water into the accumulator from the refueling water storage tank, as described above, with simultaneous draining of the accumulator through the sample connection to the Containment Building drainage sump. Technical Specification actions related to out-of-service equipment during this evolution would be applied. Samples of the solution in the accumulators are taken periodically for checks of boron concentration.

Accumulator pressure is provided by a supply of nitrogen gas, and can be adjusted as required during normal plant operation; however, the accumulators are normally isolated from this nitrogen supply. Gas relief valves on the accumulators protect them from pressures in excess of design pressure.

The accumulators are located within the containment but outside of the secondary shield wall which protects them from missiles.

Accumulator gas pressure is monitored by indicators and alarms. The operator can take action as required to maintain plant operation within the requirements of the Technical Specification covering accumulator operability.

b. Residual Heat Removal Pumps

In the event of a LOCA, the residual heat removal pumps are started automatically on receipt of an "S" signal (see Dwg. NHY-503761). The residual heat removal pumps take suction from the refueling water storage tank during the injection phase and from the containment sump during the recirculation phase. Each residual heat removal pump is a single-stage vertical-position centrifugal pump.

A minimum flow bypass line is provided for the pumps to recirculate and return the pump discharge fluid to the pump suction should these pumps be started with the RCS pressure above their shutoff head. Once flow is established to the RCS, the bypass line is automatically closed (see Dwg. NHY-503764). This line prevents deadheading of the pumps and permits pump testing during normal operation.

The safety intent of Regulatory Guide 1.1 is met by the design of the ECCS so that adequate net positive suction head is provided to system pumps. In addition to considering the static head and suction line pressure drop, the calculation of available net positive suction head in the recirculation mode assumes that the vapor pressure of the liquid in the sump is equal to the containment ambient pressure. This assures that the actual available net positive suction head is always greater than the calculated net positive suction head.

The residual heat removal pumps are discussed further in Subsection 5.4.7. A pump performance curve is given in Figure 6.3-7. Available and required net positive suction head are shown in Table 6.3-1.

c. Centrifugal Charging Pumps

In the event of an accident, the charging pumps are started automatically on receipt of an "S" signal (see Dwg. NHY-503330), and are automatically aligned to take suction from the refueling water storage tank during injection (see Dwg. NHY-503335). During recirculation, suction is provided from the residual heat removal pump discharge.

These high head pumps deliver flow to the RCS at the prevailing RCS pressure. Each centrifugal charging pump is a multi-stage diffuser design, barrel-type casing with vertical suction and discharge nozzles.

A minimum flow bypass line is provided on each pump discharge to recirculate flow to the pump suction after cooling via the seal water heat exchanger during normal plant operation. Each minimum flow bypass line contains a motor-operated valve which closes on receipt of the safety injection signal. The miniflow isolation valve for each charging pump will re-open if the flow through its respective pump drops below the low flow setpoint. The valve will reclose in the presence of an "S" signal when the flow increases beyond the high flow setpoint (see Dwg. NHY-503398 & 503380). This signal also closes the valves to isolate the normal charging line and volume control tank and opens the charging pump/refueling water storage tank suction valves to align the high head portion of the ECCS for injection (see Dwg. NHY-503335). The charging pumps may be tested during power operation via the minimum flow bypass line.

A pump performance curve for the centrifugal charging pumps is presented in Figure 6.3-8. Available and required net positive suction head are shown in Table 6.3-1.

d. Safety Injection Pumps

In the event of an accident, the safety injection pumps are started automatically on receipt of an "S" signal (see Dwg. NHY-503900).

The pumps deliver water to the RCS from the refueling water storage tank during the injection phase, and from the containment sump via the residual heat removal pumps during the recirculation phase.

A minimum flow bypass line is provided on each pump discharge to recirculate flow to the refueling water storage tank in the event that the pumps are started with the RCS pressure above pump shutoff head. This line also permits pump testing during normal plant operation. Two parallel valves in series with a third, downstream of a common header, are provided in this line. These valves are manually closed from the control room as part of the ECCS realignment from the injection to the recirculation mode.

The common recirculation header for the safety injection pumps is seismically analyzed and is seismically supported.

A pump performance curve is presented in Figure 6.3-9. Available and required net positive suction head are shown in Table 6.3-1.

e. Residual Heat Exchangers

The residual heat exchangers are conventional shell and U-tube type units. During normal cooldown operation, the residual heat removal pumps recirculate reactor coolant through the tube side while component cooling water flows through the shell side. During emergency core cooling recirculation operation, water from the containment sump flows through the tube side. The tubes are seal welded to the tube sheet.

A further discussion of the residual heat exchangers is found in Subsection 5.4.7.

f. Valves

Design features employed to minimize valve leakage include:

- Where possible, packless valves are used.
- Other valves which are normally open, except check valves and those which perform a control function, are provided with backseats to limit stem leakage.

- Normally closed globe valves are installed with recirculation fluid pressure under the seat to prevent stem leakage of recirculated (radioactive) water.
- Relief valves are enclosed, i.e., they are provided with a closed bonnet.

1. Motor-Operated Valves

The seating design of all motor-operated valves is of the Crane flexible wedge design. This design releases the mechanical holding force during the first increment of travel so that the motor operator works only against the frictional component of the hydraulic unbalance on the disc and the packing box friction. The disc is guided throughout the full disc travel to prevent chattering and to provide ease of gate movement. The seating surfaces are hard faced to prevent galling and to reduce wear.

Where a gasket is employed for the body to bonnet joint, it is either a fully trapped, controlled compression, spiral-wound asbestos gasket with provisions for seal welding, or it is of the pressure seal design with provisions for seal welding. Many of the valves stuffing boxes were originally designed with a lantern ring leakoff connection with packing configurations which minimize stem seal leakage to the full extent possible by the design. Exceptions to this criterion are gate valves that have been determined to be susceptible to pressure locking, which have been modified to utilize the valve stem leakoff connection as a vent path for the bonnet cavity. These valves use only a single packing set. Based on industry recommendations, many of the double packed stuffing boxes have been modified to a single packing configuration. The motor operator incorporates a "hammer blow" feature that allows the motor to impact the discs away from the backseat upon opening or closing. This "hammer blow" feature not only impacts the disc but allows the motor to attain its operational speed prior to impact. Valves which must function against system pressure are designed so that they function with a pressure drop equal to full system pressure across the valve disc.

2. Manual Globe, Gate and Check Valves

Gate valves employ a wedge design and are straight through. The wedge is either split or solid. All gate valves have backseat and outside screw and yoke.

Globe valves, "T" and "Y" style, are full-ported with outside screw and yoke construction.

Check valves are spring-loaded lift piston types for sizes 2 inches and smaller, swing type for sizes 2½ inches to 4 inches and tilting-disc type for sizes 4 inches and larger. Stainless steel check valves have no penetration welds other than the inlet, outlet and bonnet. The check hinge is serviced through the bonnet.

The stem packing and gasket of the stainless steel manual globe and gate valves are similar to those described above for motor-operated valves. Carbon steel manual valves are employed to pass nonradioactive fluids only and therefore do not contain the double packing and seal weld provisions.

3. Accumulator Check Valves (Swing-Disc)

The accumulator check valve is designed with a low pressure drop configuration with all operating parts contained within the body.

Design considerations and analyses which ensure that leakage across the check valves located in each accumulator injection line will not impair accumulator availability are as follows:

(a) During normal operation, the check valves are in the closed position with a nominal differential pressure across the disc of approximately 1650 psi. Since the valves remain in this position except for testing or when called upon to open following an accident, and are therefore not subject to the abuse of flowing operation or impact loads caused by sudden flow reversal and seating, they do not experience significant wear of the moving parts, and are expected to function with minimal back leakage. The back leakage can be checked via the test connection as described in Subsection 6.3.4.

(b) When the RCS is being pressurized during the normal plant heatup operation, the check valves are tested for leakage as soon as there is a stable differential pressure of about 100 psi or more across the valve. This test confirms the seating of the disc and whether or not there has been an increase in the leakage since the last test. When this test is completed, the accumulator discharge line motor-operated isolation valves are opened and the RCS pressure increase is continued. There should be no increase in leakage from this point on since increasing reactor coolant pressure increases the seating force and decreases the probability of leakage.

(c) The experience derived from the check valves employed in the emergency injection systems indicates that the system is reliable and workable; check valve leakage has not been a problem. This is substantiated by the satisfactory experience obtained from operation of the Robert Emmett Ginna and subsequent plants where the usage of check valves is identical to Seabrook.

(d) The accumulators can accept some in-leakage from the RCS without affecting availability. Continuous in-leakage would require, however, that the accumulator volume be adjusted periodically to Technical Specification requirements.

4. Relief Valves

Relief valves are installed in various sections of the ECCS to protect lines which have a lower design pressure than the RCS. The valve stem and spring adjustment assembly are isolated from the system fluids by a bellows seal between the valve disc and spindle. The closed bonnet provides an additional barrier for enclosure of the relief valves. Table 6.3-2 lists the system's relief valves with their capacities and setpoints.

5. Butterfly Valves

Each main residual heat removal line has an air-operated butterfly valve (RH-HCV-606 and 607) which is normally open and is designed to fail in the open position. The actuator is arranged so that air pressure on the diaphragm overcomes the spring force, causing the linkage to move the butterfly to the closed position. Upon loss of air pressure, the spring returns the butterfly to the open position. These valves are left in the full-open position during normal operation to maximize flow from this system to the RCS during the injection mode of the ECCS operation. These valves are used during normal residual heat removal system (RHRS) operation to control cooldown flow rate.

Each residual heat removal heat exchanger bypass line has an air-operated butterfly valve which is normally closed and is designed to fail closed. Those valves (RH-FCV-618 and 619) are used during normal cooldown to avoid thermal shock to the residual heat exchanger.

6. Accumulator Motor-Operated Valve Controls

As part of the plant shutdown administrative procedures, the operator is required to close these valves. This prevents a loss of accumulator water inventory to the RCS, and is performed shortly after the RCS has been depressurized below the safety injection unblock setpoint. The redundant pressure and level alarms on each accumulator would remind the operator to close these valves, if any were inadvertently left open. Power is disconnected after the valves are closed.

During plant startup, the operator is instructed via procedures to energize and open these valves when the RCS pressure reaches the safety injection unblock setpoint. Monitor lights in conjunction with an audible alarm will alert the operator should any of these valves be left inadvertently closed once the RCS pressure increases beyond the safety injection unblock setpoint (see Dwg. NHY-503907). Once open, power is disconnected and remains off except during valve testing.

The accumulator isolation valves are not required to move during power operation or in a post-accident situation, except for valve testing. For a discussion of limiting conditions for operation and surveillance requirements of these valves, refer to the Technical Specifications.

For further discussion of the instrumentation associated with these valves, refer to Subsections 6.3.5, 7.3.1b and 7.6.4.

7. Motor-Operated Valves and Controls

Remotely operated valves for the injection mode which are under manual control (i.e., valves which normally are in their ready position and do not require a safety injection signal) have their position indicated on the control board. If a component is out of its proper position, its monitor light will indicate this on the control panel. At any time during operation, when one of these valves is not in the ready position for injection, this condition is shown visually on the board, and an audible alarm is sounded in the control room on a system basis, as part of the Bypass and Inoperable Status alarms.

The ECCS delivery lag times are given in Chapter 15. The accumulator injection time varies as the size of the assumed break varies since the RCS pressure drop will vary proportionately to the break size.

Inadvertent mis-positioning of a motor-operated valve due to a malfunction in the control circuitry in conjunction with an accident has been analyzed and found not to be a credible event for use in design.

Table 6.3-3 is a listing of motor-operated isolation valves in the ECCS showing interlocks, automatic features, and position indications.

8. Motor-Operated SI Isolation Valves and Controls

SI-V93, the combined recirculation isolation valve from both safety injection pumps, is a normally open, motor-operated valve. This valve is closed by the operators, from the control room, during the switch over to the recirculation mode of safety injection.

Red/green valve position indication and valve full-closed monitor light is provided on the main control board. Additionally, any time SI-V93 leaves the full open position, an annunciator alarms for both the "SI Train A Inoperative" and the "SI Train B Inoperative" status monitoring alarms.

To prevent spurious operation or operator error, the control circuit for the motor operator is equipped with a dual contactor arrangement (see Updated FSAR Figure 8.3-45). This circuit requires two separate operator actions, involving the normal valve control switch plus a separate key-operated switch, to reposition the valve.

6.3.2.3 Applicable Codes and Classifications

Applicable industry codes and classifications for the ECCS are discussed in Section 3.2.

6.3.2.4 Material Specifications and Compatibility

Materials employed for components of the ECCS are given in Table 6.3-4. Materials are selected to meet the applicable material requirements of the codes in Table 3.2-2 and the following additional requirements for compatibility with the reactor coolant during the recirculation phase following a LOCA:

a. All parts of components in contact with borated water are fabricated of or clad with austenitic stainless steel or equivalent corrosion- resistant material.

b. All parts of components in contact (internal) with sump solution during recirculation are fabricated of austenitic stainless steel or equivalent corrosion-resistant material.

c. Valve seating surfaces are hard faced with Stellite Number 6 or equivalent to prevent galling and to reduce wear.

d. Valve stem materials are selected for their corrosion resistance, high tensile properties, and resistance to surface scoring by the packing.

6.3.2.5 System Reliability

Reliability of the ECCS is considered for all aspects of the system, from initial design through periodic testing of the components during plant operation. The ECCS is a two train, fully redundant standby safeguard feature. The system has been designed and proven by analysis as having the ability to withstand any single credible active failure during injection, or any active or passive failure during recirculation, while still meeting the performance objectives described in Subsection 6.3.1.

Two trains of pumps, heat exchangers, and flow paths are provided for redundancy, as only one train is required to satisfy the performance requirements. The initiating signals for the ECCS are derived from independent sources, as measured from process (e.g., low pressurizer pressure) or environmental variables (e.g., containment pressure). Redundant as well as functionally independent variables are measured to initiate the safeguards signals. Each train is physically separated and protected where necessary so that a single event cannot initiate a common failure. Power sources for the ECCS are divided into two independent trains supplied from the emergency buses which can receive power either from onsite or offsite power sources. Sufficient diesel generating capacity is maintained onsite to provide power to each train. The diesel generators and their auxiliary systems are completely independent, and each supplies power to one of the two ECCS trains.

The reliability program extends to the procurement of the ECCS components such that only designs which have been proven by past use in similar applications are acceptable for use. The quality assurance program, as described in Chapter 17, assures receipt of components only after manufacture and test to the applicable codes and standards.

The preoperational testing program assures that the ECCS as designed and constructed will meet the functional requirements calculated in its design.

The ECCS is designed with the ability for online testing of most components so the availability and operational status can be readily determined.

In addition to the above, the integrity and operability of the ECCS is assured through examination of critical components during the routine in-service inspection.

a. Active Failure Criteria

The ECCS is designed to accept a single failure following the incident without loss of its protective function. The system design will tolerate the failure of any single active component in the ECCS itself or in the necessary associated service systems at any time during the period of required system operations following the incident.

A Failure Mode and Effect Analysis is presented in Table 6.3-5, which demonstrates that the ECCS can sustain the failure of any single active component in either the short or long term and still meet the level of performance for core cooling.

Since the operation of the active components of the ECCS following steam line rupture is identical to that following a LOCA, the same analysis is applicable. The ECCS can sustain the failure of any single active component and still meet the level of performance for the addition of shutdown reactivity.

b. Passive Failure Criteria

The following design philosophy assures the necessary redundancy in component and system arrangement to meet the intent of the General Design Criteria on single failure as it specifically applies to failure of passive components in the ECCS. Thus, for the long term, the system design is based on accepting either a passive or an active failure.

1. Redundancy of Flow Paths and Components for Long-Term Emergency Core Cooling

In design of the ECCS, Westinghouse utilizes the following criteria:

(a) During the long-term cooling period following a loss of coolant, the emergency core cooling flow paths shall be separable into two subsystems, either of which can provide minimum core cooling functions and return spilled water from the floor of the containment back to the RCS.

(b) Either of the two subsystems can be isolated and removed from service in the event of a leak outside the containment. Redundant motor-operated valves arranged in series are provided for this isolation function.

(c) Adequate redundancy of check valves is provided to tolerate failure of a check valve during the long term as a passive component.

(d) Should one of these two subsystems be isolated in this long-term period, the other subsystem remains operable.

(e) Provisions are also made in the design to detect leakage from components outside the containment, to collect this leakage, and to provide for maintenance of the affected equipment.

A single passive failure analysis is presented in Table 6.3.6. It demonstrates that the ECCS can sustain a single passive failure during the long-term phase and still retain an intact flow path to the core to supply sufficient flow to maintain the core covered and affect the removal of decay heat. The procedure followed to establish the alternate flow path also isolates the component which failed.

Thus, for the long-term emergency core cooling function, adequate core cooling capacity exists with one flow path removed from service.

2. Subsequent Leakage from Components in Safeguards Systems

With respect to piping and mechanical equipment outside the containment, considering the provisions for visual inspection and leak detection, leaks will be detected before they propagate to major proportions. A review of the equipment in the system indicates that the largest sudden leak potential would be the sudden failure of a pump shaft seal. Evaluation of leak rate, assuming only the presence of a seal retention ring around the pump shaft, showed that flows less than 50 gpm would result. Piping leaks, valve packing leaks, or flange gasket leaks tend to build up slowly with time and are considered less severe than the pump seal failure.

Larger leaks in the ECCS are prevented by the following:

(a) The piping is classified in accordance with ANS Safety Class 2 and receives the ASME Class 2 quality assurance program associated with this safety class.

(b) The piping, equipment and supports are designed to ANS Safety Class 2 seismic classification, permitting no loss of function for the design basis earthquake.

(c) The system piping is located within a controlled area on the plant site.

(d) The piping system receives periodic pressure tests, and is accessible for periodic visual inspection.

(e) The piping is austenitic stainless steel which, due to its ductility, can withstand severe distortion without failure.

(f) Instrument tubing is designed to the requirements of Regulatory Guide 1.151 as discussed in Subsection 7.1.2.12.

Based on this review, the design of the Primary Auxiliary Building and related equipment was verified for its ability to handle leaks up to a maximum of 50 gpm. Leakage would drain to and collect in the primary auxiliary building sump. Automatic initiation of the sump pumps at a predetermined setpoint would be indicated at the main control board and would alert the operator to an abnormal condition. Corrective action would include determining the location of the leak by visual inspection, and remote or manual isolation of the leak point from the rest of the system within 30 minutes.

c. Potential Boron Precipitation

Boron precipitation in the reactor vessel can be prevented by a backflush of cooling water through the core to reduce boil-off and resulting concentration of boric acid in the water remaining in the reactor vessel. This is accomplished by a switch from cold to hot leg recirculation about 5 to 6 hours following an accident.

The minimum Hot Leg Recirculation flow meets decay heat removal requirements at this time.

Three flow paths are available for hot leg recirculation of sump water. Each safety injection pump can discharge to two hot legs with suction taken from residual heat removal pump discharge either directly or indirectly via the charging pump cross connect. The residual heat removal pump(s) will also be aligned to deliver flow to the hot leg injection header.

Loss of one pump or one flow path will not prevent hot leg recirculation since redundant methods are available for use.

d. Submerged Valve Motors

All electrically operated valves in the ECCS required to be functional during and following a LOCA are located outside containment. All other electrical equipment in the ECCS that is required during post-LOCA is either located outside containment or above the maximum calculated water level inside containment.

6.3.2.6 Protection Provisions

The provisions taken to protect the system from damage that might result from dynamic effects are discussed in Section 3.6. The provisions to protect the system from missiles are discussed in Section 3.5. The provisions to protect the system from seismic damage are discussed in Sections 3.7, 3.9 and 3.10. Thermal stresses on the RCS are discussed in Section 5.2.

6.3.2.7 Provisions for Performance Testing

Test lines are provided for performance testing of the ECCS as well as individual components. These test lines and instrumentation are shown in Figure 6.3-1. All pumps have miniflow lines for use in testing operability. Additional information on testing can be found in Subsection 6.3.4.2.

6.3.2.8 Manual Actions

No manual operator actions are required for proper operation of the ECCS during the injection mode of operation. Only limited manual actions are required by the operator to realign the system for the cold leg recirculation mode of operation, and, after approximately 5 to 6 hours, for the hot leg recirculation mode of operation. These actions are delineated in Table 6.3-7.

The transfer from the injection mode to recirculation mode is initiated automatically and completed manually by operator action from the main control room. Protection logic is provided to automatically open the two containment recirculation sump isolation valves when two out of four refueling water storage tank level channels indicate a refueling water storage tank level less than a low-low level setpoint in conjunction with the initiation of the engineered safeguard actuation signal ("S" signal - see Dwg. NHY-503258). The automatic action would align the two residual heat removal pumps to take suction from the containment sump and deliver directly to the Reactor Coolant System. The automatic action also aligns the two containment building spray pumps to take suction from the containment sump and deliver to the containment building spray headers. It should be noted that the residual heat removal and containment building spray pumps would continue to operate during this transfer from injection mode to recirculation mode.

The two charging pumps and the two safety injection pumps would continue to take suction from the refueling water storage tank following the above automatic action, until manual operator action is taken to align these pumps in series with the residual heat removal pumps.

The consequences of the operator failing to act altogether will be loss of high head safety injection pumps and charging pumps.

The refueling water storage tank level protection logic consists of four level channels, with each level channel assigned to a separate process control protection set. Four refueling water storage tank level transmitters provide level signals to corresponding normally de-energized level channel bistables. Each level channel bistable would be energized on receipt of a signal that the refueling water storage tank level is less than the low-low level setpoint.

The two-out-of-four coincident logic is utilized in both protection cabinets A and B to ensure a trip signal in the event that two out of the four level channel bistables are energized. This trip signal, in conjunction with the "S" signal, provides the actuation signal to automatically open the corresponding containment sump isolation valves.

The first manual actions are required of the operator after the "Lo-Lo" level signal actuates the opening of the sump valves. The "Lo-Lo" signal also alarms at the MCB to alert the operators to the need for action.

Figure 6.3-10 shows a schematic of the tank, the level instrumentation setpoints and the various water volume allowances.

All level setpoints were selected to ensure a minimum required injection volume, adequate transfer volumes and, at the same time, to avoid any spurious alarm actuations.

The "high level" alarm setpoint was selected to assure that, during filling of the RWST, the operator is alerted prior to a possible spillage of water from refueling water storage tank via overflow.

The "tech spec" level alarm setpoint was selected to assure that the minimum required injection volume remains above the "Lo-Lo" level (transfer) setpoint. If the water level drops below the "tech spec" setpoint, the alarm sounds and the plant will be placed in the mode mandated by the plant technical specifications. A "tech spec approach" alarm is provided to alert the operator to a need for makeup prior to reaching a water level requiring plant shutdown.

Spurious alarm actuation is prevented by an adequate separation between the instrument error bands associated with each setpoint. In addition to this, temperature compensation is employed for "high level," "tech spec" and "tech spec approach" alarms to account for level changes due to temperature fluctuations.

Instrument error bands were calculated accounting for uncertainties such as measurement accuracy, calibration accuracy, signal drift, environment changes, etc.

The time from accident initiation to the first required manual actions is dependent on the initial tank water level, the flow rate out of the tank and the “Lo-Lo” level setpoint. The minimum time is calculated based on injecting the minimum required injection volume of 350,000 gallons. As shown on Figure 6.3-10, the minimum injection allowance is contained between extreme low range of the “tech spec” alarm error band and the extreme upper range of the “Lo-Lo” signal error band. The maximum flow rate out of the RWST is based on the “Maximum Safeguards” flow rate of 13,200 gpm out of the tank. Based on injecting the minimum injection allowance at a maximum rate of 13,200 gpm, the first manual operator actions are not required until approximately 26 minutes after accident initiation.

It should be noted that the entire injection volume is assumed to come from the RWST, neglecting the additional volume available in the spray additive tank.

Figure 6.3-10 depicts two additional allowances of RWST inventory. The transfer allowance is the volume of RWST inventory set aside to allow the operators sufficient time to complete the transfer from the injection mode to the recirculation mode of ECCS operation. This transfer allowance is the volume of water contained between the low range of the RWST Lo-Lo level setpoint and the high range of the RWST EMPTY alarm setpoint. The RWST EMPTY alarm setpoint is based on the postulated single failure discussed below. The shutoff or single failure allowance is the volume of RWST inventory between the RWST EMPTY alarm setpoint and the calculated level at which vortexing is possible for the flow rate from the RWST associated with the postulated worst case single failure that could occur during this transfer.

In the event of the design bases LOCA, the containment sump isolation valves open automatically upon actuation of the RWST LO-LO level signal. The combination of containment pressure and elevation head from the sump seats the check valves in the lines between the RWST, CBS, and RHR pumps (CBS-V3, -V7, -V55, -V56), reducing the flow rate out of the RWST to that of the safety injection and charging pumps; or approximately 1500 gpm. At this flow rate, the operators would have over 27 minutes to complete the transfer before the RWST EMPTY alarm could actuate. It should be noted that the RWST EMPTY alarm setpoint is based on the higher flow rate associated with the single failure discussed below, and only the safety injection and charging pumps would be susceptible to vortexing at this RWST level. However, operators would still secure these pumps if the transfer was not completed before the RWST EMPTY alarm was actuated.

In an accident for which the RWST water is at the minimum allowed temperature, the containment heat sinks are at a low temperature and the heat transfer rate in the containment is high, the containment pressure may be high enough to actuate spray, but not high enough to seat the check valves in the suction lines from the RWST to the RHR and CBS pumps. For this case, the high flow rate out of the RWST would continue until the tank suction isolation valves (CBS-V2, -V5) are closed by the operators. The operators would have over 3 minutes to close these valves before vortexing is calculated to occur. Assuming the operators take the full time allotted to close these two valves, this would still leave an additional 5 minutes to complete the transfer.

The limiting single failure for this design is the failure of one of the RWST isolation valves to close (CBS-V2, -V5). Note that the failure of one of the containment sump isolation valves to open has the same affect with respect to flow rate out of the tank, however, it occurs earlier in the transfer and the operator has additional time to respond. If one of the RWST isolation valves does not close, the flow rate out of the RWST is reduced from 13,200 gpm to 7400 gpm, as opposed to approximately 1500 gpm when both valves close. The RWST EMPTY alarm is designed for this single failure. If the operators are not able to get the affected valve closed, the RWST EMPTY alarm will sound, alerting them to immediately shut off any pumps still taking suction from the RWST. The shutoff allowance is established to give the operators 1 minute of operation between the EMPTY alarm and the level at which vortexing could potentially occur for shutting off the pumps. Note that though all of the pumps still taking a suction from the RWST are shut off when this alarm sounds, the operators only have to stop the affected RHR and CBS pumps in order to prevent vortexing. The safety injection and charging pumps could operate for over 11 additional minutes before reaching their calculated vortex level. After the pumps are stopped, the transfer is completed and all available pumps are restarted.

Following the automatic and manual transfer sequence, the two residual heat removal pumps would take suction from the containment sump and deliver borated water directly to two RCS cold legs. A portion of the Number 1 residual heat removal pump discharge flow would be used to provide suction to the two charging pumps which would also deliver directly to the RCS cold legs. A portion of the discharge flow from the Number 2 residual heat removal pump would be used to provide suction to the two safety injection pumps which would also deliver directly to the RCS cold legs. As part of the manual transfer, the suctions of the safety injection and charging pumps are cross connected so that one residual heat removal pump can deliver flow to the RCS and both safety injection and charging pumps, in the event of the failure of the second residual heat removal pump.

See Section 7.5 for process information available to the operator in the control room following and accident.

6.3.3 Performance Evaluation

Chapter 15 accidents that result in ECCS operation are as follows:

a. Inadvertent opening of a steam generator relief or safety valve (see Subsection 15.1.4)

b. Small break LOCA (see Subsection 15.6.5)

c. Large break LOCA (see Subsection 15.6.5)

d. Major secondary system pipe failure (see Subsection 15.1.5)

e. Steam generator tube failure (see Subsection 15.6.3).

Safety injection is actuated from any of the following:

a. Low pressurizer pressure

b. Low steamline pressure

c. High containment pressure

d. Manual initiation.

A safety injection signal will rapidly trip the main turbine, close all feedwater control valves, trip the main feedwater pumps, and close the feedwater isolation valves.

Following the actuation signal, the suction of the centrifugal charging pumps is diverted from the volume control tank to the refueling water storage tank. Simultaneously, the valves isolating the charging pumps from the injection header automatically open. The safety injection pumps also start automatically but operate at shut off head when the RCS is at normal pressure. The passive injection system (accumulators) and the low head system (residual heat removal pumps) also provide no flow at normal RCS pressure.

Figure 6.3-6 is a simplified illustration of the ECCS. The notes provided with Figure 6.3-6 contain information relative to the operation of the ECCS in its various modes. The modes of operation illustrated are full operation of all ECCS components, cold leg recirculation with residual heat removal pump Number 2 operating, and hot leg recirculation with residual heat removal pump Number 1 operating.

Lag times for initiation and operation of the ECCS are limited by pump startup time and consequential loading sequence of these motors onto the safeguard buses. Most valves are normally in the position conducive to safety; therefore, valve opening time is not considered for these valves. If there is no power blackout, all pump motors and valve motors are started immediately upon receipt of the "S" signal. In the case of a blackout, a 10 second delay is assumed for diesel startup, then pumps and valves are loaded according to the sequencer. The charging pumps will be applied to the buses in 10 seconds, the safety injection pumps will start in 15 seconds, and the residual heat removal pumps in 20 seconds. These times refer to time after receipt of the "S" signal, and are in addition to the time for attainment of speed of the diesel generators. See Subsection 8.3.1 for details of diesel generator operation. The time sequence of ECCS components is also discussed in Chapter 15 with the appropriate accident analysis.

6.3.3.1 Inadvertent Opening of a Steam Generator Relief or Safety Valve

The assumed steam release is typical of the capacity of any single steam dump, relief or safety valve. The boron solution provides sufficient negative reactivity to maintain the reactor well below criticality. The cooldown for this case is more rapid than the actual case of steam release from all steam generators through one steam dump, relief, or safety valve. The transient is quite conservative with respect to cooldown, since no credit is taken for the energy stored in the system metal other than that of the fuel elements or the energy stored in the steam generators. Since the transient occurs over a period of about 5 minutes, the neglected stored energy is likely to have a significant effect in slowing the cooldown. The analysis shows that there will be no return to criticality after reactor trip, assuming a stuck Rod Cluster Control Assembly, with offsite power available, and assuming a single failure in the engineered safety features. Since the reactor does not return to criticality, a Departure from Nucleate Boiling Ratio (DNBR) less than the safety analysis limit value does not exist.

6.3.3.2 Small Break LOCA

A LOCA is defined as a rupture of the RCS piping or of any line connected to the system. Ruptures of small cross section will cause expulsion of the coolant at a rate which can be accommodated by the charging pumps which would maintain an operational water level in the pressurizer permitting the operator to execute an orderly shutdown.

The maximum break size for which the normal makeup system can maintain the pressurizer level is obtained by comparing the calculated flow from the RCS through the postulated break against the charging pump makeup flow at normal RCS pressure, i.e., 2250 psia. A makeup flow rate from one centrifugal charging pump is adequate to sustain pressurizer level and pressure for a break through a 0.375 inch diameter hole. This break results in a loss of approximately 17.5 lb/sec (127 gpm at 130°F and 2250 psia).

The safety injection signal stops normal feedwater flow by closing the main feedwater line isolation valves and initiates emergency feedwater flow by starting emergency feedwater pumps.

The small break analyses deal with breaks of up to 1.0 ft^2 in area, where the safety injection pumps play an important role in the initial core recovery because of the slower depressurization of the RCS.

The RCS depressurization water level transients show that for a break of approximately 3.0 inch equivalent diameter, the transient is turned around and the core is recovering prior to accumulator injection. For a 3.5 inch equivalent diameter break, the core remains uncovered with a decreasing level until accumulator action. Thus, the maximum break size showing core recovery prior to accumulator injection will be approximately 3.0 inch equivalent diameter. Accumulator injection commences when pressure reaches 600 psia, i.e., approximately 1200 seconds for the 3.0 inch break size.

The analysis of this break has shown that the high head portion of the ECCS, together with accumulators, provide sufficient core flooding to keep the calculated peak clad temperature below required limits of 10 CFR 50.46. Hence, adequate protection is afforded by the ECCS in the event of a small break LOCA.

6.3.3.3 Large Break LOCA

A major LOCA is defined as a rupture 1.0 ft^2 or larger of the RCS piping including the double-ended rupture of the largest pipe in the RCS or of any line connected to that system. The boundary considered for LOCA as related to connection piping is defined in Section 3.6.

Should a major break occur, depressurization of the RCS results in a pressure decrease in the pressurizer. Reactor trip occurs and the Safety Injection System is actuated when the pressurizer low pressure trip setpoint is reached. Reactor trip and safety injection system actuation are also provided by a high containment pressure signal. These countermeasures will limit the consequences of the accident in two ways:

a. Reactor trip and borated water injection provide additional negative reactivity insertion to supplement void formation in causing rapid reduction of power to a residual level corresponding to fission product decay heat.

b. Injection of borated water ensures sufficient flooding of the core to prevent excessive clad temperatures.

When the pressure falls below approximately 600 psia, the accumulators begin to inject borated water. The conservative assumption is made that injected accumulator water bypasses the core and goes out through the break until the termination of the blowdown phase. This conservatism is again consistent with the Final Acceptance Criteria.

The pressure transient in the reactor containment during a LOCA affects ECCS performance in the following ways. The time at which end of blowdown occurs is determined by zero break flow which is a result of achieving pressure equilibrium between the RCS and the containment. In this way, the amount of accumulator water bypass is also affected by the containment pressure, since the amount of accumulator water discharged during blowdown is dependent on the length of the blowdown phase and RCS pressure at end of blowdown. During the reflood phase of the transient, the density of the steam generated in the core is dependent on the existing containment pressure. The density of this steam affects the amount of steam which can be vented from the core to the break for a given downcomer head, the core reflooding process, and thus, the ECCS performance. It is through these effects that containment pressure affects ECCS performance.

For breaks up to and including the double-ended severance of a reactor coolant pipe, the ECCS will limit the clad temperature to well below the melting point and assure that the core will remain in place and substantially intact with its essential heat transfer geometry preserved. See Table 15.6-1 for ECCS sequence of events.

For breaks up to and including the double-ended severance of a reactor coolant pipe, the ECCS will meet the Acceptance Criteria as presented in 10 CFR 50.46. That is:

a. The calculated peak fuel element clad temperature provides margin to the requirement of 2200°F.

b. The amount of fuel element cladding that reacts chemically with water or steam does not exceed 1 percent of the total amount of Zircaloy in the reactor.

c. The clad temperature transient is terminated at a time when the core geometry is still amenable to cooling. The cladding oxidation limits of 17 percent are not exceeded during or after quenching.

d. The core temperature is reduced and decay heat is removed for an extended period of time, as required by the long-lived radioactivity remaining in the core.

6.3.3.4 Major Secondary System Pipe Failure

The steam release arising from a rupture of a main steam pipe would result in energy removal from the RCS causing a reduction of coolant temperature and pressure. In the presence of a negative moderator temperature coefficient, the cooldown results in a reduction of core shutdown margin. There is an increased possibility that the core will become critical and return to power. A return to power following a steam pipe rupture is a potential problem. The core is ultimately shut down by the borated water injection delivered by the Safety Injection System.

Minimum capability for injection of the high concentration boric acid solution is assumed corresponding to the most restrictive single active failure in the Safety Injection System. The calculated transient delivery times for the borated water are listed in Table 15.1-1. In all cases, injection of the refueling water is preceded by the low concentration borated water, which is swept from the lines.

For the cases where offsite power is available, the sequence of events in the Safety Injection System is the following. After the generation of the safety injection signal (appropriate delays for instrumentation, logic, and signal transport included), the appropriate valves begin to operate and the high head safety injection pump starts. In 30 seconds, the valves are assumed to be in their final position and the pump is assumed to be at full speed. The volume containing the low concentration borated water is swept, of course, before the refueling water reaches the core. This delay, described above, is inherently included in the modeling.

In cases where the offsite power is not available, and additional 10 second delay is assumed to start the diesels and to load the necessary safety injection equipment onto them.

The analysis has shown that even assuming a stuck Rod Cluster Control Assembly with or without offsite power, and assuming a single active failure in the engineered safeguards, the core remains in place and intact. Radiation doses will not exceed 10 CFR 100 guidelines.

Although Departure from Nucleate Boiling (DNB) (with possible clad perforation) following a steam pipe rupture is not necessarily unacceptable and not precluded in the criterion, the above analysis, in fact, shows that no Departure from Nucleate Boiling occurs for any rupture assuming the most reactive Rod Cluster Control Assembly stuck in its fully withdrawn position.

6.3.3.5 Steam Generator Tube Failure

The accident examined is the complete severance of a single steam generator tube, assuming it to take place at power.

Assuming normal operation of the various plant control systems, the following sequence of events is initiated by a tube failure:

a. Pressurizer low pressure and low level alarms are actuated and charging pump flow increases in an attempt to maintain pressurizer level. On the secondary side there is a steam flow/feedwater flow mismatch before the trip as feedwater flow to the affected steam generator is reduced due to the additional break flow which is now being supplied to that unit.

b. Continued loss of reactor coolant inventory leads to a reactor trip and safety injection signals generated by an OTDT signal. The resultant plant cooldown also leads to a rapid change in pressurizer level. The safety injection signal automatically terminates normal feedwater supply and initiates emergency feedwater supply and initiates emergency feedwater addition.

c. The four steam generator blowdown and flash tank concentrates liquid monitors and the condenser off-gas radiation monitor will alarm indicating a sharp increase in radioactivity in the secondary system. A high radioactivity signal from any one of the four steam generator blowdown radiation monitors or the flash tank concentrates radiation monitor will automatically isolate the concentrates discharge from the blowdown flash tank.

d. The reactor trip automatically trips the turbine and, if offsite power is available, the steam dump valves open permitting steam dump to the condenser. In the event of a coincident station blackout, the steam dump valves would automatically close to protect the condenser. The steam generator pressure would rapidly increase resulting in steam discharge to the atmosphere through the steam generator safety and/or power-operated relief valves.

e. Following reactor trip, the continued action of emergency feedwater supply and borated safety injection flow (supplied from the refueling water storage tank) provide a heat sink which absorbs some of the decay heat. Thus, steam bypass to the condenser, or in the case of loss of offsite power, steam relief to atmosphere, is attenuated during the recovery procedure leading to isolation.

f. Safety injection flow results in increasing pressurizer water level. The time after trip at which the operator can clearly see returning level in the pressurizer is dependent upon the amount of operating auxiliary equipment.

A steam generator tube rupture will cause no subsequent damage to the RCS or the reactor core. An orderly recovery from the accident can be completed even assuming simultaneous loss of offsite power.

6.3.3.6 Existing Criteria Used to Judge the Adequacy of the ECCS

Criteria from 10 CFR 50.46:

a. Peak clad temperature calculated shall not exceed 2200°F.

b. The calculated total oxidation of the clad shall nowhere exceed 17% of the total clad thickness before oxidation.

c. The calculated total amount of hydrogen generated from the chemical reaction of the clad with water or steam shall not exceed 1 percent of the hypothetical amount that would be generated if all of the metal in the clad cylinders surrounding the fuel, excluding the clad around the plenum volume, were to react.

d. Calculated changes in core geometry shall be such that the core remains amenable to cooling.

e. After any calculated successful initial operation of the ECCS, the calculated core temperature shall be maintained at an acceptable low value and decay heat shall be removed for the extended period of time required by long-lived radioactivity remaining in the core.

In addition to and as an extension of the Final Acceptance Criteria, two accidents have more specific criteria as shown below.

In the case of the inadvertent opening of a steam generator relief or safety valve, an additional criteria for adequacy of the ECCS is: assuming a stuck Rod Cluster Control Assembly, offsite power unavailable, and a single failure in the engineered safety features, there will be no return to criticality after reactor trip for a steam release equivalent to the spurious opening, with failure to close, of the larger of a single steam dump, relief, or safety valve.

For a major secondary system pipe failure, the added criteria is: assuming a stuck RCCA with or without offsite power, and assuming a single failure in the engineered safeguards, the core remains in place and intact.

6.3.3.7 Use of Dual Function Components

The ECCS contains components which have no other operating function, as well as components which are shared with other systems. Components in each category are as follows:

a. Components of the ECCS which perform no other function are:

1. One accumulator for each loop which discharges borated water into its respective cold leg of the reactor coolant loop piping.
2. Two safety injection pumps, which supply borated water for core cooling to the RCS. (May be used during check valve testing also.)
3. Associated piping, valves and instrumentation.

b. Components which also have a normal operating function are:

1. Residual Heat Removal Pumps and the Residual Heat Exchangers

   These components are normally used during the latter stages of normal reactor cooldown and when the reactor is held at cold shutdown for core decay heat removal or for flooding the refueling cavity. However, during all other plant operating periods, they are aligned to perform the low head injection function.

2. Centrifugal Charging Pumps

   These pumps are normally aligned for charging service. As a part of the Chemical and Volume Control System, the normal operation of these pumps is discussed in Subsection 9.3.4.

3. Refueling Water Storage Tank

   This tank is used to fill the refueling canal for refueling operations and to provide makeup to the spent fuel pool. However, during all other plant operating periods, it is aligned to the suction of the safety injection pumps, and the residual heat removal pumps. The charging pumps are automatically aligned to the suction of the refueling water storage tank upon receipt of the safety injection signals or a volume control tank low level signal. During normal operation they take suction from the volume control tank.

An evaluation of all components required for operation of the ECCS demonstrates that either:

a. The component is not shared with other systems, or

b. If the component is shared with other systems, it is either aligned during normal plant operation to perform its accident function or, if not aligned for its accident function, two valves in parallel are provided to align the system not utilized for injection and two valves in series are provided to isolate portions of the system not utilized for injection. These valves are automatically actuated by the safety injection signal.

Table 6.3-8 indicates the alignment of components during normal operation, and the realignment required to perform the accident function.

In all cases of component operation, safety injection has the priority usage so that an "S" signal will override all other signals and start or align systems for injection.

6.3.3.8 Limits on System Parameters

The analyses show that the design basis performance characteristic of the ECCS is adequate to meet the requirements for core cooling following a LOCA with the minimum engineered safety features equipment operating. In order to ensure this capability in the event of the simultaneous failure to operate any single active component, Technical Specifications are established for reactor operation.

Normal operating status of ECCS components is given in Table 6.3-9.

The ECCS components are available whenever the coolant energy is high and the reactor is critical. During low temperature operation there is a negligible amount of stored energy in the coolant and low decay heat; therefore, an accident comparable in severity to accidents occurring at operating conditions is less probable and fewer ECCS components are required.

The principal system parameters and the number of components which may be out of operation or in test, quantities and concentrations of coolant available, and allowable time in a degraded status are illustrated in the Technical Specifications. If efforts to repair the faulty component are not successful, the plant is placed into a lower operational status, i.e., hot standby to hot shutdown, hot shutdown to cold shutdown, etc.

6.3.4 Tests and Inspections

6.3.4.1 Preoperational Performance Tests

Preoperational performance testing of the ECCS is discussed in Chapter 14.

6.3.4.2 Reliability Tests and Inspections

Capability is provided for routine periodic testing of the ECCS components and all necessary support systems at power. Valves which operate after a LOCA are operated through a complete cycle, and pumps are operated individually in this test on their miniflow lines. The charging pumps also can be tested by their normal charging function. If such testing indicates a need for corrective maintenance, the redundancy of equipment in these systems permits such maintenance to be performed without shutting down or reducing load under certain conditions. These conditions include considerations such as the period within which the component should be restored to service and the capability of the remaining equipment to provide the minimum required level of performance during such a period.

The operation of the remote stop valve and the check valve in each accumulator tank discharge line may be tested by opening the remote test line valves just downstream of the stop valve and check valve. Flow through the test line can be observed on instruments, and the opening and closing of the discharge line stop valve can be sensed on this instrumentation.

Where series pairs of check valves form the high pressure to low pressure isolation barrier between the RCS and safety injection system piping, periodic testing of these check valves must be performed to provide assurance that certain postulated failure modes will not result in a loss of coolant from the low pressure system outside containment with a simultaneous loss of safety injection pumping capacity.

The safety injection system test line subsystem provides the capability for determination of the integrity of the pressure boundary formed by series check valves. The tests performed verify that each of the series check valves can independently sustain differential pressure across its disc, and also verify that the valve is in its closed position. The required periodic tests are to be performed after each refueling just prior to plant startup, after the RCS has been pressurized.

Lines in which the series check valves are to be tested are the safety injection pump cold and hot leg injection lines and the residual heat removal pump cold and hot leg injection lines.

To implement the periodic component testing requirements, Technical Specifications have been established. During periodic system testing, a visual inspection of pump seals, valve packings, flanged connections, and relief valves is made to detect leakage. In-service inspection provides further confirmation that no significant deterioration is occurring in the ECCS fluid boundary.

Design measures have been taken to assure that the following testing can be performed:

a. Active components may be tested periodically for operability (e.g., pumps on miniflow, certain valves, etc).

b. An integrated system actuation test* can be performed when the plant is cooled down and the RHRS is in operation.

c. An initial flow test of the full operational sequence can be performed.

The design features which assure this test capability are specifically:

a. Power sources are provided to permit individual actuation of each active component of the ECCS.

b. The safety injection pumps can be tested periodically during plant operation using the minimum flow recirculation lines provided.

c. The residual heat removal pumps are used every time the RHRS is put into operation. They can also be tested periodically when the plant is at power using the miniflow recirculation lines.

d. The centrifugal charging pumps are either normally in use for charging service or can be tested periodically on miniflow.

e. Remote operated valves can be exercised during routine plant maintenance.

f. Level and pressure instrumentation is provided for each accumulator tank for continuous monitoring of these parameters during plant operation.

g. Flow from each accumulator tank can be directed through a test line to determine valve operability.

h. A flow indicator is provided in the charging pump, safety injection pump, and residual heat removal pump headers. Pressure instrumentation is also provided in these lines.

i. An integrated system test can be performed when the plant is cooled down and the RHRS is in operation. This test demonstrates the operation of the valves, pump circuit breakers, and automatic circuitry including diesel starting and the automatic loading of ECCS components of the diesels (by simulating a loss of offsite power in conjunction with an SI actuation test signal).

---

* Details of the testing of the sensors and logic circuits associated with the generation of the safety injection signal, together with the application of this signal to the operation of each active component, are given in Section 7.2.

See the Technical Specifications for the selection of test frequency, acceptability of testing and measured parameters. ECCS components and systems are designed to meet the intent of the ASME Code, Section XI for in-service inspection.

6.3.5 Instrumentation Requirements

Instrumentation and associated analog and logic channels employed for initiation of ECCS operation are discussed in Section 7.3. This section describes the instrumentation employed for monitoring ECCS components during normal plant operation and ECCS post accident operation. All alarms are annunciated in the control room.

6.3.5.1 Temperature Indication: Residual Heat Exchanger Temperature

The fluid temperature at both the inlet and the outlet of each residual heat exchanger is recorded in the control room.

6.3.5.2 Pressure Indication

a. Charging Pump Inlet and Discharge Pressure

There is local pressure indication at the suction and discharge of each centrifugal charging pump.

b. Safety Injection Pump Suction Pressure

There is a locally mounted pressure indicator at the suction of each safety injection pump.

c. Safety Injection Pump Discharge Pressure

Safety injection pump discharge pressure is indicated in the control room for both pumps.

d. Accumulator Pressure

Duplicate pressure channels are installed on each accumulator. Pressure indication in the control room and high and low pressure alarms are provided by each channel.

e. Test Line Pressure

A local pressure indicator used to check for proper seating of the system check valves between the injection lines and the RCS is installed on the leakage test line. The pressure is also indicated on the control board.

f. Residual Heat Removal Pump Suction Pressure

Local pressure indication is provided at the inlet to each residual heat removal pump.

g. Residual Heat Removal Pump Discharge Pressure

Residual heat removal pump discharge pressure for each pump is indicated in the control room. A high pressure alarm is actuated by each channel.

h. Containment Building Spray Pumps Discharge Pressure

Containment building spray pump discharge pressure is indicated in the control room for both pumps.

6.3.5.3 Flow Indication

a. Charging Pump and Injection Header Flow

Flow for each centrifugal charging pump and the total centrifugal charging pump injection flow are indicated in the control room. A low-flow alarm for each pump is provided on the main control board.

b. Safety Injection Pump Flow

Injection flow for each of the safety injection pumps is indicated in the control room. A low-flow alarm for each pump is provided on the main control board.

c. Safety Injection Pump Minimum Flow

A flow indicator is installed in the safety injection pump minimum flow line.

d. Test Line Flow

Local and main control board indication of the leakage test line flow is provided to check for proper seating of the system check valves between the injection lines and the RCS.

e. Residual Heat Removal Pump Cold Leg Injection Flow

The flow from each residual heat removal subsystem to the RCS cold legs is indicated in the control room. These instruments also control the residual heat removal bypass valves, maintaining constant return flow to the RCS during normal cooldown.

f. Residual Heat Removal Pump Minimum Flow

A flowmeter installed in each residual heat removal pump discharge header provides control for the valve located in the pump minimum flow line. A low-flow alarm is provided on the main control board.

6.3.5.4 Level Indication

a. Refueling Water Storage Tank Level

Three separate level indicators are available at the main control board, from three separate level transmitters. Two channels are recorded. Apart from this, four channels of RWST level are provided to the ESF portion of the protection system. A low-low level, 2/4 channels, in combination with the "S" signal will generate an "ECCS/CONTN SPRAY RECIRC" signal. This signal is used to open the containment sump isolation valves. The following alarms are available through the computer:

1. RWST Level High
2. RWST Level Approaching Technical Specification
3. RWST Level Technical Specification Limit
4. RWST Level Lo-Lo at Recirc Setpoint
5. RWST Empty

Recirculation actuation is indicated on the control board by a monitoring light grouped with the appropriate valve position lights.

b. Accumulator Water Level

Duplicate water level channels are provided for each accumulator. Both channels provide indication in the control room and actuate high and low water level alarms.

c. Spray Additive Tank Level

Two level indication channels are provided in the control room.

d. Containment Flood Level

Level indication is provided in the control room on a per train basis.

e. Encapsulated Tank for Containment Recirculation Sump Valves

Water accumulation inside this tank is alarmed in the control room. This indicates leakage from the containment sump recirculation valves.

6.3.5.5 Valve Position Status Monitoring Indication

In addition to red (open) and green (closed) position indicating lights located above the associated control switch, the positions of the valves in Table 6.3-3 are also indicated by arrays of monitoring status lights at the main control board. These accident DBE status lights monitor the status of various engineered safeguard equipment following an accident and/or other Design Basis Events (DBE). The grouping of these lights provides the operator with a quick and easy identification of the required status of the important equipment for the various operational modes following an accident. The lights are grouped and are designed to go on upon these events occurring. Deviations are quickly identified by the light(s) failing to go on.

Isolation valves are provided with red (open) and green (closed) position-indicating lights located above the associated control switch. These lights are actuated by valve motor-operator limit switches or stem-mounted switches, as applicable. A monitor light for each isolation valve that is on when the valve is in isolation position is provided in an array of monitor lights located on the MCB. For valves whose position indication lights are powered independently from the control circuit, control power availability is indicated by an indicating light at the MCB.

6.4 HABITABILITY SYSTEMS

The habitability systems include the control room complex which houses the controls to operate the plant safely under normal conditions and maintain it in a safe condition under all postulated accident conditions, as well as the supporting equipment, supplies and procedures for an emergency team of 10 operating and 25 technical support personnel. The Technical Support Center is in the control room complex and has the capacity to accommodate 25 technical support personnel.

6.4.1 Design Bases

The control room complex design provides specific areas for continuous occupancy by the station operating personnel and the technical support center personnel during postulated emergency conditions, including equipment and materials to which the operators may require access.

The structural design of the control room complex together with its supporting systems will ensure access and occupancy under accident conditions without occupants receiving radiation exposures in excess of 5 rem total effective dose equivalent (TEDE) for the duration of the accident.

The control room complex has sanitary facilities and a first aid kit.

The Control Room Ventilation System, which includes redundant emergency makeup air/filtration subsystems, will prevent the buildup of airborne particulates and radioactive iodines within the control room complex during an accident.

Equipment, including necessary instrumentation, controls and procedures are provided at appropriate locations outside the control room with the design capability for (1) initiating prompt hot shutdown of the reactor and maintenance of the unit in a safe hot shutdown condition and (2) with a capability for subsequent cold shutdown of the reactor.

The ventilation design will allow unit operation from the isolated control room without makeup or exhaust air for a period of time of at least thirty hours before the carbon dioxide buildup would reach the concentration of 0.6 percent by volume. (Carbon dioxide concentration would not exceed 3 percent within 290 hours. At 1.5 percent, basic performance and physiological functions are not affected, but concentrations of 3 percent by volume should not be exceeded. Per ASHRAE Handbook, 1978 Applications, Chapter 12.)

Both control room makeup air intakes are located at a distance sufficiently away from each other and from major potential accident release points to minimize control room contamination in the event of a release of airborne radioactivity or other toxic substances.

The control room complex is maintained at a positive pressure of at least ⅛" w.g. with respect to outside and the adjacent cable spreading room. This positive pressure prevents the infiltration of hazardous contaminants. Self-contained breathing apparatus is supplied within the complex to provide breathing protection in the presence of hazardous contaminants.

The control room envelope boundary is designed and maintained so that unfiltered air inleakage is limited to ≤ 150 cfm during the emergency mode of operation.

Redundant air conditioning systems are provided to ensure that the control room atmosphere is maintained within acceptable temperature and humidity limits for equipment operability and personnel comfort.

Meteorological information instruments are provided. These instruments aid the operator in deciding to isolate a contaminated makeup air intake if necessary.

The habitability of the control room complex will not be compromised by the simultaneous occurrence of an SSE, a loss of offsite power and a loss-of-coolant accident.

The active and passive components of the Control Room Ventilation System provide an environment that is consistent with the requirements of General Design Criterion 19, which are to provide adequate ventilation air, maintain positive pressure to prevent infiltration of contaminants, temper the air for operator comfort, remove equipment heat, and maintain the control room below the guideline radiation dose of 5 rem TEDE.

6.4.2 System Design

The habitability systems include:

a. A concrete radiation shielded control room (Subsection 12.3.2)

b. Heating, Ventilating and Air Conditioning Systems (Subsection 9.4.1)

c. Redundant normal makeup air fans and associated discharge dampers

d. Redundant emergency makeup air fans and associated HEPA/carbon/HEPA filtering units for airborne particulate and iodine removal from all makeup air and a portion of the total control room recirculation air under accident conditions

e. Radiation and smoke monitored dual remote air intakes (Subsection 12.3.4)

f. Meteorological Information System (Section 2.3)

g. Fire Protection System (Subsection 9.5.1)

h. Full-face emergency breathing apparatus

i. Communications (Subsection 9.5.2)

j. Normal and emergency lighting (Subsection 9.5.3)

k. Toilet facilities

l. Medical supplies

m. Kitchen area.

6.4.2.1 Definition of Control Room Envelope

The control room occupies the entire 75'-0" level of the Control Building, and includes the main control room area, computer room, Technical Support Center, office, conference room and library, emergency storage room, HVAC equipment room, kitchen and sanitary facilities, as shown in Figure 1.2-32. All controls, equipment and materials to which the control room operator would require access during an emergency are contained within this envelope, except for the makeup air intakes' manual isolation valves which are located on elevation 51'-6" of the Diesel Generator Building.

6.4.2.2 Ventilation System Design

Details of the control room complex ventilation and filtration systems are described in Subsections 9.4.1 and 6.5.1. An air flow diagram of the Control Room Ventilation System which identifies equipment, ducting, dampers, instrumentation and air flow rates for both normal and emergency modes is shown in Figure 9.4-1, Figure 9.4-2, Figure 9.4-3, Figure 9.4-25; major components and their major design parameters are included in Table 9.4-1 and Table 6.5-6.

Two remote air intakes (east and west) are provided to furnish makeup air to the control room complex. The locations were selected to preclude both intakes from being susceptible to accident-generated airborne radioactivity or toxic gases at the same time. The east makeup air intake is located approximately 380 feet northeast from the center of the Unit 1 containment structure. The west intake is located approximately 500 feet southwest of the Unit 1 containment structure (see Figure 1.2-1).

The east air intake consists of a vertical 12-inch diameter carbon-steel pipe terminating in a tee-section. Both openings are protected by ½-inch square stainless steel wire mesh welded to the inside diameter of the respective opening. Protection of the intake against tornado missiles is provided by a reinforced concrete slab (see Figure 6.4-1). The west air intake consists of a vertical 12-inch diameter carbon-steel pipe terminating in a 180° bend. The opening is protected by ½-inch square screen and security grating welded to the inside diameter. A portion of the west intake pipe above grade adjacent to the cooling tower wall and approximately a 2-foot vertical section just below grade is not protected against tornado missiles. The unprotected 12-inch pipe, the vertical section above and below grade, and the 180° bend (see Figure 6.4-2) have an equivalent length of about 15 feet. This low effective target area results in a low mean value probability, calculated in the range of 2×10^{-9} to 3×10^{-7} per year, for tornado missile impact. Smoke monitoring equipment for the east intake, which alarms in the control room, is installed in a vault beneath the slab and within the fence enclosed area. Radiation monitoring equipment for the east air intake, which alarms in the control room, is located within the pipe in the Diesel Generator Building. Radiation and smoke monitoring equipment for the west intake, which also alarms in the control room, is located within the pipe in the Diesel Generator Building. The Diesel Generator Building is located within the protected area security fence, and access to the building is controlled by security doors which are part of the station access control system. Environmental conditions within the east intake vault is maintained by convection heaters and a sump pump.

The makeup air is transported via heavy wall carbon steel pipes from the remote air intakes to the control room HVAC equipment room (see Figure 9.4-1, Figure 9.4-2, Figure 9.4-3). The pipe enters the control room complex through the floor of one of the redundant filter units. The makeup air enters a tee located in a compartment of the filter unit upstream of the various filter components. The makeup air divides so that a portion of the air discharges through an isolation damper then enters this compartment, while the remainder of the air enters the branch leg of the tee to the interconnecting ductwork of the redundant filter unit. The filter units and connecting ductwork are located within the control room envelope.

During normal operations, makeup air is drawn from both remote intakes and delivered to the control room complex by one of the two redundant normal makeup air fans. The normal makeup air fans and associated discharge dampers are located outside the control room envelope on the 50'-0" elevation of the Diesel Generator Building. The air passes through medium efficiency prefilter(s) and electric heater(s) in both emergency filter units prior to discharging through an orifice into the control room HVAC equipment room. The prefilters remove dust and other airborne particulates and the heaters operate continuously to maintain the carbon filter relative humidity at or below 70 percent thereby optimizing carbon adsorber efficiency and life.

Under emergency conditions, makeup air is drawn from both remote air intakes and delivered to the control room complex by two fully redundant emergency filtration system fans. One hundred percent of the makeup air passes through the prefilter and heater and a HEPA-Carbon-HEPA filter configuration in either or both emergency filter units prior to discharging into the control room HVAC equipment room. In addition, approximately 2 percent of the total control room complex recirculation air flow, (i.e., including the air conditioning system flow rate) is drawn through the HEPA-Carbon-HEPA filter configuration in either or both emergency filter units. The HEPA filter(s) and carbon adsorber(s) are designed to remove radioactive airborne particulates and iodines (see Subsection 6.5.1 for filter design specifications). Under emergency conditions, the normal makeup air fans are automatically tripped off and their associated discharge dampers closed. The makeup air is transported to the control room via piping and backdraft dampers configured in parallel which bypass the normal makeup air fans and dampers. The backdraft dampers preclude short cycling of air during normal operations.

The exhaust air and supply air registers are adequately separated to preclude recycling stale air and other noxious gases. The outside makeup air intake and the point of discharge for the control room exhaust are also adequately separated to preclude recycling stale air and other noxious gases.

During normal operations, the modulating damper in the exhaust ductwork controls the amount of air being exhausted thereby maintaining a positive pressure within the control room complex. The damper is under the control of three static pressure sensing devices. The first pressure sensing point for the complex is in the HVAC equipment room, which is slightly lower in pressure than the remainder of the control room complex. The HVAC equipment room is maintained at least ⅛" w.g. above the outside atmospheric pressure, the second sensing point, and at least ⅛" w.g. above the cable spreading room, the third pressure sensing point.

Under emergency conditions, the exhaust system isolates by automatic trip of the exhaust fan and closure of the modulating damper and redundant isolation damper. The emergency makeup air is adequate to maintain the complex at a pressure at least ⅛" w.g. greater than the outside atmospheric and cable spreading room pressures. Air is exhausted from the complex by exfiltration.

The following system components are powered or controlled from the Emergency Electrical Distribution System, to ensure operating power during all modes of operation:

- The normal makeup air fans and associated discharge dampers
- Emergency makeup air fans and associated discharge dampers
- Filter system air heaters
- Radiation Monitoring Instrumentation System
- Exhaust system isolation dampers (Isolation Control System only).

The normal makeup air fans are electrically "cross-trained" with their associated discharge dampers, that is, the damper configured immediately downstream of the Train A fan is powered from the Train B vital bus and is controlled by the Train B control system. The damper configured immediately downstream of the Train B fan is powered from the Train A vital bus and is controlled by the Train A control system. This design ensures isolation of the normal makeup air system (i.e., trip of each makeup air and/or closure of its associated discharge damper) under emergency conditions regardless of any single active failure.

All automatic system dampers are pneumatically actuated and are designed to fail in the safe position (emergency mode configuration) on loss of instrument air.

Controls for habitability system components are located in the control room complex.

The normal makeup air fans and discharge dampers are controlled from the main control board (MCB). The components are manually actuated. Detection of high radiation in either remote intake will automatically isolate the normal makeup air subsystem. Actuation of the emergency makeup air and filtration subsystem fans will automatically isolate the normal makeup air subsystem. Failure of a vital bus or loss of instrument air will also isolate the system.

The emergency makeup air and filtration subsystem fans and discharge dampers are automatically actuated upon detection of high radiation in either remote intake or upon generation of a safety injection 'S' signal. The filtration subsystem can also be normally actuated from the MCB.

The exhaust subsystem fan and discharge dampers are controlled from the MCB. The subsystem will automatically isolate upon loss of control room pressurization, detection of high radiation in either remote intake, or actuation of the filtration subsystem fans.

The safety-related active components of the system are designed to seismic Category I requirements, and satisfy the design criteria of IEEE Standard 279 and other industry standards for electrical equipment, as defined in Subsection 8.1.4. No single failure of any of the active components will degrade the system's performance, as shown in Table 6.4-1.

The safety-related passive components (i.e., pressure boundary) of the makeup air system, ducts and filters, are also designed to seismic Category I requirements.

All safety-related active and passive components of the system are contained in missile-protected buildings, are underground, or in the case of some piping, consist of such a small exposed area that the possibility of being struck by a tornado missile is negligibly small. Specifically, the mean value probability of a missile impacting the unprotected portion of the west air intake is in the range of 2×10^{-9} to 3×10^{-7} per year. No internally generated missiles which could impair the system's ability to perform its safety-related functions are credible.

The system is designed to meet the intent of 10 CFR 50, Appendix A, General Design Criterion (GDC) 19, NUREG-0800 (Standard Review Plan) Section 6.4 and Subsection 6.5-1, and Regulatory Guides 1.52, 1.78, and 1.196.

The system is monitored and regulated by a Control Room Envelope Habitability Program which ensures that the control room and its Operators are in a condition to assure public safety during all modes of operation. It provides measures to allow the control room habitability systems (CRHS) to maintain a habitable environment for operators under normal and abnormal conditions, and identifies compensatory measures if habitability is in question.

6.4.2.3 Leak Tightness

The only openings in the control room envelope boundaries are the sealed cable penetrations, two personnel accesses, the exhaust air duct with isolation dampers, and building construction joints. The primary personnel access way is a double-door configuration. The total complex outleakage with the exhaust subsystem isolated is calculated to be 165 cfm at a pressure of (+) ⅛" w.g.

The control room envelope (CRE) boundary may be opened intermittently under administrative control. This applies only to openings in the CRE boundary that can be rapidly restored to the design condition, such as doors, hatches, floor plugs, and access panels. For entry and exit through doors, the administrative control of the opening is performed by the person(s) entering or exiting the area. For other openings that exceed the allowable opening size, these controls should be proceduralized and consist of stationing a dedicated individual at the opening who is in continuous communication with the operators in the CRE. This individual will have a method to rapidly close the opening and to restore the CRE boundary to a condition equivalent to the design condition when a need for CRE isolation is indicated. Unfiltered air inleakage testing (tracer gas testing) will be performed, as part of the control room habitability program, at a frequency of 6 years to ensure that the CRE boundary is meeting the design requirements.

6.4.2.4 Interaction with Other Zones and Pressure-Containing Equipment

a. Interaction with Other Zones

There are no potential adverse interactions between the control room complex ventilation zones and adjacent zones that could transfer toxic or radioactive contaminants into the control room. No ducts or ventilation piping from any other zone penetrates the control room envelope.

Only the remote air intakes, makeup air piping and associated isolation valves, and normal makeup air fans and discharge dampers are located outside the control room envelope. This portion of the system is heavy carbon steel piping with primarily welded construction to minimize infiltration. The emergency makeup air and filtration subsystem fans are located within the control room envelope and downstream of their associated filter components. This configuration maintains the filter units at a negative pressure precluding makeup air from bypassing the filter components under emergency conditions.

The exhaust and static pressure control subsystem functions to maintain a positive pressure in the control room with respect to the outside and cable spreading room during normal operations. The pneumatically operated modulating damper in the exhaust ductwork controls the amount of air being exhausted and, thereby, maintains a positive pressure within the control room complex. The damper is under the control of three static pressure sensing devices. The pressure sensing point for the complex is in the HVAC equipment room, which is slightly lower in pressure than the remainder of the control room envelope. The mechanical equipment room is kept at least ⅛" w.g. above the outside atmospheric pressure, the second pressure sensing point, and at least ⅛" w.g. above the cable spreading room at all times, the third pressure sensing point.

Under emergency conditions, the exhaust duct and associated control room envelope penetration are isolated by redundant dampers configured in series.

During normal operation, 1000 cfm of makeup air will be delivered to the control room complex. Approximately 145 cfm will be exfiltrated and the remaining 855 cfm will be exhausted. Under emergency conditions, approximately 600 cfm of makeup air will be delivered to the control room complex all of which will be exfiltrated.

An SSE will not provide an exfiltration path for control room complex air that will negate the ability to maintain a positive pressure since the Diesel Generator Building and Control Building are seismic Category I structures. The intake air equipment and welded piping to the control room complex are also seismic Category I.

b. Pressure-Containing Equipment

The pressure-containing equipment in the Control Room Complex consists of refrigerant lines, Computer Room Halon system, fire extinguishers, instrument air operated equipment, and self-contained breathing apparatus.

The Computer Room Air Conditioning Refrigerant System is nonsafety-related, nonseismic Category I and contains 10 pounds of Refrigerant 22.

The Uniform Mechanical Code, 1976 Edition, Section 1505 allows 22 pounds of Refrigerant 22 per 1,000 cubic feet of occupied space. The control room complex envelope is 246,000 cubic feet. The refrigerant charge of 10 pounds in the Computer Room Air Conditioning System is well below the allowable 22 pounds per 1,000 cubic feet.

The computer room Halon 1301 system is capable of a total concentration of 5 percent of the computer room volume of 13,340 cubic feet. The release of the entire volume of Halon into the control room complex envelope would result in a concentration of 0.30 percent. The National Fire Protection Association Code, Section 12A, lists 5 to 7 percent concentration as producing minimal, if any, central nervous system effects for exposures of approximately five minutes' duration.

Fire extinguishers of various types (Halon, dry chemical, and CO_2) are installed in the Control Room complex. All of the fire extinguishers are Underwriters Laboratories listed and/or Factory Mutual approved.

If all of the Halon fire extinguishers were discharged in the Control Room, the total amount of Halon released would be less than the total amount of Halon that would be released by the Computer Room Halon system. The release of the Computer Room Halon system will not adversely affect Control Room habitability. Therefore, the release of the lesser amount of Halon contained within the fire extinguishers would also not affect the Control Room complex habitability.

The operation of the dry chemical and/or CO_2 fire extinguishers would not affect Control Room habitability due to low volume of gas released from the fire extinguishers as compared to the total volume of the complex.

Control Room self-contained breathing apparatus (SCBA) - The release of the contents of any or all of the SCBA air packs or spare bottles into the Control Room atmosphere would not pose a detriment to Control Room habitability.

Instrument air operated components in the Control Room, primarily air operated dampers, have a normal air consumption rate. This air is released into the Control Room area. A review of these components has determined that the amount of air released is approximately 1 CFM. This is a contributor to the unfiltered inleakage assumed in Control Room dose analysis, [See Appendix 15C.]

The makeup air and exhaust air systems will serve to dilute any gaseous concentration of refrigerants or Halon below the already safe levels.

6.4.2.5 Shielding Design

The design basis loss-of-coolant accident (LOCA) establishes the shielding requirements for the Control Building. The control room shielding design is discussed in Subsection 12.3.2, and is evaluated from design bases LOCA source terms and doses which are presented in Subsection 15.6.5.4.

The external walls and roof of the control room are 2-foot thick reinforced concrete. These shield thicknesses in conjunction with the habitability systems will limit the integrated dose to the operators to less than 5 rem TEDE, in conformance with General Design Criterion 19 of Appendix A of 10 CFR, Part 50.

6.4.3 System Operational Procedures

6.4.3.1 Normal Mode

a. Normal Makeup Air Subsystem

During normal plant operation, the control room normal makeup air subsystem is aligned to deliver approximately 1000 cfm of outside air from both remote intakes (500 cfm per intake). With one normal makeup air fan operating and its associated discharge damper open, the intake isolation valves are positioned to allow equal amounts of air to be drawn from the east and west intakes. The normal makeup air flows through the prefilter and heater for each emergency filter unit and discharges through an orifice into the HVAC equipment room. The heater for each unit operates continuously to limit humidity to less than or equal to 70 percent. The prefilters are periodically replaced when particulate buildup causes the differential pressure across the filters to increase to a predetermined value.

In the event normal makeup air fails or is isolated for reasons other than those delineated in Subsections 6.4.3.2 and 6.4.3.3, appropriate operator action will be taken to re-establish makeup air. If makeup air is lost because of fan failure, the redundant normal makeup air fan and its discharge damper will be manually actuated. If makeup air is lost because of a vital bus outage or failure, or a loss of instrument air supply to the dampers, the emergency makeup air and filtration subsystem will be manually actuated.

b. Emergency Makeup Air and Filtration Subsystem

During normal plant operation, the emergency makeup air and filtration subsystem fans are idle and their associated discharge dampers are closed. Normal makeup air flows through each filter unit's prefilter and heater as discussed above. In the event this subsystem must be manually actuated during normal operation, it functions similarly to emergency mode operation.

c. Exhaust and Static Pressure Control Subsystem

During normal plant operation, the control room exhaust fan is operating and its discharge control damper modulates to maintain the control room complex at a pressure of at least (+) ⅛" w.g. with respect to the outside and adjacent areas. The redundant exhaust isolation damper remains fully open.

d. Cooling/Recirculation Subsystem

The non-safety related control room air conditioning subsystem will normally operate. However the, the safety related Trains may be placed in operation during normal plant operation. In the event of a malfunction in the non-safety related subsystem, or during a loss of offsite power, one of two 100% capacity safety-related trains of control room air conditioning will be placed in service manually. Following a loss of off-site power with the non-safety related subsystem de-energized, one of the two redundant safety related Trains will automatically start via the emergency diesel generator load sequence. Subsection 9.4.1 provides a more detailed description of this subsystem and its operation.

The unit heaters are not required to maintain the operation of the control room. Redundant unit heaters are not provided. If the unit heaters should fail during operation of the control room in the wintertime, the space temperature may drop below the normal comfort temperature. However, heat loads generated internally by electrical equipment would preclude excessively low temperatures.

6.4.3.2 Emergency Mode

a. Normal Makeup Air Subsystem

Following an accident, when high radiation is detected in either remote air intake or when the emergency makeup air and filtration subsystem fans are actuated, the normal makeup air fans automatically trip off and their associated discharge dampers automatically close. The control systems for these fans and dampers are "cross-trained," that is, the discharge damper associated with the Train A fan is controlled by the Train B control loop and vice versa. This configuration ensures isolation of the normal makeup air subsystem by fan trip and/or damper closure regardless of any single active failure.

Detection of smoke in either remote intake is alarmed only. Operator action is required to initiate the filter recirc. mode. Operations may, at their discretion, manually isolate the smoke-contaminated intake and re-establish makeup air from the unaffected intake to the control room complex via the emergency makeup air and filtration subsystem (see Subsection 6.4.3.3).

b. Emergency Makeup Air and Filtration Subsystem

Following an accident, when high radiation is detected at either remote intake or upon generation of an 'S' signal, both redundant emergency makeup air fans and their associated discharge damper are automatically actuated. Although the redundant filter system fans are designed to operate coincidentally and stabley in their parallel configuration, Operations may, at their discretion, shut down one of the systems during the course of the accident. Each filter system may also be initiated manually from the control room at anytime. The subsystem may be initiated manually upon detection of smoke in either remote intake (see Subsection 6.4.3.2).

Each emergency makeup air and filtration subsystem has a nominal capacity of 1100 cfm. This capacity is comprised of 600 cfm makeup air and 500 cfm recirculation air. These system flow rates have been calculated assuming both remote intake isolation valves are open to a throttle position allowing for 300 cfm makeup air from each intake. Following an accident, a contaminated remote intake does not have to be manually isolated. Design base analyses indicate that the makeup air dilution factor (i.e., 50 percent makeup air from “clean” intake, 50 percent makeup air from contaminated intake) and the radioactive particulate and iodine removal capacity of the filters together are adequate to maintain control room doses below allowable limits for the 30-day accident mitigation period.

c. Exhaust and Static Pressure Control Subsystem

Detection of high radiation in either remote makeup air intake or operation of either emergency makeup air and filtration subsystem fan will automatically isolate the exhaust and static pressure control subsystem. Under emergency conditions, the exhaust subsystem remains isolated at all times.

6.4.3.3 Smoke Removal Mode

The control room ventilation intake is provided with smoke detection capability to automatically alarm. Upon receipt of a smoke alarm from either remote intake, the operator will manually initiate the filter recirc. mode. The control room filter recirc. mode signal (CRFRM) will activate the emergency makeup air and filtration subsystem and isolate the normal control room makeup air and the exhaust and static pressure control subsystem. The HEPA filters associated with this system will remove smoke from the incoming air. Manual isolation of the smoke-laden intake can be accomplished by closing the appropriate 1-CBA-V9 or 2-CBA-V9 valve, locally. Additional venting of the control room could be accomplished by opening the doors and using portable exhausters.

6.4.3.4 Isolation Mode

The system operational procedure will be the same as in emergency mode, discussed in Subsection 6.4.3.2.

6.4.4 Design Evaluations

6.4.4.1 Radiological Protection

Radiological protection for the control room operators during accident conditions is provided by the control room shield walls and habitability system. An evaluation of the protection offered by the shielding and habitability systems is presented in Chapter 15 (see Subsection 15.6.5.4, Radiological Consequences of a LOCA).

6.4.4.2 Toxic Gas Protection

As stated in Subsection 2.2.3.1, no significant quantity of toxic gases is stored at any industrial facility in the vicinity of the site. No toxic gases are transported by the Boston and Maine Railroad. The distance to the nearest highway is one mile, so it is unlikely that any toxic chemical spill along a road will endanger control room habitability and, in addition, the control room design and operator training offer inherent protection against the consequences of a spill in the site vicinity.

An evaluation of chemical hazards identified six chemicals onsite that had the potential to provide a hazard to control room habitability. The six chemicals are propane, hydrogen (trailers), sodium hypochlorite (NaOCl), carbon dioxide (refrigerated liquid), nitrogen (gas) and sulfur hexafluoride (SF6). These chemicals were evaluated and it was determined that none of the chemicals would affect maintaining the control room habitable if released under the postulated accident scenarios (Reference 4). This evaluation also addressed potential off-site chemical hazards. No off-site chemical hazards were identified that would affect control room habitability. As part of the Control Room Envelope Habitability Program, an updated list of potential chemical hazards both on and off-site is available.

Toxic gas protection for control room operators in not required since no potential chemical hazards have been identified either on or off-site that could potentially create a hazardous chemical environment in the control room.

6.4.5 Testing and Inspection

During preoperational system testing, air systems are balanced to achieve design flow rates. In addition, operability of all equipment and control functions are verified. Periodic verification of equipment operability and certain system parameters will be performed in accordance with plant Technical Specifications.

Preoperational testing of the emergency filter units and their associated components will be performed in accordance with ANSI-N510 (1980). Subsequent periodic testing of the filter units will be performed in accordance with Technical Specifications which invoke certain ANSI-N510 (1980) in-place testing requirements and acceptance criteria.

Air system pressure boundaries are leak tested following installation.

A Control Room Envelope Habitability Program has been implemented. Four (4) types of tests are required to ensure Seabrook's Control Room is maintained habitable: an integrated tracer gas test, an administrative evaluation, a Control Room Envelope pressure test and equipment TS surveillances.

6.4.6 Instrumentation Requirements

6.4.6.1 Normal Makeup Air Subsystem

The controls for the normal makeup air fans and discharge dampers are located on the main control board (MCB). During normal operations, one of the two normal makeup air fans is running and its associated discharge damper is open.

Isolation of the normal makeup air subsystem is automatically initiated upon detection of high radiation in either remote air intake or upon actuation of the emergency makeup air fans.

Each remote air intake is provided with fully redundant radiation monitoring systems. The east intake radiation monitors are located at the intake. The west intake radiation monitors are located on the intake piping in the Diesel Generator Building. Details of the RDMS system are provided in Subsection 12.3.4.

The control scheme of the normal makeup air fans and dampers is "cross-trained" to ensure automatic isolation regardless of any single active failure, that is, detection of high radiation in either intake by Train A monitor or actuation of the Train A emergency makeup air fan will trip the Train A normal makeup air fan and close the discharge damper downstream of the Train B normal makeup air fan. Detection of high radiation in either intake by either Train B monitor or actuation of the Train B emergency makeup air fan will trip the Train B normal makeup air fan and close the discharge damper downstream of the Train A normal makeup air fan. This "cross-trained" design also ensures that the normal makeup air subsystem automatically isolates on an outage or failure of either vital electrical bus.

Status lights are provided on the MCB for the normal makeup air fans and discharge dampers. Position indication is provided for the remote intake manual isolation valves.

The following alarms are provided at the MCB:

- Control room normal makeup air isolation
- Loss of control room makeup air
- East air intake contaminated - smoke, radiation

- West air intake contaminated - smoke, radiation.

6.4.6.2 Emergency Makeup Air and Filtration Subsystem

The controls for the emergency makeup air fans and dampers are located on the MCB. The fans and dampers are automatically actuated upon detection of high radiation in either remote air intake or upon generation of an 'S' signal. The fans and dampers may also be manually actuated from the MCB.

The filter unit heaters operate continuously.

Status lights for the emergency makeup air fans and discharge dampers are provided on the MCB. Grouped status lights are also provided for the fans.

Differential pressure across each filter component is indicated locally in the control room HVAC equipment room. The temperature for each filter unit is indicated locally. Relative humidity, differential pressure and air flow for each filter unit are indicated and recorded on the station computer.

The following alarms are provided at the MCB:

- High filter unit differential pressure
- High filter temperature
- High filter relative humidity
- High filter carbon monoxide levels (early fire detection)
- High and low filter flow
- Filter isolation damper closed.

6.4.6.3 Exhaust and Static Pressure Control Subsystem

The exhaust and static pressure control subsystem fan and discharge control damper are controlled from the MCB. During normal operations, the fan is running and the control/isolation damper modulates to maintain a positive control room pressure. This modulating feature is controlled by a differential pressure control loop. This control system senses pressure in the Control Room HVAC Equipment Room, Cable Spreading Room and the outside atmosphere. The damper is modulated automatically to maintain the HVAC Room at greater than or equal to ⅛" w.g. positive pressure with respect to atmosphere and the Cable Spreading Room. The redundant exhaust isolation damper (CBA-DP-1058) is fully open during normal plant conditions. Loss of normal makeup air and/or loss of control room pressurization will close CBA-DP-28 and trip CBA-FN-15. Interlocks are provided so that isolation dampers CBA-DP-28, -1058 and exhaust fan CBA-FN-15 are isolated whenever a high radiation signal is present or fans 16A or 16B are running.

Status indication for CBA-FN-15, CBA-DP-28, and CBA-DP-1058 is provided on the MCB. Indication of differential pressure between the control room HVAC room and outside atmosphere is provided in the HVAC room. This differential pressure, as well as the differential pressure between the Cable Spreading Room and the HVAC room, is recorded on the station computer.

The following alarms are provided at the MCB:

- Low control room/outside atmosphere differential pressure
- Low control room/cable spreading room differential pressure
- CBA-FN-15 tripped.

6.4.6.4 Cooling/Recirculation Subsystem

All principal components of the safety related chilled water system (namely water chillers, chilled water pumps and air conditioning unit fans and dampers), except the chiller condenser exhaust fans are controlled from the MCB. The chiller condenser exhaust fans are controled from the control room air conditioning panel located in the control room air conditioning equipment room on elevation 75' within the control room pressure envelope. Additional instrumentation and control features are discussed in Subsection 9.4.1.

The following alarms are provided at the MCB:

- Control room high and low temperature
- Computer room high and low temperature.
- Safety related chiller trouble
- Condenser exhaust fan trip
- Condenser exhaust fan bypassed

6.4.7 References

1. N. Irving Sax, "Dangerous Properties of Industrial Chemicals," 5th Edition, Van Nostrand Reinhold, 1979.
2. "Handbook of Compressed Gases," Compressed Gas Association, Inc., Van Nostrand Reinhold, 1966.
3. "Hydrogen Chloride," Safety Data Sheet SD-39, Manufacturing Chemists Association, Washington, D.C., Quoted in Reference 2; also extracts supplied by personal communication with Miss Mott of AICE.
4. "Evaluation of On-Site and Off-Site Toxic Chemicals - Control Room Habitability 2008 Update (SBC-1069)," Document No. 32-9098365-000 December 18, 2008. Areva NP Inc.

6.5 FISSION PRODUCT REMOVAL AND CONTROL SYSTEMS

6.5.1 Engineered Safety Feature (ESF) Filter Systems

The following engineered safety feature filter systems are atmospheric cleanup systems provided to remove fission products and to retain the radioactive material following a design basis accident.

a. Containment Enclosure Emergency Air Cleaning System

b. Fuel Storage Building Emergency Air Cleaning System

c. Control room emergency makeup air and filtration subsystem.

These systems are secondary systems, as defined in NRC Regulatory Guide 1.52.

The following non-engineered safety-feature filter systems are described in other sections of the UFSAR:

a. Primary Auxiliary Building Air Cleaning System (Subsection 9.4.3)

b. Waste Processing Building Air Cleaning System (Subsection 9.4.4)

c. Containment Structure Recirculating Air Cleaning System (Subsection 9.4.5)

d. Containment Structure Purge Air Cleaning System (Subsection 9.4.5)

The fans, ducting and dampers of the containment structure recirculating air cleaning system perform a post-accident H_2 mixing function (see Subsection 6.2.5).

6.5.1.1 Design Bases

a. Containment Enclosure Emergency Air Cleaning System (CEEACS)

The Containment Enclosure Emergency Air Cleaning System is designed to maintain a negative pressure within the containment enclosure following an accident, to remove and retain airborne particulates and radioactive iodine, and to exhaust filtered air to the unit plant vent.

1. The CEEACS is designed to maintain a negative pressure of greater than or equal to 0.25 inches of water, following a design basis accident, in the annular region defined by the containment structure and the containment enclosure, as well as in the additional building volumes associated with the electrical penetration areas, mechanical piping penetration area and engineered safeguard equipment cubicles, so that any fission products leaking from these systems and from the primary containment will be retained in these areas and eventually processed through the filters. In order to ensure a negative pressure of greater than or equal to 0.25 inches of water is maintained at the top of the containment enclosure for the entire range of design outside ambient temperatures, a negative pressure greater than or equal to 0.685 inches of water has to be maintained at the 21' -0" elevation of the containment enclosure. The filter unit also accepts the discharge from the post-LOCA containment hydrogen purging duct, as discussed in Subsection 6.2.5.2.

2. The exhaust capacity is based on a conservative leak rate of 0.20 percent/day of the containment air mass at maximum internal pressure following a design basis LOCA as given in Table 6.5-7. Each containment enclosure exhaust fan is designed to exhaust at the rate of 2100 SCFM, which is equivalent to a volumetric inleakage rate of 325 percent/day from the containment structure to the containment enclosure annulus.

3. Sizing of the high efficiency particulate air filters (HEPA) and carbon adsorbers is based on the volumetric flow rate required to maintain the negative pressure in the containment enclosure annulus and connected penetration and engineered safeguard areas, and for fission product removal capability employing the conservative inventories given in Subsection 15.6.5.

4. The Containment Enclosure Emergency Air Cleaning System is a seismic Category I, Safety Class 2, system.

b. <u>Fuel Storage Building Emergency Air Cleaning System</u>

1. The Fuel Storage Building Emergency Air Cleaning System is designed to maintain a negative pressure of 0.25 inches of water within the Fuel Storage Building while in the irradiated fuel handling mode, to remove and retain airborne particulates and radioactive iodine, and to exhaust filtered air to the unit plant vent following a fuel handling accident.

2. The Exhaust Filter System is designed to remove and retain airborne particulate and radioactive iodine, and to exhaust the filtered air to the unit plant vent following a fuel-handling accident while either or both filters are operating.

3. Sizing of the HEPA filter and carbon adsorbers is based on the volumetric flow rates required to maintain the required negative pressure in the Fuel Storage Building for both the normal fuel handling mode and the fuel handling accident mode, and for fission product removal capability employing the conservative inventories presented in Subsection 15.6.5.

4. The Fuel Storage Building Emergency Air Cleaning System is a seismic Category I, Safety Class 3 system.

c. Control Room Emergency Makeup Air and Filtration Subsystem

The control room emergency makeup air and filtration subsystem is designed to supply makeup air from two remotely located intakes to the control room complex following an accident and/or a release of radiological contaminants or smoke, to maintain a positive pressure within the control room complex, and to remove and retain airborne particulates and radioactive iodines from all makeup air and a portion of recirculated air.

1. The control room emergency makeup air and filtration subsystem is designed to maintain a positive pressure of greater than or equal to 0.125 inches of water in the control room complex relative to the outdoors and to the cable spreading room. The system will operate following a design basis accident or other abnormal operating scenarios such as smoke contamination of a remote air intake (see Section 6.4 for additional details). The control room complex occupies the entire 75'-0" elevation of the Control Building and includes the main control room area, computer room, technical support center, offices, conference room and library, emergency storage room, HVAC equipment room, kitchen and sanitary facilities, as shown in Figure 1.2-32. The positive pressure will preclude infiltration of radiological and other hazardous contaminants to maintain habitability of the complex for a safe plant operation and shutdown, as necessary.

2. The makeup air portion of the nominal filter capacity (600 cfm) is conservatively greater than the minimum required ventilation rate for occupancy/breathing purposes (175 cfm) and the calculated complex outleakage at +0.125" W.G. (165 cfm). The recirculation air portion of the nominal filter capacity (500 cfm) is based on a desired filter system decontamination factor (see Subsection 15.6.5).

3. Sizing of the high efficiency particulate air (HEPA) filters and carbon adsorbers is based on the volumetric flow rate required to maintain the positive pressure within the control room complex, to satisfy ventilation requirements for occupancy/breathing purposes, and for fission-product removal capability employing the conservative inventories given in Subsection 15.6.5.

4. The control room emergency makeup air and filtration subsystem is a seismic Category I, Safety Class 3 system, except for some instrumentation which does not provide vital control or monitoring.

6.5.1.2 System Design

a. Containment Enclosure Emergency Air Cleaning System

The filter system consists of redundant filter trains, fans, dampers and controls and a common ductwork system. The air flow required to maintain a negative pressure in the Containment Enclosure Building is passed through demisters, which also function as prefilters, and through HEPA filters located both upstream and downstream of the carbon filter prior to exhausting through the plant vent (see Figure 9.4-7 for an air flow diagram).

A ductwork cross-connection is provided between the two filter trains at a point between the downstream HEPA filter and the fan inlet. Should the operating fan fail, this cross-connection will insure a continued air flow by manual startup of the redundant fan.

Each redundant filter train is complete, separate and independent from both electrical and control standpoints. Each filter train fan is supplied power from an independent ESF power train source, which will furnish power to its fan during abnormal and post-accident conditions. The operation of mechanical equipment is controlled and monitored in the plant unit control room, as discussed in Section 7.3.

The HEPA filters have a certified test efficiency of 99.97 percent based on DOP smoke test. For impregnated carbon filter efficiencies see Table 6.5-4. The evaluation of offsite effects due to potential accidents has been made in accordance with Appendix 15B, assuming minimum carbon filter efficiencies of 85 percent for organic iodines and 95 percent for elemental iodines for the conservative case. The carbon filters use a deep bed design which provides a gas residence time of approximately 0.5 second.

b. Fuel Storage Building Emergency Air Cleaning System

Separate redundant carbon filter exhaust systems are provided for filtering the building air prior to its exhaust to the unit plant vent. One carbon filter train will be operated whenever irradiated fuel not in a cask is being handled. The filter unit, together with dampers and controls, will maintain the Fuel Storage Building at a negative pressure with respect to atmosphere so that any airborne particulate or radioactive iodine will be retained in the building and eventually processed through the filters (see Figure 9.4-4 for an air flow diagram).

The Filter Cleanup System consists of redundant filter trains, redundant fans, ductwork, dampers and controls. Each filter train consists of demisters, which also function as prefilters, heaters, medium efficiency filter, HEPA filters both upstream and downstream of the guard bed and carbon filters.

A ductwork cross-connection is provided to connect the two filter train systems at a point between the downstream HEPA filter and the fan inlet. Should the operating fan fail, this cross-connection will ensure continued air flow through a partially loaded or fully loaded filter by manual startup of the redundant fan. The cross-connection is sized so the temperature of a fully loaded filter bed will not rise above 200°F (see Subsection 6.5.1.3c).

Each redundant filter train is complete, separate and independent, from both electrical and control standpoints. Each filter train is supplied power to its fan during abnormal and post-accident conditions. The operation of mechanical equipment is controlled and monitored in the plant unit control room, as discussed in Section 7.3.

The HEPA filter manufacturer's minimum test efficiency of 99.97 percent is based on the DOP smoke tests. The impregnated carbon filters have a manufacturer's rated minimum test efficiency of 97 percent for methyl iodide (CH_3I-131) and 99.9 percent for elemental iodine as delineated in Table 6.5-5. The carbon filter has a deep bed design having a gas residence time of 0.5 seconds.

Prior to the start of handling of irradiated fuel not in a cask, one exhaust filter system is placed in operation, the normal exhaust system is shutdown, and the normal exhaust damper is closed. Therefore, the system will be in operation should a fuel handling accident occur.

c. Control Room Emergency Makeup Air and Filtration Subsystem

The filter system consists of redundant filter trains, fans, dampers, and controls. The redundant filter trains share a common suction makeup air piping system. The makeup air pipe penetrates the floor of a plenum integral to the Train A filter unit and upstream of the internal filter components. This plenum is connected to a systematically similar suction plenum integral to the Train B filter unit via ductwork. Both filter units and the connecting ductwork are located entirely within the control room complex. Only the makeup air pipe penetrates and enters the complex envelope.

Each filter train consists of an isolation damper, a medium efficiency prefilter, an electric air heater, an upstream HEPA filter bank, a carbon adsorber section, a downstream HEPA filter bank, a backdraft damper, a fan, and a discharge control damper. Each filter train is also designed with an orifice plate downstream of the air heater and upstream of the first HEPA filter bank for bypass/recirculation air flow. During normal operations, when the filter system is idle, makeup air passes into the suction plenum of each filter, flows through the prefilter and heater, and discharges into the control room HVAC equipment room via the orifice. Under emergency conditions when the filter system is operating, makeup air is drawn into each filter suction plenum, through the prefilter and heater, and then mixes with a portion of the recirculation air which enters via the orifice plate. This air mixture then flows through the HEPA-carbon-HEPA configuration, and is discharged into the HVAC equipment room via the filter train's associated fan and dampers. The electric heater for each filter operates continuously to ensure that the relative humidity within the carbon adsorber banks is equal to or less than 70 percent at all times.

A pipe with a manual isolation valve is provided to cross-connect the two filter units at a point downstream of the carbon adsorber sections. The isolation valve is normally open / throttled to a preset position. During single train operation, this alignment will provide a small amount of air flow through the carbon adsorber section of the inoperable train. This air flow will remove decay heat satisfying fire protection concerns. The isolation valve will be closed for train isolation in the event a fire is detected in one of the units.

Each redundant filter train for both electrical and control requirements is complete, separate, and independent. Each filter train fan, air heater, and essential instrumentation and control components are powered from an independent ESF power train source, which will furnish power to the essential components during abnormal and accident conditions. Operation of the various system components is controlled and monitored in the plant unit control room, as discussed in Subsection 6.5.1.5c and Section 7.3.

The HEPA filters have a certified test efficiency of 99.97 percent based on DOP smoke test. The carbon adsorber efficiencies are provided in Table 6.5-6. Filter efficiencies utilized to evaluate post-accident control room doses are provided in Appendix 15B. The conservative analysis assumes minimum filter efficiencies of 95 percent for organic and elemental iodines and 99 percent for particulate iodines. The carbon adsorber design provides an average gas residence time of 0.25 seconds.

6.5.1.3 Design Evaluation

a. Containment Enclosure Emergency Air Cleaning System (CEEACS)

The containment enclosure exhaust filter trains are redundant, to insure the maintenance of a negative pressure in the containment enclosure and related areas and to insure cleanup of the exhaust air following an accident. All safety-related equipment and ductwork supports have been designed and seismically analyzed to withstand and function through a Safe Shutdown Earthquake (SSE). The system is designed to limit offsite post-accident doses to values below those specified in 10 CFR 100 (see Subsection 15.6.5 for evaluation of system performance). A single component failure will not result in loss of function of this ESF system.

In the unlikely event that an accident requiring filter operation occurs, both of the redundant filter train fans will be automatically started on the "T" signal (see Drawing NHY-503515) to provide an air flow velocity of approximately 45 fpm through their associated carbon filter beds. In the further unlikely event of failure of one operating fan, the ductwork cross-connection will provide redundant air flow from the redundant fan across the partially loaded or fully loaded filter bed.

See Section 6.2.3.3.a for a description of the analyses performed to demonstrate the capability of the system to draw down the Containment Enclosure Building to the design negative pressure within the design basis draw down time.

HEPA filters and carbon adsorbers were tested at the expected accident environmental conditions for this secondary system. Results indicated no degradation of filtering efficiency. Subsection 15.6.5 analysis conservatively assumes lower efficiencies.

The systems are designed to meet the intent of Regulatory Guides 1.4 and 1.52. See Table 6.5-1 for a discussion relative to conformance with Regulatory Guide 1.52, Rev. 2.

b. Fuel Storage Building Emergency Air Cleaning System (FSBEACS)

The fuel storage building exhaust filter trains are redundant to insure cleanup capability and the ability to maintain a negative pressure following a fuel handling accident. All safety-related air handling equipment, equipment support and ductwork supports are designed to operate during and following an SSE. The system is designed to limit offsite post-accident doses to values not exceeding the requirements of 10 CFR 100 (see Chapter 15). Loss of one emergency exhaust filter train will not prevent the safety function from being performed. During fuel handling, only one set of filters and fan will normally be operating. In the unlikely event of an accident, the second set of filters and fan can be manually started to provide redundancy. The operating filter will provide an air flow velocity of approximately 40 fpm through its associated carbon filter bed. In the further unlikely event of failure of the operating fan, the ductwork cross-connection will provide redundant air flow across the partially loaded or fully loaded filter bed. [Note]

HEPA filters and carbon adsorbers have been tested at the expected accident environmental conditions for this secondary system. Results indicated no degradation of filtering efficiency; however, conservative parameters based on Regulatory Guide 1.25 were used in the conservative analysis in Subsection 15.7.4.

The systems are designed to meet the intent of Regulatory Guides 1.25 and 1.52. See Table 6.5-2 for a discussion of conformance with Regulatory Guide 1.52, Rev. 2.

c. Control Room Emergency Makeup Air and Filtration Subsystem

The control room emergency filter trains are fully redundant to ensure the maintenance of a positive pressure within the control room complex, the provision of adequate supply makeup air for breathing/occupancy purposes, and the filtration of this makeup air and a percentage of recirculation air following an accident or smoke contamination of an intake given any single active failure. All safety-related passive and active components have been designed and supported to withstand and function during and following a Safe Shutdown Earthquake (SSE).

The system is designed to limit post-accident control room doses to values below those specified in 10 CFR 50, Appendix A, GDC 19 and Section 6.4 of the Standard Review Plan (see Subsection 15.6.5 for accident dose analyses).

Note All drawings referenced in this section were provided under a separate submittal to the NRC (see Section 1.7).

In the unlikely event that an accident requiring filter system operation occurs, both of the redundant filter train fans and discharge control dampers will be automatically actuated upon generation of an "S" signal or detection of high radiation in either remote air intake (see Subsection 6.5.1.5c).

The following analysis has been performed to demonstrate the capability of the system to maintain the control room complex at a positive pressure of 0.125 inches of water gauge:

1. Air Out-Leakage Analysis

   A calculation was performed to determine the control room complex envelope air out-leakage through various air flow paths such as electrical penetrations, concrete structure, construction joints, doors, and the worst-case exhaust isolation damper. The analysis was developed utilizing vendor information, ASHRAE data and methodology, and analytical and experimental leakage data provided in "Conventional Buildings for Reactor Containment-NAA-SR-10100(1965)," issued by Atomics International, a division of North American Aviation Incorporated.

   The calculated maximum out-leakage is approximately 165 cfm at a control room complex positive pressure of 0.125" W.G. The nominal makeup air capacity of the emergency makeup air and filtration subsystem is 600 cfm.

   The Control Room Emergency Air and Makeup Filtration System is controlled by the Control Room Envelope (CRE) Integrity Program. This program ensures the control room and its Operators are in a condition to assure public safety during all modes of operation. It provides measures to allow the control room habitability systems (CRHS) to maintain a habitable environment for operators under normal and abnormal conditions, and identifies compensatory measures if habitability is in question.

d. Analysis of Heat Generation in Charcoal Beds

A detailed analysis was performed to determine the highest attainable temperatures which could be reached by the charcoal beds in the Containment Enclosure System, Fuel Storage Building Filter System, and control room emergency makeup air subsystem due to decay heat from accumulated fission products resulting from a design basis accident. The filter loadings and other parameters used in the analysis for each filter system, as well as the results, are given below.

1. Pertinent Parameters for Analysis

Item	CEEACS	FSBEACS	CREMAFS
Initial Filter Temperature	100°F	100°F	105°F
Thermal Conductivity	0.55 Btu/ hr ft °F	0.55 Btu/ hr ft °F	0.55 Btu/ hr ft °F
Specific Heat	0.242 Btu/lb °F	0.242 Btu/ lb °F	0.242 Btu/ lb °F
Energy Absorption Coefficient	3.05/ft	-	3.05/ft
Charcoal Density	0.38 gm/cc	0.38 gm/cc	0.38 gm/cc
Element Length	61 inches	61 inches	*30 inches/ 21 inches
Width	66 inches	120 inches	*24 inches/ 38 inches
Thickness	4 inches	2 inches	* 2 inches/ 4 inches
Number of Filter Elements	4	7	* 6/4

*1-CBA-F-38/1-CBA-F-8038

2. Filter Loading

Isotope	CEEACS	FSBEACS	CREMAFS
I-131	$3.3x10^{3}$	$6.3x10^{2}$	$1.89x10^{-1}$
I-132	$4.1x10^{0}$	nil	$2.04x10^{-1}$
I-133	$3.4x10^{3}$	$6.8x10^{1}$	$3.66x10^{-1}$
I-135	$6.0x10^{2}$	$5.0x10^{-2}$	$3.16x10^{-1}$

3. Results

This analysis indicates that desorption temperatures will not be reached for the Containment Enclosure Emergency Air Cleaning System, the control room emergency makeup air subsystem and the fuel storage building emergency air cleaning system charcoal filter beds, even for the case of no air flow due to fan failure and unavailability of air flow via the ductwork cross-connections between the two redundant filter trains of each system.

6.5.1.4 Tests and Inspections

a. Containment Enclosure Emergency Air Cleaning System

Fan discharge ductwork was leak-tested during installation. Air system balancing and adjustment to design air flow was completed prior to system preoperational testing.

The entire system underwent preoperational testing as described in Subsection 14.2.11.

Periodic testing will verify the ability of the system to maintain the containment annulus at the required negative pressure. Periodic filter testing will be performed to meet the intent of Regulatory Guide 1.52, as clarified in Table 6.5-1.

b. Fuel Storage Building Emergency Air Cleaning System

Fan discharge ductwork was leak-tested during installation. Air system balancing and adjustment to design air flow was completed during plant preoperational testing.

The installed systems underwent preoperational testing, as described in Subsection 14.2.11, prior to storage of fuel in the Fuel Storage Building.

Prior to refueling operations, the ability of each fan to maintain a fuel storage building negative pressure greater than or equal to 0.25" H_2O will be verified. Periodic filter testing will be performed to meet the intent of Regulatory Guide 1.52, as clarified in Table 6.5-2.

c. Control Room Emergency Makeup Air and Filtration Subsystems

Fan discharge ductwork was leak-tested during installation. Local leak testing is performed at potential leak paths on the makeup air piping (e.g., damper frame seals, cover plate gaskets, bolted flange seals, etc.). Air system balancing and adjustment to design air flow was completed prior to system preoperational testing.

Acceptance and periodic filter testing will be performed in accordance with Regulatory Guide 1.52 except that the 1980 issues of ANSI N509 and ANSI N510 will be utilized (see Table 6.5-3).

Testing will be done following the Control Room Envelope Habitability Program. Four (4) types of tests are required to ensure Seabrook's Control Room is maintained habitable: an Integrated Tracer Gas Test (performed every six years), an Administrative Evaluation (performed every 18 months), a Control Room Envelope Pressure Test (performed every 18 months), and equipment TS surveillances (performed as specified by Technical Specifications).

6.5.1.5 Instrumentation Requirements

a. Containment Enclosure Emergency Air Cleaning System

This post-accident cleanup system is designed to function automatically upon receipt of an engineered safety feature actuation "T" signal (containment isolation phase - A). Manual controls for the fans and dampers are also provided at the MCB (see Drawing NHY-503515). The containment enclosure (CE) pressure differential deviation is alarmed at the MCB. The discharge flow of the system is indicated locally, as well as recorded at the MCB. High and low flow alarms are also provided at the MCB. A high pressure drop condition across each filter train is recorded and alarmed at the MCB. In addition, the pressure differential of each filter component is indicated locally. Carbon adsorber discharge air high temperature and inlet air high humidity are alarmed at the MCB. Air temperature upstream of carbon adsorber and downstream of second HEPA filter is indicated locally.

b. Fuel Storage Building Emergency Air Cleaning System

The operation of the Fuel Storage Building (FSB) Emergency Air Cleaning System is controlled and monitored in the plant control room (see Drawing NHY-503543). FSB supply air is controlled through DP 13A/B (see Drawing NHY-503541). During fuel handling operations, the FSB is maintained at a slightly negative pressure with respect to the atmosphere through the FSB exhaust system (see Drawing NHY-503542). FSB high and low differential pressure is alarmed at the MCB. Also, the FSB temperature and relative humidity are monitored, and high deviations are alarmed at the MCB. Each filter train is monitored for differential pressure and high deviations are alarmed at the MCB. Each cleaning unit is provided with a temperature switch which alarms high temperature on the MCB. Temperature switches for automatic control of cleaning unit heaters are also provided. Independent low-flow instrumentation is provided to alarm at MCB the discharge air flow through each of the redundant air cleanup filter units (see Drawing NHY-506452). In addition, the differential pressure across each individual filter unit is indicated locally. Local temperature indicators are also provided both upstream and downstream of the carbon filters.

c. Control Room Emergency Makeup Air and Filtration Subsystem

The emergency makeup air and filtration subsystem fans and discharge dampers are also controlled from the MCB. In the auto mode, CBA-DP-27A and 27B will open upon receipt of a remote intake high radiation signal or a safety injection ("S") signal. Opening of these dampers will automatically start associated fans CBA-FN-16A and 16B. A high radiation signal or starting fans 16A and 16B will trip CBA-FN-27A, 27B, and 15 and isolate dampers CBA-DP-53A, 53B, 28 and 1058. Each filter air heater operates continuously. High and high-high temperature controls are provided. The high-high temperature control requires local/manual reset. Status lights are provided at the MCB for the fans and discharge dampers. Status lamps are also provided for the fans in the Accident Monitoring Instrumentation arrays.

Differential pressure indication across each filter component is provided locally. High differential pressure across each filter unit generates a VAS alarm at the MCB. The temperature for each filter unit is indicated locally. High temperature generates a VAS alarm. Relative humidity for each filter unit is recorded on the station computer. High and low air flow generate VAS alarms. Two carbon monoxide detectors per filter (one each at the inlet and outlet of the carbon adsorber banks) provide for early fire detection. These devices monitor the filtration systems and generate an alarm in the control room.

6.5.1.6 Materials

Listed in Table 6.5-4, Table 6.5-5 and Table 6.5-6 by commercial name, quantity and chemical composition are the materials used in or on the filter systems. Extremes in temperature or radiation that could promote radiolytic or pyrolytic decomposition of materials are not applicable to the Containment Enclosure Building or the fuel storage for normal or postulated accident conditions.

6.5.2 Containment Spray System

This section presents a detailed description of the fission product removal function of the Containment Building Spray (CBS) System.

6.5.2.1 Design Bases

The spray system provides for iodine removal to limit the consequences of a LOCA to the limits of 10 CFR 100 by providing a rapid reduction in containment elemental iodine concentration following a LOCA. This greatly reduces the amount of iodine that can leak from the primary containment into the containment enclosure structure. The combination of iodine removal by the sprays and the containment enclosure exhaust filters limits the offsite radiological consequences resulting from the design basis accident. These consequences and the system performance are discussed in Subsection 15.6.5.

Table 15.6-17, prepared in accordance with Regulatory Guide 1.4, lists the fission products that the CBS system is designed to remove during a LOCA. A discussion of the extent to which credit is taken for fission product removal by the CBS system is included in Subsection 15.6.5.

The system uses the principles of hydrodynamic equilibrium to provide a reliable means for buffering the spray solution with an iodine removal agent. The spray rings are designed to provide a high degree of spray coverage to maximize the spray effectiveness for iodine removal.

6.5.2.2 System Design (for Fission Product Removal)

Iodine removal inside the containment following a LOCA is accomplished by 3010 gpm of spray (assuming only one train available) with a boric acid-sodium hydroxide spray solution. The design details of the spray system are presented in Subsection 6.2.2.

The spray system initially takes suction from the refueling water storage tank (RWST) and continues to add a fresh spray additive solution into the containment until the inventory of the RWST is depleted. Upon a low level in the RWST, the suctions of the spray pumps are automatically transferred to the containment sump. The time of transfer is a function of the number of emergency core cooling pumps and containment spray pumps in operation. At design flow rates and minimum pumps in operation (3575 gpm injection and 3010 gpm spray) the transfer to the recirculation mode takes place in 53.7 minutes, assuming a 10-second delay for injection and a 62 second delay in spray flow. With maximum safeguards in operation (6600 gpm injection and 6600 gpm spray), the transfer to the containment sump occurs at approximately 26 minutes, assuming a 10-second delay for injection and a 62 second delay in spray flow. The spray pumps remain in operation for as long as is necessary to control the containment pressure within the required limits. The maximum delay in delivery of the NaOH solution to the spray nozzles is 2.47 minutes.

The chemical additive for the spray is stored in the spray additive tank (SAT) located adjacent to the RWST. When a containment spray actuation signal occurs, two valves in parallel lines provide redundant flow paths for supplying the chemical additive to the RWST and spray pump suction. The chemical additive is stored as a 20 wt percent NaOH solution. The chemical spray additive flows by gravity into a mixing chamber in the RWST. The design is such that the pH of the solution leaving the mixing chamber is averaging between 9.0 and 9.6. The total amount of chemical supplied will result in a containment sump liquid having a pH range between 8.8 and 9.4 during the recirculation phase.

The spray is delivered to the containment through 198 SPRACO 1713A nozzles per flow train, each having a flow rate of 15.2 gpm at containment design pressure and 40 psi differential operating pressure. The nozzles produce a drop size spectrum with a conservatively estimated volumetric drop diameter of 1000 microns.

The nozzles are spaced to provide a uniform spray pattern across the containment cross section. The nozzles of the redundant spray trains are uniformly spaced between the nozzles of the other spray train, so that either subsystem will provide uniform coverage. The SPRACO 1713A nozzles have been used extensively in other nuclear plants and various iodine removal experiments.

The location of the spray nozzles in the dome of the containment is shown on Figure 6.2-76 and Figure 6.2-77. The flow weighted average fall height of the spray drops is a minimum of 134 ft. for headers 1 and 2. For headers 3 and 4, the average fall height is 144 ft. The operating floor is at an elevation of 25 ft.

The following is a tabulation of important spray iodine removal parameters:

Spray fall height	134 ft
Total containment free volume	2.715×10^6 ft^3
Sprayed containment free volume	2.310×10^6 ft^3
Containment pressure, design	52.0 psig
Containment temperature, design	296°F
Spray flow rate per train design/minimum	3010/2808 gpm
Spray solution pH, minimum	9.0
Average	9.0 to 9.6
Spray additive flow rate	
Maximum safety injection	240 gpm
Minimum safety injection	150 gpm

These parameters are chosen to minimize credit taken for iodine removal by the spray system and provide a conservative basis for calculating offsite doses.

Two headers are provided for each 3010 gpm train. Headers No. 1 and 3 are supplied by one of the CBS pumps while Headers No. 2 and 4 are supplied by the other pump.

Header No. 1 has 118 nozzles spaced approximately 3°apart. Fifty-nine of these nozzles are oriented vertically downward. The remaining 59 are oriented at 45° on the inside of the header pointing inward and downward.

Header No. 3, which is the companion header to header No. 1, has 80 nozzles spaced approximately 4° 30' apart. Forty of these nozzles are at a 45° angle pointing downward toward the containment wall, 16 are at a 45° angle pointing downward and inward, 20 nozzles point directly downward and 4 point horizontally toward the containment vertical centerline.

Header No. 2 contains 162 nozzles spaced approximately 2° 15' apart. Eighty are mounted at a 45° angle pointing downward toward the containment wall, 41 point directly downward and 41 are at a 45° angle pointing inward.

Header No. 4, which is the companion header to header No. 2, contains 36 nozzles spaced approximately 10° apart. Eighteen are mounted at a 45° angle pointing downward toward the containment wall. The remaining 18, point directly downward.

Figure 6.2-84, Figure 6.2-85 and Figure 6.2-86 show the spray drop distribution, accumulated number percentage, and accumulated volume percentage for the SPRACO No. 1713A nozzle. These distributions are the basis for evaluation of iodine removal effectiveness.

Approximately 85 percent of the containment net free volume is covered by spray. Figure 6.2-80, Figure 6.2-81, Figure 6.2-82, and Figure 6.2-83 show plan and elevation views of the expected spray patterns.

Table 6.2-80 lists the regions of sprayed volumes in the containment and the volume of each sprayed region. It can be seen from Figure 6.2-80 and Figure 6.2-81 that more than 95 percent of the cross section of the containment at the operating floor (elevation 25') is covered by spray.

6.5.2.3 Design Evaluation

The Containment Spray System has been evaluated by both conservative and realistic models. Subsection 15.6.5 presents the parameters used in both the conservative and realistic analyses and the results of these analyses.

The initial spray solution will be boric acid buffered with sodium hydroxide to a pH of approximately 9.0 to 9.6. Sump pH after recirculation commences will be above 8.5 to assure high iodine partition factors and prevent re-evolution of iodine from the spray solution.

Using the method described by Parsly (Reference 1) a fresh spray drop is calculated to be less than 10 percent saturated during its fall from the spray nozzles. The removal of iodine should therefore be controlled by gas phase resistance. Steam condensation and drop coalescence have been discussed by Pasedag and Gallagher (Reference 2) and by Parsly (Reference 1). Pasedag shows that the total reduction in drop mass transfer surface area over a 100-foot fall due to these phenomena is only about 10 percent. Parsly recommends for calculational purposes that a mean drop diameter of 25 percent larger than the actual mean be used to conservatively compensate for coalescence and size distribution. The calculations in Subsection 15.6.5 assume a mean drop diameter of 1250 microns, which conservatively estimates the iodine removal half-life.

Table 6.2-80 lists the sprayed regions in the containment. The spray headers are designed to directly spray approximately 85 percent of the containment free volume. In addition the unsprayed areas are designed to allow, as much as possible, the free exchange of air with the sprayed area to prevent the pocketing of fission products.

Due to the relatively low surface to volume ratio in the reactor containment it is not expected that wall effects will play a large part in the removal of iodine by spray solution. No wall effects are included in the calculation in Subsection 15.6.5.

The mathematical models used in calculating iodine removal by spray are presented in Subsection 15.6.5. These models assume that the spray removal function is effective throughout the containment sprayed volume and that the effectiveness is constant. Credit for mixing between the containment sprayed and unsprayed volumes is described in Subsection 15.6.5, in conjunction with the discussion of the multi-compartment spray model used to calculate iodine removal rate constants.

6.5.2.4 Tests and Inspections

Subsection 6.2.2.4 discusses the tests and inspections performed to verify the functional capability of the spray system and components, including active valves, pumps, and the spray nozzles, to deliver the required flow for containment heat removal.

Demonstration of those drawdown characteristics of the SAT and RWST which provide flow at the proper pH for effective iodine removal is also discussed in Subsection 6.2.2.4.

The spray additives are sampled on a periodic basis to verify their continued state of readiness.

6.5.2.5 Instrumentation

The system is provided with instrumentation and control to allow the operator to monitor the status and operation of the Containment Spray System from the control room to allow the automatic or manual initiation of the injection mode of operation. The instrumentation details are presented in Subsection 6.2.2.5.

The SAT is steam heated, with the steam flow controlled by a temperature controller, which modulates a pneumatic-operated flow control valve. Low temperature of the tank is alarmed at the main control board (MCB). The tank level is indicated at the MCB. Refueling water storage tank instrumentation is described in Subsection 6.3.5.

Each of the SAT discharge valves may be opened either manually by the operator or automatically upon receipt of the containment spray signal.

The valve positions are indicated at the MCB, above the control switches and also as a part of a separate status monitoring indication system.

6.5.2.6 Materials

The spray solution is stored in the spray additive tank (SAT), and the RWST holds a boron solution. Both tanks are constructed of stainless steel which has been shown to be resistant to chemical attack by the respective stored solutions of 2400 to 2600 ppm boron (as boric acid) and 19 to 21 percent by weight of sodium hydroxide. The spray solution is not susceptible to radiolytic or pyrolytic decomposition under the conditions anticipated in the post-accident environment. The corrosion properties of the spray solution are discussed in detail in Subsection 6.2.2.2.

6.5.3 Fission Product Control Systems

This section provides a discussion of the operation of all fission product control systems following the design basis loss-of-coolant accident (LOCA).

6.5.3.1 Primary Containment

The primary containment is a reinforced concrete structure with a hemispherical dome. The concrete thicknesses of the vertical wall and the dome are 4½ feet and 3½ feet respectively. A welded steel liner plate is anchored to the inside face of the concrete to function as a leaktight membrane. Figure 1.2-2, Figure 1.2-3, Figure 1.2-4, Figure 1.2-5, Figure 1.2-6 show typical sections through the containment and the location of the hydrogen purge system equipment and ductwork. Table 6.5-7 summarizes the operation of the containment following a LOCA. Calculation of offsite doses following a LOCA is discussed in Subsection 15.6.5. For the conservative case, 0.20 percent of the containment air mass is assumed to leak to the containment enclosure during the first 24 hours following an accident, and 0.10 percent/day thereafter. For the realistic case, 0.10 percent of the containment air mass is assumed to leak during the first 24 hours and 0.05 percent/day thereafter. The offsite doses presented in Subsection 15.6.5 are based on a containment free volume of 2.715×10^6 ft^3.

The iodine removal function and effectiveness of the Containment Building Spray System is discussed in Subsection 6.5.2. This system will begin operation within 62 seconds after receipt of a LOCA-generated "P" signal, as described in Subsection 6.2.1.1.

The function of the containment isolation systems is discussed in Subsection 6.2.4.

No credit is taken for iodine removal by the Containment Online Purge System since it is only operated intermittently during normal plant operation and will isolate on a containment isolation signal if operating at the onset of an accident. Radiological consequences of this occurrence are addressed in Subsection 15.6.5.

The combustible gas control system hydrogen recombiners, permanently located inside the containment, are designed to be operational within seven days following a DBA as described in Subsection 6.2.5. Should both recombiners be inoperable for 50 days after the DBA, hydrogen concentration in the containment will be controlled by use of the hydrogen purge line to the plant vent via the Containment Enclosure Emergency Cleanup System described in Subsection 6.5.1.

6.5.3.2 Secondary Containment

The secondary containment is comprised of a reinforced concrete cylindrical structure with a concrete hemispherical dome, the Engineered Safety Features (ESF) equipment cubicles, and the pipe and electrical penetration areas.

The release of airborne contamination following an accident due to leakage into the containment enclosure (the secondary containment) is controlled by a filtered exhaust system which maintains a subatmospheric pressure in each subcompartment. The Containment Enclosure Emergency Cleanup System (CEECS) is the only fission product control system in the secondary containment. This system directs a nominal 2000 cfm of charcoal filtered exhaust air to the plant vent. Actual exhaust flow rate will be the sum of the primary containment leakage (see Subsection 6.5.3.1) and the inleakage from the surrounding environment. See Section 6.2.3.3.a for a description of the analyses performed to demonstrate the capability of the system to draw down the Containment Enclosure Building to the design negative pressure within the design bases draw down time. Iodine removal efficiency of the charcoal beds is assumed to be 85 percent for organic iodide and 95 percent for inorganic iodine for the conservative case; for the realistic case, the iodine removal efficiency is assumed to be 95 percent for organic iodines and 99 percent for inorganic iodines.

The air recirculation system for the ESF cubicles serves only for cooling and provides no fission product control function; therefore, no mixing fraction was assumed. The gross volume of each compartment in the containment enclosure is listed in Table 6.5-7.

Anticipated and conservative assumptions concerning the fission product control functions of the secondary containment and the time sequence of events assumed in offsite dose estimates are discussed in Chapter 15.

Figure 9.4-5, Figure 9.4-6, Figure 9.4-7 and Figure 9.4-8, show each secondary containment area, the ventilation system associated with that area and the locations of exhaust intakes.

There is no non-ESF filter systems used to control pressure and fission product release in these areas.

6.5.4 References

1. Parsly, L.F., "Design Considerations of Reactor Containment Spray Systems - Part VII, A Method for Calculating Iodine Removal by Sprays," ORNL-TM-2412 - Part VII, Feb. 1970.
2. Pasedag, W.F. and Gallagher, J.L., "Drop Distribution and Spray Effectiveness" Nuclear Technology, Vol. 10, April 1971.

6.6 IN-SERVICE INSPECTION OF CLASS 2 AND 3 COMPONENTS

The in-service inspection program for Class 2 and 3 components is defined in the Technical Specifications. In general, this program meets all the requirements of the ASME Code, Section XI, Edition and Addenda as required in 10 CFR 50.55a. The references to ASME Section XI contained in paragraphs 6.6.6 are from the 1983 Edition Summer 1983 Addenda.

6.6.1 Components Subject to Examination

The welds selected for examination in Class 2 piping systems have been determined in accordance with the requirements of the 1974 Edition of ASME Section XI with Addenda through Summer of 1975 as allowed or required by 10 CFR 50.55a, Paragraph (b)(2).

All Class 2 components that do not meet the exemption requirements of IWC-1220, except the containment spray piping beyond the last downstream valve, will be examined in accordance with the requirements of IWC-2000, using the methods listed in Table IWC-2500-1 or the alternatives allowed by the Code Case entitled "Alternative Rules for Examination of Class 2 Piping."

Containment spray piping beyond the last downstream valve is exempted from in-service inspection for the following reasons:

a. These lines are normally empty and are required to function only in the unlikely event of a major LOCA or a main steam line break.

b. These lines are not subject to fluctuating stresses, so that propagation of cracks due to defects in the pipe is unlikely.

c. Spray piping welds are examined by radiography during fabrication, so that large defects that could cause catastrophic failure during system operation will be detected and repaired during fabrication and installation of the piping.

d. This piping contains hundreds of open nozzles so that splits or cracks which do not directly cause catastrophic failure would not have a marked effect on the function of the system.

e. System pressure is low, so that pressure stresses in the piping would be unlikely to cause failure in the presence of small defects.

All Class 3 components shall be examined per the requirements of Subsection IWD.

Safety classifications of all components are presented in Subsection 3.2.

6.6.2 Accessibility

The design and arrangement of Class 2 and Class 3 components provides adequate clearances to conduct the required examinations at the Code-required inspection interval. In general, access has been provided for examination of welds by proper layout of piping and equipment. Where surface or volumetric examination is required, insulation has been designed to be quickly and easily removed and replaced. Inaccessible Class 3 lines have been provided with taps to permit pressure decay tests in lieu of visual examination, as permitted in IWD-2000. Provisions for pump tests, as required by IWP-2000, have been made by incorporating suction and discharge pressure-measuring devices or flow measurement orifices adjacent to each safety class pump. Clearances around the pumps have been maintained to permit access for rotation speed and vibration measurements. Provisions for valve tests, as required by IWV-2000, have been incorporated by including valve position indicators in the design, as required, and by maintaining clearances for access to the valves.

6.6.3 Examination Techniques and Procedures

In general, where volumetric examination is required to be performed, manual ultrasonic techniques are employed rather than radiography. Where equipment configuration, layout, or other considerations, make it undesirable to perform a manual ultrasonic examination, an automatic technique is employed. Radiography is employed if ultrasonic examination fails to give meaningful results. For components of the reactor coolant pressure boundary, see Subsection 5.2.4.

Where surface examination is required, carbon steel components are typically examined by the magnetic particle method, and stainless steel components by the liquid penetrant method. The liquid penetrant method may be used when component size, geometry or space restriction prevents magnetic particle examination of carbon steel components.

The steam generator tubing is examined by the eddy current method (see Subsection 5.4.2.5).

All examination techniques are qualified to Section V or Section XI of the Code, using qualified personnel.

6.6.4 Inspection Intervals

The inspection schedule for Class 2 and Class 3 components is in accordance with subarticles IWC-2400 and IWD-2400, and is included in the Technical Specifications.

6.6.5 Examination Categories and Requirements

The examination categories and requirements for Class 2 components are in agreement with Section XI, Article IWC-2000.

For Class 3 components, the requirements of Section XI, Article IWD-2000, are complied with, as applicable.

6.6.6 Evaluation of Examination Results

a. Evaluation of Class 2 examination results will comply with the requirements of IWC-3000 of Section XI which applies the rules of IWB-3000. In general, indications detected during in-service examination that exceed the acceptance standards of IWB-3000 of the 1983 Edition, with addenda up to and including summer 1983, will require repair in accordance with IWC-4000 of Section XI.

b. Repair procedures for Class 2 components comply with the requirements of IWC-4000 of Section XI.

c. Evaluation of Class 3 components is consistent with IWD-3000 of Section XI which also applies the rules of IWB-3000. Visual examinations of Class 3 components consist of evaluations for leakage and integrity of structural attachments. Defects will be evaluated per IWB-3000 and repairs performed in accordance with the requirements of IWD-4000 of Section XI.

   In general, evaluation of leakage in Class 3 piping will be consistent with the intent of IWA-3000, since defects resulting in perceptible leakage are not acceptable.

d. Defects in Class 3 pressure boundary components will be removed or reduced to acceptable size by grinding, cutting, or drilling. If the defect and the repair do not encroach on the minimum wall, then no repair welding will be required. Repaired surfaces will be smoothly blended into the surrounding material with no discontinuities. If the defect or its removal encroaches upon the minimum wall thickness, the area will be built up to the minimum wall thickness by welding, and the surfaces smoothly blended into the surrounding surface. If the built-up material thickness of carbon steel components that have been repaired by welding is greater than ¾", post-weld heat treatment is required.

6.6.7 System Pressure Tests

The system pressure testing program for Class 2 components complies with the requirements of IWC-5000 of Section XI.

The system pressure testing program for Class 3 components complies with the requirements of IWD-5000 of Section XI.

6.6.8 Augmented In-Service Inspection to Protect Against Postulated Piping Failures

As stated in Section 3.6(B).2.1.a.4, for main steam and feedwater piping penetrating containment, no breaks were postulated between the first pipe whip restraint inside the containment and the five-degree restraint outside containment. To protect against postulated piping failures, this piping is subject to augmented inservice inspection as defined in the Risk-Informed ISI Break Exclusion Region (BER) evaluation (EE-07-035). The augmented lines are:

MS-4000-02-30"	FW-4606-03-18"
MS-4000-41-30"	FW-4606-04-16"
MS-4001-02-30"	FW-4607-03-18"
MS-4001-41-30"	FW-4607-04-16"
MS-4002-02-30"	FW-4608-03-18"
MS-4002-37-30"	FW-4608-04-16"
MS-4003-02-30"	FW-4609-03-18"
MS-4003-37-30"	FW-4609-04-16"

6.7 MAIN STEAM ISOLATION VALVE LEAKAGE CONTROL SYSTEM (BWR)

Not applicable to Seabrook.

6.8 EMERGENCY FEEDWATER SYSTEM

6.8.1 Design Bases

The Emergency Feedwater (EFW) System provides the capability to remove heat from the Reactor Coolant System during emergency conditions when the Main Feedwater System is not available, including small LOCA cases. The EFW System operates over a time period sufficient to cool down the Reactor Coolant System to temperature and pressure levels at which the Residual Heat Removal System can operate. Under certain design basis scenarios, condensate storage tank inventory may be depleted prior to affecting the transition to RHR cooling. However, sufficient steam generator inventory will exist to maintain cooling until the RHR system can be placed in operation. For Station Blackout, the EFW turbine-driven pump will operate during the four-hour coping duration to cool down and maintain the secondary side pressure at about 250 psig (see Section 8.4.1). During all other modes of plant operation, including startup, hot standby, and normal operation up to full power load, the EFW system has zero flow.

The EFW system is designed to meet the following safety-related functional requirements:

a. A malfunction or single active failure of a system component or nonessential equipment does not reduce the performance capabilities of the system.

b. The functional performance of system components is not affected by adverse environmental occurrences, abnormal operational requirements, and off-normal conditions such as small breaks in the Reactor Coolant System or the loss of offsite power.

c. System components and piping have sufficient physical separation and shielding to protect against the effects of internally and externally generated missiles.

d. The functional performance of the system is not affected by pipe whip and jet impingement that may result from high or moderate energy piping breaks or cracks.

e. The system possesses diversity in motive power sources so that the system performance requirements are met with either power source.

f. The system design precludes the occurrence of fluid flow instability during normal plant operation and during upset or accident conditions.

g. Provisions are included to verify correct system operation, to detect and control system leakage, and to isolate portions of the system in case of excessive leakage or component malfunctions.

h. The system is capable of automatically initiating flow upon receipt of a system actuation signal. The system is also capable of manual actuation to provide protective action and for operational testing independent of the automatic signal. Single failure of the manual circuit will not result in loss of the system function.

i. The system design possesses the capability to automatically terminate flow to a depressurized steam generator, while providing flow to intact steam generators.

j. For Station Blackout analysis, no other active or passive failures, other than those causing the Station Blackout, nor other design basis events such as seismic or line breaks are assumed to occur (see Section 8.4.1).

The Emergency Feedwater System is designed in accordance with ASME Code Section III, Class 3; IEEE Standards 323-1974 and 344-1975, Class 1E; and Seismic Category I requirements. System components are located within Seismic Category I structures and are thereby protected against effects of natural phenomena.

The design of the EFW system was reviewed subsequent to the issuance of the NRC's March 10, 1980 letter to near-term operating license applicants (TMI-2 Task Action Plan, NUREG-0737, Item II.E.1.1). The review addressed the following areas:

a. Subsection 10.4.9 of the Standard Review Plan

b. Branch Technical Position ASB 10-1

c. Generic short-term and long-term requirements applicable to the EFW system design, and operating procedures

d. A reliability evaluation of the EFW system as outlined in NUREG-0611.

An item-by-item discussion of the EFW system's compliance with each requirement was provided by applicants letter to NRC, dated July 27, 1982.

6.8.2 System Description

Upon loss of normal feedwater flow, the reactor is tripped, and the decay and sensible heat is transferred to the steam generators by the Reactor Coolant System via the reactor coolant pumps or by natural circulation when the pumps are not operational.

Heat is removed from the steam generators via the main condensers or the main steam safety and/or steam generator atmospheric relief valves. Steam generator water inventory is maintained by water makeup from the Emergency Feedwater System. The system will supply feedwater to the steam generators to remove sufficient heat to prevent the over-pressurization of the Reactor Coolant System, and to allow for eventual system cooldown.

The Emergency Feedwater System is comprised of two full-sized pumps (one motor- and one turbine-driven) whose water source is the Condensate Storage Tank (CST). Suction lines are individually run from the CST to each pump. A common EFW pump recirculation line discharges back to the Condensate Storage Tank. This return line functions for recirculation pump testing and ensures minimum flow to prevent pump damage for any system low-flow operating condition. Both pumps feed a common discharge header, which in turn supplies the four emergency feed lines. The common discharge header includes normally open gate valves between each branch connection to provide isolation in the event of a pipe break or for maintenance. Each emergency feed line is connected to one of the main feedwater lines downstream of the feedwater isolation valve. Each main feedwater line enters the containment through a single penetration and feeds a single steam generator. For a diagram of the Emergency Feedwater System see Figure 6.8-1 and Figure 6.8-2.

Additional redundant pumping capability is provided by the startup feed pump in the feedwater system. The head and capacity curves for these pumps, which are plotted on the same sheet, show that the startup pump has sufficient capacity to serve as backup for the emergency feedwater pumps (see Figure 6.8-3). The startup feed pump (and steam generator wet-lay-up pumps) discharge line inside the Emergency Feedwater Pump Building and Main Steam and Feedwater Pipe Chase are seismically supported. All connections from these lines to other plant piping include normally closed valves. Valve and pump operation is administratively controlled. During normal plant operation, these lines are not pressurized. Valves V156 and V163 are normally closed, and are furnished with a motor operator.

Figure 10.4-6 and Figure 10.4-7 also shows a valve in the branch line from the EFW turbine-driven pump suction line for use as a connection for emergency makeup from the condensate storage tank to the spent fuel pool or from the fire protection system to the condensate storage tank. This valve is normally closed, and is administratively opened. Additional makeup to the CST is available from the demineralized water storage tank (DM-TK-259) using the portable cooling tower makeup pump (SW-P-329) via demineralized water system valves DM-V-677, V-800, and V-490 (see Figure 9.2-15).

A dedicated 194,000 gallons of demineralized water is maintained in the lower half of the condensate storage tank for the exclusive use of the Emergency Feedwater System. For a description of the condensate storage facility see Subsection 9.2.6. Makeup to the tank is provided by the Demineralized Water Makeup System (see Subsection 9.2.3).

The motor-driven pump and pump controls are powered from an emergency bus. The startup feed pump is also capable of being powered from an emergency bus (see Subsection 8.3.1.1.b.9.(a)), and diesel generator capacity is available to start this pump while carrying the maximum load listed in Table 8.3-1 (See Subsection 8.3.1.1.e.6). Steam for the turbine-driven pump is supplied from either of two main steam headers via branch lines connected upstream of the main steam isolation valves. Each branch line includes an air-operated, fail-open valve. The common EFW steam header contains one air-operated fail open valve (see Subsection 10.3.2.5). A summary of pump data is provided in Table 6.8-1.

The branch lines to each steam generator include a manual gate isolation valve, two motor-operated flow control valves, a flow venturi, and a flow orifice. The flow control valves are normally in the open position when the system is not operating and are automatically closed during system operation in the event of a pipe break. These valves can be operated remotely as described in Subsection 6.8.5 to control steam generator water level. Two valves in series are provided for redundancy and are powered from different trains. Each valve is also provided with a handwheel to permit manual operation. The open position of the flow control valves for system limiting conditions will be set to insure the minimum required flow of 470 gpm to three steam generators and a minimum total flow of 650 gpm to four steam generators with one EFW pump operational.

6.8.3 Safety Evaluation

The Emergency Feedwater (EFW) System components, instrumentation, and power supplies are sized and designed with sufficient redundancy to maintain the system's safety-related functions under all credible accident conditions. The combination of one turbine-driven pump and one motor-driven pump provides a diversity of power sources to assure delivery of feedwater under emergency conditions.

The system has been designed to provide the required flow following a single active failure and a loss of offsite power and has been evaluated for a Station Blackout event (see Section 8.4.1). The common discharge header is not normally pressurized during normal plant operation.

Figure 10.4-8 and Figure 10.4-9 shows the Main Feedwater System, the tie-in of the EFW and four individual stop-check valves. These check valves (FW-V76, -V82, -V88 and V94) prevent backflow of feedwater from the main feedwater system or the steam generator (SG).

Steam supply for the turbine-driven emergency feedwater pump is from either of two main steam headers via branch lines connected upstream of the main steam isolation valves. The branch lines contain normally closed, fail-open air-operated EFW isolation valves MS-V393 and MS-V394. These valves also serve a containment isolation function. These valves are controlled by Class 1E 125V DC solenoids. Branch isolation valve MS-V393 is controlled by a Train A solenoid valve and the alternate branch isolation valve, MS-V394, is controlled by redundant Train A and Train B solenoid valve. The common EFW steam supply line contains a normally closed, fail-open air-operated valve (MS-V395). This valve is controlled by both Train A and Train B Class 1E solenoids. Isolation valves MS-V393 and MS-V394 open in response to an EFW initiation signal to admit steam to MS-V395. Valve MS-V395 is timed to sequentially open following opening of either MS-V393 or MS-V394. The sequential opening of MS-V395 allows for pressurizing the EFW steam header to discharge accumulated condensate via system drains prior to introducing steam to the turbine governor valve. Approximately 45 seconds following an EFW initiation signal, MS-V395 is full open and supplying steam to the mechanical hydraulic turbine governor valve.

The east and west EFW steam supply branches and the common header each contains a condensate drain pot and steam trap arrangement. The common header drain pot contains a constant steam vent line. The composite drain assemblies provide for minimizing accumulated steam header condensate during an EFW System standby, startup, and operational condition.

The outside containment Steam Generator Blowdown isolation valves close automatically whenever an EFW pump is in operation. Blowdown isolation during EFW pump operation is a required support function that preserves Steam Generator and Condensate Storage Tank inventory. The outboard SB isolation valves are fail closed, air operated valves which are controlled by independent A-train and B-train pilot solenoid valves. The close signals for EFW pump operation derive from either position limit switches on MS-V393 (Train A) and MS-V394 (Train A and Train B), or motor-driven EFW pump breaker position.

The EFW supply has two safety-grade flow control valves for each steam generator. One valve in each supply is powered by the A train emergency power source and the other valve is powered from the B train. The primary (or normal) flow control valves for the A and C steam generator will be powered by the A train with B and D steam generators' valves powered by the B train. Backup flow control valves will be powered from the opposite emergency power train. These valves can be controlled from either the main control board or the remote shutdown panel using safety-grade controls.

The five valves in the EFW pump discharge header are furnished with gear operators so that a concern for power diversity is not applicable.

The design and operation of the EFW system has been reviewed regarding the occurrence of hydraulic instabilities, characterized as water hammer. The EFW system is connected to the main feedwater system through stop-check valves outside the containment. The flow regulating valves in each EFW line are normally open, and are sized to pass the required flow under accident conditions. The only action required to establish EFW flow is to start the pumps. One pump has sufficient capacity to furnish the required flow to the Nuclear Steam Supply System.

An analysis of the EFW system has established that its function and performance are not affected by the common causes for loss of flow resulting in water hammer, such as pump trip, or rapid valve closure. A pressure transient in the main feedwater system resulting from a pipe break, pump trip, and/or valve closure would be dissipated before flow is established in lines to each SG. A trip of one pump will not affect the capability of the other pump to provide flow to the intact SGs. The only automatic valve closure in the EFW system would occur in the line to a faulted SG. During operation of the EFW system, the plant operators can initiate any changes in flow to each SG, as required.

The EFW pumps' supply and recirculation line piping runs from nozzles on the Condensate Storage Tank (CST) to the EFW pumphouse. The CST nozzles and adjacent piping are protected by a seismic Category I structure which is part of the CST enclosure and tornado-missile shield. The piping is routed underground and runs below grade into the EFW pumphouse, also a seismic Category I structure.

The EFW pump recirculation line to the CST, is designed to ASME Code Section III, Class 3 seismic Category I requirements. Valves FW-V346 and FW-V347 are administratively opened for EFW pump-surveillance testing and as required ensuring minimum EFW pump flow during system operation.

All safety related active and passive components of the EFW system are contained in missile protected buildings or are underground with the exception of the turbine driven EFW pump exhaust stack. The unshielded stack was analyzed for tornado missile risk and found to have a low mean value impact probability, calculated in the range of 8.78×10^{-11} per year to 4.95×10^{-8} per year.

The water lines to the oil cooler are designed to seismic Category I requirements. Water lines from the oil cooler are designed to ASME Code Section III, Class 3, seismic Category I requirements. The breakdown orifice in the line to the oil cooler limits the flow to 2-3 gpm. This flow was considered in sizing the pump capacity. In the unlikely event of pipe failure, this flow will easily be handled by the pump room floor drains.

An accident analysis for this system in conjunction with the loss of the Main Feedwater System is provided in Chapter 15. A failure analysis of the Emergency Feedwater System following a feedwater pipe break is provided in Table 6.8-2.

6.8.4 Tests and Inspections

Prior to initial plant startup, the Emergency Feedwater System is hydrostatically tested in accordance with the requirements of the ASME Boiler and Pressure Vessel Code, Section III, Class 3, and pre-operationally tested as described in Chapter 14.

Periodic testing in accordance with Technical Specifications will be performed during normal plant operation. During periodic surveillance testing of the EFW pumps, manual valve alignments will be required. Only one EFW pump will be tested at a time. Because each EFW pump is capable of providing 100 percent of required flow, full system flow requirements will be available at all times. Automatic indication of EFW pump inoperable status is provided as discussed in subsection 7.1.2.6.

6.8.5 Instrumentation Requirements and Controls

The Emergency Feedwater System will be actuated automatically on loss of offsite power, low-low level in any of the steam generators, safety injection signals or an ATWS mitigation system actuation signal. The engineered safety feature actuation system details are presented in Section 7.3. The ATWS mitigation system is discussed in Section 7.6. Manual controls for the turbine-driven pump steam supply valves are located at the main control board (MCB), as well as at the remote safe shutdown (RSS) panel. For the motor-driven pump, the controls are located at the MCB and in the switchgear room. The suction and discharge pressures of both pumps are indicated locally. Pump discharge pressure and CST level indication are provided on the MCB. Low suction pressures are alarmed at the MCB.

Flow indications for all four individual emergency feedwater lines are provided. Safety grade flow orifice instrumentation readouts are displayed at the MCB. The instruments are powered from the safety grade inverters - A and C steam generators on the Train A inverter, and B and D steam generators on the Train B inverter. These instrumentation channels meet or exceed the requirements for Design Category 2 instrumentation as provided in Subsection 7.5.5. The design details of the accident monitoring instrumentation are presented in Table 7.5-1. Flow venturi are also provided in each emergency feedwater line. Two of the four flow venturi instrumentation readouts are displayed at a RSS panel, and the remaining two flow venturi instrumentation readouts are displayed at a second RSS panel.

A sustained high-flow condition in any of the lines is indicative of a line break. A break isolation is incorporated so that the affected line will be isolated by automatically closing the motor-operated valves on high flow signals from redundant flow instrumentation. Break isolation is required to conserve CST inventory and to provide the required flow to the intact steam generators. High flow alarms are also provided to alert the operator to this condition. The break isolation system is designed so that a single failure will not prevent break isolation or prevent emergency feedwater flow to at least two steam generators. Manual override provisions are also incorporated at the MCB as well as at the RSS panels, along with the open/close valve position indication. Each of the motor-operated control valves in each branch line is provided with fully independent power supplies, instrumentation, and controls to ensure that at least one of the valves in each branch line can be closed when needed. All eight valves can be operated from the MCB. Four of the valves, one in each branch, can also be operated from an RSS panel and the remaining four valves, one in each branch, can be operated from a second RSS panel. To transfer control to the RSS panel, remote/local selector switches on the RSS panels (CP-108A/B) and RSS disabling panels (CP-450A/B) must be transferred to the local position. The associated control switches are located on the MCB and the RSS panel so that the valves normally used to control flow have the same train assignment as the flow indication for the steam generator (i.e., A and C SG are normally controlled with the A train control valves and B and D SG with B train valves). Thus, complete redundancy is provided to control flow or to isolate any steam generator in the event of pipe breaks.

The review of the emergency feedwater flow indication was performed as part of the detailed control room design review (DCRDR). As part of this effort, a determination of the needed characteristics of this display to support the emergency operating procedures (EOPs) was made. A comparison of the needed characteristics against the available instrumentation was made, and no deficiencies were found.

Each EFW pump recirculation line contains a normally closed motor-operated valve powered from its respective train.

Associated remote-manual control switches are located at the MCB and at RSS panels CP-108A and CP-108B for EFW pumps P-37A and P-37B respectively.

A flow orifice and associated instrumentation are provided in the common pump discharge recirculation path to the CST. This instrumentation is provided to permit periodic testing of the pumps to verify proper head-flow characteristics during periodic pump testing and to monitor recirculation flow during normal operation. Alarms are also provided to indicate that either train of the Emergency Feedwater System is inoperative. The design features of the bypass and operable status alarm system which provide system level indications in compliance with Regulatory Guide 1.47 are presented in Subsection 7.1.2.6.

APPENDIX 6A DESIGN GUIDELINES FOR IN-SERVICE INSPECTION OF PIPING SYSTEMS

The information in this Appendix was not revised, but has been extracted from the original FSAR and is provided for historical information. Current design guidelines for in-service inspection of piping systems are controlled by the Design Control Program.

1.0 INTRODUCTION

To verify the safety of a nuclear power plant on a continuing basis, the Owner must establish a program of in-service examination and testing such as is defined by Section XI of the ASME Boiler and Pressure Vessel Code.

This program will include volumetric, surface and visual examination of welded joints in safety-related equipment and piping and operability assurance testing of safety-related pumps and valves.

It will be necessary for the nuclear power plant designer to provide access to the items to be examined, and for this reason, he must be cognizant of the clearance requirements for in-service inspection. It is intended that this general design guide provide the designer with the information required to guarantee the necessary access.

1.1 WELD PREPARATION FOR INSPECTION

In order to provide assurance that the results of volumetric examination, especially ultrasonic data, are interpretable, piping welds should be prepared in such a way as to minimize random reflections and provide standardized configurations. Figure 7 describes weld preparation for In-service Inspection.

2.0 ACCESS REQUIREMENTS FOR IN-SERVICE INSPECTION

2.1 GENERAL REQUIREMENTS

Examination of welds can be conducted either manually or by using automatic devices. The clearance requirements vary according to the method used. By means of special probes, the mechanized inspection can be conducted in much tighter areas than the manual inspection where much larger personnel access is required. The method used is also dependent on the environmental conditions in the area. Provision shall be made to ensure adequate access and work space for personnel and equipment in order to meet code requirements for in-service inspection. Unless otherwise specified, manual inspection will be assumed where there are no physical limitations preventing manual access; mechanized inspection will be assumed where there are physical limitations preventing manual access. Where direct manual operations are required, clearance shall be provided for the head and shoulders of a man within arm's length of the surface of the object to be inspected.

2.1.1 Access Requirements for Volumetric Examination

a. Mechanical Inspections

The standard butt weld inspection device and its associated tracks, used for mechanized inspection require a longitudinal clearance of 26½ inches and a radial clearance of 8½ inches around the entire longitudinal access (Figure 1). All insulation and obstructions shall be removable from the clearance area to perform the examinations. Personnel access is needed on one side to place the device on the tracks.

Ideally, the weld should be inspectable from both sides, but certain situations may restrict the access to enable inspection from one side only. Figure 2 shows some such situations and calls for the minimum clearances needed to perform inspections meeting code requirements. The clearances specified are for mechanized inspections.

b. Manual Inspection

For pipe-to-pipe circumferential welds, the minimum longitudinal clear access on either side of the weld center line shall be 2T + 4 inches (6 inches minimum), where 'T' is the pipe wall thickness (Figure 3). For pipes less than 12 inches nominal size, a radial clearance of at least 24 inches shall be provided on one side and a minimum of 8 inches on the other sides. Radial clearance of 8 inches is required to operate the inspection equipment. For pipes greater than 12 inches nominal size, personnel radial clearance of 24 inches shall be provided on two opposite sides of the pipe. Access on the two sides is needed since a technician is unable to reach all weld surfaces around large diameter pipes from one side. Such clearance requirements should be an important consideration for parallel piping runs. The clearance envelope needed for such runs shall be as shown in Figure 4.

Pipe-to-nozzle and pipe-to-fitting welds requiring clearances shall be as shown on Figure 5. Branch pipe or fitting connections located near circumferential butt welds requiring ultrasonic inspection must be so located that a clear distance equivalent to 2T + 4 (6 inches minimum) inches exists between the toe of the branch weld and center line of the circumferential butt welds.

2.1.2 Access Requirements for Surface Examination

For surface inspection the longitudinal access shall be sufficient for placement of magnetic particle probes or dye penetrant brushed on the weld surface. A practical minimum length of access is 6 to 8 inches.

2.1.3 Access Requirements for Visual Examination

Piping systems subject to visual in-service inspections shall be designed with access to welds which shall allow direct visual access with or without mirrors. For direct observations, the eye shall not be more than 24 inches away from the weld surface with the line of vision making at least a 30 degree angle with the surface to be examined for remote observations. Clearances shall be provided for the use of optical devices. The examination shall be carried out in a light that shall be sufficient to resolve a" line on 18% neutral gray card.

2.1.4 Access Requirements for Removable Insulation

Piping systems with insulation shall have clearances for removal and storage of insulation materials around the welds to be examined. Insulation normally comes in two sections for pipes up to 25 inches O.D. and in three sections for sizes over 25 inches. For insulation comprised of two sections, the clear area around the insulation should be at least one-half the diameter of the pipe, plus two times the insulation thickness plus an allowance for any lifting devices which might be placed on the insulation. This clearance must be provided on at least one section of the insulation since the second half may be slid around the pipe for its removal. For three section insulation, the clearance area should be at least one-quarter the diameter of the pipe plus two times the wall thickness of the insulation plus an allowance for any required lifting devices. For insulated pipes with longitudinal welds on either sides of the circumferential welds, pipe insulation shall be removable for a minimum distance of 15 inches on either side of the circumferential weld edge. These requirements are illustrated in Figure 6.

3.0 OTHER LAYOUT CONSIDERATIONS

3.1 PROHIBITED CONFIGURATIONS

Certain system configurations which place fittings adjacent to each other are undesirable and prohibited from the in-service inspection point of view. Piping design should preclude the following fitting configurations:

a. Valve to valve
b. Valve to tee
c. Valve to reducer
d. Tee to tee
e. Elbow to elbow
f. Reducer to elbow
g. Valve to elbow
h. Nozzle to elbow

3.2 WELD SPACING

The spacing between circumferential welds shall be 2T + 2 inches (6 inches minimum). Straight sections or spool pieces between the fittings shall be provided. The minimum spool piece length shall be 2T + 4 inches (6 inches minimum).

Branch pipe or fitting connections located near circumferential butt welds requiring ultrasonic inspection must be located so the distance equivalent to 2T + 4 inches exists between the toe of the branch weld and center line of the circumferential butt weld. This distance, however, shall not be less than 6 inches.

The designer shall review the pipe hanger, supports, seismic and pipe whip restraints to assure that this hardware does not interfere with the access already provided. No permanently installed part of any of these attachments shall be closer than 15" to the nearest circumferential weld. Removable parts shall not be installed closer than 2" from any circumferential weld.

3.3 PIPE CHASES AND PIPE RACKS

Where the piping is run in a pipe chase or groups of pipes banked together, care should be taken to assure that the piping to be inspected is located in the bank such that access can be acquired without having to remove other piping. An example would be a group of piping several tiers deep suspended from above. The piping requiring inspection should be in the bottom tier to permit access and inspection from the floor or platforms below already designed into the plant. This would keep the amount of miscellaneous platforms and temporary scaffolding to a minimum.

4.0 IN-SERVICE TESTING REQUIREMENTS FOR PUMPS AND VALVES

4.1 GENERAL REQUIREMENTS

The applicable edition of the ASME Code for pump and valve testing is the 1983 edition with addenda up to and including Summer, 1983.

SEABROOK STATION
UPDATED FINAL SAFETY ANALYSIS REPORT

CHAPTER 6
ENGINEERED SAFETY FEATURES

TABLES

6.1(B)-1	Principal Engineered Safety Features Metallic Materials
6.1(B)-2	Coated Areas on Major Equipment and Structures inside Containment
6.1(B)-4	Other Organic Materials in Containment
6.1(N)-1	Engineered Safety Feature Materials
6.1(N)-2	Protective Coatings on Westinghouse Supplied Equipment Inside Containment
6.2-1	General Information and Initial Conditions
6.2-2	Engineered Safety Feature Systems Information
6.2-3	Containment Passive Heat Sink Data
6.2-4	Passive Heat Sink Material Properties
6.2-5	Break Locations Postulated for Loss-of-Coolant Accident Analysis
6.2-6	Spectrum of Breaks Postulated for Loss-of-Coolant Accident Analysis
6.2-7	Single Active Failures Postulated for Loss-of-Coolant Accident Analysis
6.2-8	Calculated Peak Containment Pressure and Peak Containment Temperature Following Loss-of-Coolant Accidents
6.2-9	Loss-of-Coolant Accident Chronology for Various Break Locations
6.2-10	Initial Plant Operating Power Levels Postulated for Main Steam Line Break Analysis
6.2-11	Spectrum of Ruptures Postulated for Main Steam Line Break Analysis
6.2-12	Single Active Failures Postulated for Main Steam Line Break Analysis
6.2-13	Calculated Peak Containment Pressure and Peak Containment Temperature Following Full Double-Ended Guillotine Rupture in Main Steam Line

6.2-14	Calculated Peak Containment Pressure and Peak Containment Temperature Following Small Double-Ended Guillotine Ruptures in Main Steam Line
6.2-15	Calculated Peak Containment Pressure and Peak Containment Temperature Following Ruptures in Main Steam Line
6.2-16	Postulated Breaks for Subcompartment Analysis
6.2-30	Mass and Energy Release Rates Following Spray Line Rupture
6.2-31	Pressurizer Compartment Vent Path Description- Full Double-Ended Spray Line Break
6.2-32	Pressurizer Compartment Nodal Description and Peak Nodal Differential Pressure - Full Double-Ended Spray Line Break
6.2-33	Mass and Energy Release Rates - Surge Line Double-Ended Guillotine
6.2-34	Pressurizer Skirt Cavity Vent Path Description- Full Double-Ended Surge Line Break
6.2-35	Pressurizer Skirt Cavity Nodal Description- Full Double-Ended Surge Line Break
6.2-36	Cases Analyzed and Tables with Results
6.2-37	Double-Ended Pump Suction Guillotine (Maximum Safety Injection) - Slowdown Mass and Energy Releases
6.2-38	Double-Ended Pump Suction Guillotine (Minimum Safety Injection) - Blowdown Mass and Energy Releases
6.2-39	0.6 Double-Ended Pump Suction Guillotine - Blowdown Mass and Energy Releases
6.2-40	Three-Foot Squared Pump Suction Split - Slowdown Mass and Energy Releases
6.2-41	Double-Ended Hot Leg Guillotine- Blowdown Mass and Energy Releases
6.2-42	Double-Ended Cold Leg Guillotine - Slowdown Mass and Energy Releases
6.2-43	Double-Ended Pump Suction Guillotine (Minimum Safety Injection) - Reflood Mass and Energy Releases
6.2-44	Double-Ended Pump Suction Guillotine (Maximum Safety Injection) - Reflood Mass and Energy Releases
6.2-45	0.6 Double-Ended Pump Suction Guillotine - Reflood Mass and Energy Releases
6.2-46	Three-Foot Squared Pump Suction Split - Reflood Mass and Energy Releases

6.2-47	Double-Ended Cold Leg Guillotine - Blowdown Mass and Energy Releases
6.2-48	Double-Ended Pump Suction Guillotine (Minimum Safety Injection) - Post-Reflood Mass and Energy Releases
6.2-49	Double-Ended Pump Suction Guillotine (Maximum Safety Injection)- Post-Reflood Mass and Energy Releases
6.2-50	0.6 Double-Ended Pump Suction Guillotine - Post-Reflood Mass and Energy Releases
6.2-51	Double-Ended Pump Suction Guillotine (Minimum Safety Injection) - Mass Balance
6.2-52	Double-Ended Pump Suction Guillotine (Maximum Safety Injection) - Mass Balance
6.2-53	0.6 Double-Ended Pump Suction Guillotine - Mass Balance
6.2-54	Three-Foot Squared Pump Suction Split - Mass Balance
6.2-55	Double-Ended Hot Leg Guillotine - Mass Balance
6.2-56	Double-Ended Cold Leg Guillotine - Mass Balance
6.2-57	Double-Ended Pump Suction Guillotine (Minimum Safety Injection) - Energy Balance
6.2-58	Double-Ended Pump Suction Guillotine (Maximum Safety Injection) - Energy Balance
6.2-59	0.6 Double-Ended Pump Suction Guillotine- Energy Balance
6.2-60	Three-Foot Squared Pump Suction Split- Energy Balance
6.2-61	Double-Ended Hot Leg Guillotine - Energy Balance
6.2-62	Double-Ended Cold Leg Guillotine - Energy Balance
6.2-63	Double-Ended Pump Suction Guillotine (Minimum Safety Injection)- Principal Parameter Transients
6.2-64	Double-Ended Pump Suction Guillotine (Maximum Safety Injection)- Principal Parameter Transients
6.2-65	System Parameters
6.2-66	Full Double-Ended MSLB at Hot Shutdown (with SAF in Containment Spray System) - Mass and Energy Releases (Forward Flow)
6.2-67	Full Double-Ended MSLB at Hot Shutdown (with SAF in Containment Spray System) - Mass and Energy Releases (Reverse Flow)
6.2-68	Full Double-Ended MSLB at 102% Power (with SAF of Broken Loop MSIV) - Mass and Energy Releases (Forward Flow)

6.2-69	Full Double-Ended MSLB at 102% Power (with SAF of Broken Loop MSIV) - Mass and Energy Releases (Reverse Flow)
6.2-69A	Mass and Energy Balance Peak Calculated Containment Pressure for MSLB
6.2-69B	Mass and Energy Balance Peak Calculated Containment Temperature for MSLB
6.2-75	Containment Spray System Parameters
6.2-76	Heat Exchanger Performance Data
6.2-77	Containment Cooling - Active Component Failure Analysis
6.2-78	Deleted
6.2-79	Codes, Standards and Guides Applicable to the Containment Spray System
6.2-80	Containment Sprayed Volume
6.2-81	Effect of Drop Size on Spray Efficiency
6.2-82	Containment Enclosure Design and Performance Data
6.2-83	Containment Isolation System Design Information
6.2-84	Hydrogen Gas Analyzer Design Parameters
6.2-85	Applicable Codes, Standards, and Regulatory Guides Used in the Design of the Electric Hydrogen Recombiner
6.2-86	Electric Hydrogen Recombiner Typical Parameters
6.2-87	Containment Building Aluminum Inventory
6.2-88	Containment Building Zinc Inventory
6.2-89	Parameters Used to Evaluate CGCS Performance
6.2-90	Systems Open to Containment Atmosphere and/or Vented Prior to and During Type "A" Testing
6.2-91	Systems Not Vented During Type "A" Testing
6.2-92	Containment Liner Penetrations
6.3-1	Emergency Core Cooling System Component Design Parameters
6.3-2	Emergency Core Cooling System Relief Valve Data
6.3-3	Motor-Operated Isolation Valves in the Emergency Core Cooling System
6.3-4	Materials Employed for Emergency Core Cooling System Components
6.3-5	Failure Mode and Effects Analysis - Emergency Core Cooling System - Active Components

6.3-6	Emergency Core Cooling System Recirculation Piping Passive Failure Analysis - Long-term Phase
6.3-7	Manual Actions Required for ECCS Operation
6.3-8	Emergency Core Cooling System Shared Functions Evaluation
6.3-9	Normal Operating Status of Emergency Core Cooling System Components for Core Cooling
6.4-1	Control Room Complex Safety-Related Ventilation System Malfunction Analysis
6.5-1	Compliance of Containment Enclosure Air Cleaning Units to Regulatory Guide 1.52, Rev. 2, March 1978
6.5-2	Compliance of Fuel Storage Building Air Cleaning Units to Regulatory Guide 1.52, Rev. 2, March 1978
6.5-3	Compliance of Control Room Emergency Filtration Subsystem to Regulatory Guide 1.52, Rev. 2, March 1978
6.5-4	Containment Enclosure Emergency Air Cleaning System Materials
6.5-5	Fuel Storage Building Emergency Air Cleaning System Materials
6.5-6	Control Room Emergency Makeup Air and Filtration Subsystem Materials
6.5-7	Volumes of Containment Enclosure Areas
6.5-8	Containment Operation Following a Design Basis Accident
6.8-1	Emergency Feedwater Pump Data
6.8-2	Emergency Feedwater System Failure Analysis

TABLE 6.1(B)-1 PRINCIPAL ENGINEERED SAFETY FEATURES METALLIC MATERIALS *

Valves	
Bodies	SA-182, Grade F304 or F316 SA-351, Grade CF3M or CF8M
Bonnets	SA-182, Grade F304 or F316 SA-240, TP 304 SA-351, Grade CF3M or CF8M
Discs	SA-182, Grade F316 SA-479, TP 316
Closure bolting/studs	SA-453, Grade 660 SA-564, Grade 630
Nuts	SA-193, Grade B6 SA-194, Grade 6, 8F, or 8M SA-453, Grade 660
Tanks	
Shells and heads	SA-240, TP 304; SA-479, TP 304
Flanges and nozzles	SA-276, TP 304; SA-182, TP 304 SA-312, TP 304
Closure bolting and nuts	SA-193, Grade B8; SA-194, Grade 6
Pumps	
Pump casing	SA-351, TP 316
Piping	SA-213, TP 316
Pipe fittings	
Pipe plug, cross, bushing, & male connector	SA-182, TP 316
Nipple	SA-312, TP 316
Orifice	SA-479, TP 316
Closure studs and nuts	SA-193, Grade B8M; SA-194, Grade 8M or B8M

* Excluding NSSS-supplied

Heat Exchangers	
Shells and shell heads	SA-285, Grade C
Shell nozzles	SA-106, Grade B
Shell flanges	SA-105 (normalized)
Shell couplings	SA-105
Channel	SA-240, TP 304
Channel facing	SA-182, Grade F 304
Channel nozzles	SA-312, TP 304
Channel cover	SA-516, Grade 70 lined with SA-240, TP 304
Channel couplings	SA-479, TP 304
Tubes	SA-249, TP 304 (.05% max. carbon)
Tubesheets	SA-182, Grade F 304
Closure bolting and nuts	SA-193, Grade B7; SA-194, Grade 2H
Piping	SA-312, TP 304 or SA-358, TP 304
Fittings	SA-182, TP 304 or SA-403, Grade WP 304 or WP 304W
Flanges	SA-182, TP F304
Closure Bolting and Nuts	SA-193, Grade B8M or B8; SA-194, Grade 6
Weld Materials	SFA-5.1, 5.4, 5.9, 5.17, 5.18, 5.20

Table 6.1(B)-2 COATED AREAS ON MAJOR EQUIPMENT AND STRUCTURES INSIDE CONTAINMENT *

Component/Structures	Painted Surface Area (ft^2)
Containment Cylinder	63,774
Containment Dome	30,778
Miscellaneous Concrete	96,514
Structural Steel	64,688
Polar Gantry Crane	19,920
Floor and Sump	11,640
Equipment Hatch	3,250
Equipment Steel	2,345
Personnel Hatch	360
Containment Recirc. Unit	705

* Excluding NSSS-supplied

Table 6.1(B)-4 OTHER ORGANIC MATERIALS IN CONTAINMENT

Item	Material	Amount
Reactor coolant pump lubricant	Petroleum base oil	1,060 gal.
Cable insulation		50,000 lbs.
Power cable	Ethylene propylene rubber with Hypalon jacket	
	Silicone Rubber	
Control and instrument cable	Cross-linked polyethylene insulation with Hypalon jacket	

Table 6.1(N)-1 ENGINEERED SAFETY FEATURE MATERIALS

Valves	
Bodies	SA-182, Grade F316; SA-351, Grade CF8 or CF8M
Bonnets	SA-182, Grade F316; SA-351, Grade CF8 or CF8M
Discs	SA-182, Grade F316; SA-564, Grade 630; SA-351, Grade CF8 or CF8M
Pressure retaining bolting	SA-453, Grade 660
Pressure retaining nuts	SA-453, Grade 660; SA-194, Grade 6
Auxiliary Heat Exchangers	
Heads	SA-240, Type 304
Nozzle necks	SA-182, Grade F304; SA-312, Grade TP304; SA-240, Type 304
Tubes	SA-213, Grade TP304; SA-249, Grade TP304
Tube Sheets	SA-182, Grade F304; SA-240, Type 304; SA-516, Grade 70 with Stainless Steel Cladding A-8 Analysis
Shells	SA-240 and SA-312, Grade TP304
Auxiliary Pressure Vessels, Tanks, Filters, etc.	
Shells and heads	SA-351, Grade CF8A; SA-240, Type 304; SA-264 Clad Plate of SA-537, Class 1 with SA-240, Type 304 Clad and Stainless Steel Weld Overlay A-8 Analysis
Flanges and nozzles	SA-182, Grade F304; SA-350, Grade LF2 with SA-240, Type 304 and Stainless Steel Weld Overlay A-8 Analysis
Piping	SA-312 and SA-240, TP304 or TP316 Seamless
Pipe fittings	SA-403, Grade WP304 Seamless
Closure bolting and nuts	SA-193, Grade B7; SA-194, Grade 2H

Auxiliary Pumps

Pump casing and heads	SA-351, Grade CF8 or CF8M; SA-182, Grade F304 or F316
Flanges and nozzles	SA-182, Grade F304 or F316; SA-403, Grade WP316L Seamless
Piping	SA-312, Grade TP304 or TP316 Seamless
Stuffing or packing box cover	SA-351, Grade CF8 or CF8M; SA-240, Type 304 or Type 316; SA-182, Grade F304 or F316
Pipe fittings	SA-403, Grade WP316L Seamless; SA-213, Grade TP304, TP304L, TP316 or TP316L
Closure bolting and nuts	SA-193 Grade B6, B7 or B8M; SA-194, Grade 2H or 8M; SA-453, Grade 660; and Nuts SA-194, Grade 2H; 6, 7 and 8M

Table 6.1(N)-2 PROTECTIVE COATINGS ON WESTINGHOUSE SUPPLIED EQUIPMENT INSIDE CONTAINMENT

Component	Painted Surface Area (ft^2)
RCS Component Supports	11,230
Reactor coolant pump assemblies	4,048
Accumulator tanks	5,400
Manipulator crane	2,600
Other refueling equipment	2,125
Remaining equipment (such as valves, auxiliary tanks and heat exchanger supports, transmitters, alarm horns, small instruments)	<1,300

Table 6.2-1 GENERAL INFORMATION AND INITIAL CONDITIONS

I.	General Information, Containment	
	Design Pressure, psig	52.0/-3.5
	Design Temperature, °F	296
	C. Free Volume, ft^3	2.704×10^6
	D. Design Leak Rate, % mass/day	0.15
II.	Initial Conditions	
	A. Reactor Coolant System	
	1. Reactor Power Level, Mw(t)	3652.8
	2. Average Coolant Temperature, °F	592.7
	3. Mass of Reactor Coolant System Liquid, lbm	492,269
	4. Mass of Reactor Coolant System Steam, lbm	12,370
	5. Liquid Plus Steam Energy, Btu	302.3×10^6
	B. Containment	
	1. Pressure, psig	1.5
	2. Inside Temperature, °F	120
	3. Outside Temperature, °F	110
	4. Relative Humidity, %	1
	5. Service Water Temperature, °F **	65
	6. Refueling Water Temperature, °F	98
	7. Spray Water Temperature, °F	100
	C. Stored Liquid	
	1. Refueling Water Storage Tank *, gal	350,000 min.
	2. Total Free Volume, Four Accumulators	3,800 nominal
	3. Spray Additive Tank, gal	10,700

** System analysis has been performed to permit plant operation up to a maximum ocean temperature of 68.5°F to accommodate occasional summer ocean temperature excursions.

* 475,000 gal maximum capacity

Table 6.2-2 ENGINEERED SAFETY FEATURE SYSTEMS INFORMATION

	Design Capacity	Values Used for Containment Analysis
A. Passive Safety Injection System		
1. Number of Accumulators (Safety Injection Tanks)	4	4
2. Pressure Set Point, psig	600	600
B. Active Safety Injection Systems		
1. Charging Pumps		
a. Number of Lines	2	1 (Min. SI), 2 (Max. SI)
b. Number of Pumps	2	1 (Min. SI), 2 (Max. SI)
c. Flow Rate per Pump, gpm	150 @ 2,518 psi	450 (Injection) 0 (Recirculation)
2. High Pressure Safety Injection		
a. Number of Lines	2	1 (Min. SI), 2 (Max. SI)
b. Number of Pumps	2	1 (Min. SI), 2 (Max. SI)
c. Flow Rate per Pump, gpm	440 @ 2,680 ft TDH	450 (Injection) 0 (Recirculation)
3. Low Pressure Safety Injection		
a. Number of Lines	2	1 (Min. SI), 2 (Max. SI)
b. Number of Pumps	2	1 (Min. SI), 2 (Max. SI)
c. Flow Rate per Pump, gpm	3,000 @ 375 ft TDH	4,000 (Injection) 3,000 (Recirculation)
4. Containment Spray System		
a. Number of Lines	2	1
b. Number of Pumps	2	1
c. Number of Headers	2	1
d. Flow Rate per pump, gpm	3,010 @ 550 ft TDH	2,808
5. Heat Exchangers		
a. Containment Spray Heat Exchanger		
(1) Type	Shell and Tube	

	Design Capacity	Values Used for Containment Analysis
(2) Number of Units	2	1
(3) Heat Transfer Area/Unit, ft^2	3,468	3,468
(4) Overall Heat Transfer Coefficient, Btu/hr - ft^2 - °F		(431 service)
(5) Flow Rates/Unit, gpm		
(a) Recirculation (Tube) Side		2,808
(b) Exterior (Shell) Side		4,800
(6) Source of Cooling Water	Component Cooling Water	
(7) Time of Recirculation, sec.	2755 (Min. SI)	1688 (Max. SI)
b. Residual Heat Removal Heat Exchanger		
(1) Type	Shell and Tube	
(2) Number of Units	2	1 (Min. SI)
(3) Heat Transfer Area/Unit, ft^2	5444	5444
(4) Overall Heat Transfer Coefficient, Btu/hr - ft^2-°F		385 (Service)
(5) Flow Rates/Units, gpm		
(a) Recirculation (Tube) Side		3,000
(b) Exterior (Shell) Side		5,000
(6) Source of Cooling Water	Component Cooling Water	
(7) Time of Recirculation, sec.	2755 (Min. SI)	1688 (Max. SI)
c. Component Cooling Water Heat Exchanger		
(1) Type	Shell and Tube	

	Design Capacity	Values Used for Containment Analysis
(2) Number of Units	2	1 (Min. SI)
(3) Heat Transfer Area/Unit, ft^2	24,444	24,444
(4) Overall Heat Transfer Coefficient Btu/hr - ft^2 - °F		539
(5) Flow Rates/Unit, gpm		
(a) Component Cooling Water(Shell) Side		11,727
(b) Station Service Water (Tube) Side	8,000 (Ocean) 11,000 (Tower)	7,500 (ocean) 9,851 (Tower)
(6) Source of Cooling Water	Station Service Water	
(7) Time of Recirculation, sec	2755 (Min. SI)	1688 (Max. SI)

Table 6.2-3 CONTAINMENT PASSIVE HEAT SINK DATA

Heat Sink	Material	One Side Exposed Area(ft^2)	Thickness (in)	Volume (ft3)	Sides Exposed
1. Concrete Cylinder	Steel-lined	63,774			one
	Concrete		0.018	1,993	
	Paint		0.375	286,983	
	Carbon Steel		0.625		
	Air Gap		54.0		
	Concrete				
2. Containment Dome	Steel-lined	30,788			one
	Concrete		0.018		
	Paint		0.50	1,282	
	Carbon Steel		0.0625		
	Air Gap		42.0	107,723	
	Concrete				
3. Miscellaneous	Painted Concrete	48,257			both
	Paint		0.059		
	Concrete		53.52	215,226	
	Paint		0.059		
4. Refueling Canal Floor	SS-lined Concrete	1,152			both
	Stainless Steel		0.25	24	
	Air Gap		0.0625		
	Concrete		18.0	1,728	
5. Refueling Canal	SS-lined Concrete	6,005			both
	Stainless Steel		0.1875	94	
	Air Gap		0.0625		
	Concrete		36.0	18,014	
6. Conduit	Galvanized Steel	11,728	0.154	150.5	one
7. Ducts & Trays	Galvanized Steel	55,927	0.0729	340	one
8. Structural Steel	Painted Concrete	32,344			both
	Paint		0.018		
	Steel		0.558	1,503	
	Paint		0.018		
9. Polar Crane, Equipment Hatch, Personnel Hatch	Painted Steel	23,529			one
	Paint		0.018		
	Steel		0.736	1,443	

Heat Sink	Material	One Side Exposed Area(ft^2)	Thickness (in)	Volume (ft3)	Sides Exposed
10. Equipment Steel	Painted Steel	2,345			one
	Paint		0.018		
	Steel		1.55	303	
11. Containment Floor and Sump	Painted Steel	11,639			one
	Paint		0.009		
	Concrete		47.43	46,003	
	Steel		0.25	243	
	Air Gap		0.0625		
	Concrete		120.0	116,390	

TABLE 6.2-4 PASSIVE HEAT SINK MATERIAL PROPERTIES

Material	Thermal Conductivity (Btu/hr-ft-°F)	Volumetric Heat Capacity (Btu/ft^3-°F)
Paint	0.88	24.12
Carbon Steel	27.0	58.8
Stainless Steel	10.0	56.0
Air Gap	0.0184	0.0173
Concrete	0.92	22.62

TABLE 6.2-5 BREAK LOCATIONS POSTULATED FOR LOSS-OF-COOLANT ACCIDENT ANALYSIS

Code No.	Break Location
1	Pump Suction
2	Cold Leg
3	Hot Leg

TABLE 6.2-6 SPECTRUM OF BREAKS POSTULATED FOR LOSS-OF-COOLANT ACCIDENT ANALYSIS

Code No.	Break Type and Size
1	Full Double-Ended Guillotine Rupture
2	Small Double-Ended Guillotine Rupture (0.6 of Full Size for Break at Pump Suction)
3	Split Rupture (3 ft^2 for Break at Pump Suction)

TABLE 6.2-7 SINGLE ACTIVE FAILURES POSTULATED FOR LOSS-OF-COOLANT ACCIDENT ANALYSIS

Code No.	SAF
1	Failure of One Diesel Generator (Minimum Safety Injection)
2	Failure of One Diesel Generator at Time of Containment Spray Actuation (Maximum Safety Injection)

TABLE 6.2-8 CALCULATED PEAK CONTAINMENT PRESSURE AND PEAK CONTAINMENT TEMPERATURE FOLLOWING LOSS-OF-COOLANT ACCIDENTS

Case	Accident Conditions	Peak Pressure (psig)	Time of Peak Pressure (sec)	Peak Temperature (°F)	Time of Peak Temperature (sec)	Energy Released to Containment Up To End of Blowdown (10^6 Btu)
1.1.1	Full DE Pump Suction Guillotine (Min. SI)	49.2	3,601	272	3,613	311.0
1.1.2	Full DE Pump Suction Guillotine (Max. SI)	49.6	3,603	273	3,614	311.0
1.2.1	0.6 DE Pump Suction Guillotine (Min. SI)	49.2	3,604	272	3,616	307.6
1.3.1	3 ft^2 Pump Suction Split (Min. SI)	35.6	33	251	32	306.9
2.1.1	Full DE Cold-Leg Guillotine (Min. SI)	36.6	18	254	18	305.9
3.1.1	Full DE Hot-Leg Guillotine * (Min. SI)	37.5	20	256	22	311.8

* This case has been analyzed for the blowdown period only.

Note: This table presents results related to the long-term LOCA containment response analysis of record. Section 6.2.1.8 contains a discussion of the results of this analysis of record, as compared with the long-term LOCA containment response results at an analyzed core power level of 3659 MWt.

TABLE 6.2-9 LOSS-OF-COOLANT ACCIDENT CHRONOLOGY FOR VARIOUS BREAK LOCATIONS

	Time (sec)		
Event	Case 1.1.2	Case 2.1.1	Case 3.1.1 *
Pipe Rupture	0.0	0.0	0.0
Assumed Initiation of ECCS	10.0	10.0	10.0
Peak Containment Pressure During Blowdown	21.0	17.0	19.5
End of Blowdown	24.2	22.0	21.0
Beginning of Containment Spray	65.0	65.0	65.0
End of Reflood	155.1	212.1	-
End of Broken-Loop Steam Generator Energy Release	678.0	-	-
Peak Containment Pressure After Blowdown and Before Circulation	695.0	215.0	-
End of Injection and Beginning of Recirculation (350,000 gal. RWST Water Injected)	1688.0	2755.0	2755.0
Peak Containment Pressure During Recirculation	3603.0	6000.0	-
Containment Pressure at 50% of Design Value	28000.0	19000.0	-

* This case has been analyzed for the blowdown period only.

Note: This table presents results related to the long-term LOCA containment response analysis of record. Section 6.2.1.8 contains a discussion of the results of this analysis of record, as compared with the long-term LOCA containment response results at an analyzed core power level of 3659 MWt.

6.2-10 INITIAL PLANT OPERATING POWER LEVELS POSTULATED FOR MAIN STEAM LINE BREAK ANALYSIS

Code No.	Power Level
1	102%
2	75%
3	50%
4	25%
5	0% (Hot Shutdown)

6.2-11 SPECTRUM OF RUPTURES POSTULATED FOR MAIN STEAM LINE BREAK ANALYSIS

Code No.	Break Type and Size	
1	Full Double-Ended Guillotine Rupture	
2	Small Double-Ended Guillotine Rupture*	
	Power Level	Break Size (sq..ft.)
	102%	0.60
	75%	0.55
	50%	0.45
	25%	0.33
	0%	0.20
3	Split Rupture	
	Power Level	Break Size (sq. ft.)
	102%	0.80
	75%	0.84
	50%	0.80
	25%	0.660
	0%	0.40
4	Additional Small DE Guillotine Rupture *	
	(0.25 ft^2 for 75% and 0.10 ft^2 for 0% only.)	

* Area given is for each of forward flow and reverse flow.

TABLE 6.2-12 SINGLE FAILURES POSTULATED FOR MAIN STEAM LINE BREAK ANALYSIS

Code No.	Single Failure
1	Failure of one Feedwater Isolation Valve (FWIV) to Close
2	Failure of Broken-Loop Main Steam Isolation Valve (MSIV) to Close
3	Failure of One Feedwater Control Valve (FCV) to Close
4	Failure of One Main Feedwater Pump Trip (MFPT)
5	Failure of Broken-Loop Emergency Feedwater Pump Runout Control (EFPRC)
6	Failure of One Containment Spray Train

TABLE 6.2-13 CALCULATED PEAK CONTAINMENT PRESSURE AND PEAK CONTAINMENT TEMPERATURE FOLLOWING FULL DOUBLE-ENDED GUILLOTINE RUPTURE IN MAIN STEAM LINE

Case [+]	Peak Pressure (psig)	Time of Peak Pressure [*] (sec)	Peak Temperature (°F)	Time of Peak Temperature (sec)	Total Energy Release to Containment (10^6 Btu)
1.1.2	33.6	173	364	82	324.72
1.1.6	32.9	173	360	98	301.77
5.1.6	36.1	281	349	112	345.13

[+] The first digit refers to the power levels listed in Table 6.2-10, the second digit is the break spectrum in Table 6.2-11, and the third digit is the single failure in Table 6.2-12.

[*] Same as steam generator dryout time in these cases.

Note: This table presents results related to the MSLB containment response analysis of record. Section 6.2.1.8 contains a discussion of the results of this analysis of record, as compared with the MSLB containment response results at an analyzed core power level of 3659 MWt.

TABLE 6.2-14 CALCULATED PEAK CONTAINMENT PRESSURE AND PEAK CONTAINMENT TEMPERATURE FOLLOWING SMALL DOUBLE-ENDED GUILLOTINE RUPTURES IN MAIN STEAM LINE

Case [+]	Peak Pressure (psig)	Time of Peak Pressure (sec)	Peak Temperature (°F)	Time of Peak Temperature (sec)	Total Energy Release to Containment (10^6 Btu)
5.2.6	28.8	1460[*]	317	612	332.92
5.4.5	20.6	1165	306	1165	445.50
5.4.6	23.0	2435*	305	1260	291.62

[+] The first digit refers to the power levels listed in Table 6.2-10, the second digit is the break spectrum in Table 6.2-11, and the third digit is the single active failure in Table 6.2-12.

[*] Steam generator dryout time.

Note: This table presents results related to the MSLB containment response analysis of record. Section 6.2.1.8 contains a discussion of the results of this analysis of record, as compared with the MSLB containment response results at an analyzed core power level of 3659 MWt.

TABLE 6.2-15 CALCULATED PEAK CONTAINMENT PRESSURE AND PEAK CONTAINMENT TEMPERATURE FOLLOWING RUPTURES IN MAIN STEAM LINE

Case [+]	Peak Pressure (psig)	Time of Peak Pressure [*] (sec)	Peak Temperature (°F)	Time of Peak Temperature (sec)	Total Energy Release to Containment (10^6 Btu)
4.3.6	34.7	353*	349	144	340.57

[+] The first digit refers to the power levels listed in Table 6.2-10, the second digit is the break spectrum in Table 6.2-11, and the third digit is the single active failure in Table 6.2-12.

[*] Steam generator dryout time.

Note: This table presents results related to the MSLB containment response analysis of record. Section 6.2.1.8 contains a discussion of the results of this analysis of record, as compared with the MSLB containment response results at an analyzed core power level of 3659 MWt.

Table 6.2-16 POSTULATED BREAKS FOR SUBCOMPARTMENT ANALYSIS

Containment Subcompartment	Postulated Break	Break Location
Pressurizer Compartment	Full double-ended guillotine spray line rupture	EL 12'-0"; EL 24-6" EL 34'-0"; EL 45'-0" EL 54'-0 5/8"
Pressurizer Skirt Cavity	Full double-ended guillotine surge line rupture	Pressurizer surge line nozzle

Table 6.2-30 MASS AND ENERGY RELEASE RATES FOLLOWING SPRAY LINE RUPTURE

Time (sec)	Mass Rate (lb/sec)	Enthalpy (Btu/lb)
0.00000	0.0	611.71
.00502	5756.7	611.71
.01002	5615.6	611.65
.02003	6046.9	607.30
.03004	6377.2	604.57
.04002	6514.4	603.09
.05005	6255.2	603.74
.06003	6325.0	602.99
.07006	6345.5	602.60
.08003	6287.2	602.63
.09001	6040.9	603.77
.10002	6273.6	602.47
.11510	6520.5	601.18
.20010	6057.1	603.29
.30004	5925.2	604.01
.34000	5884.1	604.24
.35027	5901.4	604.12
.37001	5858.6	604.35
.38001	5828.3	604.53

Time (sec)	Mass Rate (lb/sec)	Enthalpy (Btu/lb)
.40002	5902.6	604.07
.41010	5928.7	603.90
.43002	5845.8	604.38
.45755	5785.9	604.73
.47751	5795.2	604.65
.51009	5749.2	604.88
.55000	5797.0	604.52
.65003	5717.6	604.86
.70010	5736.6	604.64
.81021	5684.6	604.78
.85000	5699.4	604.60
.90008	5683.0	604.62
.94003	5662.9	604.68
1.00005	5671.7	604.51
.00000	5535.8	604.06

Break Type : Full Double-Ended Spray Line
Break Location: See Notes

VENT PATH NO.	Vol. Node No.		AREA (ft^2)	$\frac{L}{A}$ Ratio (1/ft)	HEAD LOSS, K				
	From	To			FRICTION K, fL/d	TURNING AND OBSTRUCTION LOSS, K	EXPANSION K	CONTRACTION K	TOTAL
1	1	2	139.40	.05	.150		.010	.020	.180
2	1	23	92.00	.05	.057		1.0	.300	1.357
3	2	3	21.50	.20	.110		.130	.310	.550
					(.110)		(.390)	(.180)	(.680)
4	2	4	8.20	.35	.030		.110	.310	.450
					(.030)		(.390)	(.180)	(.600)
5	2	5	10.67	.46	.060		.110	.310	.480
					(.060)		(.390)	(.180)	(.630)
6	2	6	4.92	1.20	.130		.110	.310	.550
					(.130)		(.390)	(.180)	(.700)
7	2	7	4.81	1.20	.130		.110	.310	.550
					(.130)		(.390)	(.180)	(.700)
8	2	8	4.92	1.21	.130		.110	.310	.550
					(.130)		(.390)	(.180)	(.700)
9	2	23	18.90	.50	.050		1.0	.500	1.550

Break Type : Full Double-Ended Spray Line
Break Location: See Notes

VENT PATH NO.	Vol. Node No.		AREA (ft^2)	$\frac{L}{A}$ Ratio (1/ft)	HEAD LOSS, K				
10	3	4	70.70	.12	.600		7.730	.190	8.520
11	3	8	13.58	.38	.080	.110		.300	.490
12	3	9	37.00	.34	.160				.160
13	4	5	69.75	.10	.210			1.710	1.920
14	4	10	19.60	.64	.050				.050
15	5	6	12.36	.42	.080	.110		.300	.490
16	5	11	14.70	.86	.080				.080
17	6	7	12.36	.39	.080	.110			.190
18	6	12	5.32	2.35	.170				.170
19	7	8	13.69	.35	.080	.110			.190
20	7	13	5.32	2.35	.170				.170
21	8	14	5.32	2.37	.170				.170
22	9	10	71.22	.12	.600		7.73	.190	8.520
23	9	14	13.56	.38	.080	.110		.300	.490
24	9	15	9.43	.33	.110			.370	.480
					(.110)		(.550)	(0.0)	(.660)

Break Type : Full Double-Ended Spray Line
Break Location: See Notes

VENT PATH NO.	Vol. Node No.		AREA (ft^2)	$\frac{L}{A}$ Ratio (1/ft)	HEAD LOSS, K				
25	10	11	71.22	.10	.210			1.710	1.920
26	10	15	2.90	.84	.050			.430	.480
					(.050)		(.740)	(0.0)	(.790)
27	11	12	13.56	.38	.080	.110		.300	.490
28	11	16	8.13	.51	.060			.220	.280
					(.060)		(.200)	(0.0)	(.260)
29	12	13	13.56	.35	.080	.110			.19
					(.110)		(0.0)	(.050)	(.160)
30	12	16	5.32	1.25	.110	.010			.120
31	13	14	13.56	.35	.080	.110			.190
32	13	16	5.32	1.25	.110		.010		.120
					(.110)		(0.0)	(.050)	(.160)
33	14	15	5.32	1.27	.110		.010		.120
					(.110)		(0.0)	(.050)	(.160)
34	15	16	8.66	1.66	.636	.424	.880	.770	2.710
35	15	17	18.02	.20	.070		.540	.310	.920

Break Type : Full Double-Ended Spray Line
Break Location: See Notes

VENT PATH NO.	Vol. Node No.		AREA (ft^2)	$\frac{L}{A}$ Ratio (1/ft)	HEAD LOSS, K				
36	16	18	19.43	.15	.050		1.320	.270	1.640
37	17	18	29.80	.37	2.088	1.392	4.120	3.760	11.360
38*[*]	17	19	1.20	.50	.050		.620	.170	.840
39*	18	20	12.30	.50	.050		.800	.410	1.260
40*	18	23	10.80	1.40	1.910		1.0	.400	3.310
41	19	20	37.90	.33	.120		.420	.470	1.010
42	19	21	91.60	.09	.040				.040
43	20	22	47.70	.17	.100		.060	.120	.280
44	20	23	114.50	.17	.040		1.0		1.040
45	21	22	45.80	.33	.120		.420	.470	1.010
46	22	23	119.10	.17	.040		1.0		1.040

[*] PRESSURE DEPENDENT AREAS.

TABLE 6.2-32 PRESSURIZER COMPARTMENT NODAL DESCRIPTION AND PEAK NODAL DIFFERENTIAL PRESSURE

Break Type : Full Double-Ended Spray Line
Break Location: See Notes

				Initial Conditions				Design	
Node Volume No. ( )	Description	Height (ft)	Volume (ft^3)	Temperature (°F)	Pressure (lb/in^2)(a)	Relative Humidity %	Calculated Peak Pressure Differential (lb/in^2(g))	Peak Pressure Differential (lb/in^2(g))	Margin %
1	Bounded by El.56'-6"-6 $\frac{11}{16}$" and El.63'-0"	6.44	902.1	120	15.2	90	5.37[1]	6.5	21.0
2	Bounded by El.50'-1 $\frac{7}{16}$" and El.56'-6 $\frac{11}{16}$"	6.44	719.0	120	15.2	90	7.48[1]	7.5	0.3
REGION BETWEEN EL.37'-6¾" AND EL.50'-1									
3	Bounded by Azimuth 60° and 150°	12.56	457.7	120	15.2	90	16.18[2]	18.5	14.3
4	Azimuth 150° and 180°	12.56	243.1	120	15.2	90	13.96[3]	18.5	32.5
5	Azimuth 180° and 240°	12.56	184.4	120	15.2	90	13.82[3]	18.5	33.9

Break Type : Full Double-Ended Spray Line
Break Location: See Notes

				Initial Conditions				Design	
6	Azimuth 240° and 300°	12.56	67.3	120	15.2	90	13.48[3]	18.5	37.2
7	Azimuth 300° and 360°	12.56	67.3	120	15.2	90	13.48[3]	18.5	37.2
8	Azimuth 0° and 60°	12.56	66.6	120	15.2	90	13.65[3]	18.5	35.5
REGION BETWEEN EL.25'-0" AND 37'-6¾"									
	Bounded by:								
9	Azimuth 60° and 150°	12.56	465.3	120	15.2	90	18.47[3]	21.5	16.4
10	Azimuth 150° and 180°	12.56	246.5	120	15.2	90	14.98[3]	21.5	43.5
11	Azimuth 180° and 240°	12.56	184.6	120	15.2	90	14.57[3]	21.5	47.6
12	Azimuth 240° and 300°	12.56	66.8	120	15.2	90	14.23[3]	21.5	51.1
13	Azimuth 300° and 360°	12.56	66.8	120	15.2	90	14.42[3]	21.5	49.1
14	Azimuth 0° and 60°	12.46	66.8	120	15.2	90	15.14[3]	21.5	42

Break Type : Full Double-Ended Spray Line
Break Location: See Notes

				Initial Conditions				Design	
REGION BETWEEN EL.22'-0" AND EL.25'-0"									
	Bounded by:								
15	Azimuth 0° and 180°	3.00	54.1	120	15.2	90	47.74[4]	50	5
16	Azimuth 180° and 360°	3.00	58.3	120	15.2	90	13.44[3]	25	86
REGION BETWEEN EL.16'-6" AND EL.22'-0"									
	Bounded by:								
17	Azimuth 0° and 180°	5.50	141.8	120	15.2	90	25.19[4]	25	0
18	Azimuth 180° and 360°	5.50	245.2	120	15.2	90	11.53[4]	25	117
REGION BETWEEN EL.8'-3" AND EL.16'-6"									
	Bounded by:								
19	Azimuth 0° and 180°	8.2	670.0	120	15.2	90	16.08[5]	25	55
20	Azimuth 180° and 360°	8.2	400.0	120	15.2	90	5.32[5]	25	370

Break Type : Full Double-Ended Spray Line
Break Location: See Notes

				Initial Conditions				Design	
REGION BETWEEN EL.0'-0" AND EL.8'-3"									
21	Bounded by: Azimuth 0° and 180°	8.25	746.0	120	15.2	90	15.25[5]	25	64
22	Azimuth 180° and 360°	8.25	518.0	120	15.2	90	7.71[5]	25	224
23	Containment		2.71×10^6	120	15.2	90	-		-

NOTES:

1 .Peak differential pressure occurs following a postulated rupture of the spray line at elevation 54'-0".
2. Peak differential pressure occurs following a postulated rupture of the spray line at elevation 45'-0".
3. Peak differential pressure occurs following a postulated rupture of the spray line at elevation 34'-0".
4. Peak differential pressure occurs following a postulated rupture of the spray line at elevation 24'-6".
5. Peak differential pressure occurs following a postulated rupture of the spray line at elevation 12'-0".

TABLE 6.2-33 MASS AND ENERGY RELEASE RATES SURGE LINE DOUBLE-ENDED GUILLOTINE

Time (sec)	Mass Rate (lb/sec)	Enthalpy (Btu/lb)
0.0	0.0	705.37
.001	8.66lE3	705.37
.01011	1.365E4	705.19
.01501	1.468E4	705.07
.02011	1.522E4	704.89
.02511	1.544E4	704.68
.03007	1.546E4	704.43
.03513	1.536E4	704.15
.04012	1.519E4	703.88
.045	1.498E4	703.64
.05012	1.475E4	703.44
.05513	1.453E4	703.3
.06011	1.433E4	703.24
.0651	1.417E4	703.24
.07009	1.403E4	703.29
.07506	1.394E4	703.37
.08008	1.389E4	703.46
.08525	1.386E4	703.54
.09013	1.385E4	703.6
.0951	1.386E4	703.63
.10009	1.388E4	703.63
.15005	1.382E4	703.04
.20014	1.348E4	701.91

TABLE 6.2-34 PRESSURIZER SKIRT CAVITY VENT PATH DESCRIPTION

Break Type: Full Double-Ended Surge Line
Break Location: Node #6

VENT PATH NO.	VOL. NODE NO.		AREA (ft^2)	$\frac{L}{A}$ Ratio (1/ft)	HEAD LOSS, K				
	From	To			FRICTION K, $\frac{fL}{d}$	TURNING AND OBSTRUCTION LOSS, K	EXPANSION K	CONTRACTION K	TOTAL
	1	2	21.75	.323			.421		.421
	1	6	22.86	.213				.127	.129
	2	3	13.93	.504	.064			.402	.466
	2	4	12.17	.209	.017		.56	.41	.987
	2	5	193.7	.033			.528		.528
	3	5	13.93	.47	.065		1.0		1.065
	4	5	30.4	.263			1.0		1.000
	5	6	.26	.2					1.770*

* Corresponds to an orifice coefficient = 0.6

TABLE 6.2-35 PRESSURIZER SKIRT CAVITY NODAL DESCRIPTION

Break Type: Full Double-Ended Surge Line
Break Location: Node #6

Node Volume No.( )	Description	Height (ft)	Volume (ft^3)	Initial Conditions			Calculated Peak Pressure Differential ($lb/in^2(g)$)	Design	
				Temperature (°F)	Pressure	Relative Humidity %		Peak Pressure Differential	Margin %
1	Volume from El.(-) 5'-11" to 0'-0"		128.7	120	15.2	90	186.4	N/A	N/A
2	Volume from El.26'-0" to (-)5'-11"		1262.8	120	15.2	90	83	N/A	N/A
3	Volume northeast of the skirt cavity at El.(-) 12'-0"		181.1	120	15.2	90	6.5	N/A	N/A
4	Volume southeast of the skirt cavity at El.(-) 12'-0"		121.6	120	15.2	90	5.8	N/A	N/A
5	Containment		$2.7x10^6$	120	15.2	90	-	N/A	N/A
6	Volume under pressurizer vessel up to El.0'-0"		166.0	120	15.2	90	190.8	N/A	N/A

CASES ANALYZED AND TABLES WITH RESULTS

	Case	Blowdown	Reflood	Post-Reflood	Balance Mass	Balance Energy
A	Double-Ended Pump Suction Min. S.I.	6.2-38	6.2-43	6.2-48	6.2-51	6.2-57
B	Double-Ended Pump Suction Max. S.I.	6.2-37	6.2-44	6.2-49	6.2-52	6.2-58
C	0.6 Doubled-Ended Pump Suction Min. S.I.	6.2-39	6.2-45	6.2-50	6.2-53	6.2-59
D	Three Square Foot Pump Suction Split Min. S.I.	6.2-40	6.2-46	6.2-46	6.2-54	6.2-60
E	Double-Ended Hot Leg Min. S.I.	6.2-41	-	-	6.2-55	6.2-61
F	Double-Ended Cold Leg Min. S.I.	6.2-42	6.2-47	6.2-47	6.2-56	6.2-62

NOTES:

1 Table 6.2-38 is a duplicate of 6.2-37. It is provided for continuity only. Safety injection has no effect on the blowdown portion of the transient.

2 Double Ended refers to the size of break. A "0.6" Double Ended Break is a guillotine break with a break equal to 60 percent of the double pipe area.

TABLE 6.2-37 DOUBLE-ENDED PUMP SUCTION GUILLOTINE (MAXIMUM SAFETY INJECTION) BLOWDOWN MASS AND ENERGY RELEASES

	BREAK PATH NO. 1 FLOW		BREAK PATH NO. 2 FLOW	
TIME SECONDS	LBM/SEC	THOUSAND BTU/SEC	LBM/SEC	THOUSAND BTU/SEC
0.00	0.0	0.0	0.0	0.0
.100	41585.6	23222.0	22323.9	12416.9
.201	42362.9	23834.2	24356.8	13556.8
.400	44284.6	25474.7	23645.2	13186.6
.601	44898.0	26473.8	21180.8	11822.1
.901	41387.1	25100.8	19367.0	10821.4
1.20	38232.0	23606.1	18928.0	10580.4
1.70	34320.6	21965.3	18905.3	10569.0
2.30	28812.4	19267.6	18555.8	10385.2
2.70	25338.9	17319.1	18824.2	10551.4
3.00	21136.7	14640.7	18262.6	10247.8
3.80	16809.7	11759.4	16575.7	9325.8
4.40	14536.5	10187.2	15689.3	8838.8
4.60	14136.0	9904.1	16858.6	9505.1
5.60	12420.5	8712.2	16234.2	9146.6
6.20	11982.8	8392.7	15921.2	8969.6
9.00	9684.1	6920.5	13988.9	7873.7
9.40	9877.1	7295.9	13944.1	7847.8
9.80	7860.5	6752.3	13413.0	7545.2
11.2	7195.3	5955.9	12055.2	6770.1
12.6	6392.5	5330.5	10878.9	6096.6
14.2	5270.8	4457.8	9458.3	5291.0
15.4	4624.5	4016.1	8372.2	4662.4
16.0	4276.8	3896.1	8226.6	4346.2
16.6	3798.5	3785.0	7662.0	3768.1
17.2	2917.2	3362.5	6194.4	2812.4
18.0	2096.5	2573.5	4799.2	1976.5
18.6	1633.2	2019.1	5400.4	2075.0
19.0	1355.9	1682.7	5037.7	1845.3
20.0	752.7	940.2	3059.0	969.9
21.0	338.0	423.7	67.7	19.5
22.4	257.7	323.5	0.0	0.0
22.6	224.5	282.0	23247.9	6138.9

Note: This table presents mass and/or energy release data related to the long-term LOCA containment response analysis of record. Section 6.2.1.8 contains a discussion of the mass and energy release data associated with this analysis of record, as compared with the mass and energy release data associated with the long-term LOCA containment response at an analyzed core power level of 3659 MWt.

	BREAK PATH NO. 1 FLOW		BREAK PATH NO. 2 FLOW	
TIME SECONDS	LBM/SEC	THOUSAND BTU/SEC	LBM/SEC	THOUSAND BTU/SEC
22.8	218.1	274.0	0.0	0.0
24.2	0.0	0.0	0.0	0.0

Note: This table presents mass and/or energy release data related to the long-term LOCA containment response analysis of record. Section 6.2.1.8 contains a discussion of the mass and energy release data associated with this analysis of record, as compared with the mass and energy release data associated with the long-term LOCA containment response at an analyzed core power level of 3659 MWt.

[1]TABLE 6.2-38 DOUBLE-ENDED PUMP SUCTION GUILLOTINE (MINIMUM SAFETY INJECTION) BLOWDOWN MASS AND ENERGY RELEASES

	BREAK PATH NO.1 FLOW		BREAK PATH NO.2 FLOW	
TIME SECONDS	LBM/SEC	THOUSAND BTU/SEC	LBM/SEC	THOUSAND BTU/SEC
0.000	0.0	0.0	0.0	0.0
.100	41585.6	23222.0	22323.9	12416.9
.201	42362.9	23834.2	24356.8	13556.8
.400	44284.6	25474.7	23645.2	13186.6
.601	44898.0	26473.8	21180.8	11822.1
.901	41387.1	25100.8	19367.0	10821.4
1.20	38232.0	23606.1	18928.0	10580.4
1.70	34320.6	21965.3	18905.3	10569.0
2.30	28812.4	19267.6	18555.8	10385.2
2.70	25338.9	17319.1	18824.2	10551.4
3.00	21136.7	14640.7	18262.6	10247.8
3.80	16809.7	11759.4	16575.7	9325.8
4.40	14536.5	10187.2	15689.3	8838.8
4.60	14136.0	9904.1	16858.6	9505.1
5.60	12420.5	8712.2	16234.2	9146.6
6.20	11982.8	8392.7	15921.2	8969.6
9.00	9684.1	6920.5	13988.9	7873.7
9.40	9877.1	7295.9	13944.1	7847.8
9.80	7860.5	6752.3	13413.0	7545.2
11.2	7195.3	5955.9	12055.2	6770.1
12.6	6392.5	5330.5	10678.9	6096.6
14.2	5270.8	4457.8	9458.3	5291.0
15.4	4624.5	4016.1	8372.2	4662.4
16.0	4276.8	3896.1	8226.6	4346.2
16.6	3798.5	3785.0	7662.0	3768.1
17.2	2917.2	3362.5	6194.4	2812.4
18.0	2096.5	2573.5	4799.2	1976.0
18.6	1633.2	2019.1	5400.4	2075.0
19.0	1355.9	1682.7	5037.7	1845.0
20.0	752.7	940.2	3059.0	969.9
21.0	338.0	423.7	67.7	19.5

Note: This table presents mass and/or energy release data related to the long-term LOCA containment response analysis of record. Section 6.2.1.8 contains a discussion of the mass and energy release data associated with this analysis of record, as compared with the mass and energy release data associated with the long-term LOCA containment response at an analyzed core power level of 3659 MWt.

	BREAK PATH NO.1 FLOW		BREAK PATH NO.2 FLOW	
TIME SECONDS	LBM/SEC	THOUSAND BTU/SEC	LBM/SEC	THOUSAND BTU/SEC
22.4	257.7	323.5	0.0	0.0
22.6	224.5	282.0	23247.9	6138.9
22.8	218.1	274.0	0.0	0.0
24.2	0.0	0.0	0.0	0.0

Note: This table presents mass and/or energy release data related to the long-term LOCA containment response analysis of record. Section 6.2.1.8 contains a discussion of the mass and energy release data associated with this analysis of record, as compared with the mass and energy release data associated with the long-term LOCA containment response at an analyzed core power level of 3659 MWt.

TABLE 6.2-39 0.6 DOUBLE-ENDED PUMP SUCTION GUILLOTINE BLOWDOWN MASS AND ENERGY RELEASE

	BREAK PATH NO.1 FLOW		BREAK PATH NO.2 FLOW	
TIME SECONDS	LBM/SEC	THOUSAND BTU/SEC	LBM/SEC	THOUSAND BTU/SEC
0.000	0.0	0.0	0.0	0.0
.100	37543.2	20967.3	20214.7	11237.1
.201	37944.1	21308.4	21975.7	12225.4
.401	36638.0	20904.7	21828.7	12163.4
.700	33054.7	19396.9	19709.0	11000.9
1.00	29205.3	17472.1	18881.6	10546.6
1.30	28590.9	17281.0	18523.2	10348.9
1.80	27872.1	17065.2	18556.9	10369.9
2.40	25425.5	15927.1	18594.2	10403.9
2.60	24340.3	15406.0	19417.0	10873.5
3.00	22073.9	14311.3	19071.6	10693.9
4.20	15784.4	10768.9	16796.7	9450.3
4.80	13599.1	9382.0	15784.7	8891.4
5.20	12779.3	8831.1	15259.8	8598.8
5.40	12360.3	8537.3	16045.8	9047.2
5.80	11786.2	8140.7	16003.2	9020.3
6.60	11030.8	7652.3	15476.1	8722.3
7.20	10707.8	7427.5	15174.0	8555.3
8.80	9628.9	6747.4	14262.7	8045.8
10.0	9104.3	6657.1	13591.9	7667.0
10.4	7141.4	5960.4	13369.8	7542.4
11.0	6719.3	5667.2	12860.2	7254.0
12.4	6245.8	5141.1	11696.9	6590.9
13.4	5760.0	4782.4	10939.6	6158.4
15.4	4607.1	3914.9	9283.6	5223.1
17.2	3763.9	3443.8	7877.2	4395.5
17.8	3350.2	3288.6	7820.0	4113.4
18.6	2336.4	2719.4	6629.6	3083.0
19.6	1659.1	2042.2	5097.7	2117.1
20.2	1337.2	1656.2	5887.9	2305.3
20.8	1054.2	1312.7	4080.9	1518.5

Note: This table presents mass and/or energy release data related to the long-term LOCA containment response analysis of record. Section 6.2.1.8 contains a discussion of the mass and energy release data associated with this analysis of record, as compared with the mass and energy release data associated with the long-term LOCA containment response at an analyzed core power level of 3659 MWt.

	BREAK PATH NO.1 FLOW		BREAK PATH NO.2 FLOW	
TIME SECONDS	LBM/SEC	THOUSAND BTU/SEC	LBM/SEC	THOUSAND BTU/SEC
21.4	793.8	992.3	3612.4	1187.6
22.8	250.8	315.8	501.5	143.9
23.4	227.4	350.0	8.6	2.4
25.4	0.0	0.0	0.0	0.0

1

Note: This table presents mass and/or energy release data related to the long-term LOCA containment response analysis of record. Section 6.2.1.8 contains a discussion of the mass and energy release data associated with this analysis of record, as compared with the mass and energy release data associated with the long-term LOCA containment response at an analyzed core power level of 3659 MWt.

TABLE 6.2-40 THREE-FOOT SQUARED PUMP SUCTION SPLIT BLOWDOWN MASS AND ENERGY RELEASES

	BREAK PATH NO. 1 FLOW	
TIME SECONDS	LBM/SEC	THOUSAND BTU/SEC
0.000	0.0	0.0
.101	43200.0	24145.5
.301	42783.0	24131.5
.801	37700.1	21931.5
1.00	35905.1	21070.4
1.60	32918.7	19583.1
2.30	27472.4	16545.4
2.70	26963.0	16334.6
5.60	21735.5	13305.5
6.60	20831.6	12649.3
8.00	19175.3	11651.3
10.4	18279.7	11095.6
11.0	18588.4	11214.5
11.8	16835.9	10477.7
15.6	14537.2	9132.5
19.2	12060.2	7791.2
19.6	11802.9	7649.8
22.0	10229.8	6800.5
24.4	8417.9	5836.8
26.2	6696.8	5035.3
28.2	4227.0	3614.1
29.2	3443.9	2879.8
30.2	3043.1	2425.1
30.8	2476.7	1986.1
32.0	3360.7	1801.3
32.8	2831.4	1496.9
33.0	3522.0	1619.7
33.6	3227.6	1471.0
34.4	4423.5	1675.5
34.6	4552.6	1634.7
36.0	2084.9	700.7

Note: This table presents mass and/or energy release data related to the long-term LOCA containment response analysis of record. Section 6.2.1.8 contains a discussion of the mass and energy release data associated with this analysis of record, as compared with the mass and energy release data associated with the long-term LOCA containment response at an analyzed core power level of 3659 MWt.

BREAK PATH NO. 1 FLOW

TIME SECONDS	LBM/SEC	THOUSAND BTU/SEC
36.4	1762.9	602.4
36.6	1002.9	336.6
36.8	1110.8	396.7
37.2	0.0	0.0

Note: This table presents mass and/or energy release data related to the long-term LOCA containment response analysis of record. Section 6.2.1.8 contains a discussion of the mass and energy release data associated with this analysis of record, as compared with the mass and energy release data associated with the long-term LOCA containment response at an analyzed core power level of 3659 MWt.

TABLE 6.2-41 DOUBLE-ENDED HOT LEG GUILLOTINE BLOWDOWN MASS AND ENERGY RELEASES

	BREAK PATH NO.1 FLOW		BREAK PATH NO.2 FLOW	
TIME SECONDS	LBM/SEC	THOUSAND BTU/SEC	LBM/SEC	THOUSAND BTU/SEC
0.000	0.0	0.0	0.0	0.0
.100	42412.0	27585.7	26857.8	17356.3
.201	36857.8	24038.5	23284.6	14946.6
.301	36716.0	23961.5	20962.8	13271.1
.400	35842.5	23421.4	19773.5	12306.1
.600	34749.8	22805.0	18504.8	11159.1
.800	33776.8	22305.6	17743.6	10457.2
1.00	32541.3	21657.0	17433.2	10108.4
1.50	30093.3	20391.3	17866.4	10093.6
1.90	28232.4	19272.8	18090.5	10122.4
2.50	25753.2	17648.4	17757.9	9898.8
2.90	24401.8	16701.8	17349.0	9673.7
3.70	22280.4	15138.3	16388.6	9161.6
4.40	20976.4	14165.7	15338.1	8612.7
5.00	20574.8	13790.2	14392.2	8125.0
5.20	20586.1	13722.5	14353.9	8116.9
6.20	20286.9	13372.7	13168.3	7469.0
7.80	19363.8	12704.9	11142.1	6359.3
8.00	14861.3	10628.5	10887.7	6219.4
8.80	14379.7	10294.9	9891.5	5672.8
10.2	13371.4	9390.4	8200.0	4756.8
10.8	12710.4	8915.7	7477.7	4375.0
11.6	12053.0	8399.5	6581.5	3910.8
12.6	10953.0	7664.2	5594.4	3416.6
13.4	9880.5	7046.4	4931.1	3094.3
14.2	8707.2	6450.8	4369.5	2826.8
14.8	7604.6	5945.2	3991.6	2648.9
15.2	6516.0	5488.7	3717.0	2521.5
15.8	4549.6	4601.4	3218.8	2305.3
16.2	3592.6	3958.6	2828.8	2134.9
17.0	2419.4	2853.6	1901.9	1791.0

Note: This table presents mass and/or energy release data related to the long-term LOCA containment response analysis of record. Section 6.2.1.8 contains a discussion of the mass and energy release data associated with this analysis of record, as compared with the mass and energy release data associated with the long-term LOCA containment response at an analyzed core power level of 3659 MWt.

	BREAK PATH NO.1 FLOW		BREAK PATH NO.2 FLOW	
TIME SECONDS	LBM/SEC	THOUSAND BTU/SEC	LBM/SEC	THOUSAND BTU/SEC
17.8	1602.7	1940.9	1067.1	1304.1
19.0	1036.5	1268.7	542.1	673.1
20.4	303.3	353.9	242.4	303.3
21.0	0.0	0.0	0.0	0.0

Note: This table presents mass and/or energy release data related to the long-term LOCA containment response analysis of record. Section 6.2.1.8 contains a discussion of the mass and energy release data associated with this analysis of record, as compared with the mass and energy release data associated with the long-term LOCA containment response at an analyzed core power level of 3659 MWt.

TABLE 6.2-42 DOUBLE-ENDED COLD LEG GUILLOTINE BLOWDOWN MASS AND ENERGY RELEASES

	BREAK PATH NO.1 FLOW		BREAK PATH NO.2 FLOW		SI SPILL PATH FLOW	
TIME SECONDS	LBM/SEC	THOUSAND BTU/SEC	LBM/SEC	THOUSAND BTU/SEC	LBM/SEC	THOUSAND BTU/SEC
0.000	0.0	0.0	0.0	0.0	0.0	0.0
.100	25295.8	14098.9	54132.4	30247.2	4429.2	389.8
.201	23118.0	12892.3	60165.0	33618.5	4384.0	385.8
.401	23004.3	12839.9	59305.1	33129.2	4293.9	377.9
.901	22213.9	12526.9	54065.6	30190.6	4068.5	358.0
1.20	21352.5	12166.1	52444.1	29323.8	3933.5	346.1
1.50	20915.4	12052.1	49796.5	27885.8	3798.3	334.3
2.00	19832.2	11605.5	42660.9	23983.9	3572.7	314.4
2.20	17682.0	10389.3	40816.5	22980.5	3482.9	306.5
2.30	16563.3	9748.7	43663.7	24595.2	3463.0	304.7
2.40	15811.8	9320.4	37164.6	20951.3	3445.8	303.2
2.60	14854.2	8778.0	39095.1	22064.1	3411.2	300.2
2.80	14140.2	8372.4	35745.6	20192.2	3376.5	297.1
3.30	13004.1	7737.5	33471.6	18931.5	3290.1	289.5
3.70	12331.6	7389.3	28681.3	16221.2	3221.0	283.4

Note: This table presents mass and/or energy release data related to the long-term LOCA containment response analysis of record. Section 6.2.1.8 contains a discussion of the mass and energy release data associated with this analysis of record, as compared with the mass and energy release data associated with the long-term LOCA containment response at an analyzed core power level of 3659 MWt.

	BREAK PATH NO.1 FLOW		BREAK PATH NO.2 FLOW		SI SPILL PATH FLOW	
TIME SECONDS	LBM/SEC	THOUSAND BTU/SEC	LBM/SEC	THOUSAND BTU/SEC	LBM/SEC	THOUSAND BTU/SEC
3.90	12028.5	7246.4	27163.6	15356.4	3186.4	280.4
4.60	11000.3	6818.5	25391.6	14334.3	3055.6	268.9
6.00	8967.0	6022.2	23959.4	13546.2	2743.9	241.5
7.60	6796.1	5006.5	21012.0	12080.6	2547.5	224.2
8.80	6037.4	4350.0	18836.2	11072.6	2473.5	217.7
9.80	6077.5	4254.8	16674.0	10338.3	2316.1	203.8
10.2	6005.8	4468.8	14404.1	9361.3	2252.9	198.3
10.6	4750.8	4257.8	12026.7	8293.7	2189.8	192.7
11.2	4073.1	3795.5	9437.7	7068.3	2121.9	186.7
11.6	3887.8	3597.3	8317.5	6517.9	2114.0	186.0
13.8	2879.2	2879.0	5400.9	4716.3	2005.4	176.5
14.2	2658.9	2781.0	4022.0	4332.5	1953.6	186.0
15.0	1302.8	1577.4	3449.5	3296.8	1850.5	
16.2	919.6	1139.2	5502.0	2353.2	1799.6	
18.0	368.7	463.5	3956.5	1286.5	1756.5	

Note: This table presents mass and/or energy release data related to the long-term LOCA containment response analysis of record. Section 6.2.1.8 contains a discussion of the mass and energy release data associated with this analysis of record, as compared with the mass and energy release data associated with the long-term LOCA containment response at an analyzed core power level of 3659 MWt.

	BREAK PATH NO.1 FLOW		BREAK PATH NO.2 FLOW		SI SPILL PATH FLOW	
TIME SECONDS	LBM/SEC	THOUSAND BTU/SEC	LBM/SEC	THOUSAND BTU/SEC	LBM/SEC	THOUSAND BTU/SEC
18.8	221.2	280.3	3791.2	1120.4	1666.0	176.5
19.4	112.6	143.7	1522.3	438.2	1598.2	154.6
20.2	90.7	116.3	1031.1	293.5	1558.3	146.6
20.4	101.2	130.0	0.0	0.0	1561.0	137.4
22.0	0.0	0.0	0.0	0.0	1583.0	139.3
20.4	101.2	130.0	0.0	0.0	1561.0	137.4
22.0	0.0	0.0	0.0	0.0	1583.0	139.3

Note: This table presents mass and/or energy release data related to the long-term LOCA containment response analysis of record. Section 6.2.1.8 contains a discussion of the mass and energy release data associated with this analysis of record, as compared with the mass and energy release data associated with the long-term LOCA containment response at an analyzed core power level of 3659 MWt.

TABLE 6.2-43 DOUBLE-ENDED PUMP SUCTION GUILLOTINE (MINIMUM SAFETY INJECTION) REFLOOD MASS AND ENERGY RELEASES

	BREAK PATH NO.1 FLOW		BREAK PATH NO.2 FLOW	
TIME SECONDS	LBM/SEC	THOUSAND BTU/SEC	LBM/SEC	THOUSAND BTU/SEC
24.2	0.0	0.0	0.0	0.0
24.7	.0	.0	146.7	12.9
25.0	.0	.0	146.7	12.9
25.3	44.3	52.3	146.7	12.9
27.3	135.9	160.7	146.7	12.9
28.3	164.2	194.1	146.7	12.9
29.3	610.0	725.5	5265.9	680.5
30.3	772.7	921.3	6546.7	920.9
31.3	755.9	901.0	6421.0	908.4
33.3	717.3	854.6	6123.1	874.5
35.3	682.1	812.2	5853.2	842.4
36.3	665.8	792.6	5724.2	827.4
38.3	635.8	756.5	5482.3	799.3
40.3	608.6	724.0	5259.5	773.5
42.3	583.9	694.3	5053.3	749.7
44.3	561.3	667.3	4861.9	727.5
46.3	540.6	642.3	4683.5	706.8
48.3	521.3	619.3	4516.5	687.4
50.3	503.4	597.8	4359.5	669.1
52.3	486.6	577.8	4211.5	651.7
56.3	456.0	541.2	3938.5	619.4

Note: This table presents mass and/or energy release data related to the long-term LOCA containment response analysis of record. Section 6.2.1.8 contains a discussion of the mass and energy release data associated with this analysis of record, as compared with the mass and energy release data associated with the long-term LOCA containment response at an analyzed core power level of 3659 MWt.

	BREAK PATH NO.1 FLOW		BREAK PATH NO.2 FLOW	
TIME SECONDS	LBM/SEC	THOUSAND BTU/SEC	LBM/SEC	THOUSAND BTU/SEC
57.3	493.6	585.8	339.1	254.5
58.3	548.0	651.3	360.8	286.0
62.3	501.8	595.9	341.1	259.4
63.3	490.3	582.2	336.2	252.9
67.3	448.1	531.7	318.5	229.2
77.3	361.5	428.5	282.6	182.3
85.3	309.4	366.4	261.5	155.0
93.3	268.5	317.8	245.3	134.3
101.3	237.1	280.6	233.1	118.8
109.3	213.7	252.8	224.2	107.6
121.3	190.6	225.4	215.6	96.8
133.3	177.8	210.3	210.9	90.8
147.3	170.9	202.2	208.2	87.5
153.2	169.7	200.6	207.7	86.8

Note: This table presents mass and/or energy release data related to the long-term LOCA containment response analysis of record. Section 6.2.1.8 contains a discussion of the mass and energy release data associated with this analysis of record, as compared with the mass and energy release data associated with the long-term LOCA containment response at an analyzed core power level of 3659 MWt.

TABLE 6.2-44 DOUBLE-ENDED PUMP SUCTION GUILLOTINE (MAXIMUM SAFETY INJECTION) REFLOOD MASS AND ENERGY RELEASES

	BREAK PATH NO.1 FLOW		BREAK PATH NO.2 FLOW	
TIME SECONDS	LBM/SEC	THOUSAND BTU/SEC	LBM/SEC	THOUSAND BTU/SEC
24.2	0.0	0.0	0.0	0.0
25.0	.0	.0	.0	.0
25.1	57.6	68.1	.0	.0
25.2	49.6	58.6	.0	.0
26.2	94.5	111.7	.0	.0
27.3	134.8	159.4	.0	.0
28.3	174.4	206.2	.0	.0
29.3	822.1	983.7	6923.0	941.1
30.3	830.2	990.6	6969.3	968.2
32.3	790.6	942.8	6675.9	937.2
33.3	772.0	920.4	6536.0	920.9
34.3	754.2	899.0	6401.2	905.2
36.3	721.5	859.6	6148.0	875.6
38.3	692.1	824.3	5916.0	848.7
40.3	665.6	792.4	5702.6	823.9
42.3	641.5	763.4	5505.6	801.1
43.3	630.2	749.9	5412.6	790.4
45.3	699.0	724.4	5236.1	769.9
47.3	589.3	700.8	5071.0	750.6
47.4	588.4	699.7	5063.0	749.7
49.3	571.0	678.9	4916.2	732.4

Note: This table presents mass and/or energy release data related to the long-term LOCA containment response analysis of record. Section 6.2.1.8 contains a discussion of the mass and energy release data associated with this analysis of record, as compared with the mass and energy release data associated with the long-term LOCA containment response at an analyzed core power level of 3659 MWt.

	BREAK PATH NO.1 FLOW		BREAK PATH NO.2 FLOW	
TIME SECONDS	LBM/SEC	THOUSAND BTU/SEC	LBM/SEC	THOUSAND BTU/SEC
50.3	562.3	668.4	4842.3	723.7
52.3	545.7	648.6	4701.0	706.9
54.3	530.1	629.8	4567.4	690.8
56.3	515.3	612.1	4440.8	675.4
58.3	501.3	595.3	4320.5	664.7
59.4	201.1	237.9	1111.6	292.9
71.4	196.0	231.8	1119.7	289.7
80.4	192.6	227.8	1125.1	287.0
95.4	187.2	221.4	1134.3	282.4
99.4	185.8	219.8	1136.7	281.2
115.4	180.2	213.2	1146.6	276.0
119.4	178.9	211.5	1149.1	274.7
151.4	168.3	199.0	1168.7	263.5
155.1	167.1	197.6	1170.9	262.2

Note: This table presents mass and/or energy release data related to the long-term LOCA containment response analysis of record. Section 6.2.1.8 contains a discussion of the mass and energy release data associated with this analysis of record, as compared with the mass and energy release data associated with the long-term LOCA containment response at an analyzed core power level of 3659 MWt.

TABLE 6.2-45 0.6 DOUBLE-ENDED PUMP SUCTION GUILLOTINE REFLOOD MASS AND ENERGY RELEASES

	BREAK PATH NO.1 FLOW		BREAK PATH NO.2 FLOW	
TIME SECONDS	LBM/SEC	THOUSAND BTU/SEC	LBM/SEC	THOUSAND BTU/SEC
25.4	0.0	0.0	0.0	0.0
25.9	.0	.0	146.7	12.9
26.3	42.0	49.6	146.7	12.9
28.5	120.2	142.1	146.7	12.9
29.5	144.9	171.3	146.7	12.9
30.5	455.8	541.1	4148.9	519.8
31.5	559.1	667.6	6207.2	897.6
32.5	317.2	378.3	6526.8	1138.9
32.7	538.4	642.9	6066.6	885.7
33.5	639.4	762.2	6244.6	825.6
34.5	502.8	600.1	5819.6	856.8
35.5	247.2	294.6	6136.8	1108.9
36.5	462.5	551.1	6212.9	716.4
36.8	414.1	493.5	6151.2	656.6
37.5	408.5	486.8	6102.7	631.8
38.6	586.9	698.8	5470.2	805.0
40.6	560.4	666.9	5245.5	779.0
42.6	537.1	638.9	5042.0	754.6
44.6	515.7	613.3	4852.6	731.9
46.6	496.2	589.9	4676.0	710.7
48.6	478.1	568.2	4510.6	690.9

Note: This table presents mass and/or energy release data related to the long-term LOCA containment response analysis of record. Section 6.2.1.8 contains a discussion of the mass and energy release data associated with this analysis of record, as compared with the mass and energy release data associated with the long-term LOCA containment response at an analyzed core power level of 3659 MWt.

	BREAK PATH NO.1 FLOW		BREAK PATH NO.2 FLOW	
TIME SECONDS	LBM/SEC	THOUSAND BTU/SEC	LBM/SEC	THOUSAND BTU/SEC
49.6	469.6	558.0	4431.7	681.4
53.6	438.3	520.6	4138.2	646.1
57.6	410.8	487.6	3874.7	614.2
58.7	373.2	442.4	300.8	203.1
59.7	515.1	612.5	368.0	297.2
61.7	495.9	589.6	359.0	285.1
69.7	415.1	492.8	321.5	234.4
76.7	358.1	424.7	295.5	199.8
80.7	331.2	392.6	283.2	183.8
88.7	286.6	339.6	263.3	157.9
96.7	251.7	298.1	248.0	138.2
104.7	224.7	266.0	236.3	123.3
132.7	175.5	207.6	215.8	97.2
157.5	164.4	194.4	211.1	91.3

Note: This table presents mass and/or energy release data related to the long-term LOCA containment response analysis of record. Section 6.2.1.8 contains a discussion of the mass and energy release data associated with this analysis of record, as compared with the mass and energy release data associated with the long-term LOCA containment response at an analyzed core power level of 3659 MWt.

TABLE 6.2-46 THREE-FOOT SQUARED PUMP SUCTION SPLIT REFLOOD MASS AND ENERGY RELEASES

	BREAK PATH NO.1 FLOW	
TIME SECONDS	LBM/SEC	THOUSAND BTU/SEC
37.2	0.0	0.0
37.7	146.7	12.9
39.3	248.4	133.8
41.2	308.7	206.1
42.2	3136.3	744.6
43.3	7095.2	1801.1
44.3	6988.0	1780.4
46.3	6679.0	1704.6
48.3	6386.4	1633.1
49.3	6248.8	1599.7
51.3	5990.4	1537.4
53.3	5752.2	1480.5
55.3	5531.5	1428.2
57.3	5326.5	1380.0
61.3	4956.3	1293.5
62.3	4870.9	1273.6
64.3	4707.5	1235.7
68.3	4406.5	1165.9
69.4	1018.4	1110.5
70.4	1351.3	1582.8
71.4	1320.5	1546.2
73.4	1106.1	1275.7
74.4	940.1	1022.8
75.4	813.5	845.6
80.4	673.9	662.2
84.4	613.4	585.1
88.4	563.8	522.3
98.4	472.0	407.4
106.4	425.0	349.2
118.4	384.2	299.0

Note: This table presents mass and/or energy release data related to the long-term LOCA containment response analysis of record. Section 6.2.1.8 contains a discussion of the mass and energy release data associated with this analysis of record, as compared with the mass and energy release data associated with the long-term LOCA containment response at an analyzed core power level of 3659 MWt.

BREAK PATH NO.1 FLOW

TIME SECONDS	LBM/SEC	THOUSAND BTU/SEC
132.4	363.2	273.3
152.4	355.2	263.5
161.0	355.0	263.3
161.1	528.2	179.3
100000.0	528.2	70.2

Note: This table presents mass and/or energy release data related to the long-term LOCA containment response analysis of record. Section 6.2.1.8 contains a discussion of the mass and energy release data associated with this analysis of record, as compared with the mass and energy release data associated with the long-term LOCA containment response at an analyzed core power level of 3659 MWt.

TABLE 6.2-47 DOUBLE-ENDED COLD LEG GUILLOTINE BLOWDOWN MASS AND ENERGY RELEASES

	BREAK PATH NO.1 FLOW		BREAK PATH NO.2 FLOW		SI SPILL PATH FLOW	
TIME SECONDS	LBM/SEC	THOUSAND BTU/SEC	LBM/SEC	THOUSAND BTU/SEC	LBM/SEC	THOUSAND BTU/SEC
22.0	0.0	0.0	0.0	0.0	0.0	0.0
22.5	.0	.0	.0	.0	1649.6	145167.4
22.9	.0	.0	.0	.0	1632.2	143630.8
23.0	35.6	42.0	.0	.0	1618.7	142449.4
23.3	17.0	20.1	.0	.0	1608.7	141562.7
24.0	33.5	39.6	.0	.0	1577.5	138820.2
26.0	58.7	69.4	.0	.0	1498.9	131900.0
28.0	75.6	89.4	.0	.0	1425.9	125481.1
29.0	83.5	98.8	264.7	36.6	1390.9	122398.8
30.0	113.4	134.2	5873.9	836.3	1362.4	119889.6
31.0	115.1	136.3	6051.5	872.8	1329.8	117020.7
32.9	112.1	132.7	5757.4	844.1	1270.5	111804.2
34.0	110.5	130.8	5594.0	827.7	1237.6	108912.0
35.0	109.1	129.1	5452.4	813.4	1208.6	106357.2
36.0	107.8	127.5	5316.8	799.7	1180.3	103868.7
37.0	106.5	126.1	5187.0	786.5	1152.8	101442.3
39.0	104.2	123.3	4943.2	761.6	1099.6	96761.5

Note: This table presents mass and/or energy release data related to the long-term LOCA containment response analysis of record. Section 6.2.1.8 contains a discussion of the mass and energy release data associated with this analysis of record, as compared with the mass and energy release data associated with the long-term LOCA containment response at an analyzed core power level of 3659 MWt.

	BREAK PATH NO.1 FLOW		BREAK PATH NO.2 FLOW		SI SPILL PATH FLOW	
TIME SECONDS	LBM/SEC	THOUSAND BTU/SEC	LBM/SEC	THOUSAND BTU/SEC	LBM/SEC	THOUSAND BTU/SEC
40.0	103.1	122.0	4828.4	749.8	146.7	12908.2
42.0	101.1	119.7	4611.4	727.4	146.7	12908.2
44.0	99.3	117.5	4409.4	706.4	146.7	12908.2
46.0	97.6	115.5	4220.4	686.7	146.7	12908.2
47.1	99.4	117.6	236.4	279.5	146.7	12908.2
51.1	98.0	116.0	232.5	274.8	146.7	12908.2
68.1	93.5	110.6	219.3	259.3	146.7	12908.2
99.1	89.2	105.5	229.0	245.8	146.7	12908.2
103.1	88.7	104.9	230.7	244.3	146.7	12908.2
135.1	84.5	100.0	247.9	232.2	146.7	12908.2
137.1	84.3	99.7	249.1	231.4	146.7	12908.2
173.1	78.8	93.2	268.9	216.2	146.7	12908.2
203.1	73.9	87.4	283.2	202.7	146.7	12908.2
212.1	72.4	85.6	287.3	198.7	146.7	12908.2
212.2	114.1	134.8	322.6	28.4	146.7	12908.2
1000.0	79.0	93.3	357.8	31.5	146.7	12908.2
10000.0	41.7	49.3	395.0	34.8	146.7	12908.2
100000.0	21.7	25.7	415.0	36.5	146.7	12908.2

Note: This table presents mass and/or energy release data related to the long-term LOCA containment response analysis of record. Section 6.2.1.8 contains a discussion of the mass and energy release data associated with this analysis of record, as compared with the mass and energy release data associated with the long-term LOCA containment response at an analyzed core power level of 3659 MWt.

TABLE 6.2-48 DOUBLE-ENDED PUMP SUCTION GUILLOTINE (MINIMUM SAFETY INJECTION) POST-REFLOOD MASS AND ENERGY RELEASES

	BREAK PATH NO.1 FLOW		BREAK PATH NO.2 FLOW	
TIME SECONDS	LBM/SEC	THOUSAND BTU/SEC	LBM/SEC	THOUSAND BTU/SEC
165.4	221.0	273.5	365.3	127.7
180.4	219.1	271.1	367.3	127.7
185.4	206.3	255.3	380.0	125.1
190.4	206.5	255.6	379.8	124.8
205.4	205.0	253.7	381.3	124.7
250.4	200.3	247.9	386.1	124.5
255.4	200.4	248.0	386.0	124.3
280.4	197.6	244.5	388.8	124.3
290.4	197.1	243.9	389.2	124.0
320.4	193.7	239.7	392.7	124.0
330.4	192.6	238.4	393.7	123.9
335.4	177.2	219.3	409.1	122.3
355.4	175.1	216.7	411.2	122.2
370.4	173.1	214.2	413.2	122.3
375.4	172.8	213.8	413.6	122.2
395.4	170.1	210.5	416.3	122.3
405.4	168.9	209.0	417.5	122.3
670.4	168.9	209.0	417.5	122.3
670.5	98.8	121.4	487.5	129.0
825.4	94.6	116.2	491.7	125.3
895.4	93.1	114.3	493.3	123.4
910.4	92.7	113.9	493.6	123.0
995.4	90.8	111.5	495.6	120.7

Note: This table presents mass and/or energy release data related to the long-term LOCA containment response analysis of record. Section 6.2.1.8 contains a discussion of the mass and energy release data associated with this analysis of record, as compared with the mass and energy release data associated with the long-term LOCA containment response at an analyzed core power level of 3659 MWt.

TIME SECONDS	BREAK PATH NO.1 FLOW LBM/SEC	BREAK PATH NO.1 FLOW THOUSAND BTU/SEC	BREAK PATH NO.2 FLOW LBM/SEC	BREAK PATH NO.2 FLOW THOUSAND BTU/SEC
1065.4	89.6	110.1	496.7	118.6
1210.4	87.3	107.1	499.1	117.9
1305.4	85.7	105.2	500.6	114.2
1350.4	85.0	104.3	501.4	112.4
1565.4	81.8	100.4	504.6	108.9
1761.0	81.7	100.3	504.6	108.5
1761.1	87.4	112.2	493.9	55.4
3600.0	73.3	95.9	513.1	59.4
3600.1	57.8	68.2	528.6	46.8
10000.0	42.9	50.7	543.4	47.8
100000.0	22.3	26.4	564.0	49.6
1000000.0	10.7	12.7	575.7	50.7

Note: This table presents mass and/or energy release data related to the long-term LOCA containment response analysis of record. Section 6.2.1.8 contains a discussion of the mass and energy release data associated with this analysis of record, as compared with the mass and energy release data associated with the long-term LOCA containment response at an analyzed core power level of 3659 MWt.

TABLE 6.2-49 DOUBLE-ENDED PUMP SUCTION GUILLOTINE (MAXIMUM SAFETY INJECTION) POST-REFLOOD MASS AND ENERGY RELEASES

	BREAK PATH NO.1 FLOW		BREAK PATH NO.2 FLOW	
TIME SECONDS	LBM/SEC	THOUSAND BTU/SEC	LBM/SEC	THOUSAND BTU/SEC
165.0	184.7	230.2	1276.8	216.8
173.0	183.8	229.1	1277.7	216.9
203.0	183.7	229.0	1277.8	215.7
208.0	183.0	228.1	1278.5	215.7
218.0	183.4	228.6	1278.1	215.2
233.0	183.0	228.1	1278.5	214.7
238.0	182.3	227.2	1279.2	214.7
258.0	182.7	227.7	1278.8	208.2
263.0	181.9	226.7	1279.6	208.2
278.0	182.0	226.8	1279.5	207.7
328.0	180.9	225.5	1280.6	206.2
333.0	181.5	226.2	1280.0	205.8
348.0	180.5	225.0	1281.0	205.5
378.0	180.6	225.1	1280.9	204.4
408.0	179.6	223.8	1281.9	198.1
413.0	180.0	224.3	1281.5	197.8
428.0	179.4	223.6	1282.1	197.5
438.0	179.7	224.0	1261.8	197.1
463.0	178.9	223.0	1282.6	196.5
678.0	178.8	222.8	1282.7	196.0
678.1	98.6	122.0	1362.9	212.1
688.0	98.4	121.6	1363.1	211.8
773.0	96.0	118.7	1365.5	209.3
808.0	95.0	117.5	1366.5	208.3
938.0	92.1	113.9	1369.4	204.0
1208.0	87.3	107.9	1374.2	197.3
1213.0	87.3	107.8	1374.2	197.1
1458.0	83.3	102.8	1378.2	190.3
1636.9	83.3	102.8	1378.2	190.3
1637.0	88.9	113.9	1372.6	130.3

Note: This table presents mass and/or energy release data related to the long-term LOCA containment response analysis of record. Section 6.2.1.8 contains a discussion of the mass and energy release data associated with this analysis of record, as compared with the mass and energy release data associated with the long-term LOCA containment response at an analyzed core power level of 3659 MWt.

	BREAK PATH NO.1 FLOW		BREAK PATH NO.2 FLOW	
TIME SECONDS	LBM/SEC	THOUSAND BTU/SEC	LBM/SEC	THOUSAND BTU/SEC
3600.0	73.3	95.9	1388.2	134.6
3600.1	57.8	68.2	1403.7	123.5
10000.0	42.9	50.7	1418.6	124.8
100000.0	22.3	26.4	1439.2	126.6
1000000.0	10.7	12.7	1450.8	127.7

Note: This table presents mass and/or energy release data related to the long-term LOCA containment response analysis of record. Section 6.2.1.8 contains a discussion of the mass and energy release data associated with this analysis of record, as compared with the mass and energy release data associated with the long-term LOCA containment response at an analyzed core power level of 3659 MWt.

TABLE 6.2-50 0.6 DOUBLE-ENDED PUMP SUCTION GUILLOTINE POST-REFLOOD MASS AND ENERGY RELEASES

	BREAK PATH NO.1 FLOW		BREAK PATH NO.2 FLOW	
TIME SECONDS	LBM/SEC	THOUSAND BTU/SEC	LBM/SEC	THOUSAND BTU/SEC
164.8	224.7	280.2	361.6	127.5
169.8	224.3	279.7	362.0	127.4
174.8	211.7	264.0	374.6	124.7
204.8	208.2	259.6	378.2	124.6
214.8	207.1	258.2	379.3	124.6
224.8	206.8	257.6	379.6	124.3
244.8	205.0	255.7	381.3	124.1
274.8	202.2	252.1	384.2	123.9
279.8	201.7	251.5	384.6	123.9
314.8	197.6	246.4	388.7	123.8
319.8	181.4	226.2	404.9	122.3
334.8	180.0	224.5	406.3	122.2
354.8	177.6	221.5	408.8	122.3
359.8	177.6	221.4	408.8	122.1
404.8	171.7	214.1	414.6	122.3
414.8	170.8	212.9	415.6	122.2
439.8	167.6	209.0	418.7	122.3
704.8	167.4	208.7	418.9	122.2
704.9	98.0	121.2	488.4	128.9
709.8	97.8	121.0	488.5	128.8
789.8	95.6	118.2	490.8	126.8
829.8	94.6	117.0	491.7	125.8
1074.8	89.6	110.8	496.8	118.9
1214.8	87.3	107.9	499.0	118.4
1314.8	85.7	105.9	500.7	114.5
1449.8	83.5	103.1	502.9	112.5
1454.8	83.4	103.0	502.9	112.2
1574.8	81.8	101.0	504.5	109.2
1769.8	81.8	101.0	504.6	108.9
1769.9	87.5	112.3	498.9	55.6

Note: This table presents mass and/or energy release data related to the long-term LOCA containment response analysis of record. Section 6.2.1.8 contains a discussion of the mass and energy release data associated with this analysis of record, as compared with the mass and energy release data associated with the long-term LOCA containment response at an analyzed core power level of 3659 MWt.

	BREAK PATH NO.1 FLOW		BREAK PATH NO.2 FLOW	
TIME SECONDS	LBM/SEC	THOUSAND BTU/SEC	LBM/SEC	THOUSAND BTU/SEC
3600.0	73.4	96.2	512.9	59.5
3600.1	57.8	68.2	528.6	46.5
10000.0	42.9	50.7	543.4	47.8
100000.0	22.3	26.4	564.0	49.6
1000000.0	10.7	12.7	575.7	50.7

Note: This table presents mass and/or energy release data related to the long-term LOCA containment response analysis of record. Section 6.2.1.8 contains a discussion of the mass and energy release data associated with this analysis of record, as compared with the mass and energy release data associated with the long-term LOCA containment response at an analyzed core power level of 3659 MWt.

TABLE 6.2-51 DOUBLE-ENDED PUMP SUCTION GUILLOTINE (MINIMUM SAFETY INJECTION) MASS BALANCE

	TIME (SECONDS)	.00	24.20	24.20	153.24	675.36	1761.02	3600.00
		MASS (THOUSAND LBM)						
INITIAL	IN RCS AND ACC	802.38	802.38	802.38	802.38	802.38	802.38	802.38
ADDED MASS	PUMPED INJECTION	0.00	0.00	0.00	71.34	370.38	1006.97	2085.27
	TOTAL ADDED	0.00	0.00	0.00	71.34	370.38	1006.97	2085.27
*** TOTAL AVAILABLE ***		802.38	802.38	802.38	873.72	1172.76	1809.35	2887.65
DISTRIBUTION	REACTOR COOLANT	505.43	96.42	96.47	167.92	167.92	167.92	167.92
	ACCUMULATOR	296.95	208.05	208.01	-.00	0.00	0.00	0.00
	TOTAL CONTENTS	802.38	304.47	304.47	167.92	167.92	167.92	167.92
EFFLUENT	BREAK FLOW	0.00	497.90	497.90	705.79	1004.84	1641.43	2719.73
	ECCS SPILL	0.00	0.00	0.00	0.00	0.00	0.00	0.00
	TOTAL EFFLUENT	0.00	497.90	497.90	705.79	1004.84	1641.43	2719.73
*** TOTAL ACCOUNTABLE ***		802.38	802.37	802.37	873.71	1172.75	1809.34	2887.65

Note: This table presents mass and/or energy release data related to the long-term LOCA containment response analysis of record. Section 6.2.1.8 contains a discussion of the mass and energy release data associated with this analysis of record, as compared with the mass and energy release data associated with the long-term LOCA containment response at an analyzed core power level of 3659 MWt.

TABLE 6.2-52 DOUBLE-ENDED PUMP SUCTION GUILLOTINE (MAXIMUM SAFETY INJECTION) MASS BALANCE

	TIME (SECONDS)	.00	24.20	24.20	155.09	682.99	1636.62	3600.00
		MASS (THOUSAND LBM)						
INITIAL	IN RCS AND ACC	802.38	802.38	802.38	802.38	802.38	802.38	802.38
ADDED MASS	PUMPED INJECTION	0.00	0.00	0.00	184.61	937.28	2331.36	5200.49
	TOTAL ADDED	0.00	0.00	0.00	184.61	937.28	2331.36	5200.49
*** TOTAL AVAILABLE ***		802.38	802.38	802.38	986.98	1739.66	3133.74	6002.87
DISTRIBUTION	REACTOR COOLANT	505.43	96.42	96.47	177.04	177.04	177.04	177.04
	ACCUMULATOR	296.95	208.05	208.01	-.00	0.00	0.00	0.00
	TOTAL CONTENTS	802.38	304.47	304.47	177.04	177.04	177.04	177.04
EFFLUENT	BREAK FLOW	0.00	497.90	497.90	809.94	1562.61	2956.69	5825.82
	ECCS SPILL	0.00	0.00	0.00	0.00	0.00	0.00	0.00
	TOTAL EFFLUENT	0.00	497.90	497.90	809.94	1562.61	2956.69	5825.82
*** TOTAL ACCOUNTABLE ***		802.38	802.37	802.37	986.98	1739.65	3133.73	6002.86

Note: This table presents mass and/or energy release data related to the long-term LOCA containment response analysis of record. Section 6.2.1.8 contains a discussion of the mass and energy release data associated with this analysis of record, as compared with the mass and energy release data associated with the long-term LOCA containment response at an analyzed core power level of 3659 MWt.

TABLE 6.2-53 0.6 DOUBLE-ENDED PUMP SUCTION GUILLOTINE MASS BALANCE

	TIME (SECONDS)	.00	25.40	25.40	157.46	709.83	1769.76	3600.00
		MASS (THOUSAND LBM)						
INITIAL	IN RCS AND ACC	802.38	802.38	802.38	802.38	802.38	802.38	802.38
ADDED MASS	PUMPED INJECTION	0.00	0.00	0.00	72.58	392.14	1013.65	2086.82
	TOTAL ADDED	0.00	0.00	0.00	72.58	392.14	1013.65	2086.82
*** TOTAL AVAILABLE ***		802.38	802.38	802.38	874.95	1194.52	1816.02	2889.20
DISTRIBUTION	REACTOR COOLANT	505.43	89.41	100.05	171.60	171.60	171.60	171.60
	ACCUMULATOR	296.95	214.19	203.55	-.00	0.00	0.00	0.00
	TOTAL CONTENTS	802.38	303.61	303.61	171.60	171.60	171.60	171.60
EFFLUENT	BREAK FLOW	0.00	498.77	498.77	703.35	1022.92	1644.42	2717.60
	ECCS SPILL	0.00	0.00	0.00	0.00	0.00	0.00	0.00
	TOTAL EFFLUENT	0.00	498.77	498.77	703.35	1022.92	1644.42	2717.60
*** TOTAL ACCOUNTABLE ***		802.38	802.37	802.37	874.95	1194.51	1816.02	2889.19

Note: This table presents mass and/or energy release data related to the long-term LOCA containment response analysis of record. Section 6.2.1.8 contains a discussion of the mass and energy release data associated with this analysis of record, as compared with the mass and energy release data associated with the long-term LOCA containment response at an analyzed core power level of 3659 MWt.

TABLE 6.2-54 THREE-FOOT SQUARED PUMP SUCTION SPLIT MASS BALANCE

	TIME (SECONDS)	.00	37.20	37.20	160.96
	MASS (THOUSAND LBM)				
INITIAL	IN RCS AND ACC	802.38	802.38	802.38	802.38
ADDED MASS	PUMPED INJECTION	0.00	0.00	0.00	65.37
	TOTAL ADDED	0.00	0.00	0.00	65.37
*** TOTAL AVAILABLE ***		802.38	802.38	802.38	867.75
DISTRIBUTION	REACTOR COOLANT	505.43	109.11	109.15	180.01
	ACCUMULATOR	296.95	199.15	199.10	-.00
	TOTAL CONTENTS	802.38	308.25	308.25	180.01
EFFLUENT	BREAK FLOW	0.00	494.12	494.12	687.73
	ECCS SPILL	0.00	0.00	0.00	0.00
	TOTAL EFFLUENT	0.00	494.12	494.12	687.73
*** TOTAL ACCOUNTABLE ***		802.38	802.37	802.37	867.74

Note: This table presents mass and/or energy release data related to the long-term LOCA containment response analysis of record. Section 6.2.1.8 contains a discussion of the mass and energy release data associated with this analysis of record, as compared with the mass and energy release data associated with the long-term LOCA containment response at an analyzed core power level of 3659 MWt.

TABLE 6.2-55 DOUBLE-ENDED HOT LEG GUILLOTINE MASS BALANCE

	TIME (SECONDS)	.00	21.00	21.00
	MASS (THOUSAND LBM)			
INITIAL	IN RCS AND ACC	802.38	802.38	802.38
ADDED MASS	PUMPED INJECTION	0.00	0.00	0.00
	TOTAL ADDED	0.00	0.00	0.00
*** TOTAL AVAILABLE ***		802.38	802.38	802.38
DISTRIBUTION	REACTOR COOLANT	505.43	96.42	96.50
	ACCUMULATOR	296.95	232.00	231.92
	TOTAL CONTENTS	802.38	328.42	328.42
EFFLUENT	BREAK FLOW	0.00	473.96	473.96
	ECCS SPILL	0.00	0.00	0.00
	TOTAL EFFLUENT	0.00	473.96	473.96
*** TOTAL ACCOUNTABLE ***		802.38	802.38	802.38

Note: This table presents mass and/or energy release data related to the long-term LOCA containment response analysis of record. Section 6.2.1.8 contains a discussion of the mass and energy release data associated with this analysis of record, as compared with the mass and energy release data associated with the long-term LOCA containment response at an analyzed core power level of 3659 MWt.

TABLE 6.2-56 DOUBLE-ENDED COLD LEG GUILLOTINE MASS BALANCE

	TIME (SECONDS)	.00	22.00	22.00	212.09
	MASS (THOUSAND LBM)				
INITIAL	IN RCS AND ACC	802.38	802.38	802.38	802.38
ADDED MASS	PUMPED INJECTION	0.00	0.00	0.00	110.90
	TOTAL ADDED	0.00	0.00	0.00	110.90
*** TOTAL AVAILABLE ***		802.38	802.38	802.38	913.28
DISTRIBUTION	REACTOR COOLANT	505.43	68.43	84.88	162.79
	ACCUMULATOR	296.95	176.40	159.95	-.00
	TOTAL CONTENTS	802.38	244.33	244.83	162.79
EFFLUENT	BREAK FLOW	0.00	504.84	504.84	548.39
	ECCS SPILL	0.00	52.70	52.70	101.89
	TOTAL EFFLUENT	0.00	557.54	557.54	750.27
*** TOTAL ACCOUNTABLE ***		802.38	802.37	802.37	913.06

Note: This table presents mass and/or energy release data related to the long-term LOCA containment response analysis of record. Section 6.2.1.8 contains a discussion of the mass and energy release data associated with this analysis of record, as compared with the mass and energy release data associated with the long-term LOCA containment response at an analyzed core power level of 3659 MWt.

TABLE 6.2-57 DOUBLE-ENDED PUMP SUCTION GUILLOTINE (MINIMUM SAFETY INJECTION) ENERGY BALANCE

	TIME (SECONDS)	.00	24.20	24.20	153.24	675.36	1761.02	3600.00
	ENERGY (MILLION BTU)							
INITIAL ENERGY	IN RCS, ACC,S GEN	894.34	894.34	894.34	894.34	894.34	894.34	894.34
ADDED ENERGY	PUMPED INJECTION	0.00	0.00	0.00	6.28	32.59	88.61	183.50
	DECAY HEAT	0.00	8.24	8.24	24.94	73.37	155.29	278.68
	HEAT FROM SECONDARY	0.00	-17.91	-17.91	-17.91	-9.20	-.33	-.33
	TOTAL ADDED	0.00	-9.66	-9.66	13.31	96.77	243.58	461.85
*** TOTAL AVAILABLE ***		894.34	884.68	884.68	907.66	991.11	1137.92	1356.19
DISTRIBUTION	REACTOR COOLANT	303.11	19.36	19.37	42.95	42.95	42.95	42.95
	ACCUMULATOR	26.13	18.31	18.30	-.00	0.00	0.00	0.00
	CORE STORED	26.85	13.84	13.84	5.09	4.91	4.32	3.33
	PRIMARY METAL	132.98	125.38	125.38	108.68	80.13	61.82	46.50
	SECONDARY METAL	121.87	118.64	118.64	108.10	89.06	64.06	47.45
	STEAM GENERATOR	283.40	278.28	278.18	246.96	204.34	153.83	117.22
	TOTAL CONTENTS	894.34	573.71	573.71	511.77	421.39	326.98	257.45

Note: This table presents mass and/or energy release data related to the long-term LOCA containment response analysis of record. Section 6.2.1.8 contains a discussion of the mass and energy release data associated with this analysis of record, as compared with the mass and energy release data associated with the long-term LOCA containment response at an analyzed core power level of 3659 MWt.

	TIME (SECONDS)	.00	24.20	24.20	153.24	675.36	1761.02	3600.00
	ENERGY (MILLION BTU)							
EFFLUENT	BREAK FLOW	0.00	310.98	310.98	395.93	569.76	810.98	1098.79
	ECCS SPILL	0.00	0.00	0.00	0.00	0.00	0.00	0.00
	TOTAL EFFLUENT	0.00	310.98	310.98	395.93	569.76	810.98	1098.79
*** TOTAL ACCOUNTABILITY ***		894.34	884.69	884.69	907.70	991.15	1137.96	1356.24
*** TOTAL ACCOUNTABILITY ***		894.34	884.69	884.69	907.70	991.15	1137.96	1356.24

Note: This table presents mass and/or energy release data related to the long-term LOCA containment response analysis of record. Section 6.2.1.8 contains a discussion of the mass and energy release data associated with this analysis of record, as compared with the mass and energy release data associated with the long-term LOCA containment response at an analyzed core power level of 3659 MWt.

TABLE 6.2-58 DOUBLE-ENDED PUMP SUCTION GUILLOTINE (MAXIMUM SAFETY INJECTION) ENERGY BALANCE

	TIME (SECONDS)	.00	24.20	24.20	155.19	682.99	1636.86	3600.00
	ENERGY (MILLION BTU)							
INITIAL ENERGY	IN RCS, ACC,S GEN	894.34	894.34	894.34	894.34	894.34	894.34	894.34
ADDED ENERGY	PUMPED INJECTION	0.00	0.00	0.00	16.25	82.48	205.16	457.64
	DECAY HEAT	0.00	8.24	8.24	25.15	73.93	146.81	279.47
	HEAT FROM SECONDARY	0.00	-17.91	-17.91	-17.91	-9.12	-.33	-.33
	TOTAL ADDED	0.00	-9.66	-9.66	23.49	147.30	351.64	736.79
*** TOTAL AVAILABLE ***		894.34	884.68	884.68	917.83	1041.64	1245.99	1631.13
DISTRIBUTION	REACTOR COOLANT	303.11	19.36	19.37	44.71	44.71	44.71	44.71
	ACCUMULATOR	26.13	18.31	18.30	-.00	0.00	0.00	0.00
	CORE STORED	26.85	13.84	13.84	5.09	4.91	4.39	3.33
	PRIMARY METAL	132.98	125.38	125.38	106.67	79.26	62.36	46.55
	SECONDARY METAL	121.87	118.64	118.64	108.18	87.65	64.36	47.54
	STEAM GENERATOR	283.40	278.18	278.18	247.16	200.80	154.57	117.46
	TOTAL CONTENTS	894.34	573.71	573.71	511.80	417.33	330.38	259.59
EFFLUENT	BREAK FLOW	0.00	310.98	310.98	406.09	624.37	915.67	1371.61
	ECCS SPILL	0.00	0.00	0.00	0.00	0.00	0.00	0.00
	TOTAL EFFLUENT	0.00	310.98	310.98	406.09	624.37	915.67	1371.61
*** TOTAL ACCOUNTABILITY ***		894.34	884.69	884.69	917.89	1041.70	1246.05	1631.19

Note: This table presents mass and/or energy release data related to the long-term LOCA containment response analysis of record. Section 6.2.1.8 contains a discussion of the mass and energy release data associated with this analysis of record, as compared with the mass and energy release data associated with the long-term LOCA containment response at an analyzed core power level of 3659 MWt.

TABLE 6.2-59 0.6 DOUBLE-ENDED PUMP SUCTION GUILLOTINE ENERGY BALANCE

	TIME (SECONDS)	.00	25.40	25.40	157.46	709.83	1769.76	3600.00
	ENERGY (MILLION BTU)							
INITIAL ENERGY	IN RCS, ACC,S GEN	894.34	894.34	894.34	894.34	894.34	894.34	894.34
ADDED ENERGY	PUMPED INJECTION	0.00	0.00	0.00	6.39	34.51	89.20	183.64
	DECAY HEAT	0.00	8.62	8.62	25.60	76.99	155.58	279.32
	HEAT FROM SECONDARY	0.00	-17.09	-17.09	-17.09	-7.79	.48	.48
	TOTAL ADDED	0.00	-8.48	-8.48	14.89	103.70	246.26	463.44
*** TOTAL AVAILABLE ***		894.34	885.87	885.87	909.23	998.05	1140.61	1357.78
DISTRIBUTION	REACTOR COOLANT	303.11	18.73	19.66	44.54	44.54	44.54	44.54
	ACCUMULATOR	26.13	18.85	17.91	-.00	0.00	0.00	0.00
	CORE STORED	26.85	13.79	13.79	5.09	4.91	4.33	3.33
	PRIMARY METAL	132.98	125.80	125.80	109.62	79.92	62.03	46.66
	SECONDARY METAL	121.87	119.72	119.72	109.46	88.73	64.37	47.73
	STEAM GENERATOR	283.40	281.41	281.41	250.76	204.08	154.60	117.94
	TOTAL CONTENTS	894.34	578.30	578.30	519.47	422.17	329.86	260.20
EFFLUENT	BREAK FLOW	0.00	307.58	307.58	389.94	576.05	810.92	1097.77
	ECCS SPILL	0.00	0.00	0.00	0.00	0.00	0.00	0.00
	TOTAL EFFLUENT	0.00	307.58	307.58	389.94	576.05	810.92	1097.77
*** TOTAL ACCOUNTABLE ***		894.34	885.88	885.88	909.41	998.22	1140.79	1357.96

Note: This table presents mass and/or energy release data related to the long-term LOCA containment response analysis of record. Section 6.2.1.8 contains a discussion of the mass and energy release data associated with this analysis of record, as compared with the mass and energy release data associated with the long-term LOCA containment response at an analyzed core power level of 3659 MWt.

TABLE 6.2-60 THREE-FOOT SQUARED PUMP SUCTION SPLIT ENERGY BALANCE

	TIME (SECONDS)	.00	37.20	37.20	160.96
	ENERGY (MILLION BTU)				
INITIAL ENERGY	IN RCS, ACC,S GEN	894.34	894.34	894.34	894.34
ADDED ENERGY	PUMPED INJECTION	0.00	0.00	0.00	5.75
	DECAY HEAT	0.00	14.31	14.31	29.85
	HEAT FROM SECONDARY	0.00	-15.58	-15.58	-15.58
	TOTAL ADDED	0.00	-1.27	-1.27	20.02
*** TOTAL AVAILABLE ***		894.34	893.08	893.08	914.37
DISTRIBUTION	REACTOR COOLANT	303.11	22.71	22.72	44.95
	ACCUMULATOR	26.13	17.52	17.52	-.00
	CORE STORED	26.85	12.29	12.29	5.09
	PRIMARY METAL	132.98	125.51	125.51	110.80
	SECONDARY METAL	121.87	121.47	121.47	111.52
	STEAM GENERATOR	283.40	286.72	286.72	256.62
	TOTAL CONTENTS	894.34	586.22	586.22	528.97
EFFLUENT	BREAK FLOW	0.00	306.86	306.86	385.43
	ECCS SPILL	0.00	0.00	0.00	0.00
	TOTAL EFFLUENT	0.00	306.86	306.86	385.43
*** TOTAL ACCOUNTABLE ***		894.34	893.08	893.08	914.40

Note: This table presents mass and/or energy release data related to the long-term LOCA containment response analysis of record. Section 6.2.1.8 contains a discussion of the mass and energy release data associated with this analysis of record, as compared with the mass and energy release data associated with the long-term LOCA containment response at an analyzed core power level of 3659 MWt.

TABLE 6.2-61 DOUBLE-ENDED HOT LEG GUILLOTINE ENERGY BALANCE

		TIME (SECONDS)	.00	21.00	21.00
		ENERGY (MILLION BTU)			
INITIAL ENERGY		IN RCS, ACC,S GEN	894.34	894.34	894.34
ADDED ENERGY		PUMPED INJECTION	0.00	0.00	0.00
		DECAY HEAT	0.00	8.41	8.41
		HEAT FROM SECONDARY	0.00	-17.95	-17.95
		TOTAL ADDED	0.00	-9.54	-9.54
	***	TOTAL AVAILABLE ***	894.34	884.80	884.80
DISTRIBUTION		REACTOR COOLANT	303.11	23.95	23.95
		ACCUMULATOR	26.13	20.42	20.41
		CORE STORED	26.85	11.74	11.74
		PRIMARY METAL	132.98	124.74	124.74
		SECONDARY METAL	121.87	117.45	117.45
		STEAM GENERATOR	283.40	274.67	274.67
		TOTAL CONTENTS	894.34	572.97	572.97
EFFLUENT		BREAK FLOW	0.00	311.84	311.84
		ECCS SPILL	0.00	0.00	0.00
		TOTAL EFFLUENT	0.00	311.84	311.84
	***	TOTAL ACCOUNTABLE ***	894.34	884.81	884.81

Note: This table presents mass and/or energy release data related to the long-term LOCA containment response analysis of record. Section 6.2.1.8 contains a discussion of the mass and energy release data associated with this analysis of record, as compared with the mass and energy release data associated with the long-term LOCA containment response at an analyzed core power level of 3659 MWt.

TABLE 6.2-62 DOUBLE-ENDED COLD LEG GUILLOTINE ENERGY BALANCE

	TIME (SECONDS)	.00	22.00	22.00	212.09
	ENERGY (MILLION BTU)				
INITIAL ENERGY	IN RCS, ACC,S GEN	894.34	894.34	894.34	894.34
ADDED ENERGY	PUMPED INJECTION	0.00	0.00	0.00	9.76
	DECAY HEAT	0.00	6.35	6.35	29.85
	HEAT FROM SECONDARY	0.00	-17.03	-17.03	-17.03
	TOTAL ADDED	0.00	-10.68	-10.68	22.58
*** TOTAL AVAILABLE ***		894.34	883.67	883.67	916.92
DISTRIBUTION	REACTOR COOLANT	303.11	14.54	15.99	43.95
	ACCUMULATOR	26.13	15.52	14.08	-.00
	CORE STORED	26.85	16.34	16.34	5.09
	PRIMARY METAL	132.98	126.38	126.38	110.65
	SECONDARY METAL	121.87	119.53	119.53	112.12
	STEAM GENERATOR	283.40	280.82	280.82	259.05
	TOTAL CONTENTS	894.34	573.14	573.14	530.85
EFFLUENT	BREAK FLOW	0.00	305.90	305.90	377.14
	ECCS SPILL	0.00	4.64	4.64	8.97
	TOTAL EFFLUENT	0.00	310.54	310.54	386.11
*** TOTAL ACCOUNTABLE ***		894.34	883.68	883.68	916.96

Note: This table presents mass and/or energy release data related to the long-term LOCA containment response analysis of record. Section 6.2.1.8 contains a discussion of the mass and energy release data associated with this analysis of record, as compared with the mass and energy release data associated with the long-term LOCA containment response at an analyzed core power level of 3659 MWt.

TABLE 6.2-63 DOUBLE-ENDED PUMP SUCTION GUILLOTINE (MINIMUM SAFETY INJECTION) PRINCIPAL PARAMETER TRANSIENTS

TIME SECONDS	FLOODING TEMP ° F	FLOODING RATE IN/SEC	CARRYOVER FRACTION	CORE HEIGHT FT	DOWNCOMER HEIGHT FT	FLOW FRACTION	INJECTION TOTAL ACCUMULATOR SPILL (CUBIC FEET PER SECOND)			ENTHALPY BTU/LBM
24.2	204.9	0.000	0.000	0.00	0.00	.250	0.0	0.0	0.0	0.00
24.8	202.5	27.110	0.000	.52	1.76	.000	12030.7	12353.9	0.0	88.00
25.0	200.4	35.797	.000	1.05	1.97	.000	12305.6	12223.9	0.0	88.00
26.0	199.1	3.133	.314	1.51	5.32	.339	12103.3	11516.6	0.0	88.00
27.0	198.9	3.013	.455	1.66	8.73	.360	11570.7	10234.0	0.0	88.00
30.3	197.7	6.744	.674	2.15	15.00	.659	7041.8	7503.7	0.0	88.00
31.2	197.1	6.429	.693	2.31	16.00	.658	7712.7	7257.8	0.0	88.00
33.3	196.1	5.899	.725	2.62	16.00	.653	7279.1	5310.9	0.0	88.00
37.3	195.2	5.313	.743	3.11	16.00	.642	6615.5	5130.0	0.0	88.00
41.3	195.1	4.923	.749	3.54	16.00	.630	6073.4	5575.8	0.0	88.00
46.3	195.7	4.547	.753	4.03	16.00	.616	5521.8	5003.7	0.0	88.00
52.3	197.1	4.193	.754	4.57	16.00	.601	4968.7	4437.4	0.0	88.00
56.3	198.3	3.922	.754	4.91	16.00	.591	4651.0	4112.2	0.0	88.00
57.3	196.5	4.251	.756	4.98	15.95	.622	536.7	0.0	0.0	88.00
58.3	199.0	4.594	.756	5.07	15.74	.623	515.7	0.0	0.0	88.00
68.3	201.3	4.069	.754	5.51	14.81	.623	522.6	0.0	0.0	88.00
70.3	205.3	3.543	.752	6.06	13.02	.614	545.2	0.0	0.0	88.00
77.3	210.3	3.120	.748	6.54	13.11	.604	555.2	0.0	0.0	88.00
85.3	215.2	2.740	.745	7.04	12.59	.501	363.2	0.0	0.0	88.00
95.3	223.7	2.331	.741	7.58	12.25	.575	560.0	0.0	0.0	88.00

Note: This table presents mass and/or energy release data related to the long-term LOCA containment response analysis of record. Section 6.2.1.8 contains a discussion of the mass and energy release data associated with this analysis of record, as compared with the mass and energy release data associated with the long-term LOCA containment response at an analyzed core power level of 3659 MWt.

TIME SECONDS	FLOODING TEMP ° F	FLOODING RATE IN/SEC	CARRYOVER FRACTION	CORE HEIGHT FT	DOWNCOMER HEIGHT FT	FLOW FRACTION	INJECTION TOTAL ACCUMULATOR SPILL (CUBIC FEET PER SECOND)			ENTHALPY BTU/LBM
105.3	231.1	2.125	.733	8.07	12.17	.558	574.2	0.0	0.0	88.00
115.3	233.2	1.951	.737	8.52	12.27	.545	576.8	0.0	0.0	88.00
127.3	245.5	1.323	.737	9.01	12.54	.533	578.5	0.0	0.0	88.00
141.3	252.7	1.744	.733	9.55	12.99	.525	570.5	0.0	0.0	88.00
153.2	256.2	1.713	.741	10.00	13.42	.522	570.9	0.0	0.0	88.00

Note: This table presents mass and/or energy release data related to the long-term LOCA containment response analysis of record. Section 6.2.1.8 contains a discussion of the mass and energy release data associated with this analysis of record, as compared with the mass and energy release data associated with the long-term LOCA containment response at an analyzed core power level of 3659 MWt.

TABLE 6.2-64 DOUBLE-ENDED PUMP SUCTION GUILLOTINE (MAXIMUM SAFETY INJECTION) PRINCIPAL PARAMETER TRANSIENTS

TIME SECONDS	FLOODING TEMP ° F	FLOODING RATE IN/SEC	CARRYOVER FRACTION	CORE HEIGHT FT	DOWNCOMER HEIGHT FT	FLOW FRACTION	INJECTION TOTAL (CUBIC FEET PER SECOND)	INJECTION ACCUMULATOR (CUBIC FEET PER SECOND)	INJECTION SPILL (CUBIC FEET PER SECOND)	ENTHALPY BTU/LBM
24.2	204.9	0.00	0.000	0.00	0.00	.250	0.0	0.0	0.0	0.00
24.8	202.5	27.621	0.000	.51	1.89	.000	13816.3	12353.7	0.0	88.00
25.0	200.4	37.282	.000	1.86	2.21	.000	13522.5	12219.6	0.0	88.00
25.9	199.2	3.314	.311	1.50	5.58	.339	13522.5	11559.9	0.0	88.00
25.9	198.9	3.113	.457	1.66	9.37	.360	12485.1	11022.5	0.0	88.00
29.3	198.0	7.453	.642	2.02	15.98	.672	8865.8	7721.2	0.0	88.00
30.7	196.8	6.853	.696	2.30	16.00	.670	8290.7	7149.1	0.0	88.00
32.3	195.9	6.406	.721	2.56	16.00	.667	7946.7	6780.6	0.0	88.00
36.3	194.3	5.764	.743	3.59	16.00	.657	7267.1	6049.9	0.0	88.00
40.3	194.0	5.349	.750	3.56	16.00	.647	6726.0	5470.8	0.0	88.00
45.3	194.3	4.961	.754	4.09	16.00	.636	6171.2	4879.5	0.0	88.00
50.3	195.2	4.650	.755	4.58	16.00	.625	5707.6	4390.2	0.0	88.00
55.3	196.5	4.385	.755	5.04	16.00	.616	5310.1	3972.2	0.0	88.00
59.4	197.8	2.527	.738	5.38	16.00	.420	1454.8	0.0	0.0	88.00
62.4	198.9	2.511	.739	5.55	16.00	.420	1454.7	0.0	0.0	88.00
71.4	202.8	2.456	.739	6.03	16.00	.422	1454.6	0.0	0.0	88.00
80.4	207.9	2.401	.739	6.51	16.00	.424	1454.6	0.0	0.0	88.00
91.4	213.9	2.334	.740	7.07	16.00	.426	1454.5	0.0	0.0	88.00
101.4	224.9	2.274	.741	7.57	16.00	.429	1454.4	0.0	0.0	88.00
111.4	226.2	2.214	.742	8.06	16.00	.432	1454.3	0.0	0.0	88.00
121.4	232.2	2.154	.742	8.53	16.00	.435	1454.3	0.0	0.0	88.00
133.4	239.2	2.082	.744	9.07	16.00	.439	1454.2	0.0	0.0	88.00
143.4	244.8	2.022	.745	9.51	16.00	.443	1454.1	0.0	0.0	88.00
155.1	250.8	1.954	.746	10.00	16.00	.448	1454.0	0.0	0.0	88.00

Note: This table presents mass and/or energy release data related to the long-term LOCA containment response analysis of record. Section 6.2.1.8 contains a discussion of the mass and energy release data associated with this analysis of record, as compared with the mass and energy release data associated with the long-term LOCA containment response at an analyzed core power level of 3659 MWt.

TABLE 6.2-65 SYSTEM PARAMETERS

Plant model	4 loop, 12 ft core
Core power (Mwt)	3652.8
Core inlet temperature (°F)	566.5
Steam pressure (psi)	1000
Assumed containment backpressure (psia)	74.7

Note: This table presents mass and/or energy release data related to the long-term LOCA containment response analysis of record. Section 6.2.1.8 contains a discussion of the mass and energy release data associated with this analysis of record, as compared with the mass and energy release data associated with the long-term LOCA containment response at an analyzed core power level of 3659 MWt.

TABLE 6.2-66 FULL DOUBLE-ENDED MSLB AT HOT SHUTDOWN (WITH SAF IN CONTAINMENT SPRAY SYSTEM) MASS AND ENERGY RELEASES (FORWARD FLOW)

Time (sec)	Mass Flow (lbm/sec)	Enthalpy (Btu/lbm)
0.0	3229	1188.8
0.253	3145	1190.2
0.254	3145	1190.2
1.0	2896	1194.1
2.0	2549	1197.7
3.0	2272	1200.2
4.0	2044	1201.9
5.0	1855	1203.1
6.0	1698	1203.9
6.5	1631	1204.2
7.0	1565	1204.4
7.95	1457	1204.7
9.0	1354	1204.8
10.0	1268	1204.8
11.0	1208	1204.7
12.0	1199	1204.7
13.0	1187	1204.7
14.0	1171	1204.7
15.0	1154	1204.6
16.0	1134	1204.6
17.0	1113	1204.5
18.0	1092	1204.4
19.0	1071	1204.3
20.0	1050	1204.2
21.0	1045	1204.1
22.0	1025	1204.0
23.0	1006	1203.9
24.0	988	1203.8

Note: This table presents mass and energy release data related to the MSLB containment response analysis of record. Section 6.2.1.8 contains a discussion of the mass and energy release data associated with this analysis of record, as compared with the mass and energy release data associated with the MSLB containment response at an analyzed core power level of 3659 MWt.

Time (sec)	Mass Flow (lbm/sec)	Enthalpy (Btu/lbm)
25.0	971	1203.7
26.0	954	1203.6
27.0	939	1203.5
28.0	924	1203.4
29.0	910	1203.2
30.0	897	1203.1
35.0	842	1202.6
40.0	800	1202.2
45.0	769	1201.8
50.0	746	1201.5
60.0	715	1201.0
70.0	698	1200.7
80.0	687	1200.6
90.0	681	1200.5
100.0	677	1200.4
120.0	671	1200.3
140.0	666	1200.2
160.0	661	1200.1
180.0	656	1200.0
200.0	650	1199.9
220.0	644	1199.8
240.0	635	1199.4
260.0	627	1199.3
280.0	615	1199.1
281.0	613	1199.1
281.2	32.46	1199.1
1800.0	32.46	1199.1
1800.1	0	0
∞	0	0

Note: This table presents mass and energy release data related to the MSLB containment response analysis of record. Section 6.2.1.8 contains a discussion of the mass and energy release data associated with this analysis of record, as compared with the mass and energy release data associated with the MSLB containment response at an analyzed core power level of 3659 MWt.

TABLE 6.2-67 FULL DOUBLE-ENDED MSLB AT HOT SHUTDOWN (WITH SAF IN CONTAINMENT SPRAY SYSTEM) MASS AND ENERGY RELEASES (REVERSE FLOW)

Time (sec)	Mass Flow (lbm/sec)	Enthalpy (Btu/lbm)
0.0	9639	1188.8
0.253	9639	1188.8
0.254	4543	1189.4
1.0	4298	1191.3
2.0	4047	1193.5
3.0	3827	1195.3
4.0	3630	1196.8
5.0	3453	1198.1
6.0	3295	1199.2
6.5	3223	1199.4
7.0	2112	1199.4
7.95	0	1199.4
∞	0	0.0

Note: This table presents mass and energy release data related to the MSLB containment response analysis of record. Section 6.2.1.8 contains a discussion of the mass and energy release data associated with this analysis of record, as compared with the mass and energy release data associated with the MSLB containment response at an analyzed core power level of 3659 MWt.

TABLE 6.2-68 FULL DOUBLE-ENDED MSLB AT 102% POWER (WITH SAF OF BROKEN LOOP MSIV) MASS AND ENERGY RELEASES (FORWARD FLOW)

Time (sec)	Mass Flow (lbm/sec)	Enthalpy (Btu/lbm)
0.0	2884	1193.2
0.250	2823	1194.0
0.251	2823	1194.0
1.0	2641	1196.2
2.0	2435	1198.3
3.0	2270	1200.0
4.0	2138	1200.9
5.0	2053	1201.5
6.0	2012	1201.8
6.5	1993	1202.0
7.0	1974	1202.1
8.0	1938	1202.4
9.0	1900	1202.6
10.0	1858	1202.9
11.0	1813	1203.2
12.0	1773	1203.4
13.0	1727	1203.6
14.0	1680	1203.9
15.0	1636	1204.0
16.0	1610	1204.2
17.0	1569	1204.4
18.0	1528	1204.5
18.6	1504	1204.5
19.0	1488	1204.6
20.0	1450	1204.7

Note: This table presents mass and energy release data related to the MSLB containment response analysis of record. Section 6.2.1.8 contains a discussion of the mass and energy release data associated with this analysis of record, as compared with the mass and energy release data associated with the MSLB containment response at an analyzed core power level of 3659 MWt.

Time (sec)	Mass Flow (lbm/sec)	Enthalpy (Btu/lbm)
21.0	1414	1204.7
22.0	1379	1204.8
23.0	1346	1204.8
24.0	1315	1204.8
25.0	1285	1204.8
26.0	1257	1204.8
27.0	1231	1204.7
28.0	1206	1204.7
29.0	1183	1204.7
30.0	1161	1204.6
35.0	1071	1204.3
40.0	1007	1204.0
45.0	962	1203.7
50.0	931	1203.5
60.0	889	1203.2
70.0	862	1202.9
80.0	840	1202.7
90.0	823	1202.5
100.0	808	1202.3
120.0	787	1202.1
140.0	770	1201.8
160	755	1201.6
173.1	746	1201.5
173.1	32.46	1201.9
1800.0	32.46	1201.9
1800.1	0	0
∞	0	0

Note: This table presents mass and energy release data related to the MSLB containment response analysis of record. Section 6.2.1.8 contains a discussion of the mass and energy release data associated with this analysis of record, as compared with the mass and energy release data associated with the MSLB containment response at an analyzed core power level of 3659 MWt.

TABLE 6.2-69 FULL DOUBLE-ENDED MSLB AT 102% POWER (WITH SAF OF BROKEN LOOP MSIV) MASS AND ENERGY RELEASES (REVERSE FLOW)

Time (sec)	Mass Flow (lbm/sec)	Enthalpy (Btu/lbm)
0.0	8611	1193.2
0.250	8611	1193.4
0.251	4058	1193.5
1.0	3944	1195.1
2.0	3813	1196.5
3.0	3711	1197.6
4.0	3630	1198.3
5.0	3562	1198.8
6.0	3505	1199.1
6.5	3479	1199.3
7.0	3335	1199.4
8.0	3098	1199.5
9.0	2760	1199.8
10.0	2473	1200.0
11.0	2185	1200.2
12.0	1898	1200.5
13.0	1610	1200.8
14.0	1323	1201.2
15.0	1035	1201.6
16.0	748	1202.2
17.0	460	1202.9
18.0	173	1203.8
18.6	0	1204.5
∞	0	1204.5

Note: This table presents mass and energy release data related to the MSLB containment response analysis of record. Section 6.2.1.8 contains a discussion of the mass and energy release data associated with this analysis of record, as compared with the mass and energy release data associated with the MSLB containment response at an analyzed core power level of 3659 MWt.

TABLE 6.2-69A MASS AND ENERGY BALANCE PEAK CALCULATED CONTAINMENT PRESSURE FOR MSLB

ENERGY BALANCE (X 10^6 Btu)

	Initial 0 sec	Peak Pressure 281 sec	End of Blowdown 1800 sec
Containment atmosphere	3.2	200.5	122.2
Containment sump	1.1	20.9	161.1
Total Energy	4.3	221.4	283.3
Initial energy	4.3	4.3	4.3
Energy added by blowdown	0.0	260.3	345.1
Energy added by sprays	0.0	3.6	44.7
Energy removed by heat sinks	0.0	46.8	86.3
Total Energy	4.3	221.4	307.8

MASS BALANCE (X 10^3 lbm)

	Initial 0 sec	Peak Pressure 281 sec	End of Blowdown 1800 sec
Containment atmosphere	203.9	374.5	311.2
Containment sump	12.5	111.5	830.1
Total Mass	216.4	486.0	1141.3
Initial Mass	216.4	216.4	216.4
Mass added by blowdown	0.0	216.9	287.6
Mass added by sprays	0.0	52.3	657.5
Total Mass	216.4	485.6	1161.5

Note: This table presents mass and energy release data related to the MSLB containment response analysis of record. Section 6.2.1.8 contains a discussion of the mass and energy release data associated with this analysis of record, as compared with the mass and energy release data associated with the MSLB containment response at an analyzed core power level of 3659 MWt.

TABLE 6.2-69B MASS AND ENERGY BALANCE PEAK CALCULATED CONTAINMENT TEMPERATURE FOR MSLB

ENERGY BALANCE (X 10^6 Btu)

	Initial 0 sec	Peak Temperature 82 sec	End of Blowdown 1800 sec
Containment atmosphere	3.2	155.0	57.2
Containment sump	1.1	4.7	264.6
Total Energy	4.3	159.7	321.8
Initial energy	4.3	4.3	4.3
Energy added by blowdown	0.0	175.1	324.7
Energy added by sprays	0.0	0.0	91.1
Energy removed by heat sinks	0.0	19.7	63.8
Total Energy	4.3	159.7	356.3

MASS BALANCE (X 10^3 lbm)

	Initial 0 sec	Peak Temperature 82 sec	End of Blowdown 1800 sec
Containment atmosphere	203.9	330.4	252.8
Containment sump	12.5	31.8	1545.2
Total Mass	216.4	362.2	1797.0
Initial Mass	216.4	216.4	216.4
Mass added by blowdown	0.0	145.8	270.2
Mass added by sprays	0.0	0.0	1340.0
Total Mass	216.4	362.2	1826.6

Note: This table presents mass and energy release data related to the MSLB containment response analysis of record. Section 6.2.1.8 contains a discussion of the mass and energy release data associated with this analysis of record, as compared with the mass and energy release data associated with the MSLB containment response at an analyzed core power level of 3659 MWt.

TABLE 6.2-75 CONTAINMENT SPRAY SYSTEM PARAMETERS

Spray Additive Tank	
Quantity	1
Type	Vertical cylinder
Volume	10,700 gal
Material	Austenitic stainless steel
Design code	ASME Section III, Class 3
ANSI N18.2 safety class	Class 3
Operating pressure	Atmospheric
Design temperature	100°F
Maximum fluid temperature	98°F
NaOH concentration	20% by weight
Containment Spray Pumps	
Quantity	2
Type	Centrifugal
Horsepower	600 Hp
Design flow	3010 gpm
Operating flow (minimum)	2808 gpm
NPSH required	21 ft
Operating flow (recirculation)	3660 gpm
NPSH required	23.6 ft.
NPSH available	23.76 ft.
Design temperature	300°F
Design pressure	350 psig
Design code	ASME III, Class 2
ANSI N18.2 safety class	Safety Class 2

Refueling Water Storage Tank

Quantity	1
Capacity	475,000 gal
Material	Austenitic stainless steel
Type	Vertical cylinder
Design code	ASME III, Class 2
ANSI N18.2 safety class	Class 2
Concentration of boron	2400-2600 ppm boron
Design temperature	100°F
Maximum fluid temperature	98°F*
Operating pressure	Atmospheric

Containment Spray Heat Exchanger

Quantity	2
Type	Shell and tube
Design codes:	
Shell side	ASME III, Class 3
Tube side	ASME III, Class 2
ANSI N18.2 safety class:	
Shell side	3
Tube side	2
Material:	
Shell side	Carbon steel
Tube side	Austenitic stainless steel
Design pressure:	
Shell side	150 psig
Tube side	346 psig
Design temperature:	
Shell side	200°F
Tube side	300°F

Containment Spray Headers and Nozzles

Nozzle quantity	396
Material	Austenitic Stainless Steel
Design flow rate, per nozzle, gpm	15.2
Pressure drop, per nozzle, psi	40

* Maximum fluid temperature within the mixing chamber during the injection phase is 100°F due to the exothermal reaction between sodium hydroxide and boric acid.

TABLE 6.2-76 HEAT EXCHANGER PERFORMANCE DATA

Containment Spray Heat Exchanger

Type	Vertical U-tube
Number	2
Capacity (each)	96.7×10^6 Btu/hr
Heat Transfer Area (each)	3468 ft^2 (Effective)
Units Overall Heat Transfer Coefficient	431 (Service) 758 (Clean)
Tube (Hot) side flow rate (each)	1.5×10^6 lb/hr
Shell (Cold) side flow rate (each)	2.35×10^6 lb/hr
Tube side inlet temperature	244.8°F
Tube side outlet temperature	180.8°F
Shell side inlet temperature	119.9°F [(a)]
Shell side outlet temperature	161.5°F

[(a)] For the design basis accident, this equipment will experience a 6°F cooling water supply temperature transient (120°F to 126°F to 120°F) over a 1½ hour period, or 3°F for a period of 5 hours (cooling tower operation), which will have an insignificant impact on analysis of piping stresses.

TABLE 6.2-77 CONTAINMENT COOLING - ACTIVE COMPONENT FAILURE ANALYSIS

Component	Failure	Comments and Consequences
Suction or discharge valve for RHR pump	Fails to open	Two parallel paths; only one required. *
Suction or discharge valve for spray pump	Fails to open	Two parallel paths; only one required. *
RHR pump	Fails to start; mechanical or loss of power	Two parallel paths; only one required. *
Spray pump	Fails to start; mechanical or loss of power	Two parallel paths; only one required. *
Containment penetration line	Cracked or clogged	Two parallel paths; only one required. *
Spray nozzles	Clogged	The strainer in sump will prevent large particles from entering spray system. 198 nozzles/train ensure no significant decreases of flow.
Automatic valve between spray additive tank and RWST	Fails to open	Two valves in parallel; each capable of permitting full flow.

* 1 containment spray heat exchanger and 1 residual heat removal heat exchanger in operation provide 100% of minimum required cooling

TABLE 6.2-78 DELETED

TABLE 6.2-79 CODES, STANDARDS AND GUIDES APPLICABLE TO THE CONTAINMENT SPRAY SYSTEM

A. USNRC Regulatory Guides

Title	Reg. Guide No.
Net Positive Suction Head for Emergency Core Cooling and Containment Heat Removal System Pumps	1.1
Assumptions Used for Evaluating the Potential Radiological Consequences of a LOCA for PWRs	1.4
Periodic Testing of Protection System Actuation Functions	1.22
Quality Group Classification and Standards	1.26
Seismic Design Classification	1.29
Control of Stainless Steel Welding	1.31
Protection Against Pipe Whip Inside Containment	1.46
Bypassed and Inoperable Status Indication for Nuclear Power Plant Safety Systems	1.47
Design Limits and Loading Combinations for Seismic Category I Fluid System Components	1.48
In-service Inspection of ASME Code Class 2 and 3 Nuclear Power Plant Components	1.51
Application of the Single Failure Criterion to Nuclear Power Protection Systems	1.53
Manual Initiation of Protection Actions	1.62
Standard Format and Content of Safety Analysis Reports for Nuclear Power Plants LWR Edition	1.70
Sumps for Emergency Core Cooling and Containment Spray Systems	1.82
Information Relevant to Ensuring that Occupational Radiation Exposures at Nuclear Power Station will be as Low as is Reasonably Achievable	8.8

B. 10 CFR Part 100, Reactor Site Criteria

C. American Society of Mechanical Engineers (ASME) Boiler and Pressure Vessel Code:

Material Specifications	Section II
Nuclear Power Plant Components	Section III
Nondestructive Examination	Section V
Pressure Vessels Division I	Section VIII
Welding and Brazing Qualifications	Section IX
Rules for In-service Inspection of Nuclear Power Plant	Section XI

D. Institute of Electrical and Electronics Engineers (IEEE) Standards:

Title	Std. No.
Criteria for Protection Systems for Nuclear Power Generating Stations	IEEE-279
Criteria for Class 1E Power Systems for Nuclear Power Generating Stations	IEEE-308
Qualifying Class 1E Electric Equipment for Nuclear Power Generating Stations	IEEE-323
Installation, Inspection and Testing Requirements for Instrumentation and Electric Equipment During the Construction of Nuclear Power Generating Stations	IEEE-336
Trial-Use Criteria for the Periodic Testing of Nuclear Power Generating Station Protection Systems	IEEE-338
Trial-Use Guide for Seismic Qualification of Class I Electric Equipment for Nuclear Power Generating Stations	IEEE-344
Trial-Use Guide for General Principles for Reliability Analysis of Nuclear Power Generating Station Protection Systems	IEEE-352
Trial-Use Guide for the Application of the Single-Failure Criterion to Nuclear Power Generating Station Protection Systems	IEEE-379

E. American National Standard Institute (ANSI) Standards:

Pipe Threads	B2.1
Steel Pipe Flanges and Flanged Fittings	B16.5
Steel Butt Welding Fittings	B16.9
Steel Weld Fittings	B16.11
Butt Welding Ends	B16.25
Power Piping	B31.1
Nuclear Safety Criteria for Design of Stationary Pressurized Water Reactor Plants	N18.2
Protective Coatings for Light Water Nuclear Reactor Containment Facilities	N101.2

F. Tubular Exchanger Manufacturers Association (TEMA)

Mechanical Standards TEMA Class "R" Heat Exchangers

G. Hydraulic Institute

Standard for Rotary, Reciprocating, and Centrifugal Pumps

H. American Institute of Steel Construction (AISC)

Steel Construction Manual

I. American Society for Testing and Materials (ASTM)

Materials Specification

J. Nuclear Energy Institute (NEI)

	NEI No.
Pressurized Water Reactor Sump Performance Evaluation Methodology	04-07

TABLE 6.2-80 CONTAINMENT SPRAYED VOLUME

		Volume (10^6 ft^3)
a)	Bldg. volume above elevation 25'-0"	
	Cylinder	(+) 1.447
	Dome	(+) 0.718
b)	Annulus below elevation 25'-0"	(+) 0.132
c)	Refueling Canal	(+) 0.045
d)	Pressurizer cubicle above elevation 25'-0"	(-) 0.005
e)	Steam generators above elevation 25'-0"	(-) 0.015
f)	Missile shield shadow	(-) 0.010
g)	Equipment hatch	(-) 0.002
	Total Sprayed Volume	2.310

TABLE 6.2-81 EFFECT OF DROP SIZE ON SPRAY EFFICIENCY

Drop Size (microns)	% Drops of Smaller Size	Terminal Velocity (fps)	Residence Time (sec)	Equil. Time (sec)	Distance Traveled (ft)
500	68.9	6.7	20.0	0.5	< 3.3
1000	96	12.8	10.5	1.7	< 21.7
1500	99.99	17.9	7.5	3.8	< 68.0

TABLE 6.2-82 CONTAINMENT ENCLOSURE DESIGN AND PERFORMANCE DATA

Free Volume, ft^3	
Containment Enclosure Annulus	524,344
Electrical Penetration Areas	84,035
Mechanical Penetration Areas	70,320
RHR & SI Equipment Vaults	102,816
Containment Enclosure Equipment Area	92,568
Charging Pump Areas	12,000
Pressure, Inches H_2O gauge	
Normal Operation	0
Post Accident	-0.25*
Temperature, °F	
Normal Operation	50-104
Post Accident, Maximum	148
Exhaust Fans	
Number	2
Type	Centrifugal
Nominal Flow, scfm	2,000
Filters	
Number of Trains	2
Moisture Separator, per train	1
HEPA, per train	2
Carbon Adsorber, per train	1
Thickness of Containment, in.	42-54
Thickness of Containment Enclosure, in.	15-36
Containment Wall Characteristics	
Coefficient of Linear Expansion, in./in.-°F	$6.5x10^{-6}$
Modulus of Elasticity, psi	$3.12x10^6$ (3000 psi concrete)
	$3.61x10^6$ (4000 psi concrete)
Thermal Conductivity, Btu/hr-ft-°F	0.83
Thermal Capacitance, Btu/ft3-°F	29.0

* A negative pressure of 0.685 iwg has to be established at the 21' -0" elevation of the Containment Enclosure Equipment Area to ensure that the required design negative pressure differential of 0.25 iwg is established at the top of the Containment Enclosure Annulus for the full range of design outside ambient temperatures.

TABLE 6.2-83 CONTAINMENT ISOLATION SYSTEM DESIGN INFORMATION

Cnt. Penetration (8)	Appl. Gen. Design Criteria or Reg. Guide (1)	System Name	Fluid Contained	Line Size (in.)	Essential Sys.	Pot. Bypass or Through-Line Leakage	Figure 6.2-91 Sheet	Isolation Valve Number	Valve Loc Inside/ Outside (2)	Type C Tests	Length of Pipe (ft-in) (3)	Valve		Valve Position (5)				Containment Isolation Signal (6)	Valve Close Time (Sec) (7)	Power Source Bus A or B	Position Indication
												Type	Operator	Normal	Shutdown	Post Accident	Power Failure				
X-1	II	Main Steam (Loop I)	Secondary Steam	30	Yes	No	9	30"x24"x30"-MS-V86	O	No	68-6	Gate	Elec-Hyd	O	CL	CL	FAI	MSIS, CSW	5(4)	A&B	Yes
				6				6"-MS-PV3001	O	No	68-9	Globe	Pneumatic	CL	-	CL	FC	CSW	70(4)	A	Yes
				4				4"-MS-V393	O	No	65-6	Globe	Pneumatic	CL	CL	O	FO	CSW	20(4)	A	Yes
				6				6"x10"-MS-V6,7,8,9,10	O	No	60-0	Safety	Self	CL	CL	CL	-	-	-	-	No
				4				4"x2-1/2"-MS-V204	O	No	72-0	Globe	Motor	LC	LC	LC	FAI	MSIS, CSW(13)	30(4)	A	Yes
				1				1"-MSD-V44	O	No	24-7	Globe	Motor	O	CL	CL	FAI	MSIS, CSW	25(4)	A	-
X-2	II	Main Steam (Loop II)	Secondary Steam	30	Yes	No	9	30"x24"x30"-MS-V88	O	No	71-9	Gate	Elec-Hyd	O	CL	CL	FAI	MSIS, CSW	5(4)	A&B	Yes
				6				6"-MS-PV3002	O	No	66-9	Globe	Pneumatic	CL	-	CL	FC	CSW	70(4)	B	Yes
				4				4"-MS-V394	O	No	68-8	Globe	Pneumatic	CL	CL	O	*FO	CSW	20(4)	A&B	Yes
				6				6"x10"-MS-V22.23, 24,25,26	O	No	86-0	Safety	Self	CL	CL	CL	-	-	-	-	No

* On Train A control power failure, valve position is FC; On Train B control power failure, valve position is FO; On instrument air failure, valve position is FO.

Cnt. Penetration (8)	Appl. Gen. Design Criteria or Reg. Guide (1)	System Name	Fluid Contained	Line Size (in.)	Essential Sys.	Pot. Bypass or Through-Line Leakage	Figure 6.2-91 Sheet	Isolation Valve Number	Valve Loc Inside/ Outside (2)	Type C Tests	Length of Pipe (ft-in) (3)	Valve		Valve Position (5)				Containment Isolation Signal (6)	Valve Close Time (Sec) (7)	Power Source Bus A or B	Position Indication
												Type	Operator	Normal	Shutdown	Post Accident	Power Failure				
				4				4"x2-1/2"-MS-V205	O	No	112-0	Globe	Motor	LC	LC	LC	FAI	MSIS, CSW(13)	30(4)	A	Yes
				1				1"-MSD-V45	O	No	24-7	Globe	Motor	O	CL	CL	FAI	MSIS, CSW	25(4)	A	-
X-3	II	Main Steam (Loop III)	Secondary Steam	30	Yes	No	9	30"x24"x30"-MS-V90	O	No	77-7	Gate	Elec-Hyd	O	CL	CL	FAI	MSIS, CSW	5(4)	A&B	Yes
				6				6"-MS-PV3003	O	No	74-7	Globe	Pneumatic	CL	-	CL	FC	CSW	70(4)	A	Yes
				6				6"x10"-MS-V36,37,38,39,40	O	No	72-0	Safety	Self	CL	CL	CL	-	-	-	-	No
				4				4"x2-1/2"-MS-V206	O	No	82-0	Globe	Motor	LC	LC	LC	FAI	MSIS, CSW(13)	30(4)	A	Yes
				1				1"-MSD-V46	O	No	18-5	Globe	Motor	CL	CL	CL	FAI	MSIS, CSW	25(4)	A	-
X-4	II	Main Steam (Loop IV)	Secondary Steam	30	Yes	No	9	30"x24"x30"-MS-V92	O	No	83-5	Gate	Elec-Hyd	O	CL	CL	FAI	MSIS, CSW	5(4)	A&B	Yes
				6				6"-MS-PV3004	O	No	78-7	Globe	Pneumatic	CL	-	CL	FC	CSW	70(4)	B	Yes
				6				6"X10"-MS-V50,51,52,53,54	O	No	72-0	Safety	Self	CL	CL	CL	-	-	-	-	No
				4				4"x2-1/2"-MS-V207	O	No	82-5	Globe	Motor	LC	LC	LC	FAI	MSIS, CSW(13)	30(4)	A	Yes
				1				1"-MSD-V47	O	No	18-5	Globe	Motor	CL	CL	CL	FAI	MSIS, CSW	25(4)	A	-

Cnt. Penetration (8)	Appl. Gen. Design Criteria or Reg. Guide (1)	System Name	Fluid Contained	Line Size (in.)	Essential Sys.	Pot. Bypass or Through-Line Leakage	Figure 6.2-91 Sheet	Isolation Valve Number	Valve Loc Inside/ Outside (2)	Type C Tests	Length of Pipe (ft-in) (3)	Valve		Valve Position (5)				Containment Isolation Signal (6)	Valve Close Time (Sec) (7)	Power Source Bus A or B	Position Indication
												Type	Operator	Normal	Shutdown	Post Accident	Power Failure				
X-5	II	Main Feed Water (Loop I)	Secondary Water	18	Yes	No	9	18"-FW-V30	O	No	13-7	Gate	Pneu/ Elec-Hyd	O	CL	CL	FAI	S, RXT, SG, CSW	10(4)	A&B	Yes
				4				4"-FW-V76	O	No	26-7	Stop/ Check	Manual/ Self	CL	CL	O	-	-	10	-	No
X-6	II	Main Feed Water (Loop II)	Secondary Water	18	Yes	No	9	18"-FW-V39	O	No	14-9	Gate	Pneu/ Elec-Hyd	O	CL	CL	FAI	S, RXT, SG, CSW	10(4)	A&B	Yes
				4				4"-FW-V82	O	No	18-0	Stop/ Check	Manual/ Self	CL	CL	O	-	-	10	-	No
X-7	II	Main Feed Water (Loop III)	Secondary Water	18	Yes	No	9	18"-FW-V48	O	No	28-6	Gate	Pneu/ Elec-Hyd	O	CL	CL	FAI	S ,RXT, SG, CSW	10(4)	A&B	Yes
				4				4"-FW-V88	O	No	20-6	Stop/ Check	Manual/ Self	CL	CL	O	-	-	10	-	No
X-8	II	Main Feed Water (Loop IV)	Secondary Water	18	Yes	No	9	18"-FW-V57	O	No	27-7	Gate	Pneu/ Elec-Hyd	O	CL	CL	FAI	S, RXT, SG, CSW	10(4)	A&B	Yes
				4				4"-FW-V94	O	No	20-6	Stop/ Check	Manual/ Self	CL	CL	O	-	-	10	-	No
X-9	E	Residual Heat Removal Pump Suction (Loop I/ Hot Leg)	Reactor Coolant	12	No	No	2	12"-RC-V23	I	Yes	21-7	Gate	Motor	LC	O	CL	FAI	CSW	120(4)	A	Yes
				3				3"x4"-RC-V24	I	Yes	8-4	Relief	Self	-	-	-	-	-	-	-	No

Cnt. Penetration (8)	Appl. Gen. Design Criteria or Reg. Guide (1)	System Name	Fluid Contained	Line Size (in.)	Essential Sys.	Pot. Bypass or Through-Line Leakage	Figure 6.2-91 Sheet	Isolation Valve Number	Valve Loc Inside/ Outside (2)	Type C Tests	Length of Pipe (ft-in) (3)	Valve		Valve Position (5)				Containment Isolation Signal (6)	Valve Close Time (Sec) (7)	Power Source Bus A or B	Position Indication
												Type	Operator	Normal	Shutdown	Post Accident	Power Failure				
X-10	E	Residual Heat Removal Pump Suction (Loop IV/ Hot Leg)	Reactor Coolant	12	No	No	2	12"-RC-V88	I	Yes	21-0	Gate	Motor	LC	O	CL	FAI	CSW	120(4)	A	Yes
				3				3"x4"-RC-V89	I	Yes	9-0	Relief	Self	-	-	-	-	-	-	-	No
X-11	I,E	Residual Heat Removal	Borated Water	8	Yes	No	4	8"-RH-V14	O	No	0-8	Gate	Motor	O	CL	O	FAI	CSW	15(4)	A	Yes
				6				6"-RH-V31	I	No	106-2	Check	Self	-	-	-	-	-	-	-	No
				6				6"-RH-V15	I	No	109-5	Check	Self	-	-	-	-	-	-	-	No
				3/4				3/4"-RH-V28	I	No	35-0	Globe	Pneumatic	CL	CL	CL	FC	CSW, T	10	B	Yes
X-12	I,E	Residual Heat Removal	Borated Water	8	Yes	No	4	8"-RH-V26	O	No	2-8	Gate	Motor	O	CL	O	FAI	CSW	15(4)	B	Yes
				6				6"-RH-V30	I	No	130-6	Check	Self	-	-	-	-	-	-	-	No
				6				6"-RH-V29	I	No	128-1	Check	Self	-	-	-	-	-	-	-	No
				3/4				3/4"-RH-V27	I	No	34-6	Globe	Pneumatic	CL	CL	CL	FC	CSW, T	10	A	Yes

Cnt. Penetration (8)	Appl. Gen. Design Criteria or Reg. Guide (1)	System Name	Fluid Contained	Line Size (in.)	Essential Sys.	Pot. Bypass or Through-Line Leakage	Figure 6.2-91 Sheet	Isolation Valve Number	Valve Loc Inside/ Outside (2)	Type C Tests	Length of Pipe (ft-in) (3)	Valve		Valve Position (5)				Containment Isolation Signal (6)	Valve Close Time (Sec) (7)	Power Source Bus A or B	Position Indication
												Type	Operator	Normal	Shutdown	Post Accident	Power Failure				
X-13	I,E	Residual Heat Removal	Borated Water	8	Yes	No	3	8"-RH-V32	O	No	6-6	Gate	Motor	CL	CL	CL	FAI	CSW	40(4)	B	Yes
				3/4				3/4"-RH-V49	I	No	34-1	Globe	Pneumatic	CL	CL	CL	FC	CSW, T	10	A	Yes
				8				8"-RH-V70	O	No	6-5	Gate	Motor	CL	CL	CL	FAI	CSW	40(4)	A	Yes
				8				8"-RH-V50	I	No	53-5	Check	Self	-	-	-	-	-	-	-	No
				8				8"-RH-V51	I	No	52-11	Check	Self	-	-	-	-	-	-	-	No
X-14	I,E	Cont. Spray	Borated Water	8	Yes	No	7	8"-CBS-V11	O	Yes	2-8	Gate	Motor	CL	CL	O	FAI	CSW, CSAS	13(4)	A	Yes
				8				8"-CBS-V12	I	Yes	4-4	Check	Self	-	-	-	-	-	-	-	No
X-15	I,E	Cont. Spray	Borated Water	8	Yes	No	7	8"-CBS-V17	O	Yes	2-8	Gate	Motor	CL	CL	O	FAI	CSW, CSAS	13(4)	B	Yes
				8				8"-CBS-V18	I	Yes	4-4	Check	Self	-	-	-	-	-	-	-	No
X-16	I	Cont. On-Line Purge (Exhaust)	Cont. Atmosphere	8	No	Yes	10	8"-COP-V4	O	Yes	2-9	Butterfly	Pneumatic	CL	O	CL	FC	CVIS, CSW	2	A	Yes
				8				8"-COP-V3	I	Yes	1-4	Butterfly	Pneumatic	CL	O	CL	FC	CVIS, CSW	2	B	Yes

Cnt. Penetration (8)	Appl. Gen. Design Criteria or Reg. Guide (1)	System Name	Fluid Contained	Line Size (in.)	Essential Sys.	Pot. Bypass or Through-Line Leakage	Figure 6.2-91 Sheet	Isolation Valve Number	Valve Loc Inside/ Outside (2)	Type C Tests	Length of Pipe (ft-in) (3)	Valve		Valve Position (5)				Containment Isolation Signal (6)	Valve Close Time (Sec) (7)	Power Source Bus A or B	Position Indication
												Type	Operator	Normal	Shutdown	Post Accident	Power Failure				
X-17	I	Equip. Vent (RCDT)	Vent Gas	2 2	No	Yes	7	2"-VG-FV-1661 2"-VG-FV-1712	O I	Yes Yes	12-5 13-7	Globe Globe	Solenoid Solenoid	O O	O O	CL CL	FC FC	T,CSW T,CSW	2 2	A B	Yes Yes
X-18	I	Cont. On-Line Purge (Supply)	Cont. Atmosphere	8 8	No	Yes	10	8"-COP-V1 8"-COP-V2	O I	Yes Yes	3-0 1-4	Butterfly Butterfly	Pneumatic Pneumatic	CL CL	O O	CL CL	FC FC	CVIS,CSW CVIS,CSW	2 2	A B	Yes Yes
X-19	I	Post Accident Monitoring Sample	Borated Water	1/2 1/2	No	Yes	1	1/2"-SS-FV-2857 1/2"-SS-V273	O I	Yes Yes	6-8 3-5	Globe Check	Solenoid Self	CL -	CL -	CL (11) -	FC -	T,CSW -	2 -	B -	Yes No
X-20	I	Primary Component Cooling Water Loop A (Supply)	Demineralized Water (Corrosion Inhibitor)	12 12 1-1/2	No	Yes	6	12"-CC-V168 12"-CC-V57 1-1/2"x2"-CC-V845	O I I	Yes Yes Yes	5-6 36-5 31-4	Butterfly Butterfly Relief	Pneumatic Pneumatic Self	O O -	O O -	CL CL -	FC** FC** -	P,CSW P,CSW -	10 10 -	B A -	Yes Yes No
X-21	I	Primary Component Cooling Water Loop A (Return)	Demineralized Water (Corrosion Inhibitor)	12 12 1-1/2	No	Yes	6	12"-CC-V122 12"-CC-V121 1-1/2"x2"-CC-V410	O I I	Yes Yes Yes	4-11 28-10 23-4	Butterfly Butterfly Relief	Pneumatic Pneumatic Self	O O -	O O -	CL CL -	FC** FC** -	P,CSW P,CSW -	10 10 -	B A -	Yes Yes No
X-22	I	Primary Component Cooling Water Loop B (Return)	Demineralized Water (Corrosion Inhibitor)	12 12 1-1/2	No	Yes	6	12"-CC-V257 12"-CC-V256 1-1/2"x2"-CC-V474	O I I	Yes Yes Yes	7-9 32-11 29-4	Butterfly Butterfly Relief	Pneumatic Pneumatic Self	O O -	O O -	CL CL -	FC** FC** -	P,CSW P,CSW -	10 10 -	A B -	Yes Yes No
X-23	I	Primary Component Cooling Water Loop B (Supply)	Demineralized Water (Corrosion Inhibitor)	12 12 1-1/2	No	Yes	6	12"-CC-V175 12"-CC-V176 1-1/2"x2"-CC-V840	O I I	Yes Yes Yes	9-4 52-5 44-2	Butterfly Butterfly Relief	Pneumatic Pneumatic Self	O O -	O O -	CL CL -	FC** FC** -	P,CSW P,CSW -	14 14 -	A B -	Yes Yes No
X-24	I,E	Safety Injection (Hi Head)	Borated Water	3 4 4 3/4	Yes	- No No -	3	3"-SI-V140 4"-SI-V138 4"-SI-V139 3/4"-SI-V158	I O O I	No No No No	5-0 7-8 9-2 12-6	Check Gate Gate Globe	Self Motor Motor Pneumatic	CL CL CL CL	CL CL CL CL	O O O CL	- FAI FAI FC	- CSW,S CSW,S CSW,T	- 10(4) 10(4) 10	- A B B	No Yes Yes Yes
X-25	I,E	Safety Injection (Hi Head)	Borated Water	4 2 2 3/4	Yes	No	3	4"-SI-V102 2"-SI-V106 2"-SI-V110 3/4"-SI-V160	O I I I	No No No No	2-0 74-2 51-7 42-3	Gate Check Check Globe	Motor Self Self Pneumatic	CL - - CL	CL - - CL	O - - CL	FAI - - FC	CSW - - T,CSW	12(4) - - 10	A - - B	Yes No No Yes

** On electric power failure, valve position is FAI; On instrument air failure, valve position is FC.

Cnt. Penetration (8)	Appl. Gen. Design Criteria or Reg. Guide (1)	System Name	Fluid Contained	Line Size (in.)	Essential Sys.	Pot. Bypass or Through-Line Leakage	Figure 6.2-91 Sheet	Isolation Valve Number	Valve Loc Inside/ Outside (2)	Type C Tests	Length of Pipe (ft-in) (3)	Valve		Valve Position (5)				Containment Isolation Signal (6)	Valve Close Time (Sec) (7)	Power Source Bus A or B	Position Indication
												Type	Operator	Normal	Shutdown	Post Accident	Power Failure				
X-26	I,E	Safety Injection (Hi Head)	Borated Water	4	Yes	No	3	4"-SI-V77	O	No	10-10	Gate	Motor	CL	CL	O	FAI	CSW	12(4)	B	Yes
				2				2"-SI-V81	I	No	224-6	Check	Self	-	-	-	-	-	-	-	No
				2				2"-SI-V86	I	No	182-8	Check	Self	-	-	-	-	-	-	-	No
				3/4				3/4"-SI-V134	I	No	62-1	Globe	Pneumatic	CL	CL	CL	FC	CSW,T	10	A	Yes
X-27	I,E	Safety Injection (Hi Head)	Borated Water	4	Yes	No	4	4"-SI-V114	O	No	3-3	Gate	Motor	O	O	O	FAI	CSW	10(4)	A	Yes
				2				2"-SI-V118	I	No	75-0	Check	Self	-	-	-	-	-	-	-	No
				2				2"-SI-V122	I	No	144-4	Check	Self	-	-	-	-	-	-	-	No
				2				2"-SI-V126	I	No	72-7	Check	Self	-	-	-	-	-	-	-	No
				2				2"-SI-V130	I	No	108-2	Check	Self	-	-	-	-	-	-	-	No
				3/4				3/4"-SI-V131	I	No	33-11	Globe	Pneumatic	CL	CL	CL	FC	CSW,T	10	B	Yes
X-28	I,E	Chemical & Volume Control (RCP 1A Seal Water)	Borated Water	2	(10)	No	5	2"-CS-V166	O	No	3-9	Globe	Motor	O	O	O	FAI	CSW	10(4)	A	Yes
				2				2"-CS-V4	I	No	2-0	Check	Self	-	-	-	-	-	-	-	No
X-29	I,E	Chemical & Volume Control (RCP 1B Seal Water)	Borated Water	2	(10)	No	5	2"-CS-V162	O	No	2-10	Globe	Motor	O	O	O	FAI	CSW	10(4)	A	Yes
				2				2"-CS-V20	I	No	2-0	Check	Self	-	-	-	-	-	-	-	No
X-30	I,E	Chemical & Volume Control (RCP 1C Seal Water)	Borated Water	2	(10)	No	5	2"-CS-V158	O	No	3-9	Globe	Motor	O	O	O	FAI	CSW	10(4)	A	Yes
				2				2"-CS-V36	I	No	6-3	Check	Self	-	-	-	-	-	-	-	No
X-31	I,E	Chemical & Volume Control (RCP 1D Seal Water)	Borated Water	2	(10)	No	5	2"-CS-V154	O	No	3-3	Globe	Motor	O	O	O	FAI	CSW	10(4)	A	Yes
				2				2"-CS-V52	I	No	3-6	Check	Self	-	-	-	-	-	-	-	No
X-32	I	Equipment and Floor Drainage (RCDT)	Mildly Contaminated Waste Water	3	No	Yes	7	3"-WLD-V82	O	Yes	1-0	Globe	Pneumatic	O	O	CL	FC	T,CSW	10	A	Yes
				3				3"-WLD-V81	I	Yes	14-6	Globe	Pneumatic	O	O	CL	FC	T,CSW	10	B	Yes
				1-1/2				1-1/2"x2"-WLD-V213	I	Yes	13-4	Relief	Self	-	-	-	-	-	-	-	No
X-33	I,E	Chemical & Volume Control (Charging)	Borated Water	3	No	No	5	3"-CS-V143	O	No	3-5	Gate	Motor	O	O	CL	FAI	S,CSW	10	B	Yes
				3				3"-CS-V144	I	No	4-7	Check	Self	-	-	-	-	-	-	-	No

Cnt. Penetration (8)	Appl. Gen. Design Criteria or Reg. Guide (1)	System Name	Fluid Contained	Line Size (in.)	Essential Sys.	Pot. Bypass or Through-Line Leakage	Figure 6.2-91 Sheet	Isolation Valve Number	Valve Loc Inside/ Outside (2)	Type C Tests	Length of Pipe (ft-in) (3)	Valve		Valve Position (5)				Containment Isolation Signal (6)	Valve Close Time (Sec) (7)	Power Source Bus A or B	Position Indication
												Type	Operator	Normal	Shutdown	Post Accident	Power Failure				
X-34	I	Equipment and Floor Drainage (RC Sump)	Mildly Contaminated Waste Water	2 2 3/4	No	Yes	6	2"-WLD-FV-8331 2"-WLD-FV-8330 3/4"x1"-WLD-V209	I O I	Yes Yes Yes	17-3 3-0 17-1	Globe Globe Relief	Solenoid Solenoid Self	O O -	O O -	CL CL -	FC FC -	T,CSW T,CSW -	2 2 -	B A -	Yes Yes No
X-35A	I	Safety Injection (Test Line)	Borated Water	3/4 3/4 3/4 3/4	No	Yes	3	3/4"-SI-V70 3/4"-SI-V62 3/4"x1"-SI-V247 3/4"-SI-V157	I O I O	Yes Yes Yes Yes	8-10 3-11 10-0 59-8	Globe Globe Relief Globe	Pneumatic Pneumatic Self Pneumatic	CL CL - CL	CL CL - CL	CL CL - CL	FC FC - FC	T,CSW T,CSW - T,CSW	10 10 - 10	B A - A	Yes Yes No Yes
X-35B	I	Reactor Coolant (Pressurizer Steam/ Liquid Sample)	Steam & Borated Water	1/2 1/2 1/2 3/4	No	Yes	8	1/2"-RC-FV-2830 1/2"-RC-FV-2831 1/2"-RC-FV-2840 3/4"x1"-RC-V312	I I O I	Yes Yes Yes Yes	61-5 63-4 4-10 69-8	Globe Globe Globe Relief	Solenoid Solenoid Solenoid Self	CL CL CL -	CL CL CL -	CL CL CL -	FC FC FC -	T,CSW T,CSW T,CSW -	2 2 2 -	B B A -	Yes Yes Yes No
X-35C	I	Reactor Coolant (RC Sample Loop I)	Borated Water	1/2 1/2 1/2 3/4	No	Yes	8	1/2"-RC-FV-2874 1/2"-RC-FV-2894 1/2"-RC-FV-2832 3/4"x1"-RC-V314	O O I I	Yes Yes Yes Yes	5-1 5-0 84-9 75-11	Globe Globe Globe Relief	Solenoid Solenoid Solenoid Self	CL LC CL -	CL LC CL -	CL (11) LC (11) CL (11) -	FC FC FC -	T,CSW CSW T,CSW -	2 2(4) 2 -	B A A -	Yes Yes Yes No
X-35D	I	Reactor Coolant (RC Sample Loop III)	Borated Water	½ 1/2 1/2 3/4	No	Yes	8	1/2"-RC-FV-2876 1/2"-RC-FV-2896 1/2"-RC-FV-2833 3/4"x1"-RC-V337	O O I I	Yes Yes Yes Yes	7-5 11-10 67-6 75-4	Globe Globe Globe Relief	Solenoid Solenoid Solenoid Self	CL LC CL -	CL LC CL -	CL (11) LC (11) CL (11) -	FC FC FC -	T,CSW CSW T,CSW -	2 2(4) 2 -	A B B -	Yes Yes Yes No
X-36A	I	Demineralized Water	DM Water	1 1 1-1/2	No	Yes	2	1"-DM-V4 1"-DM-V5 1-1/2"x2"-DM-V18	O I I	Yes Yes Yes	2-3 16-5 15-10	Gate Gate Relief	Manual Manual Self	LC LC -	- - -	- - -	- - -	- - -	- - -	- - -	No No No
X-36B	I	Nitrogen Gas (H1 Pressure)	N_2 Gas	1 1	No	Yes	4	1"-NG-V13 1"-NG-V14	O I	Yes Yes	3-9 8-11	Globe Globe	Pneumatic Pneumatic	CL CL	CL CL	CL CL	FC FC	T,CSW T,CSW	10 10	B A	Yes Yes
X-36C	I	Reactor Makeup Water	DM Water	3 3	No	Yes	1	3"-RMW-V30 3"-RMW-V29	O I	Yes Yes	2-4 8-11	Globe Check	Pneumatic Self	O -	CL -	CL -	FC -	T,CSW -	10 -	B -	Yes No

Cnt. Penetration (8)	Appl. Gen. Design Criteria or Reg. Guide (1)	System Name	Fluid Contained	Line Size (in.)	Essential Sys.	Pot. Bypass or Through-Line Leakage	Figure 6.2-91 Sheet	Isolation Valve Number	Valve Loc Inside/ Outside (2)	Type C Tests	Length of Pipe (ft-in) (3)	Valve		Valve Position (5)				Containment Isolation Signal (6)	Valve Close Time (Sec) (7)	Power Source Bus A or B	Position Indication
												Type	Operator	Normal	Shutdown	Post Accident	Power Failure				
X-37A	I	Chemical & Volume Control (Letdown)	Borated Water	3 3	No	Yes	5	3"-CS-V150 3"-CS-V149	O I	Yes Yes	3-5 113-0	Globe Gate	Pneumatic Motor	O O	O O	CL CL	FC FAI	T,CSW T,CSW	10 10	B A	Yes Yes
X-37B	I	Chemical & Volume Control (Excess Letdown)	Borated Water	2 2 3/4	No	Yes	5	2"-CS-V168 2"-CS-V167 3/4"x1"-CS-V794	I O I	Yes Yes Yes	7-10 4-10 8-1	Globe Globe Relief	Motor Motor Self	O O -	O O -	CL CL -	FAI FAI -	T,CSW T,CSW -	10 10 -	B A -	Yes Yes No
X-38/ 76A	I	Fire Protection	Dry	4 4	No	Yes	2	4"-FP-V592 4"-FP-V588	O I	Yes Yes	7-11 3-0	Gate Check	Manual Self	LC -	- -	- -	- -	- -	- -	- -	No No
X-38/ 76B	I	Combustible Gas Control	Containment Atmosphere	10 10 2 2	No	Yes	8	10"-CGC-V46 10"-CGC-V45 2"-CGC-V43 2"-CGC-V44	I O O O	Yes Yes Yes Yes	2-7 47-7 45-3 46-9	Check Gate Gate Gate	Self Manual Manual Manual	- LC LC LC	- - - -	- - - -	- - - -	- - - -	- - - -	- - - -	No No No No
X-39	I	Spent Fuel Pool Cooling and Cleanup	Dry	2 2 3/4	No	Yes	2	2"-SF-V86 2"-SF-V87 3/4"x1"-SF-V101	I O I	Yes Yes Yes	3-11 3-8 2-8	Gate Gate Relief	Manual Manual Self	LC LC -	- - -	- - -	- - -	- - -	- - -	- - -	No No No
X-40A	I	Nitrogen Gas (Low Pressure)	N_2 Gas	1 1	No	Yes	1	1"-NG-FV-4609 1"-NG-FV-4610	O I	Yes Yes	6-1 8-3	Globe Globe	Solenoid Solenoid	CL CL	CL CL	CL CL	FC FC	T,CSW T,CSW	2 2	A B	Yes Yes
X-40B	I	PRT Sample	Vent Gas	1/2 1/2	No	Yes	8	1/2"-RC-FV-2836 1/2"-RC-FV-2837	I O	Yes Yes	8-3 5-4	Globe Globe	Solenoid Solenoid	CL CL	CL CL	CL CL	FC FC	T,CSW T,CSW	2 2	B A	Yes Yes
X-41		Spare																			
X-42		Spare																			
X-43A		Spare																			

Cnt. Penetration (8)	Appl. Gen. Design Criteria or Reg. Guide (1)	System Name	Fluid Contained	Line Size (in.)	Essential Sys.	Pot. Bypass or Through-Line Leakage	Figure 6.2-91 Sheet	Isolation Valve Number	Valve Loc Inside/ Outside (2)	Type C Tests	Length of Pipe (ft-in) (3)	Valve		Valve Position (5)				Containment Isolation Signal (6)	Valve Close Time (Sec) (7)	Power Source Bus A or B	Position Indication
												Type	Operator	Normal	Shutdown	Post Accident	Power Failure				
X-43B		Spare																			
X-43C		Spare																			
X-43D		Spare																			
X-43E		Spare																			
X-44		Spare																			
X-45		Spare																			
X-46		Spare																			
X-47A		Spare																			
X-47B		Spare																			
X-47C		Spare																			
X-47D		Spare																			

Cnt. Penetration (8)	Appl. Gen. Design Criteria or Reg. Guide (1)	System Name	Fluid Contained	Line Size (in.)	Essential Sys.	Pot. Bypass or Through-Line Leakage	Figure 6.2-91 Sheet	Isolation Valve Number	Valve Loc Inside/ Outside (2)	Type C Tests	Length of Pipe (ft-in) (3)	Valve		Valve Position (5)				Containment Isolation Signal (6)	Valve Close Time (Sec) (7)	Power Source Bus A or B	Position Indication
												Type	Operator	Normal	Shutdown	Post Accident	Power Failure				
X-48A	II	Primary Component Cooling Water Thermal Barrier Loop B (Supply)	Demineralized Water (Corrosion Inhibitor)	6	No	No	6	6"-CC-V1092	O	No	5-5	Butterfly	Motor	O	O	O	FAI	CSW	-	B	Yes
X-48B	II	Primary Component Cooling Water Thermal Barrier Loop B (Return)	Demineralized Water (Corrosion Inhibitor)	6	No	No	6	6"-CC-V1095	O	No	5-1	Butterfly	Motor	O	O	O	FAI	CSW	-	B	Yes
X-49A	II	Primary Component Cooling Water Thermal Barrier Loop A (Supply)	Demineralized Water (Corrosion Inhibitor)	6	No	No	6	6"-CC-V1101	O	No	4-6	Butterfly	Motor	O	O	O	FAI	CSW	-	A	Yes
X-49B	II	Primary Component Cooling Water Thermal Barrier Loop A (Return)	Demineralized Water (Corrosion Inhibitor)	6	No	No	6	6"-CC-V1109	O	No	4-4	Butterfly	Motor	O	O	O	FAI	CSW	-	A	Yes
X-50	III E	Safety Injection PT-936	Demineralized Water		Yes	No	9	N/A		No											
X-51		Spare																			
X-52A	I	Air Sample Supply	Containment Atmosphere	1/2 1/2	No	No	11	1/2"-CAH-FV-6572 1/2"-CAH-FV-6573	O I	Yes Yes	1-0 1-0	Gate Gate	Solenoid Solenoid	O O	CL CL	CL CL	FC FC	T,CSW T,CSW	2 2	A B	Yes Yes
X-52B	I	Air Sample Supply	Containment Atmosphere	1/2 1/2	No	No	11	1/2"-CAH-FV-6574 1/2"-CAH-V12	O I	Yes Yes	1-0 1-0	Gate Check	Solenoid Self	O -	CL -	CL -	FC -	T,CSW -	2 -	A -	Yes No

Cnt. Penetration (8)	Appl. Gen. Design Criteria or Reg. Guide (1)	System Name	Fluid Contained	Line Size (in.)	Essential Sys.	Pot. Bypass or Through-Line Leakage	Figure 6.2-91 Sheet	Isolation Valve Number	Valve Loc Inside/ Outside (2)	Type C Tests	Length of Pipe (ft-in) (3)	Valve		Valve Position (5)				Containment Isolation Signal (6)	Valve Close Time (Sec) (7)	Power Source Bus A or B	Position Indication
												Type	Operator	Normal	Shutdown	Post Accident	Power Failure				
X-53-56		(Numbers not used)																			
X-57A		Spare																			
X-57B	III E	Safety Injection PT-937	Demineralized Water		Yes	No	9	N/A		No											
X-57C		Spare																			
X-58		Spare																			
X-59		Spare																			
X-60	E	Containment Spray	Borated Water	16	Yes	No	2	16"-CBS-V14	O	No	2-0	Encap-sulated Gate	Motor	CL	CL	O	FAI	Recirc. CSW	34(4)	B	Yes
X-61	E	Containment Spray	Borated Water	16	Yes	No	2	16"-CBS-V8	O	No	2-0	Encap-sulated Gate	Motor	CL	CL	O	FAI	Recirc., CSW	34(4)	A	Yes
X-62***																					
X-63	II	Steam Generator Blowdown	Secondary Water	3	No	No	9	3"-SB-V9	O	No	7-2	Gate	Pneumatic	O	O	CL	FC	T,CSW	10	A&B	Yes
X-64	II	Steam Generator Blowdown	Secondary Water	3	No	No	9	3"-SB-V10	O	No	10-0	Gate	Pneumatic	O	O	CL	FC	T,CSW	10	A&B	Yes

*** Penetration for fuel transfer tube, Type B test applicable.

Cnt. Penetration (8)	Appl. Gen. Design Criteria or Reg. Guide (1)	System Name	Fluid Contained	Line Size (in.)	Essential Sys.	Pot. Bypass or Through-Line Leakage	Figure 6.2-91 Sheet	Isolation Valve Number	Valve Loc Inside/ Outside (2)	Type C Tests	Length of Pipe (ft-in) (3)	Valve		Valve Position (5)				Containment Isolation Signal (6)	Valve Close Time (Sec) (7)	Power Source Bus A or B	Position Indication
												Type	Operator	Normal	Shutdown	Post Accident	Power Failure				
X-67	I	Service Air	Air	2 2	No	Yes	7	2"-SA-V229 2"-SAV-V1042	O I	Yes Yes	- 10-2	Gate Globe	Manual Manual	LC LC	LC LC	LC LC	- -	- -	- -	- -	No No
X-65	II	Steam Generator Blowdown	Secondary Water	3	No	No	9	3"-SB-V11	O	No	8-0	Gate	Pneumatic	O	O	CL	FC	T,CSW	10	A&B	Yes
X-66	II	Steam Generator Blowdown	Secondary Water	3	No	No	9	3"-SB-V12	O	No	6-4	Gate	Pneumatic	O	O	CL	FC	T,CSW	10	A&B	Yes
X-68		Instr. Air	Air	2	No	Yes	12	2"-IA-V530 2"-IA-V531	O I	Yes Yes	14-11	Globe Check	Pneumatic Self	CL CL	CL CL	CL CL	CL -	T -	10 -	A -	Yes No
X-69		Spare																			
X-70		Spare																			
X-71A/ 74A	E	Combustible Gas Train B H_2 Analyzer Inlet	Containment Atmosphere	1	No	No	8	1"-CGC-V32	O	No	10-7	Globe	Manual	LC	LC	O	-	-	-	-	No
X-71B/ 74B	I	Combustible Gas Train B H_2 Analyzer Return	Containment Atmosphere	1 1	No	No	8	1"-CGC-V24 1"-CGC-V25	O I	No No	10-7 10-2	Globe Check	Manual Self	LC -	LC -	O -	- -	- -	- -	- -	No No
X-71C/ 74C X-76/ 73	I	Combustible Gas Containment Exhaust	Containment Atmosphere	2 2	No	No	8	2"-CGC-V36 2"-CGC-V28	O I	Yes Yes	27-6 13-1	Globe Globe	Manual Motor	LC CL	LC CL	O (12) O (12)	- FAI	- T,CSW	- 12	- B	No Yes
X-71D/ 74D	I	Leak Detection	Containment Detection	1/2 1/2	No	Yes	11	1/2"-LD-V1 1/2"-LD-V2	I O	Yes Yes	2-1 1-6	Globe Globe	Manual Manual	LC LC	LC LC	LC LC	- -	- -	- -	- -	No No

Cnt. Penetration (8)	Appl. Gen. Design Criteria or Reg. Guide (1)	System Name	Fluid Contained	Line Size (in.)	Essential Sys.	Pot. Bypass or Through-Line Leakage	Figure 6.2-91 Sheet	Isolation Valve Number	Valve Loc Inside/ Outside (2)	Type C Tests	Length of Pipe (ft-in) (3)	Valve		Valve Position (5)				Containment Isolation Signal (6)	Valve Close Time (Sec) (7)	Power Source Bus A or B	Position Indication
												Type	Operator	Normal	Shutdown	Post Accident	Power Failure				
X-71E/ 74E		Spare																			
X-72A/ 75A	E	Combustible Gas Train A H_2 Analyzer Inlet	Containment Atmosphere	1	No	No	8	1"-CGC-V10	O	No	10-7	Globe	Manual	LC	LC	O	-	-	-	-	No
X-72B/ 75B	I	Combustible Gas Train A H_2 Analyzer Return	Containment Atmosphere	1 1	No	No	8	1"-CGC-V3 1"-CGC-V4	O I	No No	10-7 13-3	Globe Check	Manual Self	LC -	LC -	O -	- -	- -	- -	- -	No No
X-72C/ 75C X-76/ 73	I	Combustible Gas Containment Exhaust	Containment Atmosphere	2 2	No	No	8	2"-CGC-V15 2"-CGC-V14	O I	Yes Yes	9-0 18-2	Globe Globe	Manual Motor	LC CL	LC CL	O (12) O (12)	- FAI	- T,CSW	- 12	- A	No Yes
X-72D/ 75D		Spare																			
X-72E/ 75E		Spare																			
X-72F/ 75F		Spare																			
HVAC-1 (9)	E	Containment Air-Purge	Containment Atmosphere	36 36	No		10				0-6 0-6										
HVAC-2 (9)	E	Containment Air-Purge	Containment Atmosphere	36 36	No		10 10				0-6 0-6										

Cnt. Penetration (8)	Appl. Gen. Design Criteria or Reg. Guide (1)	System Name	Fluid Contained	Line Size (in.)	Essential Sys.	Pot. Bypass or Through-Line Leakage	Figure 6.2-91 Sheet	Isolation Valve Number	Valve Loc Inside/ Outside (2)	Type C Tests	Length of Pipe (ft-in) (3)	Valve		Valve Position (5)				Containment Isolation Signal (6)	Valve Close Time (Sec) (7)	Power Source Bus A or B	Position Indication
												Type	Operator	Normal	Shutdown	Post Accident	Power Failure				
X-77A	III E	Reactor Coolant System LT-1321 LT-1322 LIS-1321	Demineralized Water		Yes	No	9	N/A		No											
X-77B	III E	Reactor Coolant System LT-1321 LT-1322 LIS-1322 PT-403	Demineralized Water		Yes	No	9	N/A		No											
X-77C	III E	Safety Injection PT-934	Demineralized Water		Yes	No	9	N/A		No											
X-77D	III E	Safety Injection PT-2576	Demineralized Water		Yes	No	9	N/A		No											
X-78A	III E	Reactor Coolant System LT-1311 LT-1312 LIS-1311	Demineralized Water		Yes	No	9	N/A		No											
X-78B	III E	Reactor Coolant System LT-1311 LT-1312 LIS-1312 PT-405	Demineralized Water		Yes	No	9	N/A		No											
X-78C	III E	Safety Injection PT-935	Demineralized Water		Yes	No	9	N/A		No											
X-78D	III E	Safety Injection PT-2577	Demineralized Water		Yes	No	9	N/A		No											

NOTES FOR TABLE 6.2-83

1. I. - General Design Criteria 55 and 56

   II - General Design Criterion 57

   III - Sealed fluid instrument lines (Section 6.2.4.1.d.3)

   E - Exception, as discussed in Subsection 6.2.4.2.m

2. I - Location inside the containment

   O - Location outside the containment

3. Length of pipe from containment to outermost isolation valve

4. The listed valve close time is not essential for containment isolation.

   This valve does not receive a containment isolation signal.

5. O - Open FAI - Fail as is LO - Locked open

   CL - Closed FC - Fail closed LC - Locked closed

6. Containment Isolation Signals

   T - Phase A containment isolation signal

   P - Phase B containment isolation signal

   CVIS - Containment ventilation isolation signal

   Other

   MSIS - Main steam line isolation signal

   S - Safety injection signal

   RXT - Reactor trip signal coincident with a low reactor coolant Tavg signal

   SG - Steam generator hi-hi signal

   CSW - Control Switch

   CSAS - Containment Spray actuation signal

   RECIRC - Refueling water storage tank lo-lo level signal coincident with an S signal.

7. The closing times given are those that are specified as maximum

8. Alpha designations on penetration numbers are for clarification only and are not reflected in other documents

9. Testable blind flanges are installed on the outboard side of penetrations HVAC-1 and HVAC-2 during modes 1, 2, 3, and 4. These blind flanges form part of the containment boundary and are subject to Type B testing.

10. The seal injection function is non-essential, but this seal injection path does provide an alternate passive path for boration and RCS inventory control, which is credited for safe shutdown.

11. These sampling valves may be open intermittently to obtain a post accident sample (not a safety-related function).

12. These CGC valves would only be opened post accident for a containment building purge, a backup function. This would only be required if both safety-related hydrogen recombiners failed or if the post LOCA hydrogen generation rate was significantly greater than the design basis generation rate.

13. The MSIV bypass valves are normally locked closed with the breakers locked open. During startup and surveillance testing, the valves may be open (breakers closed), which allows MSIS and CSW operation.

TABLE 6.2-84 HYDROGEN GAS ANALYZER DESIGN PARAMETERS

A.	General		
	Safety Classification		1E
	Sensor Type		Thermal catalytic
	Scale, %		0 to 10
	Indication		Local (4% H_2 concentration to be clearly indicated in red)
	Accuracy, %		2½ full scale
	Controls		Off-Standby-Analyze
	Response Time, seconds		60, 90% step change
	Min. Sample Flow, scfm		0.08 @ 60 psig containment pressure
	Max. Sample Transit Time, minutes *		10.0
B.	Normal Sampling		
	Temperature, °F		50 to 120
	Pressure, psig		-3.5 to 1.5
	Gamma Radiation, Rad/hr		50
	Relative Humidity, %		5 to 95
C.	LOCA and Post-LOCA Sampling		
	Temperature, °F		380 maximum
	Pressure, psig		-5 to 60
	Gamma Radiation,	Rads – water	1.5×10^8
		Rads - air	6.3×10^7
	Water		1900 ppm boron, pH of 10.5
	Relative Humidity, %		100
D.	Normal Operating Environment		
	Temperature, °F		50 to 150
	Pressure, psig		0 to 3
	Humidity, %		10 to 95
	Radiation Dose, Rads in40 year period		5×10^6

* Time from sample entering the sample line in the containment until it reaches the hydrogen analyzer.

TABLE 6.2-85 APPLICABLE CODES, STANDARDS, AND REGULATORY GUIDES USED IN THE DESIGN OF THE ELECTRIC HYDROGEN RECOMBINER

1. NRC Regulatory Guides

   1.7 (March 10, 1971)

   1.28 (Safety Guide 28, 6/7/72)

   1.29 (Rev. 2, 2/76)

   1.38 (Rev. 1, 10/76)

2. 10 CFR 50, Appendix A, GDC 2, 41, 42, 43

3. Industry Codes

   ASME IX (Welding and Brazing Requirements)

   National Electric Code

   National Electric Manufacturing Association

   National Fire Protection Association

4. Underwriters' Laboratories, Inc.

5. Institute of Electrical and Electronics Engineers

   IEEE 308-1971

   IEEE 323-1974

   IEEE 334-1974

   IEEE 383-1974

   IEEE 344-1975

TABLE 6.2-86 ELECTRIC HYDROGEN RECOMBINER TYPICAL PARAMETERS

Power (maximum), kW *	75
Capacity (minimum), scfm	100
Heaters	
Number	4
Heater surface area/heater, ft^2	35
Maximum heat flux, Btu/hr-ft^2	2850
Maximum sheath temperature, °F	1550
Gas Temperature	
Inlet, °F	80 to 155
In heater section, °F	1150 to 1400
Materials	
Outer structure	300-Series SS
Inner structure	Incoloy-800
Heater element sheath	Incoloy-800
Dimensions, ft	
Height	8
Width	3.9
Depth	4.6
Weight, lb	4500

* Power can be controlled by SCR.

TABLE 6.2-87 CONTAINMENT BUILDING ALUMINUM INVENTORY

Item	Exposed Surface (ft^2) (Note 1 & 2)
Jib Crane	3
Nuclear Instrumentation	83
Flux Map Drive System	88
Rod Position Indicator Connectors	81
CRDM Connectors	69
Miscellaneous Valves	86
Containment Elevator Fans	127.9
Excore Detector Supports	28.6
CRD Fans, Blades, and Hubs	19.1
Polar Gantry Crane	40.8
I&C Transmitters & Misc.	34.9
Electrical Fixtures	27.6
Test Pump	3
Refueling Machine and Transfer System	26.4
Signs (HP, etc.)	8
Gaitronics System	140
Work Control Allocation (Note 2)	500
Contingency (Note 2)	433.7
Total	1800 (Note 1 & 2)

Note 1: The 1800 ft^2 total value is the design basis value for hydrogen generation. Allocation among the specified categories may vary due to design changes in progress. Refer to Calculation 4.3.16.13F for actual allocation.

Note 2: The aluminum contingency values in Table 6.2-87 are not the most restrictive values following OR12. Calculation C-S-1-83814, Seabrook Post Accident Chemical Product Formation, has more limiting values. Calculation C-S-1-83814 removed the Work Control Contingency. The limiting values are based on the effect of aluminum corrosion product on the containment sump strainers. Allocation of the design contingency may vary due to design changes in progress.

TABLE 6.2-88 CONTAINMENT BUILDING ZINC INVENTORY

Item	Exposed Surface (ft^2)
Ductwork, Angles and Supports	48,357
Decking	7,850
Grating	24,395
Cable Trays	19,295
Tray Supports	86,190
Conduit	23,387
Conduit Supports	98,256
Instrument Tube Trays and Supports	21,040
Electrical Box Supports	8,416
Wire Mesh Doors	1,182
Scaffolding Components	3,400
Wire Mesh Tool Crib	648
Misc. Sheet Metal and Structural Members	700
Refueling Machine and Fuel Transfer System	52
Debris Interceptor Hardware	25
Work Control Allocation	6,000
Contingency	5,598
Total	355,000

TABLE 6.2-89 PARAMETERS USED TO EVALUATE CGCS PERFORMANCE

Reactor Power Level, MW_t	3650.6
Initial Volume of Containment Atmosphere, scf	2.55×10^6
Mass of Zircaloy Cladding, lb	43,336
Hydrogen in Primary Coolant, scf	1127
Hydrogen Production Rates (scfh) from Corrosion:	
Per the methodology of Reference 27, Attachment II.	

TABLE 6.2-90 SYSTEMS OPEN TO CONTAINMENT ATMOSPHERE AND/OR VENTED PRIOR TO AND DURING TYPE "A" TESTING

1. Reactor Coolant
2. Containment Online Purge
3. Equipment Vent - Hydrogenated
4. Equipment and Floor Drainage
5. Combustible Gas Control (including H_2 Analyzers)
6. Fire Protection
7. Containment Air Purge
8. Sample (Including Post-Accident)
9. SI Accumulators (Including Test/Fill Line)
10. Demineralized Water
11. Nitrogen Gas
12. Reactor Makeup Water
13. CS Purification/Letdown
14. Letdown Return
15. Reactor Cavity Cleanup
16. Containment Air Handling
17. Service Air
18. Instrument Air

TABLE 6.2-91 SYSTEMS NOT VENTED DURING TYPE "A" TESTING

System	Justification
High Pressure Safety Injection	System is normally filled with water and operating under post-accident conditions
Low Pressure Safety Injection	System is normally filled with water and operating under post-accident conditions
Containment Spray	System is normally filled with water and operating under post-accident conditions. Portion of the system inboard of the isolation valves is automatically vented inside containment through the spray nozzles.
Chemical and Volume	System maintains plant in safe Control (including RCP Seal Water) condition during the test - normally filled with water
Residual Heat Removal	System maintains plant in safe condition during the test - normally filled with water
Cooling Water to Containment Fan Coolers	System is normally filled with water under post-accident conditions. Fan coolers are used to maintain temperature during the test.
Steam Generator Blowdown	Closed system inside containment
Main Steam	Closed system inside containment
Feedwater	Closed system inside containment
PCCW to Thermal Barrier Cooling	Closed system inside containment

TABLE 6.2-92 CONTAINMENT LINER PENETRATIONS*

Piping Penetration No.	Essential (E) or Nonessential (NE)	System	Selection Basis
X-1	E	Main Steam from SG E 11A	Decay Heat Removal
X-2	E	Main Steam from SG E 11B	Decay Heat Removal
X-3	E	Main Steam from SG E 11C	Decay Heat Removal
X-4	E	Main Steam from SG E 11D	Decay Heat Removal
X-5	E	Feedwater to SG E 11A	Decay Heat Removal
X-6	E	Feedwater to SG E 11B	Decay Heat Removal
X-7	E	Feedwater to SG E 11C	Decay Heat Removal
X-8	E	Feedwater to SG E 11D	Decay Heat Removal
X-9	NE	RHR Pump Suction from HL #1	
X-10	NE	RHR Pump Suction from HL #4	
X-11	E	RHR to Safety Injection	Low Pressure Injection
X-12	E	RHR to Safety Injection	Low Pressure Injection
X-13	E	RHR to Safety Injection	Hot Leg Injection
X-14	E	Containment Bldg. Spray	Containment Spray
X-15	E	Containment Bldg. Spray	Containment Spray
X-16	NE	Containment Online Purge	
X-17	NE	Hydrogenated Vent Hdr.	
X-18	NE	Containment Online Purge	
X-19	NE	Post-Accident Sample	Req'd for Post-Accident Sampling
X-20	NE*	Primary Component Cooling Water, Loop A	Desirable for Some Accidents; Isolate on Hi-2 Containment Pressure
X-21	NE*	Primary Component Cooling Water, Loop A	Desirable for Some Accidents; Isolate on Hi-2 Containment Pressure
X-22	NE*	Primary Component Cooling Water, Loop B	Desirable for Some Accidents; Isolate on Hi-2 Containment Pressure
X-23	NE*	Primary Component Cooling Water, Loop B	Desirable for Some Accidents; Isolate on Hi-2 Containment Pressure

* Although these systems are nonessential, they are valuable in accident monitoring and control.

Piping Penetration No.	Essential (E) or Nonessential (NE)	System	Selection Basis
X-24	E	SI from Charging Pumps	High Pressure SI
X-25	E	SI, High Head	Medium Pressure SI
X-26	E	SI, High Head	Medium Pressure SI
X-27	E	SI, High Head	Medium Pressure SI
X-28	NE	Seal Water to RC Pump 1A	
X-29	NE	Seal Water to RC Pump 1B	
X-30	NE	Seal Water to RC Pump 1C	
X-31	NE	Seal Water to RC Pump 1D	
X-32	NE	RC DRN TK to Primary DRN TK	
X-33	NE	Chemical and Volume Control	
X-34	NE	Floor Equipment Drain	
X-35	NE*	RCS Sampling	Required for Post-Accident Sampling Manual Bypass Operation
X-35	NE	SI Test	
X-36	NE	Demineralized Water	
X-36	NE	Nitrogen Gas	
X-36	NE	Reactor Makeup Water	
X-37	NE	Letdown HX	
X-37	NE	RCP Seal Water Return	
X-38	NE*	Combustion Gas Control	May be Required for Purging Following Some Accident-Manual Operation
X-38	NE	Fire Protection	
X-39	NE	Refueling Cavity Purification	
X-40	NE	Nitrogen to PRT	
X-40	NE	PRT Gas Sample	
X-41	NE	Spare	
X-42	NE	Spare	
X-43	E	Press. Protection Containment	Containment Monitoring
X-44	NE	Spare	
X-45	NE	Spare	

Piping Penetration No.	Essential (E) or Nonessential (NE)	System	Selection Basis
X-46	NE	Spare	
X-47	E	Press. Protection Monitoring	Containment
X-48	NE	PCCW-Thermal Barrier Cooling	
X-49	NE	PCCW-Thermal Barrier Cooling	
X-50	E	Press. Protection	Containment Monitoring
X-51	NE	Spare	
X-52	E	Containment Air Sample	Containment Monitoring
X-53-56		(Numbers Not Used)	
X-57	E	Press. Protection	Containment Monitoring
X-58	NE	Spare	
X-59	NE	Spare	
X-60	E	Containment Recirc. Sump CBSTK-10B	Containment Spray and SI Recirculation
X-61	E	Containment Recirc. Sump CBSTK-10A	Containment Spray and SI Recirculation
X-62	NE	Fuel Transfer Tube	
X-63	NE	Steam Generator Blowdown E11A	
X-64	NE	Steam Generator Blowdown E11B	
X-65	NE	Steam Generator Blowdown E11C	
X-66	NE	Steam Generator Blowdown E11D	
X-67	NE	Service Air	
X-68	NE	Instrument Air	
X-69	NE	Spare	
X-70	NE	Spare	
X-71	NE*	Combustible Gas Control	Required for H_2 Post-Accident Sampling
X-71	NE	Spare	
X-72	NE*	Combustible Gas Control	Required for H_2 Post-Accident Sampling
X-72	NE	Spare	
X-77	E	Reactor Vessel Level Indication System	Required for Post-Accident Monitoring
X-78	E	Reactor Vessel Level Indication System	Required for Post-Accident

Piping Penetration No.	Essential (E) or Nonessential (NE)	System	Selection Basis
			Monitoring
HVAC-1	NE	Containment Air Purge Supply	
HVAC-2	NE	Containment Air Purge	
E-1	NA	Electrical	NA
E-2	NA	Electrical	NA
E-3	NA	Electrical	NA
E-4	NA	Electrical	NA
E-5	NA	Electrical	NA
E-6	NA	Electrical	NA
E-7	NA	Electrical	NA
E-8	NA	Electrical	NA
E-9	NA	Spare Header	NA
E-10	NA	Spare Header	NA
E-11	NA	Electrical	NA
E-12	NA	Spare Header	NA
E-13	NA	Spare Header	NA
E-14	NA	Electrical	NA
E-15	NA	Spare Header	NA
E-16	NA	Electrical	NA
E-17	NA	Electrical (Conax)	NA
E-18	NA	Electrical	NA
E-19	NA	Electrical	NA
E-20	NA	Electrical	NA
E-21	NA	Electrical	NA
E-22	NA	Electrical	NA
E-23	NA	Electrical	NA
E-24	NA	Electrical	NA
E-25	NA	Electrical	NA
E-26	NA	Electrical	NA
E-27	NA	Electrical	NA
E-28	NA	Electrical	NA

Piping Penetration No.	Essential (E) or Nonessential (NE)	System	Selection Basis
E-29	NA	Electrical	NA
E-30	NA	Electrical	NA
E-31	NA	Electrical	NA
E-32	NA	Electrical	NA
E-33	NA	Spare Header	NA
E-34	NA	Electrical	NA
E-35	NA	Electrical	NA
E-36	NA	Spare Header	NA
E-37	NA	Spare Header	NA
E-38	NA	Electrical	NA
E-39	NA	Electrical	NA
E-40	NA	Electrical	NA
E-41	NA	Electrical	NA
E-42	NA	Electrical	NA
E-43	NA	Electrical	NA
E-44	NA	Spare Header	NA
E-45	NA	Electrical	NA
E-46	NA	Spare Header	NA
E-47	NA	Electrical	NA
E-48	NA	Electrical	NA
E-49	NA	Electrical	NA
E-50	NA	Electrical	NA
E-51	NA	Electrical (Conax)	NA
E-52	NA	Electrical	NA
E-53	NA	Electrical	NA
E-54	NA	Electrical	NA
E-55	NA	Electrical	NA
E-56	NA	Electrical	NA
E-57	NA	Instrument X-77	NA
E-58	NA	Mechanical Spare ***	NA

*** Flange welded to nozzle inside and outside containment. Blank test flange bolted to flange inside containment.

Piping Penetration No.	Essential (E) or Nonessential (NE)	System	Selection Basis
E-59	NA	Mechanical Spare ***	NA
E-60	NA	Unused **	NA
E-61	NA	Unused **	NA
E-62	NA	Unused **	NA
E-63	NA	Unused **	NA
E-64	NA	Instrument X-78	NA

** Plate welded to nozzle inside containment.

NOTE 1 Viewed from outside containment looking south.

NOTE 2 Electrical penetrations are Westinghouse except for E-17 and E-51 which are Conax.

TABLE 6.3-1 EMERGENCY CORE COOLING SYSTEM COMPONENT DESIGN PARAMETERS

Accumulators	
Number	4
Design pressure (psig)	700
Design temperature (°F)	300
Operating temperature (°F)	100 to 150
Normal operating pressure (psig)	650
Minimum operating pressure (psig)	585
Total volume (ft^3)	1350 each
Nominal operating water volume (ft^3)	850 each
Volume N_2 gas (ft^3)	500
Boric acid concentration (ppm)	2600-2900
Relief valve setpoint (psig)	700
Centrifugal Charging Pumps	
Number	2
Design pressure (psig)	2800
Design temperature (°F)	300
Design flow [(a)] (gpm)	150
Design head (ft)	5800
Maximum flow (gpm)	550
Head at maximum flow (ft)	1400
Discharge head at shutoff (ft)	6200
Motor rating (hp)	600
Required NPSH at maximum flow (ft)	28
Available NPSH (ft)	40
Safety Injection Pumps	
Number	2
Design pressure (psig)	1750
Design temperature (°F)	300
Design flow (gpm)	425

[(a)] Includes miniflow

Safety Injection Pumps	
Design head (ft)	2700
Maximum flow (gpm)	669
Minimum head at maximum flow (ft)	1700
Minimum head at shutoff (ft)	3545
Motor rating [b] (hp)	450
Required NPSH at maximum flow (ft)	18
Available NPSH (ft)	43.4
Residual Heat Removal Pumps	
Number	2
Design pressure (psig)	600
Design temperature (°F)	400
Design flow (gpm)	3000
Design head (ft)	375
Maximum flow (gpm)	5150 [c]
Minimum head at maximum flow (ft)	275
Minimum head at shutoff (ft)	460
NPSH required at 4388 gpm (ft) [d]	18
NPSH available at 4388 gpm (ft) [d]	25.61
Power (hp)	400
Residual Heat Exchangers	
(See Subsection 5.4.7 for design parameters)	
Motor-Operated Valves	Maximum Opening or Closing Time
Up to and including 8 inches, time (sec) Over 8 inches [e]	15 [f][g]

[b] 1.15 service factor not included.
[c] 5150 GPM corresponds to maximum pump flow on manufacturer's certified pump curve. Calculated maximum system flow is 4500 GPM during injection mode and 4388 GPM during recirculation.
[d] These conditions reflect the most limiting suction conditions for the residual heat removal pumps during post-LOCA recirculation from the containment sump.
[e] Closing time varies dependent upon size, type valve and type of actuator.
[f] Does not include valves RH-V32 and RH-V70.
[g] Active valves that do not receive an automatic signal for operation and that do not have a required stroke time in any analysis may have a longer maximum opening or closing time.

TABLE 6.3-2 EMERGENCY CORE COOLING SYSTEM RELIEF VALVE DATA

Description	Fluid Discharge	Fluid Inlet Temperature Normal (°F)	Set Pressure (psig)	Backpressure Constant (psig)	Maximum Total Backpressure (psig)	Capacity
Outside Containment N_2 supply to accumulators	N_2 gas	120	700	0	0	1500 scfm
Safety injection pump discharge	Water	120	1750	0 to 15	50	20 gpm
Residual heat removal pump safety injection line	Water	120	600	0 to 15	50	20 gpm
Safety injection pumps suction header	Water	100	220	0 to 15	50	25 gpm
Accumulator to containment	N_2 gas	120	700	0	0	1500 scfm
Inside Containment N_2 supply to accumulators (NNS-B31.1 Portion)	N_2 gas	120	800	0	50	1184 scfm

TABLE 6.3-3 MOTOR-OPERATED ISOLATION VALVES IN THE EMERGENCY CORE COOLING SYSTEM

Location	Valve Identification	Interlocks	Automatic Features	Position Indication	Alarms
Accumulator isolation valves (See Dwg. NHY-503907)	SI-V3, -V17, -V32, -V47	"S" signal, RCS pressure > SI unblock pressure	Opens on "S" signal closed, MCC power available, and RCS	MCB	Yes-out of position
Safety injection pump suction from RWST	CBS-V47, -V51 CBS-V49, -V53	None	None	MCB	Yes-out of position
RHR suction from RWST (See Dwg. NHY-503255)	CBS-V2, -V5	Cannot be opened manually by control switch unless sump valve closed and RHR recir. valve closed	Opens on "S" signal	MCB	Yes-out of position
RHR discharge to safety injection/charging	RH-V35, -V36	Cannot be opened unless None safety injection pump miniflow isolated and RHR suction valve from RCS closed	None	MCB	Yes-out of position*
Safety injection hot leg injection (See Dwg. NHY-503909)	SI-V77, -V102	None	None	MCB	Yes-out of position*
RHR hot leg injection (See Dwg. NHY-503769)	RH-V32, -V70	None	None	MCB	Yes-out of position*
Containment sump isolation valve (See Dwg. NHY-503252)	CBS-V8, -V14	Cannot be opened in normal operation unless RHR suction valves from RCS closed	Opens on RWST low-low-1 with "S" signal	MCB	Yes-out of position*

* Out-of-position alarm is provided as part of the Bypass and Inoperable Status Alarm System MCB – Main Control Board

Location	Valve Identification	Interlocks	Automatic Features	Position Indication	Alarms
CVCS (See Dwg. NHY-503335) suction from RWST	LCV-112 D&E	"S" signal and CVC tank low level Opposite Train VCT Isolation Valve not full open.	Opens on "S" signal and CVS tank low level Opens on opposite train VCT valve not full open (not credited for the ECCS function).	MCB	Yes-out of position
Safety injection pump to cold leg (See Dwg. NHY-503909)	SI-V114	None	None	MCB	Yes-out of position
CVCS normal discharge (See Dwg. NHY-50337)	CS-V142, -V143	"S" signal	Closes on "S" signal	MCB	Yes-out of position
Cold leg isolation	SI-V138, -V139	"S" signal	Opens on "S" signal	MCB	Yes-out of position
Charging pump/safety injection pump crossover (See Dwg. NHY-503338)	CS-V460, -V461 CS-V475	None	None	MCB	Yes-out of position
RHR to RCS cold legs (See Dwg. NHY-503769)	RH-V14, -V26	None	None	MCB	Yes-out of position*
Safety injection pump miniflow (See Dwg. NHY-503911 and NHY-503901)	SI-V89, -V90, -V93	Cannot be opened unless None RHR discharge to safety injection and to charging pumps closed		MCB	Yes-out of position*
RHR cross connect (See Dwg. NHY-503765)	RH-V21, -V22	None	None	MCB	Yes-out of position*

* Out-of-position alarm is provided as part of the Bypass and Inoperable Status Alarm System MCB - Main Control Board

Location	Valve Identification	Interlocks	Automatic Features	Position Indication	Alarms
Safety injection pump cross connect (See Dwg. NHY-503912)	SI-V111, -V112	None	None	MCB	Yes-out of position*
Charging pump miniflow (See Dwg. NHY-503398 & 503380)	CS-V196, -V197	"S" signal in conjunction with charging pump Hi flow	Closes on "S" signal in conjunction with charging pump Hi flow	MCB	Yes-out of position

TABLE 6.3-4 MATERIALS EMPLOYED FOR EMERGENCY CORE COOLING SYSTEM COMPONENTS

Component	Material
Accumulators	Carbon steel clad with austenitic stainless steel
Pumps	
Centrifugal charging	Austenitic stainless steel
Safety injection	Austenitic stainless steel
Residual heat removal	Austenitic stainless steel
Residual heat exchangers	
Shell	Carbon steel
Shell end cap	Carbon steel
Tubes	Austenitic stainless steel
Channel	Austenitic stainless steel
Channel cover	Austenitic stainless steel
Tube sheet	Austenitic stainless steel
Valves	
Motor-operated valves containing radioactive fluids	
Pressure containing parts	Austenitic stainless steel or equivalent
Body-to-bonnet bolting and nuts	Low alloy steel
Seating surfaces	
Stems	Stellite No. 6 or equivalent Austenitic stainless steel or 17-4 pH stainless
Motor-operated valves containing nonradioactive, boron-free fluids	
Body, bonnet and flange	Carbon steel
Stems	Corrosion resistant steel
Diaphragm valves	Austenitic stainless steel
Accumulator check valves	
Parts contacting borated water	Austenitic stainless steel
Clapper arm shaft	17-4 pH stainless

<u>Relief valves</u>	
Stainless steel bodies	Austenitic stainless steel
Carbon steel bodies	Carbon steel
All nozzles, discs, spindles and guides	Austenitic stainless steel
Bonnets for stainless steel valves without balancing bellows	Stainless steel or plated carbon steel
All other bonnets	Carbon steel
Piping	
All piping in contact with borated water	Austenitic stainless steel

TABLE 6.3-5 FAILURE MODE AND EFFECTS ANALYSIS – EMERGENCY CORE COOLING SYSTEM – ACTIVE COMPONENTS

Component	Failure Mode	ECCS Operation Phase	*Effect on System Operation	**Failure Detection Method	Remarks
1. Motor-operated gate valve LCV-112 B (LCV-112C analogous)	Fails to close on demand.	Injection - cold legs of RC loops.	Failure reduces redundancy of providing VCT discharge isolation. No effect on safety for system operation; isolation valves LCV-112C and CS-V192 provide backup tank discharge isolation.	Valve position indication (open to closed position change) at MCB. Valve closed position monitor light for group monitoring of components at MCB.	Valve is electrically interlocked with isolation valve LCV-112D. Valve closes on actuation by a SI "S" signal provided isolation valve LCV-112D is at a full open position.
2. Motor-operated gate valve LCV-112 D (LCV-112E analogous)	Fails to open on demand.	Injection - cold legs of RC loops.	Failure reduces redundancy of providing fluid flow from RWST to suction of HHSI/CH pumps. No safety effect on system operation. Alternate isolation valve (LCV-112E) opens to provide backup flow path to suction of HHSI/CH pumps.	Same methods of detection as that stated for item #1 except open position monitor light for group monitoring of components at MCB and closed to open position change indication at MCB.	Valve is electrically interlocked with the instrumentation that monitors fluid level of the VCT. Valve opens upon actuation by a SI "S" signal or upon actuation by a low-low-level VCT signal. Valve is electrically interlocked with isolation valve LCV-112C. Valve opens when LCV-112C (LCV-112B analogous) leaves the full open position (not credited for the ECCS function).
3. Centrifugal charging pump CS-P-2A (CS-P-2B analogous)	Fails to deliver working fluid.	Injection and recirculation cold legs of RC loops.	Failure reduces redundancy of providing emergency coolant to the RCS at prevailing incident RCS pressure. Fluid flow from HHSI/CH pump CS-P-2A will be lost. Minimum flow requirements at prevailing high RCS pressures will be met by HHSI/CH pump CS-P-2B delivery.	HHSI/CH pump discharge header flow (FI-917) at MCB. Trip/closed pump switchgear circuit breaker indication on MCB. Circuit breaker close position monitor light for group monitoring of components at MCB. Breaker trip alarm at MCB.	One HHSI/CH pump is used for normal charging of RCS during plant operation. Circuit breaker aligned to close on actuation by a SI "S" signal.
4. Motor-operated globe valve CS-V196 (CS-V197 analogous)	Fails to close on demand.	Injection-cold legs of RC loops.	Failure reduces redundancy of providing isolation of HHSI/CH pump miniflow line. No effect on safety for system operation.	Valve position indication (open to closed position change) at MCB. Valve closed position monitor light and alarm for group monitoring of components at MCB.	Valve aligned close upon actuation to by a SI "S" signal.

* See list at end of table for definition of acronyms and abbreviations used.

** As part of plant operation, periodic tests, surveillance inspections and instrument calibrations are made to monitor equipment and performance. Failures may be detected during such monitoring of equipment in addition to detection.

Component	Failure Mode	ECCS Operation Phase	*Effect on System Operation	**Failure Detection Method	Remarks
5. Motor-operated gate valve CS-V143 (CS-V142 analogous)	Fails to close on demand.	Injection-cold legs of RC loops.	Failure reduces redundancy of providing isolation of HHSI/CH pump discharge to normal charging line of CVCS. No effect on safety for system operation. Alternate isolation valve (CS-V142) provides backup normal CVCS charging line isolation.	Same method of detection as that stated for item #1.	Valve aligned to close upon actuation by a SI "S" signal.
6. Motor-operated gate valve SI-V138 (SI-V139 analogous)	Fails to open on demand.	Injection-cold legs of RC loops.	Failure reduces redundancy of fluid flow paths from HHSI/CH pumps to the RCS. No effect on safety for system operation. Alternate (SI-V139) open to provide backup flow path from HHSI/CH pumps to RCS.	Same method of detection as that stated for item #4.	Valve aligned to open upon actuation by a SI "S" signal.
7. Motor-operated globe valve RH-FCV-610 (RH-FCV-611 analogous)	a. Fails to close on demand.	Injection-cold legs of RC loops.	a. Failure reduces working fluid delivered to RCS from RHR pump RH-P-8A. Minimum flow requirements for LHSI will be met by LHSI/RHR pump RH-P-8B delivering working fluid to RCS.	a. Valve position indication (open to closed position change) at MCB. RHR pump return line to cold legs flow indication (FI-618) at MCB.	Valve is regulated by signal from flow transmitter located in pump discharge header. The control valve opens when the RHR pump discharge flow is less than ~700 gpm and closes when the flow exceeds ~1400 gpm.
	b. Fails closed.	Injection-cold legs of RC loops.	b. Failure results in an insufficient fluid flow through LHSI/RHR pump RH-P-8A for a small LOCA or steam line break resulting in possible pump damage. If pump becomes inoperative minimum flow requirements for LHSI will be met by LHSI/RHR pump HR-P-8B delivering working fluid to RCS.	b. Same as that stated above for failure mode "Fails to close on demand" except closed to open position change at MCB.	
8. Residual heat removal pump RH-P-8A(Pump RH-P-8A) analogous)	Fails to deliver working fluid.	Injection-cold legs of RC loops.	Failure reduces redundancy of providing emergency coolant to the RCS from the RWST at low RCS pressure (195 psig). Fluid flow from LHSI/RHR pump RH-P-8A will be lost. Minimum flow requirements for LHSI will be met by LHSI/RHR pump RH-P-8B delivering working fluid.	RHR pump return line to cold legs flow indication (FI-618) at MCB. RHR pump discharge pressure (PI-614) at MCB. Open pump switchgear circuit breaker indication at MCB. Circuit breaker close position monitoring light and alarm for group monitoring of components at MCB. Breaker trip alarm at MCB.	The RHR pump is sized to deliver reactor coolant through the RHR heat exchanger to meet plant cooldown requirements and is used during plant cooldown and startup operations. The pump circuit breaker is aligned to close on actuation by a SI "S" signal.
9. Safety injection pump SI-P-6A(Pump SI-P-6B analogous)	Fails to deliver working fluid.	Injection-cold legs of RC loops.	Failure reduces redundancy of providing emergency coolant to the RCS from the RWST at high RCS pressure (1520 psi). Fluid flow from HHSI/SI pump SI-P-6A will be lost. Minimum flow requirements for HHSI will be met by HHSI/SI pump SI-P-6B delivering working fluid.	SI pumps discharge pressure (PI-919) at MCB. SI pump discharge flow (FI-918) at MCB. Open pump switchgear circuit breaker indication at MCB. Circuit breaker close position monitor light and alarm for group monitoring of components at MCB. Breaker trip alarm at MCB.	Pump aligned too close on circuit breaker actuation by a SI "S" signal.

Component	Failure Mode	ECCS Operation Phase	*Effect on System Operation	**Failure Detection Method	Remarks
10. Motor-operated globe valve CBS-V8 (CBS-V14 analogous)	Fails to open on demand.	Recirculation-cold legs of RC loops.	Failure reduces redundancy of providing fluid from the Containment Sump to the RCS during recirculation. LHSI/ RHR pump RH-P-8A will not provide recirculation flow. Minimum LHSI flow requirements will be met through opening of isolation valve CBS-V14 and recirculation of fluid by LHSI/RHR pump RH-P-8B.	Same method of detection as that stated for item #6. In addition failure may be detected through monitoring of RHR pump return line to cold legs flow indication (FI-618) and RHR pump discharge pressure (PI-614) at MCB.	Valve is actuated to open by SI "S" SIGNAL in coincidence with two-out-of-four "Low low Level" RWST signals. Valve is electrically interlocked from remotely being opened from MCB by isolation valves CBS-V2, RC-V23 and RC-V22.
11. Motor- operated gate valve CBS-V2 (CBS-V5 analogous)	Fails to close on demand.	Recirculation-cold legs of RC loops.	Failure reduces redundancy of providing flow isolation of Containment Sump from RWST. No effect on safety for system operation. Alternate check isolation valve CBS-V55 provides backup isolation.	Same method of detection as that stated for item #4.	Valve is electrically interlocked with isolation valve CBS-V8 and RH-V35 and may not be opened unless these valves are closed, for manual operation from main control board. Valve opens automatically on "S" signal.
12. Motor- operated gate valve RH-V14.	Fails to close on demand.	Recirculation-cold legs of RC loops.	Failure reduces redundancy of providing LHSI/RHR pump discharge flow path isolation of RCS. No effect on safety for system operation. Alternate isolation valve RH-V26 will be closed to isolate alternate flow path to cold legs.	Same method of detection as that stated for item #4.	
13. Motor-operated globe valve SI-V93	Fails to close on demand.	Recirculation-cold legs of RC loops.	Failure reduces redundancy of providing isolation of HHSI/SI pump's miniflow line isolation from RWST. No effect on safety for system operation. Alternate isolation valves SI-V89 and SI-V90 in each pumps' miniflow line provide backup isolation.	Same method of detection as that stated for item #4.	Valve is electrically interlocked with isolation valves RH-V35 and RH-V36 and may not be opened unless these valves are closed.
14. Motor-operated globe valve SI-V90 (SI-V89 analogous)	Fails to close on demand.	Recirculation-cold legs of RC loops.	Failure reduces redundancy of providing isolation of HHSI/SI pump SI-P-6A mini- flow isolation from RWST. No effect on safety for system operation. Alternate isolation valve SI-V93 in main miniflow line provides backup isolation.	Same method of detection as that stated for item #4.	Same remark as stated for item #16.
15. Motor-operated gate valve RH-V35	Fails to open on demand.	Recirculation-cold legs of RC loops.	Failure reduces redundancy of providing NPSH to suction of HHSI/CH pumps from LHSI/RHR pumps. No safety effect on system operation. Minimum NPSH to HHSI/CH pump suction will be met by flow from LHSI/RHR pump RH-P-8B via cross-tie line and opening of isolation valve CS-V460 or CS-V461 and isolation valve RH-V36.	Same method of detection as that stated for item #4.	Valve is electrically interlocked with isolation valves SI-V90, SI-V89, SI-V93, RC-V23, RC-V22 and CBS-V8. Valve cannot be opened unless valve SI-V93 or SI-V90 and SI-V89 valves are closed; valve RCS-V23 or RCS-V22 is closed, and CBS-V8 is open.

Component	Failure Mode	ECCS Operation Phase	*Effect on System Operation	**Failure Detection Method	Remarks
16. Motor-operated gate valve RH-V36.	Fails to open on demand.	Recirculation-cold legs of RC loops.	Failure reduces redundancy of providing NPSH to suction of HHSI/SI pumps from LHSI/RHR pumps. No effect safety for system operation. Minimum NPSH to HHSI/SI pump suction will be met by flow from LHSI/RHR pump RH-P-8A via cross-tie line and opening of isolation valve CS-V460 or CS-V461 and isolation valve RH-V35.	Same method of detection as that stated for item #4.	Valve is electrically interlocked with isolation valves, SI-V90, SI-V89 SI-V93, and CBS-V14, RC-V88 and RC-V87. Valve cannot be opened unless valve SI-V93 or SI-V90 and SI-V89 valves are closed; valve RC-V88 or RC-V87 is closed and valve CBS-V14 is open.
17. Motor-operated gate valve CS-V460 (CS-V461 analogous)	Fails to open on demand.	Recirculation-cold legs of RC loops.	Failure reduces redundancy of providing fluid flow through cross-tie between suction of HHSI/CH pumps and HHSI/SI pumps. No effect on safety of system operation. Alternate isolation valve (CS-V461 opens to provide backup flow path through cross- tie line.	Same method of detection as that stated for item #4.	
18. Motor-operated gate valve CBS-V47 (CBS-V51 analogous)	Fails to close on demand.	Recirculation-cold legs of RC loops.	Failure reduces redundancy of providing flow isolation of HHSI/SI pump suction from RWST. No effect on safety for system operation. Alternate check isolation valve (CBS-V48) provides backup isolation.	Same method of detection as that stated for item #4.	
19. Motor-operated gate valve LCV-112D (LCV-112E analogous)	Fails to close on demand.	Recirculation-cold legs of RC loops.	Failure reduces redundancy of providing flow isolation of suction of HHSI/CH pumps from RWST. No effect on safety for system operation. Alternate check isolation valve (CBS-V58) provides backup isolation.	Same method of detection as that stated previously for failure of item during injection phase of ECCS operation.	The MCB RWST-VCT Suction Interlock NORMAL/BLOCK Selector Switch must be operated to BLOCK before the RWST valves can be closed.
20. Residual heat pump RH-P-8A (pump RH-P-8B analogous)	Fails to deliver working fluid.	Recirculation-cold legs of RC loops.	Failure reduces redundancy of providing recirculation of coolant to the RCS from the Containment Sump. Fluid flow from LHSI/RHR pump RH-P-8A will be lost. Minimum recirculation flow requirements for LHSI flow will be met by LHSI/RHR pump RH-P-8B delivering fluid.	Same method of detection as that stated previously for failure of item during injection phase of ECCS operation.	
21. Safety injection pump SI-P-6A (pump SI-P-6B analogous)	Fails to deliver working fluid.	Recirculation-cold or hot legs of RC loops.	Failure reduces redundancy of providing recirculation of coolant to the RCS from the Containment Sump to cold legs of RC loops via RHR and SI pumps. Fluid flow from HHSI/SI pump SI-P-6A will be lost. Minimum recirculation flow requirements for HHSI flow will be met by HHSI/SI pump SI-P-6B delivering working fluid.	Same method of detection as that stated previously for failure of item during injection phase to ECCS operation.	

Component	Failure Mode	ECCS Operation Phase	*Effect on System Operation	**Failure Detection Method	Remarks
22. Motor-operated gate valve RH-V14	Fails to close on demand.	Recirculation-hot legs of RC loops.	Failure reduces redundancy of providing recirculation of coolant to the RCS from the Containment Sump to hot legs of RC loops. Fluid flow from LHSI/RHR pump RH-P-8A will continue to flow to cold legs for RC loops. Closure of backup isolation valve RH-V22 permits minimum recirculation flow requirement to hot legs of RC loops to be met by LHSI/RHR pump RH-P-8B recirculating fluid to RC hot legs directly and via HHSI/SI pumps.	Same method of detection as that stated for item #4.	
23. Motor-operated gate valve RH-V32 (RH-V70 analogous)	Fails to open on demand.	Recirculation-hot legs of RC loops.	Failure reduces redundancy of providing recirculation of coolant to the RCS from the containment sump to the hot legs of RC loops. No effect on safety for system operation. Alternate isolation valve (RH-V70) opens to provide flow path to RCS hot legs via LHSI/RHR pumps.	Same method of detection as that stated for item #4.	
24. Motor-operated gate valve RH-V26	Fails to close on demand.	Recirculation-hot legs of RC loops.	Failure reduces redundancy of providing recirculation of coolant to the RCS from the Containment Sump to hot legs of RC loops. Fluid flow from LHSI/RHR pump RH-P-8B will continue to flow to cold legs of RC loops. Closure of backup isolation valve RH-V21 permits minimum recirculation flow requirements to hot legs of RC loops to be met by LHSI/RHR pump RH-P-8A recirculating fluid to RC hot legs directly and via HHSI/SI pumps.	Same method of detection as that stated for item #4.	
25. Motor-operated gate valve SI-V112 (SI-V111 analogous)	Fails to close on demand.	Recirculation-hot legs of RC loops.	Failure reduces redundancy of providing flow isolation of HHSI/SI pump flow to cold legs of RC loops. No effect on safety for system operation valve SI-V114 provides backup isolation against flow to cold legs of RC loops.	Same method of detection as that stated for item #4.	
26. Motor-operated gate valve SI-V102 (SI-V77 analogous)	Fails to open on demand.	Recirculation-hot legs of RC loops.	Failure reduces redundancy of providing recirculation of coolant to the hot legs of RCS from the Containment Sump via HHSI/SI pumps. Minimum recirculation flow requirements to hot legs of RC loops will be met by LHSI/RHR pump RH-P-8A and RH-P-8B recirculating fluid from Containment Sump to hot legs of RC loops and HHSI/SI pump SI-P-6B recirculating fluid to hot legs 2 and 3 of RC loops through the opening of isolation valve SI-V77.	Same method of detection as that stated for item #6. In addition, SI pump discharge pressure (PI-919) and flow (FI-918) at MCB.	

Component	Failure Mode	ECCS Operation Phase	*Effect on System Operation	**Failure Detection Method	Remarks
27. Motor-operated gate valve SI-V114	Fails to close on demand.	Recirculation-hot legs of RC loops.	Failure reduces redundancy of providing flow isolation of HHSI/SI pump flow to cold legs of RC loops. No effect on safety for system operation. Alternate isolation valves SI-V112 and SI-V111 in cross-tie line between HHSI/SI pumps provides backup isolation against flow to cold legs of RC loops.	Same method of detection as that stated for item #4.	
28. Residual heat removal pump RH-P-8A (Pump RH-P-8B analogous)	Fails to deliver working fluid.	Recirculation-hot legs of RC loops.	Failure reduces redundancy of providing recirculation of coolant to the RCS from the Containment sump to the hot legs of RC loops. Fluid flow from LHSI/RHR pump RH-P-8A will be lost. Minimum flow requirements to hot legs directly and via HHSI/SI pumps.	Same method of detection as that stated previously for failure of item during injection phase of ECCS operation except flow indication is not available.	

List of abbreviations and acronyms

CBS	Containment Spray
CH, CS	Charging
HHSI	High Head Safety Injection
LHSI	Low Head Safety Injection
LOCA	Loss of Coolant Accident
MCB	Main Control Board
NPSH	Net Positive Suction Head
RC	Reactor Coolant
RCS	Reactor Coolant System
RHR, RH	Residual Heat Removal
RWST	Refueling Water Storage Tank
SI	Safety Injection
VCT	Volume Control Tank

TABLE 6.3-6 EMERGENCY CORE COOLING SYSTEM RECIRCULATION PIPING PASSIVE FAILURE ANALYSIS LONG-TERM PHASE

Flow Path	Indication of Loss of Flow Path	Alternate Flow Path
Low Head Recirculation		
From containment sump to low head injection header via the residual heat removal pumps and the residual heat exchangers	Accumulation of water in a residual heat removal pump compartment or auxiliary building sump	Via the independent, identical low head flow path utilizing the second residual heat exchanger and residual heat removal pump
High Head Recirculation		
From containment sump to the high head injection header via residual heat removal pump, residual heat exchanger and the high head injection pumps	Accumulation of water in a residual heat removal pump and safety injection pump compartment or the auxiliary building sump or charging pump compartments	From containment sump to the high head injection headers via alternate residual heat removal pump, residual heat exchanger, safety injection or charging pump

TABLE 6.3-7 MANUAL ACTIONS REQUIRED FOR ECCS OPERATION

(BASED ON NO SINGLE FAILURE)

During the injection mode of ECCS operation, the operators are not required to take any manual actions. All equipment operates automatically as designed. The minimum time calculated for the injection mode is approximately 26 minutes. During this time, the operators verify that all ECCS pumps are operating, and monitor the RWST and Containment Building recirculation sump levels in anticipation of the transfer to the recirculation mode of ECCS operation. Component cooling water flow to the residual heat removal heat exchangers is automatically initiated on a 'T' signal. The operator verifies that this has occurred before the transfer to recirculation begins.

This table summarizes the manual operator actions required to complete the transfer from the injection mode of ECCS operation to the recirculation mode. This table assumes that no single failures have occurred before the transfer begins and also that none occur during the transfer. The actions listed are also based on the design basis large break LOCA, all ECCS pumps operating, and any loss of off-site power occurring at the initiation of the safety injection signal.

This table is not intended to be a summary of the plant procedures that are used during this event. It is simply a summary of the manual actions required to support ECCS operation without any single failures being assumed to occur. This table assumes that all equipment operates as designed.

TRANSFER TO COLD LEG RECIRCULATION

The RWST "Lo-Lo" level signal in conjunction with an 'S' single initiates the automatic opening of the containment sump isolation valves. Once operators are alerted to this, they perform the following manual actions:

1. Reset the 'S' signal.

2. Verify the containment sump isolation valves (CBS-V8/V14) are open and close both RWST suction valves (CBS-V2/V5) to the RHR and CBS pumps.

3. Close the three safety injection pump miniflow valves (SI-V89 /V90 /V93)

4. Restore power to one of the two RHR to cold leg injection isolation valves (CS-9787-1 for RH-V14 or CS-9787 for RH-V26).

5. Close the selected RHR to cold leg injection isolation valve (RH-V14 or RH-V26).

6. Open the two parallel safety injection pump to charging pump suction cross-connect valves (CS-V460 / V461).

7. Open both RHR pump discharge valves to the safety injection pump and charging pump suctions (RH-V35 / V36).

NOTE: After the completion of the manual actions outlined above, all ECCS pumps are operating with their suctions being provided from the containment sump. The ECCS is now aligned for cold leg recirculation with both RHR pumps taking suction from the containment sump and delivering flow directly to two RCS cold legs and to the suctions for the safety injection and charging pumps. The safety injection and charging pumps are delivering this flow to the RCS cold legs.

The following actions provide additional isolation of the RWST from the recirculation fluid.

8. Close the two RWST suction valves to the safety injection pumps (CBS-V47 / V51).

9. Place the two RWST-VCT Suction Interlock Selector Switches to BLOCK.

10. Close the two RWST suction valves to the charging pumps (CS-LCV-112D and E) and de-energize.

11. Remove power from the RHR to cold leg isolation valves.

At approximately 5 to 6 hours after the initiation of the accident, ECCS operation is shifted from the cold leg recirculation mode to the hot leg recirculation mode via the following manual actions:

1. Restore power to the two motor control centers required (CS-9787 or CS-9787-1).

2. Close the second RHR to cold leg injection isolation valve (RH-V14 or V26).

3. Open both RHR to hot leg injection isolation valves (RH-V32 / V70).

4. Stop No. 1 Safety injection pump.

5. Close No. 1 safety injection pump discharge cross connect valve (SI-V112).

6. Open No. 1 safety injection pump discharge hot leg recirculation isolation valve (SI-V102).

7. Start No. 1 safety injection pump.

8. Stop No. 2 safety injection pump.

9. Close No. 2 safety injection pump discharge cross connect valve (SI-V111).

10. Close the safety injection pumps common discharge isolation valve (SI-V114).

11. Open No. 2 safety injection pump discharge hot leg recirculation isolation valve (SI-V77).

12. Start No. 2 safety injection pump.

13. De-engergize the two motor control centers

The ECCS is now aligned for hot leg recirculation with both RHR pumps taking suction from the containment sump and delivering flow directly to two RCS hot legs and to the suctions of the safety injection and charging pumps. The safety injection pumps are now delivering flow to two RCS hot legs and the charging pumps are delivering flow to two RCS cold legs.

TABLE 6.3-8 EMERGENCY CORE COOLING SYSTEM SHARED FUNCTIONS EVALUATION

Component	Normal Operating Arrangement	Accident Arrangement
Refueling water storage tank	Lined up to suction of safety injection and residual heat removal pumps	Lined up to suction of centrifugal charging, safety injection and residual heat removal pumps
Centrifugal charging pumps	Lined up for charging service; suction from volume control tank, discharge via normal charging.	Suction from refueling water storage tank, discharge lined up to cold leg injection. Valves for realignment meet single failure criteria.
Residual heat removal pumps	Lined up to cold legs of reactor coolant piping	Lined up to cold legs or hot legs or reactor coolant piping
Residual heat exchangers	Lined up to cold legs of reactor coolant piping	Lined up to cold legs or hot legs of reactor coolant piping

TABLE 6.3-9 NORMAL OPERATING STATUS OF EMERGENCY CORE COOLING SYSTEM COMPONENTS FOR CORE COOLING

Number of safety injection pumps operable	2
Number of charging pumps operable	2
Number of residual heat removal pumps operable	2
Number of residual heat exchangers operable	2
Refueling water storage tank volume (gal)	477,000 (min.)
Boron concentration in refueling water storage tank (ppm)	2,400-2,600
Boron concentration in accumulator (ppm)	2,300-2,600
Number of accumulators	4
Minimum accumulator pressure (psig)	585
Nominal accumulator water volume (ft^3)	850
System valves, interlocks, and piping required for the above components which are operable	All

TABLE 6.4-1 CONTROL ROOM COMPLEX SAFETY-RELATED VENTILATION SYSTEM MALFUNCTION ANALYSIS

Component	Malfunction	Comments
Normal Makeup Air Fan	Fan trips	Two 100 percent capacity fans are provided for normal makeup air and control room pressurization requirements. The redundant fan may be manually actuated to supply the makeup air. Each fan is powered from a separate emergency bus. Loss of air flow is alarmed. Fan status lights are provided on the main control board.
Normal Makeup Air Discharge Damper	Damper fails to open, or fails to close	If the damper fails to open, the redundant damper may be opened and its associated fan actuated to provide the makeup air. If both normal, makeup air trains are unavailable because of a vital bus outage, the emergency makeup air and filtration subsystem may be utilized. If the damper fails to close, the crosstrain control scheme design ensures that the associated fan trips to ensure isolation. Both normal makeup air dampers are provided with manual handwheel override actuators. Indicating lights on the main control board monitor all damper positions via limit switches on the damper linkage.
Emergency Makeup Air Fan	Fan fails to actuate on high intake radiation, 'S' signal, or manual Actuation	Two 100 percent capacity fans are provided with a fully redundant filter unit associated with each fan. Both fans are automatically actuated on high radiation or an 'S' signal. If one fan fails on manual actuation, the redundant fan may be manually actuated. Flow indication and alarms are provided for each filter/fan train. Each fan is powered from separate emergency buses. Fan status lights are provided on the main control board.

Component	Malfunction	Comments
Emergency Makeup Air Discharge Damper	Damper fails to open on high intake radiation, 'S' signal or manual Actuation	Both dampers are automatically opened on high radiation or an 'S' signal. If one damper fails to open on manual actuation, the redundant damper and associated fan may be actuated. Indicating lights on the main control board monitor all damper positions via limit switches on the damper linkage.
Water (35-40% ethylene glycol by volume) Chiller	Water Chiller trips	Two 100% capacity chillers, each supplied from a separate emergency bus, are provided. Secure the tripped train and place the redundant train in service.
Chilled Water Pump	Chilled Water Pump trips	Four 100% capacity pumps, two per train with each train supplied from a separate emergency bus, are provided. The diverse pump can be manually aligned and started to provide chilled water flow or the redundant train can be placed into service.
Air Handling Unit (including cooling coils)	Air Handling Unit trips	Two 100% capacity air handling units, each supplied from a separate emergency bus, are provided. The redundant train may be started to supply conditioned air to the control room.
Air Handling Unit Discharge Damper	Fails to open	Each of the two 100% capacity units is provided with its own discharge damper. When the damper fails to open, the air handling unit and the corresponding chiller and the chilled water pump will all trip. The redundant train may be started. Indicating lights on the air handling unit control panel monitor all damper positions via limit switches on the damper linkage.
	Fails to close	The damper may be manually positioned through the use of the handwheel on the actuator. Indicating lights on the air handling unit control panel monitor all damper positions via limit switches on the damper linkage.

Component	Malfunction	Comments
3-Way Temperature Control Valve (TCV)	TCV fails	Each train has its own TCV, and it is designed to fail-safe to "full flow to the air handling unit cooling coils". The failed train may be secured and the redundant train may be started.
Chiller Condenser Exhaust Fan	Exhaust fan fails	Two 100% capacity exhaust fans, each supplied from a separate emergency bus, are provided. The redundant train may be started.
Exhaust Fan Control Damper	Damper fails to close on actuation of emergency makeup air subsystem and/or a high radiation signal	Two redundant isolation dampers are configured in series. Both dampers close upon actuation of the emergency makeup air fans or generation of a remote intake high radiation signal ensuring isolation of the exhaust subsystem. Indicating lights on the main control board monitor all damper positions via limit switches on the damper actuator.
Cable Spreading Room Exhaust Fan	Exhaust Fan Belt failure and continued motor operation	Since the cable spreading room ventilation system is only placed in service using administrative controls, operator action to secure the associated cable spreading room supply fan can be performed promptly. Securing the supply fan will ensure that the Control Room Complex remains at the required differential pressure with respect to the cable spreading room.

TABLE 6.5-1 COMPLIANCE OF CONTAINMENT ENCLOSURE AIR CLEANING UNITS TO REGULATORY GUIDE 1.52, REV. 2, MARCH 1978

Regulatory Guide Section	Applicability to this System	Comment Index	Regulatory Guide Section	Applicability to this System	Comment Index
C.1.a	Yes	Note 1	C.3.f	Yes	---
C.1.b	Yes	---	C.3.g	Yes	Note 11
C.1.c	Yes	---	C.3.h	Yes	---
C.1.d	Yes	---	C.3.i	Yes	Note 17
C.1.e	Yes	---	C.3.j	Yes	Note 12
C.2.a	Yes	Note 2	C.3.k	Yes	---
C.2.b	Yes	---	C.3.l	Yes	Note 13
C.2.c	Yes	---	C.3.m	Yes	---
C.2.d	Yes	Note 3	C.3.n	No	Note 5
C.2.e	Yes	---	C.3.o	Yes	---
C.2.f	Yes	---	C.3.p	Yes	---
C.2.g	Yes	Note 15	C.4.a	Yes	Note 14
C.2.h	Yes	Note 7	C.4.b	Yes	---
C.2.i	Yes	---	C.4.c	Yes	---
C.2.j	Yes	---	C.4.d	Yes	---
C.2.k	No	Note 4	C.4.e	Yes	---
C.2.l	Yes	---	C.5.a	Yes	Note 16
C.3.a	Yes	Note 8	C.5.b	Yes	Note 16
C.3.b	No	Note 9	C.5.c	Yes	Note 16
C.3.c	No	Note 2	C.5.d	Yes	Note 16
C.3.d	Yes	Note 6	C.6.a	Yes	Note 16
C.3.e	Yes	Note 10			

NOTES:

1. The design basis LOCA and rupture of a CRDM housing are the postulated design basis accidents.

2. Demisters will also serve as prefilters. No other prefilters are provided. Regulatory Guide 1.52, Revision 2, Section C.2, permits the use of demisters as prefilters for HEPA filters in an ESF System. The demister element consists of a 5½" thick, 0.006" diameter, 340 stainless steel mesh, and fibrous glass fill. The "dry" efficiency of the demister is approximately 45 percent when tested in accordance with NBS Dust Spot Test. This efficiency is similar to that of a prefilter. The demister will therefore serve a dual purpose, that of a demister and a prefilter; and there is no need to consider HEPA filter particulate loading without a prefilter for this application.

   Flow instrumentation is provided in common ductwork downstream of containment enclosure emergency exhaust filter fans. One channel of volumetric flow indication is indicated and alarmed at the MCB as well as indicated locally. Secondary flow indication is available using filter train differential pressure and fan status indication.

3. No significant pressure surges to this system are foreseen; thus, no special protective devices are needed.

4. There are no outdoor air intakes that could affect the operation of the system.

5. The system is located in the containment enclosure, the area served. Therefore, any leakage will eventually be re-routed through the cleanup system before being expelled to the atmosphere.

6. Equipment was purchased prior to issuance of Regulatory Guide 1.52, Rev. 2. HEPA filters are designed and qualified to MIL-F-51068, MIL-F-51069 and UL-586. There is no need to withstand iodine removal sprays.

7. Equipment was purchased prior to issuance of Regulatory Guide 1.52, Rev. 2. Regulatory Guide 1.89 - IEEE Std. 323, Regulatory Guide 1.30 - IEEE Std. 336, Regulatory Guide 1.100 - IEEE Std. 344, Regulatory Guide 1.118 - IEEE Std. 338, Regulatory Guide 1.32 - IEEE 308.

8. Equipment was purchased prior to issuance of Regulatory Guide 1.52, Rev. 2. Demisters are qualified to MSAR 71-45.

NOTES:

9. Heaters are not required for this unit. The ambient design conditions for the site are 88°F dry bulb with a maximum relative humidity of 74.4 percent. Section 5.5 of ANSI 509-1976 states that "approximately 70% RH" is required upstream of the moisture separator. Only 33 percent of the total air supplied to the containment enclosure area is outside air. The remainder is recirculated by the containment enclosure cooling units as explained in Section 9.4.6. The cooling units will maintain the space temperature at or below 153°F at the outside design conditions. Therefore, since no moisture is added to the Supply Air System, the relative humidity will not exceed 50 percent; which is less than the 70 percent RH required by ANSI N509.

10. Equipment was purchased prior to issuance of Regulatory Guide 1.52, Rev. 2. Filter and adsorber mounting frames are constructed and designed in accordance with Section 4.3 of ERDA 76-21.

11. Equipment was purchased prior to issuance or Regulatory Guide 1.52, Rev. 2. Filter housings, floors and doors are constructed in accordance with ERDA 76-21.

12. Equipment was purchased prior to issuance of Regulatory Guide 1.52, Rev. 2. Tray type adsorber cells are designed, constructed and tested in accordance with AACC CS-8T.

13. Equipment was purchased prior to issuance of Regulatory Guide 1.52, Rev. 2. The system fan, its mounting, and the ductwork connections are designed, constructed and tested in accordance with the requirements of Regulatory Guide 1.52, Rev. 1 and ANSI N509-1980 and ANSI N510-1980.

14. Equipment was purchased prior to issuance of Regulatory Guide 1.52, Rev. 2. Accessibility of components and maintenance are compatible with the intent of Regulatory Guide 1.52, Rev. 1.

15. Pertinent pressure drops (high delta-P across filter unit) are indicated, alarmed, and recorded at MCB.

16. In-place inspection and testing is performed in accordance with ANSI N510-11980.

17. Original charcoal was tested in accordance with ANSI N509-1976. All testing of replacement charcoal and future required periodic testing of charcoal will be in accordance with ASTM D3803-1989.

TABLE 6.5 -2 COMPLIANCE OF FUEL STORAGE BUILDING AIR CLEANING UNITS TO REGULATORY GUIDE 1.52, REV. 2, MARCH 1978

Regulatory Guide Section	Applicability to this System	Comment Index	Regulatory Guide Section	Applicability to this System	Comment Index
C.1.a	Yes	Note 1	C.3.f	Yes	- - -
C.1.b	Yes	- - -	C.3.g	Yes	Note 11
C.1.c	Yes	- - -	C.3.h	Yes	- - -
C.1.d	Yes	- - -	C.3.i	Yes	Note 16
C.1.e	Yes	- - -	C.3.j	Yes	Note 12
C.2.a	Yes	Note 2	C.3.k	Yes	- - -
C.2.b	Yes	- - -	C.3.l	Yes	Note 13
C.2.c	Yes	- - -	C.3.m	Yes	- - -
C.2.d	Yes	Note 3	C.3.n	No	Note 5
C.2.e	Yes	- - -	C.3.o	Yes	- - -
C.2.f	Yes	- - -	C.3.p	Yes	- - -
C.2.g	Yes	- - -	C.4.a	Yes	Note 14
C.2.h	Yes	Note 7	C.4.b	Yes	- - -
C.2.i	Yes	- - -	C.4.c	Yes	- - -
C.2.j	Yes	- - -	C.4.d	Yes	- - -
C.2.k	No	Note 4	C.4.e	Yes	Note 15
C.2.1	Yes	- - -	C.5.a	Yes	Note 15
C.3.a	Yes	Note 8	C.5.b	Yes	Note 15
C.3.b	Yes	Note 9	C.5.c	Yes	Note 15
C.3.c	No	Note 2	C.5.d	Yes	Note 15
C.3.d	Yes	Note 6	C.6.a	Yes	Note 15
C.3.e	Yes	Note 10			

NOTES:

1. A fuel handling accident is the postulated design basis accident.
2. Demisters will also serve as prefilters. No other prefilters are provided. Regulatory Guide 1.52, Revision 2, Section C.2, permits the use of demisters as prefilters for HEPA filters in an ESF System. The demister element consists of a 5½" thick, 0.006" diameter, 340 stainless steel mesh, and fibrous glass fill. The "dry" efficiency of the demister is approximately 45 percent when tested in accordance with NBS Dust Spot Test. This efficiency is similar to that of a prefilter. The demister will therefore serve a dual purpose, that of a demister and a prefilter; and there is no need to consider HEPA filter particulate loading without a prefilter for this application.
3. No significant pressure surges to this system are foreseen; thus, no special protective devices are needed.
4. There are no outdoor air intakes that could affect the operation of the system.
5. The system is located in the Fuel Storage Building, the area served. Therefore, any leakage will eventually be re -routed through the cleanup system before being expelled to the atmosphere.
6. Equipment was purchased prior to issuance of Regulatory Guide 1.52, Rev. 2. HEPA filters are designed and qualified to MIL -F -51068, MIL -F -51069 and UL -586. There is no need to withstand iodine removal sprays.
7. Equipment was purchased prior to issuance of Regulatory Guide 1.52, Rev. 2. Regulatory Guide 1.89 -IEEE Std. 323, Regulatory Guide 1.30 - IEEE Std. 336, Regulatory Guide 1.100 - IEEE Std. 344, Regulatory Guide 1.118 - IEEE Std. 338, Regulatory Guide 1.32 - IEEE 308.
8. Equipment was purchased prior to issuance of Regulatory Guide 1.52, Rev. 2. Demisters are qualified to MSAR 71 -45.
9. Equipment was purchased prior to issuance of Regulatory Guide 1.52, Rev. 2. Heaters are constructed to industry standards and are seismically qualified.
10. Equipment was purchased prior to issuance of Regulatory Guide 1.52, Rev. 2. Filter and adsorber mounting frames are constructed and designed in accordance with Section 4.3 of ERDA 76 -21.
11. Equipment was purchased prior to issuance or Regulatory Guide 1.52, Rev. 2. Filter housings, floors and doors are constructed in accordance with ERDA 76 -21.
12. Equipment was purchased prior to issuance of Regulatory Guide 1.52, Rev. 2. Tray type adsorber cells are designed, constructed and tested in accordance with AACC CS -8T.

13. Equipment was purchased prior to issuance of Regulatory Guide 1.52, Rev. 2. The system fan, its mounting, and the ductwork connections are designed, constructed and tested in accordance with the requirements of Regulatory Guide 1.52, Rev. 1 and ANSI N509 and N510 -1980.
14. Equipment was purchased prior to issuance of Regulatory Guide 1.52, Rev. 2. Accessibility of components and maintenance are compatible with the intent of Regulatory Guide 1.52, Rev. 1.
15. In -place inspection and testing is performed in accordance with ANSI N510 -1980.
16. Original charcoal was tested in accordance with ANSI N509 -1976. All testing of replacement charcoal and future required periodic testing of charcoal will be in accordance with ASTM D3803 -1989.

TABLE 6.5-3 COMPLIANCE OF CONTROL ROOM EMERGENCY FILTRATION SUBSYSTEM TO REGULATORY GUIDE 1.52, REV. 2. MARCH 1978

REGULATORY GUIDE SECTION	APPLICABILITY TO THIS SYSTEM	COMMENT INDEX
C.1.a	Yes	-------
C.1.b	Yes	Note 1
C.1.c	Yes	-------
C.1.d	Yes	-------
C.1.e	Yes	-------
C.2.a	Yes	Note 2
C.2.b	Yes	-------
C.2.c	Yes	-------
C.2.d	No	Note 3
C.2.e	Yes	-------
C.2.f	Yes	-------
C.2.g	Yes	Note 4
C.2.h	Yes	-------
C.2.i	Yes	-------
C.2.j	Yes	-------
C.2.k	Yes	-------
C.2.l	Yes	Note 8
C.3.a	No	Note 2
C.3.b	Yes	Note 5
C.3.c	Yes	Note 5
C.3.d	Yes	Note 5
C.3.e	Yes	Note 9, 19
C.3.f	Yes	-------
C.3.g	Yes	Note 10
C.3.h	Yes	-------
C.3.i	Yes	Note 11, 19
C.3.j	Yes	Note 12, 19
C.3.k	Yes	Note 6
C.3.l	Yes	Note 17
C.3.m	Yes	-------
C.3.n	Yes	
C.3.o	Yes	--------
C.3.p	Yes	Note 18

REGULATORY GUIDE SECTION	APPLICABILITY TO THIS SYSTEM	COMMENT INDEX
C.4.a	Yes	Note 16
C.4.b	Yes	Note 13
C.4.c	Yes	Note 14
C.4.d	Yes	Note 7
C.4.e	Yes	-------
C.5.a	Yes	Notes 7, 15
C.5.b	Yes	Notes 7, 15
C.5.c	Yes	Notes 7, 15
C.5.d	Yes	Notes 7, 15
C.6.a	Yes	Notes 7, 15

NOTE 1: The control room emergency exhaust unit is located in environmental zone CB-3 at Elevation 75' where the total of 40-year integrated radiation level is less than or equal to 1.0×10^3 rads. The other system components upstream and downstream of the unit are also located in "mild" radiation environmental zones.

NOTE 2: Demisters are not included in the filter design. The filter components for each redundant train include prefilters, an electric air heater, upstream HEPAs, an activated carbon adsorber bank, and downstream HEPAs. The piping which processes outside makeup air to the filters includes long vertical runs which will remove droplets entrained in the air stream.

NOTE 3: No accident which will cause pressure surges is postulated for the area in which the filters are located.

NOTE 4: The flow rate for each redundant filter train is indicated in the control room. High and low flow are alarmed in the control room. The pressure drop across the combined internal components for each filter train is indicated in the control room with high differential pressure generating an alarm. Pressure drops across each individual filter component are indicated locally in the control room HVAC equipment room. Additional details on system instrumentation are provided in Subsection 6.5.1.5

NOTE 5: The prefilters, air heaters, and HEPA filters were designed, constructed, and tested per ANSI N509-1980.

NOTE 6: The filter system design includes a low-flow air bleed system. A 4-inch diameter pipe with a manual isolation valve is provided to cross-connect the two redundant filter units at a point downstream of the carbon adsorber sections. During single train operation, this alignment will provide approximately 50 cfm of air flow through the carbon adsorber section of the inactive train. The configuration ensures that this low-flow cooling air is low humidity recirculation air. This satisfies the 70 percent maximum relative humidity criteria given a single active failure.

NOTE 7: System operability verification and surveillance testing will be performed in accordance with plant Technical Specifications.

NOTE 8: The atmosphere cleanup system housings and ductwork have been designed to exhibit on test a maximum, total leakage rate as defined in Section 4.12 of ANSI N509-1980. Leak tests are performed in accordance with Section 6 of ANSI N510-1980.

NOTE 9: The filter and adsorber mounting frames for Train A, except for the prefilter mounting frame, were designed and constructed prior to the issuance of this Regulatory Guide and meet the intent of ANSI N509-1980. The filter and adsorber mounting frames for Train B along with the prefilter mounting frame for Train A were designed and constructed per ANSI N509-1980.

NOTE 10: The filtration unit for Train A including floor/drains, et C., were designed and constructed prior to issuance of this Regulatory Guide and meet the intent of ANSI N509-1980. The Train B filtration unit was designed and constructed to ANSI N-509-1980.

NOTE 11: Carbon has been qualified to ANSI N509-1980*. The Train B adsorber cell is a four-inch deep bed with a minimum residence time of 0.25 seconds. The design iodine removal efficiency is consistent with that of a two-inch deep bed (95%).

NOTE 12: The adsorber cells for Train A have been designed and constructed per ANSI N509-1976 and meet the intent of ANSI N509-1980. The adsorber cells for Train A have been tested per ANSI N510-1980. The adsorber cell for Train B has been designed, constructed, and tested per ANSI N509-1980.

NOTE 13: Train B replaceable components are designed for removal from outside the filter unit.

---

* Information is historical and applies to the original charcoal installed. All testing of replacement charcoal and future required periodic testing of charcoal will be in accordance with ASTM D3803-1989.

NOTE 14: Meets requirements of Section 4.11 of ANSI N509-1980.

NOTE 15: All in-place testing/inspection is per ANSI N510-1980 requirements, with acceptance criteria of ANSI N509-1980 as applicable.

NOTE 16: The system layout for Train A was performed prior to the issuance of this Regulatory Guide, however, it meets the requirements of Section 4.7 of ANSI N509-1980 and the intent of Subsection 2.3.8 of ERDA 76-21. Train B meets the requirements of ANSI N509-1980 and ERDA 76-21.

NOTE 17: The system fan motor, mountings and ductwork connections for Train A were procured prior to issuance of this Regulatory Guide. However, they are designed and constructed to meet the intent of Sections 5.7 and 5.8 of ANSI N509-1976. They are field tested/inspected per Section 8 of ANSI N510-1980, with the acceptance criteria of ANSI N509-1980. Train B has been designed, constructed, and tested per ANSI N509-1980.

NOTE 18: The system dampers were procured prior to the assurance of this Regulatory Guide. However, they are designed, constructed, and tested per the intent of Section 5.9 of ANSI N509-1976 and ANSI N510-1975. They are field tested/inspected as a part of ductwork per ANSI N510-1980 requirements, with the acceptance criteria of ANSI N509-1980.

NOTE 19: Carbon adsorber cells ordered after May 27, 2009 have been designed and constructed in accordance with Regulatory Guide 1.52, Revision 3, June 2001. Revision 3 endorses ASME AG-1-1997, "Code on Nuclear Air and Gas Treatment" and ASME N509-1989, "Nuclear Power Plant Air Cleaning Units and Components." Revision 3 also notes that ESF Atmosphere Cleanup Systems Designed to ASME N509-1989 (or earlier versions) and tested to ASME N510-1989 (or earlier versions) are considered adequate to protect public health and safety. This exception to Regulatory Guide 1.52, Revision 2, applies only to carbon adsorbent units.

TABLE 6.5-4 CONTAINMENT ENCLOSURE EMERGENCY AIR CLEANING SYSTEM MATERIALS

Component	Parameter
1) Moisture Separator (2)	
Filtration efficiency at design air flow (2000 cfm)	99% entrained moisture
Water capacity at design air flow (2000 cfm)	3 lb/min entrained water
Case Material	Type 304 Stainless Steel
Media Material	Type 304 Stainless Steel & Fiberglass
2) HEPA Filter (4)	
Efficiency at rated flow(2000 cfm), 20% and 120% rated flow	99.97% at 0.3 microns of DOP
Dust holding capacity	4 lbs.
Case Material	409 Stainless Steel
Media Material	Fiberglass
Separator Material	None
3) Carbon Adsorber	
a. Lot Requirements (See Note 2)	Efficiency
Low Temperature	99%
Ambient Pressure	
Methyl Iodide at 95%	
RH and 25°C	
Low Temperature	99.9%
Ambient Pressure	
Elemental Iodine at 95%	
RH and 30°C	
High Temperature	99%
Ambient Pressure	
Methyl Iodide at 95%	
RH and 80°C	
Methyl Iodine in	98%
Containment at 95% RH	

Component		Parameter
	130°C, 3.7 Atm., 1 Hour	
	Load and 4 Hour Post-Sweep	
b.	Batch Requirements (See Note 2)	
	Low Temperature	97%
	Ambient Pressure	
	Methyl Iodide at 95% RH and 30°C	
	High Temperature	99%
	Ambient Pressure	
	Methyl Iodide at 95% RH and 80°C	
	Except Pre and Post Sweep at 25°C	
	Elemental	99.9% Loading
	Iodide Retention at 180°C	99.5% Retentivity
	Media	Activated Coconut Shell
	Carbon	
	Impregnating Material	KI_3
	Ignition Temperature (ASTM D3466)	330°C
	Density (ASTM D2854)	0.38g/cc (min)
	Hardness (ASTM D3802)	97%
	Mesh Size (ASTM D2862)	5% Maximum Retention on 8 90-100% thru 8 on 16 (8x12 Mesh 40-60%) (12x16 Mesh 40-60%) 5% maximum thru 16; 1% Maximum thru 18
	Depth of carbon bed	4 inches
	Total weight of carbon	804 lbs
	Carbon Bed Envelope Material	Type 304 Stainless Steel
4)	Filter Mounting Frames	Type 304 Stainless Steel
5)	Filter System Housing	Epoxy Coated Carbon Steel
6)	Ductwork	Galvanized Steel
7)	Fan	Carbon Steel

Note 1: Refer to Chapter 15 Appendix B for filter efficiencies assumed for design basis accidents.
Note 2: Testing information is historical and applies to the original charcoal installed. All testing of replacement charcoal and future required periodic testing of charcoal will be in accordance with ASTM D3803-1989.

TABLE 6.5-5 FUEL STORAGE BUILDING EMERGENCY AIR CLEANING SYSTEM MATERIALS

	Component	Parameter
1)	Moisture Separator (12)	
	Filtration efficiency at design air flow (17,000 cfm)	99% entrained moisture
	Water capacity at design air flow (17,000 cfm)	24 lb/min entrained water
	Case Material	Type 304 Stainless Steel
	Media Material	Type 304 Stainless Steel & Fiberglass
2)	Medium Efficiency Filter (12)	
	Filtration efficiency at design air flow (17,000 cfm)	80%
	Dust Holding Capacity	340 grams
	Case Material	409 Stainless Steel
	Media Material	Fiberglass
	Separator Material	None
3)	HEPA Filters (24)	
	Efficiency at rated flow(17,000 cfm), 20% and 120%	99.97% at 0.3 microns of DOP rated flow
	Dust Holding Capacity	4 lbs
	Case Material	409 Stainless Steel
	Media Material	Fiberglass
	Separator Material	None
4)	Carbon Adsorber	
	a. Lot Requirements (See Note 2)	Efficiency
	Low Temperature	99%
	Ambient Pressure	

Component	Parameter
Methyl Iodide at 95% RH and 25°C	
Low Temperature	99.9%
Ambient Pressure	
Elemental Iodine at 95%	
RH and 30°C	
High Temperature	99%
Ambient Pressure	
Methyl Iodine at 95%	
RH and 80°C	
b. Batch Requirements (See Note 2)	
Low Temperature	97%
Ambient Pressure	
Methyl Iodide at 95% RH and 30°C	
High Temperature	99%
Ambient Pressure	
Methyl Iodide at 95% RH and 80°C	
Except Pre and Post Sweep at 25°C	
Elemental	99.9% Loading
Iodine Retention at 180°C	99.5% Retentivity
Media	Activated Coconut Shell
Carbon	
Impregnating Material	KI_3
Ignition Temperature (ASTM D3466)	330°C

	Component	Parameter
	Density (ASTM D2854)	0.38 g/cc (min)
	Hardness (ASTM D3802)	97%
	Mesh Size (ASTM D2862)	5% Maximum Retention on 8 90-100% thru 8 on 16 (8x12 Mesh 40-60%) (12x16 Mesh 40-60%) 5% Maximum thru 16; 1% Maximum thru 18
	Depth of carbon bed	4 inches
	Total weight of carbon	6500 lbs
	Carbon bed envelope material	Type 304 Stainless Steel
5)	Filter Mounting Frames	Type 304 Stainless Steel
6)	Filter System Housing	Epoxy Coated Carbon Steel
7)	Ductwork	Galvanized Steel
8)	Fan	Carbon Steel

Note 1: Refer to Chapter 15 Appendix B for filter efficiencies assumed for design basis accidents.

Note 2: Testing information is historical and applies to the original charcoal installed. All testing of replacement charcoal and future required periodic testing of charcoal will be in accordance with ASTM D3803-1989.

TABLE 6.5-6 CONTROL ROOM EMERGENCY MAKEUP AIR AND FILTRATION SUBSYSTEM MATERIALS

TRAIN A FILTER

	Component	Parameter
1)	Medium Efficiency Filter (1)	
	Filtration Efficiency at Design Air Flow (1100 cfm)	80%
	Dust Holding Capacity	340 grams
	Case Material	409 Stainless Steel
	Media Material	Fiberglass
	Separator Material	None
2)	HEPA Filters (4)	
	Filtration Efficiency at Design Air Flow (1100 cfm), 20% and 120% Rated Flow	99.97% at 0.3 Microns of DOP
	Dust Holding Capacity	4 lbs.
	Case Material	409 Stainless Steel
	Media Material	Fiberglass
	Separator	None
3)	Carbon Adsorber (7 trays)	
	a. Lot Requirement (See Note 1)	
	Methyl Iodide, 80°C, 95% RH (ASTM D3803)	1% Penetration, Maximum
	Molecular Iodine, 30°C, 95% RH (ASTM D3803)	0.1 Penetration, Maximum
	b. Batch Requirement (See Note 1)	
	Molecular Iodine, 180°C (ASTM D3803)	99.5 Retentivity, Minimum
	Methyl Iodine, 30°C, 95% RH (ASTM D3803)	3% Penetration, Maximum
	Media Carbon	Activated Coconut Shell
	Impregnating Material	Iodine Salts & Tertiary Amines
	Ignition Temperature (ASTM D3466)	330°C Minimum
	Density (ASTM D2854)	0.38 g/cc Minimum
	Hardness (ASTM D3802)	92 Minimum

Note 1 Testing information is historical and applies to the original charcoal installed. All testing of replacement charcoal and future required periodic testing of charcoal will be in accordance with ASTM D3803-1989.

TRAIN A FILTER

Component	Parameter
b. Batch Requirement (See Note 1)	
Mesh Size (ASTM D2862)	Retained on #6 Sieve: 0.1% Maximum
	Retained on #8 Sieve: 5.0% Maximum
	Through #8, on #12 Sieve: 60% Maximum
	Through #12, on #16 Sieve: 40% Minimum
	Through #16 Sieve: 5.0% Maximum
	Through #18 Sieve: 1.0% Maximum
Depth of Carbon Bed	2 Inches (tray type-6 trays, 1 test tray)
Total Weight of Carbon	300 lbs. (not including test canisters)
Carbon Tray Envelope Material	Type 304 Stainless Steel
4) Filter Mounting Frames	Type 304 Stainless Steel
5) Filter System Housing	Epoxy Coated Carbon Steel
6) Ductwork/Piping	Galvanized Steel/Carbon Steel
7) Fan	Carbon Steel Housing, Aluminum Blades and Hub

TRAIN B FILTER

Same as Train A filters with the following exceptions:

1) HEPA Filters (2)	
2) Carbon Adsorber	
Depth of Carbon Bed	4 Inches
Total Weight of Carbon	390 lbs. (not including test canisters
3) Filter System Housing	Type 304 Stainless Steel
4) Fan	Carbon Steel

Note 1 Testing information is historical and applies to the original charcoal installed. All testing of replacement charcoal and future required periodic testing of charcoal will be in accordance with ASTM D3803-1989.

TABLE 6.5-7 VOLUMES OF CONTAINMENT ENCLOSURE AREAS

AREA	VOLUME (ft^3)
Containment Enclosure Annulus	524,344
Electrical Penetration Areas	84,035
Mechanical Penetration Areas	70,320
RHR and SI Equipment Vaults	102,816
Containment Enclosure Equipment Area	92,568
Charging Pump Areas	12,000

TABLE 6.5-8 CONTAINMENT OPERATION FOLLOWING A DESIGN BASIS ACCIDENT

General

- Type of Structure	Concrete cylinder with hemispherical dome and welded steel liner
- Fission Product Removal System	Water/NaOH building spray
- Free Volume	2.715×10^6 ft^3
- Hydrogen Purge Mode	Containment internal recombiners with backup charcoal filtered purge to environment

Time Dependent Parameters	Anticipated	Conservative
- Leak Rate of Containment (percent of building volume per day)		
0-24 hours	0.10	0.20
24 hours-30 days	0.05	0.10
- Containment Enclosure Emergency Exhaust Filter Bypass (percent of primary containment leakage)		
0-24 hours	7.5	15.0
24 hours-30 days	3.75	7.5

TABLE 6.8-1 EMERGENCY FEEDWATER PUMP DATA

Total Number Per Unit	2
Electric Motor-Driven	1
Turbine-Driven	1
Design Flow (each)	710 gpm
Design Basis Flow (each)	≥650 gpm
Design Head	3050 ft. (1320 psi)
Feedwater Design Temperature	50-100°F
Required BHP	770
Motor Size, HP	900
Turbine Rating, HP	900

TABLE 6.8-2 EMERGENCY FEEDWATER SYSTEM FAILURE ANALYSIS

Active Failure Concurrent with a Feedwater System Pipe Break (One SG* Faulted)

COMPONENT	ACTIVE FAILURE	SYSTEM RESPONSE
Emergency Feed Pump	Pump fails to start (loss of power source)	Second pump starts and provides required flow to the intact SGs. Flow sensing elements identify and isolate faulted SG.
Flow Control Valve	One of two valves in line to faulted SG fails to close	No effect on system response. The second (redundant) valve in line closes to isolate the faulted SG.
Flow Control Valve	Valve in line to intact SG closes on spurious signal	Two pumps start; flow sensing elements identify and isolate faulted SG. Pumps provide the required flow to the two intact SGs.
Check Valve in Pump Discharge Piping	Check valve fails to open; flow from one pump blocked	Second pump provides required flow to the three intact SGs. Flow sensing elements identify and isolate faulted SG.

* SG - steam generator

SEABROOK STATION
UPDATED FINAL SAFETY ANALYSIS REPORT

CHAPTER 6
ENGINEERED SAFETY FEATURES

FIGURES

6.2-1	Containment Pressure Response Following DE Pump Suction Guillotine (Minimum Safety Injection)
6.2-2	Containment Temperature Response Following DE Pump Suction Guillotine (Minimum Safety Injection)
6.2-3	Sump Water Temperature Response Following DE Pump Suction Guillotine (Minimum Safety Injection)
6.2-4	Containment Pressure Response Following DE Pump Suction Guillotine (Maximum Safety Injection)
6.2-5	Containment Temperature Response Following DE Pump Suction Guillotine (Maximum Safety Injection)
6.2-6	Sump Water Temperature Response Following DE Pump Suction Guillotine (Maximum Safety Injection)
6.2-7	Containment Pressure Response Following 0.6 DE Pump Suction Guillotine (Minimum Safety Injection)
6.2-8	Containment Temperature Response Following 0.6 DE Pump Suction Guillotine (Minimum Safety Injection)
6.2-9	Sump Water Temperature Response Following 0.6 DE Pump Suction Guillotine (Minimum Safety Injection)
6.2-10	Containment Pressure Response Following 3 ft2 Pump Suction Split (Minimum Safety Injection)
6.2-11	Containment Temperature Response Following 3 ft2 Pump Suction Split (Minimum Safety Injection)
6.2-12	Sump Water Temperature Response Following 3 ft2 Pump Suction Split (Minimum Safety Injection)
6.2-13	Containment Pressure Response Following DE Cold-Leg Guillotine (Minimum Safety Injection)

6.2-14	Containment Temperature Response Following DE Cold-Leg Guillotine (Minimum Safety Injection)
6.2-15	Sump Water Temperature Response Following DE Cold-Leg Guillotine (Minimum Safety Injection)
6.2-16	Containment Pressure Response Following DE Hot-Leg Guillotine (Minimum Safety Injection)
6.2-17	Containment Temperature Response Following DE Hot-Leg Guillotine (Minimum Safety Injection)
6.2-18	Sump Water Temperature Response Following DE Hot-Leg Guillotine (Minimum Safety Injection)
6.2-19	Condensing Heat Transfer Coefficient Following DE Pump Suction Guillotine with Maximum Injection and Minimum Spray (DBA)
6.2-20	Containment Response Following Full DE Main Steam Line Break at Hot Shutdown with One Spray Train Failure
6.2-21	Containment Temperature Response Following Full DE Main Steam Line Break at Hot Shutdown with One Spray Train Failure
6.2-22	Containment Pressure Response Following Full DE Main Steam Line Break at 102% Power with Broken-Loop MSIV Failed
6.2-23	Containment Temperature Response Following Full DE Main Steam Line Break at 102% Power with Broken-Loop MSIV Failed
6.2-24	Effective Heat Transfer Coefficients for Passive Heat Sinks- Full DE Main Steam Line Break at Hot Shutdown with One Spray Train Failed
6.2-25	Effective Heat Transfer Coefficients for Passive Heat Sinks for Full DE Main Steam Line Break at 102% Power with Broken-Loop MSIV Failed
6.2-26	Vertical Section through Reactor Cavity
6.2-27	Plan View of Reactor Cavity at Elevation of Nozzles
6.2-29	Section Drawing of Steam Generator Compartment Parallel to Hot Leg
6.2-30	Section Drawing of Steam Generator Compartment Parallel to Cold Leg
6.2-31	Plan Drawing of Steam Generator Compartment at Elevation (-)1'-7"
6.2-32	Plan Drawing of Steam Generator Compartment at Elevation 16'-6"
6.2-33	Plan Drawing of Steam Generator Compartment at Elevation 22'-0"
6.2-34	Plan Drawing of Steam Generator Compartment at Elevation 25'-6"
6.2-35	Section Drawing of Pressurizer Compartment
6.2-36	Plan Drawing of Pressurizer Compartment from Elevation 16'-6" to Elevation 0'-0"

6.2-37	Plan Drawing of Pressurizer Compartment from Elevation 22'-0" to Elevation 16'-0"
6.2-38	Plan Drawing of Pressurizer Compartment from Elevation 25'-0" to Elevation 22' -0"
6.2-39	Plan Drawing of Pressurizer Compartment from Elevation 45'-0" to Elevation 25'-0"
6.2-40	Plan Drawing of Pressurizer Compartment at Elevation 57'-0"
6.2-41	Plan and Elevation Drawings of Pressurizer Skirt Cavity
6.2-42	Elevation Drawing of Pressurizer Skirt Cavity
6.2-54	Pressurizer Compartment Nodalization (15 Node, 23 Node, 29 Node)
6.2-55	Horizontal Pressure Profiles around Pressurizer at Break Location
6.2-56	Pressurizer Vertical Pressure Profile Passing through Break Node
6.2-57	Transient Forces on Pressurizer (Y-Force, X-Force)
6.2-58	Transient Moments on Pressurizer (X-Moment Y-Moment)
6.2-59	5 Node Pressurizer Skirt Cavity Nodalization for Surge Line Rupture
6.2-60	6 Node Pressurizer Skirt Cavity Nodalization for Surge Line Rupture
6.2-69	Pressure Transient in Pressurizer Compartment Following Spray Line Rupture at Elevation 34'-0"
6.2-70	Differential Pressure Transients in Pressurizer Compartment Following Spray Line Rupture at Elevation 34'-0"
6.2-71	Pressurizer Skirt Cavity Pressure Response (6-Node Model)
6.2-74	Containment Spray System
6.2-75	Engineered Safety Features Flow Diagram
6.2-76	Containment Structure Piping Zone 57F - Plan at Elevation 119'-0"
6.2-77	Containment Structure Piping Zones 57E and F Sections
6.2-78	Spray Pump - NPSH
6.2-79	Containment Steel Recirculation Sump Screen Details
6.2-80	Loop A Spray Pattern - Plan at Elevation 25'-0"
6.2-81	Loop B Spray Pattern- Plan at Elevation 25'-0"
6.2-82	Spray Loop A Coverage Pattern
6.2-83	Spray Loop B Coverage Pattern
6.2-84	Particle Size vs. Number Percentage for #1713A Nozzle

6.2-85	Particle Size vs. Volume Percentage for #1713A Nozzle
6.2-86	Particle Size vs. Terminal Velocity
6.2-87	Energy Content of the Containment Atmosphere after Design Basis LOCA
6.2-88	Energy Content of the Containment Sump after Design Basis LOCA
6.2-89	Integrated Energy Absorbed by Structural Heat Sinks after Design Basis LOCA
6.2-90	Integrated Energy Removed from the Containment by Heat Exchangers after Design Basis LOCA
6.2-91	Isolation Valve Diagrams
6.2-92	Combustible Gas Control System
6.2-94	Electric Hydrogen Recombiner
6.2-95	Schematic Electric Recombiner System
6.2-96	Containment Hydrogen Concentration with and without Recombiner
6.2-97	Containment Hydrogen Concentration with and without Purging
6.3-1	Safety Injection System Overview
6.3-2	Safety Injection System Low Head Injection System Detail
6.3-3	Safety Injection System Low Head Injection Accumulators Detail
6.3-4	Safety Injection System Intermediate Head Injection System Detail
6.3-5	Safety Injection System High Head Injection System Detail
6.3-6	Residual Heat Removal System Process Flow Diagram
6.3-7	Residual Heat Removal Pump Performance Curve
6.3-8	Charging Pump Performance Curve
6.3-9	Safety Injection Pump Performance Curve
6.3-10	Refueling Water Storage Tank
6.4-1	East Makeup Air Intake Protection
6.4-2	West Makeup Air Intake
6.8-1	Emergency Feedwater System Overview
6.8-2	Emergency Feedwater System Details
6.8-3	Head and Capacity Curves for Emergency Feedwater Pumps and Startup Feedwater Pump

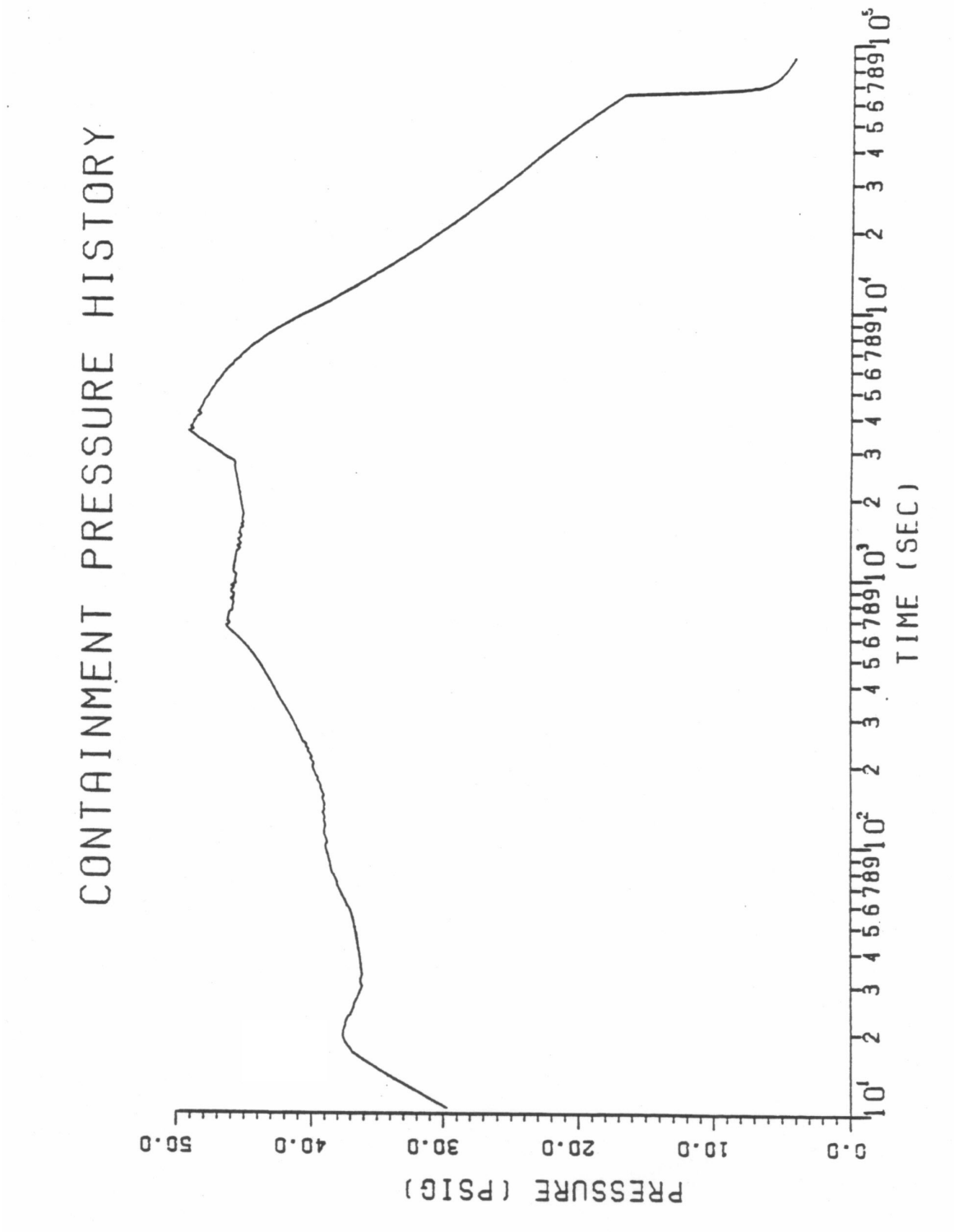

Note: This figure presents results related to the long-term LOCA containment response analysis of record. Section 6.2.1.8 contains a discussion of the results of this analysis of record, as compared with the long-term LOCA containment response results at an analyzed core power level of 3659 MWt.

SEABROOK STATION UPDATED FINAL SAFETY ANALYSIS REPORT	Containment Pressure Response Following DE Pump Suction Guillotine (Minimum Safety Injection)	
		Figure 6.2-1

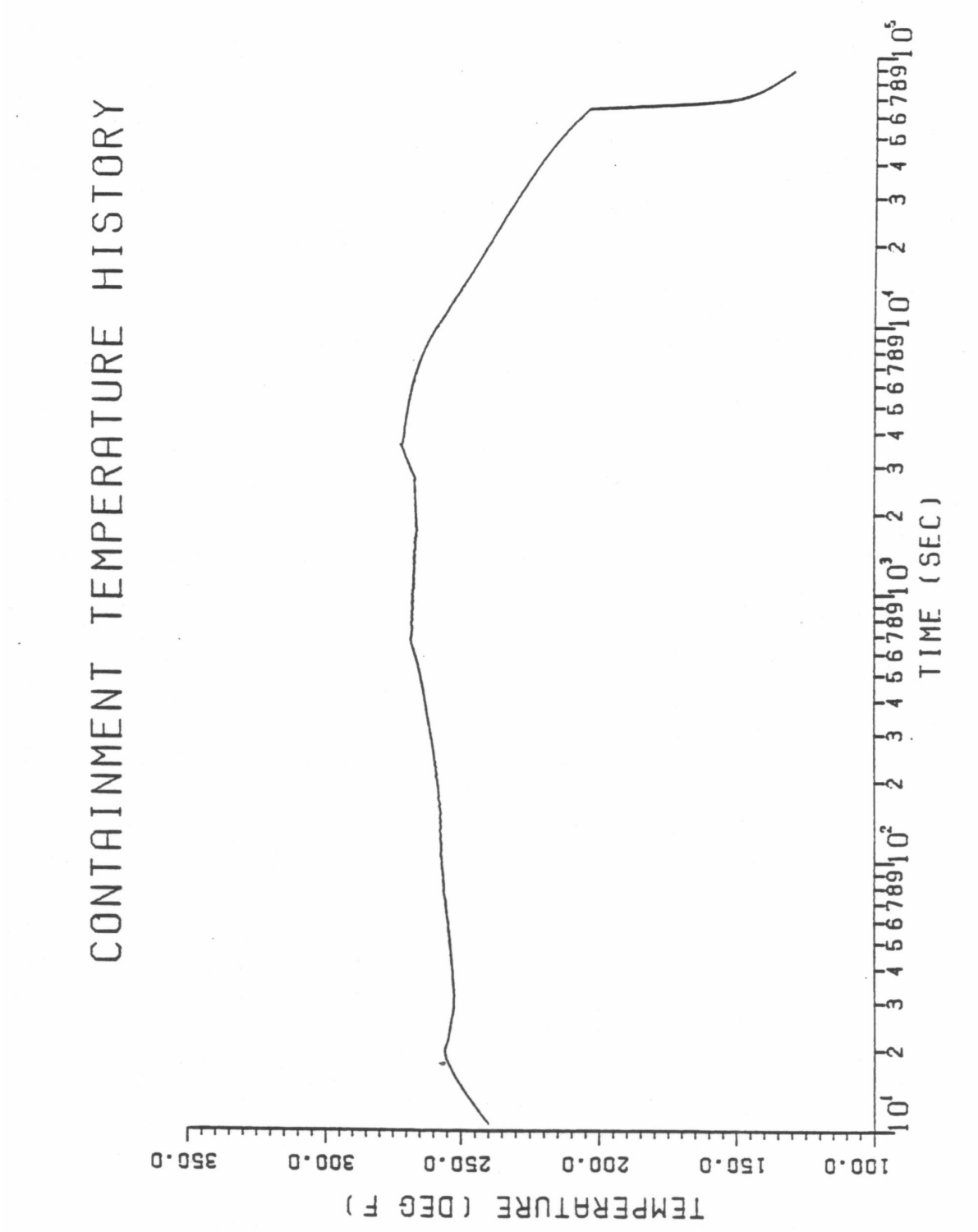

Note: The figure presents results related to the long-term LOCA containment response analysis of record. Section 6.2.1.8 contains a discussion of the results of this analysis of record, as compared with the long-term LOCA containment response results at an analyzed core power level of 3659 MWt.

SEABROOK STATION UPDATED FINAL SAFETY ANALYSIS REPORT	Containment Temperature Response Following DE Pump Suction Guillotine (Minimum Safety Injection)	
		Figure 6.2-2

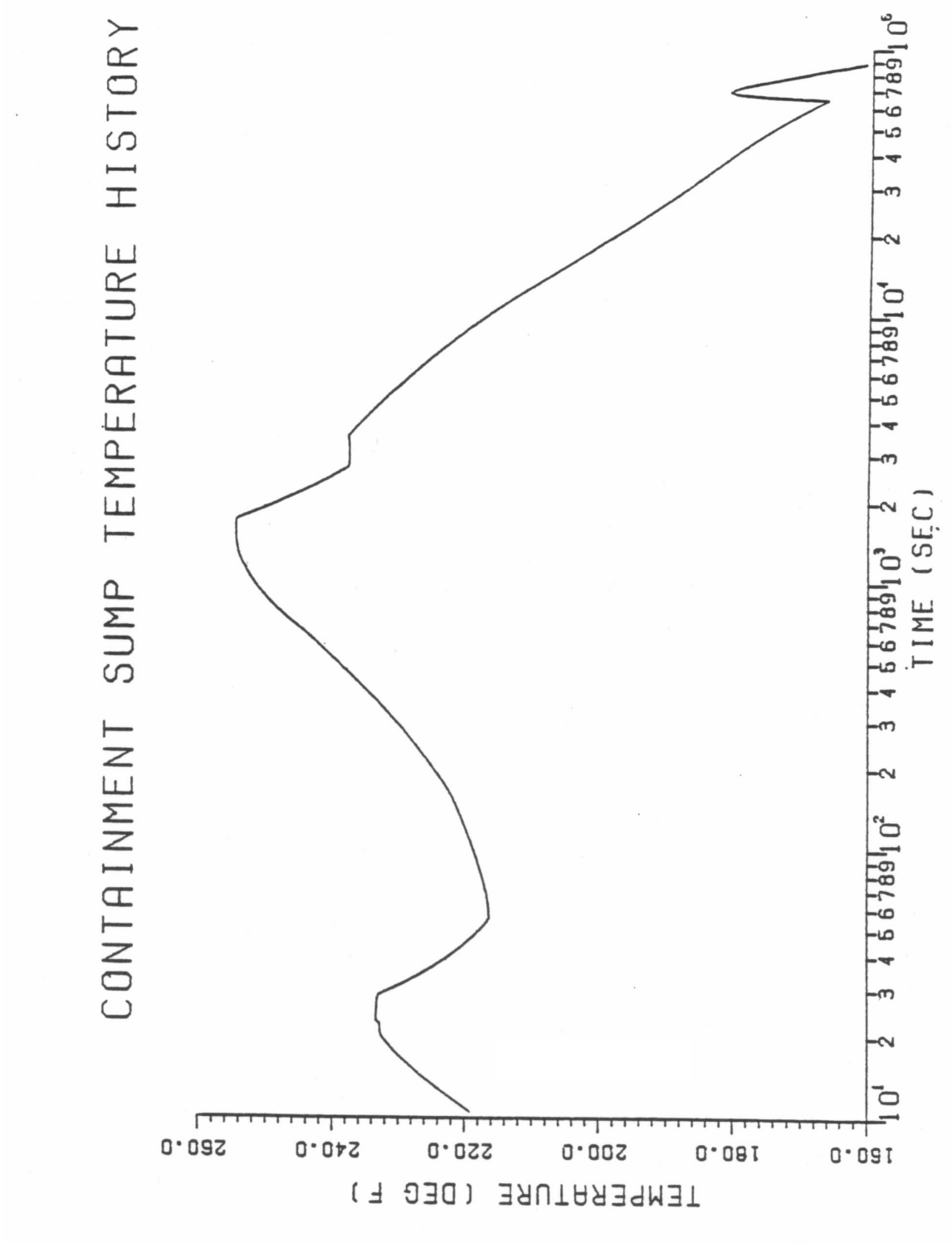

Note: This figure presents results related to the long-term LOCA containment response analysis of record. Section 6.2.1.8 contains a discussion of the results of this analysis of record, as compared with the long-term LOCA containment response results at an analyzed core power level of 3659 MWt.

SEABROOK STATION UPDATED FINAL SAFETY ANALYSIS REPORT	Sump Water Temperature Response Following DE Pump Suction Guillotine (Minimum Safety Injection)	
		Figure 6.2-3

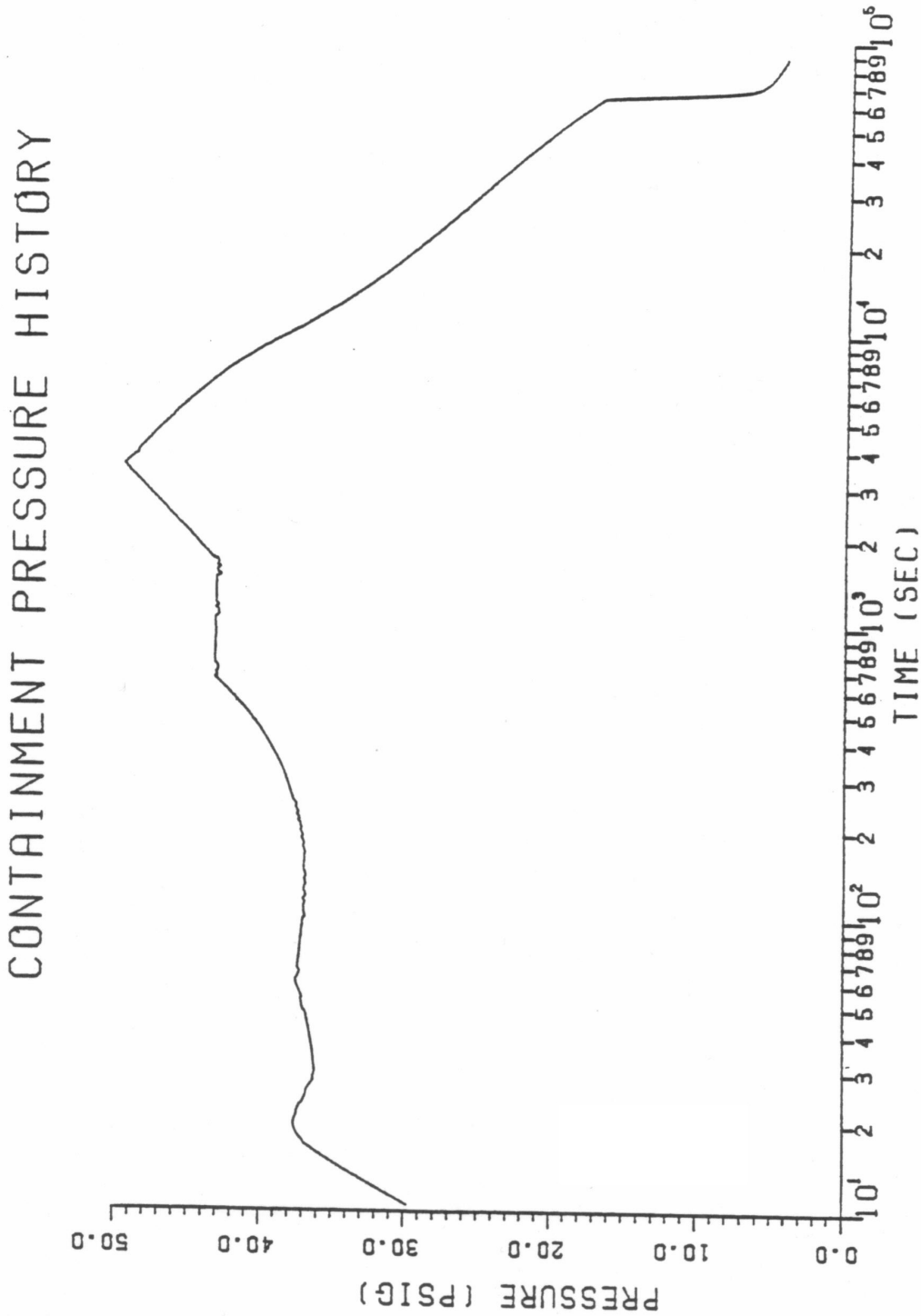

Note: This figure presents results related to the long-term LOCA containment response analysis of record. Section 6.2.1.8 contains a discussion of the results of this analysis of record, as compared with the long-term LOCA containment response results at an analyzed core power level of 3659 MWt.

SEABROOK STATION UPDATED FINAL SAFETY ANALYSIS REPORT	Containment Pressure Response Following DE Pump Suction Guillotine (Maximum Safety Injection)	
		Figure 6.2-4

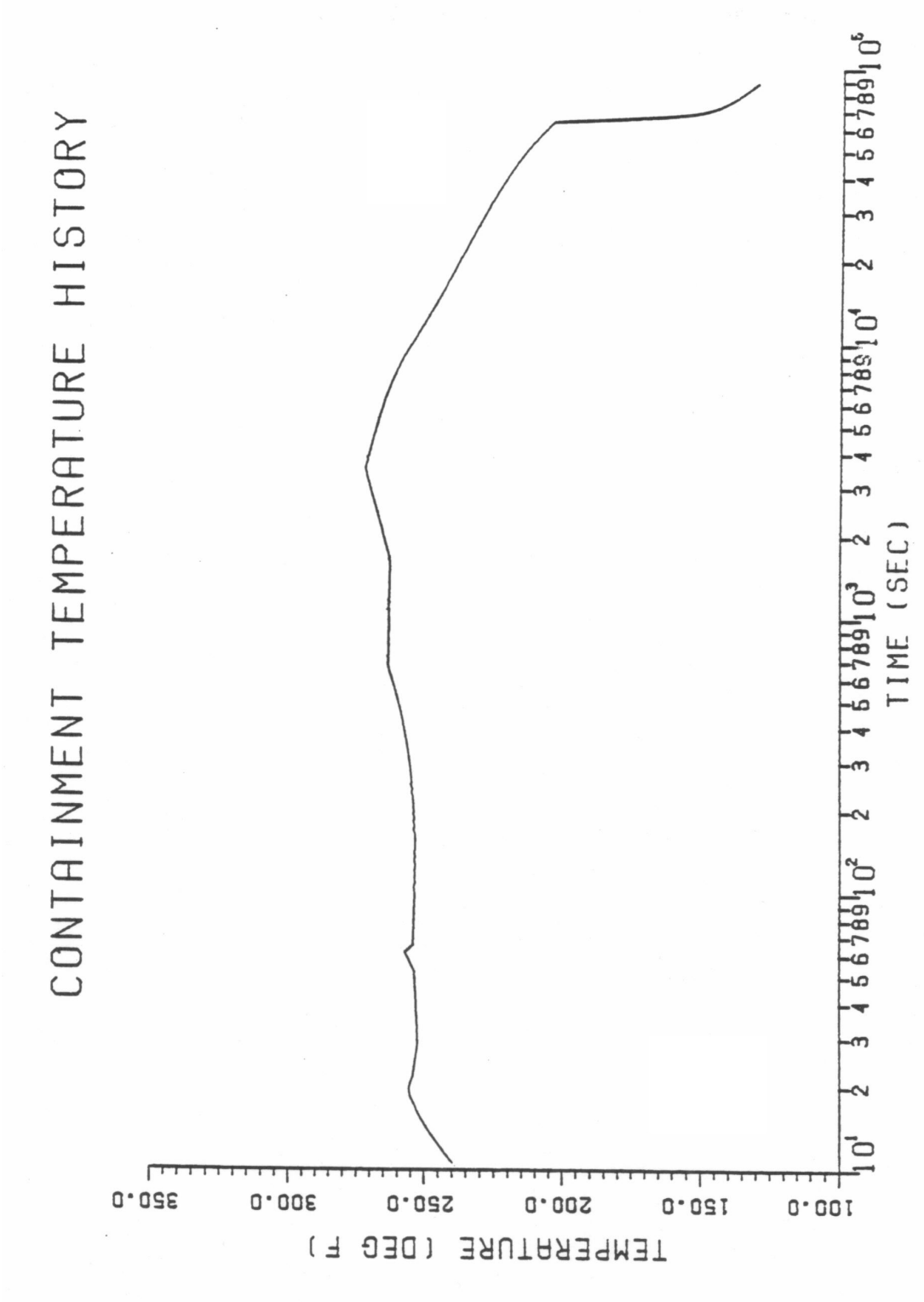

Note: This figure presents results related to the long-term LOCA containment response analysis of record. Section 6.2.1.8 contains a discussion of the results of this analysis of record, as compared with the long-term LOCA containment response results at an analyzed core power level of 3659 MWt.

SEABROOK STATION UPDATED FINAL SAFETY ANALYSIS REPORT	Containment Temperature Response Following DE Pump Suction Guillotine (Maximum Safety Injection)	
		Figure 6.2-5

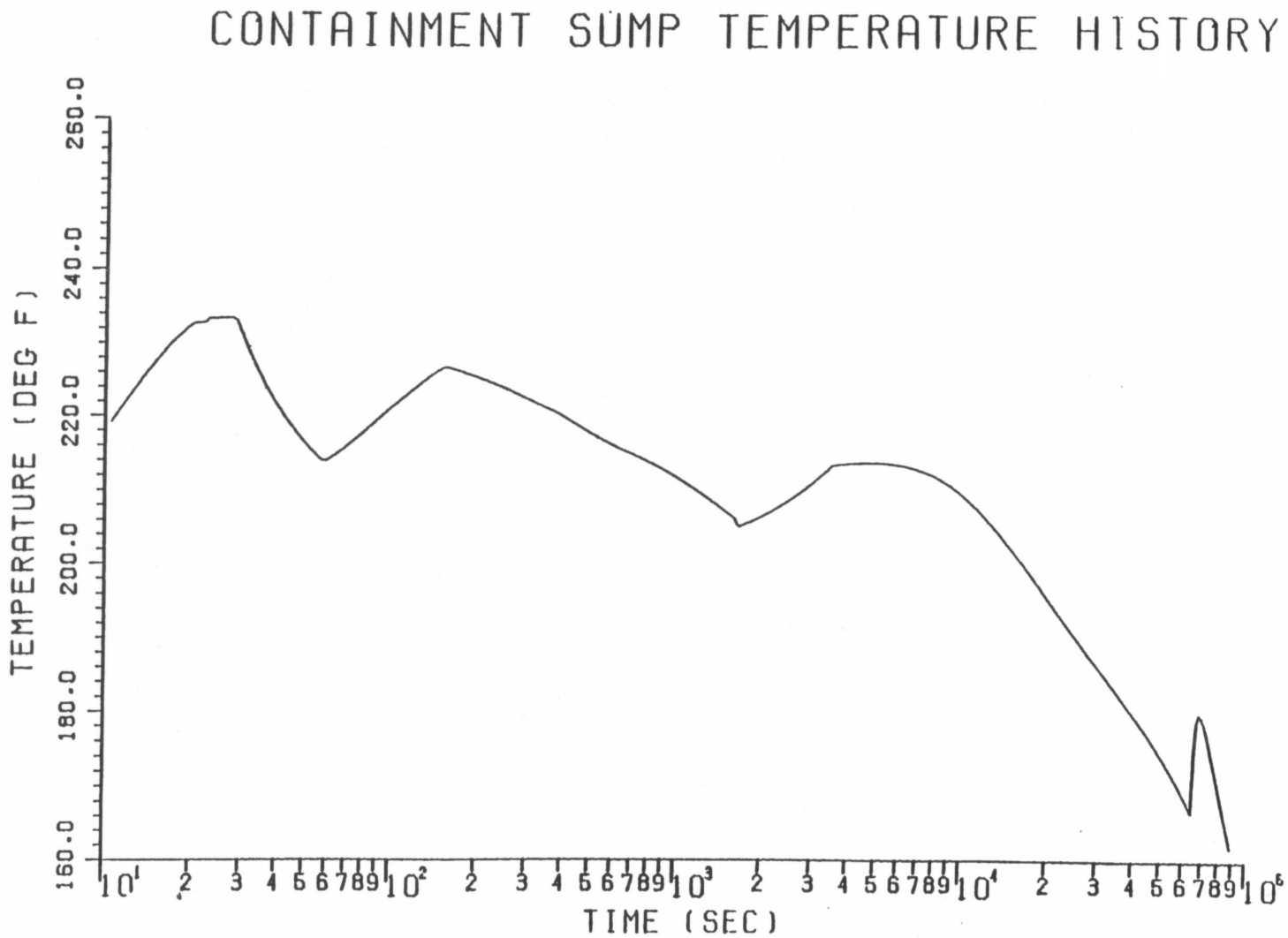

Note: This figure presents results related to the long-term LOCA containment response analysis of record. Section 6.2.1.8 contains a discussion of the results of this analysis of record, as compared with the long-term LOCA containment response results at an analyzed core power level of 3659 MWt.

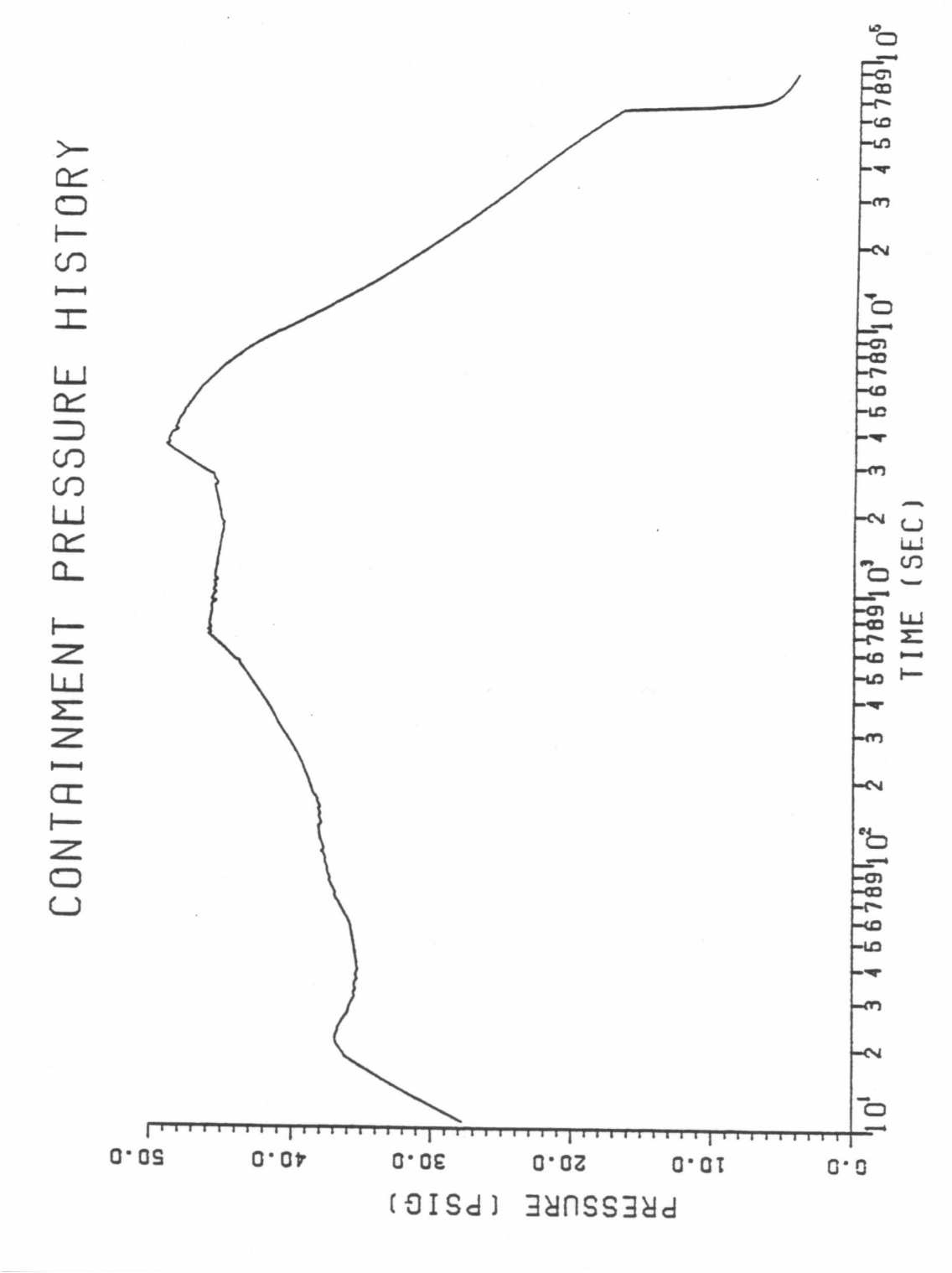

Note: This figure presents results related to the long-term LOCA containment response analysis of record. Section 6.2.1.8 contains a discussion of the results of this analysis of record, as compared with the long-term LOCA containment response results at an analyzed core power level of 3659 MWt.

SEABROOK STATION UPDATED FINAL SAFETY ANALYSIS REPORT	Containment Pressure Response Following 0.6 DE Pump Suction Guillotine (Minimum Safety Injection)	
		Figure 6.2-7

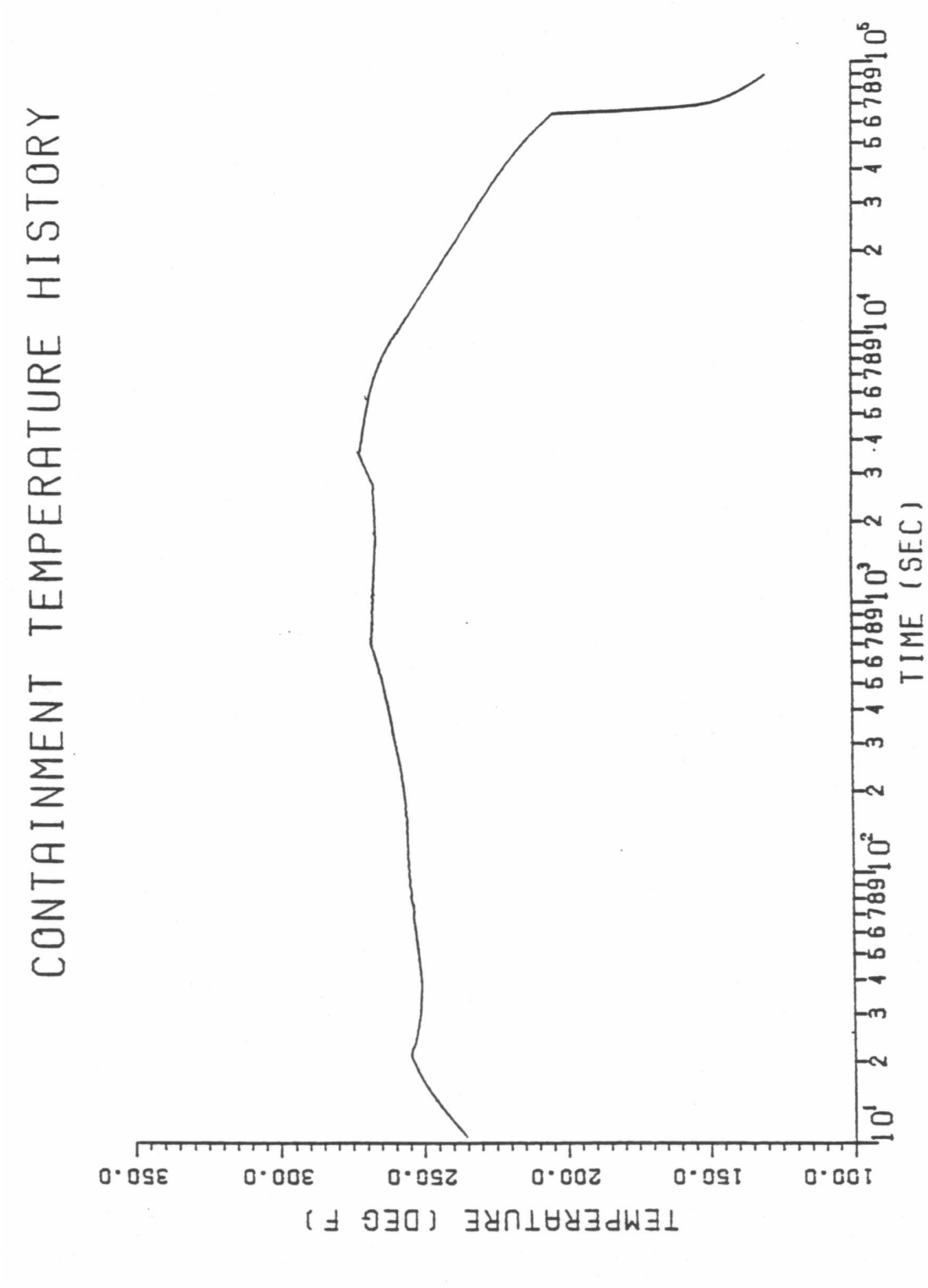

Note: This figure presents results related to the long-term LOCA containment response analysis of record. Section 6.2.1.8 contains a discussion of the results of this analysis of record, as compared with the long-term LOCA containment response results at an analyzed core power level of 3659 MWt.

SEABROOK STATION UPDATED FINAL SAFETY ANALYSIS REPORT	Containment Temperature Response Following 0.6 DE Pump Suction Guillotine (Minimum Safety Injection)	
		Figure 6.2-8

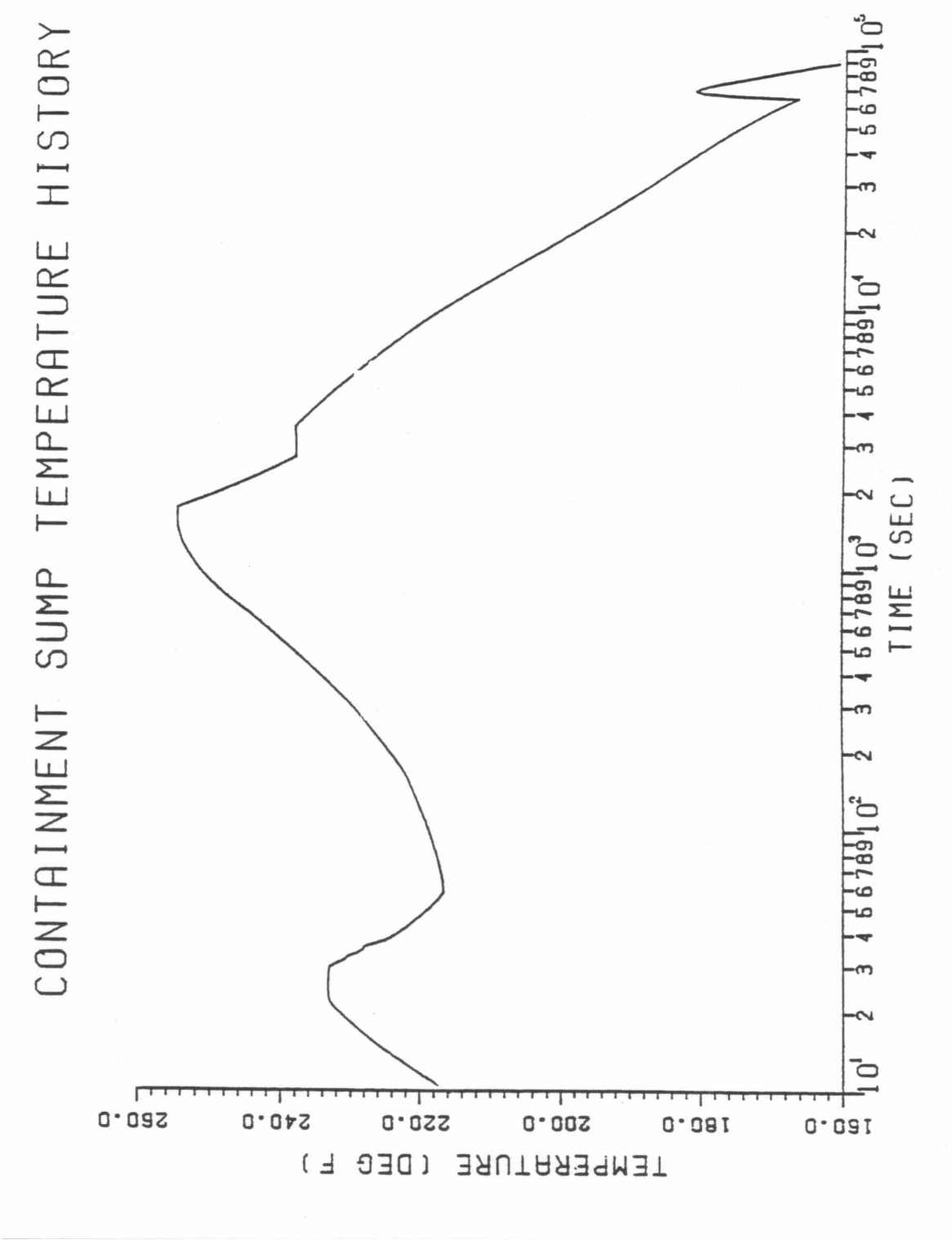

Note: This figure presents results related to the long-term LOCA containment response analysis of record. Section 6.2.1.8 contains a discussion of the results of this analysis of record, as compared with the long-term LOCA containment response results at an analyzed core power level of 3659 MWt.

SEABROOK STATION UPDATED FINAL SAFETY ANALYSIS REPORT	Sump Water Temperature Response Following 0.6 DE Pump Suction Guillotine (Minimum Safety Injection)	
		Figure 6.2-9

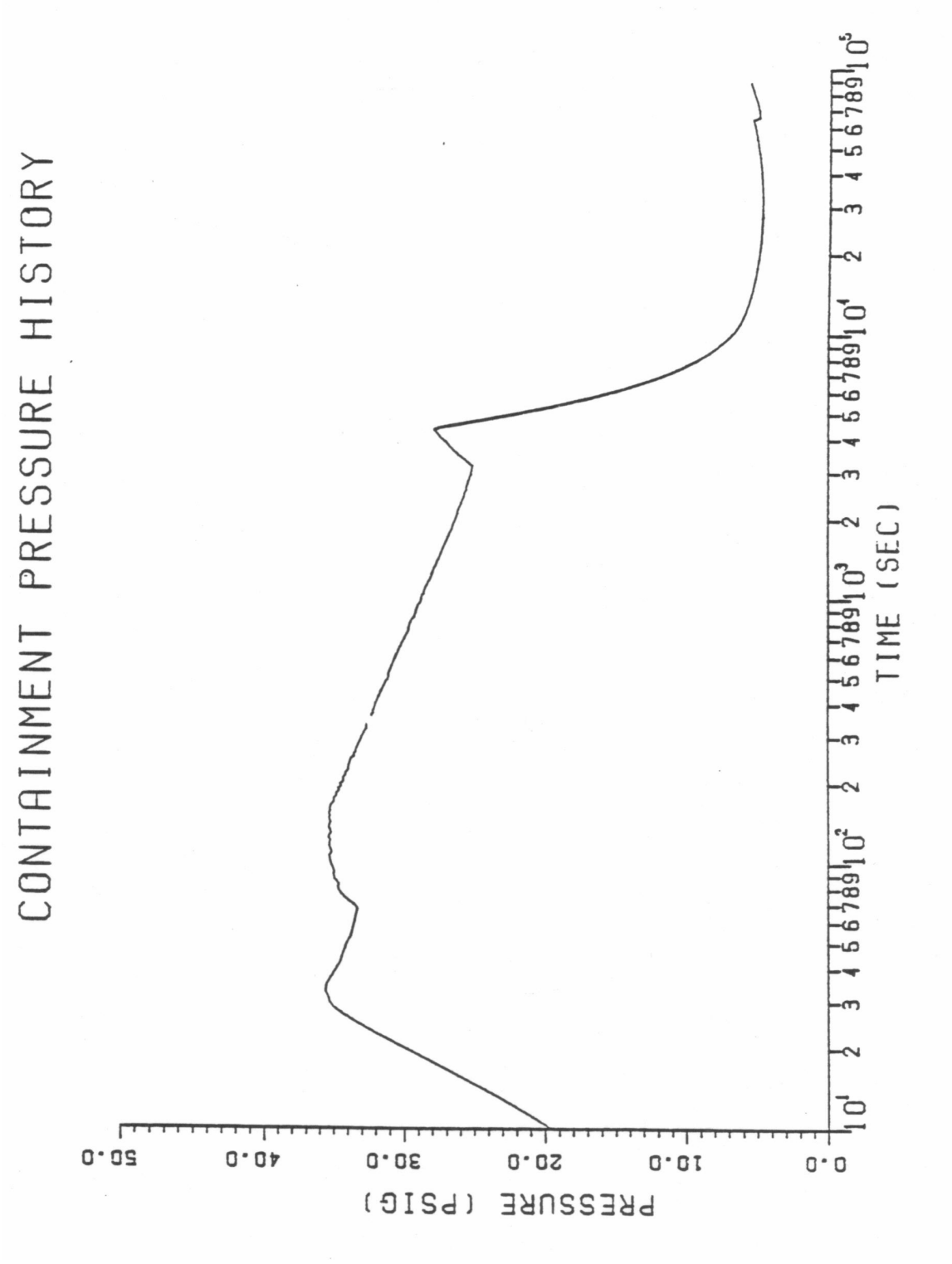

Note: This figure presents results related to the long-term LOCA containment response analysis of record. Section 6.2.1.8 contains a discussion of the results of this analysis of record, as compared with the long-term LOCA containment response results at an analyzed core power level of 3659 MWt.

SEABROOK STATION UPDATED FINAL SAFETY ANALYSIS REPORT	Containment Pressure Response Following 3 ft^2 Pump Suction Split (Minimum Safety Injection)	
		Figure 6.2-10

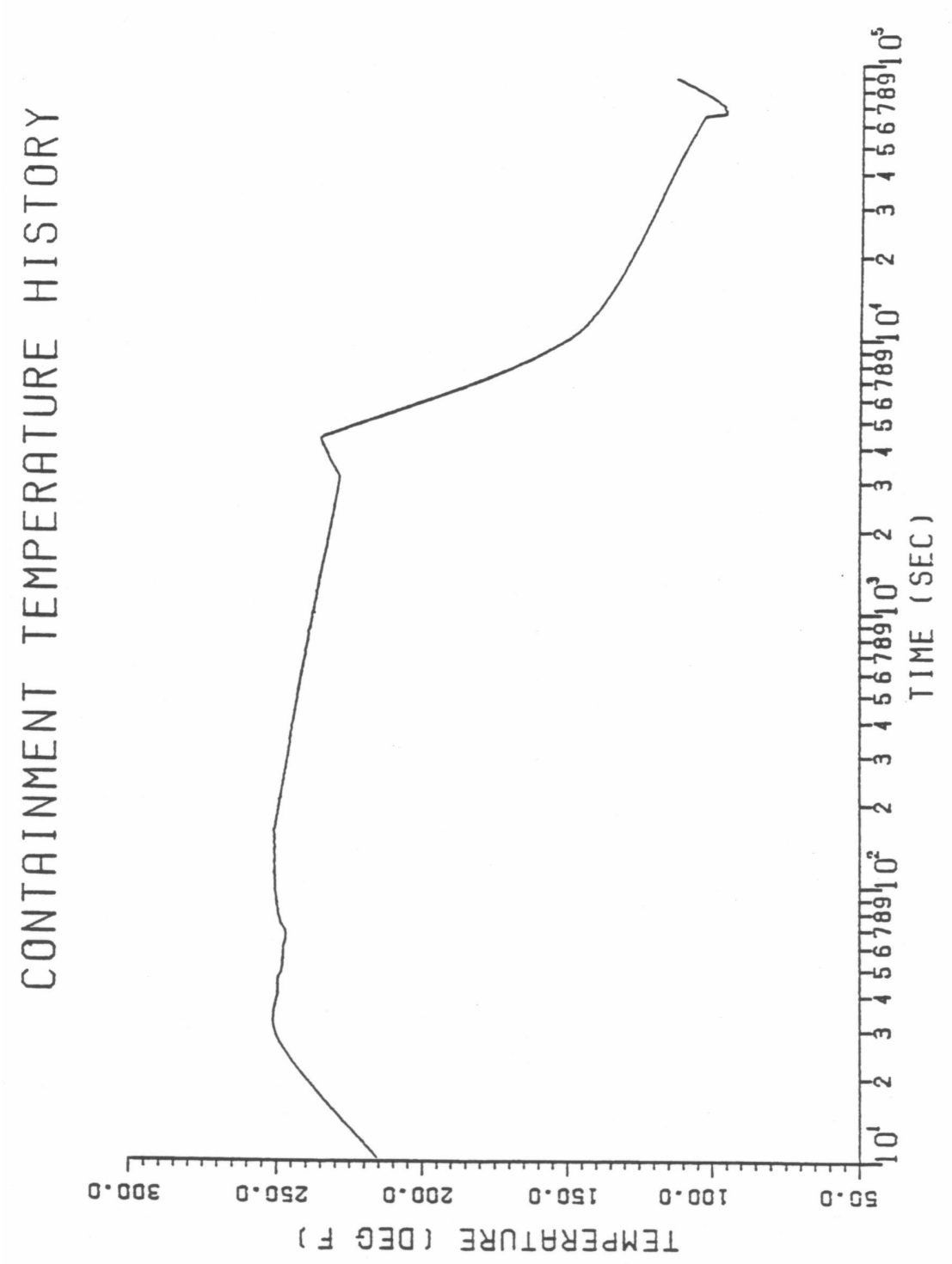

Note: This figure presents results related to the long-term LOCA containment response analysis of record. Section 6.2.1.8 contains a discussion of the results of this analysis of record, as compared with the long-term LOCA containment response results at analyzed core power level of 3659 MWt.

SEABROOK STATION UPDATED FINAL SAFETY ANALYSIS REPORT	Containment Temperature Response Following 3 ft^2 Pump Suction Split (Minimum Safety Injection)	
		Figure 6.2-11

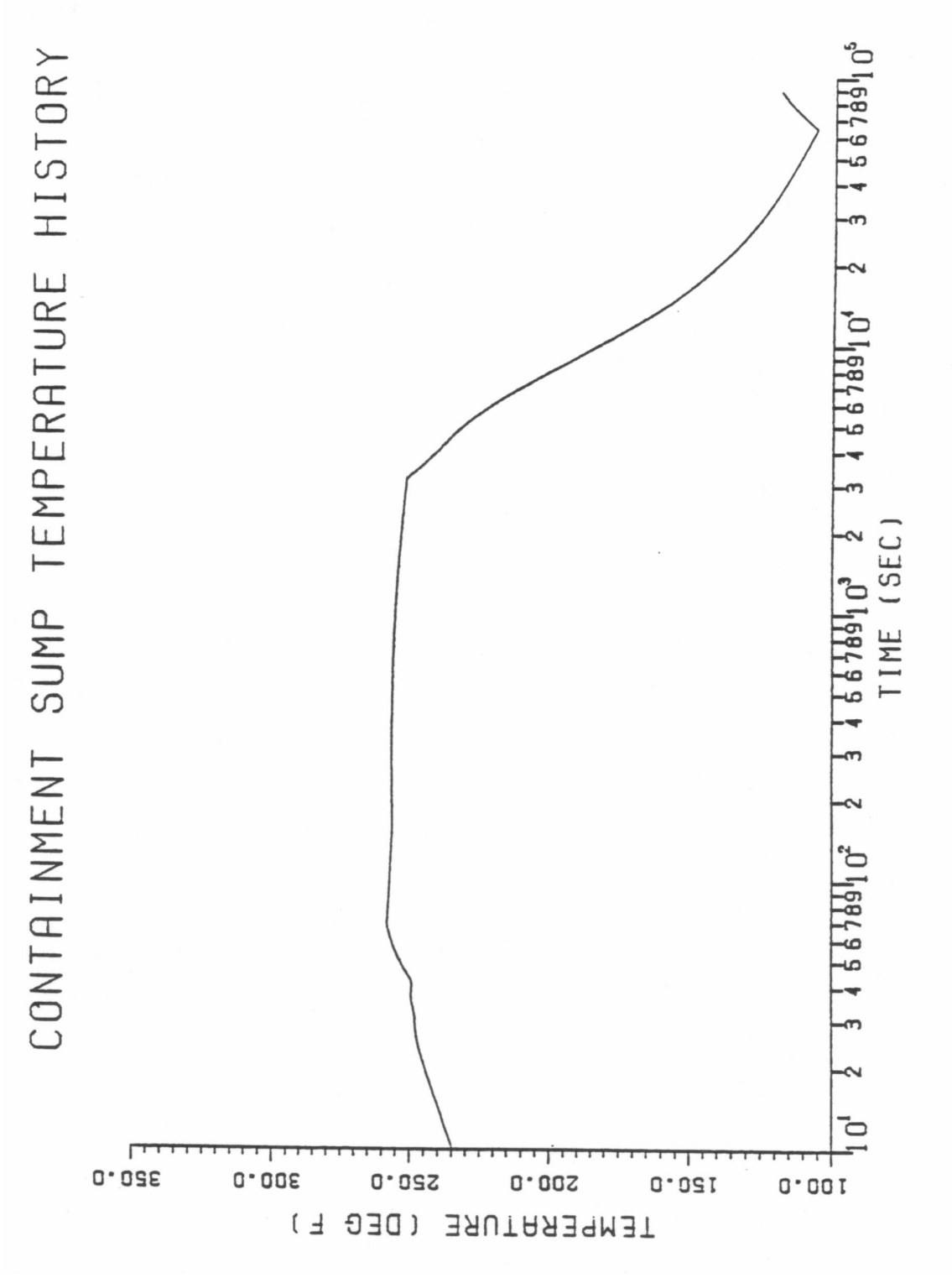

Note: This figure presents results related to the long-term LOCA containment response analysis of record. Section 6.2.1.8 contains a discussion of the results of this analysis of record, as compared with the long-term LOCA containment response results at an analyzed core power level of 3659 MWt.

SEABROOK STATION UPDATED FINAL SAFETY ANALYSIS REPORT	Sump Water Temperature Response Following 3 ft^2 Pump Suction Split (Minimum Safety Injection)	
		Figure 6.2-12

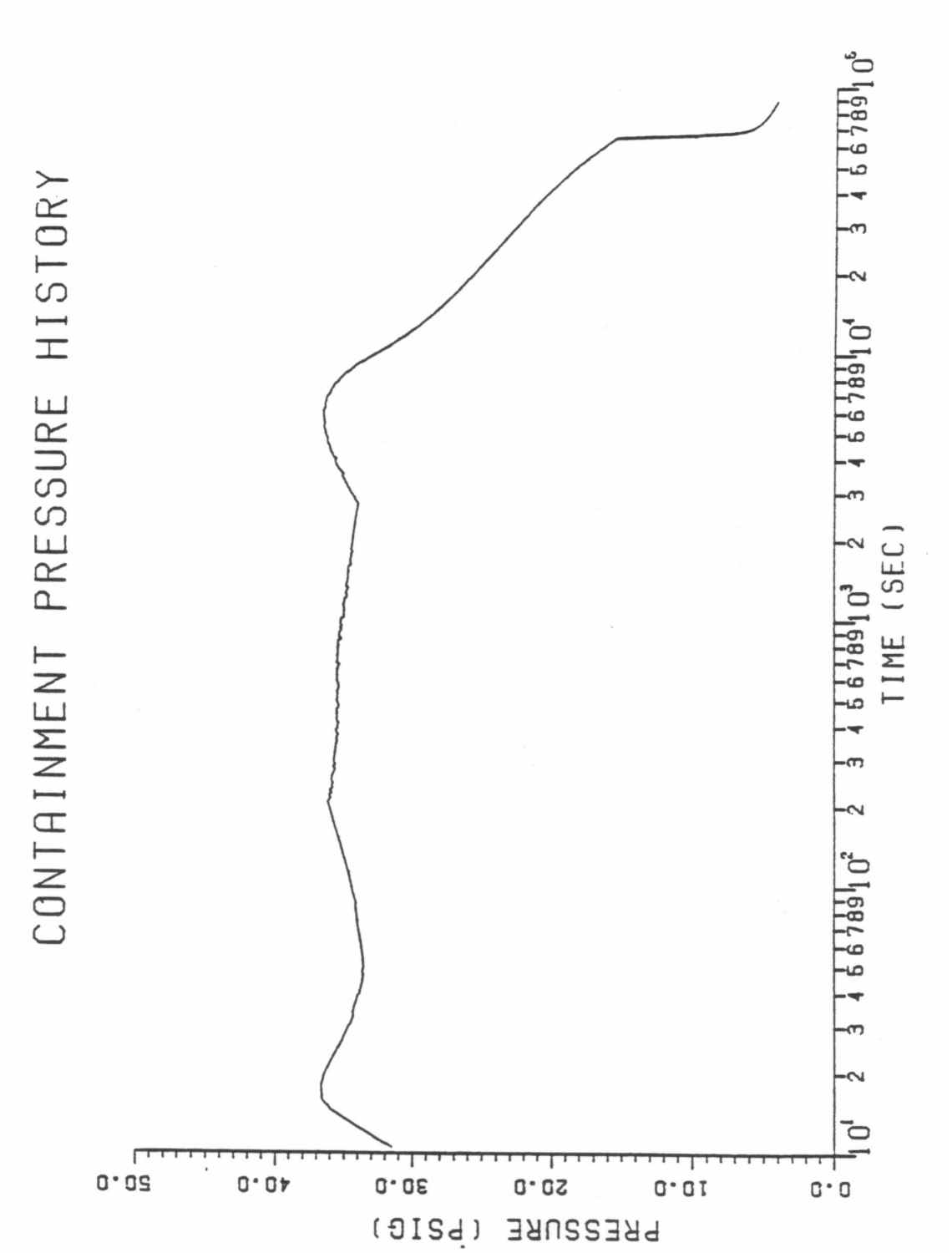

Note: This figure presents results related to the long-term LOCA containment response analysis of record. Section 6.2.1.8 contains a discussion of the results of this analysis of record, as compared with the long-term LOCA containment response results at an analyzed core power level of 3659 MWt.

SEABROOK STATION UPDATED FINAL SAFETY ANALYSIS REPORT	Containment Pressure Response Following DE Cold-Leg Guillotine (Minimum Safety Injection)	
		Figure 6.2-13

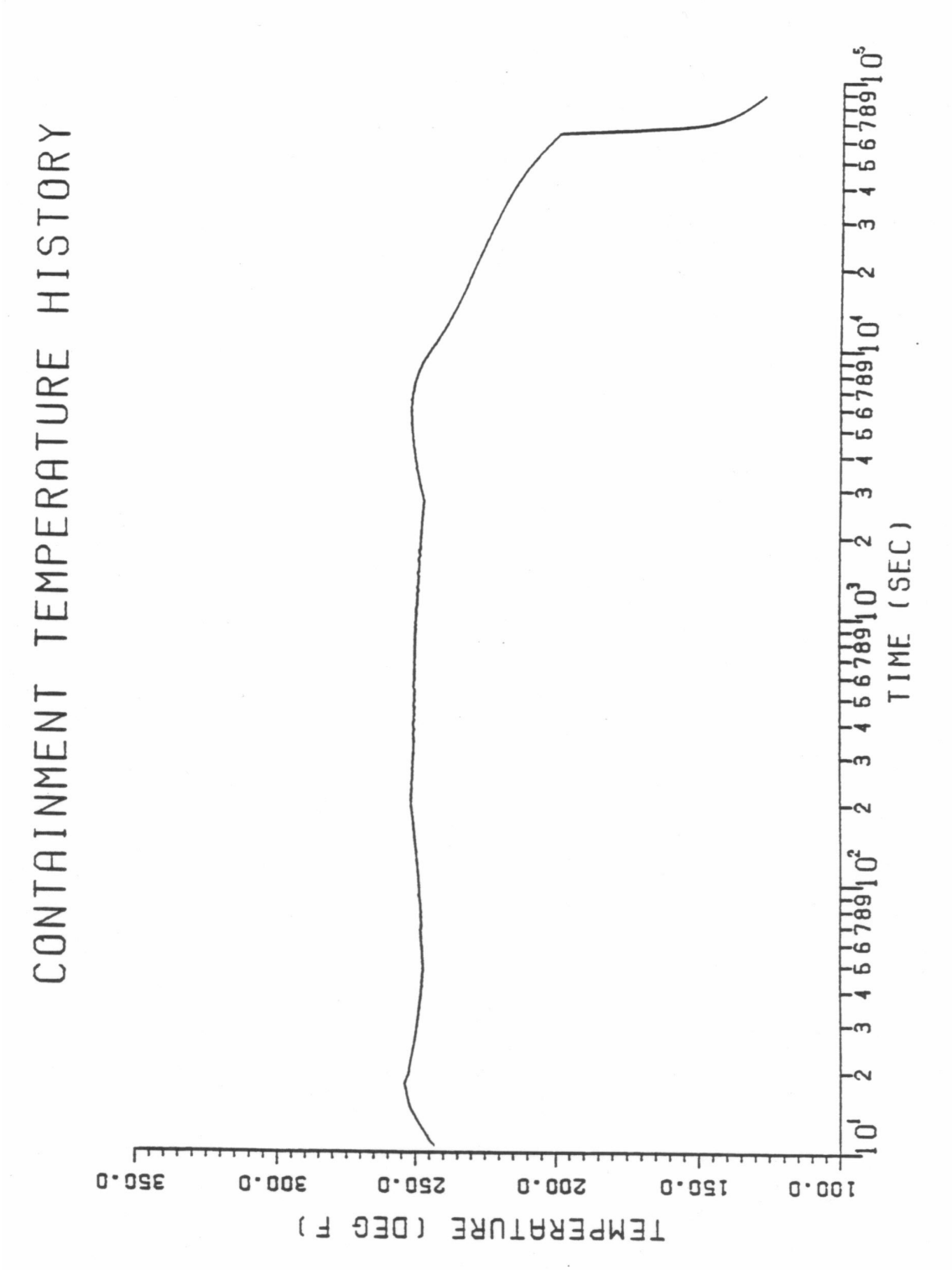

Note: This figure presents results related to the long-term LOCA containment response analysis of record. Section 6.2.1.8 contains a discussion of the results of this analysis of record, as compared with the long-term LOCA containment response results at an analyzed core power level of 3659 MWt.

SEABROOK STATION UPDATED FINAL SAFETY ANALYSIS REPORT	Containment Temperature Response Following DE Cold-Leg Guillotine (Minimum Safety Injection)	
		Figure 6.2-14

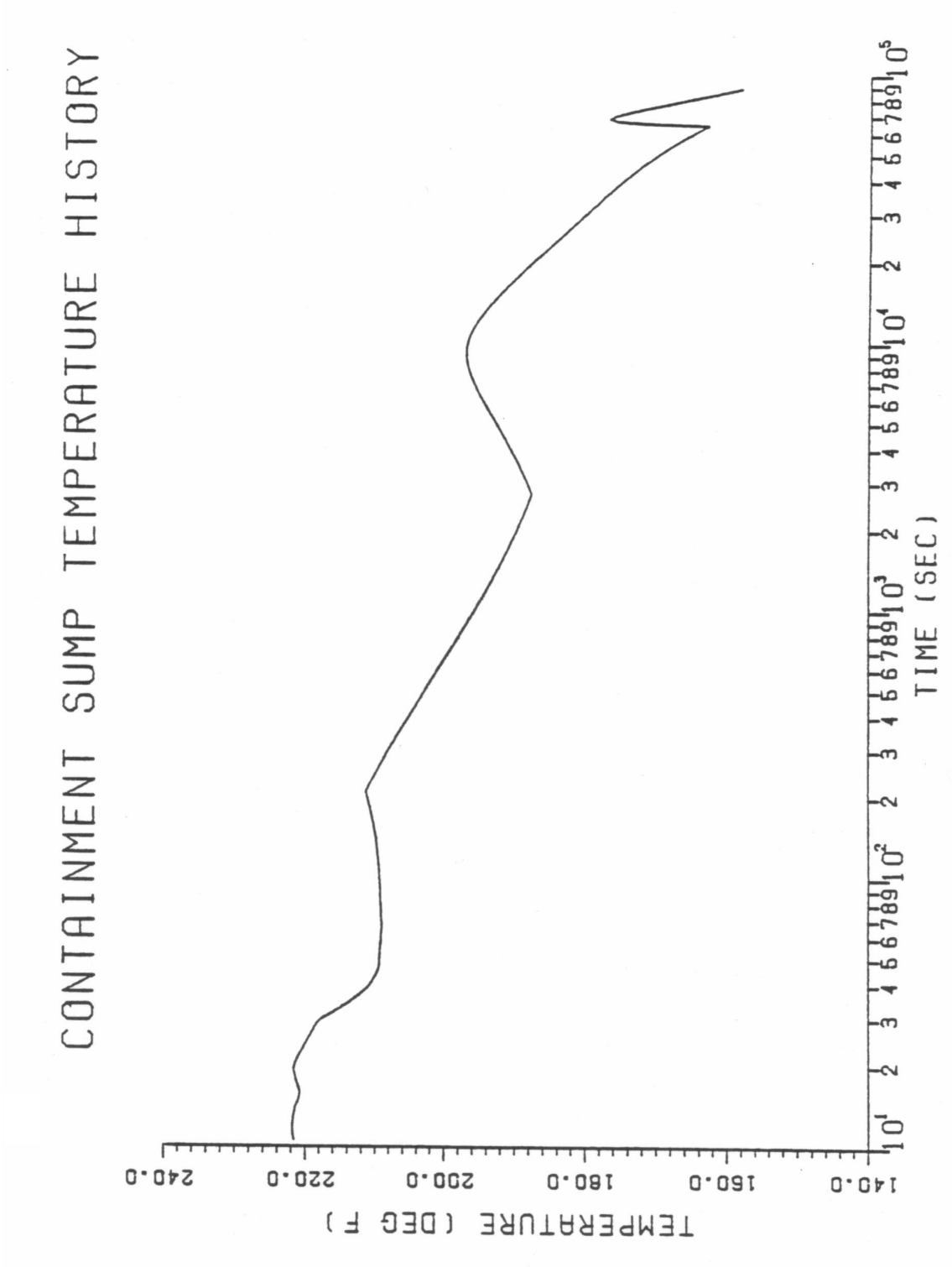

Note: This figure presents results related to the long-term LOCA containment response analysis of record. Section 6.2.1.8 contains a discussion of the results of this analysis of record, as compared with the long-term LOCA containment response results at an analysis core power level of 3659 MWt.

SEABROOK STATION UPDATED FINAL SAFETY ANALYSIS REPORT	Sump Water Temperature Response Following DE Cold-Leg Guillotine (Minimum Safety Injection)	
		Figure 6.2-15

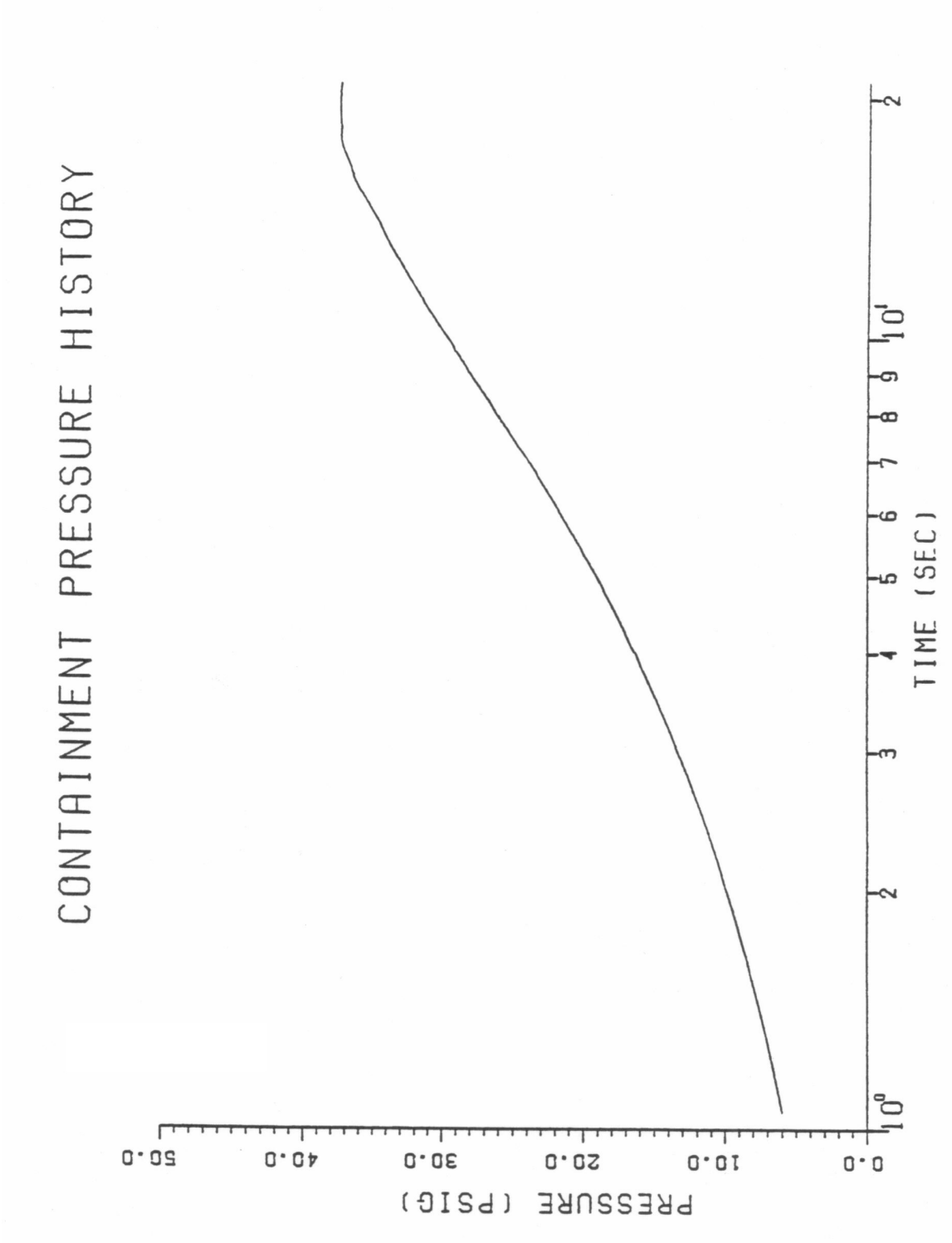

Note: This figure presents results related to the long-term LOCA containment response analysis of record. Section 6.2.1.8 contains a discussion of the results of this analysis of record, as compared with the long-term LOCA containment response results at an analyzed core power level of 3659 MWt.

SEABROOK STATION UPDATED FINAL SAFETY ANALYSIS REPORT	Containment Pressure Response Following DE Hot-Leg Guillotine (Minimum Safety Injection)	
		Figure 6.2-16

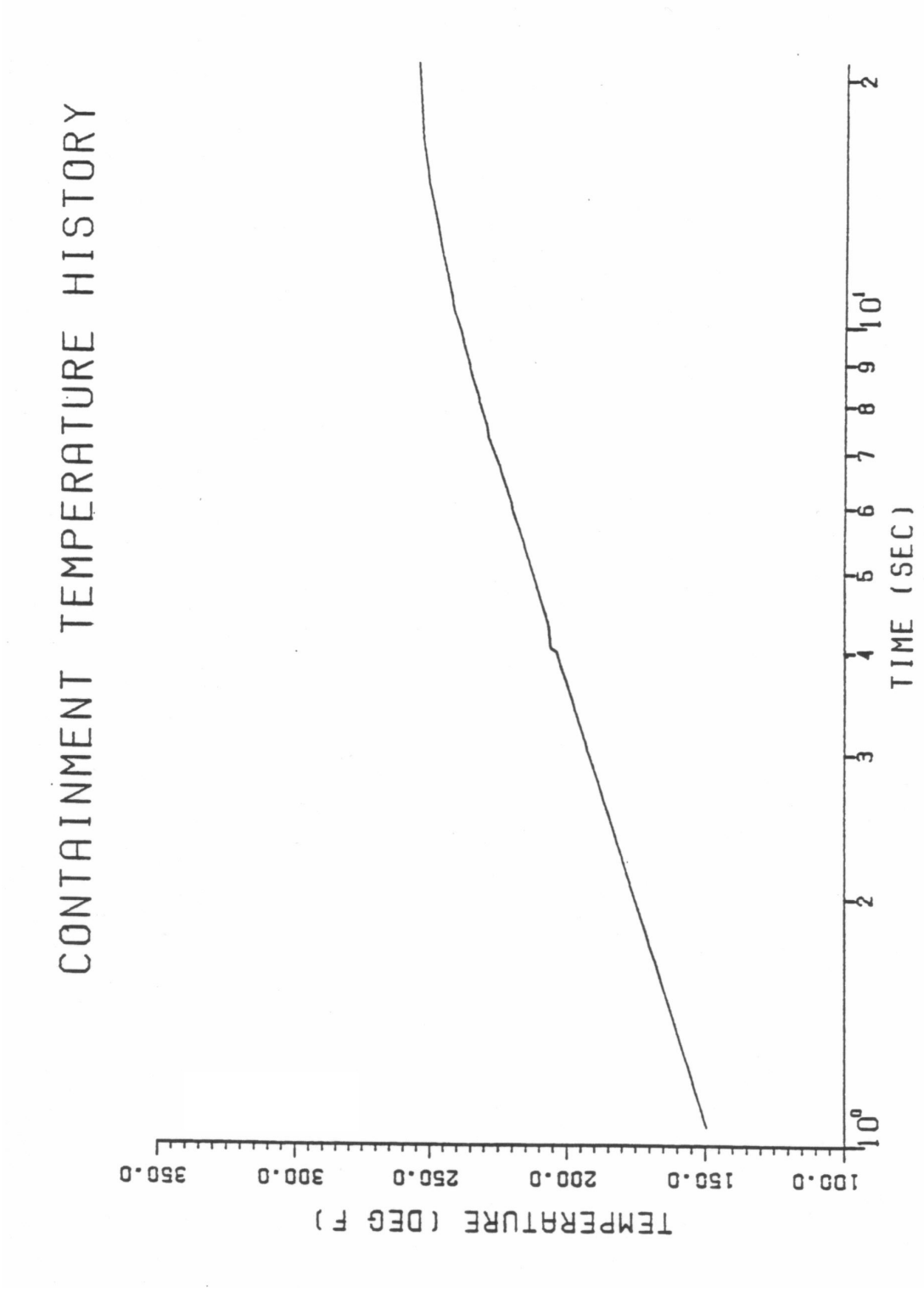

Note: This figure presents results related to the the long-term LOCA containment response analysis of record. Section 6.2.1.8 contains a discussion of the results of this analysis of record, as compared with the long-term LOCA containment response results at an analyzed core power level of 3659 MWt.

SEABROOK STATION UPDATED FINAL SAFETY ANALYSIS REPORT	Containment Temperature Response Following DE Hot-Leg Guillotine (Minimum Safety Injection)	
		Figure 6.2-17

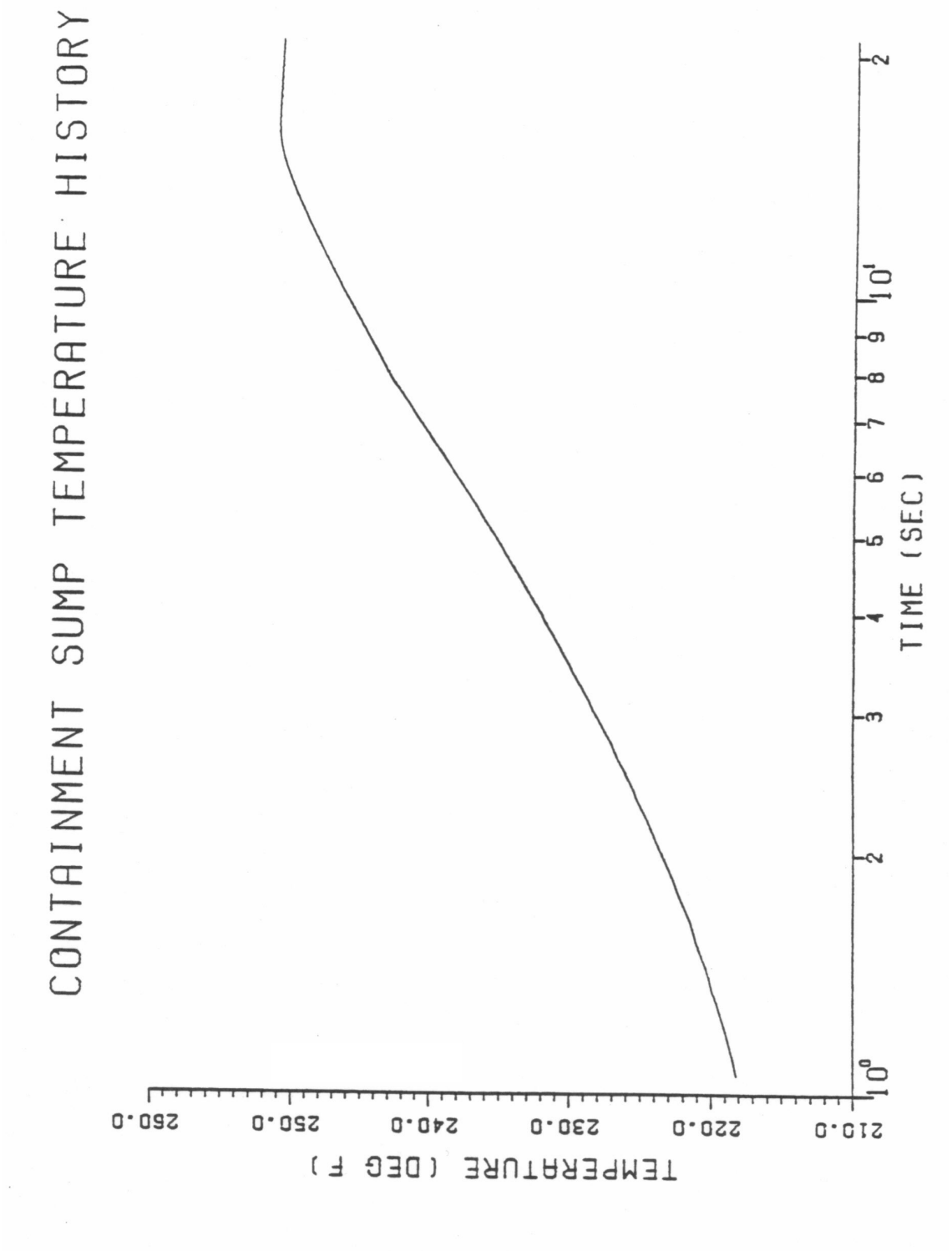

Note: This figure presents results related to the long-term LOCA containment response analysis of record. Section 6.2.1.8 contains a discussion of the results of this analysis of record, as compared with the long-term LOCA containment response results at an analyzed core power level of 3659 MWt.

SEABROOK STATION UPDATED FINAL SAFETY ANALYSIS REPORT	Sump Water Temperature Response Following DE Hot-Leg Guillotine (Minimum Safety Injection)	
		Figure 6.2-18

Note: This figure presents results related to the long-term LOCA containment response analysis of record. Section 6.2.1.8 contains a discussion of the results of this analysis of record, as compared with the long-term LOCA containment response results at an analyzed core power level of 3659 MWt.

SEABROOK STATION UPDATED FINAL SAFETY ANALYSIS REPORT	Condensing Heat Transfer Coefficient Following DE Pump Suction Guillotine with Maximum Injection and Minimum Spray (DBA)	
		Figure 6.2-19

Note: This figure presents results related to the MSLB containment response analysis of record. Section 6.2.1.8 contains a discussion of the results of this analysis of record, as compared with the MSLB containment response results at an analyzed core power level of 3659 MWt.

SEABROOK STATION UPDATED FINAL SAFETY ANALYSIS REPORT	Containment Response Following Full DE Main Steam Line Break at Hot Shutdown with One Spray Train Failure	
		Figure 6.2-20

Note: This figure presents results related to the MSLB containment response analysis of record. Section 6.2.1.8 contains a discussion of the results of this analysis of record, as compared with the MSLB containment response results at an analyzed core power level of 3659 MWt.

SEABROOK STATION UPDATED FINAL SAFETY ANALYSIS REPORT	Containment Temperature Response Following Full DE Main Steam Line Break at Hot Shutdown with One Spray Train Failure	
		Figure 6.2-21

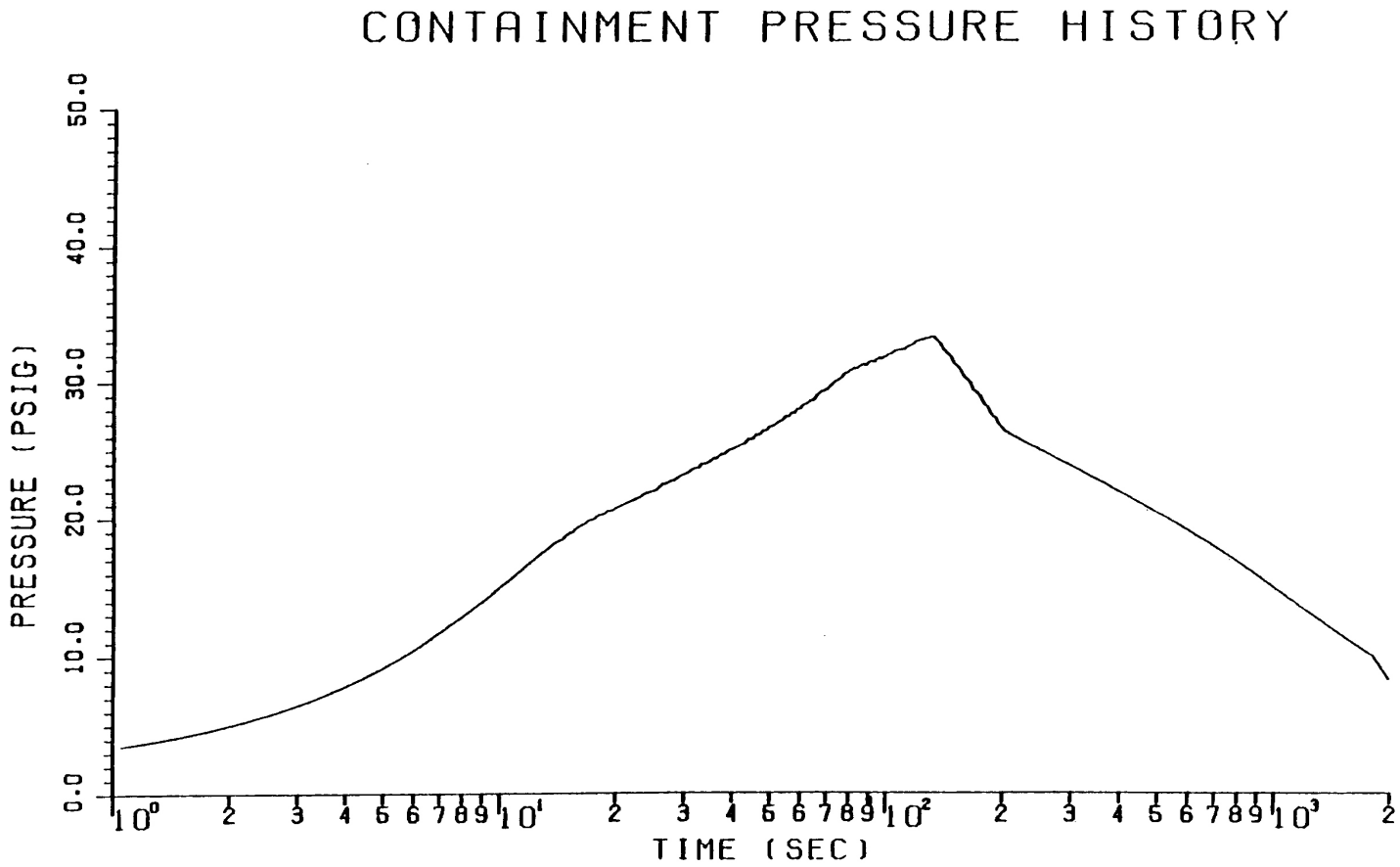

Note: This figure presents results related to the MSLB containment response analysis of record. Section 6.2.1.8 contains a discussion of the results of this analysis of record, as compared with the MSLB containment response results at an analyzed core power level of 3659 MWt.

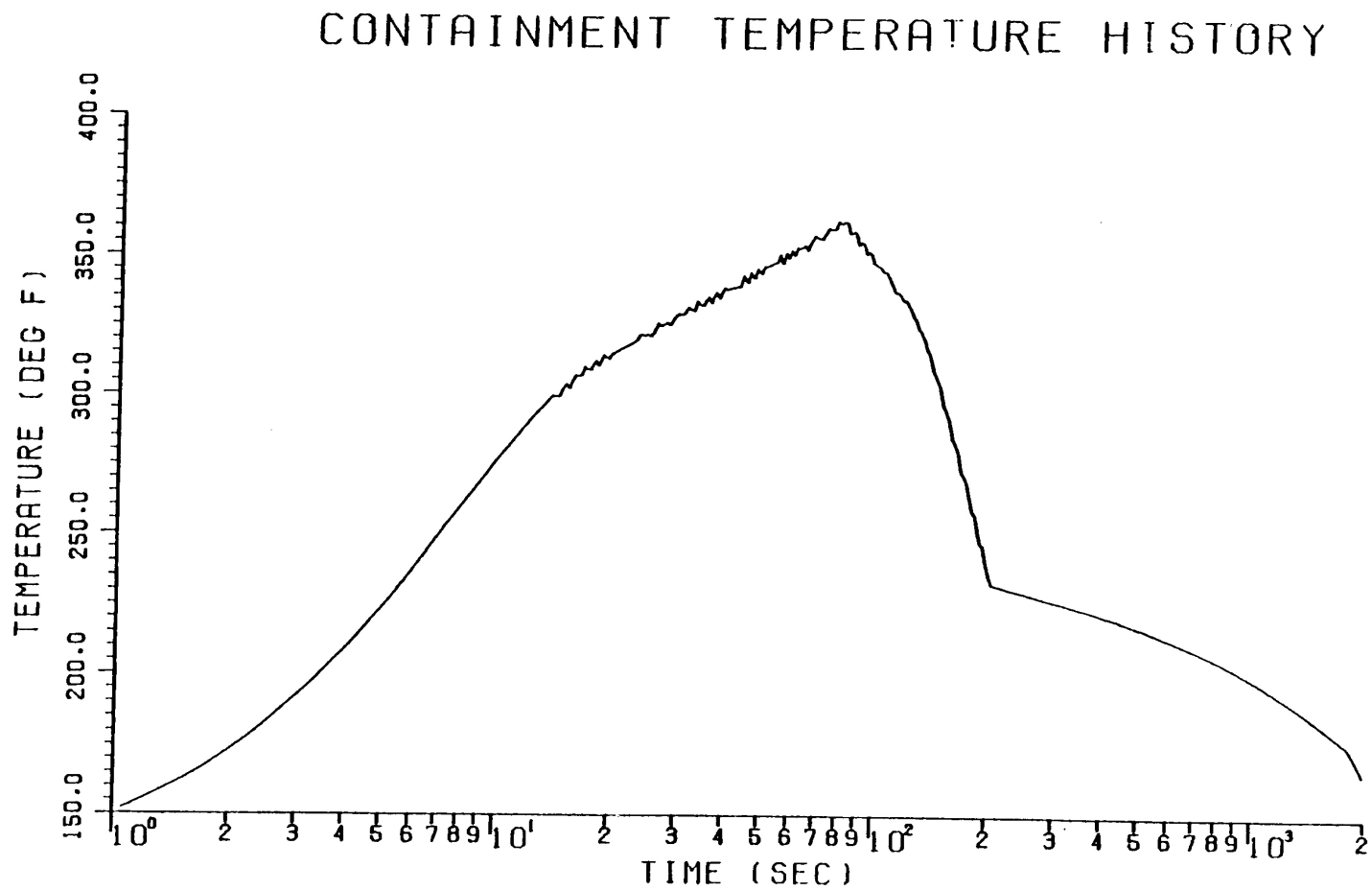

Note: This figure presents results related to the MSLB containment response analysis of record. Section 6.2.1.8 contains a discussion of the results of this analysis of record, as compared with the MSLB containment response results at an analyzed core power level of 3659 MWt.

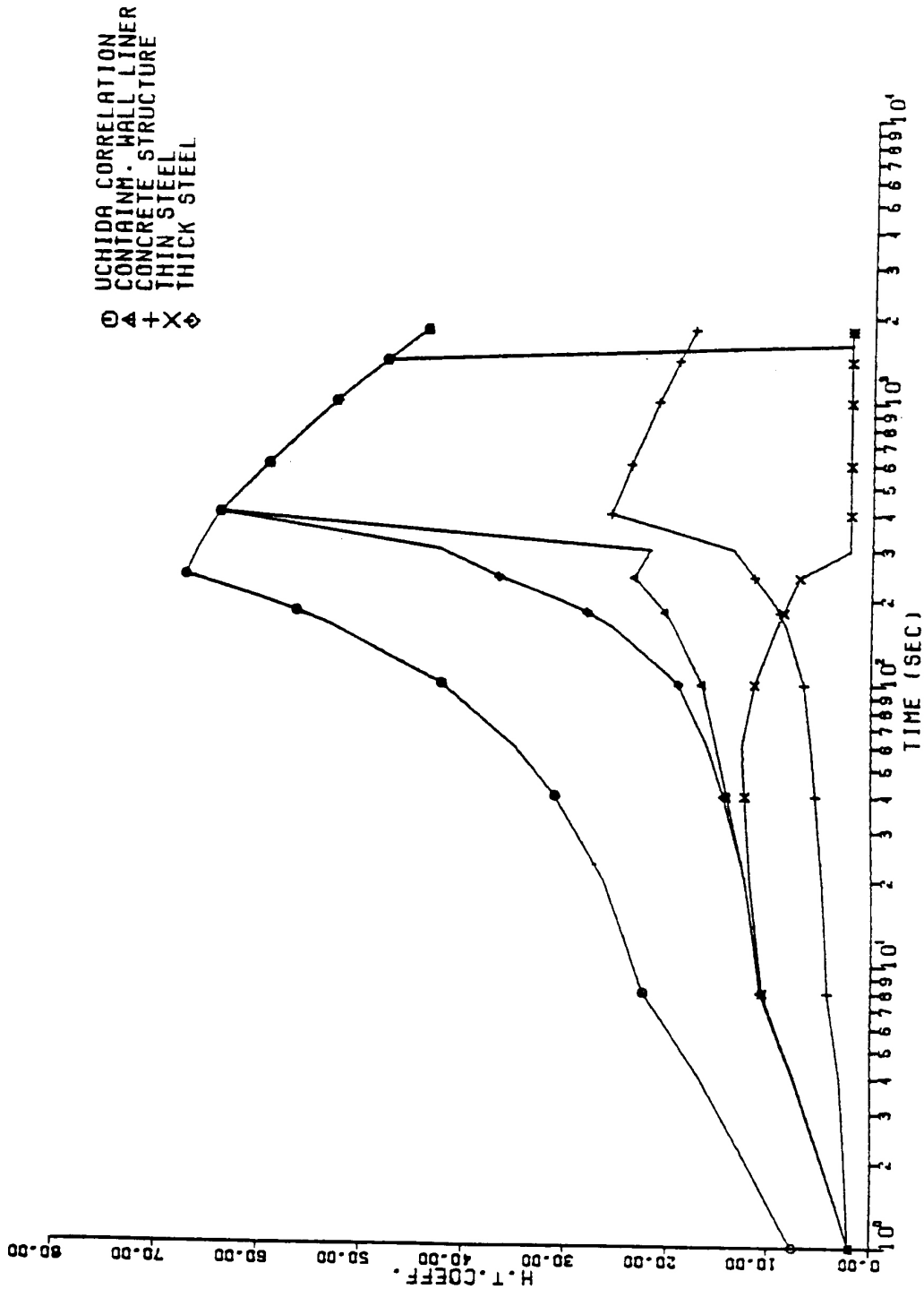

SEABROOK STATION UPDATED FINAL SAFETY ANALYSIS REPORT	Effective Heat Transfer Coefficients for Passive Heat Sinks - Full DE Main Steam Line Break at Hot Shutdown with One Spray Train Failed	
		Figure 6.2-24

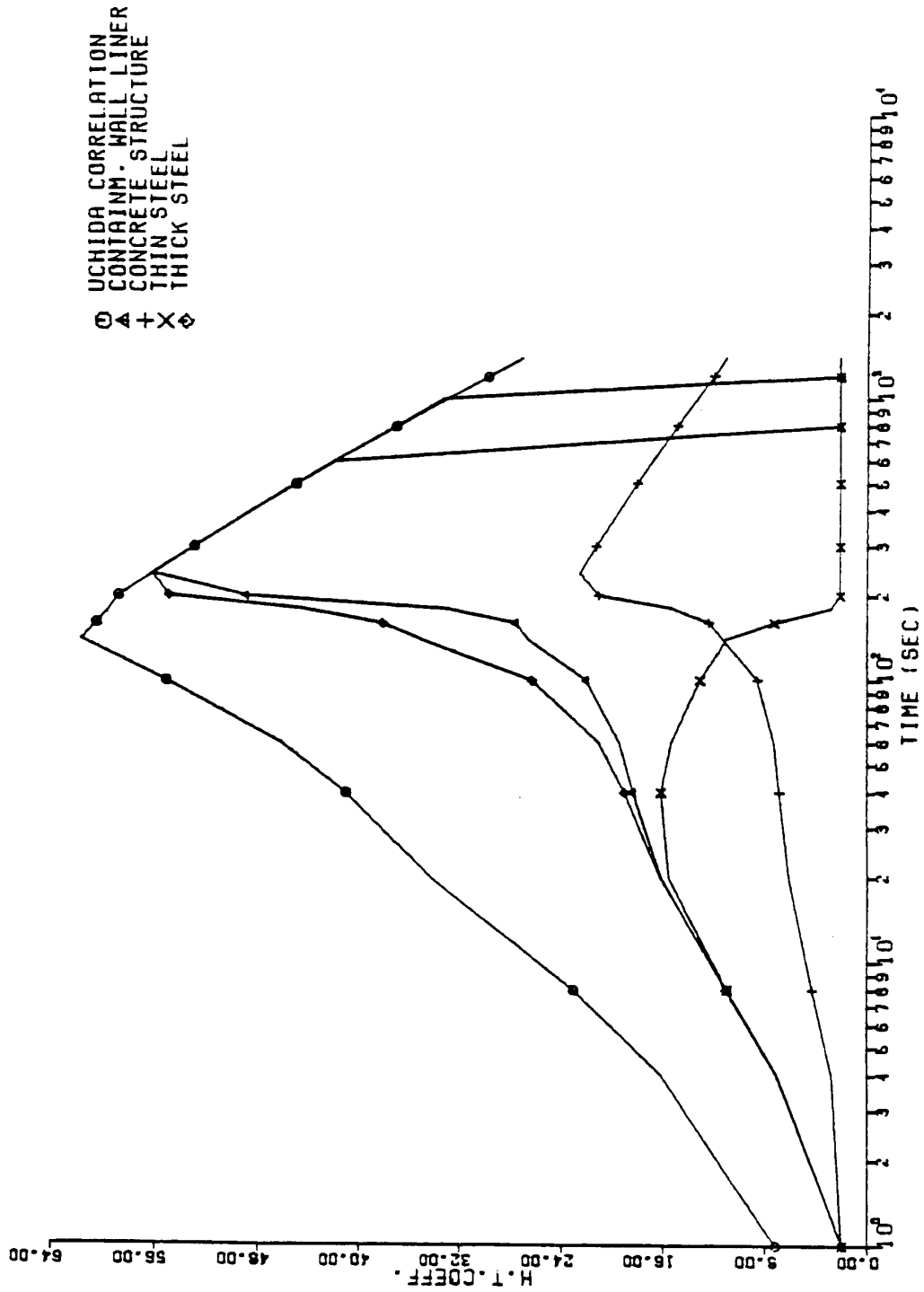

SEABROOK STATION UPDATED FINAL SAFETY ANALYSIS REPORT	Effective Heat Transfer Coefficients for Passive Heat Sinks for Full DE Main Steam Line Break at 102% Power with Broken-Loop MSIV Failed	
		Figure 6.2-25

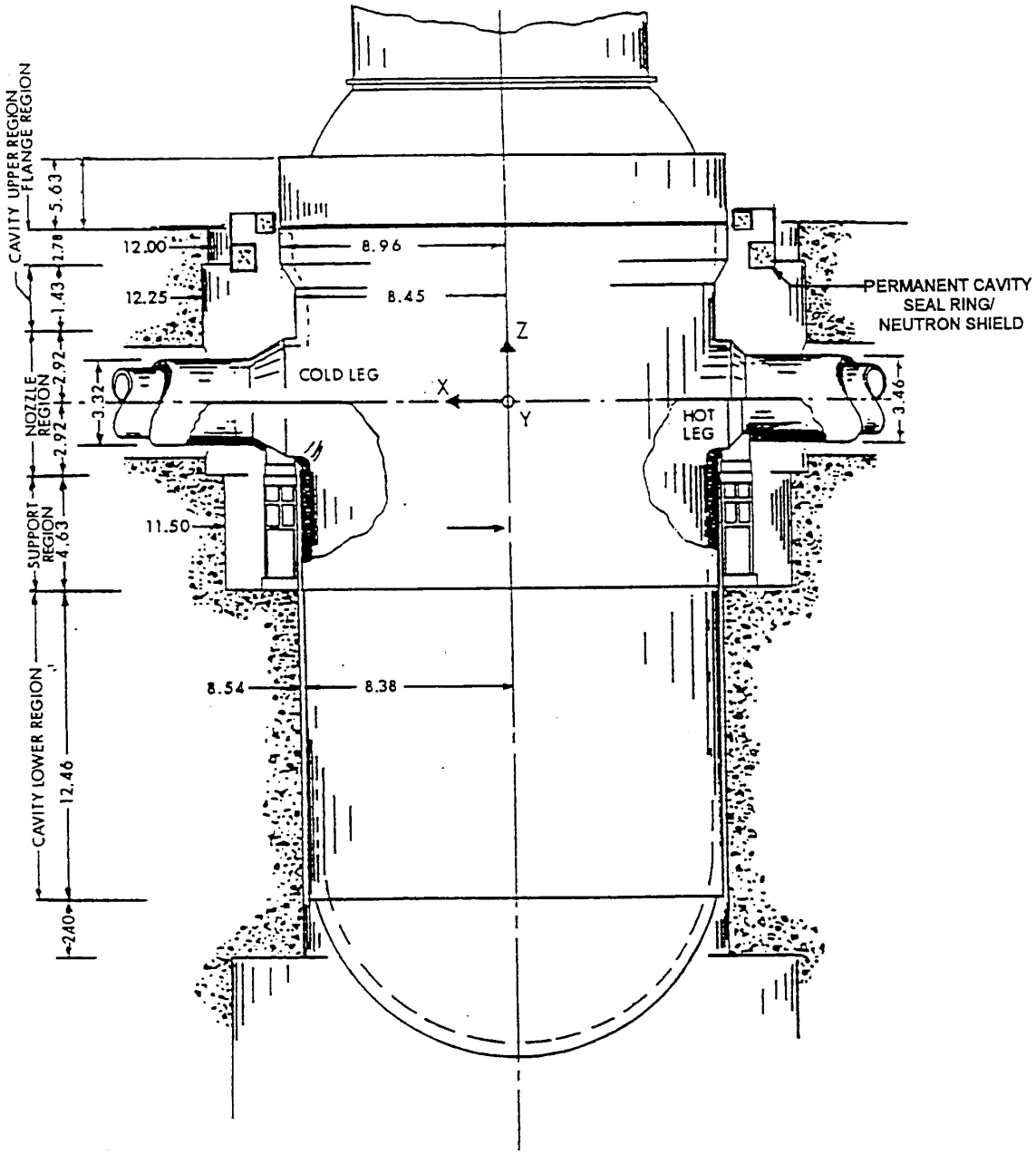

SEABROOK STATION UPDATED FINAL SAFETY ANALYSIS REPORT	Vertical Section through Reactor Cavity	
		Figure 6.2-26

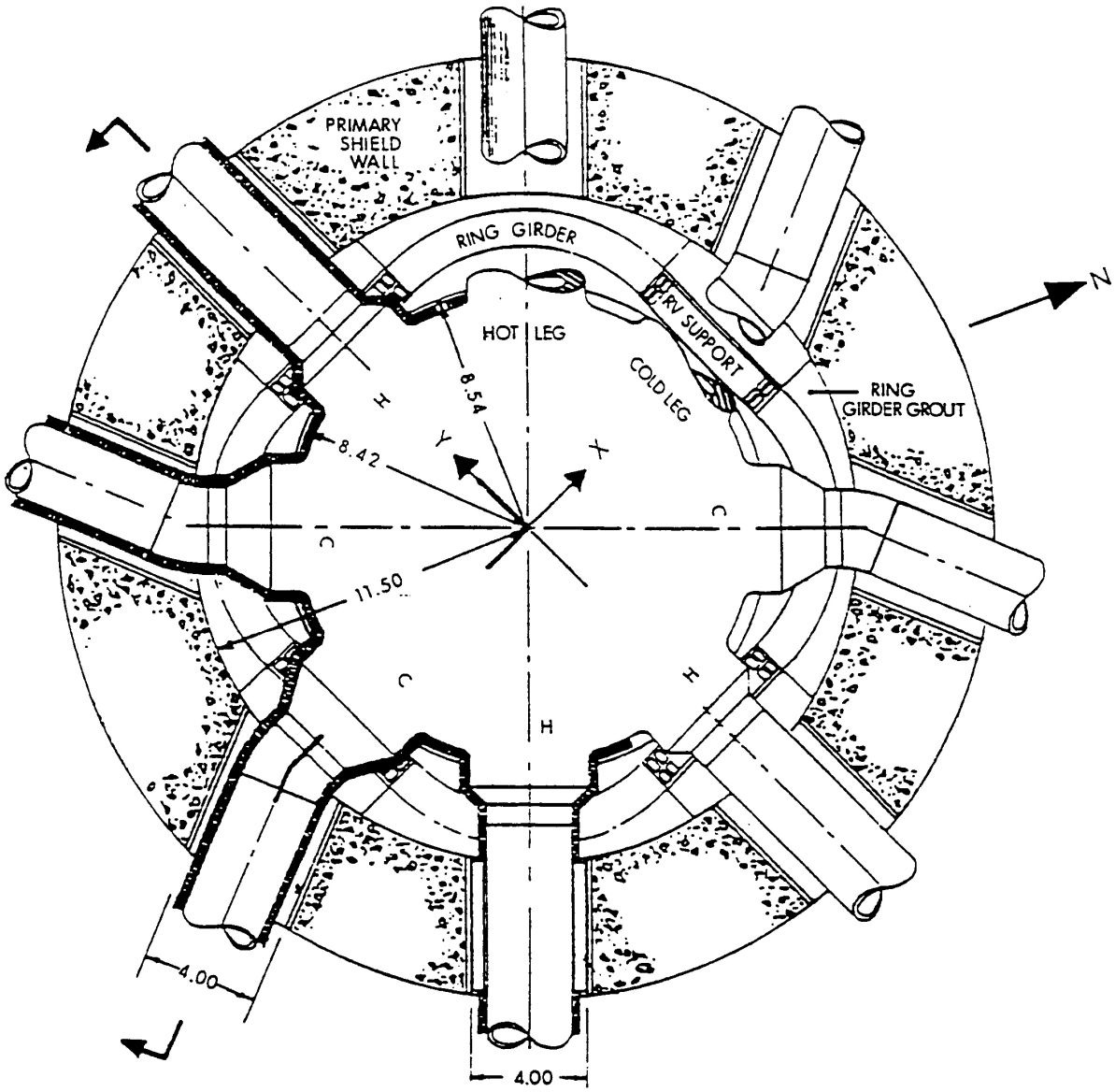

SEABROOK STATION UPDATED FINAL SAFETY ANALYSIS REPORT	Plan View of Reactor Cavity at Elevation of Nozzles	
		Figure 6.2-27

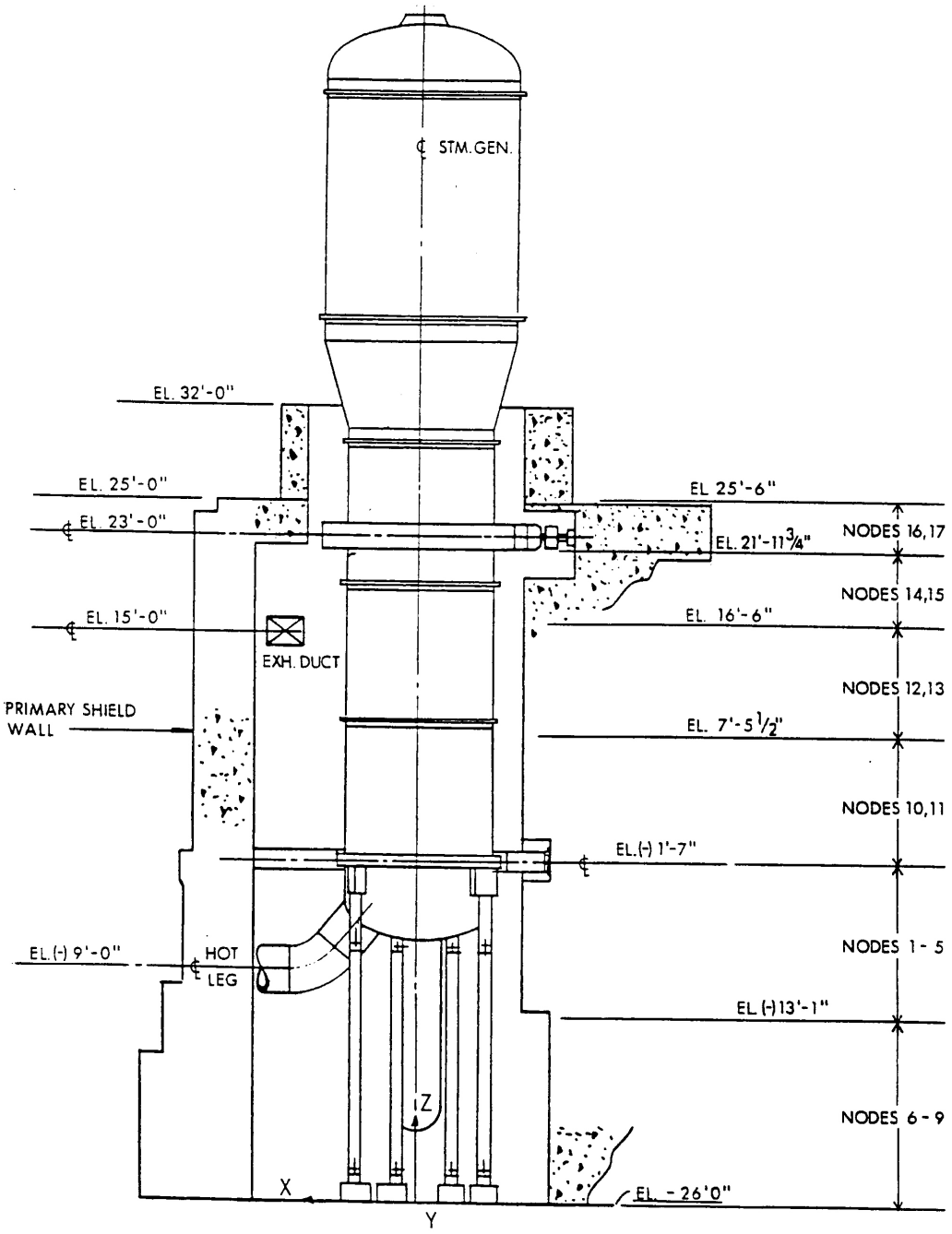

SEABROOK STATION UPDATED FINAL SAFETY ANALYSIS REPORT	Section Drawing of Steam Generator Compartment Parallel to Hot Leg	
		Figure 6.2-29

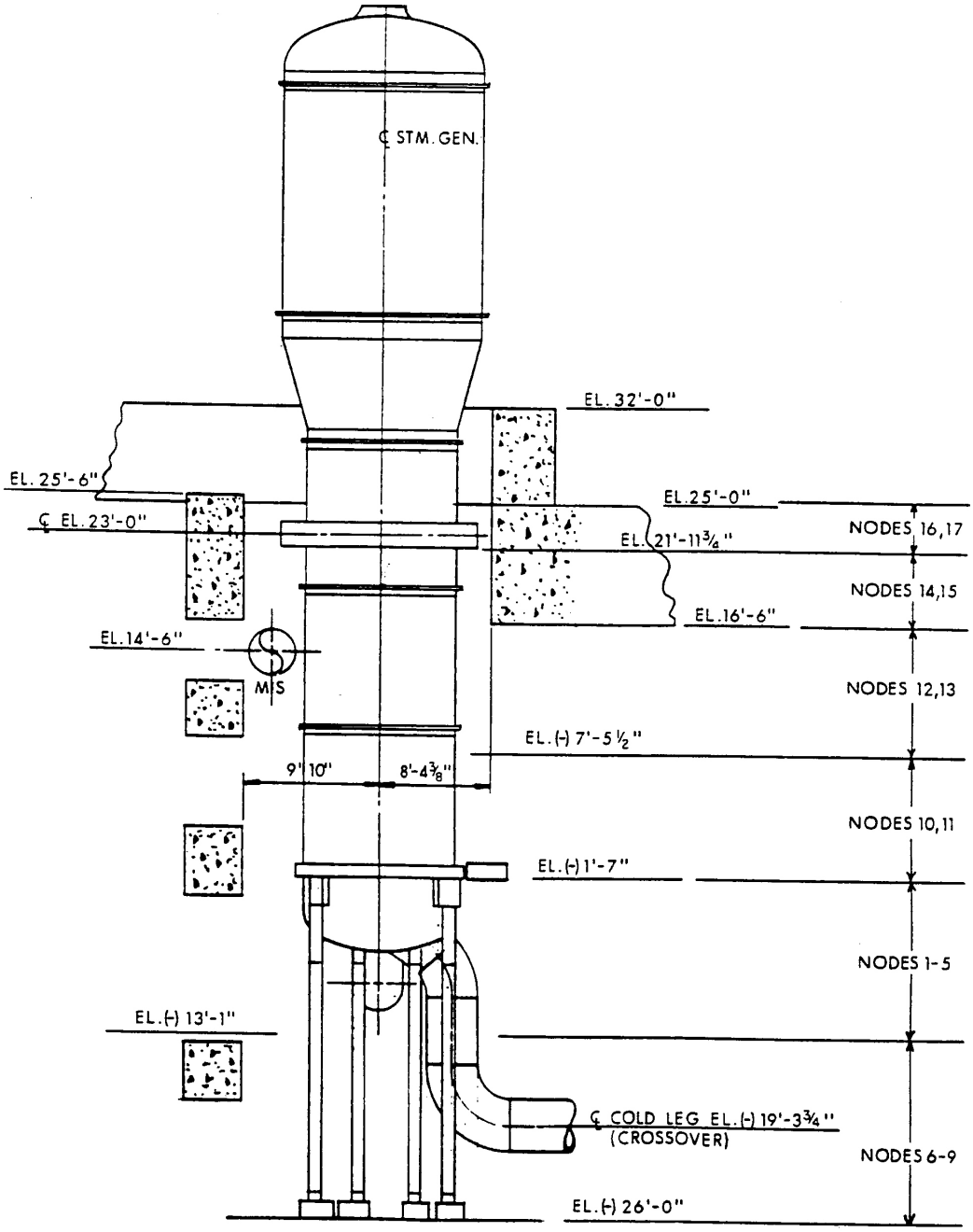

SEABROOK STATION UPDATED FINAL SAFETY ANALYSIS REPORT	Section Drawing of Steam Generator Compartment Parallel to Cold Leg	
		Figure 6.2-30

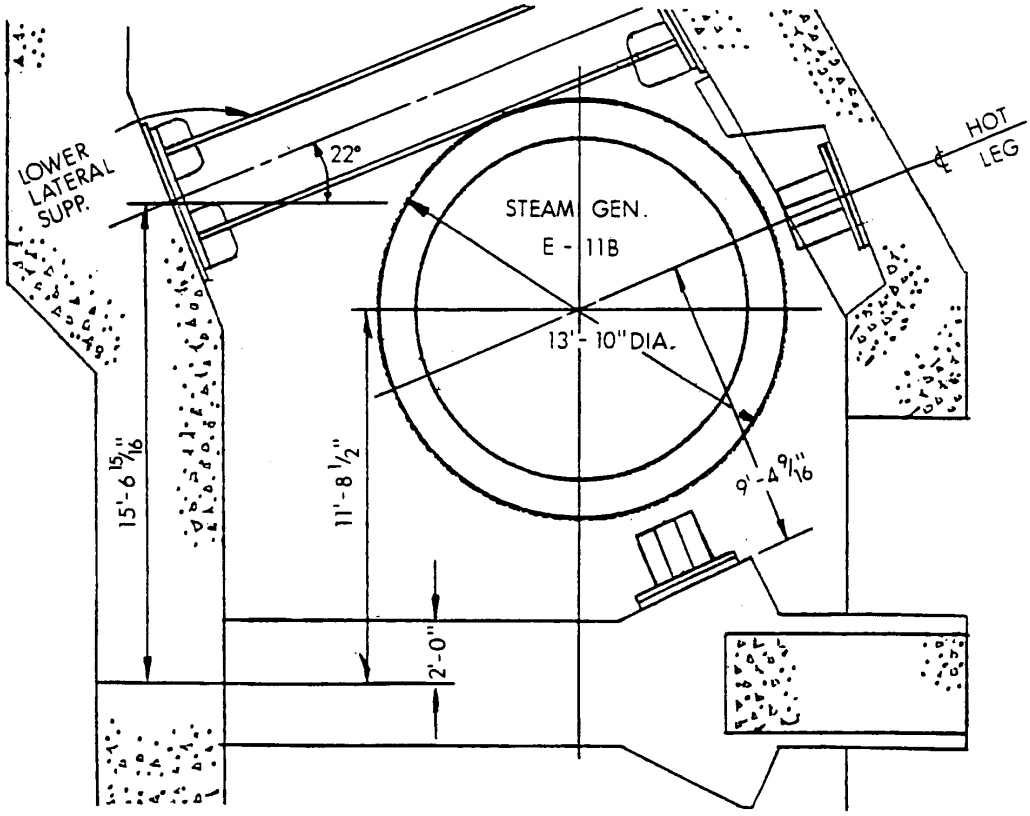

SEABROOK STATION UPDATED FINAL SAFETY ANALYSIS REPORT	Plan Drawing of Steam Generator Compartment at Elevation (-)1'-7"	
		Figure 6.2-31

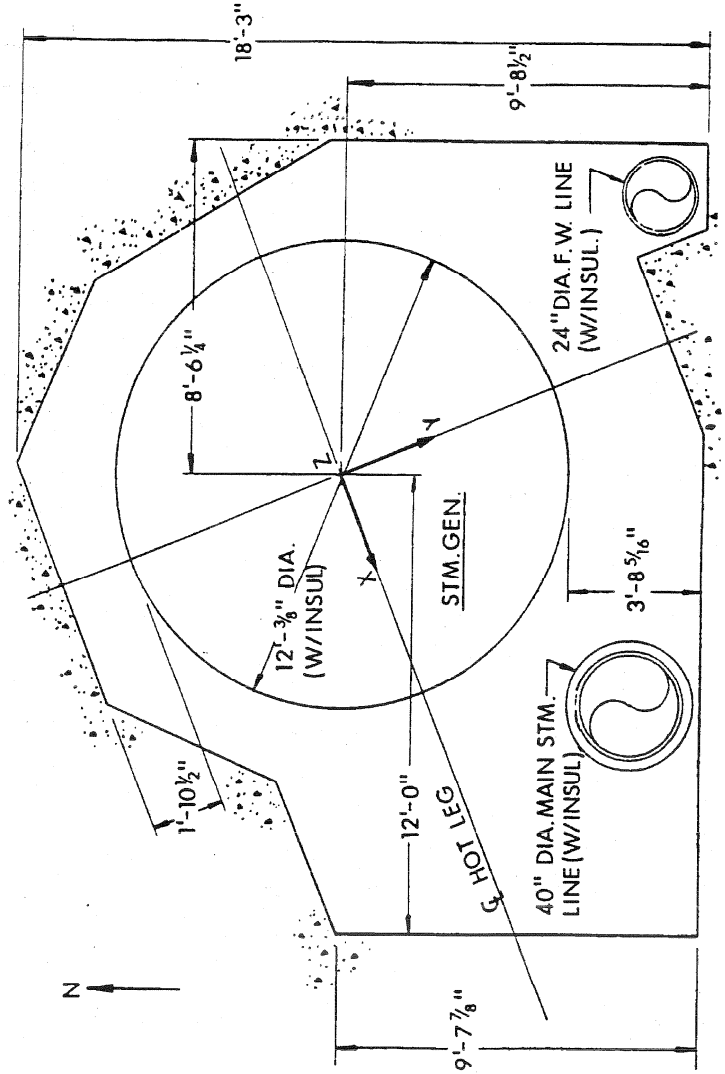

SEABROOK STATION UPDATED FINAL SAFETY ANALYSIS REPORT	Plan Drawing of Steam Generator Compartment at Elevation 16'-6"	
		Figure 6.2-32

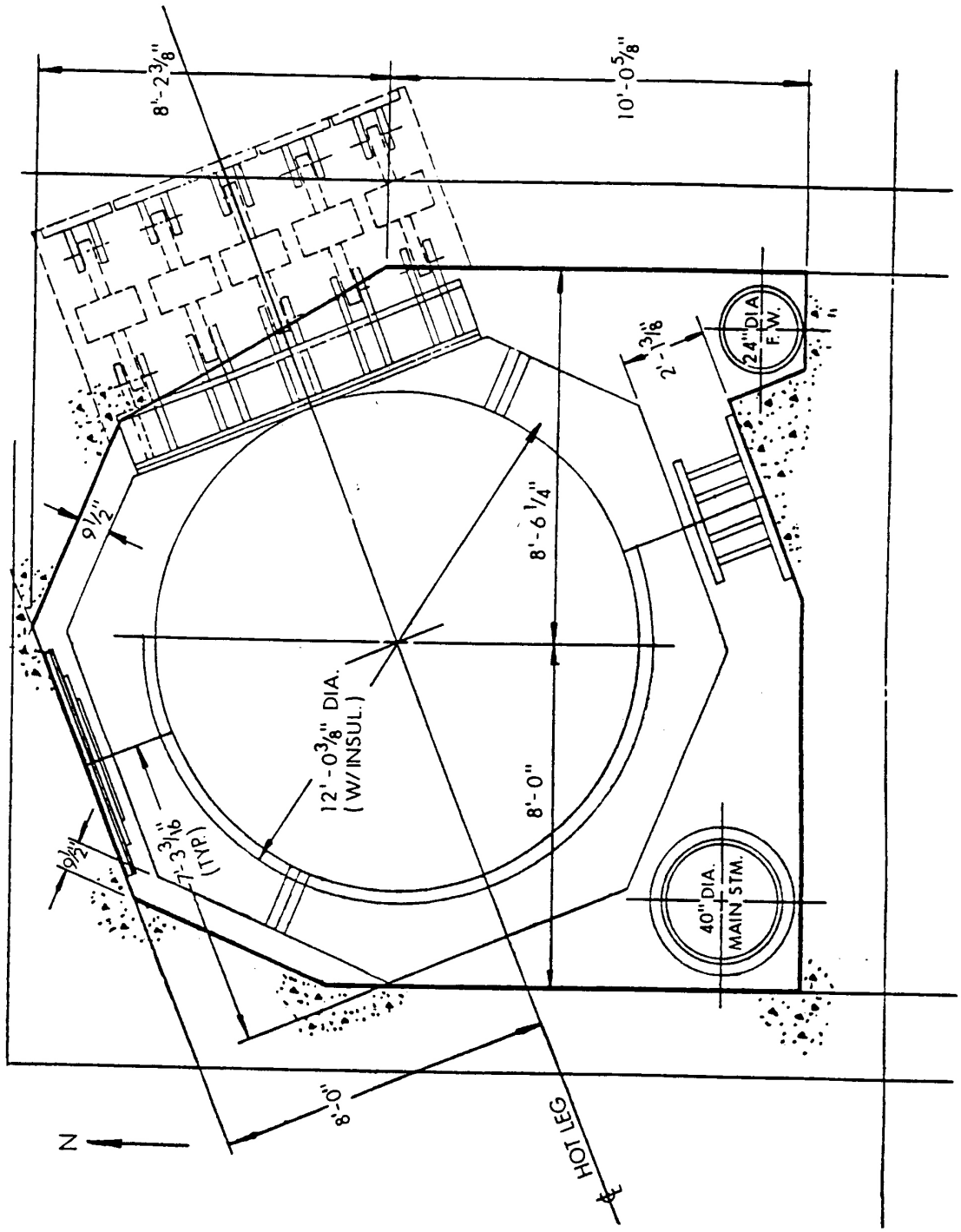

SEABROOK STATION UPDATED FINAL SAFETY ANALYSIS REPORT	Plan Drawing of Steam Generator Compartment at Elevation 22'-0"	
		Figure 6.2-33

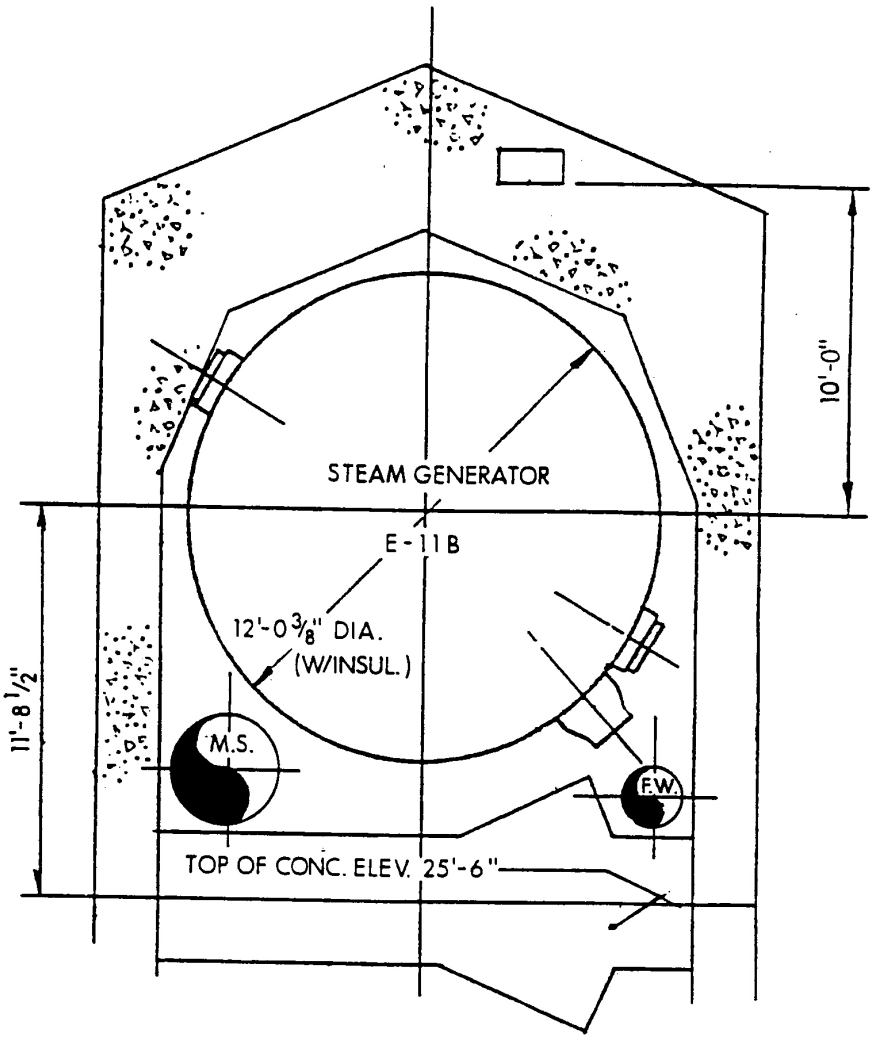

SEABROOK STATION UPDATED FINAL SAFETY ANALYSIS REPORT	Plan Drawing of Steam Generator Compartment at Elevation 25'-6"	
		Figure 6.2-34

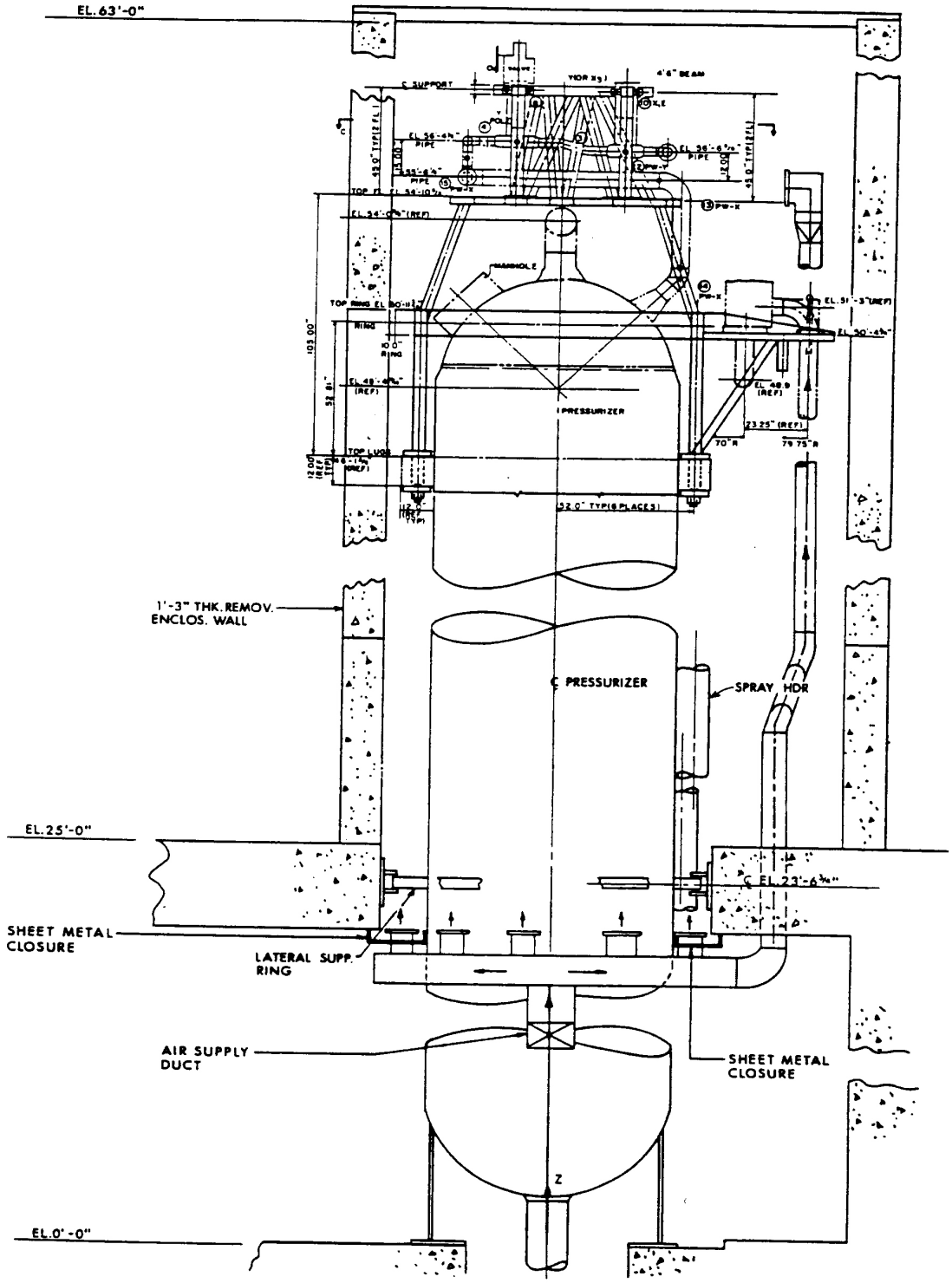

SEABROOK STATION UPDATED FINAL SAFETY ANALYSIS REPORT	Section Drawing of Pressurizer Compartment	
		Figure 6.2-35

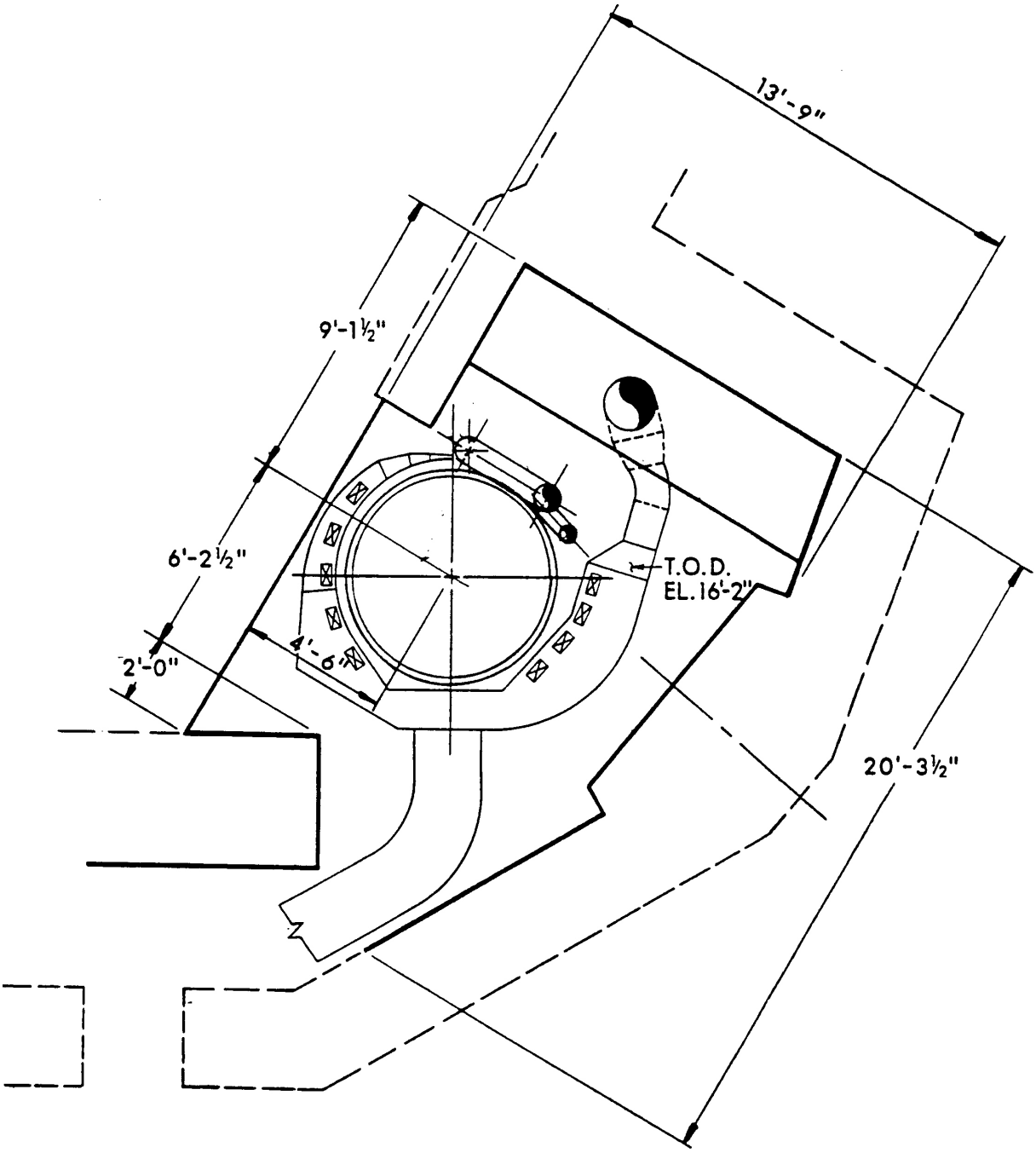

SEABROOK STATION UPDATED FINAL SAFETY ANALYSIS REPORT	Plan Drawing of Pressurizer Compartment from Elevation 16'-6" to Elevation 0'-0"	
		Figure 6.2-36

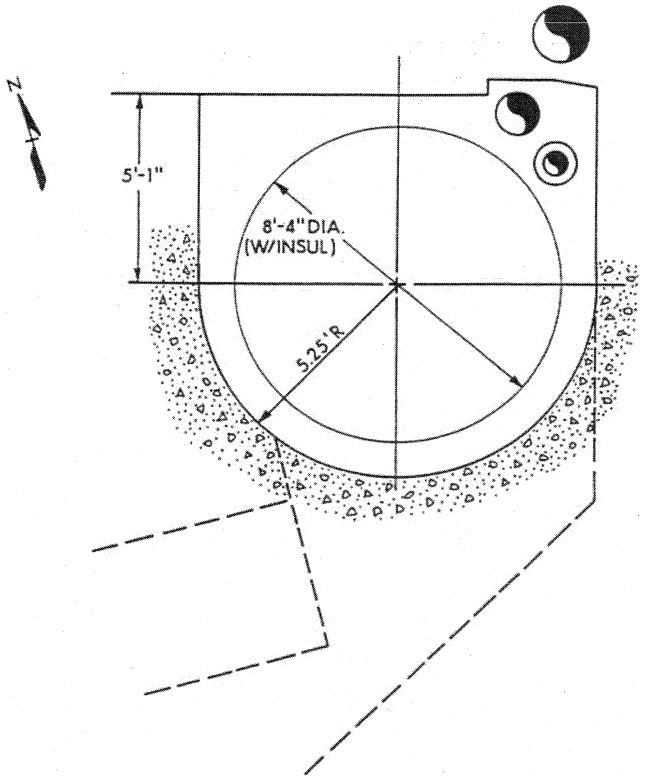

SEABROOK STATION UPDATED FINAL SAFETY ANALYSIS REPORT	Plan Drawing of Pressurizer Compartment from Elevation 22'-0" to Elevation 16'-0"	
		Figure 6.2-37

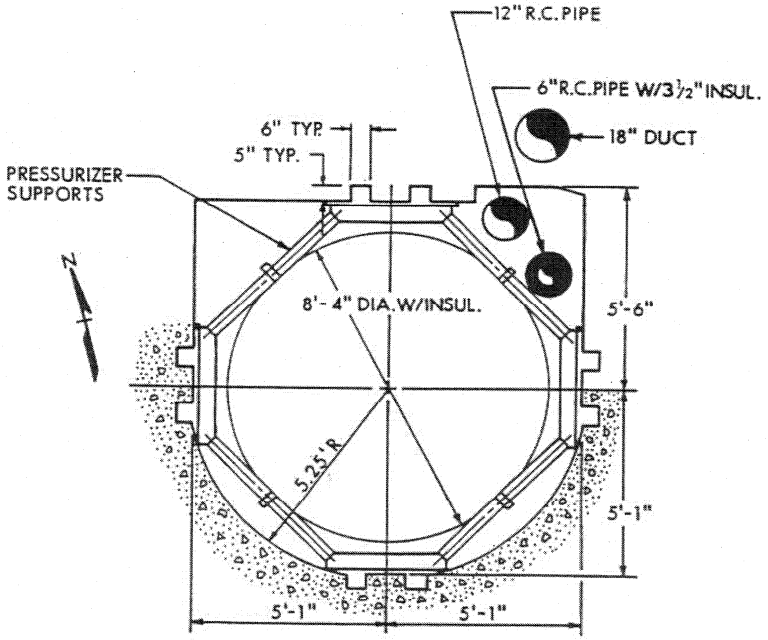

SEABROOK STATION UPDATED FINAL SAFETY ANALYSIS REPORT	Plan Drawing of Pressurizer Compartment from Elevation 25'-0" to Elevation 22'-0"	
		Figure 6.2-38

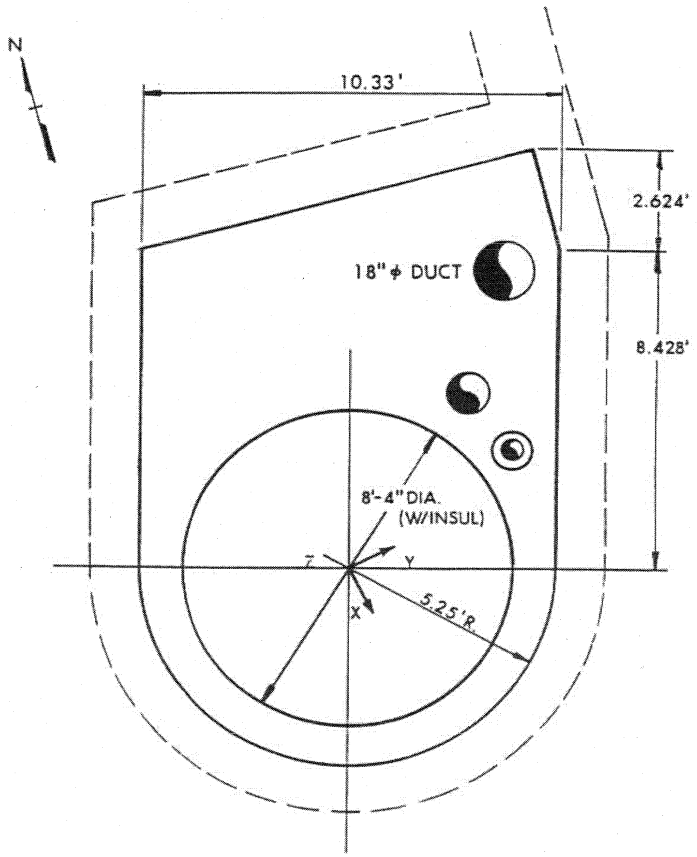

SEABROOK STATION UPDATED FINAL SAFETY ANALYSIS REPORT	Plan Drawing of Pressurizer Compartment from Elevation 45'-0" to Elevation 25'-0"	
		Figure 6.2-39

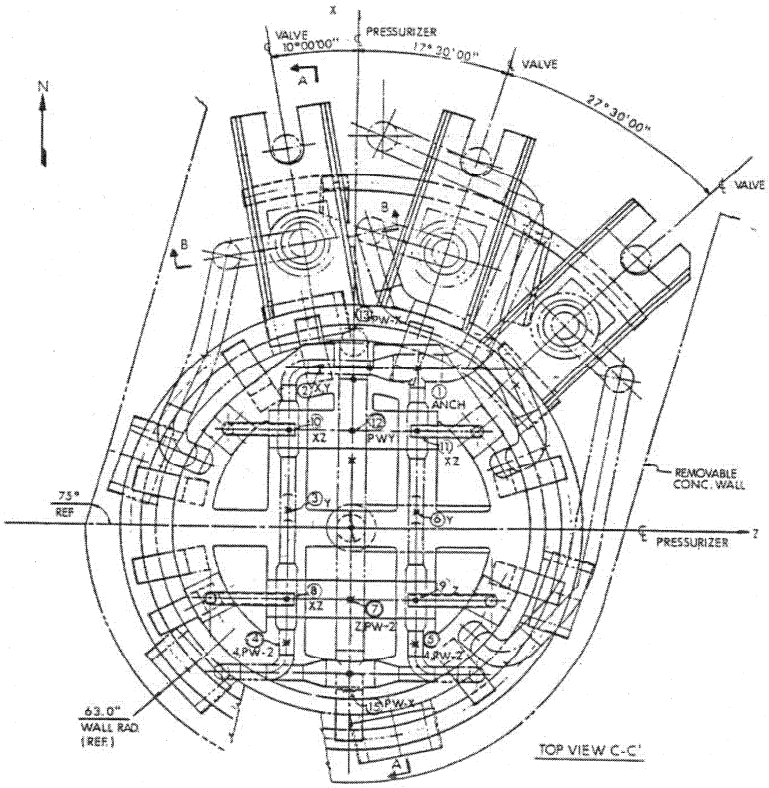

SEABROOK STATION UPDATED FINAL SAFETY ANALYSIS REPORT	Plan Drawing of Pressurizer Compartment at Elevation 57'-0"	
		Figure 6.2-40

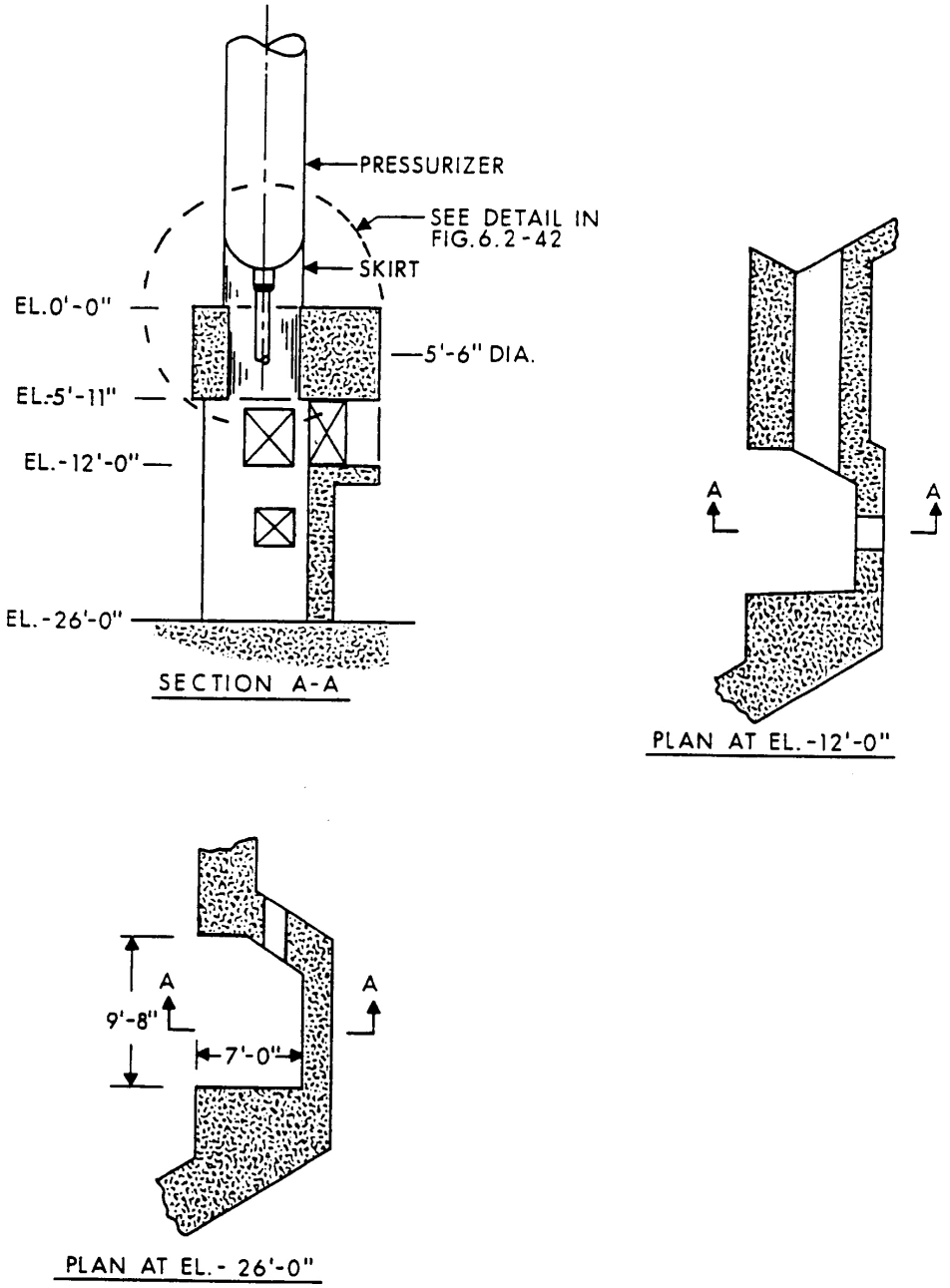

SEABROOK STATION UPDATED FINAL SAFETY ANALYSIS REPORT	Plan and Elevation Drawings of Pressurizer Skirt Cavity	
		Figure 6.2-41

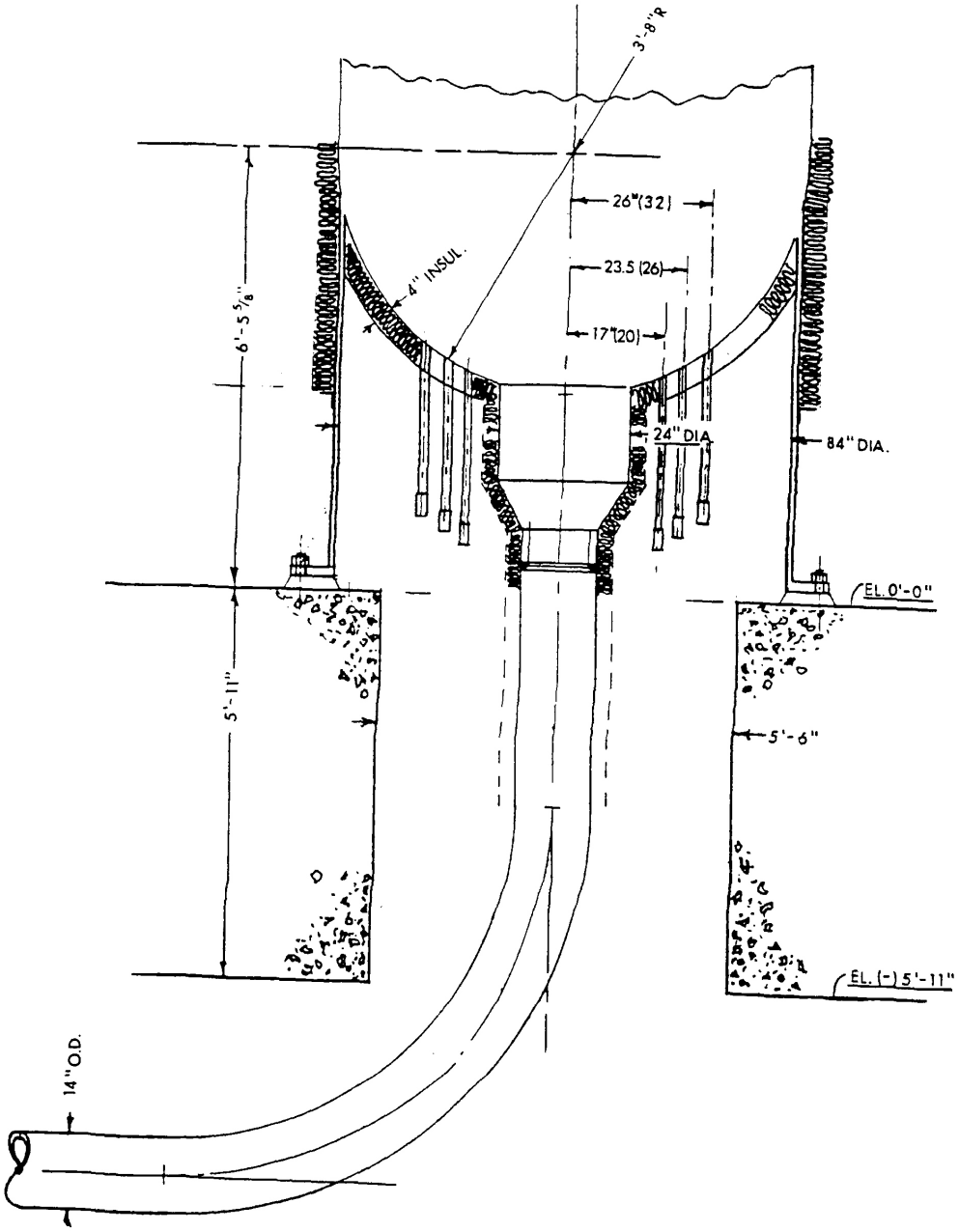

SEABROOK STATION UPDATED FINAL SAFETY ANALYSIS REPORT	Elevation Drawing of Pressurizer Skirt Cavity	
		Figure 6.2-42

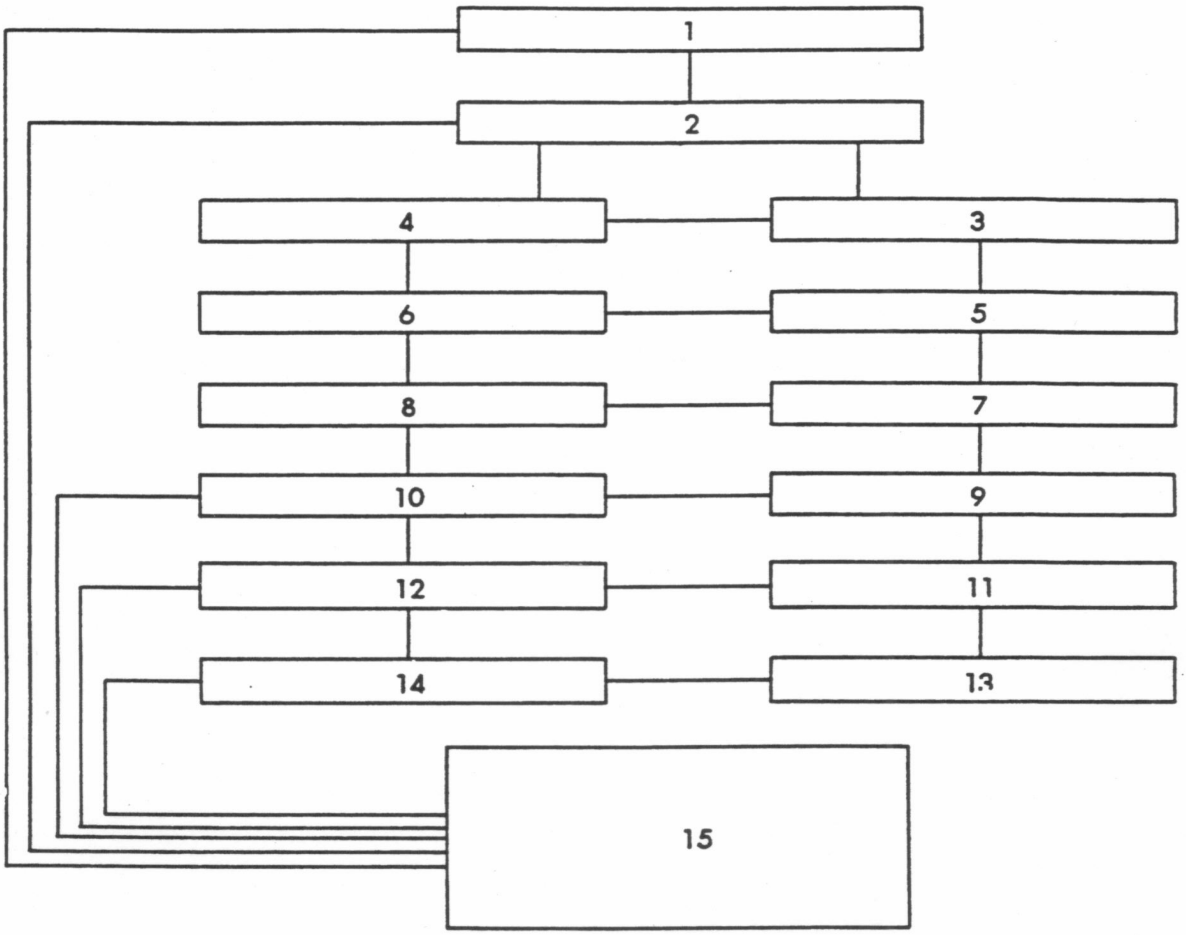

COMPARTMENT	DESCRIPTION
1	From EL 56'- 6 11/16" to EL 63'-0"
2	From EL 50'-1 7/16" to EL 56'-6 11/16"
3 - 4	From EL 37'-6 3/4" to EL 50'-1 7/16"
5 - 6	From EL 25'-0" to EL 37'-6 3/4"
7 - 8	From EL 22'-0" to EL 25'-0"
9 - 10	From EL 16'-6" to EL 22'-0"
11 - 12	From EL 8'-3" to EL 16'-6"
13 - 14	From EL 0'-0" to EL 8'-3"
15	Containment

Break occurs in Node 5

SEABROOK STATION UPDATED FINAL SAFETY ANALYSIS REPORT	Pressurizer Compartment Nodalization (15 Node, 23 Node, 29 Node) [3 Sheets]	
		Figure 6.2-54 Sh. 1 of 3

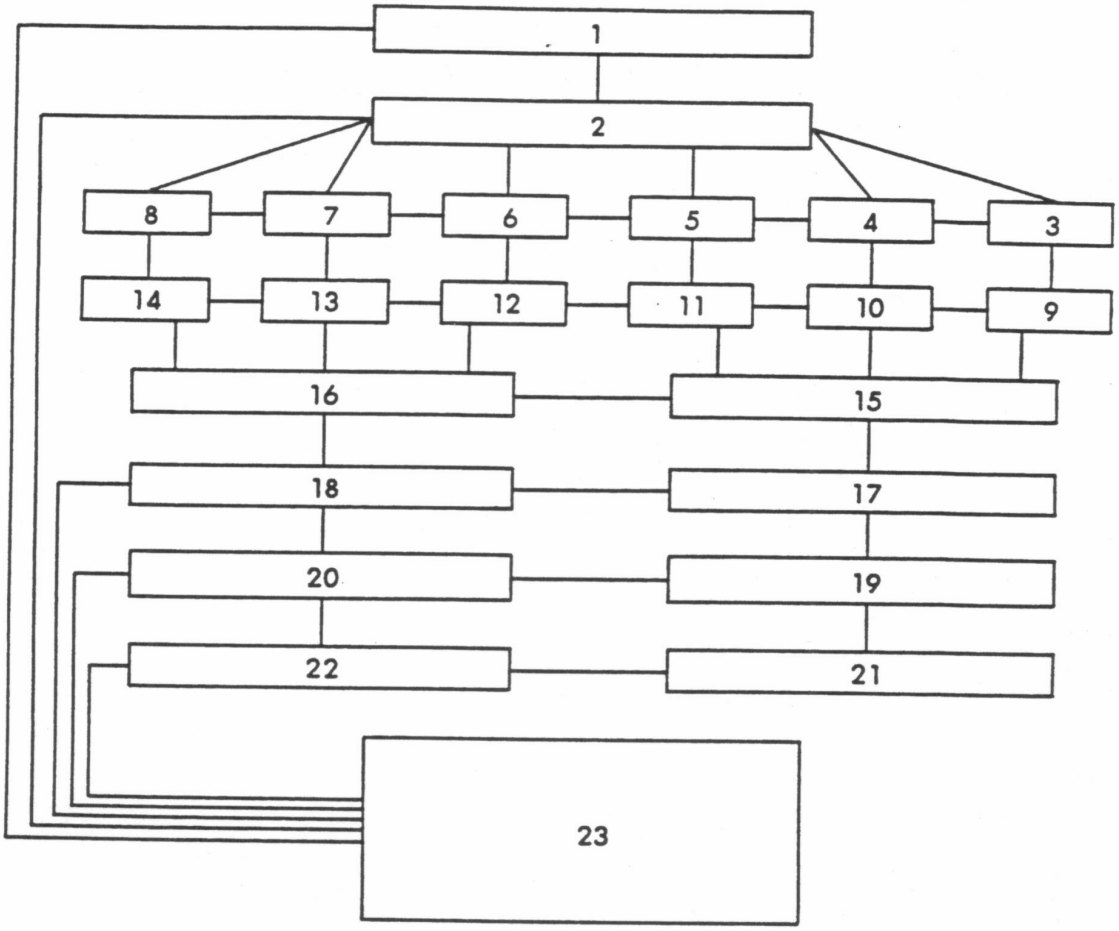

COMPARTMENT	DESCRIPTION
1	From EL 56'-6 11/16" to EL 63'-0"
2	From EL 50'-1 7/16" to EL 56'-6 11/16"
3 - 8	From EL 37'-6 3/4" to EL 50'-1 7/16"
9 - 14	From EL 25'-0" to EL 37'- 6 3/4"
15 - 16	From EL 22'-0" to EL 25'-0"
17 - 18	From EL 16'-6" to EL 22'-0"
19 - 20	From EL 8'-3" to EL 16'-6"
21 - 22	From 0'-0" to EL 8'-3"
23	Containment

Break occurs in Node 9

SEABROOK STATION UPDATED FINAL SAFETY ANALYSIS REPORT	Pressurizer Compartment Nodalization (15 Node, 23 Node, 29 Node) [3 Sheets]	
		Figure 6.2-54 Sh. 2 of 3

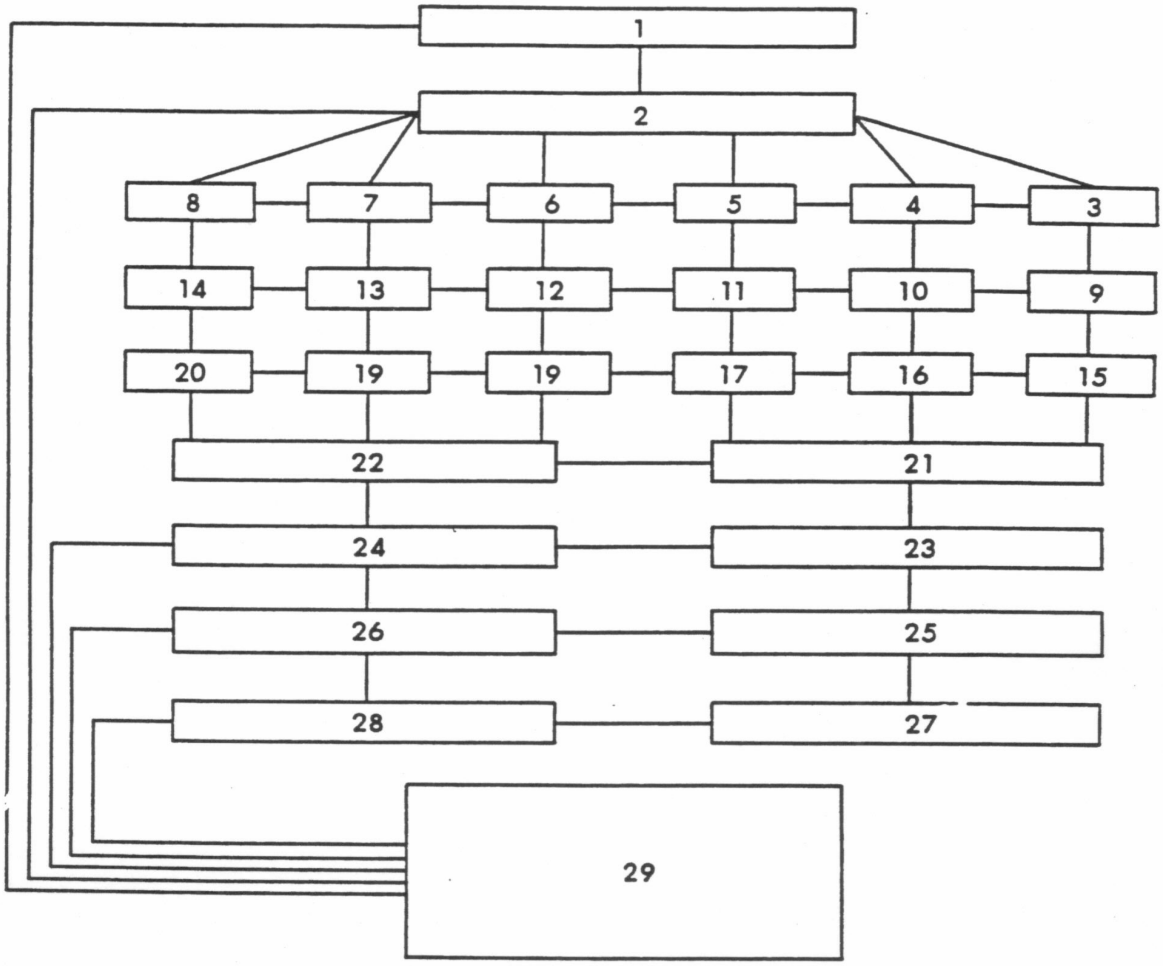

COMPARTMENT	DESCRIPTION
1	From EL 56'-6 11/16" to EL 63'-0"
2	From EL 50'-1 7/16" to EL 56'-6 11/16"
3 - 8	From EL 41'-8 3/4" to EL 50'-1 7/16"
9 - 14	From EL 33'-4 1/2" to EL 41'-8 3/4"
15 - 20	From EL 25'-0" to EL 33'-4 1/2"
21 - 22	From EL 22'-0" to EL 25'-0"
23 - 24	From EL 16'-6" to EL 22'-0"
25 - 26	From EL 8'-3" to EL 16'-6"
27 - 28	From EL 0'-0" to EL 8'-3"
29	Containment

Break occurs in Node 9

SEABROOK STATION UPDATED FINAL SAFETY ANALYSIS REPORT	Pressurizer Compartment Nodalization (15 Node, 23 Node, 29 Node) [3 Sheets]	
		Figure 6.2-54 Sh. 3 of 3

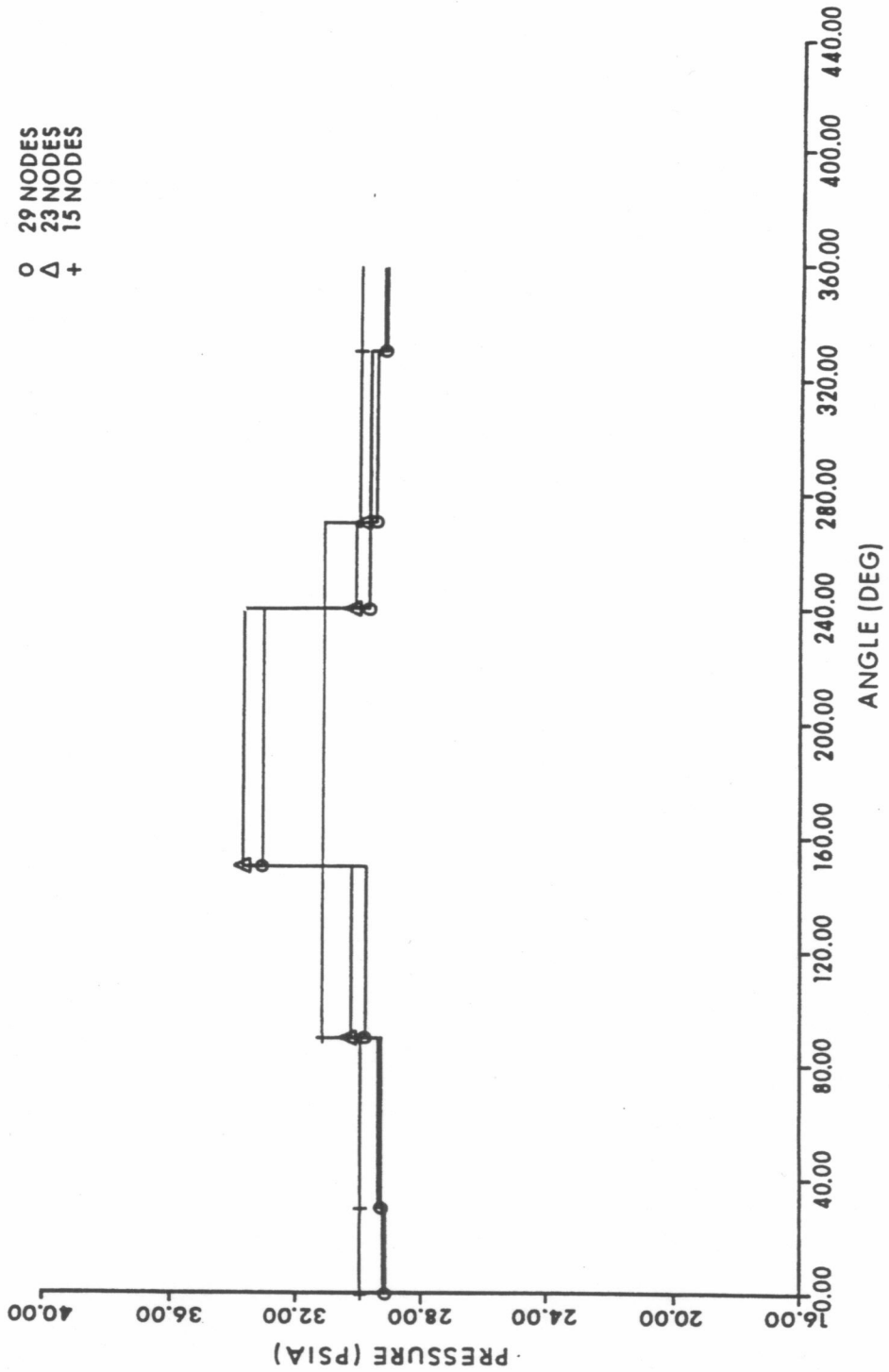

SEABROOK STATION UPDATED FINAL SAFETY ANALYSIS REPORT	Horizontal Pressure Profiles around Pressurizer at Break Location	
		Figure 6.2-55

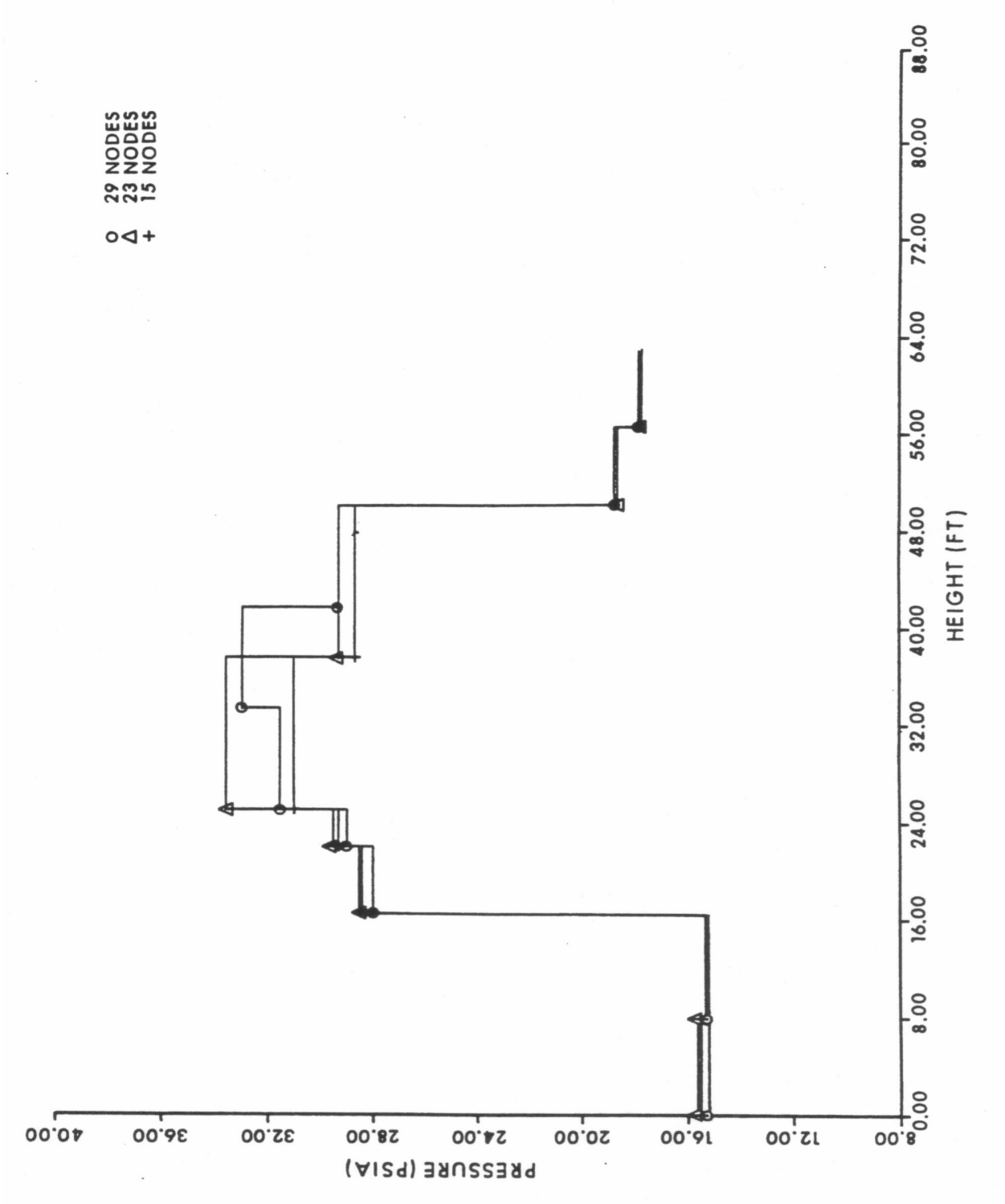

SEABROOK STATION UPDATED FINAL SAFETY ANALYSIS REPORT	Pressurizer Vertical Pressure Profile Passing through Break Node	
		Figure 6.2-56

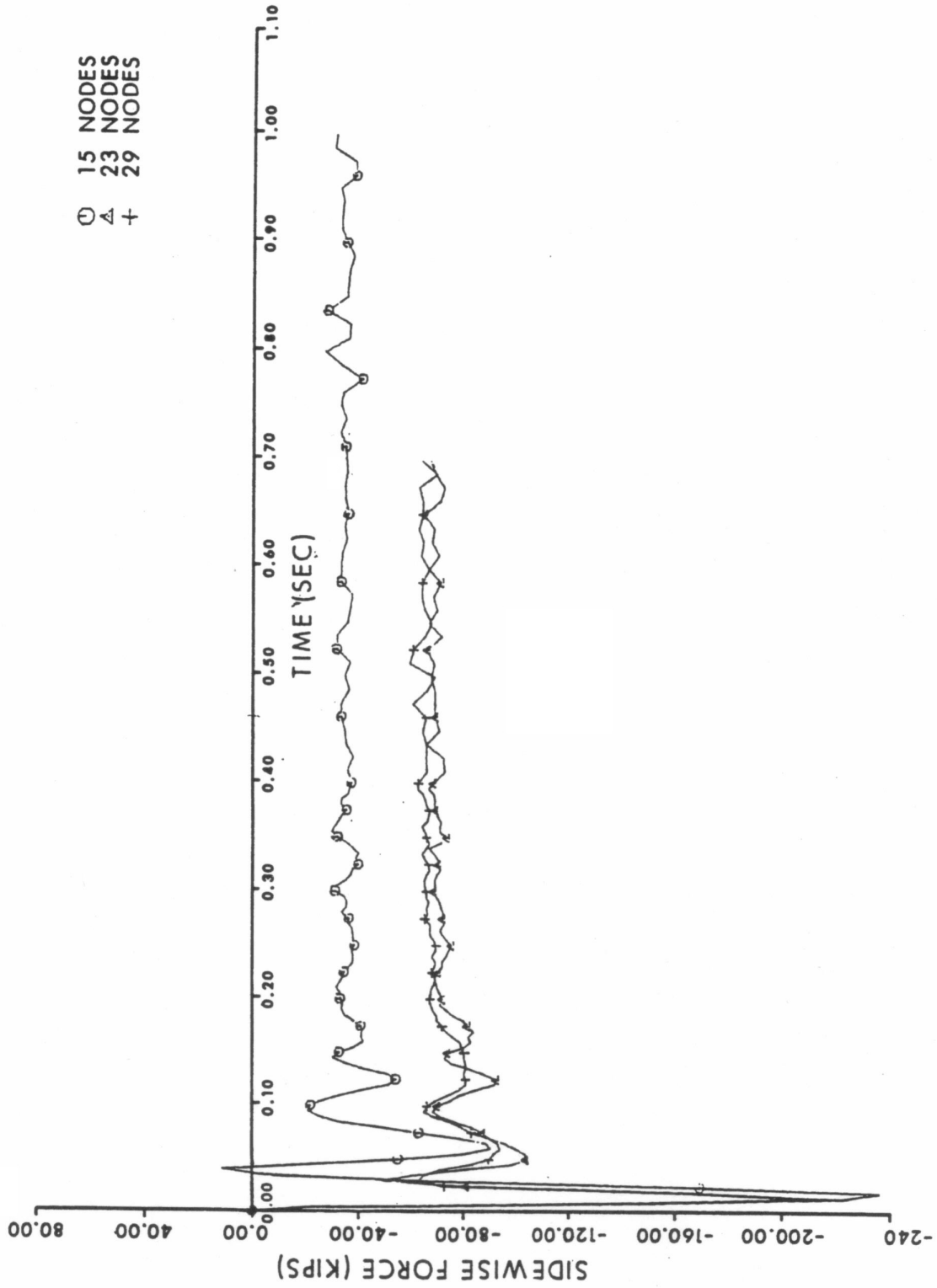

SEABROOK STATION UPDATED FINAL SAFETY ANALYSIS REPORT	Transient Forces on Pressurizer (Y-Force, X-Force) [2 Sheets]	
		Figure 6.2-57 Sh. 1 of 2

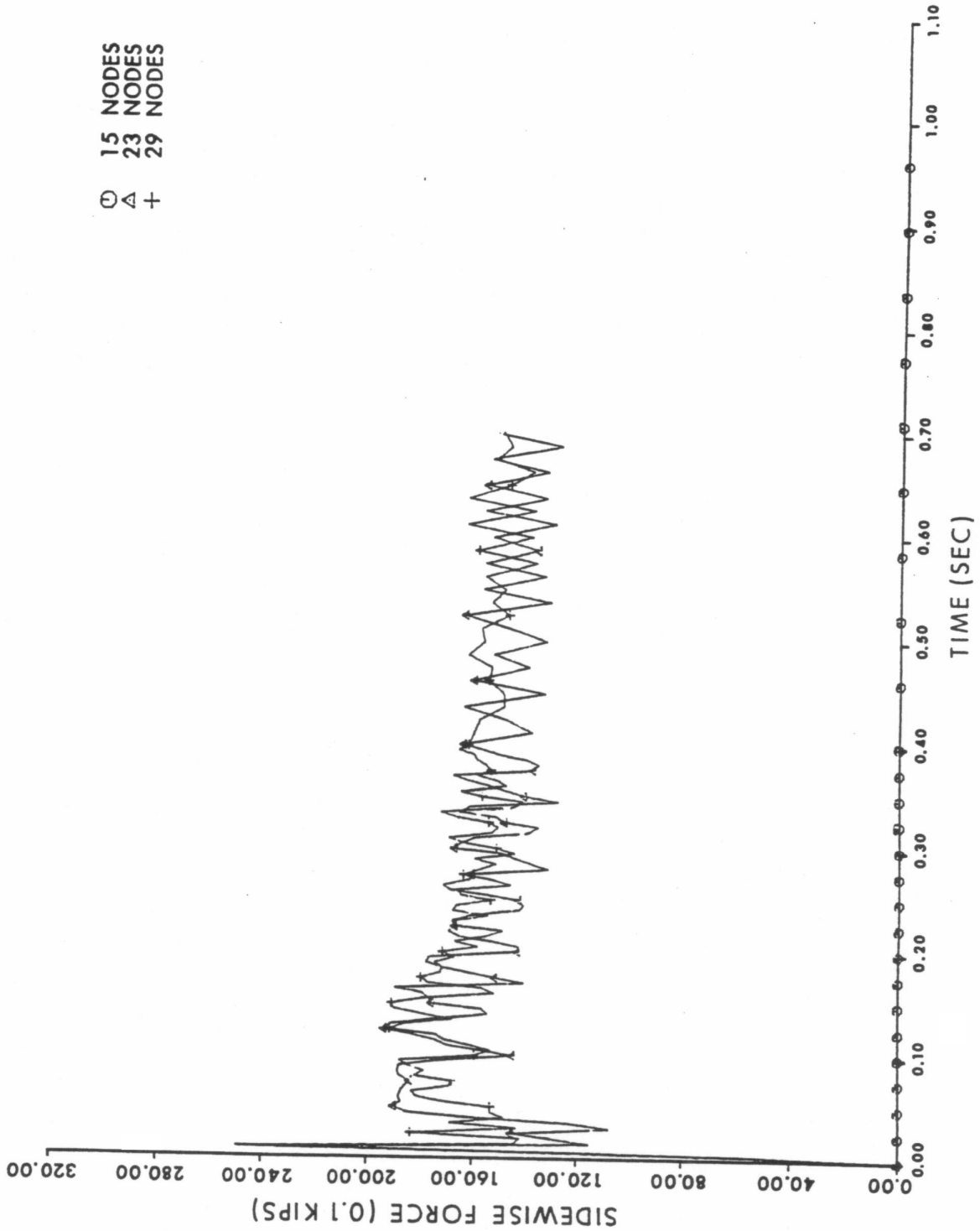

SEABROOK STATION UPDATED FINAL SAFETY ANALYSIS REPORT	Transient Forces on Pressurizer (Y-Force, X-Force) [2 Sheets]	
		Figure 6.2-57 Sh. 2 of 2

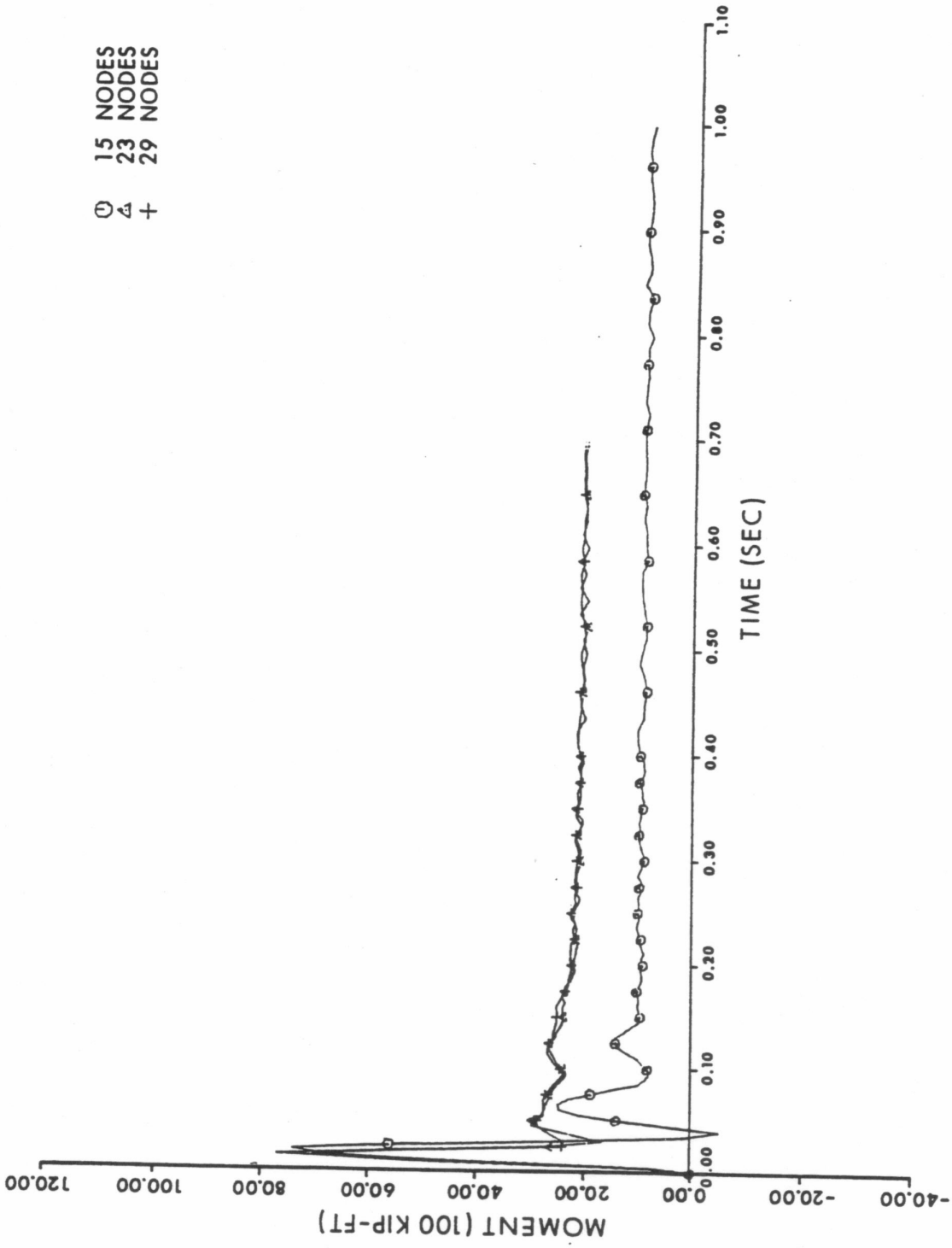

SEABROOK STATION UPDATED FINAL SAFETY ANALYSIS REPORT	Transient Moments on Pressurizer (X-Moment, Y-Moment) [2 Sheets]	
		Figure 6.2-58 Sh. 1 of 2

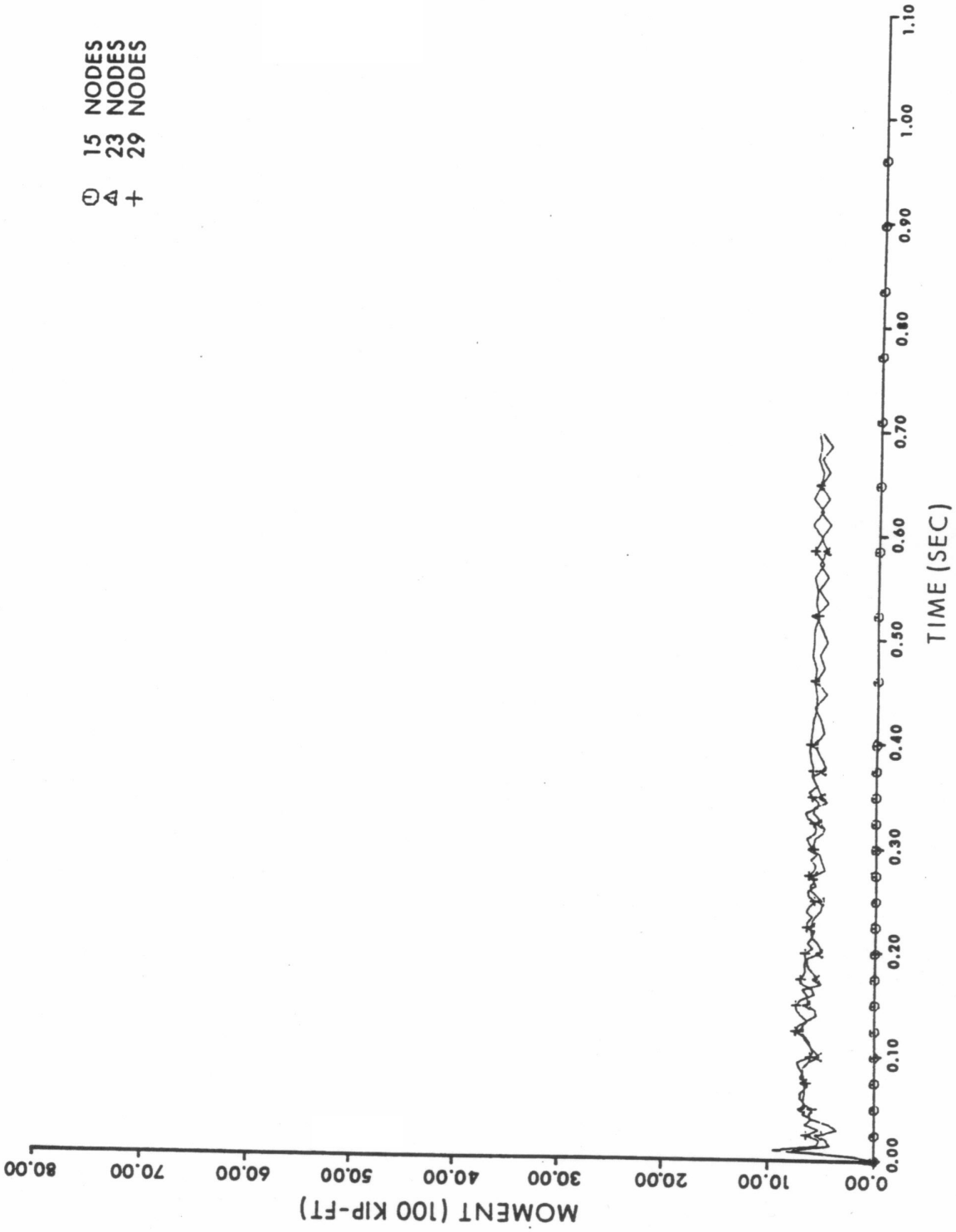

SEABROOK STATION UPDATED FINAL SAFETY ANALYSIS REPORT	Transient Moments on Pressurizer (X-Moment, Y-Moment) [2 Sheets]	
		Figure 6.2-58 Sh. 2 of 2

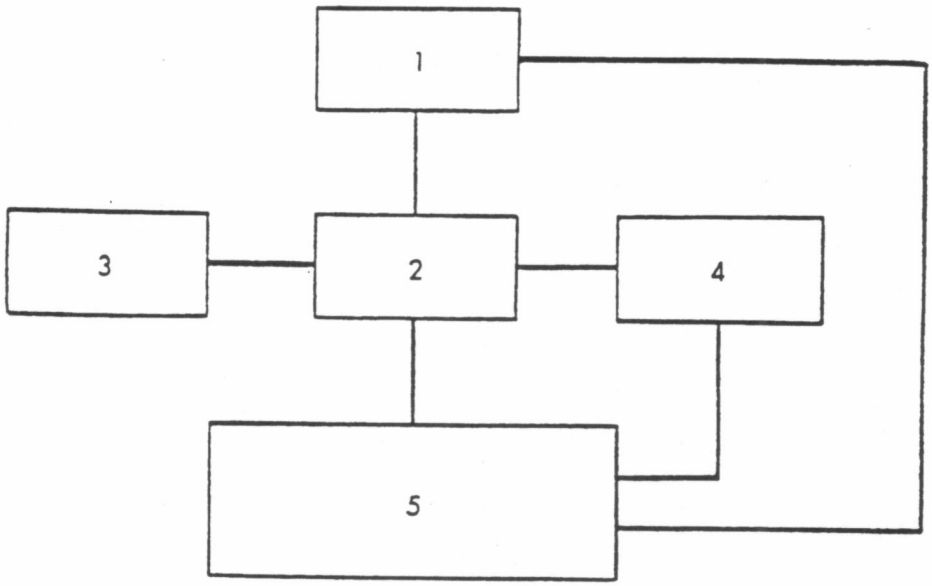

COMPARTMENT	DESCRIPTION
1	Volume Under Pressurizer Vessel Up to EL 5'-11"
2	Pressurizer Cavity Between EL (-) 5'-11" & EL (-) 26'-0"
3	Volume NE of Pressurizer Cavity at EL (-) 12'-0"
4	Volume SE of Pressurizer Cavity at EL (-) 12'-0"
5	Containment

Break occurs in Node 1.

SEABROOK STATION UPDATED FINAL SAFETY ANALYSIS REPORT	5 Node Pressurizer Skirt Cavity Nodalization for Surge Line Rupture	
		Figure 6.2-59

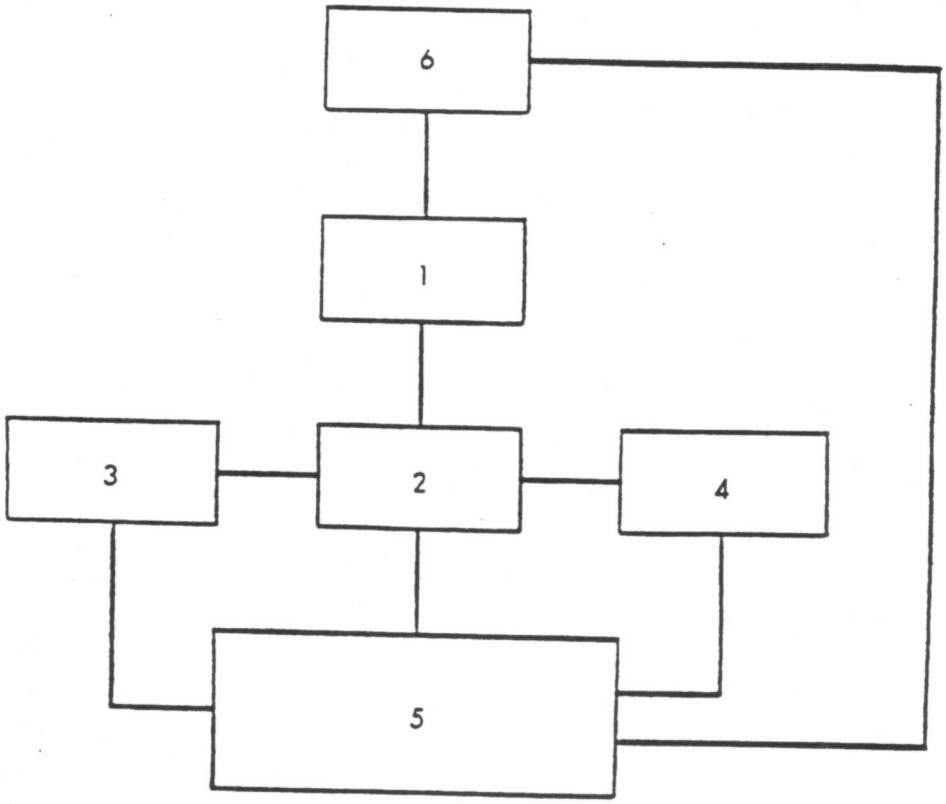

COMPARTMENT	DESCRIPTION
1	Pressurizer Cavity from (-) 5'-11" to 0'-0"
2	Pressurizer Cavity from (-) 26'-0" to (-) 5'-11"
3	Volume NE of Pressurizer Cavity at EL (-) 12'-0"
4	Volume SE of Pressurizer Cavity at EL (-) 12'-0"
5	Containment
6	Volume under Pressurizer Vessel up to EL 0'-0"

Break occurs in Node 6.

SEABROOK STATION UPDATED FINAL SAFETY ANALYSIS REPORT	6 Node Pressurizer Skirt Cavity Nodalization for Surge Line Rupture	
		Figure 6.2-60

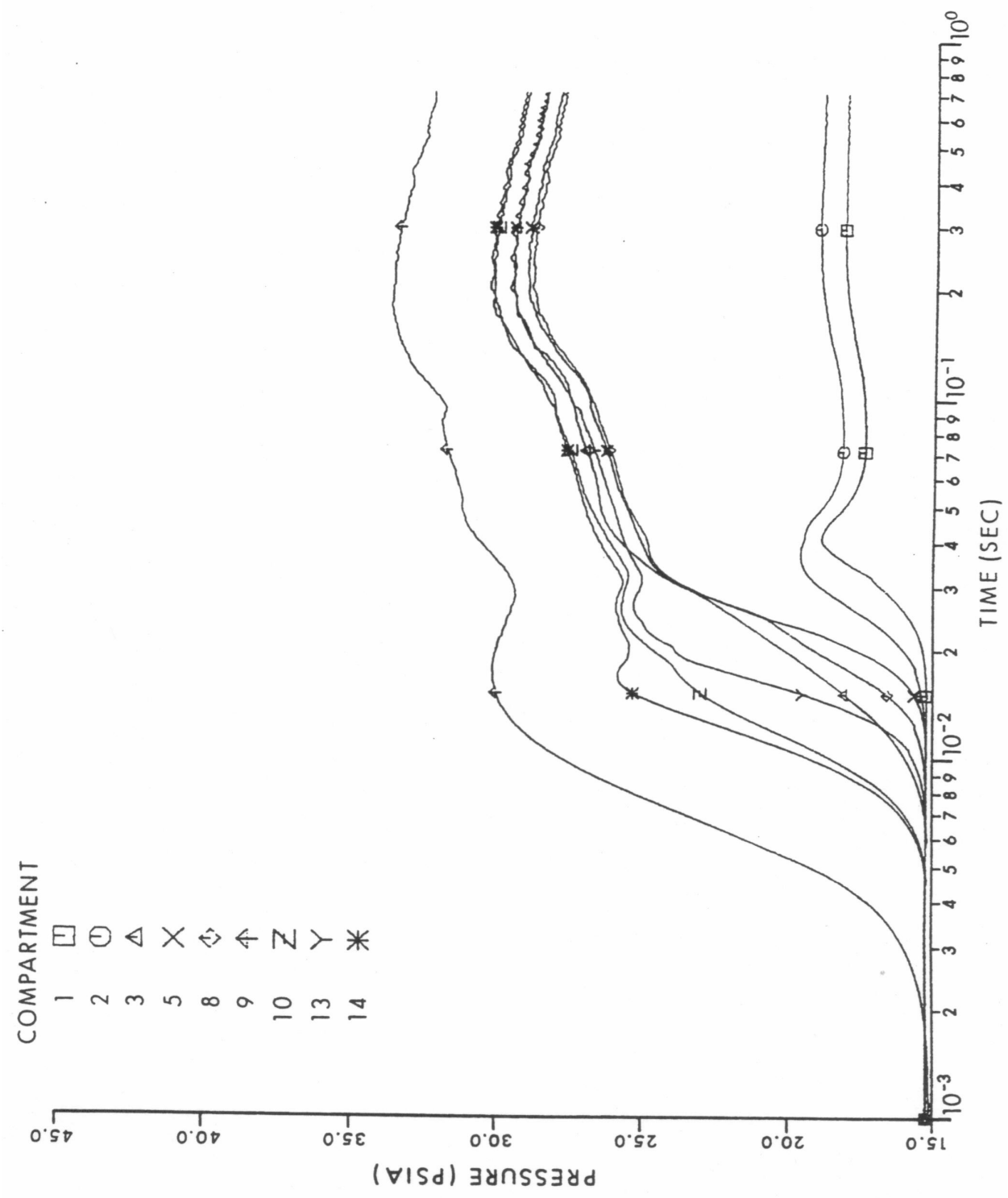

SEABROOK STATION UPDATED FINAL SAFETY ANALYSIS REPORT	Pressure Transient in Pressurizer Compartment Following Spray Line Rupture at Elevation 34'-0" [3 Sheets]	
		Figure 6.2-69 Sh. 1 of 3

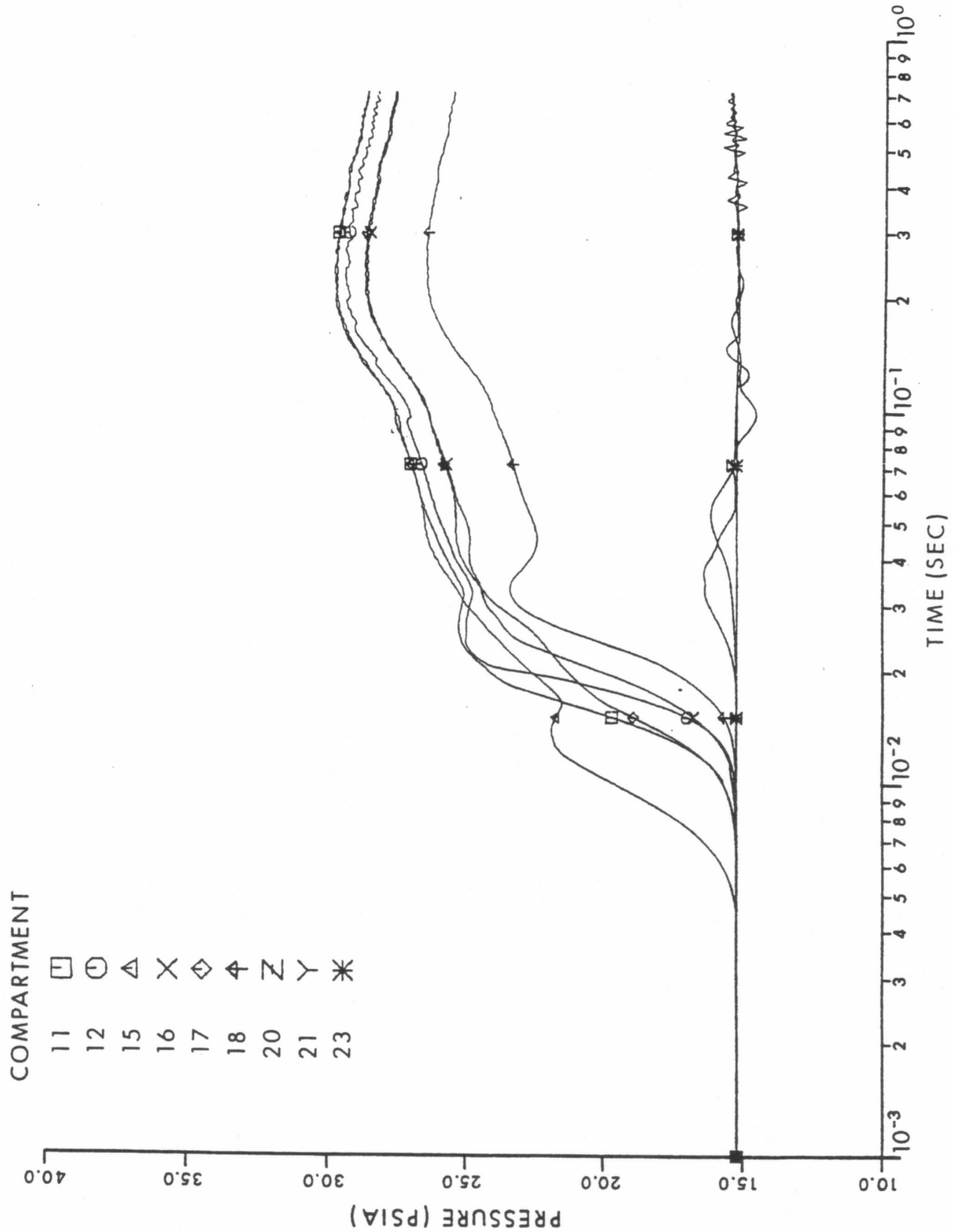

SEABROOK STATION UPDATED FINAL SAFETY ANALYSIS REPORT	Pressure Transient in Pressurizer Compartment Following Spray Line Rupture at Elevation 34'-0" [3 Sheets]	
		Figure 6.2-69 Sh. 2 of 3

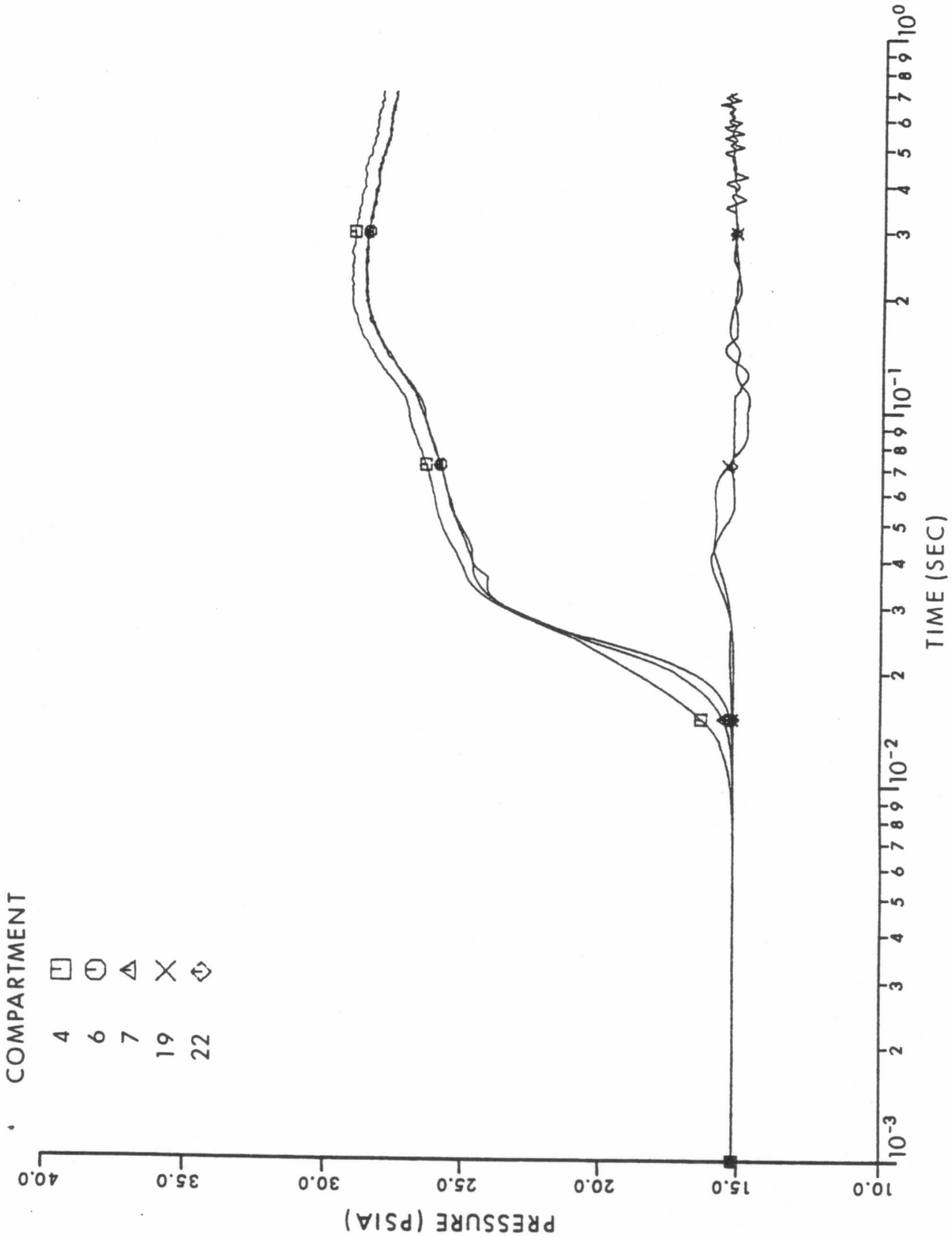

SEABROOK STATION UPDATED FINAL SAFETY ANALYSIS REPORT	Pressure Transient in Pressurizer Compartment Following Spray Line Rupture at Elevation 34'-0" [3 Sheets]	
		Figure 6.2-69 Sh. 3 of 3

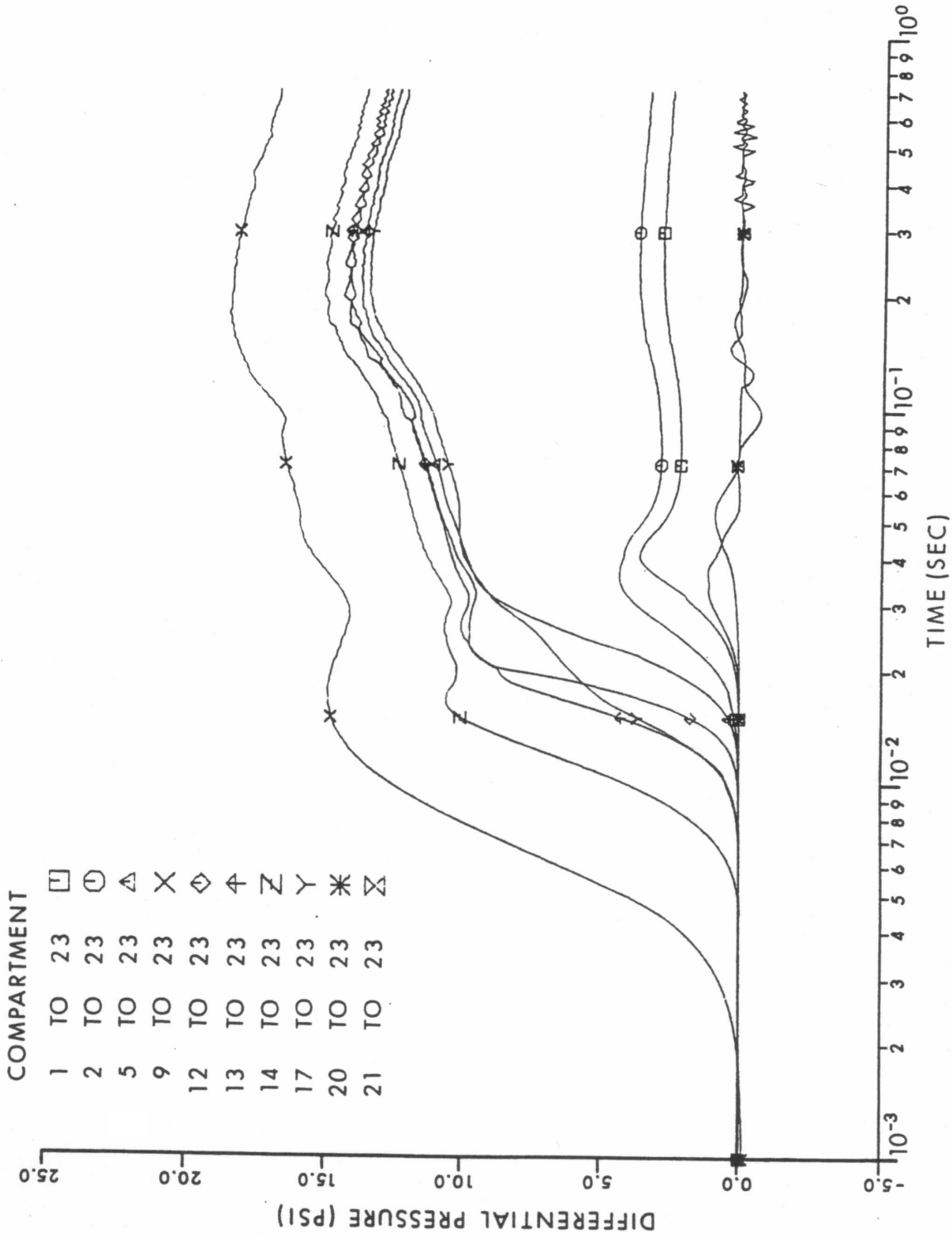

SEABROOK STATION UPDATED FINAL SAFETY ANALYSIS REPORT	Differential Pressure Transients in Pressurizer Compartment Following Spray Line Rupture at Elevation 34'-0" [2 Sheets]	
		Figure 6.2-70 Sh. 1 of 2

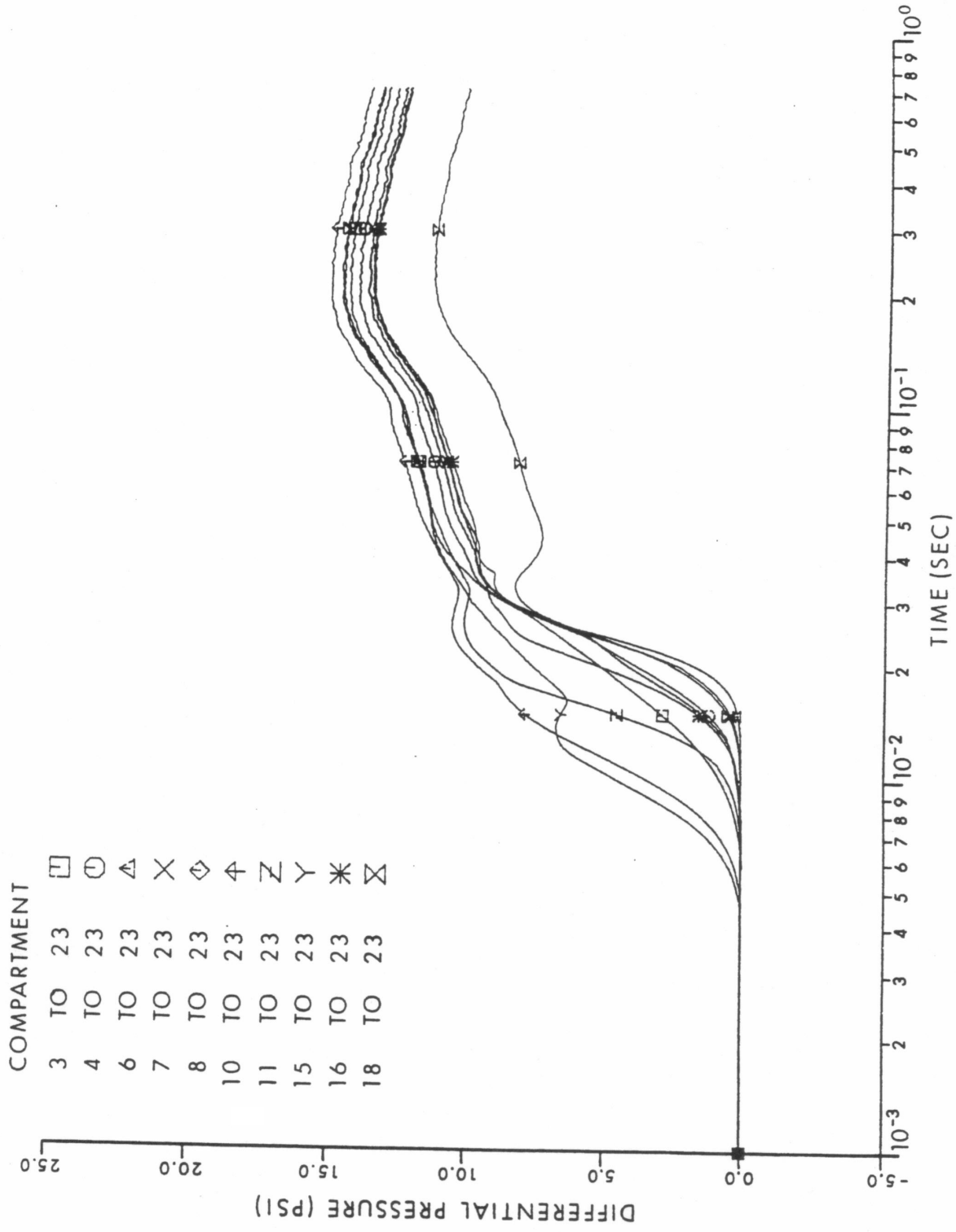

SEABROOK STATION UPDATED FINAL SAFETY ANALYSIS REPORT	Differential Pressure Transients in Pressurizer Compartment Following Spray Line Rupture at Elevation 34'-0" [2 Sheets]	
		Figure 6.2-70 Sh. 2 of 2

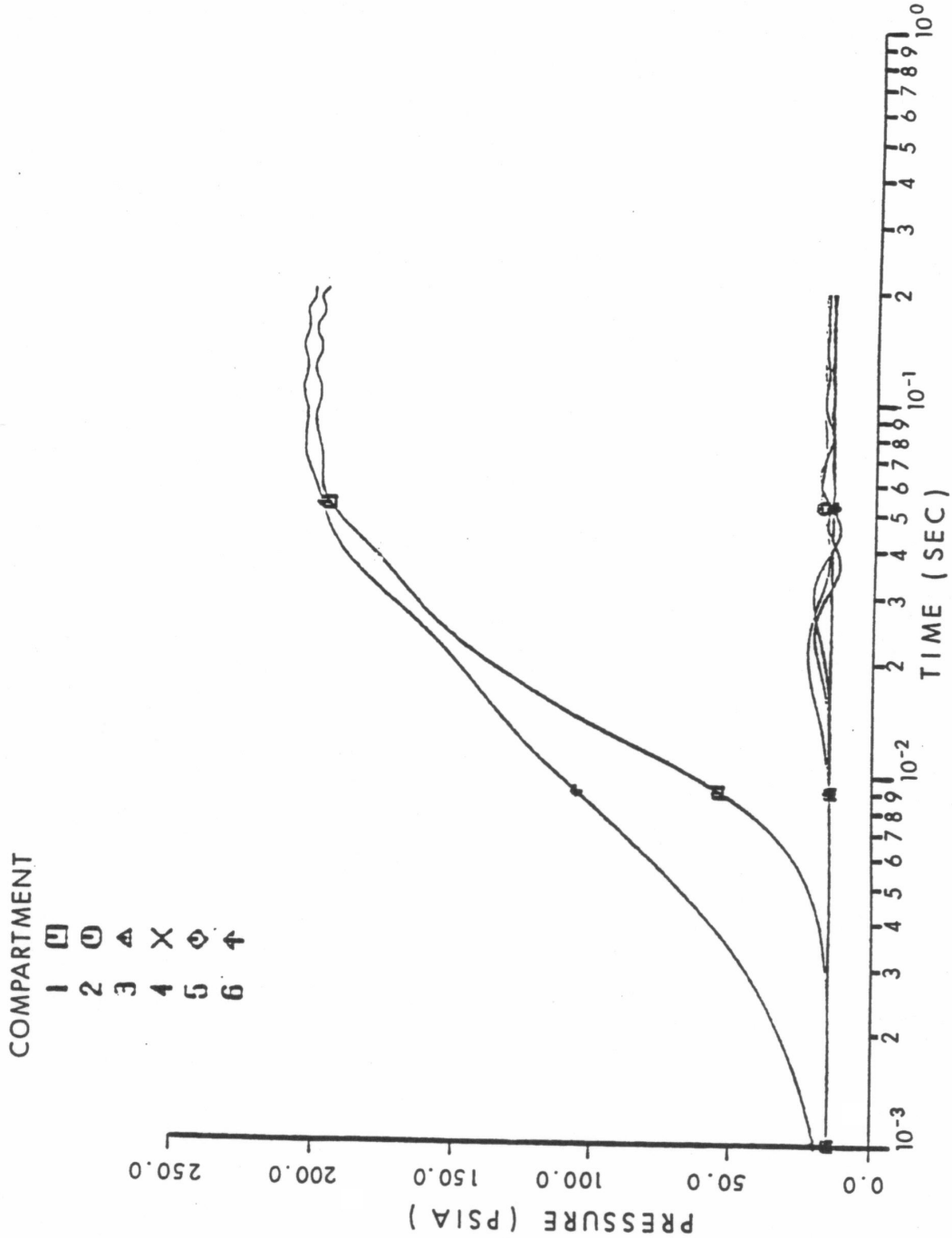

SEABROOK STATION UPDATED FINAL SAFETY ANALYSIS REPORT	Pressurizer Skirt Cavity Pressure Response (6-Node Model)	
		Figure 6.2-71

See PID-1-CBS-B20233

See 1-NHY-804979

See 805146

SEABROOK STATION UPDATED FINAL SAFETY ANALYSIS REPORT	Containment Structure Piping Zone 57 F - Plan at Elevation 119'-0"	
		Figure 6.2-76

See 805147

SEABROOK STATION UPDATED FINAL SAFETY ANALYSIS REPORT	Containment Structure Piping Zones 57E and F Sections	
		Figure 6.2-77

Deleted

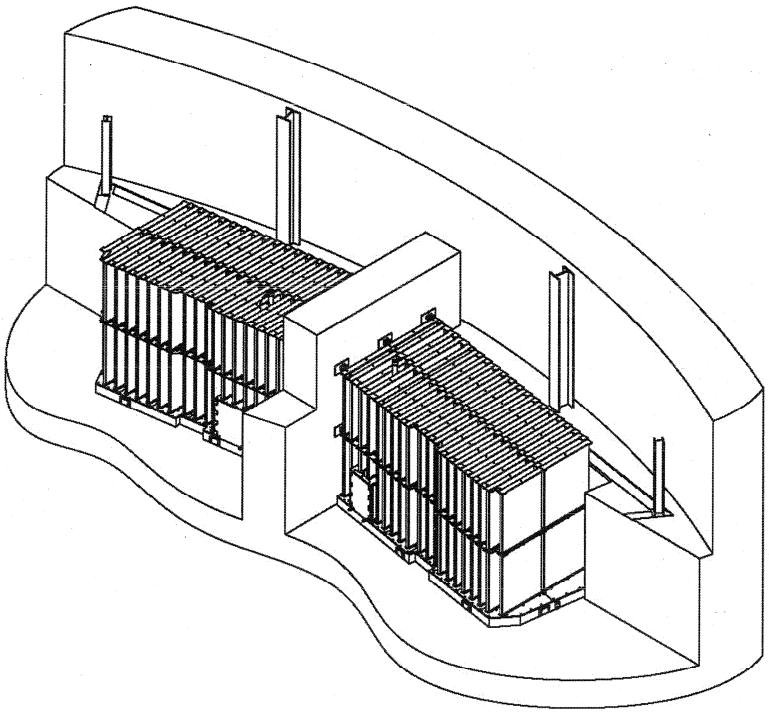

SEABROOK STATION UPDATED FINAL SAFETY ANALYSIS REPORT	Containment Recirculation Sump and Strainer	
	Rev. 12	Figure 6.2-79

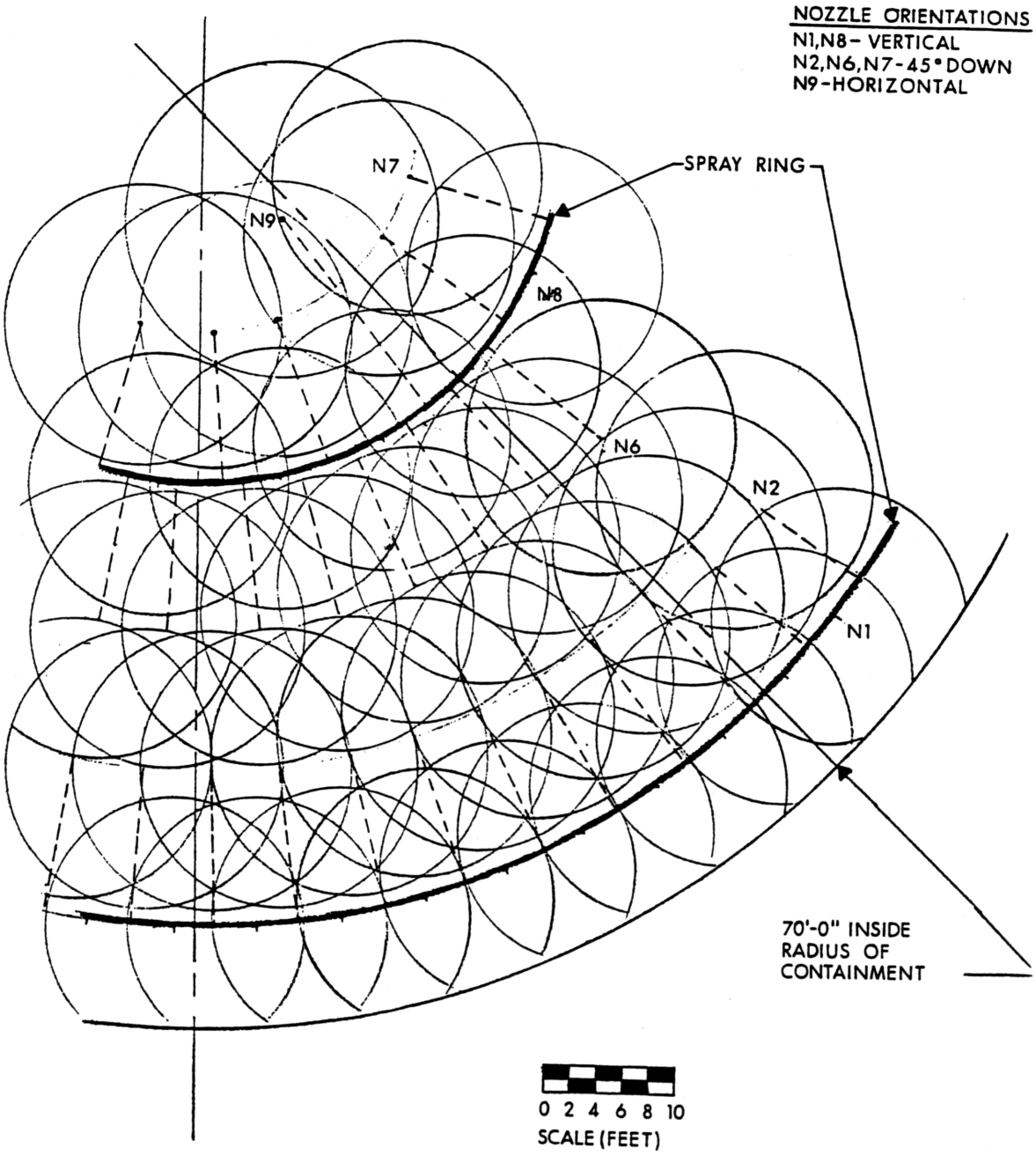

SEABROOK STATION UPDATED FINAL SAFETY ANALYSIS REPORT	Loop A Spray Pattern - Plan at Elevation 25'-0"	
		Figure 6.2-80

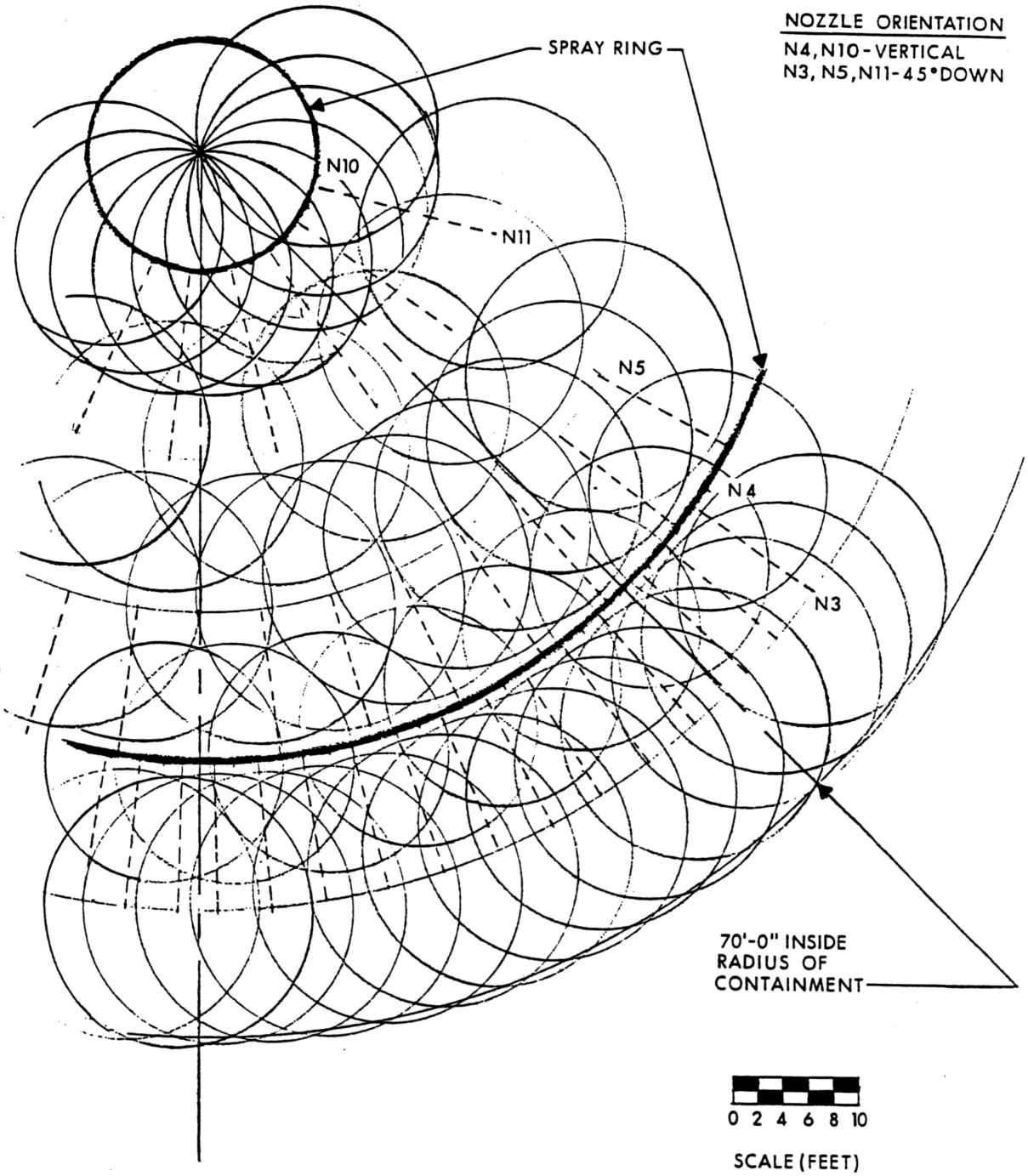

SEABROOK STATION UPDATED FINAL SAFETY ANALYSIS REPORT	Loop B Spray Pattern - Plan at Elevation 25'-0"	
		Figure 6.2-81

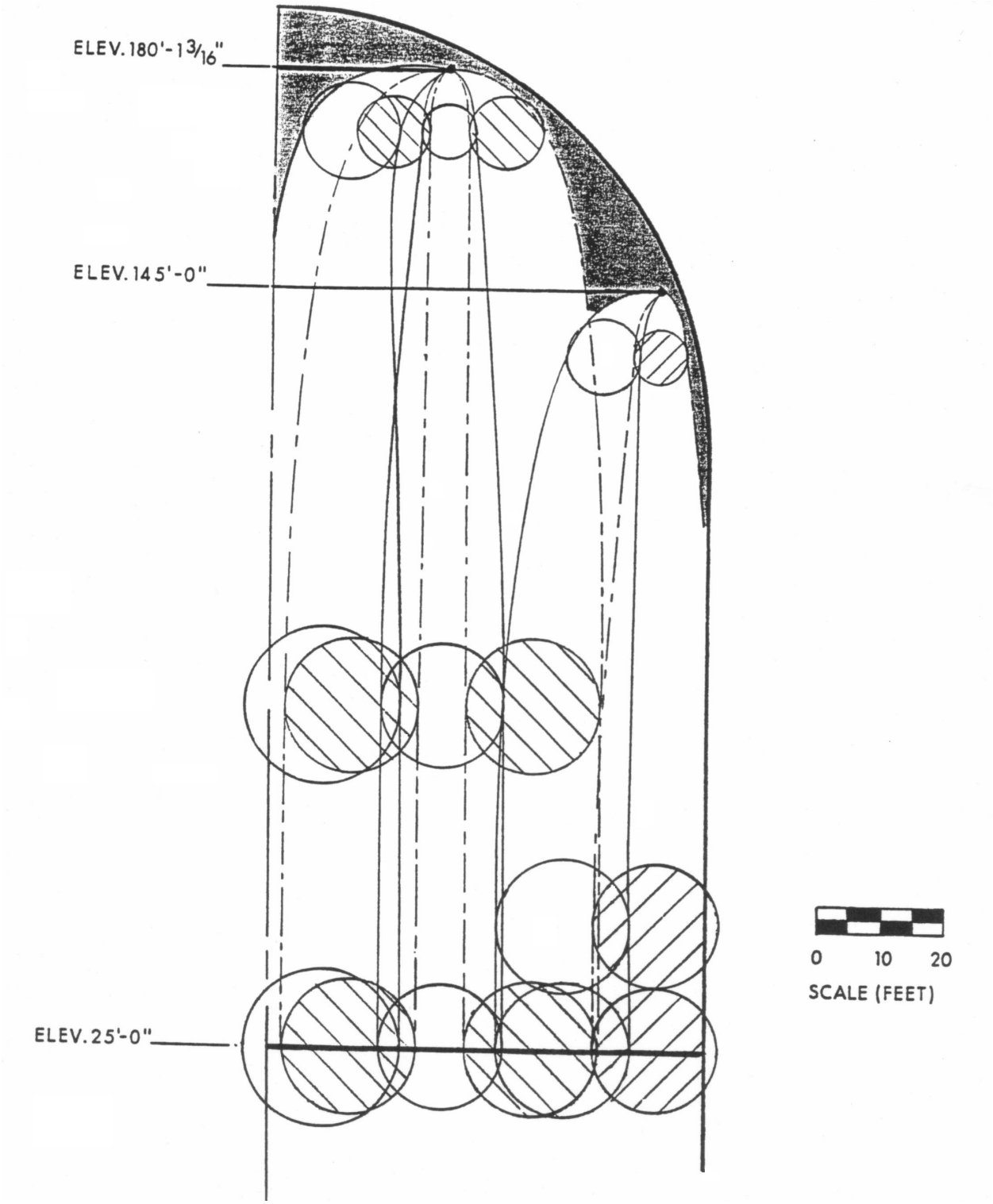

SEABROOK STATION UPDATED FINAL SAFETY ANALYSIS REPORT	Spray Loop A Coverage Pattern	
		Figure 6.2-82

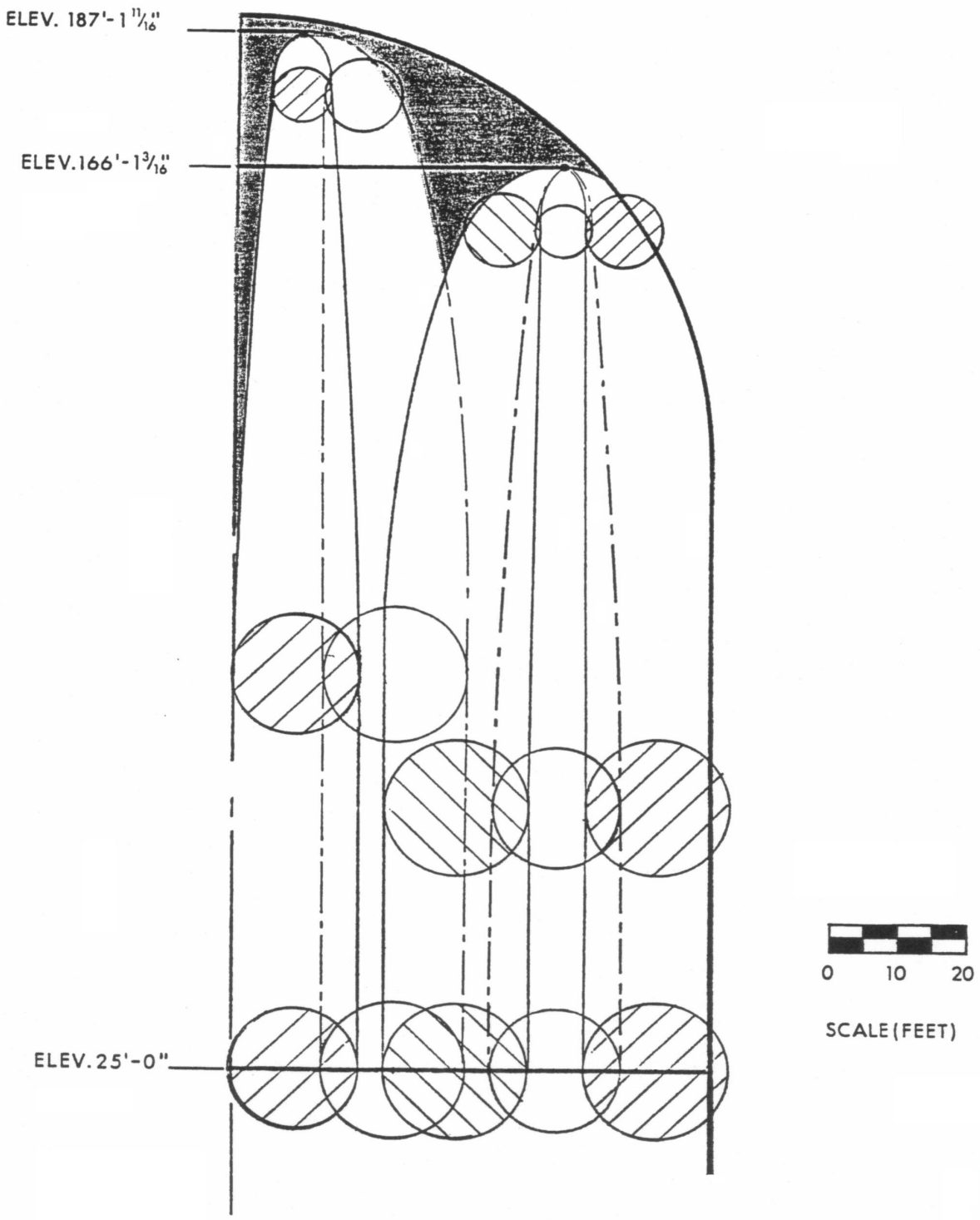

SEABROOK STATION UPDATED FINAL SAFETY ANALYSIS REPORT	Spray Loop B Coverage Pattern	
		Figure 6.2-83

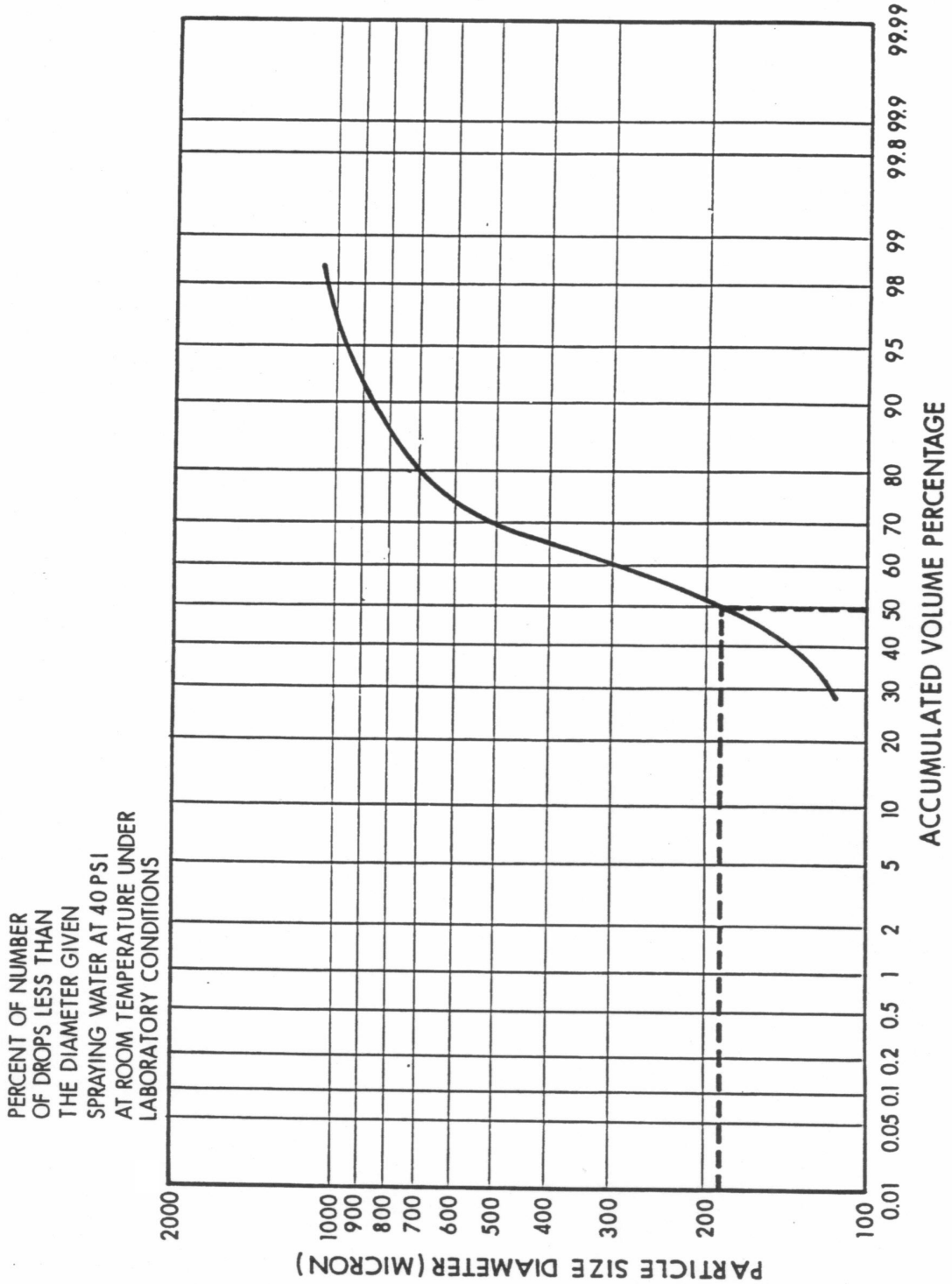

SEABROOK STATION UPDATED FINAL SAFETY ANALYSIS REPORT	Particle Size vs. Number Percentage for #1713A Nozzle	
		Figure 6.2-84

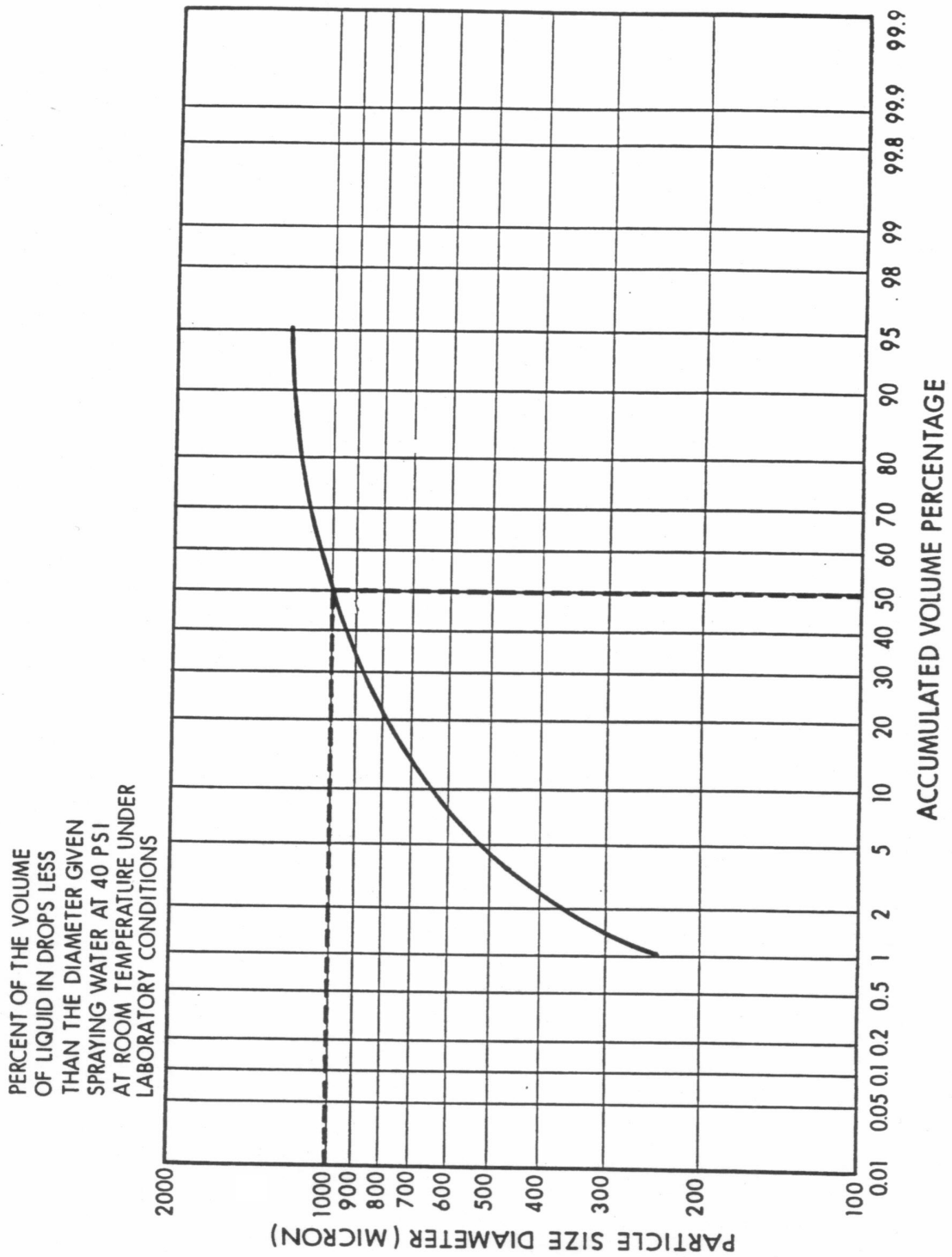

SEABROOK STATION UPDATED FINAL SAFETY ANALYSIS REPORT	Particle Size vs. Volume Percentage for #1713A Nozzle	
		Figure 6.2-85

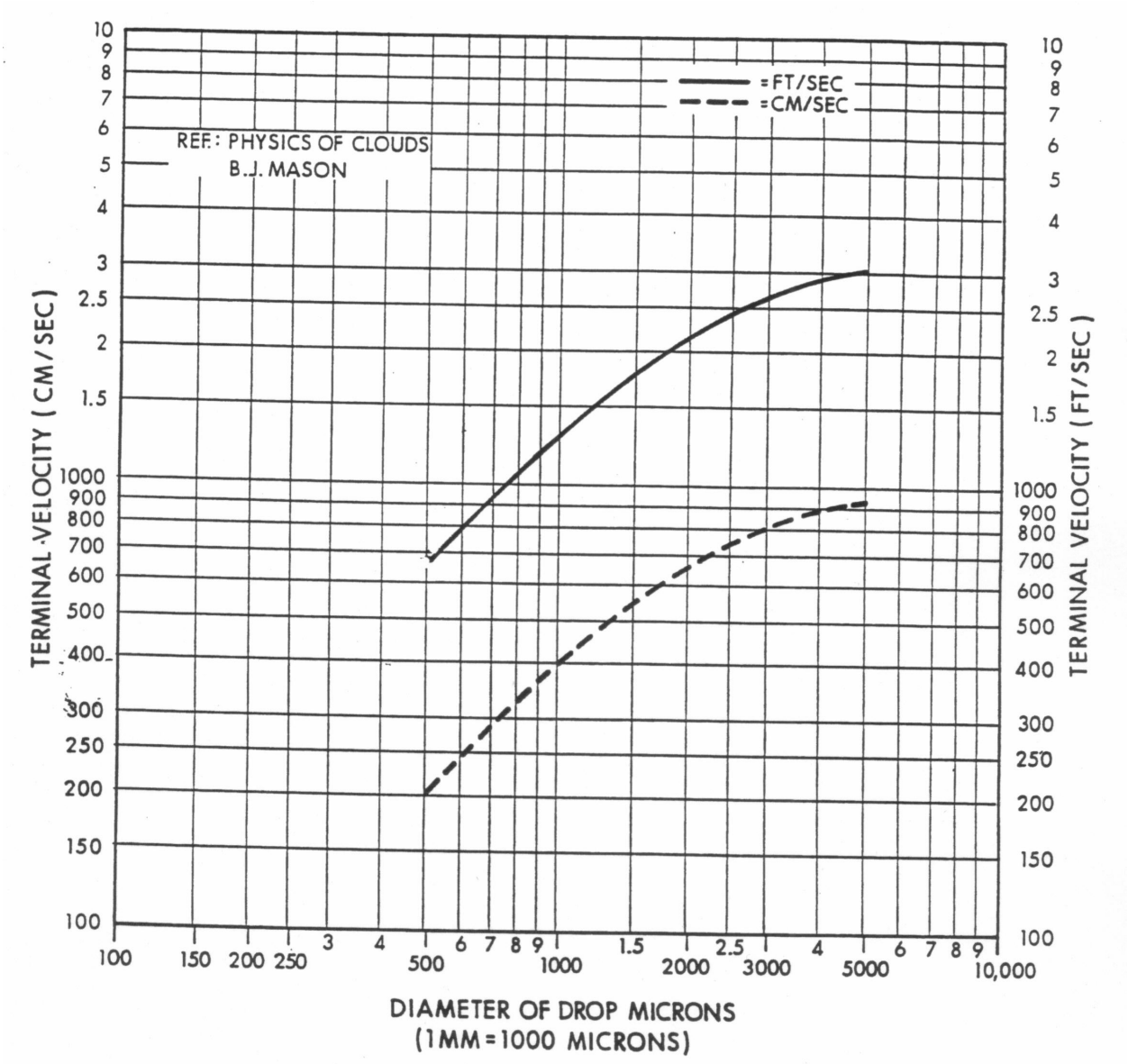

SEABROOK STATION UPDATED FINAL SAFETY ANALYSIS REPORT	Particle Size vs. Terminal Velocity	
		Figure 6.2-86

Note: This figure presents energy data related to the long-term LOCA containment response analysis of record. Section 6.2.1.8 contains a discussion of the mass and energy release data associated with this analysis of record, as compared with the mass and energy release data associated with the long-term LOCA containment response at an analyzed core power level of 3659 MWt.

SEABROOK STATION UPDATED FINAL SAFETY ANALYSIS REPORT	Energy Content of the Containment Atmosphere after Design Basis LOCA	
		Figure 6.2-87

Note: This figure presents energy data related to the long-term LOCA containment response analysis of record. Section 6.2.1.8 contains a discussion of the mass and energy release data associated with this analysis of record, as compared with the mass and energy release data associated with the long-term LOCA containment response at an analyzed core power level of 3659 MWt.

SEABROOK STATION UPDATED FINAL SAFETY ANALYSIS REPORT	Energy Content of the Containment Sump after Design Basis LOCA	
		Figure 6.2-88

Note: This figure presents energy data related to the long-term LOCA containment response analysis of record. Section 6.2.1.8 contains a discussion of the mass and energy release data associated with this analysis of record, as compared with the mass and energy release data associated with the long-term LOCA containment response at an analyzed core power level of 3659 MWt.

SEABROOK STATION UPDATED FINAL SAFETY ANALYSIS REPORT	Integrated Energy Absorbed by Structural Heat Sinks after Design Basis LOCA	
		Figure 6.2-89

Note: This figure presents energy data related to the long-term LOCA containment response analysis of record. Section 6.2.1.8 contains a discussion of the mass and energy release data associated with this analysis of record, as compared with the mass and energy release data associated with the long-term LOCA containment response at an analyzed core power level of 3659 MWt.

SEABROOK STATION UPDATED FINAL SAFETY ANALYSIS REPORT	Integrated Energy Removed from the Containment by Heat Exchangers after Design Basis LOCA	
		Figure 6.2-90

NOTES:

PRESSURIZER RELIEF TANK NITROGEN SUPPLY
PRESSURIZER RELIEF TANK MAKEUP SUPPLY
PRESSURIZER RELIEF TANK LIQUID SAMPLE
POST ACCIDENT SAMPLE PANEL

1. SAFETY CLASSIFICATIONS
   - NON-NUCLEAR CLASS
   - SAFETY CLASS 1
   - SAFETY CLASS 2
   - SAFETY CLASS 3
2. FOR ISOLATION SIGNAL AND VALVE POSITIONS AFTER FAILURE NOT SHOWN HERE REFER TO TABLE 6.2-83
3. ALPHA SUFIX DESIGNATIONS OR PENETRATION NUMBERS ARE FOR CLARIFICATION ONLY AND ARE NOT REFLECTED ON DESIGN DOCUMENTS

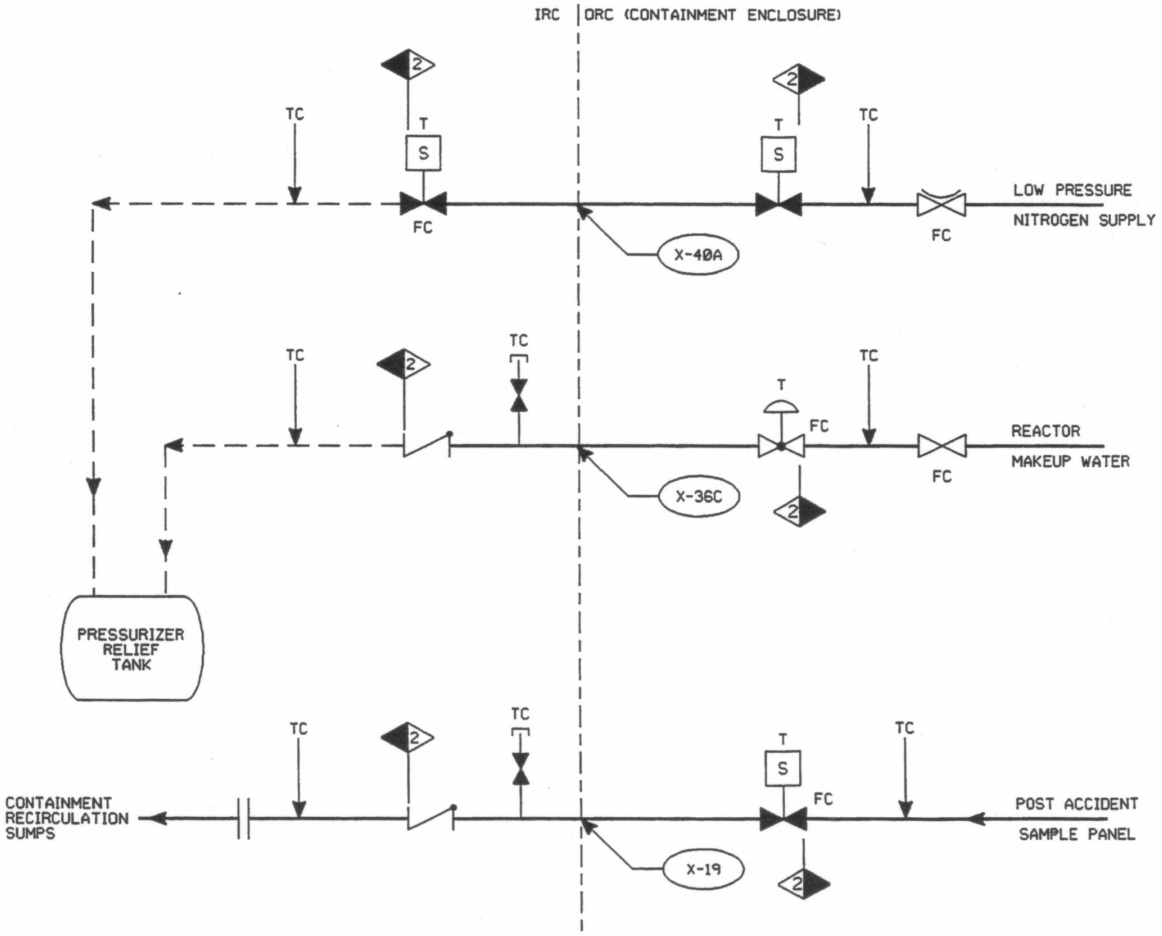

SEABROOK STATION UPDATED FINAL SAFETY ANALYSIS REPORT	Isolation Valve Diagrams [12 Sheets]	
	Rev. 13	Figure 6.2-91 Sh. 1 of 12

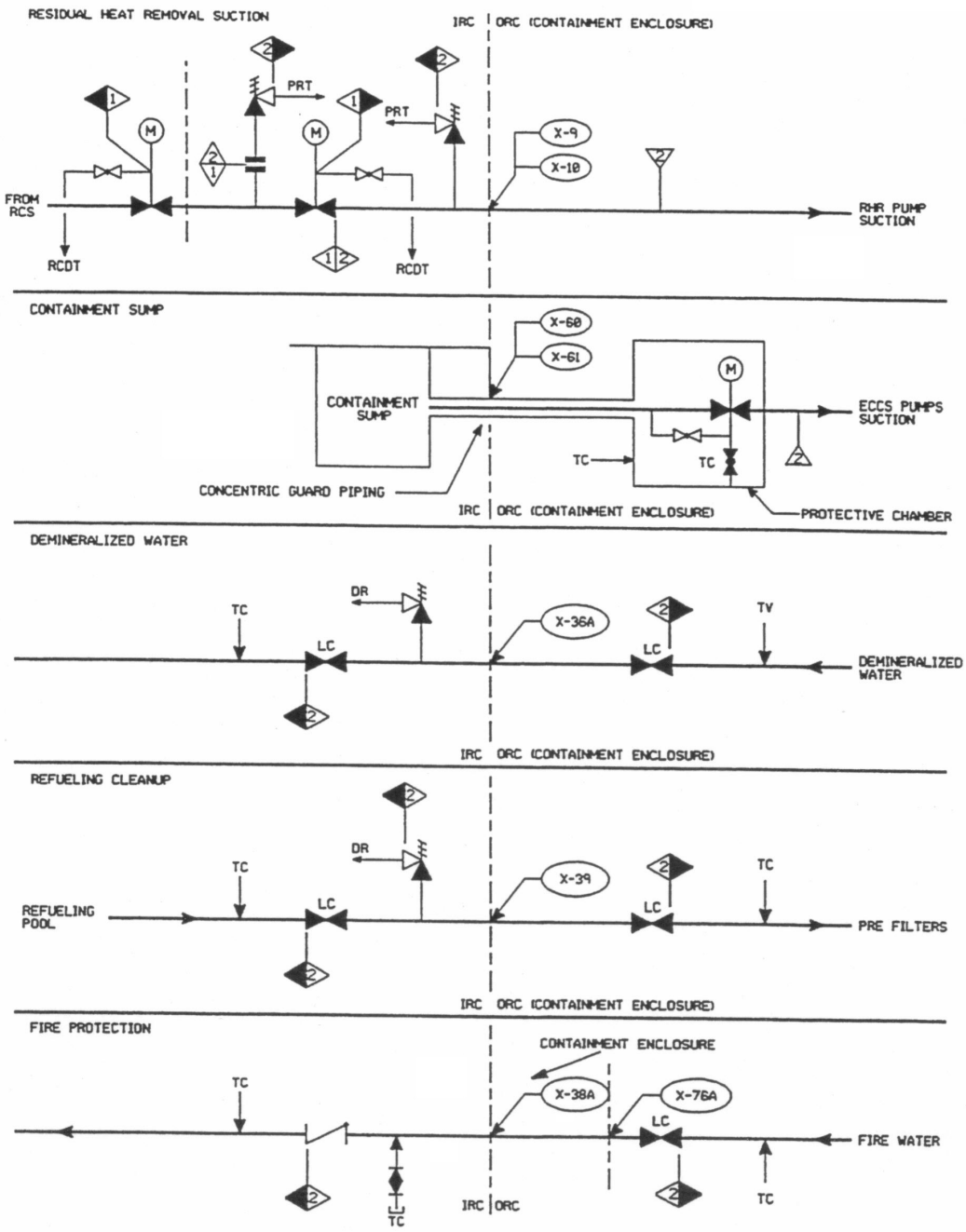

SEABROOK STATION UPDATED FINAL SAFETY ANALYSIS REPORT	Isolation Valve Diagrams [12 Sheets]	
	Rev. 13	Figure 6.2-91 Sh. 2 of 12

SAFETY INJECTION SYSTEM TO REACTOR COOLANT SYSTEM (HL)
RESIDUAL HEAT REMOVAL TO REACTOR COOLANT SYSTEM (HL)
TEST LINE TO SAFETY INJECTION SYSTEM RWST AND LOCAL SAMPLE AND BRS HOLDUP TANK
CHARGING PUMP (SI PORTION) TO REACTOR COOLANT SYSTEM

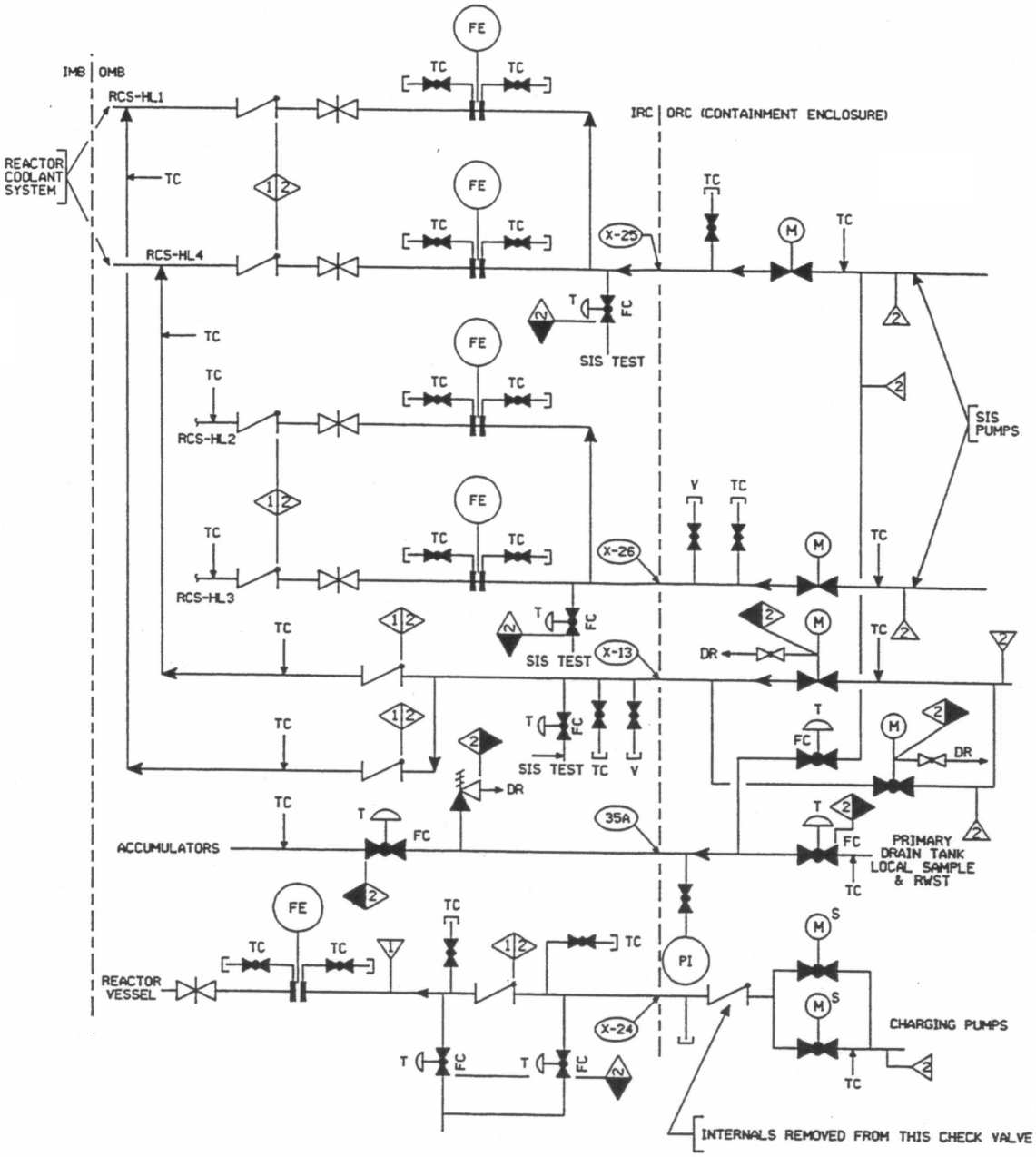

SEABROOK STATION UPDATED FINAL SAFETY ANALYSIS REPORT	Isolation Valve Diagrams [12 Sheets]	
	Rev. 13	Figure 6.2-91 Sh. 3 of 12

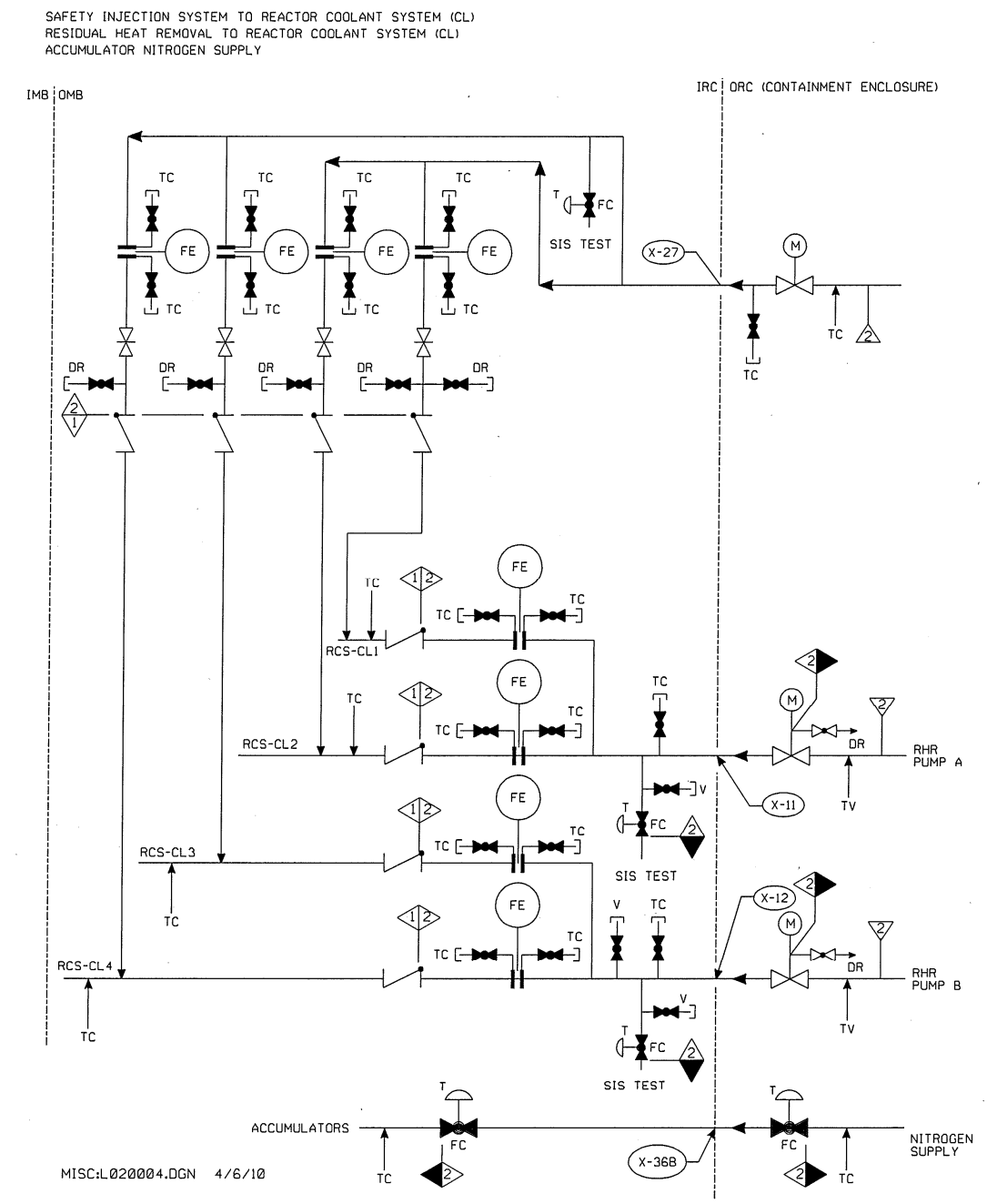

SEABROOK STATION UPDATED FINAL SAFETY ANALYSIS REPORT	Isolation Valve Diagrams [12 Sheets]	
	Rev. 13	Figure 6.2-91 Sh. 4 of 12

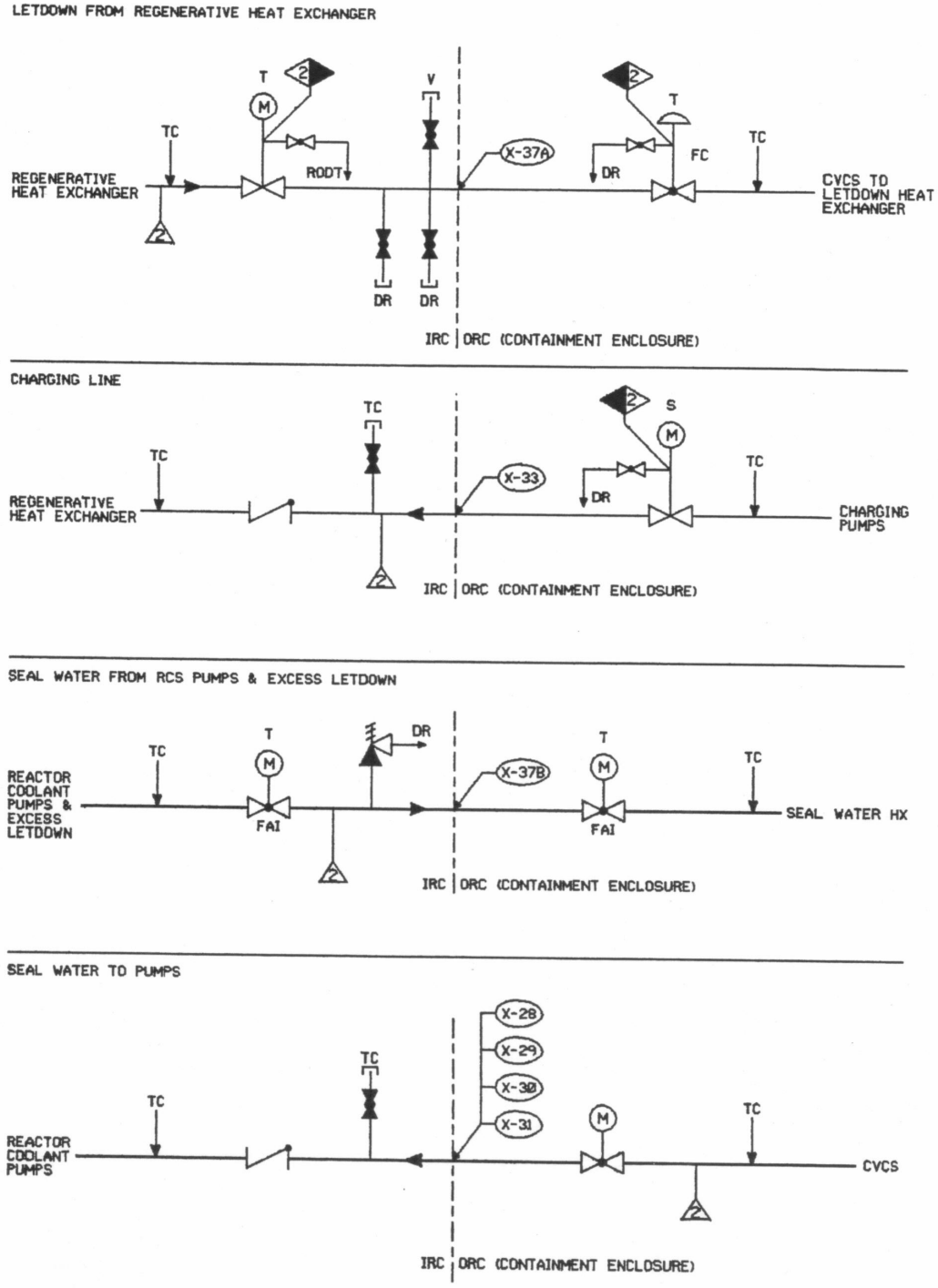

SEABROOK STATION UPDATED FINAL SAFETY ANALYSIS REPORT	Isolation Valve Diagrams [12 Sheets]	
	Rev. 13	Figure 6.2-91 Sh. 5 of 12

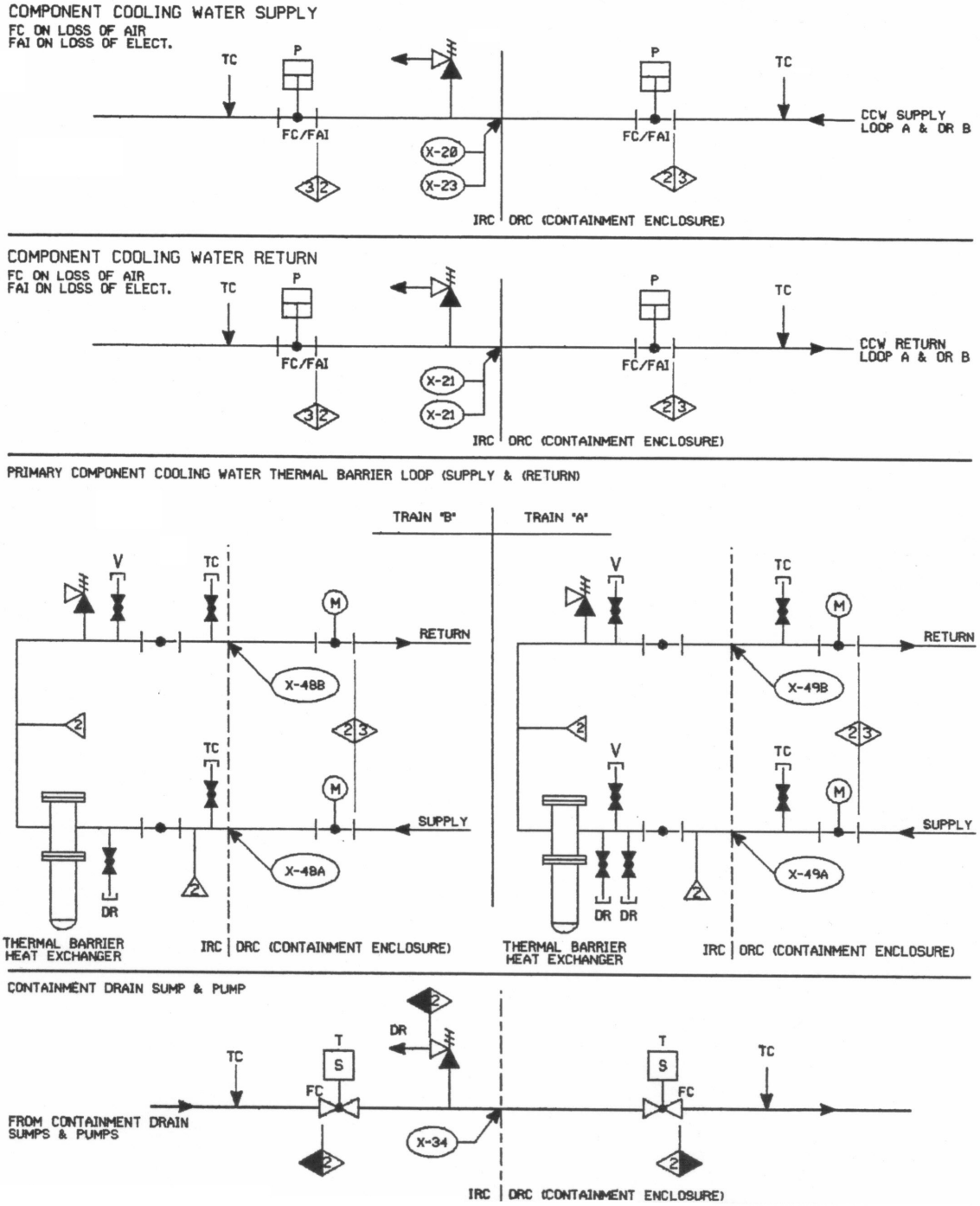

SEABROOK STATION UPDATED FINAL SAFETY ANALYSIS REPORT	Isolation Valve Diagrams [12 Sheets]	
	Rev. 13	Figure 6.2-91 Sh. 6 of 12

REACTOR COOLANT DRAIN TANK TO WASTE DISPOSAL SYSTEM
REACTOR COOLANT DRAIN TANK TO PRIMARY DRAIN TANK

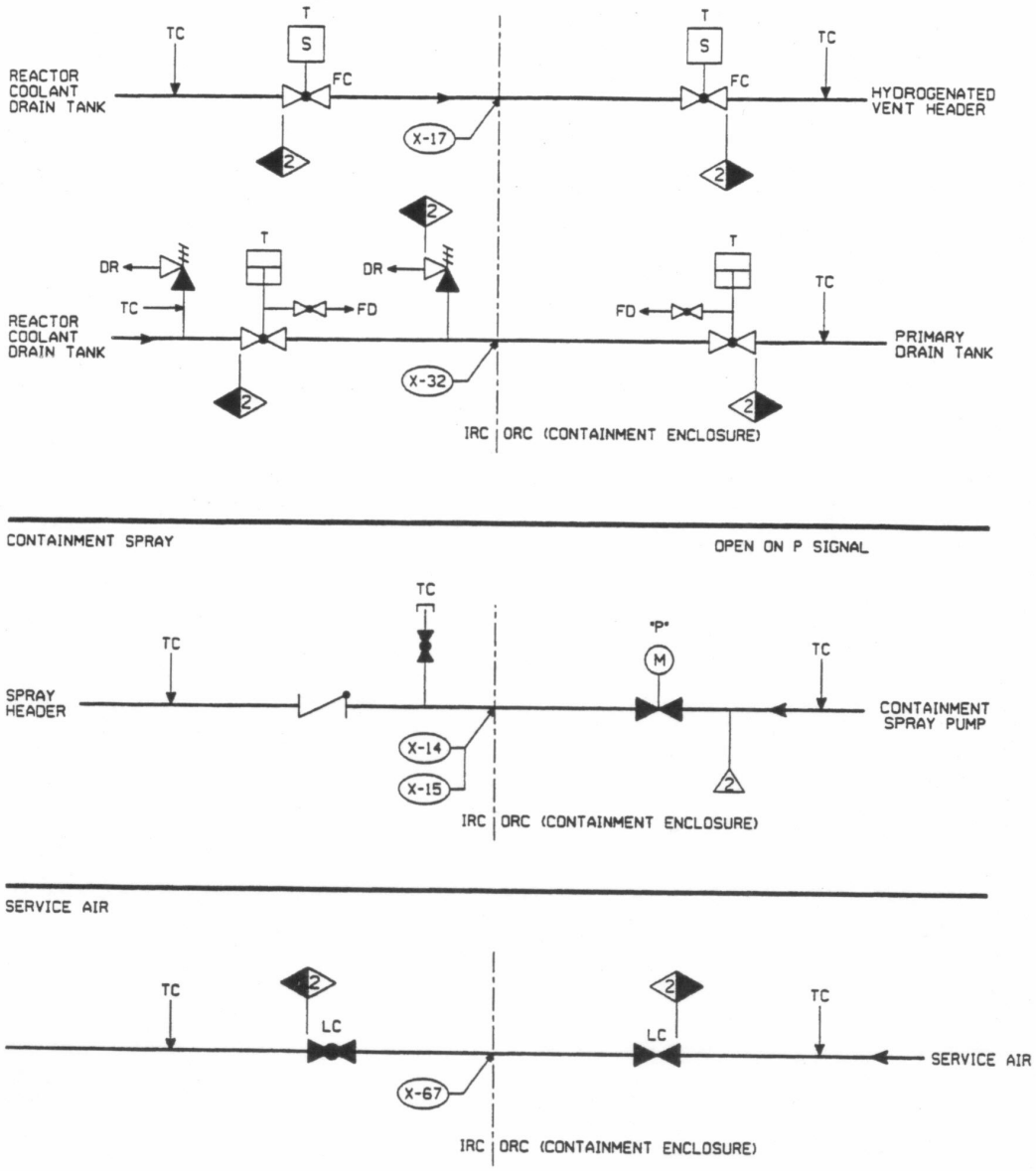

SEABROOK STATION UPDATED FINAL SAFETY ANALYSIS REPORT	Isolation Valve Diagrams [12 Sheets]	
	Rev. 13	Figure 6.2-91 Sh. 7 of 12

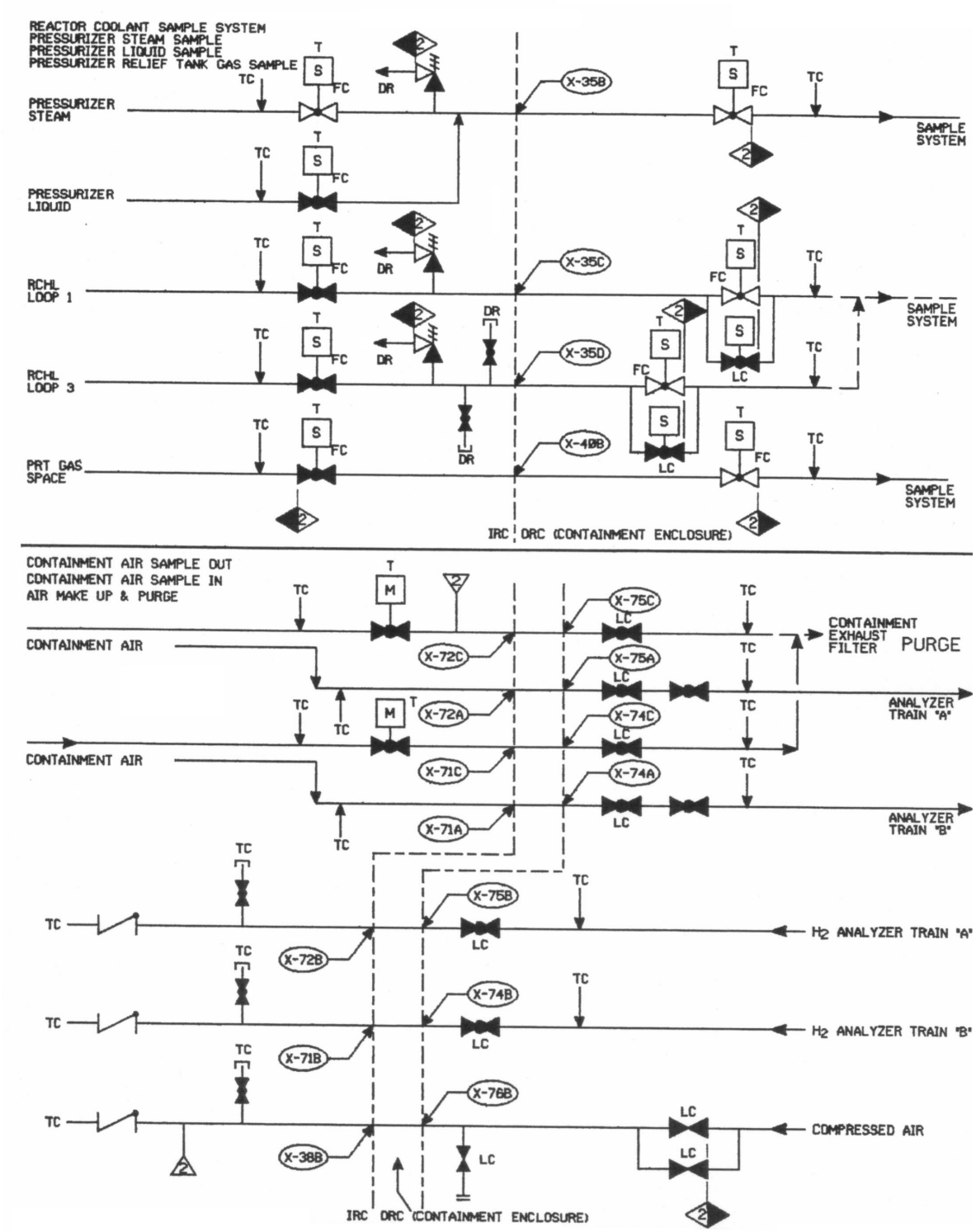

SEABROOK STATION UPDATED FINAL SAFETY ANALYSIS REPORT	Isolation Valve Diagrams [12 Sheets]	
	Rev. 13	Figure 6.2-91 Sh. 8 of 12

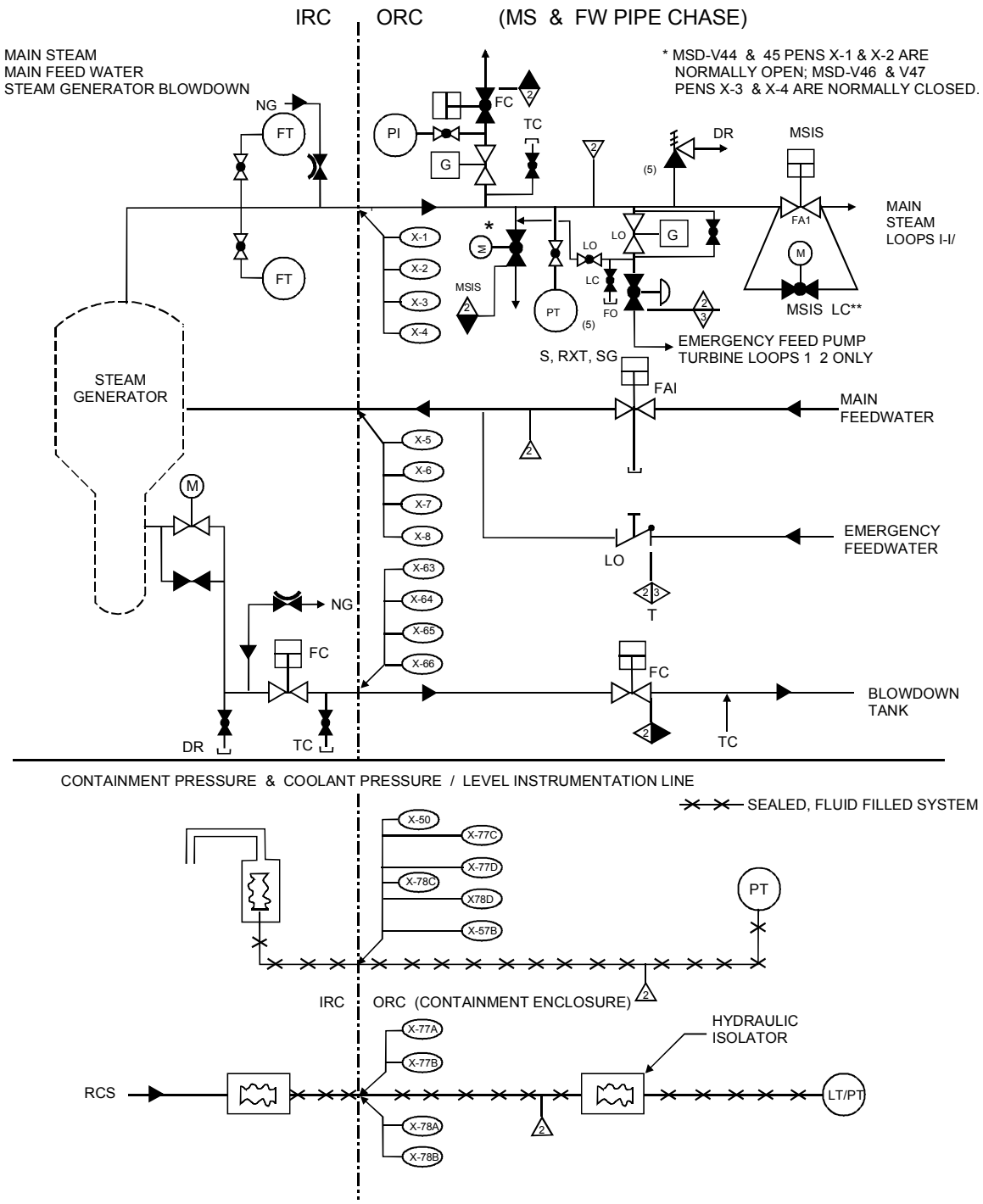

** During startup and surveillances, the MSIV bypass valves may be open with breakers closed, which allows MSIS and control switch operation.

006_Figure 02-91 Sh9

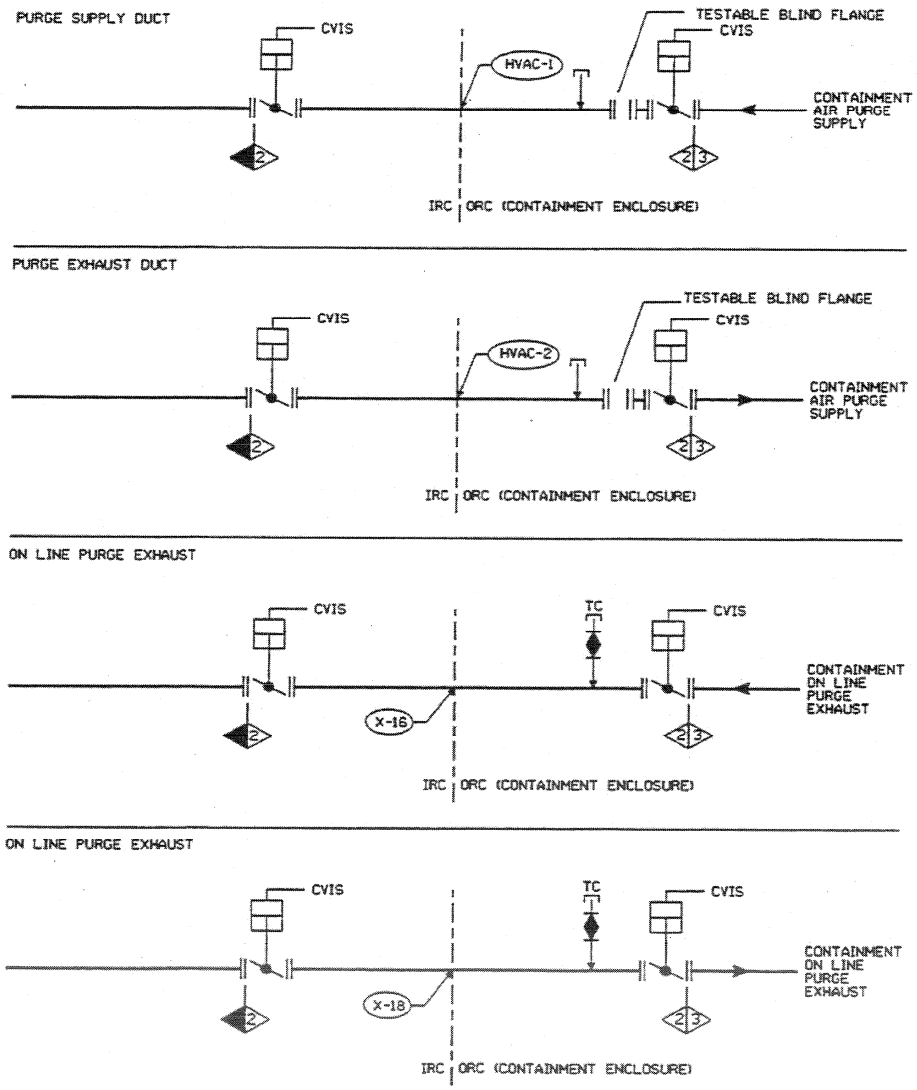
PURGE SUPPLY DUCT
CVIS
HVAC-1
TESTABLE BLIND FLANGE
CVIS
CONTAINMENT AIR PURGE SUPPLY
2
2 3
IRC
ORC (CONTAINMENT ENCLOSURE)
PURGE EXHAUST DUCT
CVIS
HVAC-2
TESTABLE BLIND FLANGE
CVIS
CONTAINMENT AIR PURGE SUPPLY
2
2 3
IRC
ORC (CONTAINMENT ENCLOSURE)
ON LINE PURGE EXHAUST
CVIS
TC
CVIS
CONTAINMENT ON LINE PURGE EXHAUST
X-16
2
2 3
IRC
ORC (CONTAINMENT ENCLOSURE)
ON LINE PURGE EXHAUST
CVIS
TC
CVIS
CONTAINMENT ON LINE PURGE EXHAUST
X-18
2
2 3
IRC
ORC (CONTAINMENT ENCLOSURE)

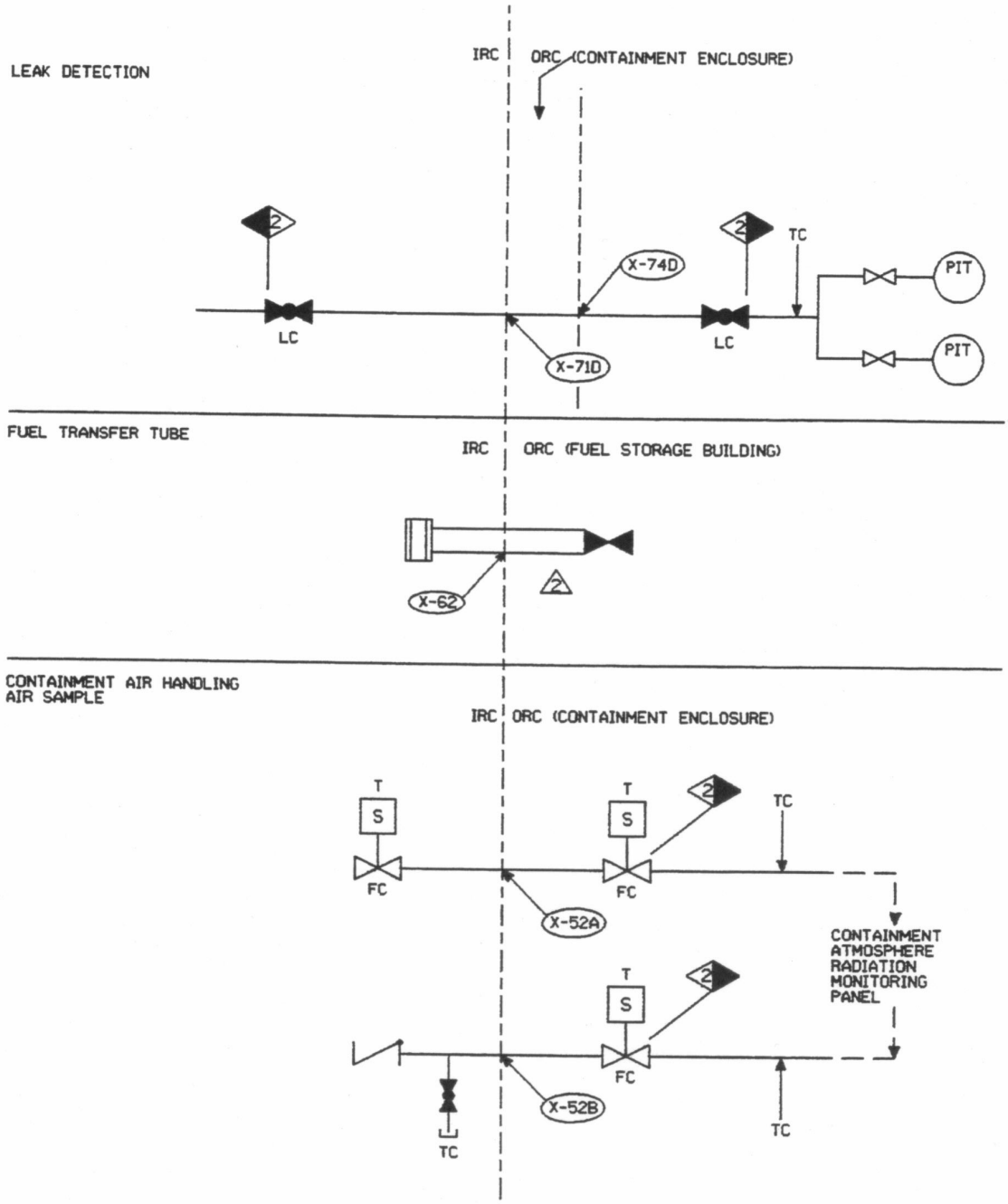

SEABROOK STATION UPDATED FINAL SAFETY ANALYSIS REPORT	Isolation Valve Diagrams [12 Sheets]	
	Rev. 13	Figure 6.2-91 Sh. 11 of 12

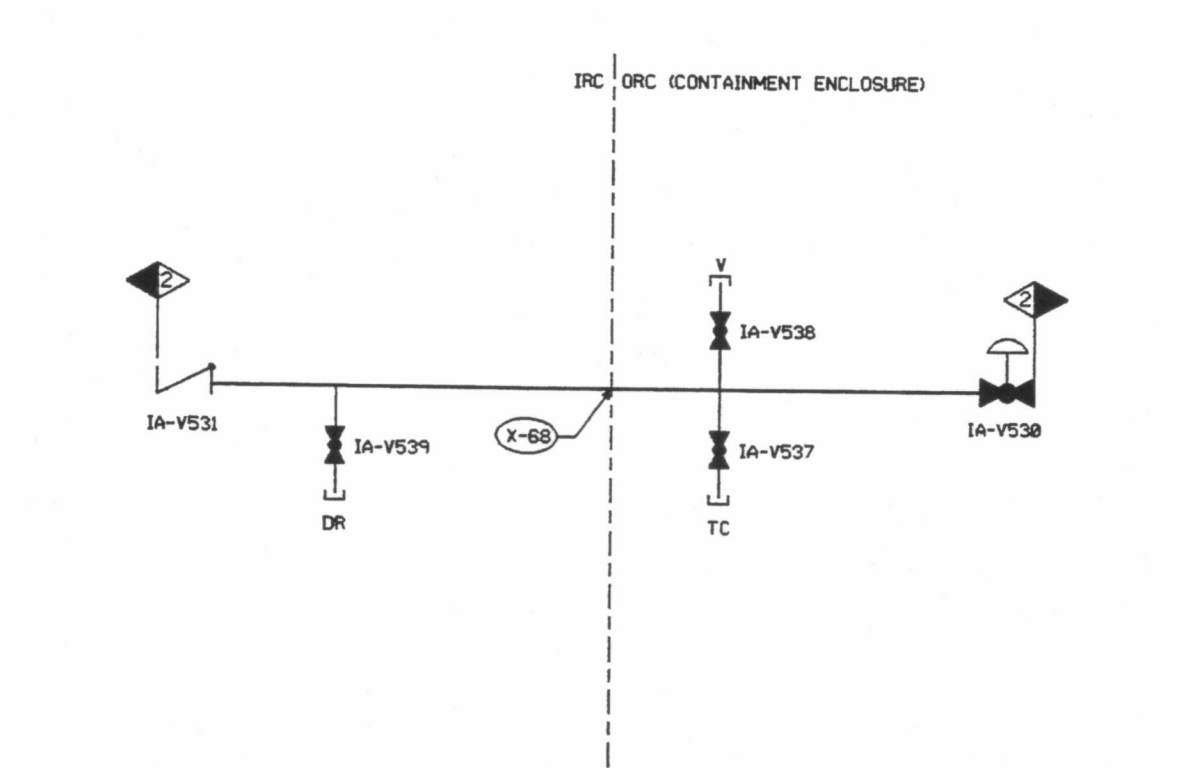

SEABROOK STATION UPDATED FINAL SAFETY ANALYSIS REPORT	Isolation Valve Diagrams [12 Sheets]	
	Rev. 13	Figure 6.2-91 Sh. 12 of 12

See PID-1-CGC-B20612

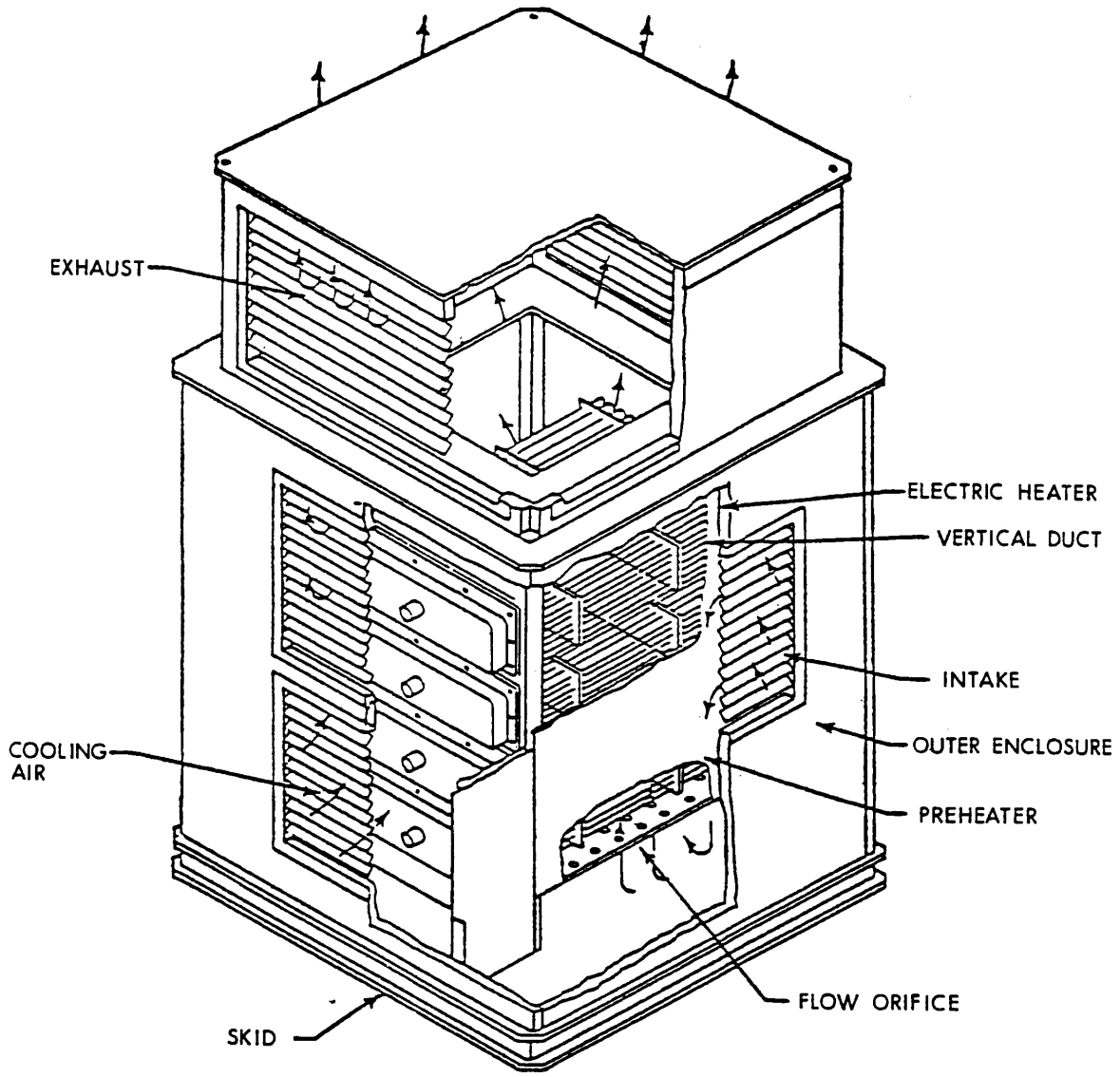

SEABROOK STATION UPDATED FINAL SAFETY ANALYSIS REPORT	Electric Hydrogen Recombiner	
		Figure 6.2-94

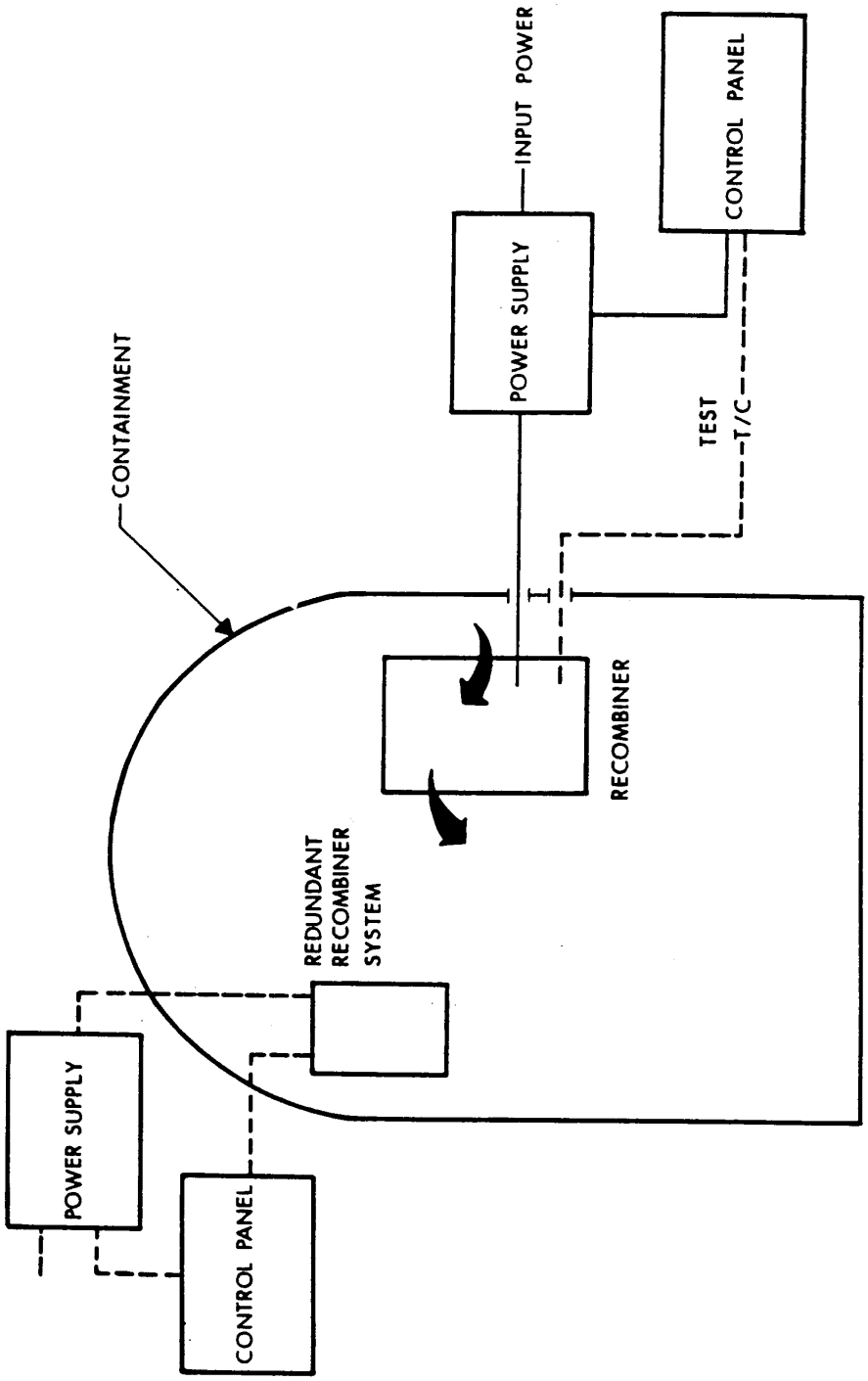

SEABROOK STATION UPDATED FINAL SAFETY ANALYSIS REPORT	Schematic Electric Recombiner System	
		Figure 6.2-95

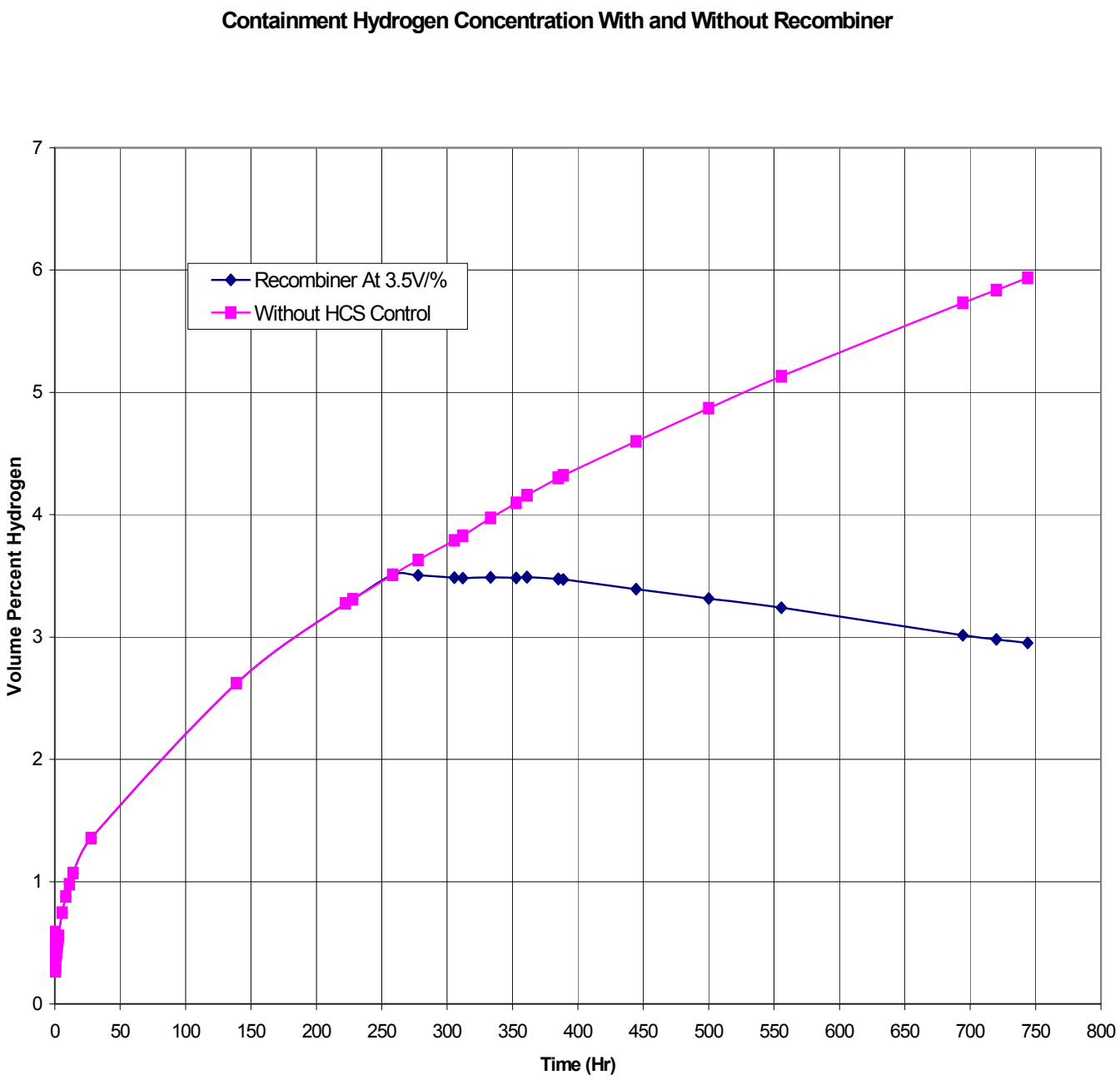

SEABROOK STATION UPDATED FINAL SAFETY ANALYSIS REPORT	Containment Hydrogen Concentration with and without Recombiner	
		Figure 6.2-96

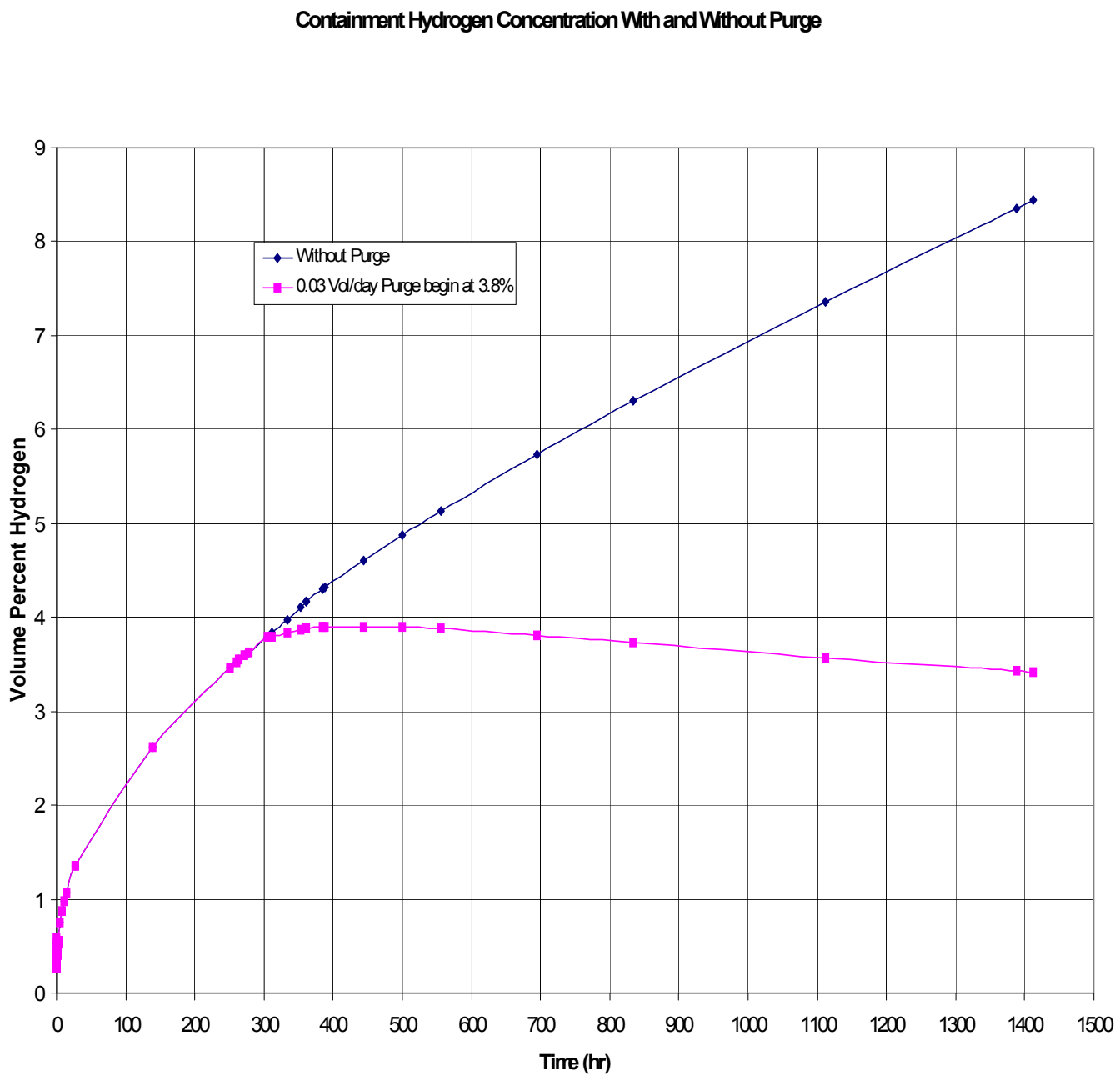

SEABROOK STATION UPDATED FINAL SAFETY ANALYSIS REPORT	Containment Hydrogen Concentration with and without Purging	
		Figure 6.2-97

See PID-1-SI-B-20445

See PID-1-SI-B-20448

See PID-1-SI-B-20449

See PID-1-SI-B20450

SEABROOK STATION UPDATED FINAL SAFETY ANALYSIS REPORT	Safety Injection System Low Head Injection Accumulators Detail	
		Figure 6.3-3

See PID-1-SI-B20446

SEABROOK STATION UPDATED FINAL SAFETY ANALYSIS REPORT	Safety Injection System Intermediate Head Injection System Detail	
		Figure 6.3-4

See PID-1-SI-B20447

SEABROOK STATION UPDATED FINAL SAFETY ANALYSIS REPORT	Safety Injection System High Head Injection System Detail	
		Figure 6.3-5

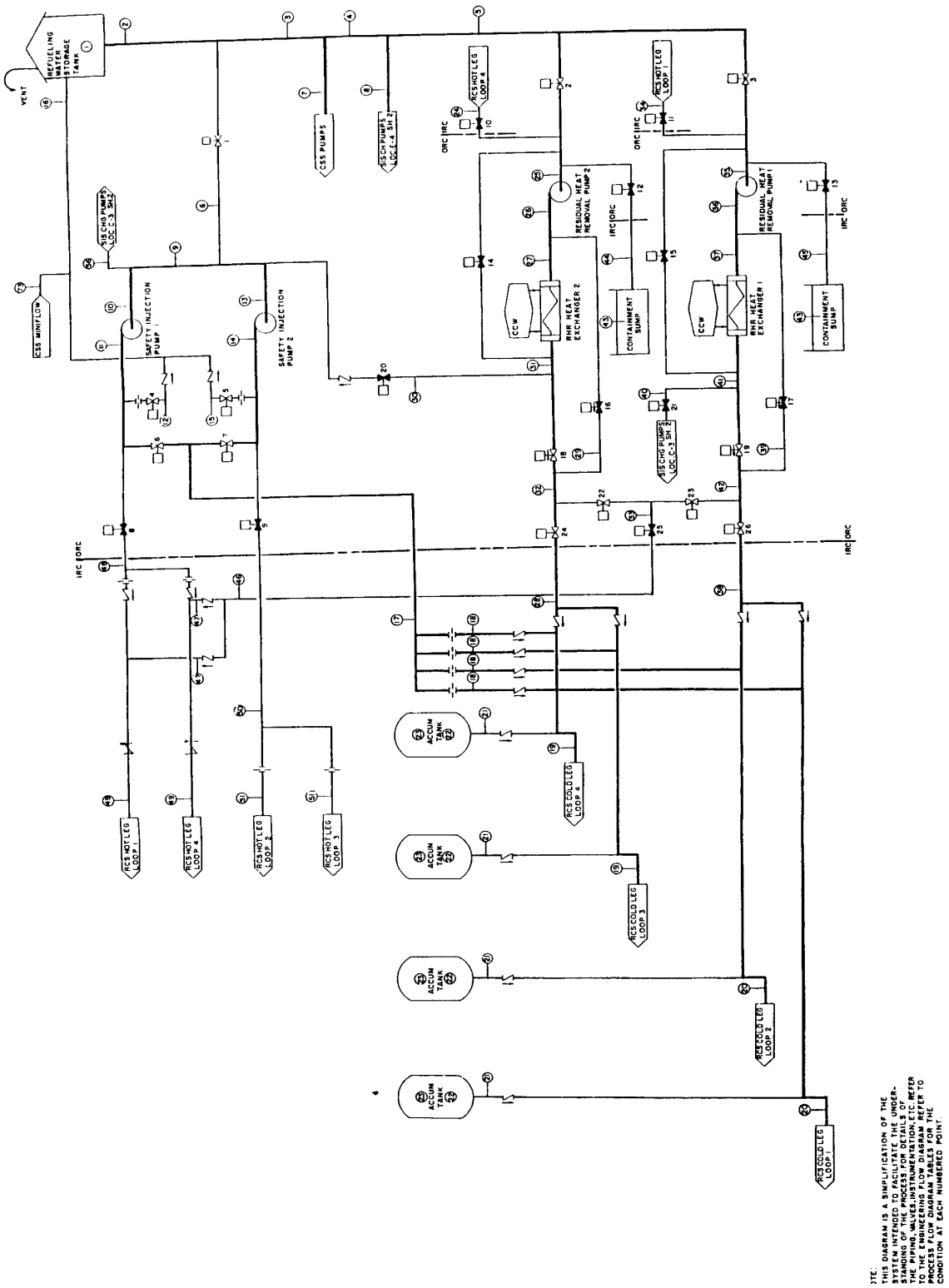

NOTE:
THIS DIAGRAM IS A SIMPLIFICATION OF THE SYSTEM INTENDED TO FACILITATE THE UNDERSTANDING OF PROCESS FLOW. DETAILS SUCH AS THE PIPING, VALVES, INSTRUMENTATION, ETC. REFER TO THE ENGINEERING FLOW DIAGRAM. REFER TO PROCESS FLOW DIAGRAM TABLES FOR THE CONDITION AT EACH NUMBERED POINT.

SEABROOK STATION UPDATED FINAL SAFETY ANALYSIS REPORT	Residual Heat Removal System Process Flow Diagram	
	Rev. 14	Figure 6.3-6 Sh. 1 of 14

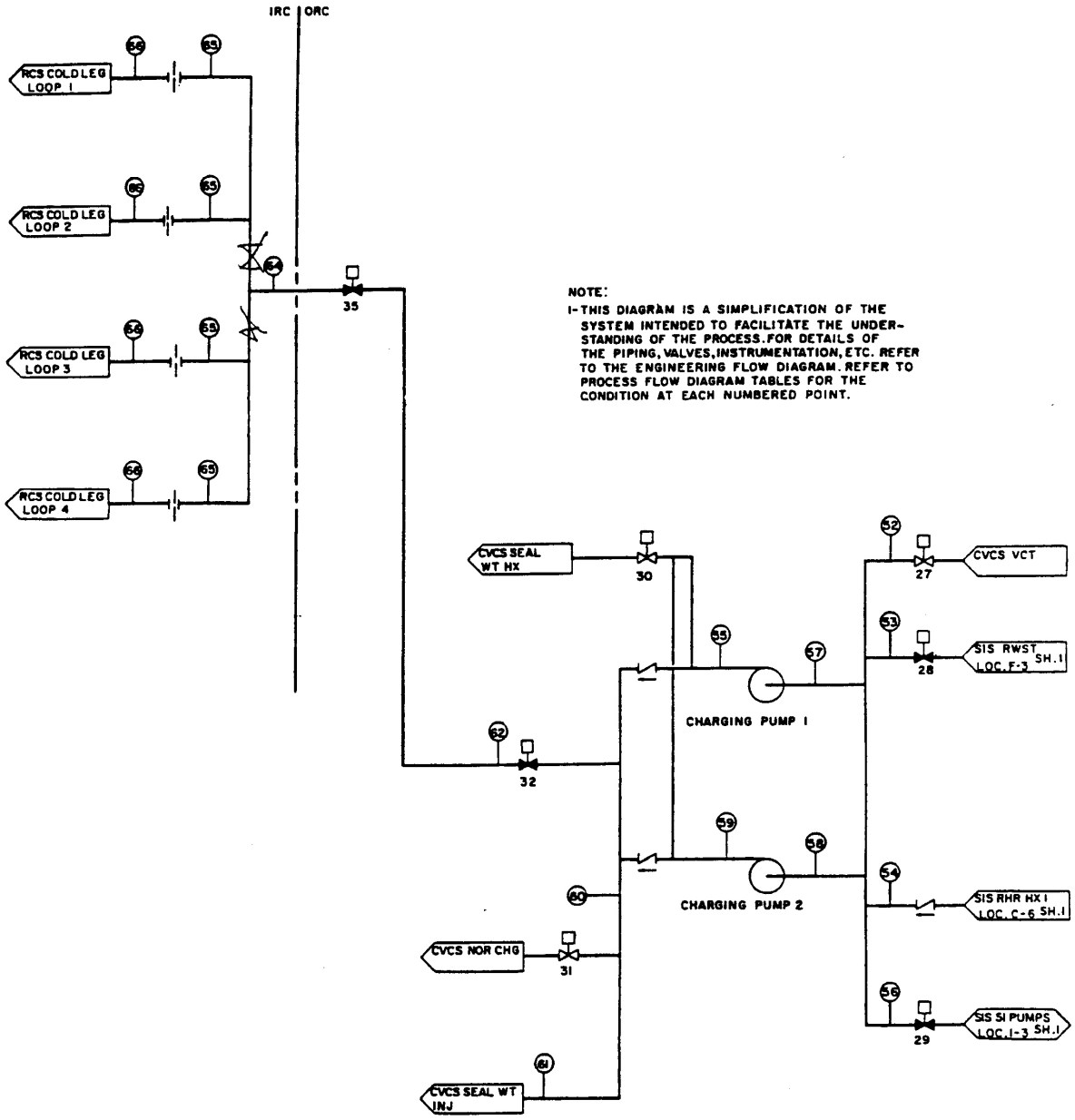

SEABROOK STATION UPDATED FINAL SAFETY ANALYSIS REPORT	Residual Heat Removal System Process Flow Diagram	
	Rev. 14	Figure 6.3-6 Sh. 2 of 14

MODES OF OPERATOR

MODE A - INJECTION

This mode presents the process conditions for the case of maximum safeguards, i.e., all pumps operating, following accumulator delivery. Two residual heat removal (RHR) pumps, two safety injection (SI) pumps, and two centrifugal charging (CC) pumps operate, taking suction from the refueling water storage tank and delivering to the reactor through the cold leg connections. Note that the flow from each pump is less than its maximum runout since the pump discharge piping is shared by the two pumps of each subsystem. Note also that the SI pump branch connections to the residual lines are close to their discharge into the accumulator lines, thereby minimizing any increase in the RHR branch line head loss due to the combined flows of the RHR and SI pumps.

MODE B - COLD-LEG RECIRCULATION

This mode presents the process conditions for the case of cold-leg recirculation assuming residual heat removal (RHR) pump No. 2 operating, safety injection pumps 1 and 2 operating, and centrifugal charging (CC) pumps 1 and 2 operating. It is assumed that the spray pumps have emptied the RWST at this time.

In this mode the safeguards pumps operate in series, with only the RHR pump capable of taking suction from the containment sump. The recirculated coolant is then delivered by the RHR pump to both of the SI pumps which deliver to the reactor through their cold-leg connections and to both of the CC pumps which deliver to the reactor through their cold-leg connections. The RHR pump also delivers flow directly to the reactor through two cold legs.

MODE C - HOT-LEG RECIRCULATION

This mode presents the process conditions for the case of hot-leg recirculation, assuming residual heat removal (RHR) pump No. 1 operating, centrifugal charging (CC) pumps 1 and 2 operating, and safety injection (SI) pumps 1 and 2 operating.

In this mode, the safeguards pumps again operate in series with only the RHR pump taking suction from the containment sump. The recirculated coolant is then delivered by the RHR pump to both of the CC pumps which continue to deliver to the reactor through their cold-leg connections and to both of the SI pumps which deliver to the reactor through their hot-leg connections. The RHR pump also delivers directly to the reactor through two hot-leg connections.

Valve Alignment Chart
Operational Modes

Valve	Injection (A)	Cold Leg Recirculation (B)	Hot Leg Recirculation (C)
1	O	C	C
2	O	C	C
3	O	C	C
4	O	C	C
5	O	C	C
6	O	O	C
7	O	O	C
8	C	C	O
9	C	C	O
10	C	C	C
11	C	C	C
12	C	O	O
13	C	O	O
14	C	C	C
15	C	C	C
16	C	C	C
17	C	C	C
18	O	O	O
19	O	O	O
20	C	O	O
21	C	O	O
22	O	O	O
23	O	O	O
24	O	O	C
25	C	C	O
26	O	C	C
27	C	C	C

O = Open
C = Closed

Valve Alignment Chart
Operational Modes

Valve	Injection (A)	Cold Leg Recirculation (B)	Hot Leg Recirculation (C)
28	O	C	C
29	C	O	O
30	C	C	C
31	C	C	C
35	O	O	O

Mode A – Injection Phase

(Runout Conditions Following Accumulator Delivery)

Location	Fluid	Pressure (psig)	Temperature (ºF)	Flow (gpm)*	Volume (gal)
1	Refueling Water	ATM Tank	100	-	450,000
2	Refueling Water	*	100	13,687	-
3	Refueling Water	13 Psia	100	12,839	-
4	Refueling Water	-	100	6,839	-
5	Refueling Water	-	100	6,000**	-
6	Refueling Water	11 Psia	100	848	-
7	Refueling Water	-	100	6,000	-
8	Refueling Water	>10 Psia	100	839	-
9	Refueling Water	>10 Psia	100	424	-
10	Refueling Water	10 Psia	100	424	-
11	Refueling Water	1165	100	424	-
12	Refueling Water	<25	100	26	-
13	Refueling Water	10 Psia	100	424	-
14	Refueling Water	1165	100	424	-
15	Refueling Water	25	100	26	-
16	Refueling Water	-	100	52	-
17	Refueling Water	1050	100	796	-
18	Refueling Water	73	100	199	-
19	Refueling Water	-	100	1,699	-
20	Refueling Water	-	100	1,699	-
21	Nitrogen	0	100	0	-
22	Nitrogen	0	100	0	850
23	Nitrogen	0	100	0	500
24	Reactor	-	120	0	-
25	Refueling Water	0	100	3,000	-
26	Refueling Water	138	100	3,000	-
27	Refueling Water	-	100	3,000	-

* At reference conditions 100 ºF and 0 psig.

** Estimated spray pump flow. Actual runout flow is 3300 gpm per spray pump.

Mode A – Injection Phase

(Runout Conditions Following Accumulator Delivery)

Location	Fluid	Pressure (psig)	Temperature (ºF)	Flow (gpm)*	Volume (gal)
28	Refueling Water	47	100	3,000	-
29	Refueling Water	86	100	0	-
30	Refueling Water	-	100	0	-
31	Refueling Water	-	100	3,000	-
32	Refueling Water	86	100	3,000	-
33	Refueling Water	86	100	0	-
34	Reactor	-	120	0	-
35	Refueling Water	0	100	3,000	-
36	Refueling Water	138	100	3,000	-
37	Refueling Water	-	100	3,000	-
38	Refueling Water	47	100	3,000	-
39	Refueling Water	~86	100	0	-
40	Refueling Water	-	100	0	-
41	Refueling Water	-	100	3,000	-
42	Refueling Water	86	100	3,000	-
43	Recirc Coolant	Containment Pressure	120	0	-
44	Recirc Coolant	Containment Pressure	0	-	
45	Recirc Coolant	Containment Pressure	120	0	-
46	Refueling Water	Low	100	0	-
47	Refueling Water	Low	100	0	-
48	Refueling Water	Low	100	0	-
49	Refueling Water	Low	100	0	-
50	Refueling Water	Low	100	0	-
51	Refueling Water	Low	100	0	-
52	Refueling Water	Low	100	0	-
53	Refueling Water	>10 Psia	100	839	-
54	Refueling Water	-	100	0	-

Mode A – Injection Phase

(Runout Conditions Following Accumulator Delivery)

Location	Fluid	Pressure (psig)	Temperature (ºF)	Flow (gpm)*	Volume (gal)
55	Refueling Water	1519	100	419	-
56	Refueling Water	-	100	0	-
57	Refueling Water	10 Psia	100	419	-
58	Refueling Water	10 Psia	100	419	-
59	Refueling Water	1519	100	419	-
60	Refueling Water	1516	100	124	-
61	Refueling Water	1516	100	124	-
62	Refueling Water	1456	100	714	-
64	Refueling Water	1396	100	714	-
65	Refueling Water	1008	100	178.5	-
66	Refueling Water	388	100	178.5	-

Mode B - Cold-Leg Recirculation

(RHR Pump No. 2 Operating)

Location	Fluid	Pressure (psig)	Temperature (ºF)	Flow (gpm)*	Volume (gal)
1	Refueling Water	ATM Tank	100	-	-
2	Refueling Water	-	100	0	-
3	Refueling Water	-	100	0	-
4	Refueling Water	-	100	0	-
5	Refueling Water	-	100	0	-
6	Recirc Coolant	-	182	0	-
7	Refueling Water	-	100	0	-
8	Refueling Water	-	100	0	-
9	Recirc Coolant	~35	182	1,263	-
10	Recirc Coolant	~35	182	424	-
11	Recirc Coolant	~1165	182	424	-
12	Refueling Water	-	100	0	-
13	Recirc Coolant	~35	182	424	-
14	Recirc Coolant	~1165	182	424	-
15	Refueling Water	-	100	0	-
16	Refueling Water	-	100	0	-
17	Recirc Coolant	1050	182	848	-
18	Recirc Coolant	73	182	212	-
19	Recirc Coolant	-	182	1,618	-
20	Recirc Coolant	-	182	212	-
21	Nitrogen	0	Ambient	0	-
22	Nitrogen	0	Ambient	0	850**
23	Nitrogen	0	Ambient	0	500
24	Recirc Coolant	-	212	0	-
25	Recirc Coolant	~12	212	4,500	-
26	Recirc Coolant	113	212	4,500	-
27	Recirc Coolant	-	212	4,500	-

* At reference conditions 212 ºF and 0 psig.

** Minimum Water/Volume At Operating Conditions.

Mode B - Cold-Leg Recirculation

(RHR Pump No. 2 Operating)

Location	Fluid	Pressure (psig)	Temperature (ºF)	Flow (gpm)*	Volume (gal)
28	Recirc Coolant	29	182	2,813	-
29	Recirc Coolant	56	182	0	-
30	Recirc Coolant	60	182	1,687	-
31	Recirc Coolant	65	182	4,500	-
32	Recirc Coolant	55	182	2,813	-
33	Recirc Coolant	0	182	0	-
34	Recirc Coolant	-	212	0	-
35	Refueling Water	-	100	0	-
36	Refueling Water	-	100	0	-
37	Refueling Water	-	100	0	-
38	Refueling Water	-	100	0	-
39	Refueling Water	-	100	0	-
40	Refueling Water	-	100	0	-
41	Refueling Water	-	100	0	-
42	Refueling Water	-	100	0	-
43	Recirc Coolant	Containment Pressure	212	0	450,000
44	Recirc Coolant	Containment Pressure	212	4,500	-
45	Recirc Coolant	Containment Pressure	212	0	-
46	Refueling Water	Low	100	0	-
47	Refueling Water	Low	100	0	-
48	Refueling Water	Low	100	0	-
49	Refueling Water	Low	100	0	-
50	Refueling Water	Low	100	0	-
51	Refueling Water	Low	100	0	-
52	Recirc Coolant	-	182	0	-
53	Recirc Coolant	-	182	0	-
54	Recirc Coolant	-	182	0	-

Mode B - Cold-Leg Recirculation

(RHR Pump No. 2 Operating)

Location	Fluid	Pressure (psig)	Temperature (ºF)	Flow (gpm)*	Volume (gal)
55	Recirc Coolant	~1519	182	~419	-
56	Recirc Coolant	>30	182	838	-
57	Recirc Coolant	~30	182	419	-
58	Recirc Coolant	~30	182	419	-
59	Recirc Coolant	~1519	182	~419	-
60	Recirc Coolant	1516	182	124	-
61	Recirc Coolant	1516	182	124	-
62	Recirc Coolant	1456	182	714	-
64	Recirc Coolant	1396	182	714	-
65	Recirc Coolant	1008	182	178.5	-
66	Recirc Coolant	388	182	178.5	-

Mode C - Hot-Leg Recirculation

(RHR Pump No. 1 Operating)

Location	Fluid	Pressure (psig)	Temperature (ºF)	Flow (gpm)*	Volume (gal)
1	Refueling Water	ATM Tank	100	-	-
2	Refueling Water	-	100	0	-
3	Refueling Water	-	100	0	-
4	Refueling Water	-	100	0	-
5	Refueling Water	-	100	0	-
6	Recirc Coolant	-	182	0	-
7	Refueling Water	-	100	0	-
8	Refueling Water	-	100	0	-
9	Recirc Coolant	~25	182	650	-
10	Recirc Coolant	~25	182	650	-
11	Recirc Coolant	~715	182	650	-
12	Refueling Water	-	100	0	-
13	Recirc Coolant	~25	182	650	-
14	Recirc Coolant	~715	182	650	-
15	Refueling Water	-	1000	-	
16	Refueling Water	-	100	0	-
17	Recirc Coolant	0	182	0	-
18	Recirc Coolant	-	182	0	-
19	Recirc Coolant	-	182	0	-
20	Recirc Coolant	-	182	0	-
21	Nitrogen	-	Ambient	0	-
22	Nitrogen	0	Ambient	0	850**
23	Nitrogen	0	Ambient	0	500
24	Recirc Coolant	-	212	0	-
25	Recirc Coolant	-	<212	0	-
26	Recirc Coolant	-	<212	0	-
27	Recirc Coolant	-	<212	0	-

* At reference conditions 212 ºF and 0 psig.

** Minimum water volume at operating conditions.

Mode C - Hot-Leg Recirculation

(RHR Pump No. 1 Operating)

Location	Fluid	Pressure (psig)	Temperature (ºF)	Flow (gpm)*	Volume (gal)
28	Recirc Coolant	-	<182	0	-
29	Recirc Coolant	-	<182	0	-
30	Recirc Coolant	-	<182	0	-
31	Recirc Coolant	-	<182	0	-
32	Recirc Coolant	-	<182	0	-
33	Recirc Coolant	50	182	2,362	-
34	Recirc Coolant	-	212	0	-
35	Recirc Coolant	~12	212	4,500	-
36	Recirc Coolant	113	212	4,500	-
37	Recirc Coolant	-	212	4,500	-
38	Recirc Coolant	-	<182	0	-
39	Recirc Coolant	55	182	0	-
40	Recirc Coolant	60	182	2,138	-
41	Recirc Coolant	65	182	4,500	-
42	Recirc Coolant	55	182	2,362	-
43	Recirc Coolant	Containment Pressure	212	-	-
44	Recirc Coolant	Containment Pressure	212	0	-
45	Recirc Coolant	Containment Pressure	212	4,500	-
46	Recirc Coolant	7	182	2,362	-
47	Recirc Coolant	5	182	1,181	-
48	Recirc Coolant	645	182	650	-
49	Recirc Coolant	-	182	1,506	-
50	Recirc Coolant	645	182	650	-
51	Recirc Coolant	-	182	325	-
52	Recirc Coolant	-	182	0	-
53	Recirc Coolant	-	182	0	-
54	Recirc Coolant	-	182	2,138	-

Mode C - Hot-Leg Recirculation

(RHR Pump No. 1 Operating)

Location	Fluid	Pressure (psig)	Temperature (ºF)	Flow (gpm)*	Volume (gal)
55	Recirc Coolant	~1519	182	419	-
56	Recirc Coolant	<35	182	1,300	-
57	Recirc Coolant	~35	182	419	-
58	Recirc Coolant	35	182	419	-
59	Recirc Coolant	1519	182	419	-
60	Recirc Coolant	1516	182	124	-
61	Recirc Coolant	1516	182	124	-
62	Recirc Coolant	1456	182	714	-
64	Recirc Coolant	1396	182	714	-
65	Recirc Coolant	1008	182	178.5	-
66	Recirc Coolant	338	182	178.5	-

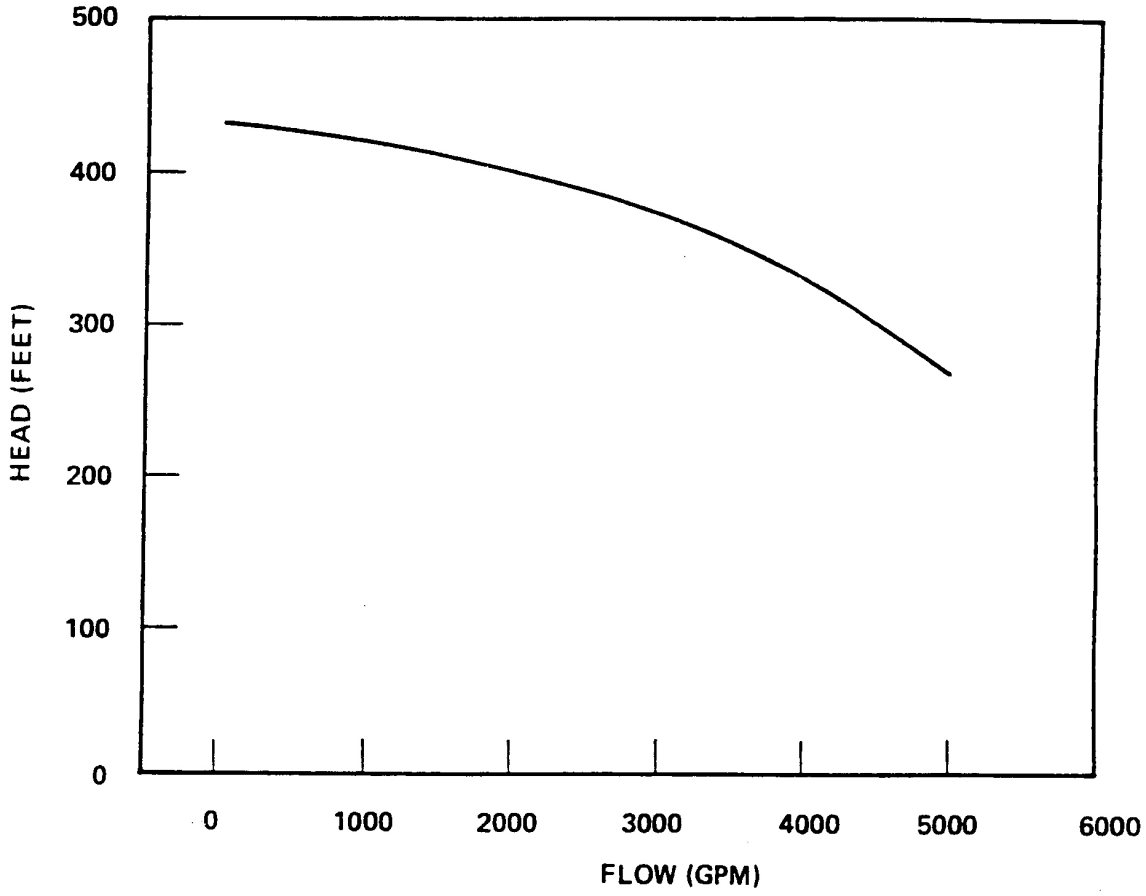

SEABROOK STATION UPDATED FINAL SAFETY ANALYSIS REPORT	Residual Heat Removal Pump Performance Curve	
		Figure 6.3-7

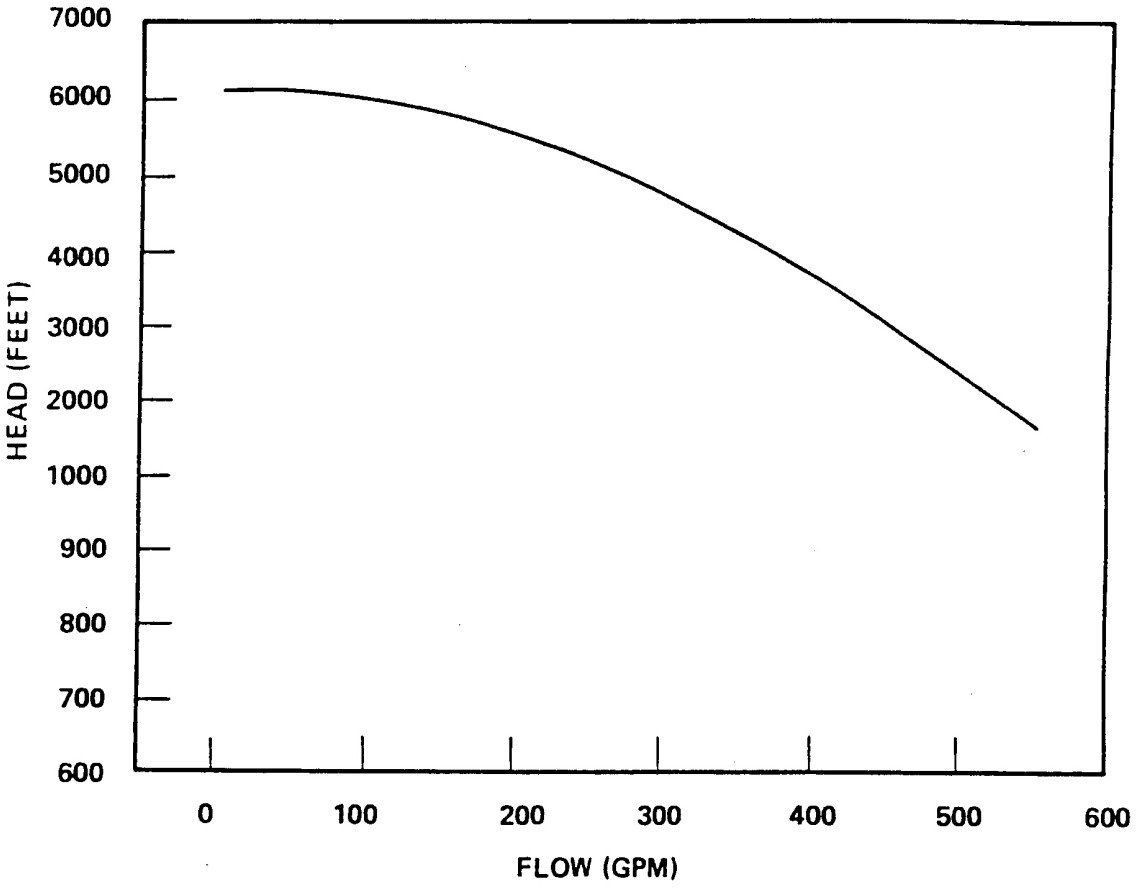

SEABROOK STATION UPDATED FINAL SAFETY ANALYSIS REPORT	Charging Pump Performance Curve	
		Figure 6.3-8

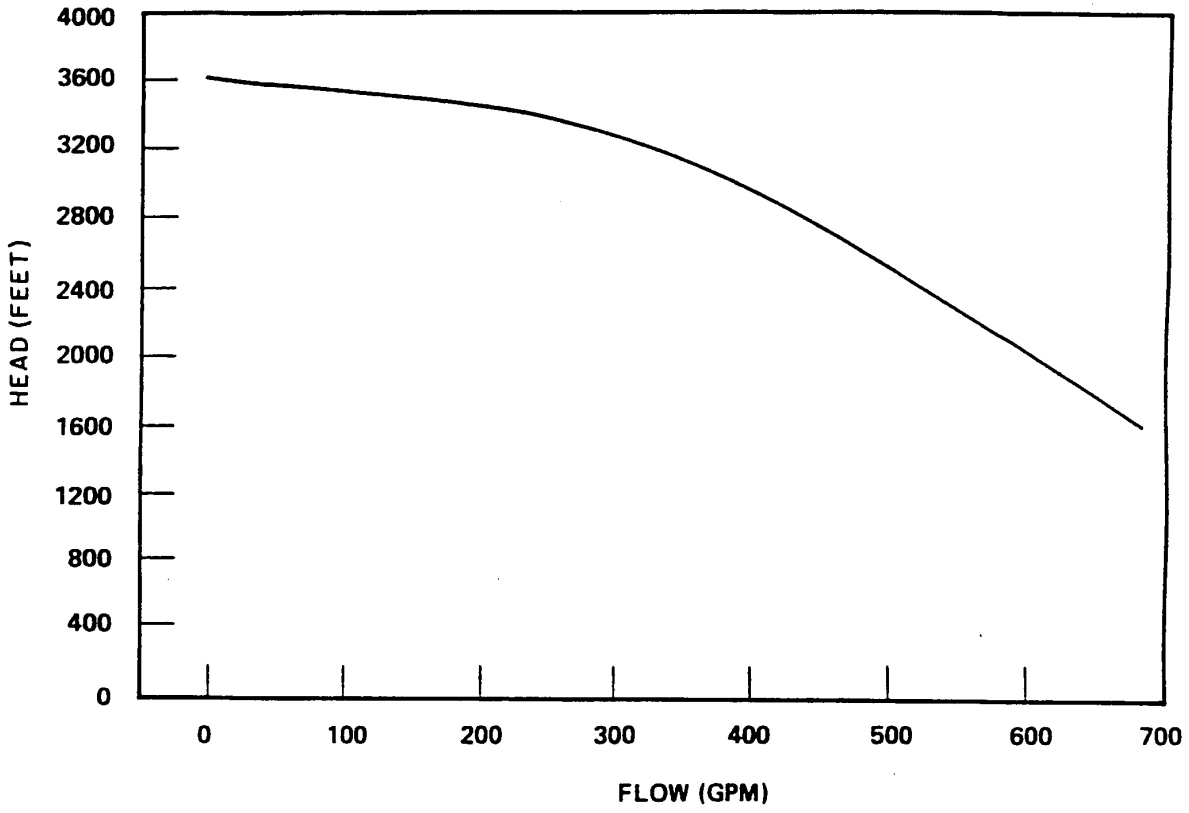

SEABROOK STATION UPDATED FINAL SAFETY ANALYSIS REPORT	Safety Injection Pump Performance Curve	
		Figure 6.3-9

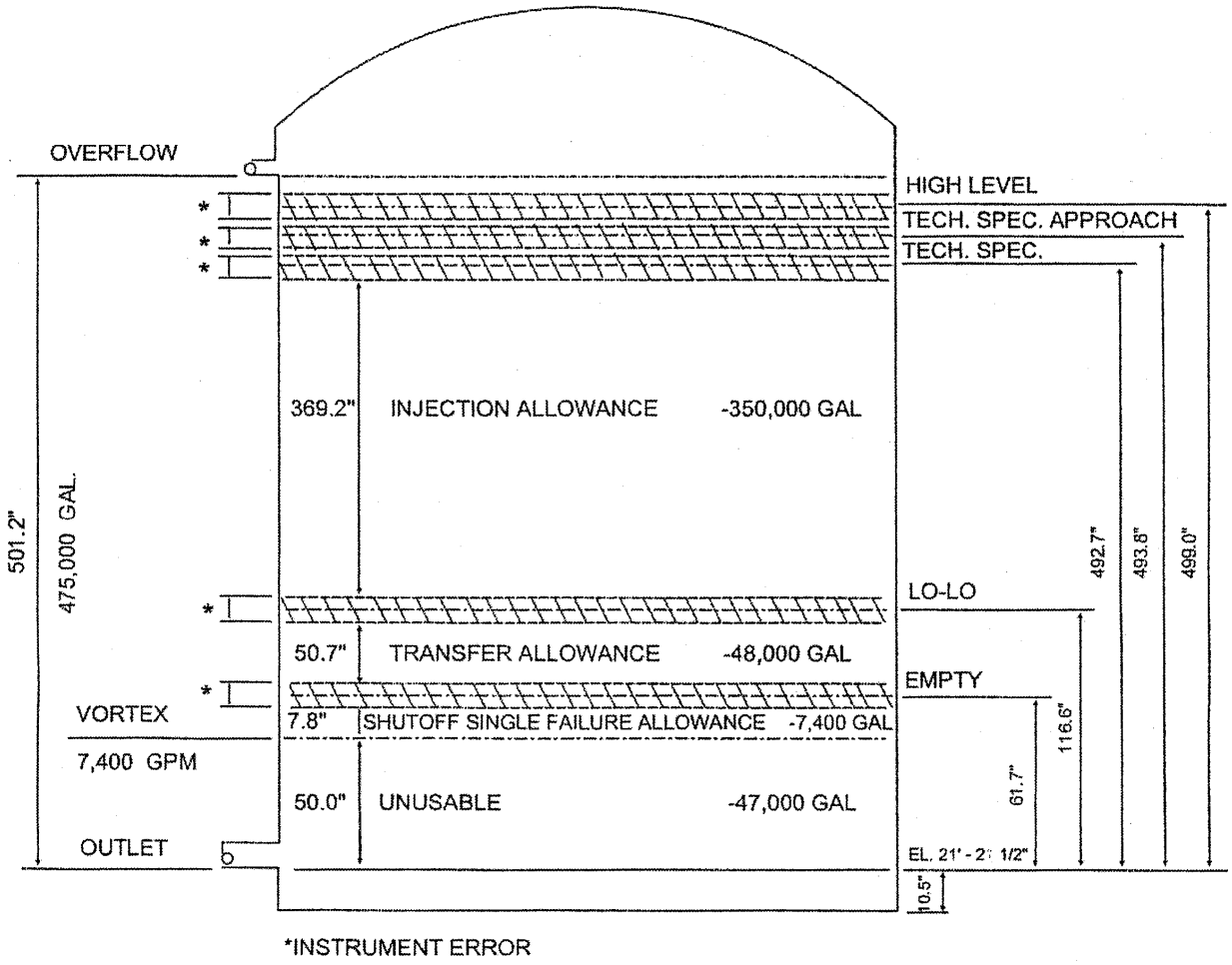

REFUELING WATER STORAGE TANK

SEABROOK STATION UPDATED FINAL SAFETY ANALYSIS REPORT	Refueling Water Storage Tank	
		Figure 6.3-10

REV. 01

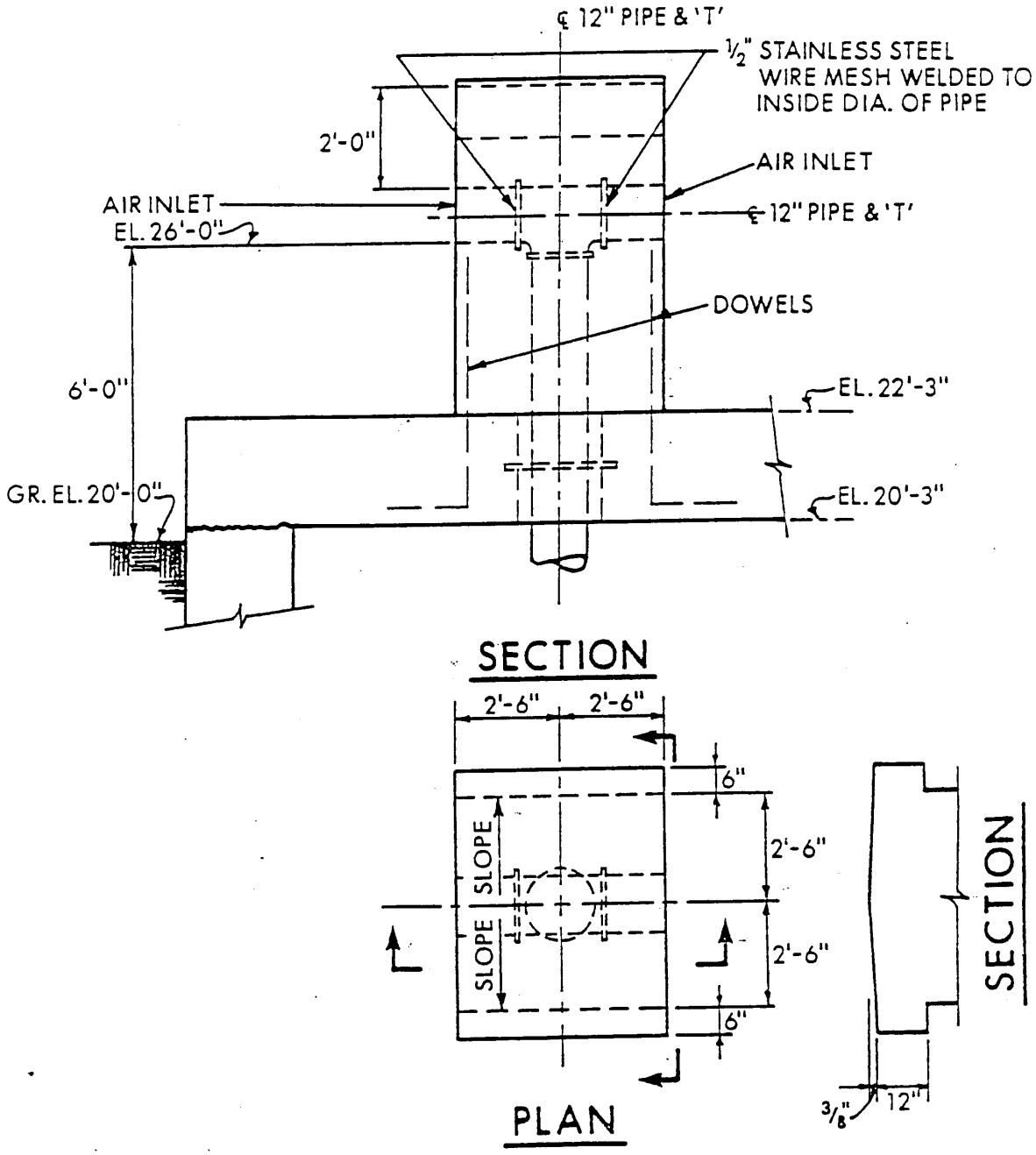

SEABROOK STATION UPDATED FINAL SAFETY ANALYSIS REPORT	East Makeup Air Intake Protection	
		Figure 6.4-1

REV.01

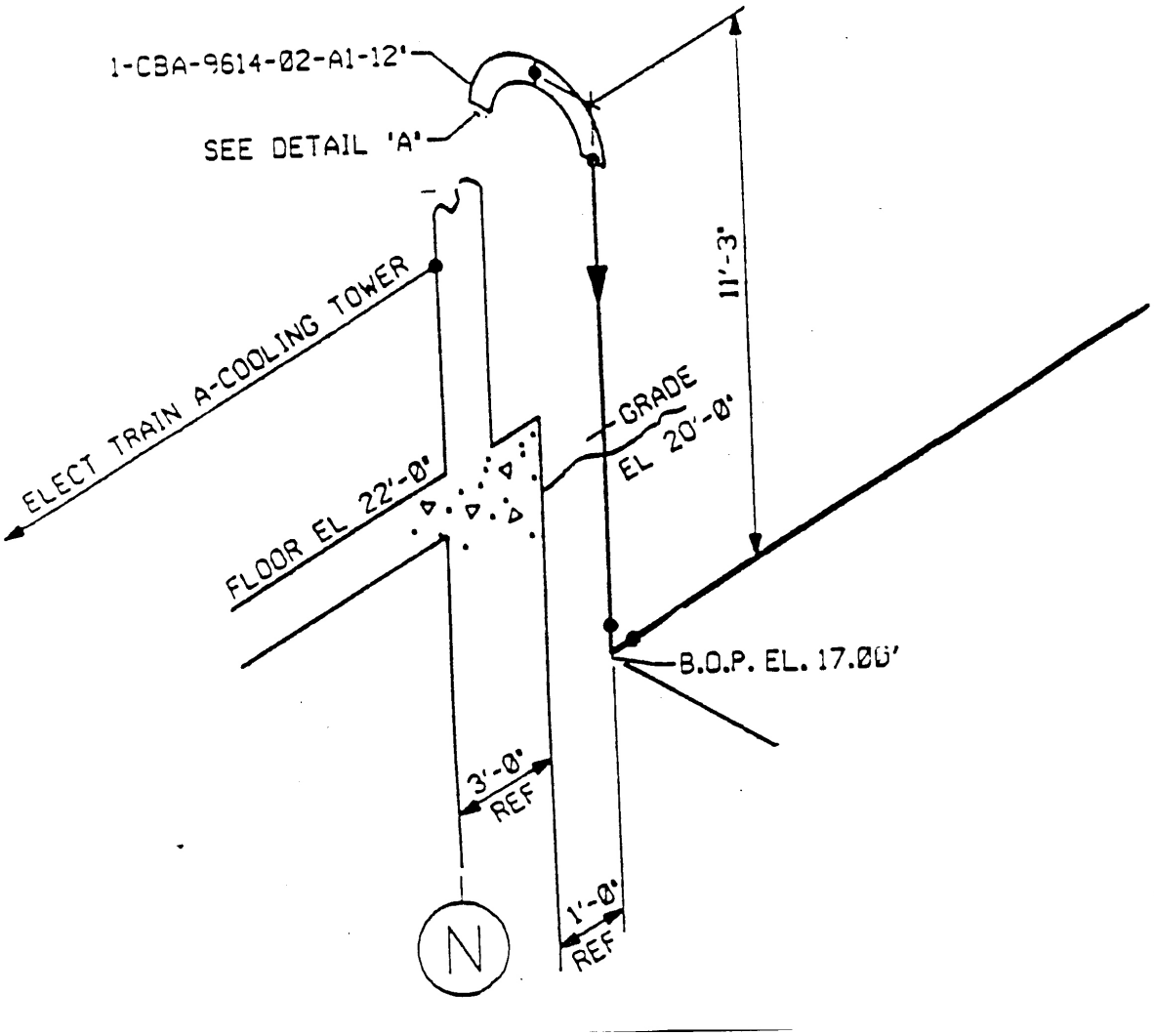

SEABROOK STATION UPDATED FINAL SAFETY ANALYSIS REPORT	West Makeup Air Intake [2 sheets]	
		Figure 6.4-2 sh 1 of 2

REV. 01

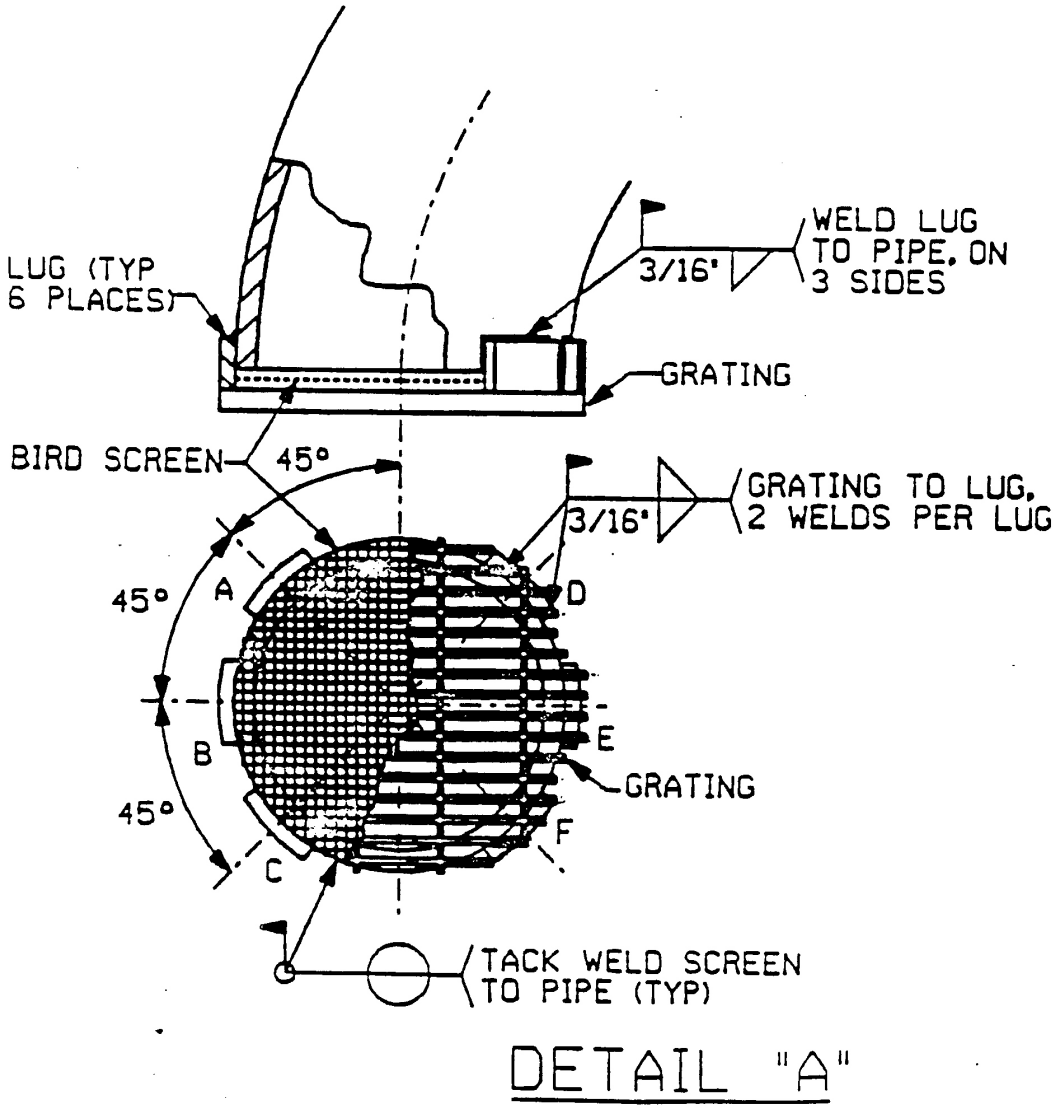

SEABROOK STATION UPDATED FINAL SAFETY ANALYSIS REPORT	West Makeup Air Intake [2 sheets]	
		Figure 6.4-2 sh 2 of 2

See PID-FW-B20685

See PID-FW-B20688

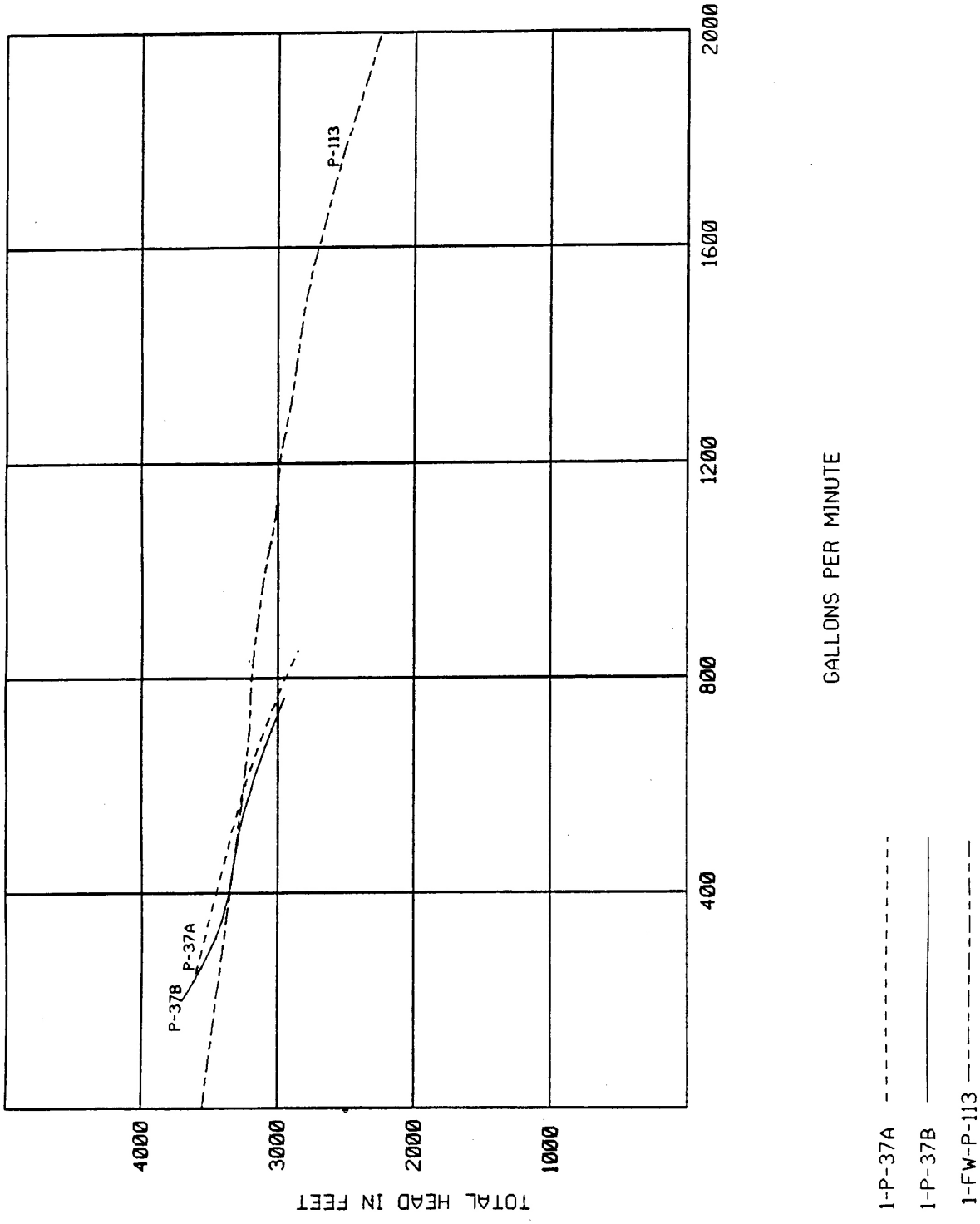

SEABROOK STATION UPDATED FINAL SAFETY ANALYSIS REPORT	Head and Capacity Curves for Emergency Feedwater Pumps and Startup Feedwater Pump	
		Figure 6.8-3