# APPENDIX C

## LOAD CELL CALIBRATION AND ORIGINAL DATA

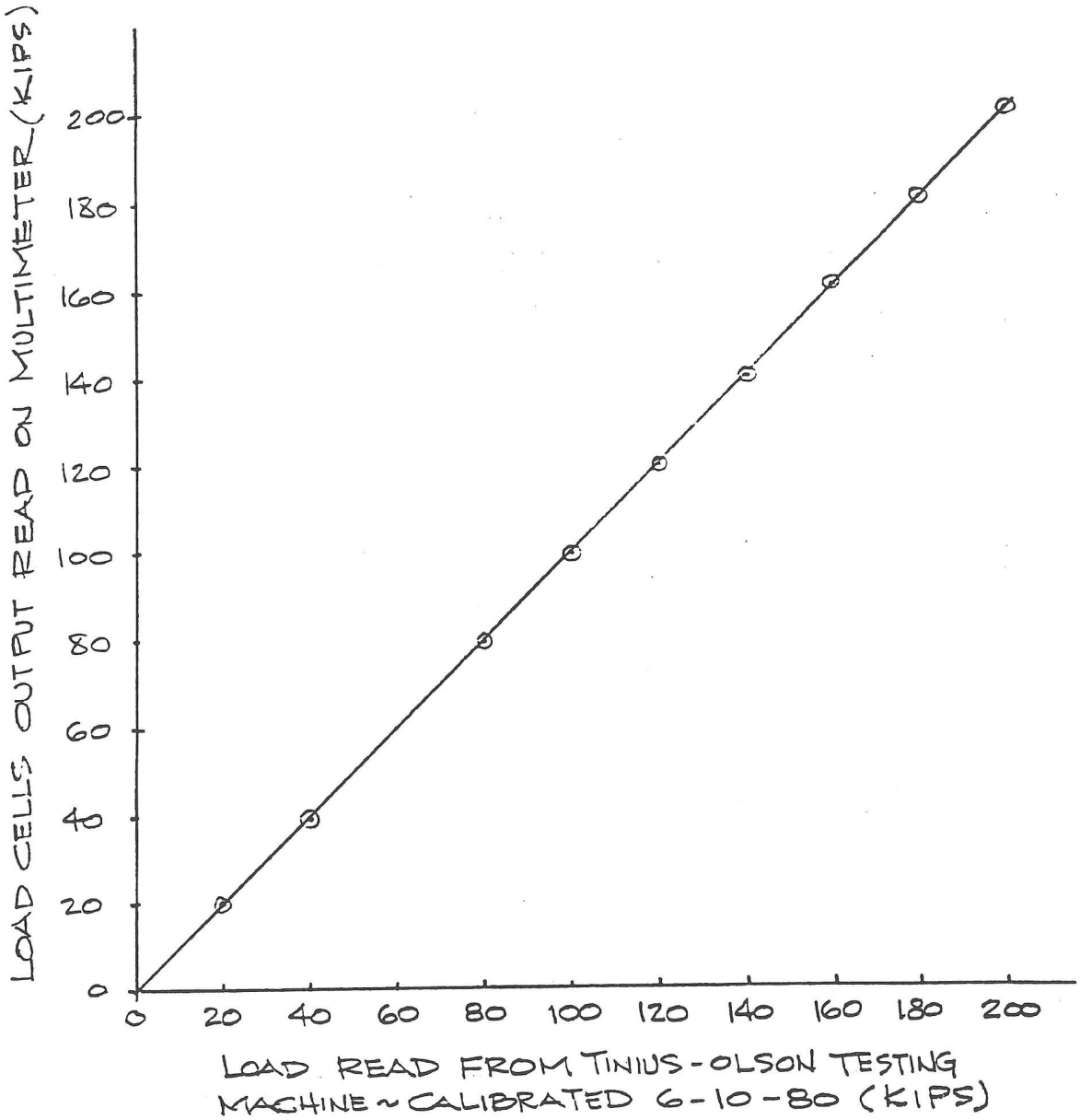


CALIBRATION CURVE FOR LOAD CELLS

# UNITED ENGINEERS CONTAINMENT LINER ANCHOR LOAD TEST



TEST SPECIMEN: SEABROOK T1
PEAK LOAD: 152 KIPS
f'c: 5,660 PSI (AVG. OF 3)
DIAL # 1 LOCATION: ON LINER PLATE TO VERIFY HORIZONAL DEFLECTION
DIAL # 2 LOCATION: ON CENTER OF BACK FACE OF BLOCK TO INDICATE BLOCK MOVEMENT
VISHAY-ELLIS CALIBRATION #: 290

DATE: 10-16-80
WITNESSES: STETHEN, HALEY, COPLEY, BURDETTE, LONG, GALLINI, GRUSETSKIE, KALAWADIA

| MULTI-METER READING (VOLTS) | LVDT DEFL (IN) | LOAD (KIPS) | DIAL#1 (IN) x10³ | DIAL#2 (IN) x10³ |
|---|---|---|---|---|
| 0.00 | 0.000 | 0.0 | 0 | 0 |
| 0.31 | 0.016 | 84.5 | 12 | 6 |
| 0.50 | 0.025 | 105.3 | 24 | 13 |
| 0.75 | 0.038 | 122.2 | 39 | 21 |
| 1.00 | 0.050 | 137.3 | 52 | 27 |
| 1.25 | 0.063 | 145.3 | 69 | 32 |
| 1.50 | 0.075 | 144.5 | 80 | 34 |
| 1.75 | 0.088 | 78.8 | 98 | 32 |
| 2.00 | 0.100 | 45.9 | 119 | 32 |
| SHUT DOWN PUMP TO RESET LVDT | | | | |
| 1.21 | 0.061 | 0.0 | 67 | 30 |
| 1.75 | 0.088 | 28.1 | 98 | 32 |
| 2.00 | 0.100 | 36.5 | 115 | 32 |
| 2.25 | 0.113 | 38.7 | 131 | 32 |
| 2.50 | 0.125 | 38.6 | 146 | 32 |
| 2.75 | 0.138 | 38.9 | 160 | 32 |
| 3.00 | 0.150 | 38.7 | 173 | 32 |
| 3.25 | 0.163 | 36.4 | 189 | 32 |
| SHUT DOWN PUMP TO RESET LVDT | | | | |
| 1.88 | 0.094 | 0.0 | 107 | 32 |
| 3.25 | 0.163 | 29.2 | 179 | 32 |
| 3.50 | 0.175 | 32.2 | 190 | 32 |

COMMENTS:

UNITED ENGINEERS CONTAINMENT LINER ANCHOR LOAD TEST

2 OF 2

TEST SPECIMEN: SEABROOK T1
PEAK LOAD: 152 KIPS
f'c: PSI
DIAL # I LOCATION: ON LINER PLATE TO VERIFY HORIZONAL DEFLECTION
DIAL # 2 LOCATION: ON CENTER OF BLANK FACE OF BLOCK TO INDICATE BLOCK MOVEMENT
VISHAY-ELLIS CALIBRATION #: 290

DATE: 10-16-80
WITNESSES: STETHEN, HALEY, COPLEY, BURDETTE, LONG, GALUNIC, GRUSETSKIE, KALAWADIA

| MULTI-METER READING (VOLTS) | LVDT DEFL (IN) | LOAD (KIPS) | DIAL#I (IN) x10³ | DIAL#2 (IN) x10³ |
|---|---|---|---|---|
| 3.75 | 0.188 | 35.2 | 204 | 32 |
| 4.00 | 0.200 | 35.4 | 222 | 32 |
| 4.25 | 0.213 | 35.8 | 237 | 32 |
| 4.50 | 0.225 | 35.1 | 248 | 33 |
| 4.75 | 0.238 | 35.0 | 263 | 33 |
| 5.00 | 0.250 | 35.4 | 275 | 33 |
| 5.25 | 0.263 | 34.2 | 289 | 33 |
| SHUT DOWN PUMP TO DISCONNECT LVDT & DIAL #1 | | | | |
| 2.73 | 0.137 | 0.00 | 145 | 33 |
| — | — | 28.4 | — | 33 |
| | | | | |
| | | | | |
| | | | | |
| | | | | |
| | | | | |
| | | | | |
| | | | | |
| | | | | |
| | | | | |
| | | | | |
| | | | | |

COMMENTS:

| | | |
|---|---|---|
| | 00 | 388 |
| | 00 | 392 |
| | 00 | 393 |
| | 00 | 397 |
| | 00 | 400 |
| | 00 | 398 |
| | 00 | 401 |
| | 00 | 386 |
| | 00 | 406 |
| | 00 | 393 |
| | 00 | 403 |
| | 00 | 385 |
| | 00 | 375 |
| | 00 | 345 |
| 1.80 | --- | --- |
| | 00 | 283 |
| | 00 | 250 |
| | 00 | 213 |
| | 00 | 172 |
| 1.30 | 00 | 111 |

RESET LVDT AT
HORIZONAL DEFL. OF 0.10"

| | | |
|---|---|---|
| | 00 | 450 |
| | 00 | 559 |
| | 00 | 752 |
| | 00 | 886 |
| | 00 | 1313 |
| | 00 | 1415 |
| | 00 | 1497 |
| | 00 | 1495 |
| | 00 | 1477 |
| | 00 | 1452 |
| | 00 | 1394 |
| | 00 | 1354 |
| | 00 | 1325 |
| | 00 | 1296 |
| | 00 | 1253 |
| | 00 | 1165 |
| | 00 | 1071 |
| | 00 | 985 |
| | 00 | 892 |
| | 00 | 723 |
| | 00 | 445 |
| BEGIN TEST | 00 | 000 |
| | CHANNEL | LOAD (KIPS) |

TEST 80-26
SEABROOK T1

| | | |
|---|---|---|
| | 00 | 284 |

DISCONNECT LVDT
AT HORIZONAL DEFL. OF
0.263"

| | | |
|---|---|---|
| | 00 | 355 |
| | 00 | 352 |
| | 00 | 354 |
| | 00 | 357 |
| | 00 | 355 |
| | 00 | 356 |
| | 00 | 359 |
| | 00 | 357 |
| | 00 | 356 |
| | 00 | 359 |
| | 00 | 360 |
| | 00 | 360 |
| | 00 | 353 |
| | 00 | 355 |
| | 00 | 358 |
| | 00 | 341 |
| | 00 | 341 |
| | 00 | 326 |
| | 00 | 313 |
| | 00 | 300 |
| | 00 | 285 |
| | 00 | 278 |
| | 00 | 262 |
| | 00 | 243 |
| | 00 | 230 |
| | 00 | 2 6 |
| | 00 | 190 |
| | 00 | 181 |
| | 00 | 167 |
| | 00 | 154 |
| | 00 | 140 |
| | 00 | 126 |
| | 00 | 102 |
| 1.90 | 00 | 049 |

RESET LVDT AT
HORIZONAL DEFL. OF 0.163"

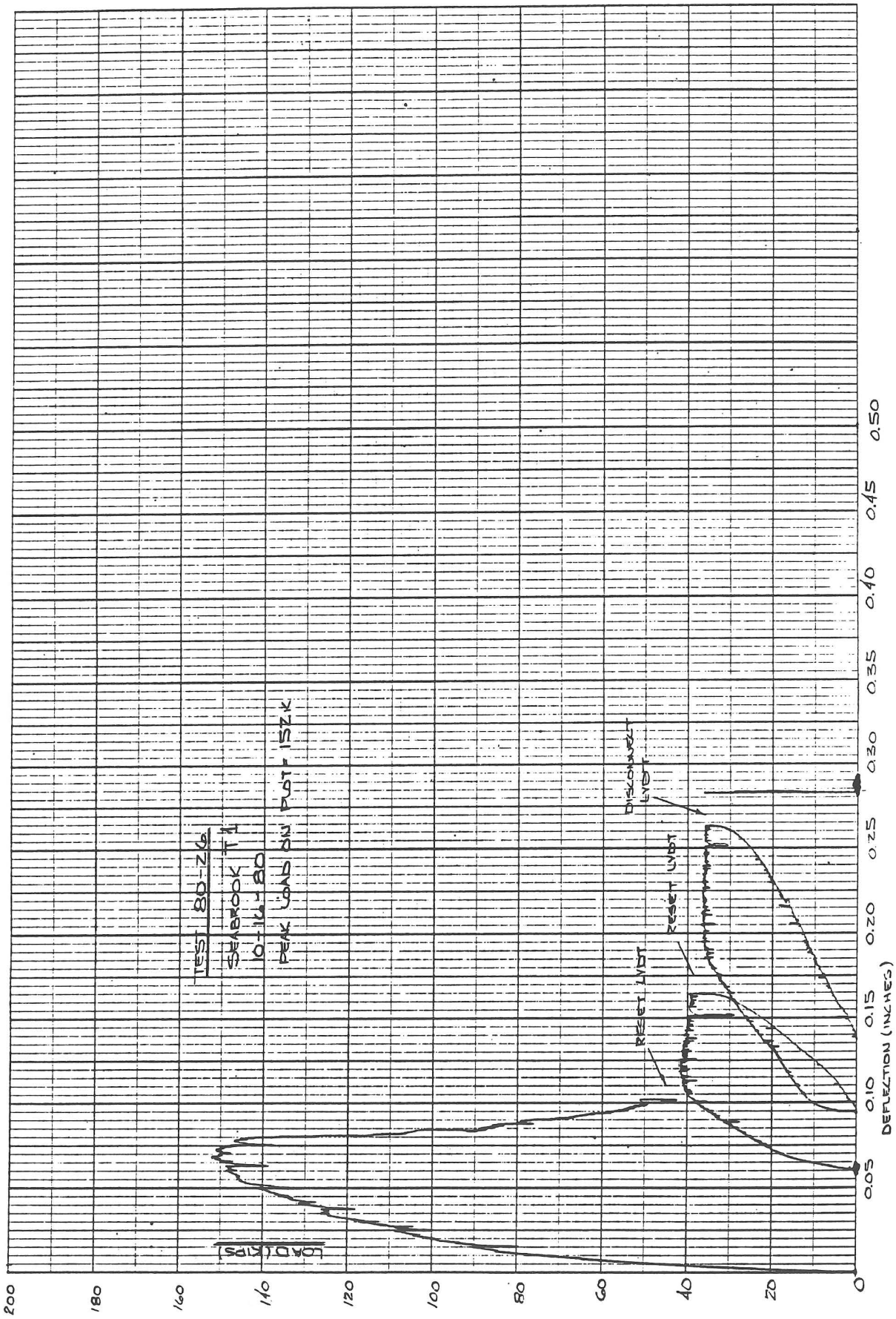
TEST 80-26
SEABROOK T1
10-14-80
PEAK LOAD ON PGT - 152K
LOAD (KIPS)
DEFLECTION (INCHES)
RESET LVDT
RESET LVDT
DISCONNECT LVDT
0
20
40
60
80
100
120
140
160
180
200
0.05
0.10
0.15
0.20
0.25
0.30
0.35
0.40
0.45
0.50

UNITED ENGINEERS CONTAINMENT LINER ANCHOR LOAD TEST



TEST SPECIMEN: SEABROOK T2
PEAK LOAD: 156 KIPS
f'c: PSI
DIAL # 1 LOCATION: SLIGHTLY ABOVE LVDT PROBE TO VERIFY HORIZONAL DEFLECTION
DIAL # 2 LOCATION: 7" FROM BACK FACE MOUNTED ON SIDE FACE TO INDICATE ROTATION
VISHAY-ELLIS CALIBRATION #: 290

DATE: 10-20-80
WITNESSES: STETHEN, HALEY, HAYES, COOLEY, BURDETTE AND HOLBROOK

TEST 80-26

| MULTI-METER READING (VOLTS) | LVDT DEFL (IN) | LOAD (KIPS) | DIAL#1 (IN) x10$^3$ | DIAL#2 (IN) x10$^3$ |
|---|---|---|---|---|
| 0.00 | 0.000 | 0.0 | 0 | 0 |
| 0.25 | 0.013 | 7.48 | 13 | 3 |
| 0.50 | 0.025 | 118.0 | 26 | 9 |
| 0.75 | 0.038 | 137.1 | 39 | 13 |
| 1.00 | 0.050 | 148.0 | 52 | 19 |
| 1.25 | 0.063 | 153.7 | 66 | 25 |
| 1.50 | 0.075 | 62.9 | 80 | 5 |
| 1.75 | 0.088 | 39.9 | 97 | 5 |
| 2.00 | 0.100 | 37.7 | 113 | 4 |
| 2.50 | 0.125 | 36.9 | 145 | 4 |
| 3.00 | 0.150 | 34.8 | 175 | 4 |
| 3.50 | 0.175 | 34.1 | 203 | 4 |
| 4.00 | 0.200 | 34.3 | 231 | 4 |
| 4.50 | 0.225 | 34.1 | 259 | 4 |
| 5.00 | 0.250 | 34.0 | 288 | 4 |
| 6.00 | 0.300 | 28.2 | 344 | 4 |
| 7.00 | 0.350 | 18.9 | 403 | 4 |
| 8.00 | 0.400 | 20.2 | 458 | 4 |
| 9.00 | 0.450 | 20.6 | 515 | 4 |
| 9.96 | 0.498 | 19.7 | 569 | 4 |
| 6.18 | 0.309 | 0.0 | 369 | 2 |

COMMENTS: PUMP SHUT DOWN TO DISCONNECT LVDT AND DIAL #1

| DEFL. (INCH) | CHANNEL | LOAD (KIPS) |
|---|---|---|
| | 00 | 341 |
| | 00 | 345 |
| | 00 | 346 |
| | 00 | 337 |
| | 00 | 345 |
| 0.20 | 00 | 343 |
| | 00 | 334 |
| | 00 | 343 |
| | 00 | 345 |
| | 00 | 348 |
| | 00 | 341 |
| | 00 | 352 |
| | 00 | 350 |
| | 00 | 349 |
| | 00 | 351 |
| 0.15 | 00 | 348 |
| | 00 | 359 |
| | 00 | 360 |
| | 00 | 358 |
| | 00 | 355 |
| | 00 | 369 |
| | 00 | 365 |
| | 00 | 369 |
| | 00 | 375 |
| | 00 | 352 |
| 0.10 | 00 | 378 |
| | 00 | 378 |
| | 00 | 398 |
| | 00 | 435 |
| | 00 | 517 |
| | 00 | 629 |
| | 00 | 1529 |
| | 00 | 1520 |
| | 00 | 1542 |
| | 00 | 1511 |
| 0.05 | 00 | 1475 |
| | 00 | 1443 |
| | 00 | 1377 |
| | 00 | 1339 |
| | 00 | 1252 |
| | 00 | 1180 |
| | 00 | 1050 |
| | 00 | 896 |
| | 00 | 683 |
| | 00 | 376 |
| 0.00 | 00 | 00 |

EST 80-26

SEABROOK TZ

PEAK LOAD ON PLOT=156K

PEAK LOAD ON TAPE=154.2K

10-20-80

| | | |
|---|---|---|
| 0.50 | 00 | 202 |
| | 00 | 212 |
| | 00 | 212 |
| | 00 | 213 |
| | 00 | 204 |
| | 00 | 210 |
| | 00 | 209 |
| | 00 | 211 |
| | 00 | 210 |
| | 00 | 213 |
| 0.45 | 00 | 206 |
| | 00 | 209 |
| | 00 | 211 |
| | 00 | 218 |
| | 00 | 209 |
| | 00 | 214 |
| | 00 | 203 |
| | 00 | 210 |
| | 00 | 209 |
| | 00 | 210 |
| 0.40 | 00 | 202 |
| | 00 | 206 |
| | 00 | 203 |
| | 00 | 202 |
| | 00 | 199 |
| | 00 | 199 |
| | 00 | 196 |
| | 00 | 195 |
| | 00 | 192 |
| | 00 | 189 |
| 0.35 | 00 | 189 |
| | 00 | 187 |
| | 00 | 188 |
| | 00 | 186 |
| | 00 | 191 |
| | 00 | 210 |
| | 00 | 213 |
| | 00 | 247 |
| | 00 | 263 |
| | 00 | 277 |
| 0.30 | 00 | 282 |
| | 00 | 288 |
| | 00 | 296 |
| | 00 | 296 |
| | 00 | 297 |
| | 00 | 302 |
| | 00 | 301 |
| | 00 | 304 |
| | 00 | 315 |
| | 00 | 337 |
| 0.25 | 00 | 340 |
| | 00 | 344 |
| | 00 | 347 |

END TEST

| | | |
|---|---|---|
| | 00 | 033 |
| | 00 | 006 |
| | 00 | 194 |
| | 00 | 217 |
| INTERMITTENT | 00 | 191 |
| LOAD READING | 00 | 181 |
| | 00 | 170 |
| | 00 | 161 |
| | 00 | 155 |
| | 00 | 119 |
| | 00 | 053 |

DISCONNECT LVDT & DIAL #1

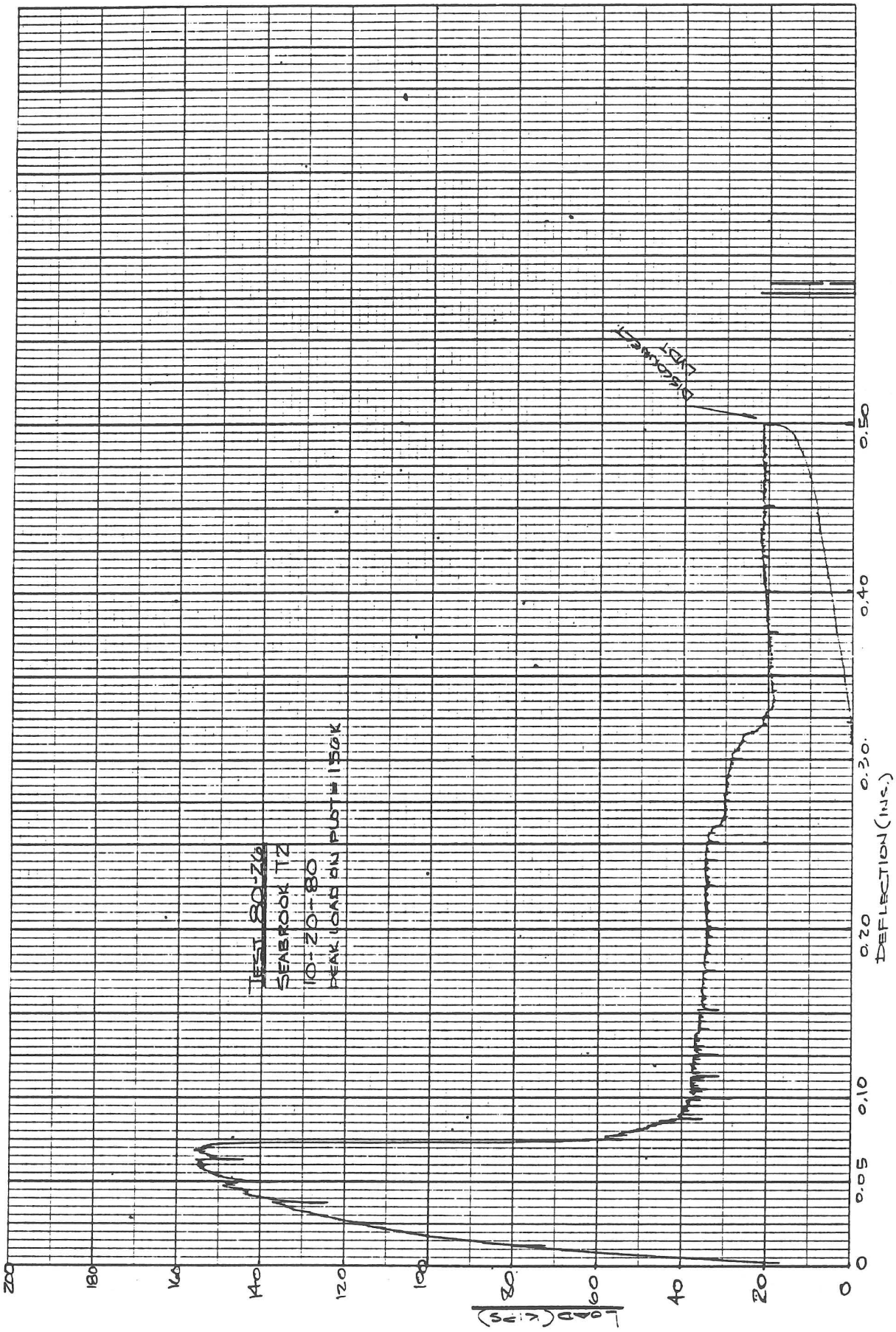
TEST 80-Z6
SEABROOK T2
10-20-80
PEAK LOAD ON PLOT = 150K
DISCONNECT
0
0.05
0.10
0.20
0.30
0.40
0.50
DEFLECTION (INS.)
0
20
40
60
80
100
120
140
160
180
200
LOAD (KIPS)

# UNITED ENGINEERS CONTAINMENT LINER ANCHOR LOAD TEST



TEST SPECIMEN: SEABROOK T3
PEAK LOAD: 144 KIPS
f'c: PSI
DIAL # 1 LOCATION: 1.5 IN. ABOVE LVDT PROBE TO VERIFY HORIZONAL DEFL 14" FROM T
DIAL # 2 LOCATION: 7" FROM BACK FACE MOUNTED ON SIDE FACE TO INDICATE ROTATION
VISHAY-ELLIS CALIBRATION #: 290

DATE: 10-24-80
WITNESSES: STETHEN, HAVEY HAYES, COBLEY, HOLBROOK, & BURDETTE

DIAL #3 LOCATION: 6 IN BEHIND T TO MEASURE PLATE LIFT-UP

TEST 80-26

| MULTI-METER READING (VOLTS) | LVDT DEFL (IN) | LOAD (KIPS) | DIAL#1 (IN) x10³ | DIAL#2 (IN) x10³ | DIAL#3 (IN) x10³ |
|---|---|---|---|---|---|
| 0.00 | 0.000 | 0.0 | 0 | 0 | 0 |
| 0.25 | 0.013 | 76.6 | 13 | 0 | 16 |
| 0.50 | 0.025 | 106.9 | 27 | 1 | 39 |
| 0.75 | 0.038 | 128.3 | 40 | 2 | 69 |
| 1.00 | 0.050 | 141.3 | 53 | 3 | 102 |
| 1.25 | 0.063 | 85.3 | 65 | 1 | 240 @ PEAK 290 ABRUPT 310 @ 1.25 |
| 1.50 | 0.075 | 67.0 | 82 | 0 | 297 |
| 1.75 | 0.088 | 35.0 | 92 | 0 | 428 |
| 2.00 | 0.100 | 39.7 | 105 | 0 | 505 |
| 2.50 | 0.125 | 39.4 | 133 | 0 | 629 |
| 3.00 | 0.150 | 39.0 | 160 | 0 | 745 |
| 3.50 | 0.175 | 38.6 | 186 | 0 | 855 |
| 4.00 | 0.200 | 38.2 | 213 | 0 | DISCONNECT — |
| 5.00 | 0.250 | 31.6 | 268 | 2 | — |
| 6.00 | 0.300 | 32.1 | 322 | 2 | — |
| 7.00 | 0.350 | 26.0 | 375 | 0 | — |
| 8.00 | 0.400 | 25.8 | 429 | 0 | — |
| 9.00 | 0.450 | 25.5 | 482 | 0 | — |
| 9.96 | 0.500 | 22.8 | 534 | 0 | — |
| 6.37 | 0.319 | 0.0 | 365 | 0 | — |

BURDETTE DOD ON PLATE

COMMENTS:

| | | |
|---|---|---|
| | 00 | 354 |
| | 00 | 357 |
| | 00 | 365 |
| | 00 | 375 |
| DISCONNECT DIAL# 3 | 00 | 381 |
| 0.20 | 00 | 382 |
| | 00 | 385 |
| | 00 | 387 |
| | 00 | 387 |
| | 00 | 388 |
| | 00 | 386 |
| | 00 | 386 |
| | 00 | 389 |
| | 00 | 391 |
| | 00 | 387 |
| 0.15 | 00 | 390 |
| | 00 | 394 |
| | 00 | 396 |
| | 00 | 397 |
| | 00 | 396 |
| | 00 | 394 |
| | 00 | 392 |
| | 00 | 387 |
| | 00 | 391 |
| | 00 | 397 |
| 0.101 | 00 | 392 |
| 0.10 | 00 | 397 |
| | 00 | 389 |
| | 00 | 370 |
| | 00 | 326 |
| | 00 | 257 |
| | 00 | 090 |
| | 00 | 751 |
| | 00 | 822 |
| | 00 | 1404 |
| | 00 | 1438 |
| 0.05 | 00 | 1413 |
| | 00 | 1372 |
| | 00 | 130 |
| | 00 | 1257 |
| | 00 | 1177 |
| | 00 | 1069 |
| | 00 | 973 |
| | 00 | 839 |
| | 00 | 692 |
| | 00 | 460 |
| 0.00 | 00 | 000 |
| DEFL. (INCH) | CHANNEL | LOAD (KIPS) |

TEST 80-26
SEABROOK T3
PEAK LOAD ON PLOT = 143K
PEAK LOAD ON TAPE = 143.8

| | | |
|---|---|---|
| 0.50 | 00 | 255 |
| | 00 | 250 |
| | 00 | 252 |
| | 00 | 252 |
| | 00 | 252 |
| | 00 | 253 |
| | 00 | 252 |
| | 00 | 255 |
| | 00 | 256 |
| | 00 | 254 |
| 0.45 | 00 | 255 |
| | 00 | 258 |
| | 00 | 261 |
| | 00 | 262 |
| | 00 | 262 |
| | 00 | 262 |
| | 00 | 256 |
| | 00 | 258 |
| | 00 | 257 |
| | 00 | 260 |
| 0.40 | 00 | 258 |
| | 00 | 263 |
| | 00 | 265 |
| | 00 | 269 |
| | 00 | 275 |
| | 00 | 272 |
| | 00 | 271 |
| | 00 | 270 |
| | 00 | 266 |
| | 00 | 272 |
| 0.35 | 00 | 260 |
| | 00 | 262 |
| | 00 | 262 |
| | 00 | 265 |
| | 00 | 270 |
| | 00 | 278 |
| | 00 | 278 |
| | 00 | 282 |
| | 00 | 286 |
| | 00 | 290 |
| 0.30 | 00 | 321 |
| | 00 | 331 |
| | 00 | 332 |
| | 00 | 333 |
| | 00 | 337 |
| | 00 | 335 |
| | 00 | 336 |
| | 00 | 337 |
| | 00 | 332 |
| | 00 | 330 |
| 0.25 | 00 | 316 |
| | 00 | 321 |
| | 00 | 324 |
| | 00 | 310 |

23.3

END TEST

| | | |
|---|---|---|
| | 00 | 000 |
| | 00 | 007 |
| | 00 | 046 |
| | 00 | 043 |
| | 00 | 016 |
| | 00 | 005 |
| | 00 | 128 |
| | 00 | 092 |
| | 00 | 142 |
| | 00 | 136 |
| | 00 | 127 |
| | 00 | 181 |
| INTERMITTENT LOAD READINGS | 00 | 166 |
| | 00 | 172 |
| | 00 | 158 |
| | 00 | 138 |
| | 00 | 112 |
| | 00 | 074 |
| | 00 | 249 |
| | 00 | 252 |
| | 00 | 238 |
| | 00 | 241 |
| | 00 | 235 |
| | 00 | 194 |
| | 00 | 140 |
| | 00 | 100 |
| | 00 | 065 |
| | 00 | 042 |
| | 00 | 023 |
| | 00 | 009 |

DISCONNECT LVDT

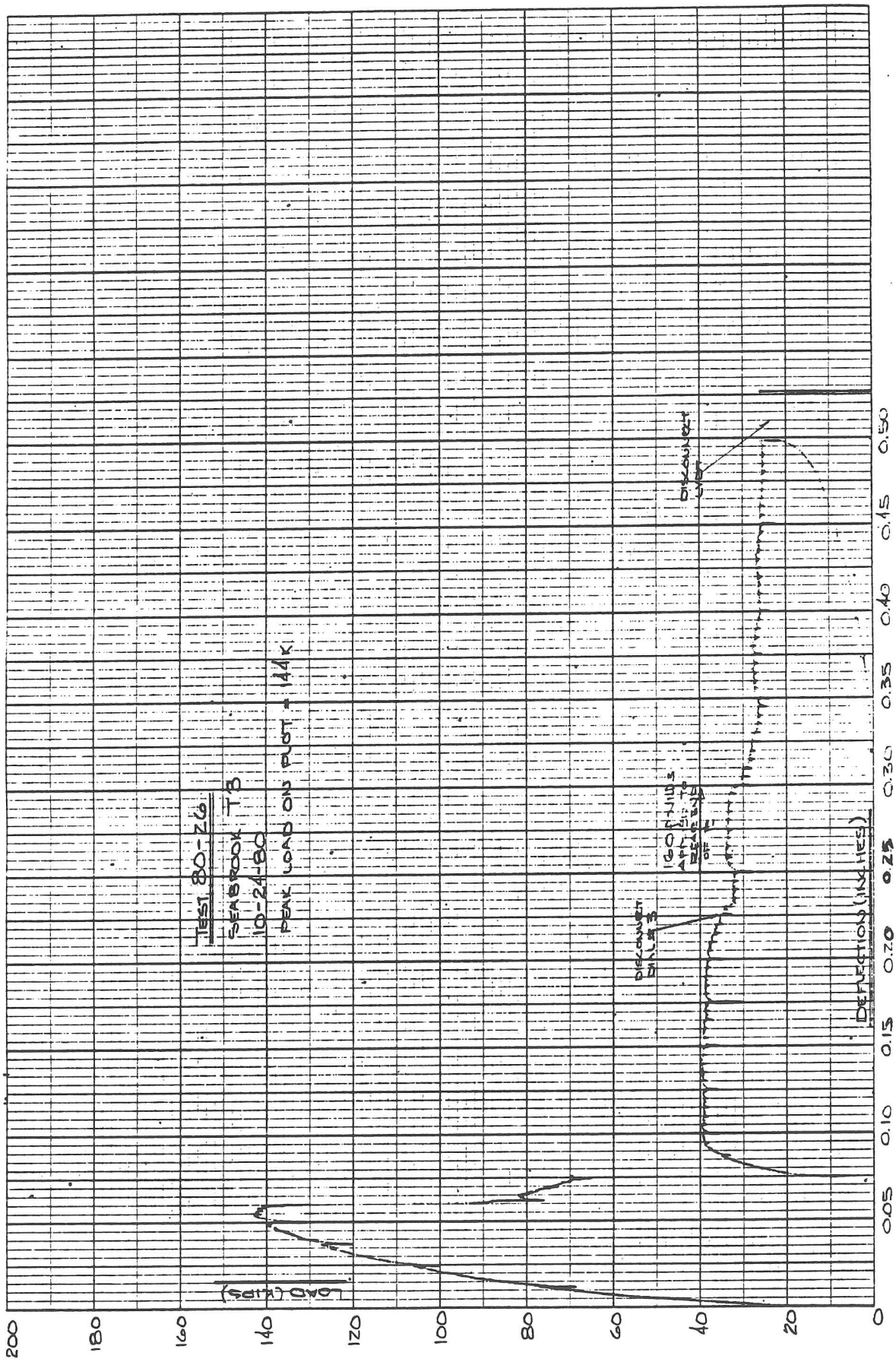
TEST 80-26
SEABROOK T-B
10-24-80
PEAK LOAD ON PLOT = 144K
LOAD (KIPS)
DEFLECTION (INCHES)
DECAMPED BALLS
DISCONNECT
0
20
40
60
80
100
120
140
160
180
200
0.05
0.10
0.15
0.20
0.25
0.30
0.35
0.40
0.45
0.50

# UNITED ENGINEERS CONTAINMENT LINER ANCHOR LOAD TEST



TEST SPECIMEN: STUDS 1
PEAK LOAD: 51 KIPS
f'c: PSI
DIAL # 1 LOCATION: 1.5 IN ABOVE LVDT PROBE TO VERIFY HORIZONAL DEFL. 14" FROM STUDS
DIAL # 2 LOCATION: 7" FROM BACK FACE MOUNTED ON SIDE FACE TO INDICATE ROTATION
VISHAY-ELLIS CALIBRATION #: 290

DATE: 11-7-80
WITNESSES: STETHEN, HOLBROOK, CANNON, BURDETTE, FUNK, PERRY

DIAL #3 LOCATION: 5 IN BEHIND STUDS TO MEASURE PLATE

TEST 80-26

| MULTI-METER READING (VOLTS) | LVDT DEFL (IN) | LOAD (KIPS) | DIAL#1 (IN) x10 3 | DIAL#2 (IN) x10 3 | DIAL#3 (IN) x10 3 |
|---|---|---|---|---|---|
| 0.00 | 0.000 | 0.0 | 0 | — | 0 |
| 0.25 | 0.013 | 15.5 | 12 | — | 8 |
| 0.50 | 0.025 | 28.7 | 24 | — | 18 |
| 0.75 | 0.038 | 36.3 | 37 | — | 28 |
| 1.00 | 0.050 | 39.4 | 50 | — | 36 |
| 1.25 | 0.063 | 41.2 | 63 | — | 43 |
| 1.50 | 0.075 | 42.4 | 76 | — | 49 |
| 1.75 | 0.088 | 43.0 | 90 | — | 53 |
| 2.00 | 0.100 | 43.7 | 104 | — | 58 |
| 2.50 | 0.125 | 44.0 | 129 | — | 65 |
| 3.00 | 0.150 | 44.9 | 155 | — | 72 |
| 4.00 | 0.200 | 46.3 | 207 | — | 84 |
| 5.00 | 0.250 | 46.9 | 258 | — | 92 |
| 6.00 | 0.300 | 49.1 | 310 | — | 100 |
| 7.00 | 0.350 | 50.0 | 362 | — | 103 |
| 8.00 | 0.400 | 0.0 | FAILURE OF 1 STUD (RIGHT STUD) | | ONLY |
| 9.00 | 0.450 | 26.2 | — | — | — |
| 9.95 | 0.500 | 24.0 | — | — | — |
| 9.59 | 0.480 | 0.0 | — | — | — |
| 1/2" MAXIMUM TRAVEL REACHED, LOAD REMAINING STUD TO FAILURE (SEE DIAGRAM) | | | | | |

COMMENTS:

| DEFL (IN) | CHANNEL | LOAD (KIPS) |
|---|---|---|
| | 00 | 465 |
| | 00 | 469 |
| | 00 | 469 |
| | 00 | 468 |
| 0.20 | 00 | 463 |
| | 00 | 465 |
| | 00 | 467 |
| | 00 | 460 |
| | 00 | 460 |
| | 00 | 456 |
| | 00 | 446 |
| | 00 | 451 |
| | 00 | 449 |
| | 00 | 453 |
| 0.15 | 00 | 449 |
| | 00 | 453 |
| | 00 | 447 |
| | 00 | 447 |
| | 00 | 446 |
| | 00 | 440 |
| | 00 | 442 |
| | 00 | 436 |
| | 00 | 441 |
| | 00 | 434 |
| 0.10 | 00 | 437 |
| | 00 | 435 |
| | 00 | 428 |
| | 00 | 430 |
| | 00 | 429 |
| | 00 | 424 |
| | 00 | 420 |
| | 00 | 416 |
| | 00 | 408 |
| | 00 | 400 |
| 0.05 | 00 | 388 |
| | 00 | 383 |
| | 00 | 368 |
| | 00 | 362 |
| | 00 | 318 |
| | 00 | 287 |
| | 00 | 196 |
| | 00 | 161 |
| | 00 | 143 |
| | 00 | 101 |
| 0.0 | 00 | 000 |

TEST 80-26
STUDS 1
PEAK LOAD ON PLOT = 51.5K
PEAK LOAD ON TAPE = 50.9K

| | | |
|---|---|---|
| | 00 | 262 |
| | 00 | 264 |
| 0.45 | 00 | 260 |
| | 00 | 262 |
| | 00 | 260 |
| | 00 | 256 |
| | 00 | 255 |
| | 00 | 251 |
| | 00 | 230 |
| | 00 | 193 |
| | 00 | 161 |
| | 00 | 108 |
| 0.40 | 00 | 052 |

RIGHT STUD FAILED
CONTINE LOADING

| | | |
|---|---|---|
| | 00 | 486 |
| | 00 | 504 |
| | 00 | 504 |
| | 00 | 506 |
| | 00 | 503 |
| | 00 | 509 |
| | 00 | 507 |
| | 00 | 502 |
| 0.35 | 00 | 500 |
| | 00 | 504 |
| | 00 | 500 |
| | 00 | 503 |
| | 00 | 498 |
| | 00 | 496 |
| | 00 | 493 |
| | 00 | 492 |
| | 00 | 487 |
| | 00 | 494 |
| 0.30 | 00 | 491 |
| | 00 | 485 |
| | 00 | 489 |
| | 00 | 489 |
| | 00 | 485 |
| | 00 | 484 |
| | 00 | 485 |
| | 00 | 483 |
| | 00 | 485 |
| | 00 | 483 |
| 0.25 | 00 | 469 |
| | 00 | 477 |
| | 00 | 475 |
| | 00 | 474 |

MAXIMUM TRAVEL OFF
1/2"

| | |
|---|---|
| 00 | 240 |
| 00 | 265 |
| 00 | 262 |
| 00 | 262 |
| 00 | 259 |
| 00 | 266 |
| 00 | 263 |

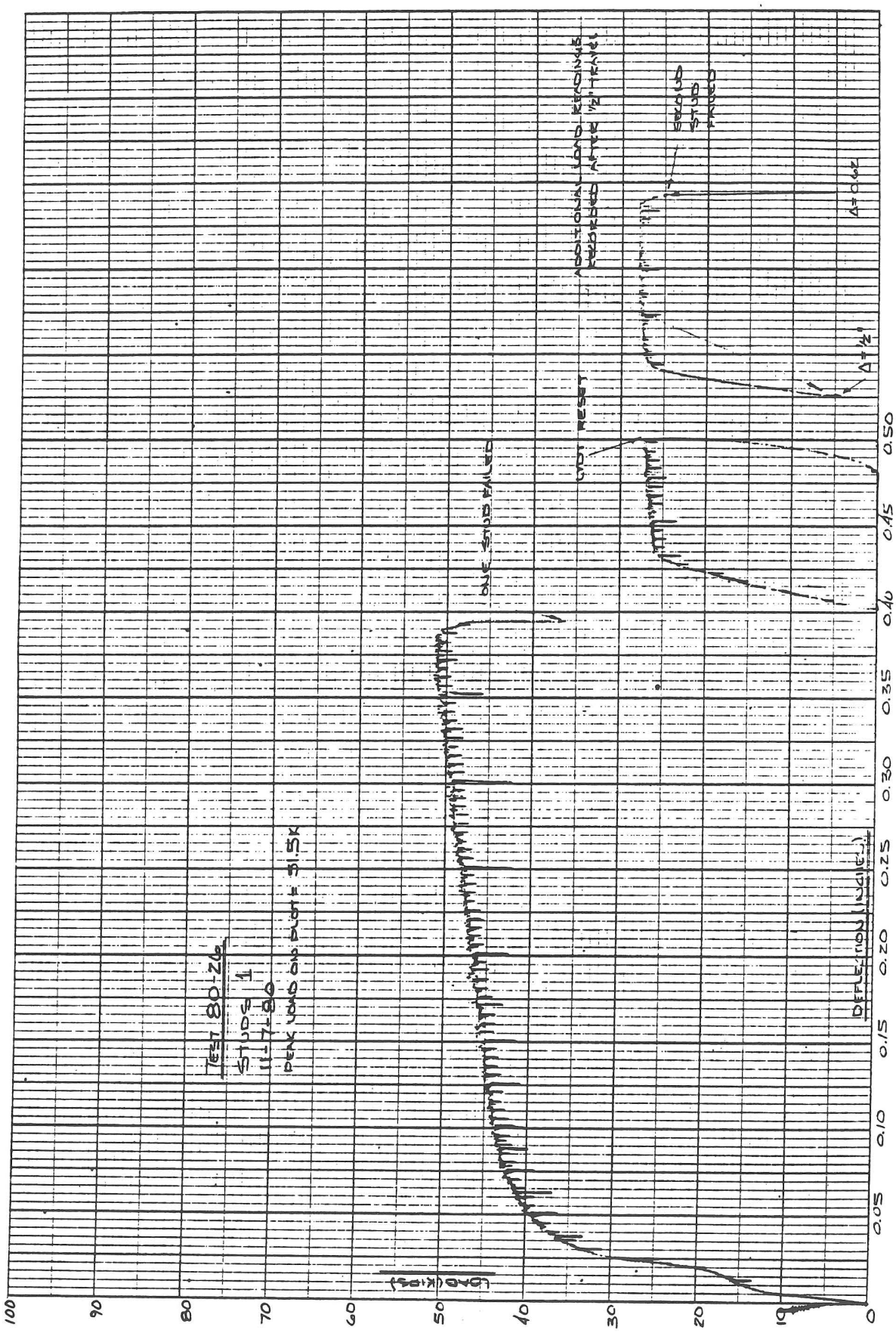
TEST 80-26
STUDS 1
11-7-80
PEAK LOAD ON PLOT = 51.5K
LOAD (KIPS)
DEFLECTION (INCHES)
ONE STUD FAILED
LVDT RESET
ADDITIONAL LOAD REQUIRED AFTER 1/2" TEARS
SECOND STUD FAILED
Δ=0.67
Δ=1/2"
0
10
20
30
40
50
60
70
80
90
100
0.05
0.10
0.15
0.20
0.25
0.30
0.35
0.40
0.45
0.50

# UNITED ENGINEERS CONTAINMENT LINER ANCHOR LOAD TEST



TEST SPECIMEN: STUDS 2
PEAK LOAD: 54.8 KIPS
f'c: PSI
DIAL # 1 LOCATION: 1.5 IN ABOVE LVDT PROBE TO VERIFY HORIZONTAL DEF. 14 IN FROM STUDS
DIAL # 2 LOCATION: 7 IN FROM BACK FACE MOUNTED ON SIDE FACE TO INDICATE ROTATION
VISHAY-ELLIS CALIBRATION #: 290

DATE: 11-21-80
WITNESSES: STETHEN, BURDETTE, P. HAYES, T. HAYES, FUNK, PERRY, COOLEY

DIAL #3 LOCATION: 3 IN BEHIND STUDS TO MEASURE PLATE UPLIFT

TEST 80-26

| MULTI-METER READING (VOLTS) | LVDT DEFL (IN) | LOAD (KIPS) | DIAL#1 (IN) x10 3 | DIAL#2 (IN) x10 3 | DIAL#3 (IN) x10 3 |
|---|---|---|---|---|---|
| 0.00 | 0.000 | 0.0 | 0 | 0 | 0 |
| 0.25 | 0.013 | 24.2 | 12 | 0 | 9 |
| 0.50 | 0.025 | 29.8 | 24 | 0 | 17 |
| 0.75 | 0.038 | 34.6 | 37 | 0 | 25 |
| 1.00 | 0.050 | 37.9 | 50 | 0 | 32 |
| 1.25 | 0.063 | 38.3 | 64 | 0 | 39 |
| 2.00 | 0.100 | 41.6 | 103 | 0 | 52 |
| 3.00 | 0.150 | 42.8 | 155 | 0 | 65 |
| 4.00 | 0.200 | 44.0 | 208 | 0 | 77 |
| 5.00 | 0.250 | 44.2 | 260 | 0 | 83 |
| 6.00 | 0.300 | 46.4 | 312 | 0 | 88 |
| 7.00 | 0.350 | 47.6 | 364 | 0 | 92 |
| 8.00 | 0.400 | 49.7 | 416 | 0 | 95 |
| 9.00 | 0.450 | 49.7 | 468 | 0 | 96 |
| 9.96 | 0.500 | 48.8 | 518 | 0 | 99 |
| 9.14 | 0.457 | 0.0 | — | — | — |
| RESET LVDT, CONTINUE TEST (SEE PLOT) | | | | | |
| | | | | | |
| | | | | | |
| | | | | | |

COMMENTS:

| | | |
|---|---|---|
| | 00 | 507 |
| | 00 | 507 |
| | 00 | 508 |
| | 00 | 502 |
| | 00 | 505 |
| | 00 | 502 |
| 0.45 | 00 | 497 |
| | 00 | 483 |
| | 00 | 493 |
| | 00 | 490 |
| | 00 | 493 |
| | 00 | 494 |
| | 00 | 497 |
| | 00 | 490 |
| | 00 | 494 |
| | 00 | 492 |
| 0.40 | 00 | 481 |
| | 00 | 490 |
| | 00 | 488 |
| | 00 | 485 |
| | 00 | 484 |
| | 00 | 481 |
| | 00 | 473 |
| | 00 | 481 |
| | 00 | 480 |
| | 00 | 476 |
| 0.35 | 00 | 476 |
| | 00 | 477 |
| | 00 | 474 |
| | 00 | 471 |
| | 00 | 470 |
| | 00 | 473 |
| | 00 | 467 |
| | 00 | 467 |
| | 00 | 484 |
| | 00 | 457 |
| 0.30 | 00 | 464 |
| | 00 | 459 |
| | 00 | 463 |
| | 00 | 461 |
| | 00 | 450 |
| | 00 | 456 |
| | 00 | 459 |
| | 00 | 454 |
| | 00 | 458 |
| | 00 | 453 |
| 0.25 | 00 | 43 |
| | 00 | 450 |
| | 00 | 452 |
| | 00 | 451 |
| | 00 | 450 |
| | 00 | 448 |
| | 00 | 446 |
| | 00 | 449 |
| | 00 | 433 |
| | 00 | 446 |
| 0.20 | 00 | 440 |
| | 00 | 441 |
| | 00 | 435 |
| | 00 | 442 |
| | 00 | 438 |
| | 00 | 435 |
| | 00 | 439 |
| | 00 | 438 |
| | 00 | 434 |
| | 00 | 432 |
| 0.15 | 00 | 428 |
| | 00 | 434 |
| | 00 | 429 |
| | 00 | 431 |
| | 00 | 428 |
| | 00 | 425 |
| | 00 | 426 |
| | 00 | 428 |
| | 00 | 419 |
| | 00 | 417 |
| 0.10 | 00 | 416 |
| | 00 | 415 |
| | 00 | 415 |
| | 00 | 407 |
| | 00 | 405 |
| | 00 | 401 |
| | 00 | 401 |
| | 00 | 397 |
| | 00 | 386 |
| | 00 | 383 |
| 0.05 | 00 | 379 |
| | 00 | 373 |
| | 00 | 359 |
| | 00 | 347 |
| | 00 | 323 |
| | 00 | 298 |
| | 00 | 301 |
| | 00 | 286 |
| | 00 | 240 |
| | 00 | 155 |
| 0.00 | 00 - | 000 |
| DEPL (IN) | CHANNEL | LOAD (KIP) |

TEST 80-26

PEAK LOAD ON PLOT = 54.8K

PEAK LOAD ON TAPE = 54.2K

11-21-80

| | | |
|---|---|---|
| | 00 | 033 |
| | 00 - | 001 |

ONE STUD FAILED, DISCONNECT PLOTTER & TAKE RANDOM LOAD READINGS OF FINAL STUD

| | | |
|---|---|---|
| 0.68 | 00 | 468 |
| | 00 | 496 |
| | 00 | 507 |
| | 00 | 511 |
| | 00 | 520 |
| | 00 | 521 |
| 0.65 | 00 | 528 |
| | 00 | 519 |
| | 00 | 531 |
| | 00 | 529 |
| | 00 | 538 |
| | 00 | 531 |
| | 00 | 542 |
| | 00 | 539 |
| | 00 | 540 |
| | 00 | 532 |
| 0.60 | 00 | 539 |
| | 00 | 534 |
| | 00 | 540 |
| | 00 | 535 |
| | 00 | 535 |
| | 00 | 533 |
| | 00 | 536 |
| | 00 | 531 |
| | 00 | 535 |
| | 00 | 526 |
| 0.55 | 00 | 515 |
| | 00 | 512 |
| | 00 | 524 |
| | 00 | 519 |
| | 00 | 519 |
| | 00 | 518 |
| | 00 | 518 |
| | 00 | 514 |
| | 00 | 502 |
| | 00 | 500 |
| 0.50 | 00 | 424 |

RESET LVDT & CONTINUE LOADING

| | | |
|---|---|---|
| 0.50 | 00 | 488 |
| | 00 | 509 |
| | 00 | 514 |
| | 00 | 512 |

SECOND STUD FAILED, END TEST

| | | |
|---|---|---|
| | 00 - | 002 |
| | 00 | 280 |
| | 00 | 275 |
| | 00 | 284 |
| | 00 | 287 |
| | 00 | 288 |
| | 00 | 283 |
| | 00 | 286 |
| | 00 | 286 |
| | 00 | 287 |
| | 00 | 286 |
| | 00 | 282 |
| | 00 | 282 |
| | 00 | 279 |
| | 00 | 279 |
| | 00 | 276 |
| | 00 | 268 |
| | 00 | 239 |
| | 00 | 204 |
| | 00 | 164 |
| | 00 | 116 |
| | 00 | 070 |

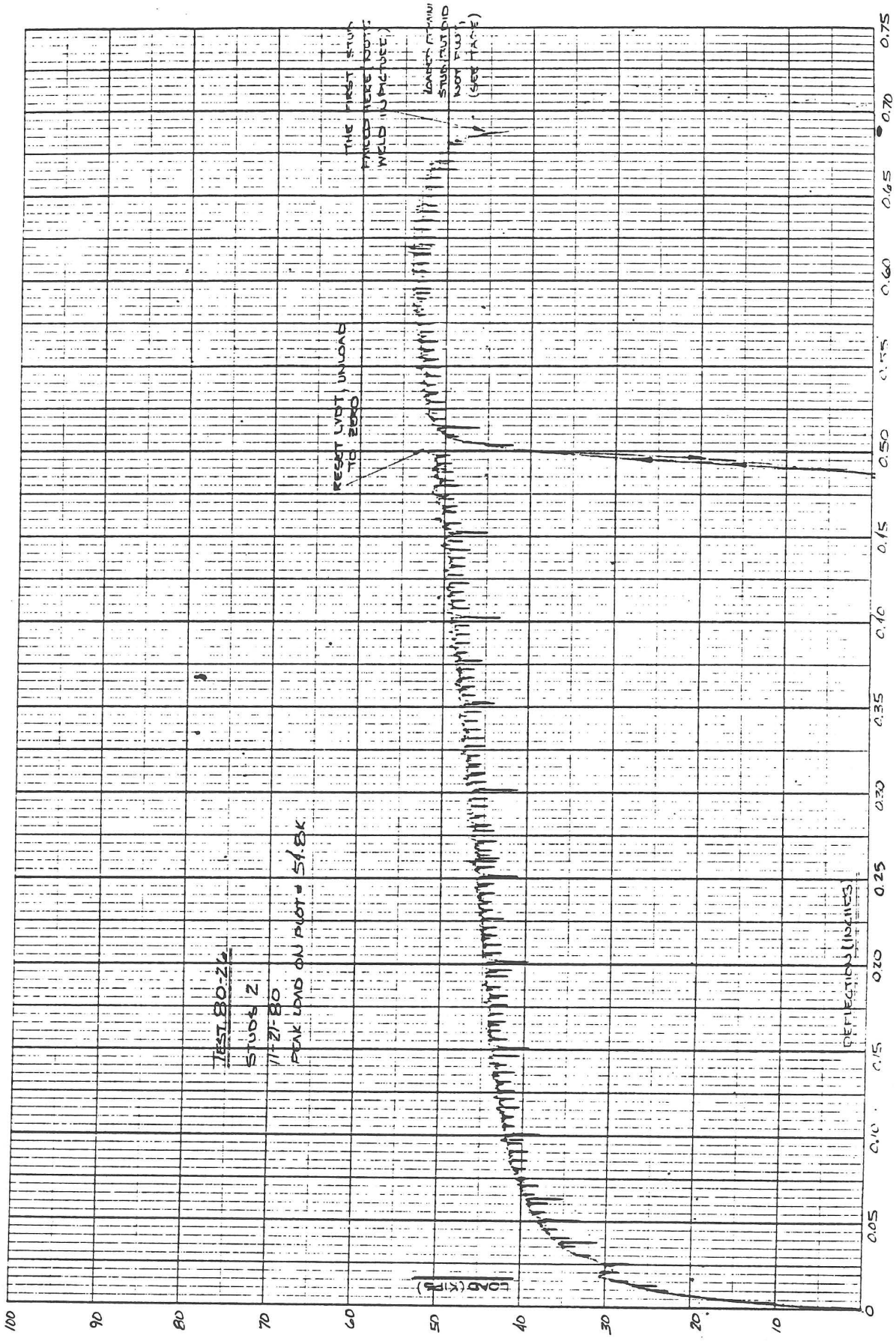
TEST 80-26
STUDS 2
11-21-80
PEAK LOAD ON PLOT = 54.8K
RESET LVDT, UNLOAD TO ZERO
THE FIRST STUD FAILED HERE (OUT WELD "J" PLATE)
LOADED AT 100 STUD FAILED NOW FULL (SEE TAPE)
LOAD (KIPS)
DEFLECTIONS (INCHES)
100
90
80
70
60
50
40
30
20
10
0
0.05
0.10
0.15
0.20
0.25
0.30
0.35
0.40
0.45
0.50
0.55
0.60
0.65
0.70
0.75

# UNITED ENGINEERS CONTAINMENT LINER ANCHOR LOAD TEST



TEST SPECIMEN: STUDS 3
PEAK LOAD: 52.5 KIPS
f'c: PSI
DIAL # 1 LOCATION: 1.5 IN ABOVE LVDT PROBE TO INDICATE HORIZONAL DEFLECTION OF PLATE
DIAL # 2 LOCATION: 7 IN FROM THE BACK FACE OF BLOCK TO INDICATE ROTATION
VISHAY-ELLIS CALIBRATION #: 290

DATE: 12-2-80
WITNESSES: STETHEN, HALEY, COBLEY, BURDETTE, T. HAYES, GALUNIC

DIAL #3 LOCATION: 3½ IN BEHIND STUDS TO MEASURE PLATE UPLIFT

TEST 80-26

| MULTI-METER READING (VOLTS) | LVDT DEFL (IN) | LOAD (KIPS) | DIAL#1 (IN) x10$^{-3}$ | DIAL#2 (IN) x10$^{-3}$ | DIAL#3 (IN) x10$^{-3}$ |
|---|---|---|---|---|---|
| 0.00 | 0.000 | 0.0 | 0 | 0 | 0 |
| 0.25 | 0.013 | 15.7 | 12 | 0 | 5 |
| 0.50 | 0.025 | 29.9 | 24 | 0 | 17 |
| 0.75 | 0.038 | 37.9 | 36 | 0 | 27 |
| 1.00 | 0.050 | 39.7 | 50 | 0 | 38 |
| 1.25 | 0.063 | 40.6 | 62 | 0 | 46 |
| 1.50 | 0.075 | 42.7 | 76 | 0 | 52 |
| 2.00 | 0.100 | 43.8 | 102 | 0 | 61 |
| 3.00 | 0.150 | 45.9 | 154 | 0 | 77 |
| 4.00 | 0.200 | 47.1 | 207 | 0 | 93 |
| 5.00 | 0.250 | 48.4 | 258 | 0 | 104 |
| 6.00 | 0.300 | 49.6 | 311 | 0 | 115 |
| 7.00 | 0.350 | 50.0 | 361 | 0 | 125 |
| 8.00 | 0.400 | 50.9 | 415 | 0 | 130 |
| 9.00 | 0.450 | 50.3 | 466 | 0 | 135 |
| ONE STUD FAILED, RESET LVDT, DISCONNECT DIAL #1 | | | | | |
| 6.30 | 0.550 | 24.1 | ——— | 2 | 132 |
| 7.30 | 0.600 | SECOND STUD FAILED | | | |
| *NOTE: BOTH STUDS FAILED OUTSIDE THE WELD REGION | | | | | |
| | | | | | |

COMMENTS:

| | | |
|---|---|---|
| | 00 | 504 |
| | 00 | 513 |
| | 00 | 505 |
| | 00 | 507 |
| | 00 | 511 |
| | 00 | 510 |
| | 00 | 512 |
| 0.45 | 00 | 503 |
| | 00 | 498 |
| | 00 | 508 |
| | 00 | 507 |
| | 00 | 508 |
| | 00 | 496 |
| | 00 | 506 |
| | 00 | 506 |
| | 00 | 510 |
| | 00 | 512 |
| 0.40 | 00 | 509 |
| | 00 | 508 |
| | 00 | 516 |
| | 00 | 515 |
| | 00 | 513 |
| | 00 | 513 |
| | 00 | 511 |
| | 00 | 510 |
| | 00 | 505 |
| | 00 | 514 |
| 0.35 | 00 | 500 |
| | 00 | 502 |
| | 00 | 507 |
| | 00 | 505 |
| | 00 | 502 |
| | 00 | 505 |
| | 00 | 503 |
| | 00 | 500 |
| | 00 | 487 |
| | 00 | 501 |
| 0.30 | 00 | 496 |
| | 00 | 497 |
| | 00 | 492 |
| | 00 | 494 |
| | 00 | 495 |
| | 00 | 497 |
| | 00 | 489 |
| | 00 | 487 |
| | 00 | 488 |
| | 00 | 487 |
| 0.25 | 00 | 484 |
| | 00 | 483 |
| | 00 | 480 |
| | 00 | 473 |
| | 00 | 480 |
| | 00 | 476 |
| | 00 | 478 |
| | 00 | 473 |
| | 00 | 473 |
| | 00 | 470 |
| 0.20 | 00 | 471 |
| | 00 | 468 |
| | 00 | 471 |
| | 00 | 468 |
| | 00 | 468 |
| | 00 | 464 |
| | 00 | 463 |
| | 00 | 462 |
| | 00 | 459 |
| | 00 | 462 |
| 0.15 | 00 | 459 |
| | 00 | 453 |
| | 00 | 448 |
| | 00 | 449 |
| | 00 | 452 |
| | 00 | 449 |
| | 00 | 448 |
| | 00 | 447 |
| | 00 | 436 |
| | 00 | 444 |
| 0.10 | 00 | 438 |
| | 00 | 439 |
| | 00 | 436 |
| | 00 | 435 |
| | 00 | 432 |
| | 00 | 427 |
| | 00 | 427 |
| | 00 | 418 |
| | 00 | 413 |
| | 00 | 411 |
| 0.05 | 00 | 397 |
| | 00 | 390 |
| | 00 | 380 |
| | 00 | 365 |
| | 00 | 334 |
| | 00 | 299 |
| | 00 | 267 |
| | 00 | 214 |
| | 00 | 129 |
| | 00 | 088 |
| 0.0 | 00 | 000 |
| DEFL. (IN) | CHANNEL | LOAD (KIPS) |

TEST 80-26

PEAK LOAD ON PLOT = 52.5 K
PEAK LOAD ON TAPE = 51.6 K

STUDS 3
17-7-80

SECOND STUD FAILED,
END TEST

| | | |
|---|---|---|
| 0.585 | 00 | 214 |
| | 00 | 237 |
| | 00 | 244 |
| | 00 | 245 |
| | 00 | 245 |
| | 00 | 246 |
| | 00 | 245 |
| 0.55 | 00 | 241 |
| | 00 | 241 |
| | 00 | 243 |
| | 00 | 241 |
| | 00 | 238 |
| | 00 | 219 |
| | 00 | 191 |
| | 00 | 157 |
| | 00 | 109 |
| | 00 | 067 |
| 0.50 | 00 | 025 |

ONE STUD FAILED,
RESET LVDT, REMOVE
DIAL #1

| | | | |
|---|---|---|---|
| 0.495 | 00 | - | 000 |
| | 00 | | 487 |

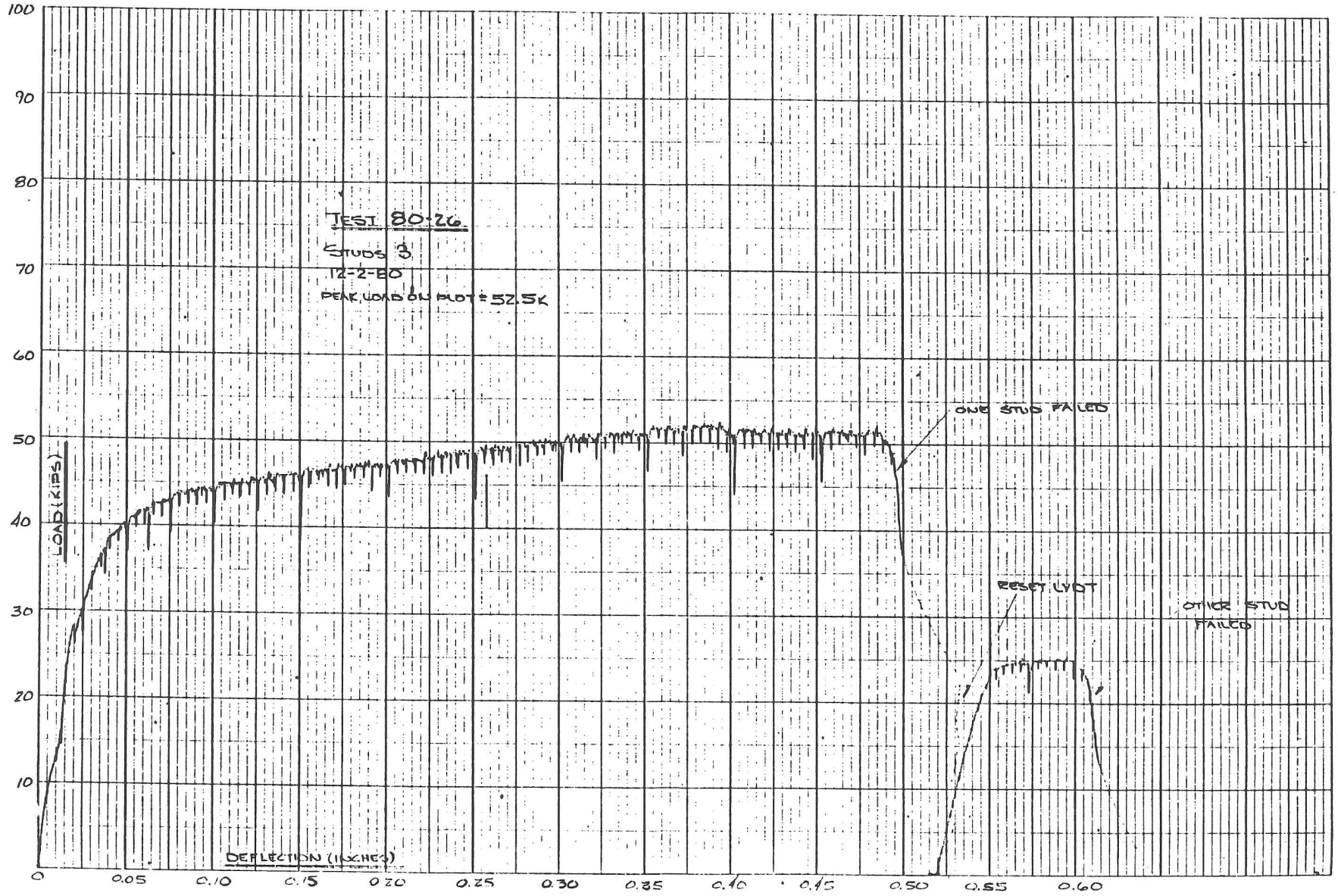
TEST 80-26
STUDS 3
12-2-80
PEAK LOAD ON PLOT = 52.5K
ONE STUD FAILED
RESET LVDT
OTHER STUD FAILED
LOAD (KIPS)
DEFLECTION (INCHES)
100
90
80
70
60
50
40
30
20
10
0
0.05
0.10
0.15
0.20
0.25
0.30
0.35
0.40
0.45
0.50
0.55
0.60

CONTAINMENT LINER ANCHOR LOAD TEST

FABRICATION OF SPECIMENS

SEABROOK PROJECT

Date: April 7, 1981

Prepared by: Branko Galunic
B. Galunic

# Containment Liner Anchor Load Test
# Fabrication of Specimens
# Seabrook Project

## 1. INTRODUCTION

The containment structure at the Seabrook Nuclear Project is a right vertical cylinder having an inside radius of 140 feet and wall thickness of 4'-6", and it has a hemispherical dome which is 3'-6" thick. At the base is a 10 foot thick mat. It is designed to resist the pressure from the most severe break in a reactor coolant pipe. In order to meet the leak tightness requirements of the vessel, a steel liner plate is installed over the inside surface of the concrete. The liner is generally 3/8 inch thick in the cylindrical portion and is thickened to 3/4 inches in the penetration areas near the base. The liner in the dome has a uniform thickness of 1/2 inch and it is 1/4 inch thick on top of the mat. It is anchored to the concrete shell by embedded structural tees and studs welded to the liner plate. Headed studs are only used on the 3/4 inch plates in the penetration area. The tees are used in all other regions.

The purpose of these tests is to define a load-deflection curve for the anchors which can be used in the analysis of the liner/anchor system. The liner strains and anchor displacements must meet the requirements of the ASME Section III Division 2 Code.

## 2. MATERIALS

### 2.1 Tees

The tees are made from SA36 steel. They were rolled in Japan and accordingly have metric dimensions. The tee WT 100x100 corresponds very closely

with the American WT 4x7.5 (3.94 in. vs 4.0 in. flange width).

2.2 Studs

The stud material conforms to ASTM Specification A-108 Grade 1018. The yield stress is approximately 50 ksi and the ultimate strength is approximately 60 ksi.

2.3 Liner Plate

The liner plate is made from SA 516 Grade 60 steel (Specification 9763.006 15-1). The plate was cut so that the tensile load on the plate during the test is applied in the direction of rolling. The plate thickness used for all tests, including the studs, was 3/8 inch. In the containment structure the studs are welded to a 3/4 inch plate. It is expected that the thinner plate used in the test will permit larger rotations of the anchor in the vicinity of the plate causing larger stresses in the concrete and thereby conservative results.

2.4 Concrete

All concrete was mixed in accordance with PSNH Specification 9763.006 69-7 and 9763-69-3. The design strength was 4000 psi. The concrete mix is the same as used in the containment structure. An air-entraining and retarding admixture was used. The concrete was Atlantic Type II and the coarse aggregate conforms to ASTM C-67.

2.5 Reinforcement

The concrete is reinforced with rebar that conforms to ASTM A615 Grade 60 Specifications.

3. DESIGN OF SPECIMENS

The dimensions of the specimens, the reinforcement and pertinent details are shown in the drawing LT-1. The overall size of the specimens and the length and taper of the liner were based on the dimensional limitations of the testing equipment. The reinforcement served two purposes. It first provided a confinement of the concrete and prevented cracking that could occur during transportation and other handling. Also, additional rebar were placed on the side of the tees away from the load application. The purpose of these bars was to prevent overall cracking of the specimen when the test load is applied. They are intended to eliminate failure modes that might occur due to the physical limitations of the test specimen. Any cracking of the free vertical surfaces would not be representative of what could occur in the actual structure which is continuous. The length of the tee specimens was held to 12 inches, to minimize the effect of the free edge.

These problems are not expected to occur when studs are used because the failure will be localized to a small area. The same overall dimensions were used for simplicity of fabrication.

4. POURING PROCEDURE

The test block forms were fabricated at the Seabrook site. The liner formed one side of the form as is the case in the containment structure. The tees were oriented vertically during the pouring operation. Before the concrete was poured a thin coating of WD-40 was sprayed on the liner to eliminate bond between the liner and concrete. Concrete was mixed at the Site Batch Plant and brought to the test area by trucks. The concrete was placed into the forms by a pump truck to simulate actual field placement conditions.

Each specimen was fabricated in three lifts. After each lift a vibrator was used to consolidate the concrete and eliminate voids. Two different trucks were used. Twelve cylinders were taken from each truck. In addition, six cylinders were made for each specimen. These were stored on site in a controlled environment curing room. Three were broken on the day of the test of the specimen. At the end of the pour the top of the concrete surface was troweled to a smooth finish. A chemical curing compound was applied to the exposed surface to seal in moisture and thereby replace water curing.

5. TRANSPORTATION

The specimens were transported to Knoxville, Tennessee on two flatbed trucks 14 days after fabrication. Five day cylinder breaks indicated a strength of 3550 psi.

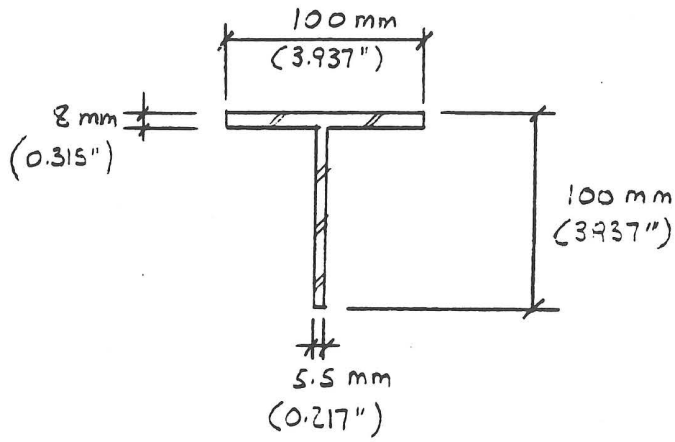


TEE SECTION

FIGURE 1.

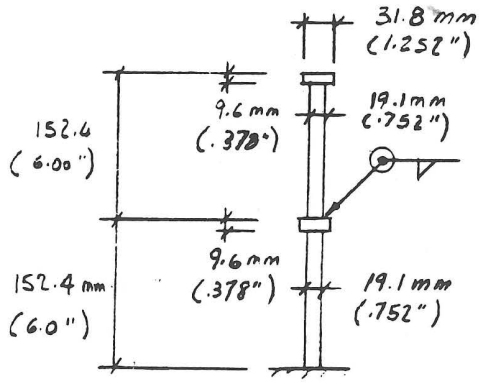


STUD DETAIL

FIGURE 2

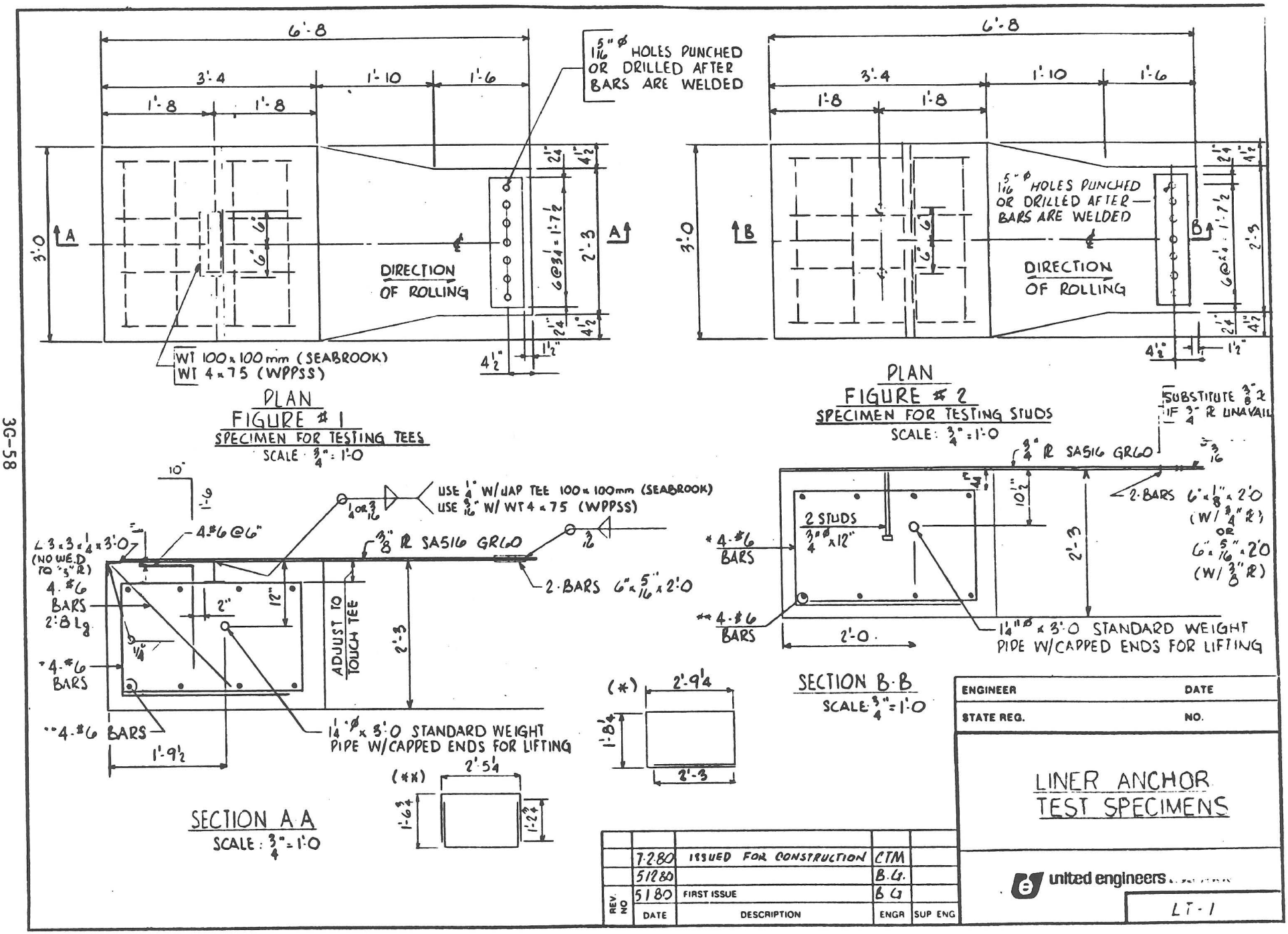


| REV. NO | DATE | DESCRIPTION | ENGR | SUP ENG |
|---|---|---|---|---|
| | 7-2-80 | ISSUED FOR CONSTRUCTION | CTM | |
| | 5-12-80 | | B.G. | |
| | 5-1-80 | FIRST ISSUE | B.G. | |

| ENGINEER | DATE |
|---|---|
| STATE REG. | NO. |

LINER ANCHOR TEST SPECIMENS

united engineers

LT-1

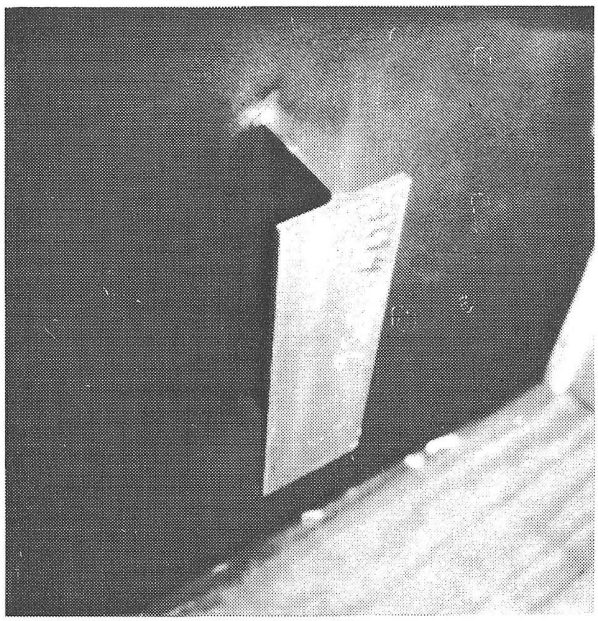

**Plate 1: Close-up of tee welded to liner plate**

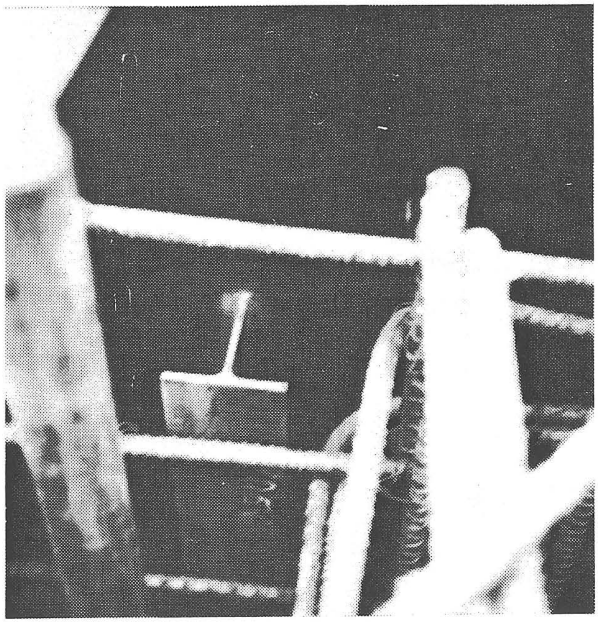

**Plate 2: Reinforcing cage and tee**

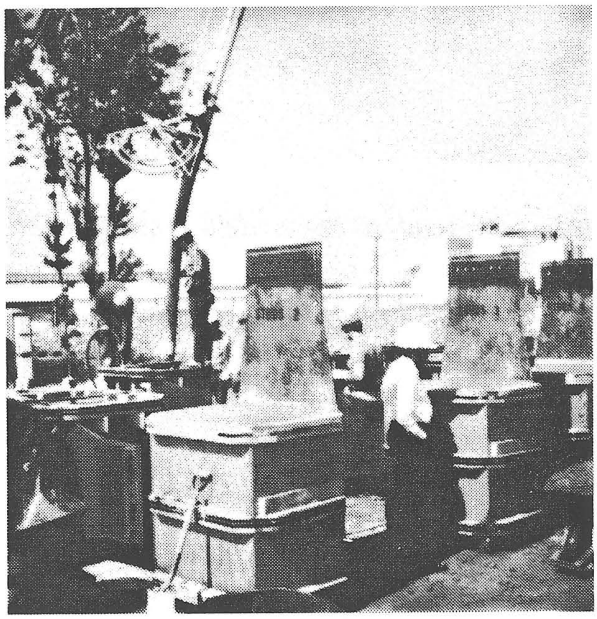

**Plate 3: Finished specimens at end of pouring operation**

**APPENDIX 3H** **(DELETED IN AMENDMENT 53)**