SEABROOK STATION

UPDATED FINAL SAFETY ANALYSIS REPORT

Revision 19

Page No.	Rev. No.
CHAPTER 1	
Section 1.1	
1	12
2	12
3	12
Section 1.2	
1	18
2	18
3	18
4	18
5	18
6	18
7	18
8	18
9	18
10	18
11	18
12	18
13	18
14	18
15	18
16	18
17	18
18	18
19	18
20	18
21	18
22	18
23	18
24	18
Section 1.3	
1	8
Section 1.4	
1	9
2	9
3	9
Section 1.5	
1	8
2	8
3	8
Section 1.6	
1	8
Section 1.7	
1	9
2	9
Section 1.8	
1	19
2	19
3	19
4	19
5	19
6	19
7	19
8	19
9	19
10	19
11	19
12	19
13	19
14	19
15	19
16	19
17	19
18	19
19	19
20	19
21	19
22	19
23	19
24	19
25	19
26	19
27	19
28	19
29	19
30	19
31	19
32	19
33	19
34	19
35	19
36	19
37	19
38	19
39	19
40	19
41	19
42	19
43	19
44	19
45	19
46	19
47	19
48	19
49	19
50	19
51	19
52	19
53	19
54	19
55	19
56	19
57	19
58	19
59	19
60	19
61	19
62	19
63	19
64	19
65	19
66	19
67	19
68	19
69	19
70	19
71	19
72	19
Section 1.9	
1	17
2	17
3	17
4	17
5	17
6	17
7	17
8	17
9	17
10	17
11	17
12	17
13	17
14	17
15	17
16	17
17	17
18	17
19	17
20	17
21	17
22	17
23	17
24	17
25	17
26	17
27	17
28	17
29	17
30	17
31	17
32	17
Chapter 1 Tables	
1.1-1	18

Page No.	Rev. No.
1.3-1	19
1.3-2	19
1.5-1	8
1.5-2	8
1.6-1	18
1.8-1	8
1.8-2	8
Chapter 1 Figures	
1.1-1	8
1.1-2	8
1.2-1	12
1.2-2	8
1.2-3	8
1.2-4	8
1.2-5	8
1.2-6	8
1.2-6A	8
1.2-7	8
1.2-8	8
1.2-9	8
1.2-10	8
1.2-11	8
1.2-12	8
1.2-13	8
1.2-14	8
1.2-15	8
1.2-16	8
1.2-17	8
1.2-18	8
1.2-19	8
1.2-20	8
1.2-21	8
1.2-22	8
1.2.23	8
1.2.24	8
1.2.25	8
1.2.26	8
1.2.27	8
1.2.28	8
1.2.29	8
1.2.30	8
1.2.31	8
1.2.32	8
1.2.33	8
1.2.34	8
1.2.35	8
1.2.36	8
1.2.37	8
1.2.38	8
1.2.39	8
1.2.40	8
1.2.41	8
1.2.42	8
1.2.43	8
1.2.44	8
1.2.45	8
1.2.46	8
1.2.47	8
1.2.48	8
1.2.49	8
1.2.50	8
1.2.51	8
1.2.52	8
1.2.53	8
1.2.54	8
1.2.55	8
1.2.56	8
1.2.57	8
1.2.58	8
1.2.59	8
1.8-1	8
CHAPTER 2	
Section 2.1	
1	14
2	14
3	14
4	14
5	14
6	14
7	14
8	14
9	14
10	14
11	14
12	14
13	14
14	14
15	14
16	14
17	14
18	14
19	14
20	14
21	14
22	14
23	14
24	14
25	14
26	14
27	14
28	14
29	14
30	14
Section 2.2	
1	19
2	19
3	19
4	19
5	19
6	19
7	19
8	19
9	19
10	19
11	19
12	19
13	19
14	19
15	19
16	19
17	19
18	19
19	19
20	19
21	19
22	19
23	19
24	19
25	19
26	19
27	19
28	19
29	19
30	19
31	19
32	19
33	19
34	19
35	19
36	19
37	19
38	19
39	19
Section 2.3	
1	17
2	17
3	17
4	17
5	17
6	17
7	17
8	17
9	17

Page No.	Rev. No.	Page No.	Rev. No.	Page No.	Rev. No.
10	17	13	17	10	19
11	17	14	17	11	19
12	17	15	17	12	19
13	17	16	17	13	19
14	17	17	17	14	19
15	17	18	17	15	19
16	17	19	17	16	19
17	17	20	17	17	19
18	17	21	17	18	19
19	17	22	17	19	19
20	17	23	17	20	19
21	17	24	17	21	19
22	17	25	17	22	19
23	17	26	17	23	19
24	17	27	17	24	19
25	17	28	17	25	19
26	17	29	17	26	19
27	17	30	17	27	19
28	17	31	17	28	19
29	17	32	17	29	19
30	17	33	17	30	19
31	17	34	17	31	19
32	17	35	17	32	19
33	17	36	17	33	19
34	17	37	17	34	19
35	17	38	17	35	19
36	17	39	17	36	19
37	17	40	17	37	19
38	17	41	17	38	19
39	17	42	17	39	19
40	17	43	17	40	19
41	17	44	17	41	19
42	17	45	17	42	19
43	17	46	17	43	19
44	17	47	17	44	19
45	17	48	17	45	19
46	17	49	17	46	19
47	17	50	17	47	19
Section 2.4		51	17	48	19
1	17	52	17	49	19
2	17	53	17	50	19
3	17	**Section 2.5**		51	19
4	17	1	19	52	19
5	17	2	19	53	19
6	17	3	19	54	19
7	17	4	19	55	19
8	17	5	19	56	19
9	17	6	19	57	19
10	17	7	19	58	19
11	17	8	19	59	19
12	17	9	19	60	19

Page No.	Rev. No.	Page No.	Rev. No.	Page No.	Rev. No.
61	19	112	19	163	19
62	19	113	19	164	19
63	19	114	19	165	19
64	19	115	19	166	19
65	19	116	19	167	19
66	19	117	19	168	19
67	19	118	19	169	19
68	19	119	19	170	19
69	19	120	19	171	19
70	19	121	19	172	19
71	19	122	19	173	19
72	19	123	19	174	19
73	19	124	19	175	19
74	19	125	19	176	19
75	19	126	19	177	19
76	19	127	19	178	19
77	19	128	19	179	19
78	19	129	19	180	19
79	19	130	19	181	19
80	19	131	19	182	19
81	19	132	19	183	19
82	19	133	19	184	19
83	19	134	19	185	19
84	19	135	19	186	19
85	19	136	19	187	19
86	19	137	19	188	19
87	19	138	19	189	19
88	19	139	19	190	19
89	19	140	19	191	19
90	19	141	19	192	19
91	19	142	19	193	19
92	19	143	19	194	19
93	19	144	19	195	19
94	19	145	19	**Chapter 2 Appendices**	
95	19	146	19	2A – Historical Only, Not Revised	
96	19	147	19		
97	19	148	19	2B – Historical Only, Not Revised	
98	19	149	19		
99	19	150	19	2C – Historical Only, Not Revised	
100	19	151	19		
101	19	152	19	2D – Historical Only, Not Revised	
102	19	153	19		
103	19	154	19	2E – Historical Only, Not Revised	
104	19	155	19		
105	19	156	19	2F – Historical Only, Not Revised	
106	19	157	19		
107	19	158	19	2G – Historical Only, Not Revised	
108	19	159	19		
109	19	160	19	2H – Historical Only, Not Revised	
110	19	161	19		
111	19	162	19		

Page No.	Rev. No.
2I – Historical Only, Not Revised	
2J – Historical Only, Not Revised	
2K – Historical Only, Not Revised	
2L – Historical Only, Not Revised	
2M – Historical Only, Not Revised	
2N – Historical Only, Not Revised	
2O – Historical Only, Not Revised	
2P – Historical Only, Not Revised	
2Q-1	10
2Q-2	10
2R-1	10
2R-2	10
2R-3	10
Chapter 2 Tables	
2.1-1	8
2.1-2	8
2.1-3	8
2.1-4	8
2.1-5	8
2.1-6	8
2.1-7	8
2.1-8	8
2.1-9	8
2.1-10	8
2.1-11	8
2.1-12	8
2.1-13	8
2.1-14	8
2.1-15	8
2.1-16	8
2.1-17	8
2.1-18	8
2.1-19	8
2.1-20	8
2.1-21	8
2.2-1	19
2.2-2	13
2.2-3	8
2.2-4	8
2.2-5	8
2.2-6	8
2.2-7	8
2.2-8	8
2.2-9	8
2.2-10	8
2.2-11	8
2.2-12	8
2.2-13	8
2.2-14	8
2.2-15	8
2.2-16	8
2.2-17	8
2.3-1	8
2.3-2	8
2.3-3	8
2.3-4	8
2.3-5	8
2.3-6	8
2.3-7	8
2.3-8	8
2.3-9	8
2.3-10	8
2.3-11	8
2.3-12	8
2.3-13	8
2.3-14	19
2.3-15	8
2.3-16	8
2.3-17	8
2.3-18	8
2.3-19	8
2.3-20	8
2.3-21	8
2.3-22	8
2.3-23	8
2.3-24	8
2.3-25	8
2.3-26	8
2.3-27	8
2.3-28	8
2.3-29	8
2.3-30	8
2.3-31	8
2.3-32	8
2.3-33	8
2.3-34	8
2.3-35	8
2.3-36	17
2.3-37	17
2.3-38	8
2.3-39	8
2.3-40	8
2.3-41	8
2.3-42	8
2.3-43	8
2.3-44	8
2.3-45	8
2.3-46	8
2.3-47	8
2.3-48	8
2.3-49	8
2.3-50	8
2.3-51	8
2.3-52	8
2.3-53	8
2.3-54	8
2.3-55	8
2.3-56	8
2.3-57	8
2.3-58	8
2.3-59	8
2.3-60	8
2.3-61	8
2.3-62	8
2.4-1	8
2.4-2	8
2.4-3	8
2.4-4	8
2.4-5	8
2.4-6	8
2.4-7	8
2.4-8	8
2.4-9	8
2.4-10	8
2.4-11	8
2.4-12	8
2.4-13	16
2.4-14	8
2.4-15	8
2.4-16	8
2.4-17	8
2.4-18	8
2.4-19	8
2.4-20	8
2.4-21	8
2.4-22	8
2.4-23	8
2.5-1	8
2.5-2	8
2.5-3	8
2.5-4	8
2.5-5	8
2.5-6	8
2.5-7	8
2.5-8	8

Page No.	Rev. No.	Page No.	Rev. No.	Page No.	Rev. No.
2.5-9	8	2.2-2	9	2.4-27	8
2.5-10	8	2.2-3	8	2.4-28	8
2.5-11	8	2.2-4	8	2.4-29	8
2.5-12	8	2.2-5	19	2.4-30	8
2.5-13	16	2.2-6	8	2.4-31	8
2.5-14	8	2.2-7	8	2.4-32	8
2.5-15	8	2.2-8	8	2.5-1	8
2.5-16	8	2.2-9	8	2.5-2	8
2.5-17	8	2.2-10	8	2.5-3	8
2.5-18	8	2.2-11	8	2.5-4	8
2.5-19	8	2.2-12	8	2.5-5	8
2.5-20	18	2.2-13	8	2.5-6	8
2.5-21	8	2.2-14	8	2.5-7	8
2.5-22	16	2.2-15	8	2.5-8	8
2R-1	10	2.3-1	8	2.5-9	8
2R-2	10	2.3-2	8	2.5-10	8
2R-3	10	2.3-3	8	2.5-11	8
Chapter 2 Figures		2.3-4	8	2.5-12	8
2.1-1	8	2.3-5	8	2.5-13	8
2.1-2	8	2.3-6	8	2.5-14	8
2.1-3	8	2.3-7	8	2.5-15	8
2.1-4	17	2.3-8	8	2.5-16	8
2.1-5	17	2.3-9	8	2.5-17	8
2.1-6	8	2.3-10	8	2.5-18	8
2.1-7	8	2.3-11	8	2.5-19	8
2.1-8	8	2.4-1	12	2.5-20	8
2.1-9	8	2.4-2	8	2.5-21	8
2.1-10	8	2.4-3	8	2.5-22	8
2.1-11	8	2.4-4	8	2.5-23	8
2.1-12	8	2.4-5	8	2.5-24	8
2.1-13	8	2.4-6	8	2.5-25	8
2.1-14	8	2.4-7	8	2.5-26	8
2.1-15	8	2.4-8	8	2.5-27	8
2.1-16	8	2.4-9	8	2.5-28	8
2.1-17	8	2.4-10	8	2.5-29	8
2.1-18	8	2.4-11	8	2.5-30	8
2.1-19	8	2.4-12	8	2.5-31	8
2.1-20	8	2.4-13	8	2.5-32	8
2.1-21	8	2.4-14	8	2.5-33	8
2.1-22	8	2.4-15	8	2.5-34	8
2.1-23	8	2.4-16	8	2.5-35	8
2.1-24	8	2.4-17	8	2.5-36	8
2.1-25	8	2.4-18	8	2.5-37	8
2.1-26	8	2.4-19	8	2.5-38	8
2.1-27	8	2.4-20	8	2.5-39	8
2.1-28	8	2.4-21	8	2.5-40	8
2.1-29	8	2.4-22	8	2.5-41	8
2.1-30	8	2.4-23	8	2.5-42	8
2.1-31	8	2.4-24	8	2.5-43	8
2.1-32	8	2.4-25	8	2.5-44	8
2.2-1	19	2.4-26	8	2.5-45	8

Page No.	Rev. No.
2.5-46	8
2.5-47	8
2.5-48	8
2.5-49	8
2.5-50	16
2.5-51	8
2.5-52	8
2.5-53	8
2.5-54	8
2.5-55	8
2.5-56	8
2.5-57	8
2.5-58	8
2.5-59	8
2.5-60	8
2.5-61	8
2.5-62	8
2.5-63	8
2.5-64	8
2.5-65	8
2.5-66	8
2.5-67	8
2.5-68	8
2.5-69	8
2.5-70	8
2.5-71	8
CHAPTER 3	
Section 3.1	
1	12
2	12
3	12
4	12
5	12
6	12
7	12
8	12
9	12
10	12
11	12
12	12
13	12
14	12
15	12
16	12
17	12
18	12
19	12
20	12
21	12
22	12
23	12
24	12
25	12
26	12
27	12
28	12
29	12
30	12
31	12
32	12
33	12
34	12
35	12
36	12
37	12
Section 3.2	
1	19
2	19
3	19
4	19
Section 3.3	
1	8
2	8
3	8
4	8
5	8
6	8
7	8
Section 3.4	
1	17
2	17
3	17
4	17
Section 3.5	
1	18
2	18
3	18
4	18
5	18
6	18
7	18
8	18
9	18
10	18
11	18
12	18
13	18
14	18
15	18
16	18
17	18
18	18
19	18
20	18
21	18
22	18
23	18
24	18
25	18
26	18
27	18
28	18
29	18
30	18
31	18
32	18
33	18
34	18
35	18
36	18
37	18
38	18
39	18
40	18
41	18
Section 3.6(B)	
1	8
2	8
3	8
4	8
5	8
6	8
7	8
8	8
9	8
10	8
11	8
12	8
13	8
14	8
15	8
16	8
17	8
18	8
19	8
20	8
21	8
22	8
23	8
24	8
25	8
26	8
Section 3.6(N)	

Page No.	Rev. No.	Page No.	Rev. No.	Page No.	Rev. No.
1	10	12	8	38	18
2	10	13	8	39	18
3	10	14	8	40	18
4	10	15	8	41	18
5	10	16	8	42	18
6	10	17	8	43	18
7	10	18	8	44	18
8	10	19	8	45	18
9	10	20	8	46	18
Section 3.7(B)		21	8	47	18
1	18	22	8	48	18
2	18	23	8	49	18
3	18	24	8	50	18
4	18	**Section 3.8**		51	18
5	18	1	18	52	18
6	18	2	18	53	18
7	18	3	18	54	18
8	18	4	18	55	18
9	18	5	18	56	18
10	18	6	18	57	18
11	18	7	18	58	18
12	18	8	18	59	18
13	18	9	18	60	18
14	18	10	18	61	18
15	18	11	18	62	18
16	18	12	18	63	18
17	18	13	18	64	18
18	18	14	18	65	18
19	18	15	18	66	18
20	18	16	18	67	18
21	18	17	18	68	18
22	18	18	18	69	18
23	18	19	18	70	18
24	18	20	18	71	18
25	18	21	18	72	18
26	18	22	18	73	18
27	18	23	18	74	18
28	18	24	18	75	18
29	18	25	18	76	18
Section 3.7(N)		26	18	77	18
1	8	27	18	78	18
2	8	28	18	79	18
3	8	29	18	80	18
4	8	30	18	81	18
5	8	31	18	82	18
6	8	32	18	83	18
7	8	33	18	84	18
8	8	34	18	85	18
9	8	35	18	86	18
10	8	36	18	87	18
11	8	37	18	88	18

Page No.	Rev. No.	Page No.	Rev. No.	Page No.	Rev. No.
89	18	140	18	36	19
90	18	141	18	37	19
91	18	142	18	38	19
92	18	143	18	39	19
93	18	144	18	40	19
94	18	145	18	41	19
95	18	146	18	42	19
96	18	147	18	43	19
97	18	148	18	44	19
98	18	149	18	45	19
99	18	150	18	46	19
100	18	151	18	47	19
101	18	152	18	48	19
102	18	153	18	49	19
103	18	154	18	50	19
104	18	**Section 3.9(B)**		51	19
105	18	1	19	52	19
106	18	2	19	**Section 3.9(N)**	
107	18	3	19	1	19
108	18	4	19	2	19
109	18	5	19	3	19
110	18	6	19	4	19
111	18	7	19	5	19
112	18	8	19	6	19
113	18	9	19	7	19
114	18	10	19	8	19
115	18	11	19	9	19
116	18	12	19	10	19
117	18	13	19	11	19
118	18	14	19	12	19
119	18	15	19	13	19
120	18	16	19	14	19
121	18	17	19	15	19
122	18	18	19	16	19
123	18	19	19	17	19
124	18	20	19	18	19
125	18	21	19	19	19
126	18	22	19	20	19
127	18	23	19	21	19
128	18	24	19	22	19
129	18	25	19	23	19
130	18	26	19	24	19
131	18	27	19	25	19
132	18	28	19	26	19
133	18	29	19	27	19
134	18	30	19	28	19
135	18	31	19	29	19
136	18	32	19	30	19
137	18	33	19	31	19
138	18	34	19	32	19
139	18	35	19	33	19

Page No.	Rev. No.
34	19
35	19
36	19
37	19
38	19
39	19
40	19
41	19
42	19
43	19
44	19
45	19
46	19
47	19
48	19
49	19
50	19
51	19
52	19
53	19
54	19
55	19
56	19
57	19
58	19
59	19
60	19
61	19
62	19
63	19
64	19
65	19
66	19
67	19
68	19
69	19
70	19
71	19
72	19
73	19
74	19
75	19
76	19
77	19
78	19
79	19
80	19
81	19
82	19
83	19
84	19
85	19
86	19
87	19
88	19
89	19
90	19
91	19
92	19
93	19
Section 3.10(B)	
1	8
2	8
3	8
4	8
5	8
Section 3.10(N)	
1	8
2	8
3	8
4	8
5	8
Section 3.11	
1	10
2	10
3	10
4	10
5	10
6	10
7	10
Chapter 3 Appendices	
3A	
3A-1	12
3A-2	12
3A-3	12
3A-4	12
3A-5	12
3A-6	12
3B	
3B-1	8
3C – Historical Only, Not Revised	
3D – Historical Only, Not Revised	
3E – Historical Only, Not Revised	
3F – Historical Only, Not Revised	
3G – Historical Only, Not Revised	
3H	
3H-1	8
3I – Historical Only, Not Revised	
Chapter 3 Tables	
3.2-1	13
3.2-2	13
3.2-3	15
3.2-4	8
3.3-1	8
3.3-2	8
3.3-3	8
3.3-4	8
3.5-1	8
3.5-2	8
3.5-3	8
3.5-4	8
3.5-5	8
3.5-6	8
3.5-7	8
3.5-8	8
3.5-9	18
3.5-10	18
3.5-11	8
3.5-12	18
3.5-13	8
3.6(B)-1	8
3.6(B)-2	10
3.6(N)-1	8
3.7(B)-1	8
3.7(B)-2	8
3.7(B)-3	8
3.7(B)-4	8
3.7(B)-5	8
3.7(B)-6	8
3.7(B)-7	8
3.7(B)-8	8
3.7(B)-9	8
3.7(B)-10	8
3.7(B)-11	8
3.7(B)-12	8
3.7(B)-13	8
3.7(B)-14	8
3.7(B)-15	8
3.7(B)-16	8
3.7(B)-17	8
3.7(B)-18	8
3.7(B)-19	8
3.7(B)-20	8
3.7(B)-21	8
3.7(B)-22	8

Page No.	Rev. No.	Page No.	Rev. No.	Page No.	Rev. No.
3.7(B)-23	8	3.9(N)-5	8	3.6(B)-33	8
3.7(B)-24	8	3.9(N)-6	8	3.6(B)-34	8
3.7(N)-1	8	3.9(N)-7	8	3.6(N)-1	8
3.8-1	8	3.9(N)-8	8	3.6(N)-2	8
3.8-2	8	3.9(N)-9	8	3.7(B)-1	8
3.8-3	8	3.9(N)-10	8	3.7(B)-2	8
3.8-4	8	3.9(N)-11	13	3.7(B)-3	8
3.8-5	8	3.9(N)-12	8	3.7(B)-4	8
3.8-6	8	3.10(B)-1	18	3.7(B)-5	8
3.8-7	8	3.10(N)-1	8	3.7(B)-6	8
3.8-8	8	**Chapter 3 Figures**		3.7(B)-7	8
3.8-9	8	3.3-1	8	3.7(B)-8	8
3.8-10	8	3.3-2	8	3.7(B)-9	8
3.8-11	8	3.4-1	8	3.7(B)-10	8
3.8-12	8	3.5-1	8	3.7(B)-11	8
3.8-13	8	3.5-2	8	3.7(B)-12	8
3.8-14	8	3.5-3	8	3.7(B)-13	8
3.8-15	8	3.5-4	8	3.7(B)-14	8
3.8-16	8	3.5-5	8	3.7(B)-15	8
3.8-17	8	3.6(B)-1	8	3.7(B)-16	8
3.9(B)-1	8	3.6(B)-2	8	3.7(B)-17	8
3.9(B)-2	8	3.6(B)-3	8	3.7(B)-18	8
3.9(B)-3	8	3.6(B)-4	8	3.7(B)-19	8
3.9(B)-4	8	3.6(B)-5	8	3.7(B)-20	8
3.9(B)-5	8	3.6(B)-6	8	3.7(B)-21	8
3.9(B)-6	8	3.6(B)-7	8	3.7(B)-22	8
3.9(B)-7	8	3.6(B)-8	8	3.7(B)-23	8
3.9(B)-8	8	3.6(B)-9	8	3.7(B)-24	8
3.9(B)-9	8	3.6(B)-10	8	3.7(B)-25	8
3.9(B)-10	8	3.6(B)-11	8	3.7(B)-26	8
3.9(B)-11	8	3.6(B)-12	8	3.7(B)-27	8
3.9(B)-12	8	3.6(B)-13	8	3.7(B)-28	8
3.9(B)-13	8	3.6(B)-14	8	3.7(B)-29	8
3.9(B)-14	8	3.6(B)-15	8	3.7(B)-30	8
3.9(B)-15	8	3.6(B)-16	8	3.7(B)-31	8
3.9(B)-16	8	3.6(B)-17	8	3.7(B)-32	8
3.9(B)-17	9	3.6(B)-18	8	3.7(B)-33	8
3.9(B)-18	8	3.6(B)-19	8	3.7(B)-34	8
3.9(B)-19	12	3.6(B)-20	8	3.7(B)-35	8
3.9(B)-20	8	3.6(B)-21	8	3.7(B)-36	8
3.9(B)-21	8	3.6(B)-22	8	3.7(B)-37	8
3.9(B)-22	8	3.6(B)-23	8	3.7(B)-38	8
3.9(B)-23	8	3.6(B)-24	8	3.7(N)-1	8
3.9(B)-26	9	3.6(B)-25	8	3.8-1	8
3.9(B)-27	18	3.6(B)-26	8	3.8-2	8
3.9(B)-28	18	3.6(B)-27	8	3.8-3	8
3.9(B)-29	9	3.6(B)-28	8	3.8-4	8
3.9(N)-1	10	3.6(B)-29	8	3.8-5	8
3.9(N)-2	8	3.6(B)-30	8	3.8-6	8
3.9(N)-3	8	3.6(B)-31	8	3.8-7	8
3.9(N)-4	8	3.6(B)-32	8	3.8-8	8

Page No.	Rev. No.
3.8-9	8
3.8-10	8
3.8-11	8
3.8-12	8
3.8-13	8
3.8-14	8
3.8-15	8
3.8-16	8
3.8-17	8
3.8-18	8
3.8-19	8
3.8-20	8
3.8-21	8
3.8-22	8
3.8-23	8
3.8-24	8
3.8-25	8
3.8-26	8
3.8-27	8
3.8-28	8
3.8-29	8
3.8-30	8
3.8-31	8
3.8-32	8
3.8-33	8
3.8-34	8
3.8-35	8
3.8-36	8
3.8-37	8
3.9(N)-1	8
3.9(N)-2	8
3.9(N)-3	8
3.9(N)-4	8
3.9(N)-5	8
3.9(N)-6	8
3.9(N)-7	8
3.9(N)-8	8
3.9(N)-9	8
3.11-1	9
3A-1	8
3A-2	8
3A-3	8
CHAPTER 4	
Section 4.1	
1	10
2	10
3	10
Section 4.2	
1	18
2	18
3	18
4	18
5	18
6	18
7	18
8	18
9	18
10	18
11	18
12	18
13	18
14	18
15	18
16	18
17	18
18	18
19	18
20	18
21	18
22	18
23	18
24	18
25	18
26	18
27	18
28	18
29	18
30	18
31	18
32	18
33	18
34	18
35	18
36	18
37	18
38	18
39	18
40	18
Section 4.3	
1	19
2	19
3	19
4	19
5	19
6	19
7	19
8	19
9	19
10	19
11	19
12	19
13	19
14	19
15	19
16	19
17	19
18	19
19	19
20	19
21	19
22	19
23	19
24	19
25	19
26	19
27	19
28	19
29	19
30	19
31	19
32	19
33	19
34	19
35	19
36	19
37	19
38	19
39	19
40	19
41	19
Section 4.4	
1	17
2	17
3	17
4	17
5	17
6	17
7	17
8	17
9	17
10	17
11	17
12	17
13	17
14	17
15	17
16	17
17	17
18	17
19	17
20	17
21	17
22	17

Page No.	Rev. No.
23	17
24	17
25	17
26	17
27	17
28	17
29	17
30	17
31	17
32	17
33	17
34	17
35	17
36	17
37	17
38	17
39	17
40	17
41	17
42	17
43	17
44	17
45	17
46	17
Section 4.5	
1	8
2	8
Section 4.6	
1	13
2	13
3	13
Chapter 4 Tables	
4.1-1	8
4.1-2	10
4.1-3	8
4.3-1	17
4.3-2	15
4.3-3	8
4.3-4	8
4.3-5	10
4.4-1	10
4.4-2	10
Chapter 4 Figures	
4.2-1	8
4.2-2	8
4.2-2A	8
4.2-2B	8
4.2-3	9
4.2-3A	8
4.2-3B	17
4.2-4	8
4.2-5	8
4.2-6	8
4.2-6A	8
4.2-6B	8
4.2-7	8
4.2-8	8
4.2-9	8
4.2-9A	8
4.2-9B	8
4.2-10	8
4.2-10A	8
4.2-10B	8
4.2-11	8
4.2-12	8
4.2-13	8
4.2-14	18
4.2-14A	18
4.2-14B	18
4.2-15	8
4.3-1	8
4.3-2	8
4.3-3	8
4.3-4	8
4.3-5	8
4.3-6	8
4.3-7	8
4.3-8	8
4.3-9	8
4.3-10	8
4.3-11	8
4.3-12	8
4.3-13	8
4.3-14	8
4.3-15	8
4.3-16	8
4.3-17	8
4.3-21	8
4.3-22	8
4.3-23	8
4.3-24	8
4.3-25	8
4.3-26	8
4.3-27	8
4.3-28	8
4.3-29	8
4.3-30	8
4.3-31	8
4.3-32	8
4.3-33	8
4.3-34	8
4.3-35	8
4.3-36	8
4.3-37	8
4.3-38	8
4.3-39	8
4.3-40	8
4.3-41	8
4.3-42	8
4.3-43	8
4.4-1	8
4.4-2	8
4.4-3	8
4.4-4	8
4.4-6	8
4.4-7	17
CHAPTER 5	
Section 5.1	
1	13
2	13
3	13
4	13
5	13
6	13
Section 5.2	
1	18
2	18
3	18
4	18
5	18
6	18
7	18
8	18
9	18
10	18
11	18
12	18
13	18
14	18
15	18
16	18
17	18
18	18
19	18
20	18
21	18
22	18
23	18
24	18
25	18
26	18
27	18
28	18

Page No.	Rev. No.
29	18
30	18
31	18
32	18
33	18
34	18
35	18
36	18
37	18
38	18
Section 5.3	
1	18
2	18
3	18
4	18
5	18
6	18
7	18
8	18
9	18
10	18
11	18
12	18
13	18
14	18
15	18
16	18
17	18
18	18
19	18
20	18
Section 5.4	
1	19
2	19
3	19
4	19
5	19
6	19
7	19
8	19
9	19
10	19
11	19
12	19
13	19
14	19
15	19
16	19
17	19
18	19
19	19
20	19
21	19
22	19
23	19
24	19
25	19
26	19
27	19
28	19
29	19
30	19
31	19
32	19
33	19
34	19
35	19
36	19
37	19
38	19
39	19
40	19
41	19
42	19
43	19
44	19
45	19
46	19
47	19
48	19
49	19
50	19
51	19
52	19
53	19
54	19
55	19
56	19
57	19
58	19
59	19
60	19
61	19
62	19
63	19
64	19
65	19
66	19
67	19
68	19
69	19
70	19
71	19
72	19
73	19
74	19
Chapter 5 Tables	
5.1-1	12
5.2-1	8
5.2-2	12
5.2-3	8
5.2-4	8
5.2-6	8
5.2-7	8
5.2-8	8
5.3-1	8
5.3-2	8
5.3-3	18
5.3-4	8
5.3-5	11
5.3-6	11
5.4-1	10
5.4-2	8
5.4-3	10
5.4-4	8
5.4-5	8
5.4-6	8
5.4-7	10
5.4-8	8
5.4-9	8
5.4-10	8
5.4-11	8
5.4-12	8
5.4-13	8
5.4-14	8
5.4-15	8
5.4-16	8
5.4-17	9
Chapter 5 Figures	
5.1-1	8
5.1-2	11
5.1-3	11
5.1-4	11
5.1-5	8
5.2-1	8
5.2-2	8
5.3-1	8
5.4-1	8
5.4-2	8
5.4-3	8
5.4-4	8
5.4-5	8
5.4-6	8

Page No.	Rev. No.
5.4-7	8
5.4-8	8
5.4-9	8
5.4-10	11
5.4-11	8
5.4-12	8
5.4-13	8
5.4-14	8
5.4-15	8
5.4-16	8
5.4-17	8
5.4-18	8
5.4-19	8
CHAPTER 6	
Section 6.1(B)	
1	8
2	8
3	8
Section 6.1(N)	
1	8
2	8
3	8
Section 6.2	
1	19
2	19
3	19
4	19
5	19
6	19
7	19
8	19
9	19
10	19
11	19
12	19
13	19
14	19
15	19
16	19
17	19
18	19
19	19
20	19
21	19
22	19
23	19
24	19
25	19
26	19
27	19
28	19
29	19
30	19
31	19
32	19
33	19
34	19
35	19
36	19
37	19
38	19
39	19
40	19
41	19
42	19
43	19
44	19
45	19
46	19
47	19
48	19
49	19
50	19
51	19
52	19
53	19
54	19
55	19
56	19
57	19
58	19
59	19
60	19
61	19
62	19
63	19
64	19
65	19
66	19
67	19
68	19
69	19
70	19
71	19
72	19
73	19
74	19
75	19
76	19
77	19
78	19
79	19
80	19
81	19
82	19
83	19
84	19
85	19
86	19
87	19
88	19
89	19
90	19
91	19
92	19
93	19
94	19
95	19
96	19
97	19
98	19
99	19
Section 6.3	
1	15
2	15
3	15
4	15
5	15
6	15
7	15
8	15
9	15
10	15
11	15
12	15
13	15
14	15
15	15
16	15
17	15
18	15
19	15
20	15
21	15
22	15
23	15
24	15
25	15
26	15
27	15
28	15
29	15
30	15

Page No.	Rev. No.
31	15
32	15
33	15
34	15
35	15
Section 6.4	
1	13
2	13
3	13
4	13
5	13
6	13
7	13
8	13
9	13
10	13
11	13
12	13
13	13
14	13
15	13
16	13
Section 6.5	
1	15
2	15
3	15
4	15
5	15
6	15
7	15
8	15
9	15
10	15
11	15
12	15
13	15
14	15
15	15
16	15
17	15
18	15
19	15
20	15
Section 6.6	
1	13
2	13
3	13
4	13
Section 6.7	
1	8

Page No.	Rev. No.
Section 6.8	
1	19
2	19
3	19
4	19
5	19
6	19
7	19
8	19
9	19
Appendix 6A	
6A-1	8
6A-2	8
6A-3	8
6A-4	8
Chapter 6 Tables	
6.1(B)-1	8
6.1(B)-2	8
6.1(B)-4	8
6.1(N)-1	8
6.1(N)-2	8
6.2-1	8
6.2-2	8
6.2-3	8
6.2-4	10
6.2-5	8
6.2-6	8
6.2-7	8
6.2-8	10
6.2-9	10
6.2-10	8
6.2-11	8
6.2-12	9
6.2-13	10
6.2-14	10
6.2-15	10
6.2-16	8
6.2-30	8
6.2-31	8
6.2-32	8
6.2-33	8
6.2-34	8
6.2-35	8
6.2-36	8
6.2-37	10
6.2-38	10
6.2-39	10
6.2-40	10
6.2-41	10
6.2-42	10
6.2-43	10

Page No.	Rev. No.
6.2-44	10
6.2-45	10
6.2-46	10
6.2-47	10
6.2-48	10
6.2-49	10
6.2-50	10
6.2-51	10
6.2-52	10
6.2-53	10
6.2-54	10
6.2-55	10
6.2-56	10
6.2-57	10
6.2-58	10
6.2-59	10
6.2-60	10
6.2-61	10
6.2-62	10
6.2-63	10
6.2-64	10
6.2-65	10
6.2-66	10
6.2-67	10
6.2-68	10
6.2-69	10
6.2-69A	10
6.2-69B	10
6.2-75	13
6.2-76	8
6.2-77	12
6.2-78	12
6.2-79	12
6.2-80	8
6.2-81	8
6.2-82	10
6.2-83	14
6.2-84	8
6.2-85	8
6.2-86	8
6.2-87	12
6.2-88	11
6.2-89	10
6.2-90	8
6.2-91	8
6.2-92	8
6.3-1	12
6.3-2	8
6.3-3	15
6.3-4	8
6.3-5	15

Page No.	Rev. No.
6.3-6	8
6.3-7	15
6.3-8	8
6.3-9	10
6.4-1	18
6.5-1	8
6.5-2	8
6.5-3	13
6.5-4	8
6.5-5	8
6.5-6	8
6.5-7	8
6.5-8	8
6.8-1	8
6.8-2	8
Chapter 6 Figures	
6.2-1	8
6.2-2	8
6.2-3	8
6.2-4	8
6.2-5	8
6.2-6	8
6.2-7	8
6.2-8	8
6.2-9	8
6.2-10	8
6.2-11	8
6.2-12	8
6.2-13	8
6.2-14	8
6.2-15	8
6.2-16	8
6.2-17	8
6.2-18	8
6.2-19	8
6.2-20	8
6.2-21	8
6.2-22	8
6.2-23	8
6.2-24	8
6.2-25	8
6.2-26	8
6.2-27	8
6.2-29	8
6.2-30	8
6.2-31	8
6.2-32	8
6.2-33	8
6.2-34	8
6.2-35	8
6.2-36	8

Page No.	Rev. No.
6.2-37	8
6.2-38	8
6.2-39	8
6.2-40	8
6.2-41	8
6.2-42	8
6.2-54	8
6.2-55	8
6.2-56	8
6.2-57	8
6.2-58	8
6.2-59	8
6.2-60	8
6.2-69	8
6.2-70	8
6.2-71	8
6.2-74	11
6.2-75	8
6.2-76	8
6.2-77	8
6.2-78	12
6.2-79	12
6.2-80	8
6.2-81	8
6.2-82	8
6.2-83	8
6.2-84	8
6.2-85	8
6.2-86	8
6.2-87	8
6.2-88	8
6.2-89	10
6.2-90	8
6.2-91	13
6.2-92	8
6.2-94	8
6.2-95	8
6.2-96	8
6.2-97	8
6.3-1	8
6.3-2	8
6.3-3	11
6.3-4	11
6.3-5	8
6.3-6	14
6.3-7	8
6.3-8	8
6.3-9	8
6.3-10	8
6.4-1	8
6.4-2	8

Page No.	Rev. No.
6.8-1	11
6.8-2	9
6.8-3	8
CHAPTER 7	
Section 7.1	
1	19
2	19
3	19
4	19
5	19
6	19
7	19
8	19
9	19
10	19
11	19
12	19
13	19
14	19
15	19
16	19
17	19
18	19
19	19
20	19
21	19
22	19
23	19
24	19
25	19
26	19
27	19
28	19
29	19
30	19
31	19
32	19
33	19
34	19
Section 7.2	
1	18
2	18
3	18
4	18
5	18
6	18
7	18
8	18
9	18
10	18
11	18

Page No.	Rev. No.
12	18
13	18
14	18
15	18
16	18
17	18
18	18
19	18
20	18
21	18
22	18
23	18
24	18
25	18
26	18
27	18
28	18
29	18
30	18
31	18
32	18
33	18
34	18
35	18
36	18
37	18
38	18
39	18
40	18
41	18
42	18
Section 7.3	
1	19
2	19
3	19
4	19
5	19
6	19
7	19
8	19
9	19
10	19
11	19
12	19
13	19
14	19
15	19
16	19
17	19
18	19
19	19
20	19
21	19
22	19
23	19
24	19
25	19
26	19
27	19
28	19
29	19
30	19
31	19
Section 7.4	
1	15
2	15
3	15
4	15
5	15
6	15
7	15
8	15
9	15
Section 7.5	
1	9
2	9
3	9
4	9
5	9
6	9
7	9
8	9
9	9
10	9
11	9
12	9
Section 7.6	
1	12
2	12
3	12
4	12
5	12
6	12
7	12
8	12
9	12
10	12
11	12
Section 7.7	
1	19
2	19
3	19
4	19
5	19
6	19
7	19
8	19
9	19
10	19
11	19
13	19
12	19
14	19
15	19
16	19
17	19
18	19
19	19
20	19
21	19
22	19
23	19
24	19
25	19
26	19
Appendix 7A	
7A-1	17
7A-2	17
7A-3	17
7A-4	17
7A-5	17
7A-6	17
7A-7	17
7A-8	17
7A-9	17
7A-10	17
7A-11	17
7A-12	17
7A-13	17
7A-14	17
7A-15	17
7A-16	17
7A-17	17
7A-18	17
7A-19	17
7A-20	17
7A-21	17
7A-22	17
7A-23	17
7A-24	17
7A-25	17
7A-26	17
7A-27	17

Page No.	Rev. No.
7A-28	17
7A-29	17
7A-30	17
7A-31	17
7A-32	17
Chapter 7 Tables	
7.1-1	8
7.2-1	9
7.2-2	8
7.2-3	19
7.2-4	17
7.3-1	8
7.3-2	8
7.4-1	15
7.5-1	17
7.5-2	10
7.7-1	12
Chapter 7 Figures	
7.1-1	8
7.1-2	8
7.2-1	8
7.2-2	8
7.2-3	9
7.2-4	8
7.2-5	12
7.2-6	8
7.2-7	8
7.2-8	8
7.2-9	11
7.2-10	8
7.2-11	9
7.2-12	8
7.2-13	8
7.2-14	8
7.2-15	12
7.2-16	8
7.3-1	8
7.3-2	8
7.6-1	8
7.6-2	8
7.6-3	8
7.6-4	8
7.6-5	8
7.6-6	17
7.6-7	8
7.7-1	8
7.7-2	12
7.7-3	8
7.7-4	8
7.7-5	8
7.7-6	8
7.7-7	12
7.7-8	8
7.7-9	19
7.7-14	8
7.7-15	9
CHAPTER 8	
Section 8.1	
1	18
2	18
3	18
4	18
5	18
6	18
7	18
8	18
9	18
10	18
11	18
12	18
13	18
14	18
15	18
16	18
17	18
18	18
19	18
20	18
21	18
Section 8.2	
1	19
2	19
3	19
4	19
5	19
6	19
7	19
8	19
9	19
10	19
11	19
12	19
13	19
14	19
15	19
16	19
17	19
18	19
19	19
20	19
21	19
22	19
23	19
24	19
25	19
26	19
27	19
28	19
29	19
Section 8.3	
1	19
2	19
3	19
4	19
5	19
6	19
7	19
8	19
9	19
10	19
11	19
12	19
13	19
14	19
15	19
16	19
17	19
18	19
19	19
20	19
21	19
22	19
23	19
24	19
25	19
26	19
27	19
28	19
29	19
30	19
31	19
32	19
33	19
34	19
35	19
36	19
37	19
38	19
39	19
40	19
41	19
42	19
43	19

Page No.	Rev. No.
44	19
45	19
46	19
47	19
48	19
49	19
50	19
51	19
52	19
53	19
54	19
55	19
56	19
57	19
58	19
59	19
60	19
61	19
62	19
63	19
64	19
65	19
66	19
67	19
68	19
69	19
70	19
71	19
72	19
73	19
74	19
75	19
76	19
77	19
78	19
79	19
80	19
Section 8.4	
1	14
2	14
3	14
Appendix 8A	
8A-1	8
8A-2	8
8A-3	8
8A-4	8
8A-5	8
8A-6	8
8A-7	8
8A-8	8

Page No.	Rev. No.
Chapter 8 Tables	
8.1-1	8
8.2-1	19
8.3-1	19
8.3-2	19
8.3-3	10
8.3-4	8
8.3-5	19
8.3-6	8
8.3-7	8
8.3-8	16
8.3-9	8
8.3-10	8
Chapter 8 Figures	
8.1-1	11
8.2-1	14
8.2-2	14
8.2-3	14
8.2-4	8
8.2-5	18
8.2-6	13
8.2-7	8
8.2-8	8
8.2-9	8
8.2-10	18
8.2-11	9
8.3-1	11
8.3-2	8
8.3-3	16
8.3-4	8
8.3-5	8
8.3-6	8
8.3-7	11
8.3-8	9
8.3-9	8
8.3-10	9
8.3-11	8
8.3-12	8
8.3-13	8
8.3-14	8
8.3-15	8
8.3-16	11
8.3-17	11
8.3-18	8
8.3-19	8
8.3-20	11
8.3-21	8
8.3-22	11
8.3-23	8
8.3-24	8
8.3-25	11

Page No.	Rev. No.
8.3-26	8
8.3-27	8
8.3-28	8
8.3-29	8
8.3-30	8
8.3-31	8
8.3-32	16
8.3-33	16
8.3-34	8
8.3-35	8
8.3-36	8
8.3-37	8
8.3-38	8
8.3-39	8
8.3-40	11
8.3-41	8
8.3-42	8
8.3-43	8
8.3-44	8
8.3-45	8
8.3-46	8
8.3-47	8
8.3-48	8
8.3-49	8
8.3-50	8
8.3-51	8
8.3-52	11
8.3-53	8
8.3-54	9
8.3-55	8
8.3-56	8
8.3-57	8
8.3-58	8
8.3-59	8
8.3-60	11
8.3-61	8
8A-4.0	8
8A-5.1	8
8A-5.2	8
8A-5.3	8
8A-5.4	8
CHAPTER 9	
Section 9.1	
1	18
2	18
3	18
4	18
5	18
6	18
7	18
8	18

Page No.	Rev. No.	Page No.	Rev. No.	Page No.	Rev. No.
9	18	4	19	5	17
10	18	5	19	6	17
11	18	6	19	7	17
12	18	7	19	8	17
13	18	8	19	9	17
14	18	9	19	10	17
15	18	10	19	11	17
16	18	11	19	12	17
17	18	12	19	13	17
18	18	13	19	14	17
19	18	14	19	15	17
20	18	15	19	16	17
21	18	16	19	17	17
22	18	17	19	18	17
23	18	18	19	19	17
24	18	19	19	20	17
25	18	20	19	21	17
26	18	21	19	22	17
27	18	22	19	23	17
28	18	23	19	24	17
29	18	24	19	25	17
30	18	25	19	26	17
31	18	26	19	27	17
32	18	27	19	28	17
33	18	28	19	29	17
34	18	29	19	30	17
35	18	30	19	31	17
36	18	31	19	32	17
37	18	32	19	33	17
38	18	33	19	34	17
39	18	34	19	35	17
40	18	35	19	36	17
41	18	36	19	37	17
42	18	37	19	38	17
43	18	38	19	39	17
44	18	39	19	40	17
45	18	40	19	41	17
46	18	41	19	42	17
47	18	42	19	43	17
48	18	43	19	44	17
49	18	44	19	45	17
50	18	45	19	46	17
51	18	46	19	47	17
52	18	47	19	48	17
53	18	48	19	49	17
54	18	49	19	50	17
55	18	**Section 9.3**		51	17
Section 9.2		1	17	52	17
1	19	2	17	53	17
2	19	3	17	54	17
3	19	4	17	55	17

Page No.	Rev. No.	Page No.	Rev. No.	Page No.	Rev. No.
56	17	20	19	6	19
57	17	21	19	7	19
58	17	22	19	8	19
59	17	23	19	9	19
60	17	24	19	10	19
61	17	25	19	11	19
62	17	26	19	12	19
63	17	27	19	13	19
64	17	28	19	14	19
65	17	29	19	15	19
66	17	30	19	16	19
67	17	31	19	17	19
68	17	32	19	18	19
69	17	33	19	19	19
70	17	34	19	20	19
71	17	35	19	21	19
72	17	36	19	22	19
73	17	37	19	23	19
74	17	38	19	24	19
75	17	39	19	25	19
76	17	40	19	26	19
77	17	41	19	27	19
78	17	42	19	28	19
79	17	43	19	29	19
80	17	44	19	30	19
81	17	45	19	31	19
82	17	46	19	32	19
83	17	47	19	33	19
84	17	48	19	34	19
85	17	49	19	35	19
86	17	50	19	36	19
Section 9.4		51	19	37	19
1	19	52	19	38	19
2	19	53	19	39	19
3	19	54	19	40	19
4	19	55	19	41	19
5	19	56	19	42	19
6	19	57	19	43	19
7	19	58	19	44	19
8	19	59	19	45	19
9	19	60	19	46	19
10	19	61	19	47	19
11	19	62	19	48	19
12	19	63	19	49	19
13	19	64	19	50	19
14	19	**Section 9.5**		51	19
15	19	1	19	**Chapter 9 Tables**	
16	19	2	19	9.1-1	10
17	19	3	19	9.1-2	13
18	19	4	19	9.1-3	10
19	19	5	19	9.1-7	13

Page No.	Rev. No.	Page No.	Rev. No.	Page No.	Rev. No.
9.2-1	14	9.4-23	8	9.3-6	11
9.2-2	8	9.5-1	10	9.3-7	8
9.2-3	8	9.5-2	13	9.3-8	11
9.2-4	10	9.5-3	15	9.3-9	11
9.2-5	10	9.5-4	8	9.3-10	8
9.2-6	13	9.5-5	8	9.3-11	8
9.2-7	8	9.5-6	8	9.3-12	8
9.2-8	8	9.5-7	8	9.3-13	8
9.2-9	8	9.5-8	8	9.3-14	8
9.2-10	10	9.5-9	16	9.3-15	11
9.2-11	8	**Chapter 9 Figures**		9.3-16	8
9.2-12	8	9.1-1	8	9.3-17	8
9.2-13	10	9.1-2	8	9.3-18	8
9.2-14	8	9.1-3	8	9.3-19	8
9.2-15	14	9.1-4	8	9.3-20	8
9.2-16	8	9.1-5	8	9.3-21	11
9.3-1	8	9.1-6	8	9.3-22	8
9.3-2	8	9.1-7	12	9.3-23	9
9.3-3	12	9.1-8	8	9.3-24	11
9.3-4	8	9.1-9	8	9.3-25	11
9.3-5	8	9.1-10	8	9.3-26	8
9.3-6	12	9.1-11	14	9.3-27	11
9.3-7	15	9.1-12	8	9.3-28	11
9.3-8	8	9.1-13	17	9.3-29	11
9.3-9	8	9.1-14	17	9.3-30	9
9.3-10	8	9.1-15	17	9.3-31	8
9.3-11	8	9.1-16	17	9.3-32	11
9.4-1	8	9.1-17	17	9.3-33	11
9.4-1A	8	9.1-18	17	9.3-34	8
9.4-2	8	9.1-19	8	9.3-35	8
9.4-3	13	9.1-20	8	9.3-36	11
9.4-4	8	9.1-21	8	9.3-37	11
9.4-5	13	9.1-22	17	9.3-38	11
9.4-6	8	9.2-1	8	9.3-39	8
9.4-7	8	9.2-2	11	9.3-40	8
9.4-8	13	9.2-3	8	9.3-41	8
9.4-9	8	9.2-4	11	9.3-42	8
9.4-10	8	9.2-5	8	9.4-1	8
9.4-11	8	9.2-6	11	9.4-2	11
9.4-12	8	9.2-7	8	9.4-3	8
9.4-13	8	9.2-9	8	9.4-4	8
9.4-14	8	9.2-10	8	9.4-5	8
9.4-15	8	9.2-11	8	9.4-6	8
9.4-16	16	9.2-12	9	9.4-7	11
9.4-17	13	9.2-13	11	9.4-8	9
9.4-17A	8	9.2-15	11	9.4-9	8
9.4-18	8	9.3-1	9	9.4-10	8
9.4-19	12	9.3-2	11	9.4-11	8
9.4-20	8	9.3-3	8	9.4-12	8
9.4-21	8	9.3-4	8	9.4-13	8
9.4-22	13	9.3-5	9	9.4-14	9

Page No.	Rev. No.
9.4-15	9
9.4-16	11
9.4-17	8
9.4-18	8
9.4-19	11
9.4-20	8
9.4-21	9
9.4-22	8
9.4-23	9
9.4-24	11
9.4-25	8
9.5-1	9
9.5-2	11
9.5-4	8
9.5-5	9
9.5-6	11
9.5-7	11
9.5-8	11
9.5-9	9
9.5-10	8
9.5-11	16
9.5-12	16
9.5-13	11
9.5-14	11
CHAPTER 10	
Section 10.1	
1	13
2	13
Section 10.2	
1	13
2	13
3	13
4	13
5	13
6	13
7	13
8	13
9	13
10	13
11	13
12	13
Section 10.3	
1	19
2	19
3	19
4	19
5	19
6	19
7	19
8	19
9	19
10	19
11	19
12	19
Section 10.4	
1	19
2	19
3	19
4	19
5	19
6	19
7	19
8	19
9	19
10	19
11	19
12	19
13	19
14	19
15	19
16	19
17	19
18	19
19	19
20	19
21	19
22	19
23	19
24	19
25	19
26	19
27	19
28	19
29	19
30	19
31	19
32	19
33	19
34	19
35	19
36	19
37	19
38	19
39	19
40	19
41	19
42	19
43	19
44	19
45	19
46	19
47	19
48	19
49	19
50	19
51	19
52	19
53	19
54	19
55	19
56	19
Chapter 10 Tables	
10.4-1	11
10.4-2	8
10.4-3	8
10.4-4	11
Chapter 10 Figures	
10.1-1	11
10.1-2	11
10.2-1	8
10.3-1	8
10.3-2	11
10.3-3	11
10.3-4	11
10.3-5	9
10.3-6	11
10.3-7	8
10.3-8	11
10.3-9	9
10.3-10	8
10.3-11	8
10.4-1	9
10.4-2	9
10.4-3	8
10.4-4	11
10.4-5	8
10.4-6	8
10.4-7	11
10.4-8	11
10.4-9	11
10.4-10	9
10.4-11	8
10.4-12	8
10.4-13	9
10.4-14	11
10.4-15	8
10.4-16	8
10.4-17	8
10.4-18	11
10.4-19	11
CHAPTER 11	
Section 11.1	
1	11

Page No.	Rev. No.
2	11
3	11
4	11
5	11
6	11
7	11
8	11
9	11
Section 11.2	
1	14
2	14
3	14
4	14
5	14
6	14
7	14
8	14
9	14
10	14
11	14
12	14
13	14
14	14
15	14
Section 11.3	
1	10
2	10
3	10
4	10
5	10
6	10
7	10
8	10
9	10
10	10
11	10
12	10
Section 11.4	
1	14
2	14
3	14
4	14
5	14
6	14
7	14
8	14
9	14
10	14
11	14
12	14
13	14
14	14
15	14
16	14
17	14
18	14
19	14
20	14
Section 11.5	
1	13
2	13
3	13
4	13
5	13
6	13
7	13
8	13
9	13
10	13
Appendix 11A	
1	10
2	10
3	10
4	10
5	10
6	10
7	10
8	10
9	10
10	10
11	10
12	10
Chapter 11 Tables	
11.1-1	10
11.1-2	10
11.1-3	10
11.1-4	10
11.1-5	10
11.2-1	8
11.2-2	10
11.2-3	10
11.2-4	10
11.2-5	10
11.2-6	10
11.2-7	10
11.2-8	10
11.2-9	10
11.2-10	10
11.2-11	10
11.3-1	8
11.3-2	10
11.3-3	10
11.3-4	10
11.3-5	10
11.3-6	10
11.3-7	10
11.3-8	10
11.3-9	10
11.4-1	8
11.4-2	8
11.4-3	10
11.4-4	10
11.4-5	10
11.4-6	10
11.4-7	10
11.4-8	8
11.4-9	8
11.4-10	10
11.5-1	13
11.5-2	13
11.5-3	11
11A-1	11
11A-2	8
11A-3	8
11A-4	8
Chapter 11 Figures	
11.2-1	8
11.2-2	11
11.2-3	8
11.2-4	8
11.2-5	11
11.3-1	8
11.3-2	11
11.3-3	8
11.3-4	8
11.3-5	8
11.4-1	8
11.4-2	8
11.4-3	8
11.4-4	8
11.4-5	8
11.4-6	9
11.4-7	8
11.4-8	8
11.4-9	8
11.4-10	9
11.4-11	8
11.5-1	9
11A-1	8
11A-2	8
11A-3	8
11A-4	8

Page No.	Rev. No.
CHAPTER 12	
Section 12.1	
1	9
2	9
3	9
4	9
5	9
6	9
7	9
8	9
9	9
10	9
11	9
12	9
13	9
14	9
15	9
16	9
Section 12.2	
1	13
2	13
3	13
4	13
5	13
6	13
7	13
8	13
9	13
10	13
11	13
12	13
13	13
14	13
15	13
16	13
17	13
18	13
19	13
Section 12.3	
1	15
2	15
3	15
4	15
5	15
6	15
7	15
8	15
9	15
10	15
11	15
12	15
13	15
14	15
15	15
16	15
17	15
18	15
19	15
20	15
21	15
22	15
23	15
24	15
25	15
26	15
27	15
28	15
29	15
Section 12.4	
1	10
2	10
3	10
4	10
5	10
6	10
Section 12.5	
1	19
2	19
3	19
4	19
5	19
6	19
7	19
8	19
9	19
10	19
11	19
Chapter 12 Tables	
12.2-1	10
12.2-2	10
12.2-3	10
12.2-4	10
12.2-5	12
12.2-6	8
12.2-7	10
12.2-8	8
12.2-9	10
12.2-10	8
12.2-11	10
12.2-12	8
12.2-13	10
12.2-14	8
12.2-15	10
12.2-16	8
12.2-17	10
12.2-18	8
12.2-19	10
12.2-20	8
12.2-21	10
12.2-22	10
12.2-23	8
12.2-24	10
12.2-25	8
12.2-26	10
12.2-27	10
12.2-28	8
12.2-29	10
12.2-30	8
12.2-31	10
12.2-32	10
12.2-33	10
12.2-34	10
12.2-35	10
12.2-36	13
12.2-37	10
12.3-1	8
12.3-2	8
12.3-3	8
12.3-4	8
12.3-5	8
12.3-6	8
12.3-7	8
12.3-8	8
12.3-9	8
12.3-10	8
12.3-11	8
12.3-12	8
12.3-13	8
12.3-14	13
12.3-15	13
12.3-16	8
12.4-1	8
12.4-2	8
12.4-3	8
12.4-4	8
12.4-5	8
12.4-6	8
12.4-7	8
12.5-1	19
12.5-2	10
Chapter 12 Figures	
12.3-1	8
12.3-2	8

Page No.	Rev. No.
12.3-3	8
12.3-4	8
12.3-5	8
12.3-6	8
12.3-7	8
12.3-8	8
12.3-9	8
12.3-10	8
12.3-11	8
12.3-12	8
12.3-13	8
12.3-14	8
12.3-15	8
12.3-16	8
12.3-17	8
12.3-18	8
12.3-19	9
12.3-20	8
CHAPTER 13	
Section 13.1	
1	18
2	18
3	18
4	18
5	18
6	18
7	18
8	18
Section 13.2	
1	17
2	17
3	17
4	17
5	17
6	17
7	17
8	17
9	17
10	17
11	17
12	17
13	17
14	17
Section 13.3	
1	12
Section 13.4	
1	11
Section 13.5	
1	15
Section 13.6	
1	8
Appendix 13A	
13A-1	8
13A-2	8
Chapter 13 Tables	
13.5-2	13
Chapter 13 Figures	
13.5-1	8
13A-1	8
13A-2	8
CHAPTER 14	
Section 14.1	
1	8
Section 14.2	
1	8
2	8
3	8
4	8
5	8
6	8
7	8
8	8
9	8
10	8
11	8
12	8
13	8
14	8
15	8
Chapter 14 Tables	
14.2-1	8
14.2-2	8
14.2-3	8
14.2-4	8
14.2-5	15
CHAPTER 15	
Section 15.0	
1	17
2	17
3	17
4	17
5	17
6	17
7	17
8	17
9	17
10	17
11	17
12	17
13	17
14	17
15	17
16	17
17	17
18	17
Section 15.1	
1	12
2	12
3	12
4	12
5	12
6	12
7	12
8	12
9	12
10	12
11	12
12	12
13	12
14	12
15	12
16	12
17	12
18	12
19	12
20	12
21	12
Section 15.2	
1	17
2	17
3	17
4	17
5	17
6	17
7	17
8	17
9	17
10	17
11	17
12	17
13	17
14	17
15	17
16	17
17	17
18	17
19	17
20	17
21	17
22	17
Section 15.3	
1	17
2	17

Page No.	Rev. No.
3	17
4	17
5	17
6	17
7	17
8	17
9	17
10	17
11	17
12	17
13	17
14	17
15	17
16	17
Section 15.4	
1	17
2	17
3	17
4	17
5	17
6	17
7	17
8	17
9	17
10	17
11	17
12	17
13	17
14	17
15	17
16	17
17	17
18	17
19	17
20	17
21	17
22	17
23	17
24	17
25	17
26	17
27	17
28	17
29	17
30	17
31	17
32	17
33	17
34	17
35	17
36	17

Page No.	Rev. No.
37	17
38	17
39	17
40	17
41	17
42	17
43	17
44	17
45	17
46	17
Section 15.5	
1	11
2	11
3	11
4	11
5	11
6	11
7	11
8	11
Section 15.6	
1	17
2	17
3	17
4	17
5	17
6	17
7	17
8	17
9	17
10	17
11	17
12	17
13	17
14	17
15	17
16	17
17	17
18	17
19	17
20	17
21	17
22	17
23	17
24	17
25	17
26	17
27	17
28	17
29	17
30	17
31	17

Page No.	Rev. No.
32	17
33	17
34	17
35	17
36	17
37	17
38	17
39	17
40	17
41	17
42	17
43	17
44	17
45	17
46	17
47	17
48	17
49	17
Section 15.7	
1	19
2	19
3	19
4	19
5	19
6	19
7	19
8	19
9	19
10	19
11	19
12	19
13	19
14	19
15	19
16	19
17	19
18	19
Section 15.8	
1	11
2	11
Section 15.9	
1	8
Appendix 15A	
15A-1	10
15A-2	10
15A-3	10
Appendix 15B	
15B-1	10
15B-2	10
15B-3	10
15B-4	10

Page No.	Rev. No.
15B-5	10
15B-6	10
15B-7	10
15B-8	10
15B-9	10
15B-10	10
15B-11	10
15B-12	10
Appendix 15C	
15C-1	19
15C-2	19
15C-3	19
15C-4	19
15C-5	19
15C-6	19
15C-7	19
15C-8	19
15C-9	19
Chapter 15 Tables	
15.0-1	10
15.0-2	10
15.0-3	10
15.0-4	19
15.0-5	9
15.0-6	10
15.0-7	10
15.0-8	10
15.1-1	10
15.1-2	10
15.1-3	10
15.1-4	10
15.1-5	10
15.1-6	10
15.1-7	10
15.2-1	17
15.3-1	19
15.3-2	17
15.3-3	10
15.3-4	10
15.3-5	10
15.4-1	12
15.4-2	10
15.4-3	10
15.4-4	10
15.4-5	10
15.5-1	11
15.5-2	10
15.6-1	10
15.6-2	10
15.6-3	10
15.6-4	10

Page No.	Rev. No.
15.6-5	10
15.6-6	10
15.6-7	10
15.6-8	10
15.6-9	10
15.6-10	10
15.6-11	10
15.6-12	10
15.6-13	17
15.6-15	10
15.6-16	10
15.6-17	10
15.6-18	10
15.6-19	10
15.6-20	10
15.6-26	10
15.6-27	10
15.6-28	10
15.6-29	17
15.6-30	10
15.6-31	10
15.6-32	16
15.6-33	17
15.6-34	10
15.6-35	10
15.7-1	8
15.7-2	10
15.7-3	10
15.7-4	10
15.7-7	10
15.7-8	10
15.7-9	10
15.7-14	10
15.7-16	8
15.7-17	8
15.7-18	10
15.7-19	19
15.7-20	19
15.7-21	19
15.7-26	10
15.7-27	10
15.7-28	10
15A-1	10
15B-1	10
15B-2	10
15B-3	10
15B-4	10
15B-5	10
15B-6	10
15C-1	10
15C-2	18

Page No.	Rev. No.
15C-2-1	18
15C-2-2	10
15C-3	10
15C-4	10
15C-5	19
15C-6	10
Chapter 15 Figures	
15.0-1	8
15.0-2	8
15.0-4	8
15.0-5	8
15.0-6	8
15.0-7	8
15.0-8	8
15.0-9	8
15.0-10	8
15.0-11	8
15.0-12	8
15.0-13	8
15.0-14	8
15.0-15	8
15.0-16	8
15.0-18	8
15.0-20	8
15.0-21	8
15.0-22	8
15.0-23	8
15.0-24	8
15.0-25	8
15.0-26	8
15.0-27	8
15.0-28	8
15.0-29	8
15.0-30	8
15.0-31	8
15.0-32	8
15.1-1	12
15.1-6	9
15.2-1	17
15.2-5	17
15.2-6	9
15.2-7	9
15.3-1	12
15.3-2	12
15.3-3	19
15.3-4	19
15.3-5	19
15.3-6	12
15.4-1	8
15.4-2	8
15.4-3	8

Page No.	Rev. No.
15.4-4	12
15.4-5	12
15.4-6	12
15.4-7	12
15.4-8	12
15.4-9	9
15.4-10	9
15.4-11	9
15.5-1	11
15.5-2	8
15.6-1	8
15.6-2	8
15.6-3	8
15.6-4	8
15.6-5	8
15.6-6	8
15.6-7	8
15.6-8	8
15.6-9	8
15.6-10	8
15.6-11	8
15.6-12	8
15.6-13	8
15.6-14	8
15.6-15	8
15.6-16	8
15.6-17	8
15.6-18	8
15.6-19	8
15.6-20	8
15.6-21	8
15.6-34	8
15.6-35	8
15.6-36	8
15.6-37	8
15.6-38	8
15.6-39	8
15.6-40	8
15.6-41	8
15.6-42	8
15.6-43	8
15.6-44	8
15.6-45	8
15.6-49	8
15.6-50	12
15.6-51	12
15.6-52	12
15.6-53	12
15.6-54	12
15.6-55	12
15.6-56	12
15.6-57	12
15.6-58	12
15.6-59	12
15.6-60	12
CHAPTER 16	
Section 16.1	
1	8
Section 16.2	
1	8
Section 16.3	
1	11
CHAPTER 17	
Section 17.1	
1	15
2	15
3	15
4	15
5	15
6	15
7	15
8	15
9	15
10	15
11	15
12	15
13	15
14	15
15	15
16	15
17	15
18	15
19	15
20	15
21	15
22	15
23	15
24	15
25	15
26	15
27	15
28	15
29	15
30	15
31	15
32	15
33	15
34	15
35	15
36	15
37	15
38	15
39	15
40	15
41	15
42	15
43	15
44	15
Section 17.2	
1	11
Appendix 17A	
1	11
Appendix 17B	
1	8
Appendix 17C	
1	11
Appendix 17D	
1	11
Chapter 17 Tables	
17.1-1	8
17.1-2	8
17.1-3	8
17.1-4	8
17.1-5	8
Chapter 17 Figures	
17.1-1	8
17.1-2	8

SEABROOK STATION
UPDATED FINAL SAFETY ANALYSIS REPORT

CHAPTER 1
INTRODUCTION AND GENERAL DESCRIPTION OF PLANT

SECTIONS

1.1	Introduction
1.2	General Plant Description
1.3	Comparison Tables
1.4	Identification of Agents and Contractors
1.5	Requirements for Further Technical Information
1.6	Material Incorporated by Reference
1.7	Drawings and Other Detailed Information
1.8	Conformance to NRC Regulatory Guides
1.9	Compliance with NUREG 0737: Clarification of TMI Action Plan Requirements

1.1 INTRODUCTION

1.1.1 Project Identification

The Updated Final Safety Analysis Report (UFSAR) for Seabrook Station is submitted to the U.S. Nuclear Regulatory Commission (NRC) pursuant to 10 CFR 50.71(e). The original FSAR (as amended through Amendment 63, April 11, 1990) submitted in support of the operating license application documents the licensing basis for Seabrook Station and has been archived. A full power operating license for NPF-86 was issued by the NRC on March 15, 1990. The NRC previously issued a low power license, NPF-67, on May 26, 1989, and a fuel load license, NPF-56, on October 17, 1986. The Updated FSAR submittal date was based on the date of issuance of low power license NPF-67. The Updated FSAR is revised annually (per refueling cycle), pursuant to 10 CFR 50.71(e). On January 10, 2007, the NRC issued Certificate of Compliance No. 1030 for Spent Fuel Storage Casks, which allows Seabrook Station to operate an Independent Spent Fuel Storage Installation (ISFSI) utilizing the HUHOMS® HD System. The HUHOMS® HD System Updated Final Safety Analysis Report for the 32PTH Cask is updated annually under 10 CFR 72.70 by the certificate holder.

Seabrook Station is located approximately eight miles southeast of the county seat of Exeter and five miles northeast of Amesbury, Massachusetts. The center of the Boston metropolitan area is approximately 40 miles to the southeast of the site.

Seabrook Station employs a four-loop, pressurized water reactor and support auxiliary systems designed by Westinghouse Electric Company. It is similar in design to Duke Power Company's W.B. McGuire Nuclear Station, Texas Utility Generating Company's Comanche Peak Station, and Commonwealth Edison Company's Byron-Braidwood Nuclear Plants.

Seabrook Station's reactor is housed in a steel-lined reinforced concrete containment structure and a concrete containment enclosure structure. These structures were designed by United Engineers and Constructors Inc.

The operating license application and original FSAR for Seabrook Station contemplated two identical units on a single site. Construction on Seabrook Station Unit 2 was effectively terminated in 1984 and its construction permit was allowed to expire in October 1988. The Updated FSAR eliminates all references to Unit 2, except for a few cases where it was necessary to maintain a Unit 2 reference to provide an accurate description of a plant feature (i.e., the Exclusion Area Boundary is based on two units as the Updated FSAR description so states).

NPF-86 authorizes Seabrook Station operation at reactor core power levels not in excess of 3648 megawatts thermal (MWt). This corresponds to a nuclear steam supply system thermal output of 3664.1 MWt and a corresponding gross turbine generator output of 1305.6 MWe. Seabrook Station commenced regular full power operation on August 19, 1990, upon completion of the Power Ascension Test Program.

1.1.2 Organization of Contents

The Updated Final Safety Analysis Report (UFSAR) provides the information required by Revision 3 to the "Standard Format and Content of Safety Analysis Reports for Nuclear Power Plants," Regulatory Guide 1.70, dated November, 1978. The Updated FSAR is divided into 17 chapters, using substantially the same format as NUREG-75/094.

In 2002, the UFSAR was converted to a computer based living document, periodically updated throughout the reporting cycle. Available on the Seabrook Station Home Page in Portable Document Format (PDF), the UFSAR is viewed using computer software and is available in CD-ROM for distribution to offsite agencies. Changes to the living UFSAR will be identified with a revision bar and the associated UFSAR change number.

Sections are numerically identified by representing their order of appearance in a chapter by two numbers separated by a decimal point, e.g., 3.4, the fourth section of Chapter 3. Subsections are further identified by numbers separated by decimal points (3.4.1, 3.4.1.1., etc.). Pages within each section are consecutively numbered (3.4-1, 3.4-2, etc.).

Tabulations of data are designated "Tables," and are identified by the section number followed by a hyphen and the number of the table according to its order of mention in the test, e.g., Table 3.4-5 is the fifth table of Section 3.4.

Drawings, pictures, sketches, curves, graphs and engineering diagrams are identified as "Figures," and are numbered in the same manner as tables.

The symbols applicable to the piping and instrumentation diagrams (P&IDs) and logic diagrams throughout this report are presented in Figure 1.1-1 and Figure 1.1-2.

A cross-reference tabulation, Table 1.1-1 is provided to help the reader establish correspondence between Updated FSAR figure numbers, original FSAR figure numbers, and design drawing numbers. Those UFSAR Figures listed in Table 1.1-1 as historical were accurate at the time Seabrook Station was originally licensed, but were not intended or expected to be updated for the life of the plant. The information contained in historical UFSAR figures does not directly affect Seabrook Station operations, but design changes are tracked to support design control and configuration management activities. Use of this cross-reference will facilitate the tracing of piping and cabling between different P&IDs. Design drawing numbers are used in the UFSAR in lieu of copies of the actual drawing to ensure the user will use the latest drawing. Figures that were prepared specifically for the Updated FSAR have not been included in this table.

Where information has been presented that is not specifically requested by the standard format, the information is presented in the appropriate chapter as a section or subsection, and follows the information specifically requested by the standard format. For example, this Subsection 1.1.2 is not requested by the standard format. Since it apparently belongs in Section 1.1, it has been placed after the subsection containing the information specifically requested by the standard format.

When it becomes necessary to submit additional information, or revise information presently contained in the Updated FSAR, the following procedures will be followed:

a. When a change is made to the Updated FSAR text, those page sections affected will be marked with the revision number in the upper right-hand corner and a revision bar added in the margin next to the material affected.

b. When figures are revised, the Updated FSAR revision number is added to the list of effective pages prior to submittal to the NRC.

For those sections where both the AE and the NSSS supplier have provided separate discussions on similar subject matter, e.g., Section 3.9, the discussion prepared by the AE is identified by a "(B)" directly after the 2-digit subsection number, e.g., 3.9(B), whereas the discussion provided by the NSSS supplier is identified with an "(N)" following the number, e.g., 3.9(N).

1.1.3 Transition of Information from the Original FSAR to the Updated FSAR

The Final Safety Analysis Report (FSAR) for Seabrook Station was revised pursuant to the requirements of 10 CFR 50.71(e). Development of the Updated FSAR was completed in accordance with guidance provided in Generic Letter 81-06, dated February 26, 1981 and information provided in the statements of Consideration for Final Rule Making of 10 CFR Part 50, titled "Periodic Updating of Final Safety Analysis Reports", dated September 1, 1982.

The format of the Updated FSAR is consistent with the original FSAR with the following exceptions:

- The original FSAR contained two volumes of Requests for Additional Information (RAIs) and their subsequent responses. The RAIs were the result of the Commission's questions pertaining to New Hampshire Yankee's (NHY) application for an Operating License. Information from the RAIs has been incorporated into the Updated FSAR, as applicable, and thus will not be a part of the Updated FSAR.
- In response to guidance given in Generic Letter 81-06 and the statements of Consideration, certain population tables contained in Chapter 2 were not updated. These tables are presented with existing information from the original FSAR because the most current population figures are provided in the Seabrook Station Evacuation Study transmitted as a supporting document to New Hampshire Radiological Emergency Response Plan (NHRERP).
- Additionally, certain appendices, identified by asterisks, on the List of Effective Pages were not revised, but have been extracted from the original FSAR and are provided in the Updated FSAR for historical information.

1.2 GENERAL PLANT DESCRIPTION

1.2.1 Site Characteristics

1.2.1.1 Location

Seabrook Station is located on the western shore of Hampton Harbor in Rockingham County, in the township of Seabrook, New Hampshire. It is approximately 11 air miles south of Portsmouth, New Hampshire and 2 miles west of the Atlantic Ocean. The site coordinates are 70 degrees, 51 minutes, 05 seconds west longitude, and 42 degrees, 53 minutes, 53 seconds north latitude. The Universal Transverse Mercator Coordinates of the site are 348,970 meters east and 4,751,090 meters north. Figure 2.1-4 shows the plant arrangement and its surroundings.

1.2.1.2 Size and Ownership

Seabrook Station is owned by a group of utilities that are signatories to the Joint Ownership Agreement and that are hereafter referred to collectively as the Joint Owners. Public Service Company of New Hampshire (PSNH) was formerly the principal owner of Seabrook Station and, through its New Hampshire Yankee Division, was responsible for the managing agent functions in accordance with the Operating License. However, pursuant to a plan of reorganization for PSNH approved by the United States Bankruptcy Court, PSNH became a wholly-owned subsidiary of Northeast Utilities (NU) on June 5, 1992. On that same date, PSNH's ownership share of Seabrook Station was transferred to another subsidiary of NU, the North Atlantic Energy Corporation (NAEC). As part of that plan of reorganization, and in accordance with the approval granted by the NRC in Amendment 10 to the Operating License, PSNH's managing agent responsibilities were transferred to the North Atlantic Energy Service Corporation (North Atlantic), another wholly-owned subsidiary of NU, on June 29, 1992.

In 1996, the New Hampshire Legislature adopted the Electric Utility Restructuring Act ("EURA"), RSA 374-F with the overall public policy goal of developing a more efficient industry structure and regulatory framework. In accordance with EURA, the New Hampshire Public Utilities Commission ("NHPUC") required NAEC to sell its ownership shares in Seabrook Station through a public auction. Seven other Joint Owners joined NAEC in the auction process. Through the auction process, the Selling Owners transferred their respective operating and ownership shares to FPL Energy Seabrook, LLC ("FPLE Seabrook"). As part of the transfer of ownership, and in accordance with the approval granted by the NRC in Amendment 86 to the Operating License, North Atlantic's managing agent responsibilities were transferred to FPLE Seabrook on November 1, 2002.

The Seabrook Station site includes as a minimum the land within a 3000-foot radius of the two reactor building centerlines. The site, for purposes of ownership, is described as two lots. Lot 1 includes the land for the station buildings of Units 1 and 2 and the North Access Road. It corresponds closely with the controlled area boundary except for the access road. Lot 1 is owned by the Joint Owners in proportion to their ownership shares in the project as a whole.

The remainder of the site, Lot 2, is owned by FPLE Seabrook. Certain station structures and facilities are located on Lot 2. Easements for access, construction, operation and maintenance of the station facilities on Lot 2 are granted to the Joint Owners by FPLE Seabrook. Covenants and easements, including all rights and authority to determine activities as necessary to qualify the site as an "exclusion area" as defined in 10 CFR 100, have been assigned by NAEC and North Atlantic to FPLE Seabrook. Figure 1.2-1, Sheet 2 shows the ownership boundaries for lots 1 and 2.

The dry fuel storage site is located to the west of Unit 2 and consists of a large concrete pad containing horizontal storage modules which house spent fuel, a security system, and an electrical enclosure supporting the dry fuel storage site. The "exclusion area" as defined by 10 CFR 100 includes the dry fuel storage site.

1.2.1.3 Access

The site is bounded on the north, east and south by marshland. The only access to the site is from the west via two roads, both entering from U.S. Route 1. A railroad spur enters the site from the Boston and Maine Railroad track, located west of the station (see Figure 1.2-1, Sheet 1). All access to the site is under the control of FPLE Seabrook.

1.2.1.4 Geology

The site area is characterized by broad open areas of level tidal marsh, dissected by numerous tidal creeks and man-made linear drainage ditches, interrupted locally by wooded "islands" or peninsulas which rise to elevations of 20 to 30 feet above sea level.

The station buildings are placed on or in a gneissoid phase of the Newburyport quartz diorite intrusive. Newburyport is a hard, strong crystalline igneous rock consisting of a medium-to-course-grained quartz diorite matrix intimately enclosing inclusions of dark gray, fine-grained diorite.

A detailed discussion is presented in Section 2.5.

1.2.1.5 Seismology

The most severe earthquakes effects experienced by the site were Intensity VI (MM), as estimated by isoseismal lines from two offshore earthquakes in 1727 and 1755. The ground acceleration associated with the Safe Shutdown Earthquake was selected as 0.25 g.

A detailed discussion is presented in Section 2.5.

1.2.1.6 Meteorology

The site is located about two miles from the open Atlantic Ocean resulting in a definite maritime influence on the general climate. Winter temperature extremes are tempered by the relatively warmer water, and summer temperatures are moderated by a sea breeze. Precipitation amounts are uniform throughout the year, with an occasional heavy rainfall during a northeast storm. The site is not usually subjected to the full strength of east coast hurricanes. Such storms usually move either offshore or inland before they reach the Seabrook latitude.

A detailed discussion is presented in Section 2.3.

1.2.1.7 Hydrology

The site is located on the western side of the Hampton Harbor estuary on a peninsula of land which is bordered on the north by the Browns River and on the south by Hunts Island Creek. Surface drainage of natural precipitation from the peninsula is into these two tidal streams. The mean tidal range of Hampton Harbor is about 8.6 feet, varying from 4 feet below to 4.6 feet above mean sea level. The critical flood elevations at the site result from the probable maximum hurricane occurring simultaneously with the standard project storm. All safety-related systems and components are protected by structures which surround them, or by being located above the maximum stillwater level on the plant grade. Structures and components subject to wave runup are adequately protected to maintain the integrity of their functions.

A detailed discussion is presented in Section 2.4.

1.2.2 Facility Arrangement

1.2.2.1 General Arrangement

The arrangement of the major structures on the site is shown on Figure 1.2-1. The general arrangements of the individual structures shown in Figures 1.2-2 through 1.2-59 are provided for historical purposes only.

The major structures associated with Seabrook Station are the containment structure, containment enclosure, Primary Auxiliary Building, Fuel Storage Building, Waste Processing Building, Control Building, Diesel Generator Building, Turbine Building, Circulating Water Pumphouse, Service Water Pumphouse, Administration and Service Building, Emergency Feedwater Pump Building, cooling water tunnels, ocean intake structures, ocean discharge nozzles, Ultimate Heat Sink Cooling Tower, Chlorination Building, Fire Pumphouse, Steam Generator Blowdown Recovery Building, and a Dry Fuel Storage Facility.

1.2.2.2 Containment Structure

The containment structure, Figure 1.2-2, Figure 1.2-3, Figure 1.2-4, Figure 1.2-5, Figure 1.2-6, completely encloses a Reactor Coolant System, and is a seismic Category I reinforced concrete structure in the form of a right vertical cylinder with a hemispherical dome and flat foundation mat founded on bedrock. The inside face is lined with a welded carbon steel plate, providing a high degree of leak tightness. A protective 4-ft thick concrete mat that forms the floor of the Containment protects the liner over the foundation mat. The containment structure provides biological shielding for normal and accident conditions. The approximate dimensions of the Containment are:

Inside diameter	140 ft
Inside height	219 ft
Vertical wall thickness	4 ft 6 in. and 4 ft 7 ½ in.
Dome thickness	3 ft 6 1/8 in.
Foundation mat thickness	10 ft

Containment penetrations are provided in the lower portion of the structure, and consist of a personnel lock and an equipment hatch/personnel lock, a fuel transfer tube and piping, electrical, instrumentation, and ventilation penetrations.

The Containment is designed to withstand all credible conditions of loading, including normal loads, construction loads, test loads, severe environmental loads and extreme environmental and abnormal loads. The maximum design pressure is 52 psig. The maximum liner temperature associated with the design pressure response is 271°F.

Detailed discussions are presented in Subsections 3.8.1, 3.8.2 and 6.2.1.

1.2.2.3 Containment Enclosure

The containment enclosure, Figure 1.2-2 Figure 1.2-3, Figure 1.2-4, Figure 1.2-5, Figure 1.2-6, surrounds the containment structure and is designed in a similar configuration as a vertical right cylindrical seismic Category I, reinforced concrete structure with dome and ring base. The approximate dimensions of the structure are: inside diameter, 158 ft; vertical wall thickness, varies from 1 ft, 3 in. to 3 ft; and dome thickness, 1 ft, 3 in.

The containment enclosure is designed to entrap, filter and then discharge any leakage from the containment structure. To accomplish this, the space between the containment enclosure and the containment structure, as well as the penetration and safety-related pump areas, are maintained at a negative pressure following a loss-of-coolant accident by fans which take suction from the containment enclosure and exhaust to atmosphere through charcoal filters. To ensure air tightness for the negative pressure, leakage through all joints and penetrations has been minimized.

Additional information is presented in Subsections 3.8.4 and 6.2.3.

1.2.2.4 Primary Auxiliary Building

The Primary Auxiliary Building, Figure 1.2-7, Figure 1.2-8, Figure 1.2-9, Figure 1.2-10, Figure 1.2-11, Figure 1.2-12, Figure 1.2-13, Figure 1.2-14, is a seismic Category I, reinforced concrete structure which is located adjacent to the containment structure, and contains most of the auxiliary systems for the Reactor Coolant System. Those systems whose major components are in the Primary Auxiliary Building include the Chemical and Volume Control, Primary Component Cooling, Sample, Low Pressure Safety Injection, Residual Heat Removal and Containment Spray Systems.

The residual heat removal and containment spray pumps and their associated heat exchangers are located in water tight compartments in the northern part of the Primary Auxiliary Building. The compartments are isolated from the rest of the Primary Auxiliary Building by concrete walls to preclude flooding the pumps due to a rupture anywhere else in the building. The containment spray pumps are located below grade to satisfy net positive suction head requirements.

Additional information is presented in Subsection 3.8.4.

1.2.2.5 Fuel Storage Building

The Fuel Storage Building, Figure 1.2-15 and Figure 1.2-21, is a seismic Category I reinforced concrete structure which houses a new fuel vault and a spent fuel pool. The new or unused fuel is stored in the new fuel vault prior to its use in the core. It is transported into the Containment by an underwater conveyor system. The spent fuel is transferred back from the Containment in the same manner, and is stored in the spent fuel pool where the pool water provides cooling and shielding.

Additional information is presented in Subsection 3.8.4.

1.2.2.6 Waste Processing Building

The Waste Processing Building, Figure 1.2-22, Figure 1.2-23, Figure 1.2-24, Figure 1.2-25, Figure 1.2-26, Figure 1.2-27, Figure 1.2-28, Figure 1.2-29 and Figure 1.2-30, is seismic Category I, reinforced concrete and structural steel. It houses the Liquid and Gas Waste Processing, Boron Recovery and Solid Waste Systems.

The building contains systems to process radioactive gases, liquids and solids. The gases are processed through charcoal delay beds to provide for iodine removal and radioactive decay of the noble gases. Liquids are processed in demineralizer skids, and can be recycled back into the plant or released if low enough in activity. Evaporators, installed as plant design, are available as an alternate method of processing liquids. Solids are normally stored in various containers and stored on site prior to shipment offsite for burial. The plant contains equipment designed to solidify waste which may be used to process solid waste prior to shipment off site.

Additional information is presented is Subsection 3.8.4.

1.2.2.7 Control Building

The Control Building, Figure 1.2-31, Figure 1.2-32 and Figure 1.2-33, is a seismic Category I, reinforced concrete structure which includes an electrical equipment room which houses the switchgear, batteries, rod drive controls, and rod drive M-G sets, a cable spreading room and a control room.

Additional information is presented in Subsection 3.8.4.

1.2.2.8 Diesel Generator Building

The Diesel Generator Building, Figure 1.2-34, Figure 1.2-35 and Figure 1.2-36, is a seismic Category I, reinforced concrete structure which houses two diesel generators together with their auxiliary equipment and two diesel generator fuel oil storage tanks.

Additional information is presented in Subsection 3.8.4.

1.2.2.9 Turbine Building

The Turbine Building, Figure 1.2-37, Figure 1.2-38, Figure 1.2-39, Figure 1.2-40, Figure 1.2-41, Figure 1.2-42, Figure 1.2-43, Figure 1.2-44, and Figure 1.2-45, is a nonseismic Category I structure which houses a turbine generator and associated condensers, pumps and feedwater heaters. The lube oil, secondary component cooling and service and instrument air systems are also located in the Turbine Building.

1.2.2.10 Circulating Water Pumphouse

The Circulating Water Pumphouse, Figure 1.2-46, Figure 1.2-47 and Figure 1.2-48, is a non-seismic Category I structure located approximately 160 feet east of the containment structure. It is composed of a forebay and three bays with a circulating water pump in each. Each pump bay also has one traveling screen. The three pumps supply cooling water to the condensers.

Additional information is presented in Subsection 10.4.5.

1.2.2.11 Service Water Pumphouse

The Service Water Pumphouse, Figure 1.2-46, Figure 1.2-47, and Figure 1.2-48, is a seismic Category I structure which is adjacent to the Circulating Water Pumphouse. It contains the four service water pumps which are available for normal operation and for post-accident cooldown.

Additional information is presented in Subsection 3.8.4.

1.2.2.12 Administration and Service Building

The Administration and Service Building, Figure 1.2-49 and Figure 1.2-50, is a non-seismic Category I structure which is located adjacent to the Turbine Building. It houses the administrative offices, store room, water treatment plant, auxiliary boilers, health physics checkpoint, chemistry laboratories, locker rooms, machine shops and other service areas. The access to the radiologically controlled area (RCA) is made through the health physics checkpoint.

1.2.2.13 Emergency Feedwater Pump Building

The Emergency Feedwater Pump Building, Figure 1.2-51, is a seismic Category I structure which is located adjacent to the containment structure, and contains the emergency feedwater pumps and emergency feedwater control valves.

Additional information is presented in Subsection 3.8.4.

1.2.2.14 Cooling Water Tunnels

The Heat Dissipation System uses once-through ocean water cooling, and is designed to provide all heat removal requirements. The cooling water is obtained from the Atlantic Ocean and is carried to the power plant through a 17,000 - foot long intake tunnel in the underlying bedrock, and is returned to the ocean through a similar discharge tunnel, approximately 16,500 feet long. The tunnels, which are nonseismic Category I, are lined with a permanent lining of cast-in-place concrete to a 19'-0" finished inside diameter. Figure 1.2-52 and Figure 1.2-53 show the plan and profile of the circulating water tunnels.

Additional information is presented in Subsections 9.2.5 and 10.4.5.

1.2.2.15 Ocean Intake Structures

The intake tunnel is connected to the ocean by means of three, nonseismic Category I, 9'-10½" finished inside diameter shafts, spaced between 103 and 110 feet apart. These shafts are located approximately 7000 feet off the Hampton Beach shoreline in 60 feet of water. A submerged 30'-6" diameter 19' high reinforced concrete structure ("velocity cap"), Figure 1.2-54, is mounted on top of each structure.

Additional information is presented in Subsection 10.4.5.

1.2.2.16 Ocean Discharge Nozzles

The discharge tunnel is connected to the ocean by means of eleven, non-seismic Category I, 5'-1" finished inside diameter shafts, spaced approximately 100 feet apart, located approximately 5000 feet off the Seabrook Beach shoreline in water up to 70 feet deep. A double discharge nozzle, Figure 1.2-55, is attached to the top of each shaft to increase the discharge velocity and diffuse the heated water.

Additional information is presented in Subsection 10.4.5.

1.2.2.17 Ultimate Heat Sink Cooling Tower

The cooling tower, Figure 1.2-56, is a seismic Category I structure that is composed of a concrete basin, pump rooms, electrical switchgear rooms and mechanical equipment rooms. The pump rooms house vertical centrifugal pumps.

Additional information is presented in Subsection 9.2-5.

1.2.2.18 Chlorination Building

The Chlorination Building, Figure 1.2-57 and Figure 1.2-58, is a nonseismic Category I structure which houses sodium hypochlorite storage tanks, storage tanks and related equipment for chlorination of circulating water piping, cooling tower and condensers. It is located south of the discharge transition structure. Part of the building on the west end houses electrical substations, and the east side of the building also houses a maintenance machine shop.

1.2.2.19 Fire Pumphouse

The Fire Pumphouse is a nonseismic Category I structure which houses electric and diesel-driven fire pumps and associated controls for use in extinguishing any fire that may occur on the site.

1.2.2.20 Steam Generator Blowdown Recovery Building

The Steam Generator Blowdown Recovery Building, Figure 1.2-59, is located on the south side of the Waste Processing Building and tank farm area, and houses the Steam Generator Blowdown Recovery System.

1.2.2.21 SEPS Equipment Enclosures

The Supplemental Emergency Power System (SEPS) equipment enclosures, Figure 1.2-1, are located on the south side of the Cooling Tower. These enclosures house the SEPS diesel generators and paralleling switchgear.

1.2.2.22 Dry Fuel Storage Facility

The Dry Fuel Storage Facility is located to the west of Unit 2 and consists of a large concrete pad containing horizontal storage modules which house spent fuel, a security system, and an electrical enclosure supporting the Dry Fuel Storage Facility. The site is surrounded by a vehicle barrier system. The site is a radiological restricted area (RA).

1.2.3 Reactor Systems

A detailed discussion of the various reactor systems is presented in Chapter 4.

1.2.3.1 Reactor Core

The reactor core is a multi-region cycled core. The fuel rods are slightly cold worked Zircaloy-4, ZIRLO® or Optimized ZIRLO™[1] tubes containing slightly enriched uranium dioxide fuel. The fuel rods are supported by spring clip grids in a 17x17 array to form fuel assemblies. There are 193 fuel assemblies in the core.

1.2.3.2 Reactor Vessel Internals

The reactor internals are comprised of a lower core support structure (including the entire core barrel and neutron shield pad assembly), the upper core support structure, and the core instrumentation support structure. The reactor internals support the core, maintain fuel alignment, limit fuel assembly movement, maintain alignment between fuel assemblies and control rods, direct coolant flow to the pressure vessel head, provide gamma and neutron shielding and guide the incore instrumentation.

A detailed discussion is presented in Subsection 3.9.5.

1.2.3.3 Reactivity Control Systems

Full-length control rod assemblies and burnable neutron absorber rods are inserted into guide thimbles of fuel assemblies for neutron control. The absorber sections of the control rods are composed of silver-indium-cadmium cylinders encapsulated in 304 stainless steel cladding. Within the cladding, the silver alloy rods are stacked to provide an absorber column of 142 inches. The absorber material in the fixed burnable neutron absorber rods is in the form of borosilicate glass sealed in stainless steel tubes. Boric acid in solution in the coolant is also used for neutron control during slow transients.

The control rod drive mechanisms are equipped with magnetic latches, which are controlled by three magnetic coils. The latches are designed so that upon a loss of power to the coils, the Rod Cluster Control Assembly is released and falls by gravity into the core to shut down the reactor.

Additional information is presented in Chapter 4.

---

[1] ZIRLO® and Optimized ZIRLO™ fuel rod cladding are trademarks or registered trademarks of Westinghouse Electric Company LLC, its affiliates and/or its subsidiaries in the United States of America and may be registered in other countries throughout the world. All rights reserved. Unauthorized use is strictly prohibited. Other names may be trademarks of their respective owners.

1.2.3.4 Nuclear Instrumentation

The reactor is provided with two types of monitoring systems: a system of fixed ion chambers located symmetrically around the core outside of the reactor pressure vessel, a system of fixed incore instrumentation and a system of safety grade excore fixed fission chambers located symmetrically around the reactor vessel. The incore detection devices consist of fixed self-powered platinum detectors. The fixed self-powered detectors are distributed along the part of each detector assembly in the active length of the fuel assembly. Their continuous signals, when processed, provide an ongoing flux map.

The Safety Grade Excore Neutron Flux Monitoring System measures thermal neutron flux and boron dilution of the reactor vessel during operation and during and after remote safe shutdown. This meets requirements of RG 1.97 and NUREG-0737.

Additional information is presented in Section 7.7 and Subsection 4.4.6.

1.2.4 Reactor Coolant System and Connected Systems

1.2.4.1 Reactor Coolant System

The Reactor Coolant System is composed of four steam generators, four reactor coolant pumps, a pressurizer, reactor vessel, and pressurizer relief tank. The system is designed to transfer a maximum thermal output of 3678 MWt (including pump heat) from the core to the steam generators where the heat is transferred to the Secondary Steam System that drives the turbine generator.

The Reactor Coolant System is arranged in four parallel loops, each consisting of a single steam generator and reactor coolant pump. Water is pumped under pressure through the reactor vessel where it picks up the thermal output of the core and to the steam generator where it gives up the core heat. It is then recirculated by the pumps back into the reactor vessel. The pressurizer is used to pressurize the water to 2250 psia to inhibit any boiling in the core. The core cooling water also acts as a neutron moderator, a reflector and a solvent for a chemical neutron absorber.

A detailed discussion on this system is presented in Chapter 5.

1.2.4.2 Reactor Vessel

The reactor vessel is a cylindrical structure with a hemispherical bottom head and a flanged and gasketed removable upper head, which houses the core, core support structures, control rod clusters, thermal shield and other parts associated with the core. The outlet and inlet nozzles which provide the exit of the heated coolant and its return to the vessel interior for recirculation through the core, are located at an elevation between the head flange and the core.

A detailed discussion is presented in Section 5.3.

1.2.4.3 Residual Heat Removal System

The Residual Heat Removal System is used to reduce the temperature of the reactor coolant at a controlled rate from 350°F to 125°F, within 20 hours after shutdown (with all equipment operating), and to maintain the proper reactor coolant temperature during refueling. The residual heat removal pumps circulate reactor coolant through two residual heat removal heat exchangers, and return it to the Reactor Coolant System through the low-pressure safety injection header.

A detailed discussion on this system is presented in Subsection 5.4.7.

1.2.5 Engineered Safety Features

The Engineered Safety Features serve to limit the potential radiation exposure to the public and to plant personnel following an accidental release of radioactive fission products from the Reactor Coolant System, particularly as the result of a loss-of-coolant accident (LOCA). These safety features function to localize, control, mitigate and terminate such accidents, ensuring that 10 CFR 100 limits are not exceeded. The safety features consist of the following:

a. Containment Systems

   1. Containment structure (including compartments)

   2. Containment enclosure

   3. Containment Heat Removal System (Containment Spray System)

   4. Containment Isolation System

   5. Combustible Gas Control System

b. Emergency Core Cooling System

c. Control room habitability systems

d. Fission Product Removal and Control Systems (Containment Enclosure and Fuel Storage Building ESF filter systems)

e. Emergency Feedwater System.

The above systems include those portions of the Instrumentation and Protection System and electrical power distribution system necessary for operation.

1.2.5.1 Containment Structure

The containment structure is described in Subsection 1.2.2.2.

1.2.5.2 Containment Enclosure

The containment enclosure is described in Subsection 1.2.2.3.

1.2.5.3 Containment Heat Removal System

A Containment Spray System is utilized for post-accident containment heat removal. The Containment Spray System is designed to spray water containing boron and sodium hydroxide into the Containment atmosphere after a LOCA to cool it and remove iodine. The pumps initially take suction from the refueling water storage tank and pump its contents into the Containment atmosphere through the spray headers located in the Containment dome. After a prescribed amount of water is removed from the tank, the pump suction is transferred to the Containment sump, and cooling is continued by recirculating sump water through the spray heat exchangers and back through the spray headers.

The spray is actuated by a Containment spray actuation signal that is generated at a designated containment pressure. The system is completely redundant and can withstand any single failure.

A detailed discussion on this system is presented in Subsection 6.2.2.

1.2.5.4 Containment Isolation System

The Containment Isolation System establishes and/or maintains isolation of the containment from the outside environment in order to prevent the release of fission products. Containment isolation signals actuate the appropriate valves to a closed position whenever automatic safety injection occurs or high containment pressure is experienced. Double barrier protection is provided for all lines that penetrate the Containment boundary.

A detailed discussion on this system is presented in Subsection 6.2.4.

1.2.5.5 Combustible Gas Control System

Thermal electric hydrogen recombiners reduce the concentration of hydrogen in the post-LOCA Containment atmosphere. A purge feature is also provided for backup control of hydrogen.

A detailed discussion of this system is presented in Subsection 6.2.5.

1.2.5.6 Emergency Core Cooling System

The Emergency Core Cooling System (ECCS) injects borated water into the Reactor Coolant System following a LOCA to limit core damage, metal-water reactions and fission product release, and to assure adequate shutdown margin. The ECCS also provides continuous long-term post-accident cooling of the core, by recirculating borated water between the containment sump and the reactor core.

The system consists of two centrifugal charging pumps, two low pressure safety injection pumps, two residual heat removal pumps and heat exchangers, and four safety injection accumulators. The system is completely redundant, and will assure flow to the core in the event of any single failure.

A detailed discussion on this system is presented in Section 6.3.

1.2.5.7 Control Room Habitability Systems

The Control Building contains the building services necessary for continuous occupancy of the control room complex by operating personnel during all operating conditions. These building services include: HVAC services, air purification and iodine removal, fresh air intakes, fire protection, emergency breathing apparatus, communications and meteorological equipment, lighting, and housekeeping facilities.

A detailed discussion on this system is presented in Section 6.4.

1.2.5.8 Engineered Safety Features (ESF) Filter Systems

ESF filter systems required to perform a safety-related function following a design basis accident are discussed below:

a. The Containment Enclosure Exhaust Filter System collects, filters and discharges most airborne containment leakage (excluding noble gases). The system is not normally in operation, but in the event of a LOCA, it is placed in operation and keeps the containment enclosure (as defined in Subsection 6.2.3.2a) at negative pressure to ensure most airborne leakage (excluding noble gases) from the containment structure is collected and filtered before discharge to the plant vent.

b. One of two redundant charcoal filter exhaust trains is placed in operation in the Fuel Storage Building whenever irradiation fuel not in a cask is being handled. These filter units together with dampers and controls will maintain the building at a negative pressure.

Detailed discussions on these systems are presented in Subsection 6.5.1.

1.2.5.9 Emergency Feedwater System

The Emergency Feedwater System supplies demineralized water from the condensate water storage tank to the four steam generators upon loss of normal feedwater flow to remove heat from the Reactor Coolant System. Operation of the system will continue until the reactor coolant system pressure is reduced to a value below which the Residual Heat Removal System can be operated. The combination of one turbine-driven and one motor-driven emergency feedwater pump provides a diversity of power sources to assure delivery of condensate under emergency conditions.

A detailed discussion of the system is presented in Section 6.8.

1.2.6 Instrumentation and Controls

1.2.6.1 Reactor Trip System

The Reactor Trip System automatically initiates a reactor trip when any monitored variable or combination of variables approaches pre-established limits. Sufficient redundancy is provided to permit periodic testing while maintaining capability to meet single failure criteria. The Reactor Protection System acts to shut down the reactor, close isolation valves, and initiate operation of the Engineered Safety Features should any or all of these actions be required.

A detailed discussion on this system is presented in Section 7.2.

1.2.6.2 Engineered Safety Features Systems

This system provides the instrumentation and controls required to sense accident situations and initiate the operation of necessary Engineered Safety Features. The system is designed to ensure adequate redundancy and separation to provide reliable system initiation and meets single failure criteria.

A detailed discussion on this system is presented in Section 7.3.

1.2.6.3 Other Safety Significant Systems

Instrumentation and controls are provided to actuate, control and monitor systems required for safe shutdown. The instrumentation and controls are designed to ensure reliable operation and meet single failure criteria.

The accident monitoring instrumentation (AMI) displays provide the information necessary for the operators to monitor plant variables and systems during and following postulated accidents. The AMI provides the operators the information necessary to assist in evaluating the nature of the accident, the functioning of engineered safety features actuation systems, the plant response to safety measures in operation and the need for additional manual action.

Detailed discussions on these systems are presented in Sections 7.4 and 7.5.

1.2.7 Electric Power

The facility is interconnected to offsite power via three 345 kilovolt lines of the transmission system for the New England states. The normal preferred source of power for the unit is its own main turbine generator. The redundant safety feature buses of the unit are powered by two unit auxiliary transformers. A highly reliable generator breaker is provided to isolate the generator from the unit auxiliary transformers in the event of a generator trip, thereby obviating the need for a bus transfer upon loss of turbine generator power. In the event that the unit auxiliary transformers are not available, the redundant safety feature buses of the unit are powered by two reserve auxiliary transformers. Upon loss of offsite power, the unit is supplied with adequate power by either of two fast-starting, diesel-engine generators. Either diesel-engine generator and its associated safety feature bus is capable of providing adequate power for a safe shutdown under accident conditions with a concurrent loss of offsite power. A non-safety related supplemental emergency power system (SEPS) is available as a backup power source to either safety feature bus when one or both emergency diesel generators fail to start and load. SEPS is capable of providing adequate power for a safe shutdown under loss of offsite power condition. A constant supply of power to vital instruments and controls of each unit is assured through the redundant 125 volt direct current buses and their associated battery banks, battery chargers and inverters.

A detailed discussion on this system is presented in Chapter 8.

1.2.8 Auxiliary Systems

1.2.8.1 Fuel Storage and Handling

The reactor is refueled with equipment designed to handle spent fuel under water from the time it leaves the reactor vessel until it is transferred into the spent fuel pool for storage. Transfer of spent fuel under water enables the use of an optically transparent radiation shield, and provides a reliable source of coolant for removal of residual heat. The system includes a manipulator crane located inside the Containment above the refueling cavity, fuel transfer carriage, upending devices, fuel transfer tube, spent fuel pool crane in the spent fuel pool area, and various devices used for handling new fuel assemblies.

New fuel is taken from the new fuel storage vault and transferred to the Containment using the upending devices and transfer carriage. It is then put into the core using the manipulator crane. Spent fuel is taken out in the same manner and transferred back into the spent fuel pool for storage.

The new fuel is stored dry on 21-inch centers in the new fuel vault. The new fuel vault is designed to assure a $k_{eff} \leq 0.98$ even if optimum neutron moderation is assumed. The spent fuel racks are designed for high density fuel storage and contain neutron absorbing material to assure a $k_{eff} \leq 0.95$, even if no credit is taken for the soluble boron present in the water where the spent fuel is immersed.

Detailed discussion on these systems are presented in Subsections 9.1.1, 9.1.2 and 9.1.4.

1.2.8.2 Station Service Water System

The Service Water System consists of two completely independent and redundant parallel flow trains, each supplying cooling water to a primary component cooling water heat exchanger, a diesel generator water jacket water cooler, the secondary component cooling water heat exchangers and the condenser water box priming pump seal water heat exchangers. Under normal conditions, flow is supplied by pumps taking suction from a common bay of the Service Water Pumphouse; when transfer to the Ultimate Heat Sink Cooling Tower occurs, service water is obtained from the cooling tower basin using the cooling tower pumps.

A detailed discussion of this system is presented in Subsection 9.2.1.

1.2.8.3 Cooling System for Reactor Auxiliaries

The Primary Component Cooling Water System consists of two independent trains of pumps and heat exchangers to remove heat from the various auxiliary systems. During normal operation, the system circulates corrosion-inhibited demineralized water through all the heat loads associated with primary systems. Some of these loads are the letdown heat exchanger, sample heat exchangers, spent fuel pool heat exchanger, boric acid and waste evaporators. For a LOCA, the system automatically isolates nonsafety-related loads and provides cooling for the residual heat exchangers, the containment spray heat exchangers, and other safety-related loads.

A detailed discussion of this system is presented in Subsection 9.2.2.

1.2.8.4 Makeup Water System

Makeup water is processed in the water treatment plant located in the Administration and Service Building. The water treatment plant can process water at a design flow of 150 gpm for use in both the primary and secondary systems.

A detailed discussion of this system is presented in Subsection 9.2.3.

1.2.8.5 Compressed Air System

The Compressed Air System consists of two separate subsystems: plant compressed air system and containment compressed air system.

The Plant Compressed Air System consists of three compressors, intake filters, aftercooler/moisture separators, four air receivers, two instrument air dryers, associated instruments/controls, piping and valves. The above equipment is located in the south end of the Turbine Building.

The Containment Compressed Air System consists of two package compressor units (including intake filter, after cooler/moisture-separator and receiver) that discharge compressed air either to a service air header or to an independent air dryer.

A detailed discussion on this system is presented in Subsection 9.3.1.

1.2.8.6 Ultimate Heat Sink

The ultimate heat sink is normally the Atlantic Ocean. Ocean water is supplied to the Service Water System during normal operating and accident conditions through one of two tunnels. The heated water is then returned to the ocean through the other tunnel.

In the unlikely event that the tunnels are unavailable, the ultimate heat sink is transferred to a mechanical draft cooling tower. The cooling water is supplied by cooling tower pumps to the primary component cooling water and diesel generator heat exchangers.

A detailed discussion of this system is presented of Subsection 9.2.5.

1.2.8.7 Chemical and Volume Control System

The Chemical and Volume Control System functions to control reactivity in the core by boron addition or dilution; purify the reactor coolant by filtering, demineralizing and injecting clean water; add chemicals for corrosion control of the reactor coolant, and supply purified water to the reactor coolant pump seals.

The purity level in the Reactor Coolant System is controlled by continuous purification of a letdown stream of reactor coolant. Water letdown from the Reactor Coolant System is first cooled in two heat exchangers. It is then filtered, demineralized and degassed to remove corrosion and fission products and is sprayed into the volume control tank.

The Chemical and Volume Control System automatically adjusts the amount of reactor coolant to compensate for changes in specific volume due to coolant temperature changes and reactor coolant pump shaft seal leakage in order to maintain a constant level in the pressurizer.

A detailed discussion on this system is presented in Subsection 9.3.4.

1.2.8.8 Boron Recovery System

The Boron Recovery System stores and processes reactor coolant effluent and reactor coolant grade drainage for reuse in the reactor plant or for disposal offsite. The system maximizes recycling of effluent back to the reactor plant and minimizes the release of radioactive material to the environment by proper cleanup and volume reduction methods. The system process is a combination of degassification, demineralization, filtration and evaporation.

A detailed discussion on this system is presented in Subsection 9.3.5.

1.2.8.9 Air Conditioning, Heating, Cooling and Ventilating Systems

The Ventilation and Air Conditioning Systems for Engineered Safety Features and other essential equipment rooms provide an adequate supply of tempered air to safety-related and emergency equipment areas during accident and post-accident conditions. These Ventilation and Air Conditioning Systems are redundant and seismically designed. The Ventilation and Air Conditioning

Systems also provide clean ventilating air, heated or cooled when required, to all plant areas during normal operating conditions.

Flow patterns have been established so that air in areas of low potential radioactive contamination progress toward areas of higher potential radioactive contamination.

A Containment Recirculating Filter System provides atmospheric mixing following a LOCA, to prevent excessive hydrogen concentrations in the dome portion of the Containment which also provides for containment cleanup during normal plant operation. A Containment Purge System permits purging of the Containment prior to personnel entry, after reactor shutdown, and during refueling. An Online Purge System permits purging of the Containment periodically during normal plant operation.

Detailed discussions on these systems are presented in Section 9.4.

1.2.8.10 Plant Fire Protection System

The Fire Protection System contains two diesel-driven and one electric motor-driven fire pumps which supply the various hydrants, hose stations and sprinkler and spray systems. The pumps take suction from two 500,000-gallon storage tanks. Three hundred thousand gallons of water from each tank is dedicated for fire protection; the remainder is available for other plant use. Standpipes and hose stations in areas containing safe shutdown equipment are also capable of being fed from the Service Water System.

Fire detection is provided at locations determined by the fire hazard analysis as having significant fire hazards resulting from the presence of combustible liquids, solids or other flammable materials. Detection is also provided in other areas on a case basis.

Portable hand-held extinguishers, primarily dry chemical, CO_2, Halon 1211 and water, are provided at strategic locations throughout the various plant buildings.

A detailed discussion on this system is presented in Subsection 9.5.1.

1.2.8.11 Lighting Systems

The lighting systems provide the illumination required for plant operation and maintenance, and for personnel safety and convenience. Upon loss of offsite power, AC emergency lighting is powered by the diesel generators to provide continued onsite lighting. Upon loss of all AC power, DC lighting is provided for immediate short-term illumination.

A detailed discussion on these systems is presented in Subsection 9.5.3.

1.2.8.12 Communication System

The communications system provides for intraplant and offsite communications. The system consists of telephone, public address, sound-powered telephone, plant radio system and fiber-optic link. The five subsystems are totally independent of each other so that a failure in one does not affect the others.

A detailed discussion on this system in Subsection 9.5.2.

1.2.8.13 Radiation Data Management System

The Radiation Data Management System consists of three subsystems: process and effluent radiation monitoring system, area radiation monitoring system, airborne and particulate radioactivity monitoring system.

A detailed discussion on this system is presented in Sections 11.5 and 12.3.

1.2.9 Steam and Power Conversion System

1.2.9.1 Main Steam Supply System

Steam is supplied from the outlet of four steam generators, taking heat from the Pressurized Water Reactor Coolant System to drive the turbine. Each steam line includes a flow restrictor, power-operated atmospheric relief valve, safety valves and isolation valve. The Main Steam System also provides primary steam to the reheaters, steam generator feed pumps and the seal system.

A detailed discussion on this system is presented in Section 10.3.

1.2.9.2 Turbine Generator

The turbine generator nameplate output is 1,304,003 kW at rated conditions. The turbines are six flow tandem compound 1800 rpm machines with 43-inch last stage buckets. The throttle steam conditions are 960 psig, 1192H with one stage of reheat. The unit has six stages of feedwater heating fed by extraction steam from the turbines. Steam from the moisture separator/reheaters is used to supply two turbine-driven steam generator feed pumps during normal operation. The rating of the generator output is 1,373,100 kVA at 1800 rpm, 3-phase 60 Hz, 0.94 power factor, 0.52 short circuit ratio and a rated hydrogen pressure of 75 psig.

A detailed discussion is presented in Section 10.2.

1.2.9.3 Main Condensers/Condenser Evacuation System

The condenser system consists of three deaerating, double-pass, single pressure, radial flow-type surface condensers, having titanium tubes. A condenser air evacuation system removes noncondensible gases from the main condensers of the unit and delivers these gases to the atmosphere after monitoring for radioactivity.

A detailed discussion on this system is presented in Subsections 10.4.1 and 10.4.2.

1.2.9.4 Condensate and Feedwater System

The Condensate and Feedwater System takes suction from the main condenser hotwell and heater drain tank and delivers feedwater to the steam generators at increased temperature and pressure. A startup feedwater pump is provided to deliver the required flow of water to the steam generators during startup, hot standby and shutdown.

A detailed discussion on this system is presented in Section 10.4.

1.2.9.5 Secondary Component Cooling Water System

The Secondary Component Cooling Water System removes heat from the turbine accessories and auxiliary equipment and transfers the heat to the Service Water System.

A detailed discussion on this system is presented in Subsection 10.4.10.

1.2.9.6 Steam Generator Blowdown System

The Steam Generator Blowdown System receives, processes and recycles water from the secondary side of the steam generators. The blowdown from each of the four steam generators is routed to a flash tank where the flashed steam is removed and routed to the main condenser. Residual liquid from the flash tank may be further processed through the Waste Liquid System if found to be radioactive; otherwise, it is recycled back to the plant for storage and/or use, or discharged to the Circulating Water System.

A detailed discussion on this system is presented in Subsection 10.4.8.

1.2.9.7 Circulating Water System

Cooling of the Main Condenser System is via water taken from the Atlantic Ocean through one 19-foot diameter tunnel which is pumped through the three condenser shells. The heated water is returned to the ocean through one 19-foot diameter tunnel with diffusers.

A detailed discussion is presented in Subsections 9.2.5 and 10.4.5.

1.2.10 Radioactive Waste Management

1.2.10.1 Liquid Waste Management System

The Liquid Waste System stores and processes nonrecoverable radioactive liquid waste from various sources throughout the plant. The system normally uses a combination of filtration and demineralization to convert the waste into a liquid acceptable for discharge to the environment and a concentrate suitable for solidification. Permanently installed evaporators may be used as an alternate method for processing liquids.

A detailed discussion on this system is presented in Section 11.2.

1.2.10.2 Gaseous Waste Management System

The Radioactive Gaseous Waste System is designed to collect and process fission product gases from the reactor coolant letdown stream and from the liquids collected in the reactor coolant drain tank and primary drain tank. This system is also used to recycle hydrogen as well as introduce makeup hydrogen from the storage system.

A detailed discussion on this system is presented in Section 11.3.

1.2.10.3 Solid Waste Management System

The Solid Waste Management System consists of the following subsystems: spent resin sluicing, Dry Active Waste (DAW) volume reduction, alternate solidification, and volume reduction and solidification in asphalt. Volume reduction and solidification is further broken down to waste concentrates handling, spent resin handling, liquid waste volume reduction, and material handling.

A detailed discussion on the Solid Waste Management System is presented in Section 11.4.

1.3 COMPARISON TABLES

Comparison Table 1.3-1 and Table 1.3-2 are provided in the Updated FSAR for continuity with the original FSAR. These tables have not been revised for the Updated FSAR.

1.3.1 Comparisons with Similar Facility Designs

Table 1.3-1 provides a summary of principal design similarities and differences between Seabrook Station and other nuclear power plants using the same NSSS supplier. The comparison covers the reactor design, the engineered safety features, containment concept, the instrumentation and electrical systems, the Radioactive Waste Management System, and other principal systems. The plants selected for the comparison were W. B. McGuire Nuclear Station (Duke Power Company), Comanche Peak Steam Electric Station (Texas Utilities Generating Company), and Byron/Braidwood Station (Commonwealth Edison Company).

A detailed comparison of principal nuclear, thermal-hydraulic, and mechanical design parameters between the Seabrook and W. B. McGuire reactors is presented in Table 4.1-1.

1.3.2 Comparison of Final and Preliminary Information

Table 1.3-2 outlines the significant design changes that have been made since the submittal of the Preliminary Safety Analysis Report (PSAR).

1.4 IDENTIFICATION OF AGENTS AND CONTRACTORS

1.4.1 Applicants

Public Service Company of New Hampshire (PSNH), the former principal owner, was responsible for the design, construction, and startup of Seabrook Station. FPLE Seabrook is currently responsible for the operation of Seabrook Station. The following contractors and service organizations were engaged to perform engineering, design, procurement, construction and technical support services for the construction and operation of Seabrook Station.

1.4.2 Yankee Atomic Electric Company

PSNH contracted with Yankee Atomic Electric Company (YAEC) for the services of certain personnel involved in project engineering, licensing, and fuel supply. In addition, PSNH contracted with YAEC for establishing and implementing the Quality Assurance Program for design and construction.

1.4.3 Westinghouse Electric Corporation

Westinghouse Electric Corporation was contracted to design, fabricate and deliver the Nuclear Steam Supply System (NSSS) and nuclear fuel for the plant. Westinghouse also provided technical assistance for installation and startup of their supplied equipment. NSSS equipment is listed in Table 3.2-2.

1.4.4 United Engineers & Constructors Inc.

United Engineers & Constructors (Philadelphia, Pennsylvania) provided engineering, design and procurement services for the balance of plant. As Construction Managers, UE&C directed construction of the plant by the various subcontractors and also provided technical assistance in the startup program when requested. In July 1984 various subcontractors were terminated and UE&C assumed responsibility for direction of the majority of the construction labor forces. Balance-of-plant equipment supplied through UE&C is listed in Table 3.2-2.

1.4.5 General Electric Company

The turbine generators for Seabrook Station were supplied by General Electric Company.

1.4.6 Major Construction Contractors

Other major construction contractors or subcontractors that provided construction services are listed below:

Organization	Construction Service
Daniel O'Connell's Sons, Inc.	Site preparation (excavation)
Phillips, Getschow Co.	Yard and fire pumphouse piping
Pittsburgh Test Laboratory	Field testing laboratory services
Perini Corporation	General concrete
Pittsburgh-DesMoines Steel Co.	Containment liner and field fabricated tanks.
Pullman Inc./J.C. Higgins Co., Inc.	Piping and mechanical equipment installation
Fischbach and Moore Inc. E.S. Boulos Div.	Electrical installation
Manzi Electrical Corp.	Electrical installation
Morrison Knudsen	Tunneling and marine work
Johnson Controls Inc.	Instrument installation
Grinnel Fire Protection Systems	Fire protection systems
Bisco	Penetration fire seals

1.4.7 Service Organizations

The services of various technical support organizations were used during the design and construction of Seabrook Station. A list of the major consultants includes the following:

Organization	Consultation Service
Weston Geophysical Research Jack Rand	Geology & seismology
American Drilling & Boring Warren George	Core Drilling
Geotechnical Engineering	Geotechnical & soils
TRC	Meteorology

Organization	Consultation Service
Dames & Moore	Hydrometeorology
Alden Research Laboratories	Hydraulic & model testing
Environmental Research & Technology	Demography
Wilbur Smith	Traffic Study
Marc Analysis Research	Computer program analysis (containment)
Wiss, Janney, Elstner & Assoc.	Containment liner anchor load test
Erlin-Himes Assoc.	Concrete test evaluation
Construction Engineering Consultants	Concrete mix design
Teledyne Engineering Services	Piping analysis
NUCON	Gaseous waste system design
Applied Research Assoc., Inc.	Tornado missile evaluations
Pickard, Lowe & Garrick	Probabilistic risk assessment
Sheridan Associates	Detailed control room design review
Impell	Environmental qualification review
Cynga	Piping analysis
Bechtel	Cable tray analysis
Ebasco	General consulting services

1.5 REQUIREMENTS FOR FURTHER TECHNICAL INFORMATION

Reference 1 presents descriptions of the safety-related research and development programs that have been carried out for, or by, or in conjunction with Westinghouse Nuclear Energy Systems, and which are applicable to Westinghouse pressurized water reactors.

The technical information generated by these research and development programs is used either to demonstrate the safety of the design and more sharply define margins of conservatism, or leads to design improvements.

Included in the overall research and development effort is the program described below that is applicable to this plant, but is not required for issuance of an Operating License.

1.5.1 Blowdown Heat Transfer Testing

1.5.1.1 Introduction

The NRC acceptance criteria for emergency core cooling systems (ECCSs) for light-water power reactors was issued in Section 50.46 of 10 CFR 50 on December 28, 1973. It defines the basis and conservative assumptions to be used in the evaluation of the performance of ECCSs. Westinghouse believes that some of the conservatism of the criteria is associated with the manner in which transient critical heat flux (CHF) phenomena are treated in the evaluation models. Transient critical heat flux data presented at the 1972 specialists meeting of the Committee on Reactor Safety Technology (CREST) indicated that the time to CHF can be delayed under transient conditions. To demonstrate the conservatism of the ECCS evaluation models, Westinghouse initiated a program to experimentally simulate the blowdown phase of a loss-of-coolant accident (LOCA). This testing was part of the Electric Power Research Institute (EPRI) sponsored Blowdown Heat Transfer Program, that was started in early 1976. Testing was completed in 1979. A CHF correlation will be developed by Westinghouse from these test results for use in the ECCS analyses.

1.5.1.2 Objective

The objective of the Blowdown Heat Transfer Test was to determine the time that CHF occurs under LOCA conditions. This information will be used to confirm the existing, or develop a new Westinghouse transient correlation. The steady-state CHF data obtained from 15x15 and 17x17 assembly test programs can be used to assure that the geometrical differences between the two fuel arrays can be correctly treated in the transient correlations.

1.5 REQUIREMENTS FOR FURTHER TECHNICAL INFORMATION

Reference 1 presents descriptions of the safety-related research and development programs that have been carried out for, or by, or in conjunction with Westinghouse Nuclear Energy Systems, and which are applicable to Westinghouse pressurized water reactors.

The technical information generated by these research and development programs is used either to demonstrate the safety of the design and more sharply define margins of conservatism, or leads to design improvements.

Included in the overall research and development effort is the program described below that is applicable to this plant, but is not required for issuance of an Operating License.

1.5.1 Blowdown Heat Transfer Testing

1.5.1.1 Introduction

The NRC acceptance criteria for emergency core cooling systems (ECCSs) for light-water power reactors was issued in Section 50.46 of 10 CFR 50 on December 28, 1973. It defines the basis and conservative assumptions to be used in the evaluation of the performance of ECCSs. Westinghouse believes that some of the conservatism of the criteria is associated with the manner in which transient critical heat flux (CHF) phenomena are treated in the evaluation models. Transient critical heat flux data presented at the 1972 specialists meeting of the Committee on Reactor Safety Technology (CREST) indicated that the time to CHF can be delayed under transient conditions. To demonstrate the conservatism of the ECCS evaluation models, Westinghouse initiated a program to experimentally simulate the blowdown phase of a loss-of-coolant accident (LOCA). This testing was part of the Electric Power Research Institute (EPRI) sponsored Blowdown Heat Transfer Program, that was started in early 1976. Testing was completed in 1979. A CHF correlation will be developed by Westinghouse from these test results for use in the ECCS analyses.

1.5.1.2 Objective

The objective of the Blowdown Heat Transfer Test was to determine the time that CHF occurs under LOCA conditions. This information will be used to confirm the existing, or develop a new Westinghouse transient correlation. The steady-state CHF data obtained from 15x15 and 17x17 assembly test programs can be used to assure that the geometrical differences between the two fuel arrays can be correctly treated in the transient correlations.

1.5.1.3 Program

The program was divided into two phases. Phase I tests were initiated from steady-state conditions, with sufficient power to maintain nucleate boiling throughout the bundle. Controlled ramps of decreasing test section pressure or flow initiated CHF. By applying a series of controlled conditions, investigation of the CHF is studied over a range of qualities and flows, and at pressures relevant to a pressurized water reactor blowdown. Phase I provided separate-effects data for heat transfer correlation development. Typical parameters used for Phase I testing are shown on Table 1.5-1.

Phase II simulates pressurized water reactor behavior during a LOCA to permit definition of the time delay associated with onset of CHF. Tests in this phase covered the large double-ended guillotine cold leg break. The test in Phase II was also started after establishment of typical steady-state operating conditions. The fluid transient was then initiated, and the rod power decay programmed to simulate the actual heat input of fuel rods. The test was terminated when the heater rod temperatures reached a predetermined limit. Typical parameters used for Phase II testing are shown on Table 1.5-2.

1.5.1.4 Test Description

The experimental program was conducted in the J-Loop at the Westinghouse Forest Hills Facility with a full length 5x5 rod bundle simulating a section of a 15x15 assembly to determine CHF occurrence under LOCA conditions.

The heater rod bundle used in this program consists of internally heated rods, capable of a maximum power of 18.8 kW/ft, with a total power of 135 kW (for extended periods) over the 12-foot heated length of the rod. Heat was generated internally by means of a varying cross-sectional resistor which approximates a chopped cosine power distribution. Each rod was adequately instrumented with a total of 12 clad thermocouples.

1.5.1.5 Results

The experiments in the J-Loop facility resulted in cladding temperature and fluid properties measured as a function of time throughout the blowdown range from 0 to 20 seconds.

Facility modifications and installation of the initial test bundle have been completed. A series of shakedown tests in the J-Loop have been performed. These tests provided data for instrumentation calibration and check-out, and provided information regarding facility control and performance. Initial program tests were performed during the first half of 1975. Under the sponsorship of EPRI, testing was reinitiated during 1976 on the same test bundle. The testing was terminated in November of 1976 and further testing with a new test bundle was conducted during 1978-79. A CHF correlation will be developed from these test results for use in the Westinghouse ECCS analyses.

1.5.2 References

1. Eggleston, F.T., "Safety-Related Research and Development for Westinghouse Pressurized Water Reactors, Program Summaries," WCAP-8768, Revision 2, October, 1978.

1.6 MATERIAL INCORPORATED BY REFERENCE

Table 1.6-1 lists topical reports with information additional to that provided in the UFSAR which have been filed separately with the Nuclear Regulatory Commission (NRC) in support of this and similar applications.

1.7 DRAWINGS AND OTHER DETAILED INFORMATION

FPLE Seabrook maintains configuration control under which selected design drawings are regularly updated to reflect changes in the facility implemented under the FPLE Seabrook and previous contractor Design Control Programs. Design drawings include the following examples:

DISCIPLINE: SYSTEMS DESCRIPTION

Piping and Instrumentation Diagram, (B series)

Data sheets for motor- and air-operated valves and dampers 1-NHY-250000

Engineering Safety Features Flow Diagram 1-NHY-804979

DISCIPLINE: INSTRUMENT AND CONTROL DIAGRAMS

Logic diagrams

Loop diagrams

Westinghouse block diagrams

Safeguard information

DISCIPLINE: ELECTRICAL

NHY schematics

Foreign prints

Control wiring diagrams (CWDs)

NHY Drawings

1) Single line diagrams
2) Substation drawings

Appendix "R" emergency lighting

Bus failure analysis

Design drawing current revision status is reflected on the Document Distribution System (DDS) Report.

The original FSAR contained tables in this section which listed all design drawing numbers, drawing titles, revision numbers and dates. This listing was voluminous and the regular updating of drawings resulted in much of the listing being out of date.

The Updated FSAR does not contain a complete list of design drawings. A cross-reference list for those figures included in the Updated FSAR is provided in Table 1.1-1.

1.8 CONFORMANCE TO NRC REGULATORY GUIDES

This section addresses the degree of conformance to each of the applicable NRC Division I regulatory guides.

Where strict conformance to the requirements or guidelines of Regulatory Guides or Standards would conflict with reasonable compliance to the ALARA guidelines of Regulatory Guide 8.8, the degree of such conformance will be determined by appropriate levels of management.

Regulatory Guide 1.1

(Rev. 0, 11/70) Net Positive Suction Head for Emergency Core Cooling and Containment Heat Removal System Pumps

The BOP design complies fully with Regulatory Guide 1.1.

The NSSS is designed to an acceptable alternative method rather than Regulatory Guide 1.1.

This subject is further discussed in Subsection 6.3.2.2.

Regulatory Guide 1.2

(Rev. 0, 11/70) Thermal Shock to Reactor Pressure Vessels

All the recommendations of Regulatory Guide 1.2 have been followed. For further discussion, refer to Section 5.3.

Regulatory Guide 1.3

(Rev. 2, 6/74) Assumptions Used for Evaluating the Potential Radiological Consequences of a Loss-of-Coolant Accident for Boiling Water Reactors

This regulatory guide is not applicable to Seabrook Station.

Regulatory Guide 1.4

(Rev. 2, 6/74) Assumptions Used for Evaluating the Potential Radiological Consequences of a Loss-of-Coolant Accident for Pressurized Water Reactors

The requirements of Regulatory Guide 1.4, Rev. 2, have been met with the following exceptions:

Section c.2.d

The iodine dose conversion factors given in ICRP Publication 2, Report of Committee II, "Permissible Dose for Internal Radiation," 1959, have not been used. Instead, the iodine dose conversion factors presented in Regulatory Guide 1.109, "Calculation of Annual Doses to Man from Routine Releases of Reactor Effluents for the Purpose of Evaluating Compliance with 10 CFR Part 50, Appendix I," USNRC (October 1977), have been used.

Section c.2.e

The equations presented for beta dose rates and gamma dose rates from an infinite cloud have not been used. Instead, external whole body gamma doses and beta plus gamma skin doses are evaluated using a semi-infinite cloud model for atmospheric dispersion and the gamma and beta dose conversion factors presented in Regulatory Guide 1.109.

A discussion of dose methodology used is presented in Appendix 15A to Chapter 15.

Section c.2.g

The atmospheric diffusion model presented has not been used. Instead, the atmospheric dispersion model presented in Regulatory Guide 1.145, "Atmospheric Dispersion Models for Potential Accident Consequence Assessments at Nuclear Power Plants" USNRC, August 1979, has been used.

A discussion of the short-term (accident) diffusion estimates is presented in Subsection 2.3.4 and Appendix 15B to Chapter 15.

Regulatory Guide 1.5

(Rev. 0, 3/71) Assumptions Used for Evaluating the Potential Radiological Consequences of a Steam Line Break Accident for Boiling Water Reactors

This regulatory guide is not applicable to Seabrook Station.

Regulatory Guide 1.6

(Rev. 0, 3/71) Independence Between Redundant Standby (Onsite) Power Sources and Between Their Distribution Systems

The design totally conforms with the recommendations of this regulatory guide.

The subject matter of this guide is discussed in Subsections 8.1.5.3.a, 8.3.1.1, 8.3.1.2 and 8.3.2.2.

Regulatory Guide 1.7

(Rev. 2, 11/78) Control of Combustible Gas Concentrations in Containment Following a Loss-of-Coolant Accident

Seabrook Station employs a large dry containment for containing fission gases and aerosols following an accident, in accordance with GDC 50. Any hydrogen generated during an accident is controlled per GDC 5, 41, 42, 43 and 10 CFR 50.44.

Regulatory Guide 1.7, Rev. 3 details an acceptable method of showing compliance with the GDC. The design of the Seabrook plant, considering the Westinghouse scope of supply, was analyzed against GDC 41 and 50, using assumptions specified in Rev. 3 of this guide.

The BOP design complies fully with Regulatory Guide 1.7, Rev. 3 and provides the capability to continuously measure the concentration of hydrogen in the containment atmosphere following a beyond-design-basis accident for accident management, including emergency planning.

Refer to Subsection 6.2.5 for further discussion of this subject.

Regulatory Guide 1.8

(Rev. 3, 5/00) Qualification and Training of Personnel for Nuclear Power Plants

Endorses ANSI/ANS-3.1-1993, Selection, Qualification, and Training of Personnel for Nuclear Power Plants, with certain clarifications, additions, and exceptions. The personnel selection, qualification, and training program meets the requirements of Regulatory Guide 1.8, Revision 3 with the following exceptions:

1. The Nuclear Oversight Manager will meet the requirements located in the FPL Quality Assurance Topical Report.

2. The Quality Control and Quality Assurance personnel positions will meet the requirements located in the FPL Quality Assurance Topical Report.

Regulatory Guide 1.9

(Rev. 2, 12/79) Selection of Diesel Generator Set Capacity Standby Power Supplies

The diesel generator design is in general conformance with the recommendations of Regulatory Guide 1.9. However, the frequencies for performing surveillances required by the Technical Specifications will be in accordance with the Surveillance Frequency Control Program.

Position C.14 requires that the engine run at full load for 22 hours, following 2 hours at short-time rated load. For Seabrook, a "Load Capability Qualification" test was performed per IEEE 387-1977. The engine was run at full load for 22 hours after reaching equilibrium temperature, followed by 2 hours at the short-time rated load.

The subject matter of this guide is discussed in Subsections 8.1.5.3.b and 8.3.1.

Regulatory Guide 1.10

(Rev. 1, 1/73) Mechanical (Cadweld) Splices in Reinforcing Bars of Category I Concrete Structures

The requirements for crew qualification, inspection, testing and sampling of mechanical splices in reinforcing bars of concrete structures comply with the regulatory positions outlined in Regulatory Guide 1.10, Rev. 1, except that retesting due to the failure of production and sister mechanical splices is in accordance with ASME Section III, Division 2, 1975 edition and Article CC-4333.4.5(b) of the Winter 1979 Addenda in lieu of the corresponding article in the 1975 code. For further discussion on this subject, refer to Subsection 3.8.1.6.

This regulatory guide was withdrawn on July 8, 1981, and superseded by Regulatory Guide 1.136, Rev. 2, 6/81.

Regulatory Guide 1.11

(Rev. 0, 3/71) Instrument Lines Penetrating Primary Reactor Containment

The design of instrument lines penetrating primary containment conforms with the intent of Regulatory Guide 1.11, except where modified by Regulatory Guide 1.141.

Additional discussion relative to containment isolation systems is provided in Subsections 6.2.4.1.d, 6.2.4.2m, 7.1.2.2a, and 7.3.1.1b.

Regulatory Guide 1.12

(Rev. 1, 4/74) Instrumentation for Earthquakes

Seismic instrumentation has been selected to provide a basis for comparing recorded response to that used as a design basis. This instrumentation is in compliance with the seismic instrumentation program described in Regulatory Guide 1.12, Rev. 1, and as applicable, ANSI 2.2, "Earthquake Instrumentation Criteria for Nuclear Power Plants." For further discussion and exceptions to Regulatory Guide 1.12, Rev. 1, see Subsections 3.7(B).4.1 and 3.7(B).4.2.

Regulatory Guide 1.13

(Rev. 1, 12/75) Spent Fuel Storage Facility Design Basis

The design complies with the intent of Regulatory Guide 1.13, Rev. 1. No loss of water from the spent fuel storage area can occur as a result of cask drop [Historical Event] and liner failure, since the spent fuel storage area is isolated by a gate during cask handling operations. See Subsection 9.1.2 for a discussion on the detailed design.

Regulatory Guide 1.14

(Rev. 1, 8/75) Reactor Coolant Pump Flywheel Integrity

The NSSS design follows the recommendations of Regulatory Guide 1.14, Rev. 1, except for the following:

a. Post-Spin Inspection

Westinghouse has shown in Reference 1 that the flywheel would not fail at 290 percent of normal speed for a flywheel flaw of 1.15 inches or less in length. Results for a double-ended guillotine break at the pump discharge, with full separation of pipe ends assumed, showed the maximum overspeed to be less than 110 percent of normal speed. The maximum overspeed was calculated in Reference 1 to be about 280 percent of normal speed for the same postulated break, and an assumed instantaneous loss of power to the reactor coolant pump. In comparison with the overspeed presented above, the flywheel is tested at 125 percent of normal speed. Thus, the flywheel could withstand a speed up to 2.3 times greater than the flywheel spin test speed of 125 percent provided that no flaws greater than 1.15 inches are present. If the maximum speed were 125 percent of normal speed or less, the critical flaw size for failure would exceed 6 inches in length. Nondestructive tests and critical dimension examinations are all performed before the spin tests. The inspection methods employed (described in Reference 1) provide assurance that flaws significantly smaller than the critical flaw size of 1.15 inches for 290 percent of normal speed would be detected. Flaws in the flywheel will be recorded in the pre-spin inspection program (see Reference 1). Flaw growth attributable to the spin tests (i.e., from a single reversal of stress, up to speed and back), under the most adverse conditions, is about three orders of magnitude smaller than that which nondestructive inspection techniques are capable of detecting. For these reasons, Westinghouse performs no post-spin inspections and believes that pre-spin test inspections are adequate.

b. Interference-Fit Stresses and Excessive Deformation

Much of Revision 1 to Regulatory Guide 1.14 deals with stresses in the flywheel resulting from the interference fit between the flywheel and the shaft. Because the NSSS design specifies a light interference fit between the flywheel and the shaft, at zero speed the hoop stresses and radial stresses at the flywheel bore are negligible. Centering of the flywheel relative to the shaft is accomplished by means of keys and/or centering devices attached to the shaft, and at normal speed, the flywheel is not in contact with the shaft in the sense intended by Revision 1 of Regulatory Guide 1.14. Hence, the definition of "Excessive Deformation," as defined in Revision 1 of Regulatory Guide 1.14, is not applicable to this design since the enlargement of the bore and subsequent partial separation of the flywheel from the shaft does not cause unbalance of the flywheel. Extensive Westinghouse experience with reactor coolant pump flywheels installed in this fashion has verified the adequacy of the design.

The combined primary stress levels, as defined in Revision 1 of Regulatory Guide 1.14 (Regulatory Positions C.2.a and C.2.c) are both conservative and proven, and no changes to these stress levels are necessary. The flywheels are designed to these stress limits and, thus, do not have permanent distortion of the flywheel bore at normal or spin test conditions.

c. Discussion B, Cross-Rolling Ratio of 1 to 3

Specification of a cross-rolling ratio is considered unnecessary since past evaluations have shown that ASME SA-533, Grade B, Class 1 materials produced without this requirement have suitable toughness for typical flywheel applications.

Proper material selection and specification of minimum material properties in the transverse direction adequately ensure flywheel integrity. An attempt to gain isotropy in the flywheel material by means of cross-rolling is unnecessary since adequate margins of safety are provided by both flywheel material selection (ASME SA-533, Grade B, Class 1) and by specifying minimum yield and tensile levels and toughness test values taken in the direction perpendicular to the maximum working direction of the material.

Regulatory Guide 1.15

(Rev. 1, 12/18/72) Testing of Reinforcing Bars for Category I Concrete Structures

The requirements for testing and inspection of reinforcing bars for all seismic Category I concrete structures comply fully with Regulatory Guide 1.15, Rev. 1. Containment reinforcing bar testing is discussed further in Subsection 3.8.1.6.

This Regulatory Guide was withdrawn on July 8, 1981, and superseded by Regulatory Guide 1.136, Rev. 2, 6/81.

Regulatory Guide 1.16

(Rev.. 4, 8/75) Reporting of Operating Information -Appendix A, Technical Specifications

The reporting of Operating Information, as required by the Technical Specifications, meets the requirements of Regulatory Guide 1.16, Rev. 4.

Regulatory Guide 1.17

(Rev. 1, 6/73) Protection of Nuclear Power Plants Against Industrial Sabotage

A security plan has been developed and implemented for the Seabrook project which meets the intent of Regulatory Guide 1.17, Rev. 1. The plan has been submitted to the NRC in a separate topical report as a proprietary document.

Regulatory Guide 1.18

(Rev. 1, 12/28/72) Structural Acceptance Test for Concrete Primary Reactor Containments

This Regulatory Guide to be used for information only. Refer to Subsection 3.8.1.7a for detailed discussion.

This regulatory guide was withdrawn on July 8, 1981, and superseded by Regulatory Guide 1.136, Rev. 2, 6/81.

Regulatory Guide 1.19

(Rev. 1, 8/72) Nondestructive Examination of Primary Containment Liner Welds

The codes and methods presented in Regulatory Guide 1.19 for nondestructive examination of primary containment welds were utilized. Inspections were performed in accordance with Article CC-5000 of Division 2 of ASME III. Refer to Subsection 3.8.1.6.

This Regulatory Guide was withdrawn on July 8, 1981, and superseded by Regulatory Guide 1.136, Rev. 2, 6/81.

Regulatory Guide 1.20

(Rev. 2, 5/76) Comprehensive Vibration Assessment Program for Reactor Internals During Preoperational and Initial Startup Testing

The recommendations of Regulatory Guide 1.20, Rev. 2, were met by conducting the confirmatory preoperational testing examination. Instrument tests are not considered necessary. For further discussion on this subject, refer to Subsection 3.9(N).2.4.

Regulatory Guide 1.21

(Rev. 1, 6/74) Measuring, Evaluating, and Reporting Radioactivity in Solid Wastes and Releases of Radioactive Materials in Liquid and Gaseous Effluents from Light-Water-Cooled Nuclear Power Plants

The design guidance of Regulatory Guide 1.21 for the selection of locations and type of effluent measurements to cover all major or potentially significant pathways of release of radioactive materials during normal reactor operation, including anticipated operational occurrences, is incorporated into the station design and the requirements of the Technical Specifications and the Offsite Dose Calculation Manual (ODCM).

UFSAR Section 11.5 describes in detail, the process and effluent monitoring system and sampling system. Technical Specifications and the Offsite Dose Calculation Manual (ODCM) delineate the radioactive liquid and gaseous waste sampling and analysis program requirements. The requirements for solid waste handling are also addressed.

The instrument calibration program for instrumentation that supports the requirements of Regulatory Guide 1.21 is described in the ODCM.

The calibration of additional instrumentation described as part of the effluent monitoring systems in UFSAR Section 11.5 will be in accordance with written station procedures.

The reporting of radioactivity in solid, liquid, and gaseous waste released from site, including the estimation impact on man, will be in accordance with station Technical Specifications and the ODCM which reference the use of Regulatory Guide 1.21 for reporting format.

Regulatory Guide 1.22

(Rev. 0, 2/72) Periodic Testing of Protection System Actuation Functions

NSSS systems meet the recommendations of Regulatory Guide 1.22, as discussed in Subsections 7.1.2.5, 8.1.5.3 and 8.3.1.

The BOP protection system design is in conformance with IEEE Standard 279-1971. All safety actuation circuitry is provided with a capability for testing with the reactor at power. The protection system, including the engineered safety features test cabinet design, complies with Regulatory Guide 1.22. Periodic testing of protection systems associated with the diesel generators is in accordance with Regulatory Guide 1.22, as supplemented by Regulatory Guide 1.108, Rev. 1.

Regulatory Guide 1.23

(Rev. 0, 2/72) Onsite Meteorological Programs

The Operational Primary Meteorological Monitoring System described in Subsection 2.3.3 conforms to Regulatory Guide 1.23 with the following exceptions:

- Since the base of the Primary Meteorological Tower is located approximately 10 feet (3 meters) below plant grade, the lower level sensors are placed 43 feet (13 meters) above ground level in order to be located 33 feet (10 meters) above plant grade.

- The Primary Meteorological Monitoring System performance requirements for wind speed, wind direction, and delta-temperature are those specified in Regulatory Guide 1.97 (Rev. 3). Compliance with these requirements is discussed in Subsection 2.3.3.

Regulatory Guide 1.24

(Rev. 0, 3/72) Assumptions Used for Evaluating the Potential Radiological Consequences of a Pressurized Water Reactor Radioactive Gas Storage Tank Failure

The design and operational bases of the Radioactive Gaseous Waste Disposal System (RGWS) preclude the unilateral assumption that the entire noble gas inventory of the Reactor Coolant System following a cold shutdown near the end of an equilibrium core is stored in one gas decay tank. The maximum activity that could be released as a result of a gas decay tank failure is the activity stored in one gas decay tank plus associated piping during the period immediately before the tank has been isolated from the RGWS. The activity is such that the offsite dose resulting from a tank failure will be well below 10 CFR 100 guidelines. The design of the RGWS prohibits the transfer of all the gaseous radioactivity in the primary coolant immediately following a cold shutdown at the end of an equilibrium core cycle to one gas decay tank. Thus, Section C.1.a of Regulatory Guide 1.24 is not valid for the analysis of the radiological consequences of a gas decay tank failure for this plant design. For additional discussion, see Subsection 15.7.1.

Regulatory Guide 1.25

(Rev. 0, 3/72) Assumptions Used for Evaluating the Potential Radiological Consequences of a Fuel Handling Accident in the Fuel Handling and Storage Facility for Boiling and Pressurized Water Reactors

The assumptions in Regulatory Guide 1.25 related to the release of radioactive material from the fuel and fuel storage facility as a result of a fuel handling accident are utilized in the accident analysis described in Subsection 15.7.4, except for the iodine removal efficiencies of the Engineered Safeguard Filter System. The iodine removal efficiencies for this system are assumed to be 95 percent for inorganic iodine and 90 percent for the organic form (see Appendix 15B), based on the design of this system as described in Subsection 6.5.1.

Site specific meteorological data are used to calculate the atmospheric dispersion concentrations in conjunction with the methods described in Section 2.3 in place of the default meteorology represented in Figure 1 of Regulatory Guide 1.25.

Regulatory Guide 1.26

(Rev. 3, 2/76) Quality Group, Classifications and Standards for Water-, Steam-, and Radioactive-Waste-Containing Components of Nuclear Power Plants

The component classification system defined in ANSI N18.2-1973 "Nuclear Safety Criteria for the Design of Stationary Pressurized Water Reactor Plants" and ANSI N18.2a - 1975 "Revision and Addendum to Nuclear Safety Criteria for the Design of Stationary Pressurized Water Reactor Plants" has been employed as an alternate method for meeting the intent of Regulatory Guide 1.26, Rev. 3.

Refer to Section 3.2 for further discussion of this subject.

Regulatory Guide 1.27

(Rev. 2, 1/76) Ultimate Heat Sink for Nuclear Power Plants

The design is committed to the availability of sufficient cooling tower makeup water in the tower basin for seven days of operation during accident conditions in the event that cooling tower water is unavailable from the main circulating water tunnels. (Regulatory Guide 1.27 requires 30 days.) During this time period, provisions can be made to transport additional makeup water to the site. If necessary, salt water can be pumped into the tower basin from the nearby Brown's River or Hampton Harbor. A portable, self priming, diesel-driven pump is stored onsite along with sufficient lengths of hose for this pump. For additional discussion, refer to Subsection 9.2.5.

Regulatory Guide 1.28

(Rev. 2, 2/79) Quality Assurance Program Requirements (Design and Construction) Endorses ANSI N45.2-1977

The quality assurance program for the BOP during design and construction for safety-related equipment, described in Subsections 17.1.1 and 17.1.2, complied with the requirements of ANSI N45.2 and satisfied Regulatory Guide 1.28, Rev. 2.

The quality assurance program implemented for the NSSS was discussed in Subsection 17.1.3.

This guide and the standard it endorses have been superseded for operations activities by Regulatory Guide 1.33 and ANSI N18.7-1976 which it endorses.

The operational phase complies with ASME NQA-1, 1994 and commitment to Regulatory Guide 1.28 (Safety Guide 28) is per the FPL Quality Assurance Topical Report section A.7.

Regulatory Guide 1.29

(Rev. 3, 9/78) Seismic Design Classification

The BOP design complies fully relative to Regulatory Guide 1.29, Rev. 3.

The NSSS design classifies each component important to safety as Safety Class 1, 2 or 3. These classes are qualified to remain functional in the event of the safe shutdown earthquake (SSE), except where exempted by meeting all of the below requirements. Portions of systems required to perform the same safety function as required of a safety Class component which is part of that system shall be likewise qualified or granted exemption. Conditions to be met for exemption are:

a. Failure would not directly cause a Condition III or IV event (as defined in ANSI N18.2-1973).

b. There is no safety function to mitigate, nor could failure prevent mitigation of, the consequences of a Condition III or IV event.

c. Failure during or following any Condition II event would result in consequences no more severe than allowed for a Condition III event.

d. Routine post-seismic procedures would disclose loss of the safety function.

For further discussion, refer to Section 3.2 and Subsection 10.4.7.

Regulatory Guide 1.31

(Rev. 3, 4/78) Control of Ferrite Content in Stainless Steel Weld Metal

The BOP design complies with the intent of Regulatory Guide 1.31, Rev. 3. Refer to Subsection 6.1.1.

The control of delta ferrite in stainless steel welding for NSSS equipment is discussed in Subsection 5.2.3.

Regulatory Guide 1.32

(Rev. 2, 2/77) Criteria for Safety-Related Electric Power Systems for Nuclear Power Plants

The safety-related electric power systems design conforms with the recommendations of Regulatory Guide 1.32, Rev. 2, with the following exceptions:

The response to Regulatory Guide 1.75 in this UFSAR Subsection addresses conformance to Regulatory Guide 1.75 which is referenced in Regulatory Guide 1.32 Positions C.1.d and C.1.e.

Regulatory Guide 1.32 states in Position C.1.c that "That battery service test described in IEEE Std 450-1975 should be performed in addition to the battery performance discharge test." The Technical Specifications require service tests at least once per 18 months and performance discharge tests at least once per 60 months. However, the Technical Specifications allow the performance discharge test to be performed in lieu of (not in addition to) the service test once per 60 month interval.

Regulatory Guide 1.32 states in Position C.1.c that "The battery service test should be performed during refueling operations or at some other outage, with the intervals between tests not to exceed 18 months."

The Technical Specifications permit the battery service test to be performed during non-outage periods. The Seabrook Station design incorporates two 100% capacity battery banks per train. Removing one of these battery banks from service for surveillance testing does not reduce the system capabilities. The Regulatory Guide assumes only one 100% capacity battery bank per train.

The subject matter of Regulatory Guide 1.32 is further discussed in Subsections 8.1.5.3, 8.3.1 and 8.3.2.

Regulatory Guide 1.33

(Rev. 2, 2/78) Quality Assurance Program Requirements (Operation)

See FPL Quality Assurance Topical Report

Regulatory Guide 1.34

(Rev. 0, 12/72) Control of Electroslag Weld Properties

Where electroslag welding is used in fabricating components, vendors are required to follow the recommendations of Regulatory Guide 1.34.

Regulatory Guide 1.35

(Rev. 2, 1/76 Inservice Surveillance of Ungrouted Tendons in Prestressed Concrete Containment Structures

This guide is not applicable, since a steel reinforced concrete containment structure is used.

Regulatory Guide 1.36

(Rev. 0, 2/73) Nonmetallic Thermal Insulation for Austenitic Stainless Steel

The design complies with the recommendations of this guide.

For further discussion, refer to Subsection 6.1.1.

Regulatory Guide 1.40

(Rev. 0, 3/73) Qualification Tests of Continuous-Duty Motors Installed Inside the Containment of Water-Cooled Nuclear Power Plants

The qualification test recommendations of Regulatory Guide 1.40 have been followed. Details of the qualification of specific motors are contained in Reference 15. Refer to Section 3.11 for additional discussion of environmental qualification.

Regulatory Guide 1.41

(Rev. 0, 3/73) Preoperational Testing of Redundant Onsite Electrical Power Systems to Verify Proper Load Group Assignments

Testing will conform with the recommendations of Regulatory Guide 1.41.

The subject matter of this guide is further discussed in Subsections 14.2.7* and 14.2.12.

Regulatory Guide 1.42

(Rev. 1, 3/74) Interim Licensing Policy on As Low As Practicable for Gaseous Radioiodine Releases from Light-Water-Cooled Nuclear Power Reactors

This regulatory guide was withdrawn by the NRC on March 18, 1976.

Regulatory Guide 1.43

(Rev. 0, 5/73) Control of Stainless Steel Weld Cladding of Low-Alloy Steel Components

For the NSSS, the same purpose of Regulatory Guide 1.43 is achieved by requiring qualification of any high heat input process, such as the submerged-arc wide-strip welding process and the submerged-arc 6-wire process used on ASME SA-508, Class 2, material, with a performance test as described in Regulatory Position 2 of the guide. No qualifications are required by the regulatory guide for ASME SA-533 material and equivalent chemistry for forging grade ASME SA-508, Class 3, material.

The fabricator monitors and records the weld parameters to verify agreement with the parameters established by the procedure qualification as stated in Regulatory Position C.3.

Production weld cladding for safety-related BOP components complies with the fabrication requirements specified in Sections III and IX of the ASME Boiler and Pressure Vessel Code. The supplementary criteria identified in Regulatory Guide 1.43 were also implemented to give reasonable assurance that underclad cracking was avoided in production weld cladding.

Regulatory Guide 1.44

(Rev. 0, 5/73) Control of the Use of Sensitized Stainless Steel

Compliance with the regulatory positions of Regulatory Guide 1.44 relative to the NSSS is discussed in part in Subsection 5.2.3.4. Compliance with the regulatory positions of this document is as follows:

a. The use of processing, packaging and shipping controls, and preoperational cleaning to preclude adverse effects of exposure to contaminants on all stainless steel materials are in accordance with Regulatory Position C.1.

b. Austenitic stainless steel materials are utilized in the final heat-treated conditions required by the respective ASME Code, Section II, material specifications for the particular type or grade of alloy in accordance with Regulatory Position C.2.

c. The position concerning material inspection programs and Regulatory Position C.3 is discussed in Subsection 5.2.3.4.

d. The intent of Regulatory Position C.4 is met as discussed in detail in Subsection 5.2.3.4. Exception (b) to Regulatory Position C.4 is covered in the discussion of delta ferrite in Subsection 5.2.3.4.

e. Conformance with Regulatory Position C.5 is as discussed in Subsection 5.2.3.4. Exception (a) to Regulatory Position C.5 is covered in the discussion of delta ferrite in Subsection 5.2.3.4.

f. Conformance with Regulatory Position C.6 is in the manner discussed in Subsection 5.2.3.4.

Conformance to Regulatory Guide 1.44 relative to the BOP is achieved by imposing detailed requirements on subcontractors and their material suppliers covering processing, welding, heat treatment, cleaning and packaging. Procedures covering these activities during fabrication and erection require engineering review. Although weld procedure qualification test assemblies will not be corrosion-tested as recommended by the guide, sensitization during welding is minimized by prohibiting post-weld stress relief, and by controlling weld heat input. Welding procedures include restrictions governing voltage, amperage, interpass temperature, weaving, and travel speed for automatic process. For applications involving aggressive environments, low carbon stainless steel is specified.

Regulatory Guide 1.45

(Rev. 0, 5/73) Reactor Coolant Pressure Boundary Leakage Detection System

The design of the Reactor Coolant Pressure Boundary Leakage Detection System complies with Regulatory Guide 1.45. The regulatory position taken in the guide has been incorporated into the design of the Leakage Detection System.

For additional discussion on this subject, see Subsection 5.2.5.

Regulatory Guide 1.46

(Rev. 0, 5/73) Protection Against Pipe Whip Inside Containment

This Regulatory Guide was withdrawn by the NRC on 3/11/85. It has been "superseded" by NUREG-0800, Section 3.6 requirements.

The design against pipe whip is discussed in Section 3.6.

Regulatory Guide 1.47

(Rev. 0, 5/73) Bypassed and Inoperable Status Indication for Nuclear Power Plant Safety Systems

Provisions have been made in the design of the Plant Safety Systems to meet the intent of Regulatory Guide 1.47.

Automatic indication, at the system level, of bypassed and inoperable status of safety systems has been provided in the control room. Once activated, the system-level indication will remain on until the activating condition is cleared. Manual system level indication is also provided in the control room for those systems whose complexity increases the possibility of having frequent inoperable conditions that are not monitored by the automatic system.

Additional discussion on this subject is presented in Section 7.1 and Subsection 8.1.5.3b.

Regulatory Guide 1.48

(Rev. 0, 5.73) Design Limits and Loading Combinations for Seismic Category I Fluid System Components

NSSS components are designed using the stress limits and loading combinations presented in Section 5.2 and Subsection 3.9(N).1 for ASME Code Class 1 components and in Subsection 3.9(N).3 for ASME Code Class 2 and 3 components. The conservatism in these limits and the associated ASME design requirements precludes any component structural failure.

The operability of active ASME Code Class 1, 2 and 3 valves and active ASME Code Class 2 and 3 pumps (there are no active Class 1 pumps) will be verified by methods detailed in Section 5.2 and Subsection 3.9(N).1 for ASME Code Class 1 components and in Subsection 3.9(N).3 for ASME Code Class 2 and 3 components.

The use of the above-stated methods provides an acceptable alternate method to meeting the guidance of this regulatory guide.

The design stress limits and loading combinations for BOP seismic Category I fluid system components are presented in Subsection 3.9(B).3.1 for the various plant operating conditions, as defined by the subject regulatory guide. The structural integrity of the fluid system components is ensured by the conservatism in these stress limits which are in accordance with industry practice and ASME Section III design requirements.

The assurance of operability of active ASME Code Class 2 and 3 pumps and ASME Code Class 1, 2 and 3 valves are qualified by the approaches delineated in Subsection 3.9(B).3.2.

The methods cited above provide an acceptable program to satisfy the intent of the subject regulatory guide.

Regulatory Guide 1.49

(Rev. 1, 12/73) Power Levels of Nuclear Power Plants

The design complies with the recommendations of Regulatory Guide 1.49, Rev. 1, since the projected initial power level is less than 3800 megawatts thermal (MWt), and analyses and evaluation consider operation at 102 percent rated core power level, which is less than the level in this regulatory guide.

For further discussion, refer to Section 1.1.

Regulatory Guide 1.50

(Rev. 0, 5/73) Control of Preheat Temperature for Welding of Low-Alloy Steel

Relative to the NSSS, this regulatory guide is considered as applicable to ASME Code, Section III, Class 1 components.

The practice for NSSS Class 1 components is in agreement with the recommendations of Regulatory Guide 1.50, except for Regulatory Positions C.1.b and C.2. For Class 2 and 3 NSSS components, the recommendations of Regulatory Guide 1.50 are not considered applicable. In the case of Regulatory Position C.1.b, the welding procedures are qualified within the preheat temperature ranges required by Section IX of the ASME Code. NSSS experience has shown excellent quality of welds using the ASME qualification procedures.

In the case of Regulatory Position C.2, the NSSS position documented in Reference 6 has been found acceptable by the NRC.

Weld fabrication of low alloy steel components for the BOP complies with the fabrication requirements specified in Sections III and IX of the ASME Boiler and Pressure Vessel Code.

Regulatory Guide 1.51

Inservice Inspection of ASME Code Class 2 and 3 Nuclear Power Plant Components

This guide was withdrawn on July 21, 1975.

Regulatory Guide 1.52

(Rev. 2, 3/78) Design, Testing and Maintenance Criteria for Post-Accident Engineered Safety Feature Atmosphere Cleanup System Air Filtration and Adsorption Units of Light-Water-Cooled Nuclear Power Plants

The design complies with this guide, with Regulatory Guide 1.140 and/or with the exceptions discussed in Subsection 6.5.1 and Table 6.5-1, Table 6.5-2 and Table 6.5-3.

Regulatory Guide 1.53

(Rev. 0, 6/73) Application of the Single-Failure Criterion to Nuclear Power Plant Protection Systems

NSSS systems meet the recommendations of Regulatory Guide 1.53, in accordance with the discussion provided in Subsection 7.1.2.7.

The BOP design complies with the guidance provided in Regulatory Guide 1.53. Refer to Subsection 7.1.2.7 for the discussion on Regulatory Guide 1.53 and to Chapter 7 for the definition of BOP systems and for reference to sections where pertinent discussions can be found.

Regulatory Guide 1.54

(Rev. 0, 6/73) Quality Assurance Requirements for Protective Coatings Applied to Water-Cooled Nuclear Power Plants

Endorses ANSI N101.4-1972

NSSS equipment located in the Containment Building is separated into four categories to identify the applicability of this regulatory guide to various types of equipment. These categories of equipment are as follows:

Category 1 - Large equipment

Category 2 - Intermediate equipment

Category 3 - Small equipment

Category 4 - Insulated/stainless steel equipment.

A discussion of each equipment category follows:

a. Category 1 - Large Equipment

The Category 1 equipment consist of the following:

Reactor Coolant System supports

Reactor coolant pumps (motor and motor stand)

Accumulator tanks

Manipulator crane.

Since this equipment has a large surface area and is procured from only a few vendors, it is possible to implement tight controls over these items.

Stringent requirements have been specified for protective coatings on the NSSS equipment through the use of a painting specification in procurement documents. This specification defines requirements for:

1. Preparation of vendor procedures
2. Use of coating systems which are qualified to ANSI N101.2
3. Surface preparation
4. Application of the coating systems in accordance with the paint manufacturer's instructions
5. Inspections and nondestructive examinations
6. Exclusion of certain materials
7. Identification of all nonconformances
8. Certifications of compliance.

The vendor's procedures are subject to review by NSSS engineering personnel, and the vendor's implementation of the specification requirements is monitored during the Westinghouse quality assurance surveillance activities relative to the NSSS.

This system of controls provides assurance that the protective coatings will properly adhere to the base metal during prolonged exposure to a post-accident environment present within the Containment Building.

b. Category 2 - Intermediate Equipment

The Category 2 equipment consists of the following:

Seismic platform and tie rods
Reactor internals lifting rig
Head lifting rig
Electrical cabinets.

Since these items are procured from a large number of vendors, and individually have very small surface areas, it is not practical to enforce the complete set of stringent requirements which are applied to Category 1 items. However, another specification has been implemented in the NSSS procurement documents. This specification defines to the vendors the requirements for:

1. Use of specific coating systems which are qualified to ANSI N101.2

2. Surface preparation

3. Application of the coating systems in accordance with the paint manufacturer's instructions.

The vendor's compliance with the requirements is also checked during the NSSS quality assurance surveillance activities in the vendor's plant. These measures of control provide a high degree of assurance that the protective coatings will adhere properly to the base metal and withstand the postulated accident environment within the Containment Building.

c. Category 3 - Small Equipment

Category 3 equipment consists of the following:

Transmitters
Alarm horns
Small instruments
Valves
Heat exchanger supports.

These items are procured from several different vendors and are painted by the vendor in accordance with conventional industry practices. Because the total exposed surface area is very small, no further requirements are specified.

d. Category 4 - Insulated or Stainless Steel Equipment

Category 4 equipment consists of the following:

Steam generators - covered with blanket insulation
Pressurizer - covered with blanket insulation
Reactor pressure vessel - covered with rigid reflective or blanket insulation
Reactor cooling piping - stainless steel
Reactor coolant pump casings - stainless steel.

Since Category 4 equipment is insulated or is stainless steel, no painted surface areas are exposed within the containment.

Therefore, this regulatory guide is not applicable for Category 4 equipment.

Protective coatings provided for the BOP, except for acceptably limited and inventoried coatings on non-NSSS equipment, piping and structures, are in accordance with ANSI N101.4 "Quality Assurance for Protective Coatings Applied to Nuclear Facilities," used in conjunction with ANSI N45.2 "Quality Assurance Program Requirements for Nuclear Power Plants," and therefore meet Regulatory Guide 1.54.

During the operations phase, compliance with the regulatory guide also includes the following clarification:

a. When the requirements of ANSI N101.4 apply, specific requirements, such as documented site meetings, field demonstrations, substrate priming, applicator reporting, inspection reporting and report forms will be considered on a job-by-job basis and invoked only where found to provide a meaningful QA contribution to that task.

b. When 10 percent or less of the surface of the item requires coating, it is considered to be touch-up work and only a general conformance to these requirements will be necessary.

Regulatory Guide 1.55

(Rev. 0, 6/73) Concrete Placement in Category I Structures

The placement of concrete for seismic Category I structures complies with Regulatory Guide 1.55, Rev. 0, except that the documents referenced in the appendix to the guide were used for guidance only, as appropriate. Use of the Maturity Method (correlating strength to integrated temperature-time history) is permitted for monitoring curing of concrete placements (except containment). When this method is implemented to determine in-place strength, curing temperatures can be reduced to 40°F, as permitted by Paragraph 3.2.3 of ACI 308. Temperature control is maintained at least until the placement attains 70 percent of the design strength, in accordance with Paragraph 12.2.3 of ACI 301. The subject is further discussed in Subsections 3.8.1.6 and 3.8.3.6.

This regulatory guide was withdrawn on July 8, 1981 and superseded by Regulatory Guides 1.136 Rev. 2, 6/81 and 1.142.

Regulatory Guide 1.56

Rev. 1, 7/78) Maintenance of Water Purity in Boiling Water Reactors

This regulatory guide is not applicable to Seabrook Station.

Regulatory Guide 1.57

(Rev. 0, 6/73) Design Limits and Loading Combinations for Metal Primary Reactor Containment System Components

The design complies with Regulatory Guide 1.57, Rev. 0, requirements for the personnel lock, the equipment hatch, and the piping and electrical penetrations inside and outside the containment which are not backed by concrete.

This guide is not considered applicable to other portions of the containment system.

The subject is further discussed in Subsection 3.8.2.

Regulatory Guide 1.59

(Rev. 2, 8/77; Errata 7/80) Design Basis Floods for Nuclear Power Plants

The recommendations of Regulatory Guide 1.59, Rev. 2, have been followed relative to design basis flooding. The Probable Maximum Precipitation analysis indicates that the site may develop ponding, but that all safety-related structures are not adversely affected. A protective revetment has been designed and constructed to safeguard the site and safety-related facilities from the predicted Probable Maximum Surge level.

For further discussion, refer to Section 2.4.

Regulatory Guide 1.60

(Rev. 1, 12/73) Design Response Spectra for Seismic Design of Nuclear Power Plants

The recommendations of Regulatory Guide 1.60, Rev. 1, have been followed for the BOP design with the following comments and/or exceptions:

a. The vibratory ground motions represented by the design response spectra are assumed as free-field surface motions because the design response spectra were derived from analysis of historic ground motions recorded at or near ground surface.

b. Because the vertical design response spectra are presented as scaled to lg horizontal ground acceleration, it is implicitly, but inadvertently, required that the vertical peak ground acceleration equal the horizontal peak ground acceleration. The assumption of the peak vertical acceleration being two-thirds of the peak horizontal acceleration has been acceptable to the NRC. Therefore, to follow the intent of the regulatory guide appropriately, the vertical design response spectra are modified for frequencies greater than 33 Hz, as shown in the Figure 1.8-1. For further discussion, refer to Subsections 2.5.2.6 and 3.7(B).1.1.

The design response spectra of Regulatory Guide 1.60 are acceptable for the NSSS, with the damping values recommended and approved by the NRC in Reference 7 for use in dynamic analysis of NSSS equipment. For further discussion, refer to Subsection 3.7(N).1.1.

Regulatory Guide 1.61

(Rev. 0, 10.73) Damping Values for Seismic Design of Nuclear Power Plants

The damping values of Regulatory Guide 1.61 have, in general, been fully complied with in the BOP design. For further discussion, refer to Subsection 3.7(B).1.3.

Relative to the NSSS, the damping values listed in Regulatory Guide 1.61 are considered acceptable with the single exception of the large piping systems faulted condition value of 3 percent critical. Higher damping values, when justified by documented test data, have been provided for the Regulatory Position C.2. A conservative value of 4 percent critical has therefore been justified by testing for the NSSS reactor coolant loop configuration in Reference 7, and has been approved by the NRC.

For pipe stress verification and for pipe support optimization, the damping values of ASME B&PV Code, Code Case N-411, may be used in lieu of the values listed in Regulatory Guide 1.61.

For further discussion, refer to Subsection 3.7(N).1.3.

Regulatory Guide 1.62

(Rev. 0, 10/73) Manual Initiation of Protective Actions

The NSSS protection system meets the recommendations of this regulatory guide, in accordance with the comments of Subsection 7.3.2.2.

The BOP portion of the protection system was designed, built and tested in accordance with IEEE Standard 279-1971, and complies with Regulatory Guide 1.22 and 1.62. The design of the protection system includes the following:

a. Manual initiation of each protective action is provided at the system level, in addition to the means to initiate protective action at the component level.

b. Manual initiation of the protective actions at the system level perform all functions carried out by the automatic initiation signal to the actuating devices, and provide the required action, such as sequencing functions and interlocks.

c. The switches for manual initiation of protective actions at the system level are located in the main control room.

d. The amount of equipment common to both manual and automatic initiation has been minimized. The single failure criterion has been satisfied.

For further discussion, refer to Section 7.3.

Regulatory Guide 1.63

(Rev. 2, 7/78) Electric Penetration Assemblies in Containment Structures for Light-Water-Cooled Nuclear Power Plants

The design conforms to the recommendations of Regulatory Guide 1.63, Rev. 2, with certain clarifications which are discussed further in Subsections 3.8.2, 8.1.5, 8.3.1.1 and 8.3.1.2.

Regulatory Guide 1.65

(Rev. 0, 10/73) Materials and Inspections for Reactor Vessel Closure Studs

Westinghouse is in agreement with Regulatory Guide 1.65 except for material and tensile strength guidelines.

Westinghouse has specified both 45 ft-lb and 25 mils lateral expansion for control of fracture toughness determined by Charpy-V testing, required by the ASME Boiler and Pressure Vessel Code, Section III, Summer 1973 Addenda and 10 CFR Part 50, Appendix G (July 17, 1973, Paragraph IV.A.4). These toughness requirements assure optimization of the stud bolt material tempering operation with the accompanying reduction of the tensile level when compared with previous ASME Boiler and Pressure Vessel Code requirements.

The specification of both impact and maximum tensile strength as stated in the guide results in unnecessary hardship in procurement of material without any additional improvement in quality.

The closure stud bolting material is procured to a minimum yield strength of 130,000 psi and a minimum tensile strength of 145,000 psi. This strength level is compatible with the fracture toughness requirements of 10 CFR Part 50, Appendix G (July, 1973, Paragraph 1.C), although higher strength level bolting materials are permitted by the code. Stress corrosion has not been observed in reactor vessel closure stud bolting manufactured from material of this strength level. Accelerated stress corrosion test data do exist for materials of 170,000 psi minimum yield strength exposed to marine water environments stressed to 75 percent of the yield strength (given in Reference 2 of the guide). These data are not considered applicable to Westinghouse reactor vessel closure stud bolting because of the specified yield strength differences and a less severe environment; this has been demonstrated by years of satisfactory service experience.

The ASME Boiler and Pressure Vessel Code requirement for toughness for reactor vessel bolting has precluded the guide's additional recommendation for tensile strength limitation, since to obtain the required toughness levels, the tensile strength levels are reduced. Prior to 1972, the Code required a 35 ft-lb toughness level which provided maximum tensile strength levels ranging from approximately 155 to 178 kpsi (Westinghouse review of limited data – 25 heats). After publication of the Summer 1973 Addenda to the Code and 10 CFR Part 50, Appendix G, wherein the toughness requirements were modified to 45 ft-lb with 25 mils lateral expansion, all bolt material data reviewed on Westinghouse plants showed tensile strengths of less than 170 kpsi.

The in-service inspection program described in Subsection 5.2.4 provides an acceptable alternate method to following the guidance of this regulatory guide.

Regulatory Guide 1.66

(Rev. 0, 10.73) Nondestructive Examination of Tubular Products

This regulatory guide was withdrawn by the NRC on September 28, 1977.

Regulatory Guide 1.67

(Rev. 0, 10/73) Installation of Overpressure Protection Devices

The design criteria for safety valve stations fully conform to the requirements of Regulatory Guide 1.67. For further discussion, refer to Subsection 3.9(B).3.3.

Regulatory Guide 1.68

(Rev. 2, 8/78) Initial Test Programs for Water-Cooled Reactor Power Plants

The initial test program was conducted in accordance with the intent of Regulatory Guide 1.68, with the exceptions discussed in Subsection 14.2.7.

Regulatory Guide 1.68.1

(Rev. 1, 1/77) Preoperational and Initial Startup Testing of Feedwater and Condensate Systems for Boiling Water Reactor Power Plants

This regulatory guide is not applicable to Seabrook Station.

Regulatory Guide 1.68.2

(Rev. 1, 7/78) Initial Startup Test Program to Demonstrate Remote Shutdown Capability for Water-Cooled Nuclear Power Plants

The remote shutdown capability was demonstrated in accordance with the intent of Regulatory Guide 1.68.2, Rev. 1. For discussion, refer to Subsection 14.2.6.

Regulatory Guide 1.69

(Rev. 0, 12/73) Concrete Radiation Shields for Nuclear Power Plants

The design of the concrete radiation shields fully complies with Regulatory Guide 1.69, Rev. 0. The applicable documents, design loads and design approach presented in ANSI N101.6-1972 were used in the design.

For further discussion, refer to Subsections 3.8.3.1, 3.8.3.2 and 3.8.3.4.

Regulatory Guide 1.70

(Rev. 3, 11/78) Standard Format and Content of Safety Analysis Reports for Nuclear Power Plants-LWR Edition

The FSAR and Updated FSAR were prepared using the recommended format and content of Regulatory Guide 1.70, Rev. 3, with the exception of a listing of any unusually hazardous materials to be used on site that could present unexpected fire hazards or complicate firefighting activities. Regulatory Guide 1.70, Rev. 3, was issued prior to the issuance of 10 CFR 50 - Appendix R "Fire Protection Program for Nuclear Power Facilities Operating Prior to January 1, 1979." As such, the unexpected fire hazards, fire brigade training and the storage and/or use of combustible materials concerns that were addressed in Regulatory Guide 1.70 have been addressed in expanded detail in 10 CFR 50 - Appendix R. 10 CFR 50 - Appendix R, by reference, is part of the UFSAR.

Regulatory Guide 1.71

(Rev. 0, 12/73) Welder Qualification for Areas of Limited Accessibility

NSSS practice does not require qualification or requalification of welders for areas of limited accessibility as described by Regulatory Guide 1.71. Experience shows that the current NSSS shop practice produces high quality welds. In addition, the performance of required nondestructive evaluations provides further assurance of acceptable weld quality.

Limited accessibility qualification or requalification in excess of ASME Code, Section III or IX requirements is considered an unduly restrictive requirement for NSSS component fabrication, where the welders' physical position relative to the welds is controlled and does not present any significant problems. In addition, shop welds of limited accessibility are repetitive due to multiple production of similar components, and such welding is closely supervised.

For field application, the type of qualification should be considered on a case-by-case basis due to the great variety of circumstances encountered.

This guide was also not followed for the BOP for the following reasons: "Limited Accessibility" welds, which we define as welds inaccessible from at least 12 inches in any direction, will be identified by contractors and would require us to provide extensive surveillance and field supervision of the affected areas.

Contract specifications require that contractors, regardless of the code requirement, consider the necessity of special inspection techniques.

Qualification alone does not ensure the integrity of welds in limited areas, nor does a continual audit of the welder for the correct application of procedure parameters and welder technique ensure the integrity of production welds. The integrity of welds has been assured by nondestructive examination or special inspection techniques during fabrication and baseline inspections.

For Operational Phase activities under the scope of the Operational QA Program, PSNH welder qualification will comply with the requirements of this regulatory guide, with the following clarifications:

a. With regard to Section C.1 of the regulatory guide, selected welders may, in addition to the normal qualifications, be trained and qualified for limited access conditions.

b. With regard to Section C.2.a of the regulatory guide, when a limited access weld must be performed, the judgment of experienced supervisory personnel will be used to determine whether the above noted additional qualification is satisfactory for the given task, or whether additional training and qualifications for the specific configuration is required.

Regulatory Guide 1.72

(Rev. 2, 11/78) Spray Pond Piping Made From Fiberglass-Reinforced Thermosetting Resin

This guide is not applicable to Seabrook Station.

Regulatory Guide 1.73

(Rev. 0, 1/74) Qualification Tests of Electric Valve Operators Installed Inside the Containment of Nuclear Power Plants

This regulatory guide endorses IEEE 382-1972, and provides some additional clarification in the area of accessories, such as solenoid valves and limit switches. Qualification of valve appurtenances, such as motor operators, solenoid valves and limit switches, is in accordance with this Regulatory Guide. Details of the qualification of specific motor operators, solenoid valves and limit switches are contained in Reference 15.

For NSSS safety-related motor-operated valves located inside containment, environmental qualification is performed in accordance with IEEE Standards 382-1972 and 323-1974. The qualification program for valve-related equipment is described in Reference 9. Refer to Section 3.11 for additional discussion of environmental qualification.

Regulatory Guide 1.75

(Rev. 2, 9/78) Physical Independence of Electric Systems

The design is consistent with the criteria for physical independence of electrical systems established in "Attachment C" of AEC letter dated December 14, 1973 (see Updated FSAR Appendix 8A) and is in general conformance with Regulatory Guide 1.75, Rev. 2, except as follows:

Battery Room Ventilation. Although the four Class 1E batteries are housed in separate safety Class structures, they represent only two redundant load groups (see Subsection 8.3.2). Each load group is served by a separate safety-related ventilation system. There is a cross-tie between the two ventilation systems to allow one system to serve both load groups in case the other system is inoperable. Fire dampers are provided to isolate each battery room.

The subject of this regulatory guide is further discussed in Subsections 8.1.5.3 and 8.3.1.2.

The NSSS and BOP furnished systems comply with the recommendations of Regulatory Guide 1.75, Rev. 2, as discussed in Subsection 7.1.2.2.

The requirements of position C4, as it relates to cables for the associated circuits is clarified as follows:

Instrumentation, control and power cables used for the associated circuits will not be covered by the Operational Quality Assurance Program (OQAP). However, pragmatic controls will be applied to these items. The actual implementation of these controls will be defined by the programs manuals used to control specific activities at Seabrook Station. Implementation of these programmatic will be verified by Quality Assurance personnel to the extent necessary to insure proper application. For further details on provisions and considerations for the associated circuits, see Updated FSAR Chapter 8, Subsection 8.3.1.4b.1(d).*

The Seabrook cable and raceway separation criteria (see Updated FSAR Subsection 8.3.1.4) is a combination of the standard criteria given in Attachment C of AEC Letter dated December 14, 1973 (see Updated FSAR Appendix 8A) and IEEE 384-1974 and criteria established by analysis and testing as permitted by Attachment C and IEEE 384-1974.

Regulatory Guide 1.76

(Rev. 0, 4/74) Design Basis Tornado for Nuclear Power Plants

The structural designs for withstanding the design basis tornado fully comply with the recommendations of Regulatory Guide 1.76, Rev. 0. For further discussion, refer to Section 3.5 and Subsections 3.3.2, 3.8.1 and 3.8.4.

Regulatory Guide 1.77

(Rev. 0, 5.74) Assumptions Used for Evaluating a Control Rod Ejection Accident for Pressurized Water Reactors

Methods and criteria are documented in Reference 3 and 8, which has been reviewed and accepted by the NRC.

The results of analyses show agreement with Regulatory Positions C.1 and C.3. However, exception has been taken to Regulatory Position C.2 which implies that the rod ejection accident should be considered as an emergency condition. This is considered a faulted condition as stated in ANSI N18.2. Faulted condition stress limits are applied for this accident. This is an acceptable alternate method to following the guidance of this regulatory guide. For further discussion, refer to Subsection 15.4.8.

Regulatory Guide 1.78

(Rev. 1, 12/01)
(Rev. 0, 6/74) Assumptions for Evaluating the Habitability of a Nuclear Power Plant Control Room During a Postulated Hazardous Chemical Release

As explained in Section 2.2, there are no significant manufacturing plants, chemical plants, refineries, storage facilities, mining, and quarrying operations, oil pipelines, wells or storage facilities identified within a five-mile radius of the site. Local natural gas pipelines within the five-mile radius of the site have been evaluated for potential impact to plant operation. The evaluation has concluded that there is no impact from accidental release of natural gas.

Section 2.2 also provides information regarding transportation facilities and available data regarding the use of these transportation facilities.

Based on available information, it is concluded that the requirements of Regulatory Guide 1.78 are met.

Rev. 0 of Regulatory Guide 1.78 was followed for evaluations prior to December 2008. Any evaluations done after this date are in compliance with Regulatory Guide 1.78 Rev. 1. Also, prior to December 2008, Regulatory Guide 1.95, "Protection of Nuclear Power Plant Control Room Operators Against Accidental Chlorine Release", was followed for evaluated chlorine hazards to the Control Room. As of December 2008, Regulatory Guide 1.78, Rev. 1 is followed for evaluation of potential chlorine hazards.

Regulatory Guide 1.79

(Rev. 1, 9/75) Preoperational Testing of Emergency Core Cooling Systems for Pressurized Water Reactors

The initial preoperational test program will be conducted in accordance with the intent of Regulatory Guide 1.79, with the exceptions discussed in Subsection 14.2.7.

For further discussion, refer to Section 14.2.

Regulatory Guide 1.80

(Rev. 0, 6/74) Preoperational Testing of Instrument Air Systems

The initial test program has been conducted in accordance with the intent of Regulatory Guide 1.80, with the exceptions discussed in Subsection 14.2.7.

For further discussion, refer to Section 14.2.

Regulatory Guide 1.81

(Rev. 1, 1/75) Shared Emergency and Shutdown Electric Systems for Multi-Unit Nuclear Power Plants

The power system design is in conformance with the recommendations of Regulatory Guide 1.81, Rev. 1. Seabrook Station is a single unit plant; therefore no portion of the power system is shared.

Regulatory Guide 1.82

(Rev. 0, 6/74) Sumps for Emergency Core Cooling and Containment Spray Systems

The sump design meets the intent of the positions of Regulatory Guide 1.82. Guidance from Regulatory Guide 1.82, Revision 3, and NEI 04-07, Pressurized Water Reactor Sump Performance Evaluation Method, was used to size and evaluate the replacement ECCS/CBS sump strainers. For further discussion, refer to Subsection 6.2.2.2.

Regulatory Guide 1.83

(Rev. 1, 7/75) Inservice Inspection of Pressurized Water Reactor Steam Generator Tubes

The steam generators are designed to permit access to tubes for inspection and/or plugging. The in-service inspection program is discussed in Subsection 5.4.2.5 and in the Technical Specifications.

Regulatory Guide 1.84

(all revisions) Design and Fabrication Code Case Acceptability - ASME Section III Division I

This regulatory guide is used for the BOP design where applicable. The ASME Code Case interpretations were used for design and fabrication after they had been reviewed to assure that their use would not compromise the component design or reliability. Table 1.8-2 lists specific Code Cases, not included in this Regulatory Guide, for which authorization to use was requested of, and granted by, the NRC.

The NSSS suppliers have:

a. Limited the use of Code Cases to those listed in Regulatory Position C.1 of Regulatory Guides 1.84 and 1.85, except as allowed below.

b. Identified and requested permission for use of any Code Cases not listed in Regulatory Position C.1 of Regulatory Guides 1.84 and 1.85 where use of such Code Cases is needed by the supplier.

c. Permitted continued use of a Code Case considered acceptable at the time of equipment order, where such Code Case was subsequently annulled or amended.

NRC permission has been requested for the use of Class 1 Code Cases needed by NSSS suppliers and not then endorsed in Regulatory Position C.1 of Regulatory Guides 1.84 and 1.85, and permits supplier use only if NRC permission is obtained or is otherwise assured (e.g.; a later version of the regulatory guide includes endorsement).

Regulatory Guide 1.85

(all revisions) Materials Code Case Acceptability - ASME Section III Division I

Refer to the discussion of Regulatory Guide 1.84.

Regulatory Guide 1.85 requires that components and supports be identified that use Code Case N242-1. The code case is applied to safety relief valves, thermowells, and generically to supports. The use of the code case is documented in the data reports.

Regulatory Guide 1.86

(Rev. 0, 6/74) Termination of Operating Licenses for Nuclear Reactors

Applicability of this guide is considered premature.

Regulatory Guide 1.87

(Rev. 1, 6/75) Guidance for Construction of Class 1 Components in Elevated Temperature Reactors (Supplement to ASME Section III Code Cases 1592, 1593, 1594, 1595 and 1596)

This regulatory guide is not applicable to Seabrook Station.

Regulatory Guide 1.89

(Rev. 1, 6/84) Qualification of Class 1E Equipment for Nuclear Power Plants

The guidance provided by Regulatory Guide 1.89, which endorses IEEE 323-1974 with certain exceptions, i.e., source terms and the use of IEEE 344-1971, has been followed for the BOP equipment except for those instances discussed below:

a. Qualification of Class 1E electrical, instrumentation and control equipment meets the requirements of IEEE 323-1974, with exceptions. Further discussion regarding qualification is provided in Sections 3.10, 3.11 and Reference 15.

   Exceptions: Turbine trip-related inputs to the Reactor Trip System consist of the following:

   1. Turbine stop valve position

   2. Turbine Electro-Hydraulic System fluid pressure

   3. Turbine impulse chamber pressure.

   This equipment was tested in accordance with the guidelines of IEEE Standard 323-1974.

b. The total integrated radiation doses to be used in qualification of the Class 1E equipment will be a combination of normal operating environment and post-accident environment, with credit taken for locations, shielding and the time for which the equipment is required to perform its function.

   Values of integrated doses to be used in the qualification of Class 1E equipment are given in Reference 15.

For the safety-related equipment located inside the containment and required after a LOCA, the sources used in establishing the integrated dose are consistent with Regulatory Guide 1.89, Rev. 0. Both instantaneous gamma and beta doses have been considered in establishing the integrated doses.

The seismic qualification of electrical, instrumentation and control equipment meets the requirements of IEEE 344-1975.

Conformance of NSSS Class 1E equipment with IEEE Standard 323-1974 (including IEEE Standard 323A-1975 position statement of July 23, 1975) and Regulatory Guide 1.89 is being demonstrated by an appropriate combination of any or all of the following: type testing, operating experience, qualification by analysis and on-going qualification programs. This commitment is being satisfied by implementation of Reference 9.

Regulatory Guide 1.90

(Rev. 1, 8/77) Inservice Inspection of Prestressed Concrete Containment Structures with Grouted Tendons

This guide is not applicable to Seabrook Station since grouted tendons are not employed.

Regulatory Guide 1.91

(Rev. 1, 2/78) Evaluation of Explosions Postulated to Occur on Transportation Routes Near Nuclear Power Plants

The guidance provided by Regulatory Guide 1.91, Rev. 1, has been followed. For further discussion, refer to Section 2.2.

Regulatory Guide 1.92

(Rev. 1, 2/76) Modes and Spatial Components in Seismic Response Analyses

The procedure for combining modal responses for NSSS equipment is presented in Subsection 3.7(N).3.2. This procedure is considered as an alternate acceptable solution that provides a basis for findings requisite to issuance or continuance of a permit or license by the NRC.

The procedure used for BOP equipment design fully conforms with the guidance of Regulatory Guide 1.92, Rev. 1, relative to seismic system analysis. The requirements for the combination of modes and spatial components in seismic subsystem analyses also complies with this guide, except that closely spaced modes for seismic analyses of components by the normal mode approach are combined in accordance with the two methods indicated in Subsection 3.7(B).3.6.

Regulatory Guide 1.92 presents three other means of combining closely spaced modes. Justification for nonconformance is that the methods prescribed in the guide are not here applicable since the construction permit application docket date is before the date of issue of the guide. In addition, the method used is deemed more conservative. For further discussion, refer to Section 3.7(B) and Subsection 3.7(B).3.7.

Regulatory Guide 1.93

(Rev. 0, 12/74) Availability of Electric Power Sources

The Technical Specification (T/S) ac and dc power sources allowable out-of-service times (action statements) are based on RG 1.93. Where differences exist between the T/S and RG 1.93, the T/S are the governing document.

RG 1.93 does not allow out-of-service times to be used for preventative maintenance that incapacitates a power source. These activities are to be scheduled for refueling or shutdown periods. This is interpreted to also apply to surveillance activities. Preventative maintenance and surveillance activities are performed on-line when permitted by the T/S and with appropriate consideration of the effects on safety, reliability, and availability.

Regulatory Guide 1.95

(Rev. 1, 2/77) Protection of Nuclear Power Plant Control Room Operators Against Accidental Chlorine Release

The relevant portions of Regulatory Guide 1.95 are complied with based on the findings that the plant design does not include the storage of chlorine within 100 meters of the control room, excluding small laboratory quantities, nor is there chlorine stored in excess of the maximum allowable chlorine inventory, as given as a function of distance in Regulatory Guide 1.95 for Type I control rooms (refer to Subsection 2.2.3.1).

Regulatory Guide 1.95 is superseded by Regulatory Guide 1.78, Rev. 1, "Assumptions for Evaluating the Habitability of a Nuclear Power Plant Control Room During a Postulated Hazardous Chemical Release". [See the discussion under RG 1.78.]

Regulatory Guide 1.96

(Rev. 1, 6/76) Design of Main Steam Isolation Valve Leakage Control Systems for Boiling Water Reactor Nuclear Power Plants

This regulatory guide is not applicable to Seabrook Station.

Regulatory Guide 1.97

(Rev. 3, 5/83) Instrumentation for Light-Water-Cooled Nuclear Power Plants to Assess Plant Conditions During and Following an Accident

Regulatory Guide 1.97, Revision 3 endorses ANSI/ANS-4.5-1980, "Criteria for Accident Monitoring Functions in Light-Water-Cooled Reactors." With minor exceptions, the above guidance has been followed in providing Accident Monitoring Instrumentation (AMI). These exceptions are specified in Subsection 7.5.4.

A complete description of the Seabrook AMI is provided in Section 7.5.

Regulatory Guide 1.98

(Rev. 0, 3/76) Assumptions Used for Evaluating the Potential Radiological Consequences of a Radioactive Offgas System Failure in a Boiling Water Reactor

This regulatory guide is not applicable to Seabrook Station.

Regulatory Guide 1.99

(Rev. 2, 5/88) Effects of Residual Elements on Predicted

The reactor vessel material meets the end-of-life reference criterion of Regulatory Guide 1.99, Rev. 2.

Regulatory Guide 1.100

(Rev. 1, 8/77) Seismic Qualification of Electric Equipment for Nuclear Power Plants

The program for seismic qualification of NSSS safety-related electric equipment is delineated in Reference 9.

BOP electric equipment has been seismically qualified in accordance with the intent of the guidance provided in Regulatory Guide 1.100, Rev. 1.

For further discussion, refer to Section 3.10(B).

Regulatory Guide 1.101

(Rev. 2, 10/81) Emergency Planning for Nuclear Power Plants

The Seabrook Station Radiological Emergency Plan was developed based on the requirements of Appendix E to 10 CFR 50 and Revision 1 of NUREG-0654/FEMA-REP 1; therefore, the recommendations of this regulatory guide have been followed with the exceptions noted below:

- The acceptance criteria for the meteorological monitoring system meet the intent of Regulatory Guide 1.23 (Rev. 0) and Regulatory Guide 1.97 (Rev. 3). Exceptions are discussed in Section 1.8 (see Regulatory Guides 1.23 and 1.97).

- The atmospheric transport and diffusion assessment capabilities are described in Section 10.1 of the Seabrook Station Radiological Emergency Plan.

- The capability to remote interrogate all systems producing meteorological data and effluent transport and diffusion estimates by emergency response organizations is not available.

The Seabrook Station Radiological Emergency Plan complies with the requirements of 10 CFR 50, Appendix E, and is based on the criteria in NUREG-0654/REP-1, Rev. 1, with the following clarifications and exceptions:

1. 10 CFR 50, Appendix E, Section IV.D.3. requires licensees to have the capability to notify responsible state and local governmental agencies within 15 minutes after declaring an emergency. For a radiological emergency at Seabrook Station, Massachusetts and New Hampshire state governments are responsible for deciding protective actions to be recommended to the public and for initiating public alert and notification. Therefore, Seabrook Station maintains the capability to notify Massachusetts and New Hampshire state authorities within 15 minutes after declaring an emergency. This capability does not include notification of local governmental agencies. Under the state radiological emergency response plans, the states are responsible for notifying local governmental agencies.

2. NUREG-0654/FEMA-REP-1, Rev. 1, criterion B.5 states that licensees shall have the capability to staff on-shift emergency response functions and to augment on-shift emergency response capabilities in accordance with NUREG-0654, Table B-1. The Seabrook Station On-Shift Emergency Response Organization (ERO) includes one health physics technician versus two specified by Table B-1. The Seabrook Station Augmented ERO does not include eleven (11) 30-minute responders specified on Table B-1. It was determined that the functions specified on Table B-1 could be addressed by on-shift personnel or that no emergency planning related provisions or station procedures require the use of these personnel prior to activation of emergency facilities. (Ref. NRC IR 94-15 and NRC letter to T.C. Feigenbaum dated March 6, 1995.)

3. NUREG-0654/FEMA-REP-1, Rev. 1, criterion J.7 states that licensees shall establish a mechanism for recommending protective actions to appropriate state and local authorities in accordance with the recommendations set forth in the Manual of Protective Action Guides and Protective Actions for Nuclear Incidents (EPA-520/1-75-001). EPA-520/1-75-001 and the protective action guides therein have been superseded by EPA 400, Manual of Protective Action Guides and Protective Actions for Nuclear Incidents, 1991. The SSREP follows the protective action recommendation guidance in EPA 400 and in NUREG-0654/FEMA-REP-1, Rev. 1, Supplement 3, November 2011. The guidance of Supplement 3 provides an acceptable method to comply with Appendix E to Part 50, Title 10 of the Code of Federal Regulations (10 CFR) Section IV, paragraph 3 in the use of evacuation time estimates in the formulation of protective action recommendations (PARs) for the plume exposure emergency planning zone, and provides guidance for the provisions of 10 CFR 50.47(b)(10) in the development of a range of PARs. Supplement 3 also provides guidance to support the information in NUREG-0654/FEMA-REP-1 that the U.S. Nuclear Regulatory Commission finds to be an acceptable method of meeting the requirements in 10 CFR 50.47(b)(7) for the development of a public information program.

4. NUREG-0654/FEMA-REP-1, Rev. 1, criterion J.10.a states that radiological emergency plans shall include maps of evacuation areas, relocation centers in host areas and shelter areas. These details are included in the Massachusetts and New Hampshire Radiological Emergency Response Plans only. The Massachusetts and New Hampshire plans are referenced in the SSREP.

5. NUREG-0654/FEMA-REP-1, Rev. 1, criterion J.10.m states that radiological emergency plans shall include expected local protection afforded by residential units or other shelter for direct and inhalation exposure. See exception number 3 above.

6. NUREG-0654/FEMA-REP-1, Rev. 1, criterion O.2 states that the training program for members of the onsite emergency organization shall, besides classroom training, include practical drills. The listed attributes of these practical drills are as follows:

   - Each individual demonstrates his/her ability to perform his/her assigned emergency function.

   - On-the-spot correction of erroneous performance and demonstration of proper performance by the instructor.

Candidates for the Seabrook Station ERO are required to complete applicable training and a position-specific qualification guide prior to being assigned to the ERO. The process of administering a qualification guide to a candidate includes the attributes noted above, including a proficiency demonstration with applicable procedures and equipment. All such demonstrations are supervised and assessed by a qualified instructor. Where needed, the instructor corrects erroneous performance and demonstrates proper performance.

7. NUREG-0654/FEMA-REP-1, Rev. 1, criterion P.5 states that revised pages of emergency plans shall be dated and marked to show where changes have been made. The Seabrook Station manuals and procedures administration program requires that manual (the SSREP is a manual) and procedure changes shall be delineated in a figure or section titled "Summary of Changes" that is created and updated for each revision or change. This is done in lieu of revision bars and individually dated pages. The SSREP also contains a list of effective pages (LOEP) allowing the user to identify the current revision number applicable to each page.

8. NUREG-0654/FEMA-REP-1, Rev. 1, criterion P.8 recommends that plans submitted for review should be cross-referenced to NUREG-0654 criteria. The SSREP contains a cross-reference to NUREG-0654 criteria. The cross-reference is submitted with plan changes only if the changes cause the cross-reference to change. If the cross-reference is not submitted with a plan change, the extant cross-reference in the SSREP continues to reference correctly where the SSREP addresses NUREG-0654 criteria.

9. NUREG-0654/FEMA-REP-1, Rev. 1, Appendix 1, Example Initiating Condition Alert #4 reads: "Steam line break with significant (e.g., greater than 10 gpm) primary to secondary leak rate (PWR) or MSIV malfunction causing leakage (BWR)." The Seabrook Station Emergency Classification System (SSECS) does not include an initiating condition that explicitly addresses this example initiating condition. The SSECS incorporates Seabrook Station specific initiating conditions that address applicable aspects of Example Initiating Condition Alert #4.

10. NUREG-0654/FEMA-REP-1, Rev. 1. Appendix 1, Example Initiating Condition Alert #9 reads: "Coolant pump seizure leading to fuel failure." The SSECS does not include this initiating condition, because this condition is subsumed under series 8 EALs in the SSECS that consider fuel failure conditions for any cause. There are no specific diagnostics in the Seabrook Station emergency response procedures that tell Control Room operators that a coolant pump seizure has occurred. Under the SSECS, the amount of reactor coolant system activity from the failed fuel would drive the emergency classification rather than the cause of the fuel failure. This approach is consistent with guidance in NRC memorandum, Branch Position on Acceptable Deviations to Appendix 1 to NUREG-0654/FEMA-REP-1, dated July 11, 1994.

11. NUREG-0654/FEMA-REP-1, Rev. 1, Appendix 3 states that every year, or in conjunction with an exercise, FEMA, in cooperation with the utility operator, and/or the state and local governments will take a statistical sample of residents within about 10 miles to assess the public's ability to hear the sirens and their awareness of the meaning of the prompt notification message and availability of public information. Based on subsequent FEMA guidance, Guidance Memorandum AN-1, April 1987, FEMA has not conducted, nor required, an additional statistical survey for the Seabrook Station Public Alert and Notification System following the initial system acceptance test.

12. NUREG-0654/FEMA-REP-1, Rev. 1, Appendix 3 suggests the following type and frequency of siren tests: (1) silent test every two weeks; (2) growl test quarterly and when preventive maintenance is performed; and (3) a complete cycle test annually and as required for formal exercises. The Seabrook Station siren system testing program does not include a quarterly growl test or annual complete cycle test, because the capability of each siren to receive an activation signal to rotate for a full cycle and to emit an alert tone is tested every two weeks using vendor designed ultra-sonic "Silent Test®" circuitry.

13. NSIR/DPR-ISG-01 (November 2011) provided updated guidance to NUREG-0654 with regard to conducting off-hours drills and exercises. Seabrook complies with the guidance found in NSIR/DPR-ISG-01, specifically that provisions are made to start a drill or exercise between 6:00 p.m. and 4:00 a.m. at least once in every eight-year exercise cycle and that some drills or exercises should be unannounced.

Regulatory Guide 1.102

(Rev. 1, 9/76) Flood Protection for Nuclear Power Plants

The flood protection design reflects full compliance with the guidance presented in Regulatory Guide 1.102, Rev. 1. For further discussion, refer to Section 2.4 and Subsection 3.4.1.

Regulatory Guide 1.103

(Rev. 1, 10/76) Post-Tensioned Prestressing Systems for Concrete Reactor Vessels and Containments

This regulatory guide is not applicable to Seabrook Station. It was with-drawn on July 8, 1981 and superseded by Regulatory Guide 1.136, Rev. 2, 6/81.

Regulatory Guide 1.104

(Rev. 0, 2/76) Overhead Crane Handling Systems for Nuclear Power Plants

This regulatory guide was withdrawn by the NRC on August 16, 1979.

Regulatory Guide 1.105

(Rev. 1, 11/76) Instrument Spans and Setpoints

The recommendations of this regulatory guide have been followed with the following exceptions and clarifications:

> The Technical Specifications for limiting safety system settings provide the margin from the nominal setpoint to the Technical Specification allowable value to account for drift when measured at the rack during periodic testing. The allowances between the Technical Specification allowable value and the safety limit include the following items: (a) the inaccuracy of the instrument, (b) process measurement accuracy, (c) uncertainties in the calibration, (d) the potential transient overshoot determined in the accident analyses (this may include compensation for the dynamic effect) and (e) environmental effects on equipment accuracy caused by postulated or limiting postulated events (only for those systems required to mitigate consequences of an accident). The setpoints were chosen for Seabrook so that the accuracy of the instrument is adequate to meet the assumptions of the safety analysis.

The range of instruments has been chosen based on the span necessary for the instrument's function. Narrow range instruments are being used where necessary. Instruments have been selected based on expected environmental and accident conditions. Qualification testing of instrumentation has been performed as necessary to verify the functionality of the instruments.

Seismic qualification testing has verified that setpoint securing devices are not required to maintain accuracy or minimize setpoint changes. Integral setpoint securing devices have not been supplied.

The assumptions used in selecting the setpoint values in Regulatory Position C.1, and the minimum margin with respect to the Technical Specification limit and calibration uncertainty, are documented in the setpoint calculations.

BOP safety-related setpoints have been established using the same methodology as was used for the NSSS setpoints.

Regulatory Guide 1.106

(Rev. 1, 3/77) Thermal Overload Protection for Electric Motors on Motor-Operated Valves

Overload protection is in conformance with the recommendations of Regulatory Guide 1.106, Rev. 1. The subject matter of this guide is further discussed in Subsections 8.1.5.3 and 8.3.1.1.

Regulatory Guide 1.107

(Rev. 1, 2/77) Qualifications for Cement Grouting for Prestressing Tendons in Containment Structures

This guide is not applicable to Seabrook Station.

Regulatory Guide 1.108

(Rev. 1, 8/77)
(Errata 9/77) Periodic Testing of Diesel Generators Used As Onsite Electric Power Systems at Nuclear Power Plants

The diesel generator testing is in conformance with the recommendations of Regulatory Guide 1.108 except as noted below.

The requirements of position C.1.c are met with the following exception:

> Temporary jumpers are used on a limited basis during the performance of periodic tests for the emergency diesel generators.

The above exception to Regulatory Guide 1.108 is determined to be acceptable because the NRC has previously accepted the use of temporary jumpers for testing of protection system circuits addressed in UFSAR Section 7.1.2.11.d. This position is further supported by the discussion in SER Section 7.3.2.14. The NRC based its acceptance on the combination of explicit test procedures and administrative controls (independent second-person verification) which met the guidelines in NRC IE Information Notice No. 84-37, Use of Lifted Leads and Jumpers During Maintenance or Surveillance Testing. These guidelines provide reasonable assurance that the instrumentation will be restored to the correct configuration following testing. The use of jumpers is minimized and is performed only where permanent hardware changes are not practical or cannot be justified.

The requirements of position C.2.a(5) were met for preoperational testing as follows:

> The functional capability at full load temperature was demonstrated by performing the test outlined in position C.2.a(l) and (2) immediately following the full load carrying capability test described in position C.2.a(3). The full load carrying capability of position C.2.c(2) was demonstrated for greater than or equal to five minutes.

The above exception to Regulatory Guide 1.108 met the intent of position C.2.a(5) by demonstrating the capability of the diesel generator to start and accept load at full load temperature.

The requirements of position C.2.a(3) will be met on an interval specified in the Surveillance Frequency Control Program as follows:

> Full load carrying capability will be verified by operating the diesel generator at a load of greater than or equal to 5600 kW and less than or equal to 6100 kW. The 2 hour rating of the diesel generator will be verified by operating the diesel generator at a load of greater than or equal to 6363 kW and less than or equal to 6700 kW.

The above exception to Regulatory Guide 1.108 meets the intent of position (3) by demonstrating that the diesel generators are capable of carrying approximate full load for an interval of not less than 24 hours.

The requirements of position C.2.a(5) will be met on an interval specified in the Surveillance Frequency Control Program as follows:

> The functional capability at full load temperature will be demonstrated by verifying that the diesel generator will start from a manual or automatic start signal within five minutes of shutdown following the 24 hour surveillance run. The generator voltage and frequency shall be 4160 ± 420 volts and 60 ± 1.2 Hz within 10 seconds after the start signal, and the diesel generator shall be operated for at least five minutes.[***]

The above exception to Regulatory Guide 1.108 meets the intent of position (5) by demonstrating the capability of the diesel generator to start at normal operating temperature.

The periodic testing requirements of C.2.c(2) will be met as follows:

> Full load carrying capability will be verified by periodically running the diesel generator at a load of greater than or equal to 5600 kW and less than or equal to 6100 kW for at least 60 minutes.

The above exception to Regulatory Guide 1.108 meets the intent of position (2) by demonstrating that the diesel generators are capable of carrying approximate full load for a period of not less than 60 minutes.

The periodic testing interval requirements of position C.2.d will be met as follows:

> The periodic testing interval will be no more than 31 days per T/S 4.8.1.1.2.a. The corrective actions for a test failure will be determined by the maintenance rule emergency diesel generator performance criteria.

The above exception to Regulatory Guide 1.108 meets the intent of position C.2.d by maintaining the periodic test interval and ensuring that adequate corrective actions are implemented if a test failure occurs.

The records and reporting requirements of position C.3.b will be met as follows:

[***] If the diesel generator fails to start during this test, then it is not necessary to repeat the preceding 24-hour test. Instead, the diesel generator may be operated at greater than or equal to 5600 kW and less than or equal to 6100 kW for 2 hours or until operating temperature has stabilized. The load range is provided to preclude routine overloading of the diesel generator. Momentary transients outside the load range, due to changing bus conditions, do not invalidate the test.

Significant emergency diesel generator failures will be reported in accordance with the provisions of 10 CFR 50.72 and 50.73. Footnote 3 in position C.3.b references Regulatory Guide 1.16. UFSAR Section 1.8 documents compliance with Regulatory Guide 1.16.

The above exception to Regulatory Guide 1.108 meets the intent of position C.3.b by providing NRC notification of diesel generator failures in accordance with the licensee's reporting requirements.

For further discussion, refer to Subsections 8.1.5.3 and 8.3.1.1 and Regulatory Guide 1.22.

Regulatory Guide 1.109

(Rev. 1, 10/77) Calculation of Annual Doses to Man From Routine Releases of Reactor Effluents for the Purpose of Evaluating Compliance With 10 CFR Part 50, Appendix I

This guide describes NRC-suggested models and assumptions for estimating the doses to humans from radioactivity expected to be routinely discharged from the plant to the hydrosphere and atmosphere during normal operation. To demonstrate compliance with the "As Low As Is Reasonably Achievable" dose criteria of 10 CFR 50, Appendix I, all dose calculations have used the suggested models and assumptions of this regulatory guide. The details of the dose evaluations are provided in Subsections 11.2.3 and 11.3.3.

Regulatory Guide 1.110

(Rev. 0, 3/76) Cost-Benefit Analysis for Radwaste Systems Systems for Light-Water-Cooled Nuclear Power Reactors

This regulatory guide describes an acceptable method for performing a cost benefit analysis for liquid and gaseous radwaste system components to demonstrate compliance with Section II.D of Appendix I to 10 CFR 50. However, on September 4, 1975 (F.R.172), the Commission amended Appendix I of 10 CFR 50 to allow applicants who filed applications for construction permits for light-water-cooled nuclear power reactors which were docketed on or after January 2, 1971, and prior to June 4, 1976, the option of dispensing with the cost-benefit analysis required by Paragraph II.D of Appendix I. This option permits an applicant to design radwaste management systems to satisfy the Guides on Design Objectives for Light-Water-Cooled Nuclear Power Reactors proposed in the Concluding Statement of Position of the Regulatory Staff in Docket RM-50-2, dated February 20, 1974. As indicated in the Statement of Considerations included with the amendment, the Commission noted it is unlikely that further reductions to radioactive material releases would be warranted on a cost-benefit basis for light-water-cooled nuclear power reactors having radwaste systems and equipment determined to be acceptable under the proposed staff design objectives set forth in RM-50-2.

In a letter to the Commission dated October 8, 1975, Public Service Company of New Hampshire chose to comply with the Commission's September 4, 1975 amendment to Appendix I, eliminating the necessity to perform a cost-benefit analysis as required by Paragraph II.D of Appendix I. Therefore, Regulatory Guide 1.110 is not applicable to the Seabrook design evaluation.

Regulatory Guide 1.111

(Rev. 1, 7/77) Methods for Estimating Atmospheric Transport and Dispersion of Gaseous Effluents in Routine Releases from Light-Water-Cooled Reactors

Atmospheric dispersion of routine gaseous effluent releases are calculated using a computer code, as described in Subsection 2.3.5, which is based, in part, on Regulatory Guide 1.111 modeling methodology and applicable procedures.

Regulatory Guide 1.112

(Rev. O-R, 4/76; Reissued 5/77) Calculation of Releases of Radioactive Materials in Gaseous and Liquid Effluents from Light-Water-Cooled Power Reactors

The objective of this guide is to provide an acceptable method of calculating realistic radioactive source terms for the evaluation of radioactive waste treatment systems in determining whether the design objectives of Appendix I to 10 CFR 50 are met and in determining the impact of radioactive effluents on the environment. The regulatory guide references NUREG-0017 (PWR-GALE computer code) as an acceptable method for the calculation of radioactive source terms from PWRs. For Seabrook, expected annual average liquid and gaseous radioactive effluents have been estimated utilizing the PWR-GALE code in conformance with this regulatory guide. Subsections 11.2.3 and 11.3.3 list the calculated radioactive releases for liquid effluents and gaseous effluents, respectively.

Regulatory Guide 1.113

(Rev. 1, 4/77) Estimating Aquatic Dispersion of Effluents from Accidental and Routine Reactor Releases for the Purpose of Implementing Appendix I

The aquatic dispersion of effluents was estimated as recommended by Regulatory Guide 1.113, Revision 1, using results from physical model studies and an analytical dispersion model.

The initial dilution (nearfield region) was estimated using results from physical model studies of the thermal discharge performed by Alden Research Laboratories (Reference 13). The model was a 1 to 115 undistorted Fronde model in which temperature rise patterns were measured. Because very little heat transfer occurs in the nearfield region of the model, the initial dilution of any effluent constituent can be determined from the temperature rise reduction as given by the physical model.

The farfield concentration of effluent constituents was estimated using an analytical dispersion model developed by Brocard and Kirby (Reference 14). This model was run with zero heat transfer to simulate the release of a conservative constituent.

Regulatory Guide 1.114

(Rev. 1, 11/76) Guidance on Being Operator at the Controls of a Nuclear Power Plant

The criteria for being a control room operator comply with the requirements of NRC Regulatory Guide 1.114, Rev. 1. For further discussions, refer to Sections 13.1 and 13.2.

Regulatory Guide 1.115

(Rev. 1, 7/77) Protection Against Low-Trajectory Turbine Missiles

The plant design conforms to Regulatory Guide 1.115, Rev. 1, except for Position 4. The probability of damage due to low trajectory missiles is greater than the required 10^{-3}. For further discussion, refer to Subsection 3.5.1.3.

Regulatory Guide 1.117

(Rev. 1, 4/78) Tornado Design Classification

The plant design complies with Regulatory Guide 1.117, Rev. 1.

Although the condensate storage tank is not designed for missiles or a pressure drop, the system will function if the tank fails because the shield wall is designed for missiles and is waterproofed to contain water from the tank.

The Ultimate Heat Sink Cooling Tower is not designed for tornado missiles. The primary source for water is the Atlantic Ocean through the underground tunnels, which will function during a tornado event.

For further discussion on this subject, refer to Section 3.5.

Regulatory Guide 1.118

(Rev. 1, 11/77; Rev. 2, 6/78 and Rev. 3, 4/95) Periodic Testing of Electric Power and Protection Systems

The 1E electric power and safety system testing will comply with Regulatory Guide 1.118, Rev. 1.

Detailed clarifications on the regulatory positions are presented below:

a. Regulatory Position C.2

"Protective Action Systems" is interpreted to mean the electric, instrumentation and controls portions of those protection systems and equipment actuated and controlled by the protection system.

b. Regulatory Position C.6

Equipment performing control functions, but actuated from protection system sensors, is not part of the safety system and will not be tested for time response.

c. Regulatory Position C.10

Testing, although not tied to accident conditions, will be tied to the range of the parameter that is varied. This range is determined by expected design basis event conditions and anticipated operational occurrences.

d. Regulatory Position C.11

Status, annunciating, display, and monitoring functions, except for those related to the Post-Accident Monitoring System (PAMS), are considered to be control functions. Reasonability checks, i.e., comparison between or among similar such display functions, will be made. Otherwise, the clarification note in Item b above, pertaining to Position C.6, is observed.

e. Regulatory Positions C.12 and C.13

Response time testing for control functions operated from protection system sensors will not be performed. Nuclear Instrumentation System detectors will not be tested for time response. (See TS Technical Requirement 1 of the Technical Requirements Manual.)

f. Regulatory Position C.14

Position C.14 has the same requirement as position C.6 of Regulatory Guide 1.1118, Revision 2. Refer to the discussion for position C.6 of Regulatory Guide 1.1118, Revision 2.

Additional clarifications with regard to IEEE 338-1975 are included in Subsection 7.1.2.11.

The 1E electric power and safety system design and testing will also conform to the guidance of Regulatory Guide 1.118, Rev. 2, and the requirements of IEEE 338-1977 with the following clarifications:

a. "Protective Action Systems" is defined to mean the electric, instrumentation and controls portions of those protection systems and equipment actuated and controlled by the protection system.

b. Equipment performing control functions, but actuated from protection system sensors is not part of the safety system and will not be tested for time response.

c. Status, annunciating, display, and monitoring functions, except those related to the Post-Accident Monitoring Systems (PAMS) are considered to be control functions. Reasonability checks, i.e., comparison between or among similar such display functions, will be made.

d. Regulatory Position C.6

Position C.6 states that temporary jumpers may be used with portable test equipment where the safety system equipment to be tested is provided with facilities specifically designed for connection of this test equipment. The intention of this position is to ensure that test setups are of a quality that does not degrade the equipment and that makeshift test setups are not used.

Temporary jumpers are used on a limited basis during the performance of periodic tests for various electric power and protection systems. Regulatory Guide 1.118 does not provide details on what constitutes facilities specifically designed for connection of test equipment. When temporary jumpers are used during testing, they are connected via devices that are suitable for ensuring a reliable connection to the equipment under test. Certain points of connection may not have been specifically designed for the connection of test equipment, but the points are evaluated for acceptability for each application. This meets the intent of the regulatory position to ensure that makeshift test setups are not used. For additional information on the use of temporary jumpers, refer to the discussion under Regulatory Guide 1.108.

The 1E electric power and safety system design and testing will also conform to the guidance of Regulatory Guide 1.118, Rev. 3, specifically for exclusion of testing for process to sensor coupling (flow testing). IEEE 338-1977 stated that response time testing of the process to sensor coupling was not required. Regulatory Guide 1.118, Rev. 2 indicated that the process to sensor coupling test was under evaluation. The Regulatory Guide 1.118, Rev. 3 now endorses the position taken in IEEE 338-1977, that response time testing of the process to sensor coupling is not required.

Regulatory Guide 1.119

(Rev. 0, 6/76) Surveillance Program for New Fuel Assembly Designs

This regulatory guide was withdrawn by the NRC on June 23, 1977.

Regulatory Guide 1.120

(Rev. 1, 11/77) Fire Protection Guidelines for Nuclear Power Plants

Regulatory Guide 1.120 has been issued to provide information to applicants regarding the NRC staff's plans for using this regulatory guide and to solicit public comment. Branch Technical Position APCSB 9.5-1, which is part of the Standard Review Plan (NUREG-75/087), formed the basis for the regulatory guide. Branch Technical Position APCSB 9.5-1, has been revised to Branch Technical Position CMEB 9.5-1, which now contains provisions of Regulatory Guide 1.120; 10 CFR 50, Appendix R; and Branch Technical Position APCSB 9.5-1. This revised Branch Technical Position is now used in the evaluation of fire protection provisions of applicants currently under review for operating licenses for plants under construction.

The existing plant design complies with the Branch Technical Position CMEB 9.5-1 with the exceptions as depicted in "Fire Protection System Evaluation and Comparison to Branch Technical Position APCSB 9.5-1, Appendix A," Rev. 2, and "Fire Protection of Safe Shutdown Capability (10 CFR 50, App. R)," Rev. 1, submitted to the USNRC in August 1984.

Regulatory Guide 1.121

(Rev. 0, 8/76) Bases for Plugging Degraded PWR Steam Generator Tubes

Position C.1

Westinghouse interprets the term "Unacceptable defects" to apply to those imperfections resulting from service induced mechanical or chemical degradation of the tube walls which have penetrated to a depth in excess of the Plugging Limit.

Positions C.2a(2) and C.2.a(4)

Westinghouse will use a 200 percent margin of safety based on the following definition of tube failure. Westinghouse defines tube failure as plastic deformation of a crack to the extent that the sides of the crack open to a nonparallel, elliptical configuration. This 200 percent margin of safety compares favorably with the 300 percent margin requested by the NRC against gross failure.

Position C.2.b

In cases where sufficient inspection data exist to establish degradation allowance, the rate used will be an average time-rate determined from the mean of the test data.

Where requirements for minimum wall are markedly different for different areas of the tube bundle, e.g., U-bend area versus straight length in Westinghouse designs, two plugging limits may be established to address the varying requirements in a manner which will not require unnecessary plugging of tubes.

Positions C.3.d(l) and C.3.d(3)

The combined effect of these requirements would be to establish a maximum permissible primary-to-secondary leak rate which may be below the threshold of detection with current methods of measurement.

Westinghouse has determined the maximum acceptable length of a through-wall-crack based on secondary pipe break accident loadings which are typically twice the magnitude of normal operating pressure loads. Westinghouse will use a leak rate associated with the crack size determined on the basis of accident loadings.

Position C.3.e(6)

Westinghouse will supply computer code names and references rather than the actual codes.

Position C.3.f(l)

Westinghouse will establish a minimum acceptable tube wall thickness (Plugging Limit) based on structural requirements and consideration of loadings, measurement accuracy and, where applicable, a degradation allowance as discussed in this position and in accordance with the general intent of this guide. Analyses to determine the maximum acceptable number of tube failures during a postulated condition are normally done to entirely different bases and criteria are not within the scope of this guide.

Regulatory Guide 1.122

(Rev. 1, 2/78) Development of Floor Response Spectra for Seismic Design of Floor-Supported Equipment or Components

The plant design conforms to Regulatory Guide 1.122, Rev. 1, with the following exception:

Regulatory Guide 1.122 requires peaks associated with structural frequencies be broadened by ±0.15 f_i. Seabrook Preliminary Safety Analysis Report Subsection 3.7.2.6 stated that "to account for variations in structural parameters the peaks on the floor response spectra will be widened by ±10 percent."

The justification for this exception is that Regulatory Guide 1.122 was published after the PSAR was submitted. The "implementation" section of Regulatory Guide 1.122 states that it is presently being used "in the evaluation of submittals for construction permit applications." In addition, Regulatory Guide 1.122 states that the +0.15 f_i broadening is to account for such parameters as "material properties of soil . . . and soil structure interaction techniques." Since the Seabrook Plant is founded on rock, the uncertainties associated with soil properties and soil modeling are not of any concern, and less conservative peak broadening is justified.

Regulatory Guide 1.124

(Rev. 1, 1/78) Service Limits and Loading Combinations for Class 1 Linear-Type Component Supports

The Seabrook NSSS is in partial compliance with this regulatory guide, with the following clarifications/variations:

a. The regulatory guide states in Paragraph B.1(b): "Allowable design limits for bolted connections are derived from tensile and shear stress limits and their nonlinear interaction; they also change with the size of the bolt. For this reason, the increases permitted by NF-3231.1, XVII-2110(a), and F-1370(a) of Section III are not directly applicable to allowable shear stresses and allowable stresses for bolts and bolted connections," and in Paragraph C.4: "This increase of design limits does not apply to limits for bolted connections and shear stresses."

   As noted above, the increase in bolt allowable stress under emergency and faulted conditions is not permitted because: (1) the interaction between the allowable tension and shear stress in bolts is nonlinear, and (2) the allowable tension and shear stress vary with the bolt size. The NSSS supplier believes that the present ASME Code rules are adequate since they do satisfy the two objectives raised in the above quoted paragraph and hence will use the present rules without further restrictions or justification. This position is based on the following:

1. It is well recognized after extensive experimental work by several researchers that the interaction curve between the shear and tension stress in bolts is more closely represented by an ellipse and not a line. This has been clearly recognized by the ASME. Code Case 1644 has specified stress limits for bolts and represents this tension/shear relationship as a non-linear interaction equation (ellipse). This equation has since been added to the ASME Code Section III in the Winter '77 Addenda. This interaction equation has a built-in safety factor that ranges between 2 and 3 (depending on whether the bolt load is predominantly tension or shear) based on the actual strength of the bolt as determined by test (Ref: "Guide to Design Criteria for Bolted and Riveted Joints," Fisher and Struik, copyright 1974, John Wiley and Sons, p. 54).

   Study of three interaction curves of allowable tension and shear stress based on the ASME Code (emergency condition allowables per XVII - 2110 and faulted condition allowables per F-1370) and the ultimate tensile and shear strength of bolts (obtained from experimental work published by Chesson, Faustino, and Munse in "Proceedings of ASCE:" October 1975) indicates that there is adequate safety margin between the emergency and faulted condition allowables and failure of the bolts.

   From this study it is observed that:

   (a) For the emergency condition, the safety factor (ratio of ultimate strength to allowable stress) varies between a minimum of 1.63 and a maximum of 2.73 depending upon the actual tensile stress/shear stress (T/S) ratio on the bolt.

   (b) For the faulted condition, the safety factor varies between a minimum of 1.36 to a maximum of 2.29, again depending upon actual T/S ratio on the bolt.

   It is thus reasonable to allow an increase in these limits for the emergency and faulted conditions.

2. In Section III, Subsection NA, Table XVII - 2461.1, the ASME Code provides the criterion for allowable stress on bolts.

   According to this table, the allowable stress depends upon the bolt size as well as the bolt material.

3. The structures designed to meet AISC Manual of Steel Construction have been proven to be adequately designed. It is also recognized that the ASME Code requirements for Class 1 linear type supports (Appendix XVII) have been derived from AISC Manual of Steel Construction. In Paragraph 1.5.6 of Manual of Steel Construction, AISC permits the increased allowables for "occasional loads such as wind and seismic." In view of this, restrictions by NRC on not permitting increased allowables under emergency and faulted conditions which also are "infrequent incidents and limiting faults" are not justified.

Based on Paragraphs 1, 2, and 3 above, for the emergency and faulted conditions, the NSSS supplier will use allowable bolt stresses based upon the equations specified in Code Case 1644-4, as increased according to the provisions of XVII-2110(a) and F-1370(a) (as amended by Regulatory Guide 1.124 Paragraph C.4), respectively. The NSSS supplier will use the revision of Code Case 1644, as amended by Regulatory Guide 1.85, consistent with material procurement for the selection of material properties.

b. Paragraph C.4 of the Regulatory Guide states: "However, all increases (i.e., those allowed by NF-3231.1(a), XVII-2110(a), and F-1370(a)) should always be limited by XVII-2110(b) of Section III." Paragraph XVII-2110(b) specifies that member compressive axial loads shall be limited to $^{2}/_{3}$ of critical buckling. Satisfaction of this criteria for the faulted condition is met for the primary equipment supports.

c. Paragraph C.6(a) of the Regulatory Guide appears to erroneously allow the use of faulted stress limits for the emergency condition. The NSSS supplier will interpret this paragraph as follows: "The stress limits of XVII-2000 of Section III and Regulatory Position 3, increased according to the provisions of XVII-2100(a) of Section III, should not be exceeded for component supports designed by the linear elastic analysis method."

This position was accepted by the NRC via the RESAR 414 Safety Evaluation Report.

Regulatory Guide 1.125

(Rev. 1, 10/78) Physical Models for Design and Operation of Hydraulic Structures and Systems for Nuclear Power Plants

Seabrook does not have any safety-related hydraulic structures which directly interface with surface waters.

Some of the types of physical modeling studies included in Regulatory Guide 1.125, Rev. 1, were, however, used in the design and operation of nonsafety- related hydraulic structures and systems of the plant. A number of these studies were discussed with the NRC staff at the testing facilities. Results of these studies have been transmitted to the NRC staff.

The physical modeling studies are further discussed in Section 3.4 of the Environmental Report.

Regulatory Guide 1.126

(Rev. 1, 3/78) An Acceptable Model and Related Statistical Statistical Methods for the Analysis of Fuel Densification

The fuel densification model presented in Reference 11, which has been approved by the NRC, has been utilized. This model continues to be used with the updated fuel performance models in Reference 18. Results reported in Reference 19 (which has been approved by the NRC) show that the densification has been minimized in Westinghouse fuel through improvements in the fuel manufacturing process, and that formation of significant axial gaps in the fuel stack will not occur.

Regulatory Guide 1.127

(Rev. 1, 3/78) Inspection of Water-Control Structures Associated With Nuclear Power Plants

The recommendations of Regulatory Guide 1.127, Rev. 1, will be met by developing and implementing an appropriate in-service inspection and surveillance program for the flood protective structures. These flood protective structures consist of the stone revetments, reinforced concrete vertical seawall, and the sheet pile retaining wall.

Regulatory Guide 1.128

(Rev. 1, 10/78) Installation Design and Installation of Large Lead Storage Batteries for Nuclear Power Plants

The recommendations of Regulatory Guide 1.128 have been followed.

The subject matter of this guide is discussed in Subsection 8.3.2.

Regulatory Guide 1.129

(Rev. 1, 2/78) Maintenance, Testing and Replacement of Large Lead Storage Batteries for Nuclear Power Plants

The plant design conforms to Regulatory Guide 1.129 except for the following:

The Regulatory Guide states in Position C.1, "The battery service test... should be performed in addition to the battery performance discharge test." The Technical Specifications require service tests at least once per 18 months and performance discharge tests at least once per 60 months. However, the Technical Specifications allow the performance discharge test to be performed in lieu of (not in addition to) the service test once per 60 month interval.

The Regulatory Guide states in Position C.1, "The battery service test should be performed during refueling operations or at some other outage, with intervals between tests not to exceed 18 months."

The Technical Specifications permit the battery service test to be performed during non-outage periods. The Seabrook Station design incorporates two 100% capacity battery banks per train. Removing one of these battery banks from service for surveillance testing does not reduce the system capabilities. The regulatory guide assumes only one 100% capacity battery bank per train.

The subject matter of this regulatory guide is further discussed in Subsection 8.3.2.

Regulatory Guide 1.130

(Rev. 1, 10/78) Service Limits and Loading Combinations for Class 1 Plate-and-Shell-Type Component Supports

The Seabrook NSSS is in partial compliance with this regulatory guide, with the following exceptions:

a. The regulatory guide states in Paragraph B.l:

"Allowable design limits for bolted connections are derived on a different basis that varies with the size of the bolt. For this reason, the increases permitted by NF-3224 and F-1323.1(a) of Section III are not directly applicable to bolts and bolted connections."

This requirement is overly conservative. The ASME Code provides stress criteria for the design of bolting for component supports. Paragraph NF-3280 of ASME III specifies the use of the S_y values given in Table I-13.3 as multiplied by the applicable design factors of Table XVII-2461.1-1. Paragraph F-1323.1 specifies the use of the S_m values of Table I-1.3 (NB-3230) specifically for the faulted condition. In addition, Table 4 of Code Case 1644 presents alternative bolting design requirements which may be used.

In Table XVII-2461.1-1, Table I-1.3, and Table 4 of Code Case 1644, the allowable stress values (either Sy or S_m) are dependent upon the size of the bolt as well as bolt material. Thus, since bolt size is already taken into consideration in the formulation of these criteria, it is reasonable to allow an increase in these limits for emergency and faulted conditions. In addition, the bolting design rules presented in Code Case 1644 (starting with Revision 4) provide an acceptable basis for design of bolts and should, therefore, be clearly noted in the regulatory guide.

The NSSS supplier will use allowable bolt stresses specified in Table XVII-2461.1-1), Table I-1.3, and Code Case 1644 for emergency and faulted conditions as increased according to the provisions of NF-3224 and F-1323.1(a), respectively.

b. In Paragraphs C.3, C.4(a), and C.6(a) of the regulatory guide, design margins of 2 for flat plates and 3 for shells are unnecessarily restrictive for normal, upset, and emergency conditions, as well as inconsistent with ASME Code requirements. For these loading conditions, the NSSS supplier will limit the allowable buckling strength to of the critical buckling strength.

c. In Paragraph C.7 of the regulatory guide, inclusion of the upset plant condition is inappropriate in the load combination under discussion. The NSSS supplier will not include the upset plant condition in this combination.

d. In Paragraphs C.7(a) and B.1 of the regulatory guide, the stress limits of F-1370(c) are discussed. The criterion stated in F-1370(c),"...Loads should not exceed 0.67 times the critical buckling strength of the support..," is overly restrictive for the faulted condition. The most significant faulted condition loads on equipment supports result from seismic disturbances and postulated loss-of-coolant accidents, both of which are extremely short duration, dynamic events.

If it is shown that the dynamic effects of the member loading are not detrimental, the NSSS supplier will allow the compressive axial load to go to 0.9 times the critical buckling strength.

e. In Paragraph C.7(b) of the regulatory guide, the limit based on the test load given in the regulatory guide, T.L. x 0.7 S_u/S_u, is overly conservative and is inconsistent the ASME Code requirements.

The NSSS supplier will use the limit as calculated by T.L. x 0.8 S_u/S_u.

This position was accepted by the NRC via the RESAR 414 Safety Evaluation Report.

Regulatory Guide 1.131

(Rev. 0, 8/77) Qualification Tests of Electric Cables, Field Splices and Connections for Light- Water-Cooled Nuclear Power Plants

The qualification test recommendations of this guide have been followed.

The subject is further discussed in Subsections 8.1.5.3a and 8.3.1.4.

Regulatory Guide 1.132

(Rev. 1, 3/79) Site Investigation for Foundations of Nuclear Power Plants

The site investigations performed for the plant complied in part with Regulatory Guide 1.132, Rev. 1, which was issued subsequent to the performance of the site investigation. The investigation was more than adequate to determine the geotechnical characteristics of the site affecting the design, performance and safety of the plant. It was performed under the direction, and with the advice of, experienced personnel familiar with the site and regional geology. The main exception to compliance with the guide was in meeting the general guidelines for subsurface explorations. These explorations were carried out to adequately assess the foundation requirements based on the complexity of the anticipated subsurface conditions. This is further discussed in Subsection 2.5.1 and its associated appendices.

Regulatory Guide 1.133

(Rev. 1, 5/81) Loose-Part Detection Program for the Primary System of Light-Water-Cooled Reactors

Compliance with Regulatory Guide 1.133 is discussed in detail in Subsection 4.4.6.4.

Regulatory Guide 1.134

(Rev. 2, 4/87) Medical Evaluation of Licensed Personnel for Nuclear Power Plants

Endorses ANSI/ANS-3.4-1983.

The medical evaluation of licensed operators complies with the requirements of Regulatory Guide 1.134, Rev. 2. For further discussion, refer to Seabrook Station's Medical Manual. The use of licensed/certified nurse practitioners to perform the hands-on physical examination with an evaluation and sign-off by a licensed physician who makes the final determination per Regulatory Guide 1.134 is documented in References 16 and 17.

Regulatory Guide 1.135

(Rev. 0, 9/77) Normal Water Level and Discharge at Nuclear Power Plants

The structural design criteria for normal ground and surface water levels comply with Regulatory Guide 1.135 by establishing the maximum ground and surface water levels at safety-related structures and facilities at +20 feet MSL (plant grade). Elevation +20 feet MSL is above both the maximum recorded ground water level and also above the postulated probable maximum surge still water level.

Wave runup and overtopping of the protective revetment would occur during the probable maximum surge which would cause ponding on the site of approximately 0.6 feet. All safety-related structures are protected against this site ponding level.

For further discussion, refer to Section 2.4.

Regulatory Guide 1.136

(Rev. 2, 6/81) Materials, Construction, and Testing of Concrete Containments

The requirements of this guide comply with the following exceptions:

a. Paragraph B.8, CC-4333.4.2 - Splice Samples

This section requires only a production-splice testing program. Sister splices have also been used.

Sister splices were taken in place of production Cadwelding splices in congested areas or in areas where conditions would be detrimental for providing satisfactory replacement splices.

Where a total sister splice test program was implemented for a series of splices, the testing frequency was in accordance with ASME Section III, Division 2, 1975, CC-4333.4.3(b) and USNRC Regulatory Guide 1.10, Paragraph 4(b), except that all splices were sister splices. Tensile testing was performed on a random selection basis using the testing frequency in either Paragraph (a) or (b) of ASME Section III, Division 2, 1975, CC-4333.4.3. At least one quarter of the total number of splices tested from the containment structure (ASME boundary-exterior mat, shell and dome) were production splices. At least one quarter of the total number of splices tested from all other combined safety related splicing were also production splices.

Prior to forming, all Cadweld splices were inspected to assure that all preparations (e.g., cleaning, drying, aligning) required by the designer and the splice manufacturer were properly carried out. Quality Assurance personnel inspected a minimum of one splice connection per crew per shift, and all other splice connections were inspected by Cadwelding personnel.

b. Paragraph B.9, CC-4352 - Splices

The requirement for staggering mechanical (Cadweld) reinforcing bar splices, as revised in the 1980 issue of ACI-349, has generally been complied with. In the limited number of cases where splices were not staggered, proper technical evaluation was performed to justify the nonstaggered arrangement.

c. Paragraph C.12, CC-5210 - General

All pipes used for rebar supports have not been filled with grout.

Regulatory Guide 1.137

(Rev. 1, 10/79) Fuel Oil Systems for Standby Diesel Generators

The fuel oil system design for the standby diesel generators complies with the requirements of NRC Regulatory Guide 1.137, Rev. 1. Fuel oil testing exceptions are identified in Subsection 9.5.4.4.

For further discussion, refer to Subsection 9.5.4.

Regulatory Guide 1.138

(Rev. 0, 4/78) Laboratory Investigations of Soils for Engineering Analysis and Design of Nuclear Power Plants

The laboratory investigations of soils for engineering analysis and design complied in part with Regulatory Guide 1.138, Rev. 0, dated April, 1978, which was issued subsequent to the performance of the laboratory investigations. The investigations were more than adequate to permit a realistic evaluation of soil and rock properties and subsurface conditions. They were performed under the direction of experienced engineers and geologists who have demonstrated competence in the field of soil and rock mechanics testing and are familiar with the site.

Table 1.8-1 includes the actual testing procedures used in the investigations and identifies the procedures preferred by the NRC, as given in Regulatory Guide 1.138. Table 1.8-1 also notes exceptions taken to the preferred procedures. These exceptions were to make the test results more reliable or applicable to a wider range of soil types. The noted exceptions do not alter the engineering application of the test results.

This subject is further discussed in Subsection 2.5.1.

Regulatory Guide 1.139

(Rev. 0, 5/78) Guidance for Residual Heat Removal

Regulatory Guide 1.139 establishes specific design requirements that address the various system functions that are required to achieve and maintain a safe hot standby and cold shutdown condition.

The NSSS supplier endorses the design objective of Regulatory Guide 1.139 to ensure systems capability for achieving and maintaining the plant in a safe shutdown condition. The NSSS supplier has implemented for Seabrook this design objective by providing systems with the capability to place and maintain the plant in a safe hot standby condition. Suitable design provisions and interface requirements have been provided to permit the plant to be maintained in the safe hot standby condition until (a) normal systems could be restored to permit either return to power operation or cooldown to cold shutdown conditions, or (b) sufficient systems capability could be restored (depending on plant condition) to permit cooldown to cold shutdown conditions under abnormal plant conditions. This design philosophy, when properly implemented, is considered to constitute a safe design, independent of the time period at which the plant is maintained at hot standby or cooled to cold shutdown conditions.

The NSSS supplier's safe shutdown design does not comply in full with the specific design requirements of Regulatory Guide 1.139. However, this traditional safe shutdown design incorporates an inherent level of cold shut-down capability under accident conditions which compares favorably with the specific requirements of Regulatory Guide 1.139 (when reviewed on a case-by-case basis). For this category of plants, the case-by-case implementation requirements of Regulatory Guide 1.139 are considered an endorsement of the traditional NSSS supplier's safe shutdown design basis. For a plant in this category, evaluation of the plant specific safe shutdown design basis against the requirements of Regulatory Guide 1.139 ensures that the system functions that are required to achieve and maintain a safe hot standby and cold shut-down have been properly implemented. A major benefit of such an evaluation is the identification of plant specific equipment and the development of plant specific operating procedures for bringing the plant to cold shutdown under abnormal conditions, including natural circulation. The specific design requirements of Regulatory Guide 1.139 function as a bench mark for this evaluation and identify areas for potential upgrading based on value/impact assessment. Selective upgrading may be beneficial in providing increased operating flexibility and increased margins of safety under abnormal plant conditions.

For plants which must comply with Regulatory Guide 1.139 on a case-by-case basis, the following compliance exemption is identified:

The systems for bringing the plant from normal operating conditions to cold shutdown should not be required to achieve cold shutdown conditions within 36 hours if it can be demonstrated that the plant can be maintained for longer periods of time in a safe hot standby or hot shutdown condition with adequate heat removal via the Auxiliary Feedwater System or Residual Heat Removal System, respectively.

The portions of BOP systems that are utilized to achieve and maintain a safe hot standby, or take the plant from hot standby to the condition where the RHR system can be cut in, are designed and fabricated to safety Class standards, and are provided with appropriate redundancy and remote operability to meet the requirements of this Regulatory Guide.

These systems and components are described in detail in Section 10.3, "Main Steam System," and in Section 6.8, "Emergency Feedwater System."

With regard to plant cooldown capability, either emergency feedwater pump is designed in conjunction with all four atmospheric relief valves to be able to maintain hot standby for 4 hours followed by a cooldown period of 5-hour duration. The condensate storage tank (Subsection 9.2.6.3) has sufficient capacity to support the above.

For situations where all four atmospheric relief valves are not available, there exists sufficient time for the operators to take corrective action.

This corrective action could be the re-establishment of all four atmospheric relief valves to operable, or the line-up of additional water supplies such as water treatment, demineralized water storage tank or fire protection to supplement the condensate storage tank in a prolonged cooldown.

Regulatory Guide 1.140

(Rev. 1, 10/79) Design, Testing and Maintenance Criteria for Normal Ventilation Exhaust System Air Filtration and Adsorption Units of Light Water-Cooled Nuclear Power Plants

The requirements of this guide have been met, with the exceptions discussed in Subsection 9.4, Table 9.4-20, Table 9.4-21, Table 9.4-22, Table 9.4-23.

Section C.5.c requires HEPA filter banks, located upstream of the adsorber section, and Section C.5.d.(4) requires activated carbon adsorbers to be tested following painting, fire, or chemical release in any ventilation zone communicating with the system in such a manner that the HEPA filter or the charcoal adsorbers could become adversely affected by the fumes, chemicals, or foreign material. Painting is administratively controlled to protect the HEPA filters and the charcoal adsorbers from the adverse effects of the fumes.

Regulatory Guide 1.141

(Rev. 0, 4/78) Containment Isolation Provisions for Fluid Systems

The recommendations of Regulatory Guide 1.141 have been followed with the exceptions listed in Subsection 6.2.4.2m.

For further discussion, refer to Subsection 6.2.4 and 7.1.2.2a.

Regulatory Guide 1.142

(Rev. 1, 10/81) Safety-Related Concrete Structures for Nuclear Power Plants (Other Than Reactor Vessels and Containments)

According to the "Implementation" section of this guide, compliance by Seabrook Station to this guide is not required.

ACI-349-76, "Code Requirements for Safety Related Structures," however, was not directly used as a design and construction standard, although the design and construction of the structures do fulfill the intent of the requirements set forth in the publication and in this regulatory guide. By the time this regulatory guide was issued, much of the design and fabrication were completed, and construction was also in progress. Consequently, the work was based on appropriate, corresponding standards, as follows:

a. Loads and load combinations were taken directly from the USNRC Standard Review Plan and ACI-318.

b. Structural analysis and design were consistent with the requirements of the Standard Review Plan and ACI-318.

c. Acceptance criteria were taken directly from the Standard Review Plan and ACI-318.

d. The requirement for staggering mechanical (Cadweld) reinforcing bar splices, as revised in the 1980 issue of ACI-349, has generally been complied with. In the limited number of cases where splices were not staggered, proper technical evaluation was performed to justify the nonstaggered arrangement.

Thus, through the use of the above described, judiciously selected standards, the safety-related structures were designed, fabricated and erected in a manner that ensures that they will withstand the effects of postulated accidents and environmental conditions, as well as those effects associated with normal operating conditions.

Additional information can be found in the appropriate subsections of Section 3.8.

Regulatory Guide 1.143

(Rev. 1, 10/79) Design Guidance for Radioactive Waste Management Systems, Structures and Components Installed in Light-Water-Cooled Nuclear Power Plants

The recommendations of Regulatory Guide 1.143 have been followed. The following installed plant components are exceptions to the recommendations of Regulatory Guide 1.143:

- Chemical Drain Tank
- Chemical Drain Treatment Tanks

These three tanks are made of plastic and fiberglass and are designed to Standard PS-16-69.

None of the tanks contain a high inventory of radioactive material. For further discussion, refer to Subsection 9.3.3.

A vendor supplied waste liquid processing system is a supplement to the station installed waste liquid (WL) system. The vendor equipment meets the intent of Regulatory Guide 1.143 and of ANSI/ANS 40.37 (1993). The vendor system may have the following components, which are exceptions to the language on Regulatory Guide 1.143, ". . .plastic pipe should not be used.":

- PVC filter housing
- Rubber Hoses for flexible connection to plant system
- Glass fiber reinforced ultra-filtration unit housing

These components are nonmetallic to minimize the effect of system concentrates and cleaning chemicals, and to enhance the ability to install and remove the components for replacement. They are designed to meet the vendor system temperature, pressures and flows, and are tested to the recommendations in ANSI/ANS 40.37.

The steam generator blowdown recovery acid and caustic piping and equipment that supply the resin beds and the acid/caustic drains which connect directly to the waste hold up sump, including the piping and equipment that supplies demineralized water for dilution of the chemical, are considered a maintenance sub-system for the re-generation of the resins inside the demineralizer beds. This equipment is not part of the blowdown pressure boundary used for the treatment of effluent from the steam generators. During the re-generation process, the chemical sub-system is isolated from the inservice steam generator blowdown flow path. The piping and equipment that supply chemicals to the resin beds do not contain, or are not subject to the ingestion of radioactive materials. Therefore, the recommendation of Regulatory Guide 1.143 does not apply.

Initial in-service leakage testing and inspection per ANSI B31.1-1977 and Seabrook Master Integrity Test procedure is an alternative to hydrostatic testing per RG 1.143 rev. 01 dated 10/79 for 1-SB-V-1008, associated 1" piping, and the half coupling and welds.

Regulatory Guide 1.145

(Rev. 0, 8/79) Atmospheric Dispersion Models for Potential Accident Consequence Assessments at Nuclear Power Plants

The atmospheric dispersion model used to compute potential accident consequence assessments is described in Subsection 2.3.4. The modeling methodology complies with the intent of Regulatory Guide 1.145.

Regulatory Guide 1.147

(Rev. 2, 6/83) Inservice Inspection Code Case Acceptability ASME Section XI, Division I

This Regulatory Guide is subject to periodic review and revision, and code cases referenced therein are subject to change. Code cases allowed by this Regulatory Guide and applicable to Seabrook will be referenced in the applicable Plant Section XI Program.

Regulatory Guide 1.148

(Rev. 0, 3/81) Functional Specification for Active Valve Assemblies in Systems Important to Safety in Nuclear Power Plants

Regulatory Guide 1.148 is not applicable to Seabrook Station, with the exception of new systems important to safety and replacement valve units ordered after July 1, 1981. New systems important to safety and replacement valve units ordered after July 1, 1981 will be in compliance with Regulatory Guide 1.148.

Regulatory Guide 1.149

(Rev. 4, 4/2011) Nuclear Power Plant Simulation Facilities for Use in Operator Training, License Examinations, and Applicant Experience Requirements

Endorses ANSI/ANS 3.5-2009

Revision 4 of this Regulatory Guide endorses the 2009 version of ANSI/ANS 3.5 with clarifications. Seabrook internal instructions for simulator software configuration control and testing have been revised to reflect the guidelines of the 2009 edition of ANSI/ANS 3.5.

Regulatory Guide 1.150

(Rev. 1, 2/83) Ultrasonic Testing of Reactor Vessel Welds During Pre-Service and Inservice Examinations

FPLE Seabrook implemented Regulatory Guide 1.150, Rev. 1 at the Seabrook site for the pre-service and in-service inspection of the reactor vessels. Specific plans for the implementation of Regulatory Guide 1.150 are contained in the Pre-Service Program Plan and were developed in a similar manner for the In-Service Inspection Programs.

Regulatory Guide 1.151

(Rev. 0, 7/83) Instrument Sensing Lines

The recommendations of Regulatory Guide 1.151 have been followed, with the exceptions as discussed in Subsections 3.2.2.2 and .1.2.12.

Regulatory Guide 1.152

(Rev. 1, 1/96) Criteria for Programmable Digital Computer System Software in Safety-Related Systems of Nuclear Power Plants

This Regulatory Guide endorses ANSI/IEEE-ANS 7-4.3.2-1993 for general guidance on stage-by-stage testing, overall performance assurance, and documentation of software for programmable digital computer systems in safety-related systems of nuclear power plants. The recommendations of Regulatory Guide 1.152 have been followed for upgrade of programmable digital computer systems used in the safety-related control room air conditioning system and the diesel generator temperature control system application at the Seabrook site. Refer to FSAR Subsection 9.4.1.1 and 9.5.5, respectively.

Regulatory Guide 1.153

(Rev. 0, 6/96) Criteria for Power, Instrumentation and Control Portions of Safety Systems

This Regulatory Guide endorses the guidance provided in IEEE Standard 603-1991 with appropriate supplements for the design, reliability, qualification, and testability of the power instrumentation and control portions of safety-related systems. IEEE Standard 603-1991 provides the same criteria as IEEE-279-1971 for protection systems, but is expanded in scope to provide additional guidance by including criteria for protection system actuation functions and auxiliary systems including digital systems.

The recommendations of Regulatory Guide 1.153 and Guidance provided in IEEE-603-1991 have been followed for upgrade of the digital computer systems used in the safety-related control room air conditioning system application at Seabrook Station.

Regulatory Guide 1.155

(Rev. 0, 6/88) Station Blackout

The requirements of Regulatory Guide 1.155 have been met as described in UFSAR Section 8.4. As allowed by Regulatory Guide 1.155, Section B, the guidelines of NUMARC 87-00, "Guidelines and Technical Bases for NUMARC Initiatives Addressing Station Blackout at Light Water Reactors" were followed except where the Regulatory Guide took precedence.

Regulatory Guide 1.157

(Rev. 0, 5/89) Best Estimate Calculations of Emergency Core Cooling System Performance

This guide provides guidance for the use of best estimate codes for use in ECCS evaluation models. The Large Break LOCA analysis was performed using the Westinghouse Best Estimate Large Break LOCA Methodology and is discussed in Chapter 15.6.5.2.

Regulatory Guide 1.163

(Rev. 0, 9/95) Performance-Based Containment Leak-Test Program

The requirements of Regulatory Guide 1.163 have been incorporated into UFSAR Subsection 6.2.6. The Regulatory Guide is listed in Subsection 3.8.2. As allowed by Regulatory Guide 1.163, the guidelines of NEI 94-01, dated July 26, 1995, "Industry Guideline for Implementing Performance-Based Option of 10 CFR Part 50 Appendix J" were followed except where Regulatory Guide 1.163 took precedence.

Regulatory Guide 1.183

(Rev. 0 7/00) Alternative Radiological Source Terms for Evaluating Design Basis Accidents at Nuclear Power Reactors

The requirements of Regulatory Guide 1.183 have been incorporated into UFSAR Chapter 15. Regulatory Guide 1.183 is referenced in subsections 15.1.5.3, 15.3.3.3, 15.4.8.3, 15.6.2.3, 15.6.3.3, 15.6.5.4, 15.7.1.3, 15.7.2.3, 15.7.4.3, and Appendix 15C.

Regulatory Guide 1.190

(Rev. 0, 3/01) Calculational and Dosimetry Methods for Determining Pressure Vessel Neutron Fluence

The methods and assumptions described in this guide are for the calculation and measurement of vessel fluence for core and vessel geometrical and material configurations that are typical of current light water reactor designs. The methodology presented is intended as a best estimate, rather than a bounding or conservative fluence determination.

The determination of the pressure vessel fluence is based on both calculations and measurements; the fluence predication is made with a calculation, and the measurements are used to qualify the calculational methodology. Because of the importance and the difficulty of these calculations, the methods must be qualified by comparison to measurements to ensure a reliable and accurate vessel fluence determination.

Regulatory Guide 1.196

(Rev. 1, 1/07) Control Room Habitability at Light-Water Nuclear Power Reactors

The requirements of Regulatory Guide 1.196 have been incorporated into the Control Room Envelope Habitability Program which is referenced in UFSAR Chapters 2, 6 and 9. This reference is in subsections 2.2, 6.4.2.2, 6.4.4.2, 6.4.5, 6.5.1.3, 6.5.1.4, 9.4.1.3 and 9.4.1.4.

This regulatory guide provides guidance for implementing the NRC's regulations in Appendix A, "General Design Criteria for Nuclear Power Plants," to Title 10, Part 50, of the *Code of Federal Regulations* (10 CFR Part 50), "Domestic Licensing of Production and Utilization Facilities," as they relate to control room habitability (CRH).

Regulatory Guide 1.196 did not endorse the method of equating a breach size to an inleakage flow rate. Seabrook does use a breach control method that equates breach size to the CREMAFS design filtered pressurization airflow rate and differential pressure limit. This method does not equate breach sizes to or result in any increase in inleakage flow rate. Therefore, the CRE Habitability Program being implemented by License Amendment 119 utilizes this breach control method in addition to the method described in Regulatory Guide 1.196.

Regulatory Guide 1.197

(Rev. 0, 11/03) Demonstrating Control Room Envelope Integrity at Nuclear Power Reactors

The requirements of Regulatory Guide 1.197 have been incorporated into the Control Room Envelope Habitability Program which is referenced in UFSAR Chapters 2, 6 and 9. This reference is in subsections 2.2, 6.4.2.2, 6.4.4.2, 6.4.5, 6.5.1.3, 6.5.1.4, 9.4.1.3 and 9.4.1.4.

This regulatory guide provides guidance for configuration control of the CRE boundary, preventative maintenance of the CRE boundary and assessment of the CRE habitability at NRC-accepted frequencies to ensure that the significant degradation of the boundary will not go undetected between CRE inleakage determinations. Seabrook Station does not take any exceptions to Regulatory Guide 1.197.

REFERENCES

1. "Reactor Coolant Pump Integrity in LOCA," WCAP-8163, September 1973.

2. Deleted

3. YAEC-1241, "Thermal-Hydraulic Analysis of PWR Fuel Elements Using the CHIC_KIN code", R. E. Helfrich, March 1981.

4. Enrietto, J. F., "Control of Delta Ferrite in Austenitic Stainless Steel Weldments," WCAP-8324-A, June 1975.

5. Enrietto, J. F., "Delta Ferrite in Production Austenitic Stainless Steel Weldments," WCAP-8693, January 1976.

6. Caplan, J. S., "The Application of Preheat Temperatures after Welding Pressure Vessel Steels," WCAP-8577, February 1976.

7. "Damping Values of Nuclear Power Plant Components," WCAP-7921-AR, May 1974.

8. YAEC-1752A, "STAR Methodology Application for PWRs, Control Rod Ejection, Main Steam Line Break" Volumes 1 and 2, N. Fujita et al., September/October 1990.

9. Jordan, W. G., Lorentz, D. G. and Miller, R. B., "Methodology for Qualifying Westinghouse PWRSD Supplied NSSS Safety-Related Electrical Equipment," WCAP-8587, Revison 6, November 1983.

10. Letter NS-CE-784, dated September 22, 1975, C. Eicheldinger (Westinghouse) to the Secretary of the Nuclear Regulatory Commission.

11. Weiner, R.A., et al., "Improved Fuel Performance Models for Westinghouse Fuel Rod Design and Safety Evaluations," WCAP-10851-P-A (Proprietary) and WCAP-11873-A (Non-Proprietary), August 1988.

12. United Engineers & Constructors Inc., Specification 9763-WS-4C, "Requirements for Mechanical Splicing and Nondestructive Examination of the Reinforcing Bars Supplied by the Cadweld Method," January 8, 1975.

13. Nyquist, R., W. Durgin and G. Hecker, "Hydrothermal Studies of Bifurcated Diffuser Nozzles and Thermal Backwashing, Seabrook Station," Alden Research Laboratories Report No. 101-77, Holden, Mass., 1977.

14. Brocard, D. and J. Kirby, Jr., "Farfield Model for Waste Heat Discharge in the Coastal Zone," Proceedings of the Second Conference on Waste Heat Management and Utilization, Miami, Florida, 1978.

15. "Environmental Qualification of Electrical Equipment Important to Safety," Revison 2, (later).

16. Letter SBN-647, T.F.B.7.1.2, dated February 28, 1984, J. DeVincentis (PSNH) to D. Beckham, Operator Licensing Branch of the Nuclear Regulatory Commission, "Physical Examination for License Eligibility."

17. Letter, dated April 18, 1984, D. Beckham, Operator Licensing Branch of the Nuclear Regulatory Commission to J. DeVincentis (PSNH), "Response to February 28, 1984 letter."

18. Slagle, W.H., (Ed.), "Westinghouse Improved Performance Analysis and Design Model (PAD 4.0)," WCAP-15063-P-A, Rev. 1 w/errata, July 2000.

19. Oelrich, R.L., and Kersting, P.J., "Assessment of Clad Flattening and Densification Power Spike Factor Elimination in Westinghouse Nuclear Fuel," WCAP-13589-A, March 1995.

1.9 COMPLIANCE WITH NUREG-0737: CLARIFICATION OF TMI ACTION PLAN REQUIREMENTS

1.9.1 Compliance with Requirements

On October 31, 1980, D. G. Eisenhut, Director, Division of Licensing, Office of Nuclear Reactor Regulation, issued a letter to "All Licensees of Operating Plants and Applicants for Operating Licenses and Holders of Construction Permits" addressing Post TMI Requirements (NUREG-0737). Enclosure 2 to this document identified TMI Action Plan Requirements for Applicants for an Operating License approved for implementation by the Commission at the time of issuance.

This section addresses Seabrook Station's compliance with the positions of applicable NUREG-0737 and NUREG-0737, Supplement 1 (Generic Letter 82-33) Requirements. For each requirement, the NRC staff position, a brief summary of NHY's method for compliance and/or the appropriate Updated FSAR reference(s) where compliance is addressed are presented. It should be noted, that the responses to the various tasks below, address the NRC staff's position as well as clarifications provided in NUREG-0737, even though the clarifications were not specifically stated in the staff position quoted.

Task I.A.1.1 Shift Technical Advisor (NUREG-0737)

Position:

Each licensee shall provide an on-shift technical advisor to the shift supervisor. The Shift Technical Advisor (STA) may serve more than one unit, at a multi-unit site, if qualified to perform the advisory function for the various units.

The STA shall have a bachelor's degree, or equivalent, in a scientific or engineering discipline and have received specific training in the response and analysis of the plant for transients and accidents. The STA shall also receive training in plant design and layout, including the capabilities of instrumentation and controls in the control room. The licensee shall assign normal duties to the STAs that pertain to the engineering aspects of assuring safe operations of the plant, including the review and evaluation of operating experience.

Response:

See Updated FSAR Subsection 13.2.1.2.

Task I.A.1.2 Shift Supervisor Administrative Duties (NUREG-0660)

Position:

The objective is to increase the shift supervisor's attention to his command function by minimizing ancillary responsibilities. NRR has required that all operating plant licensees review the administrative duties of the shift supervisor. The review should be performed by the senior officer at each utility who is responsible for plant operations. Administrative functions that detract from, or are subordinate to, the management responsibility for assuring the safe operation of the plant are to be delegated to other operations personnel not on duty in the control room. The same requirement will be imposed by the licensing review staff on all operating license applicants.

Response:

See Updated FSAR Subsection 13.5.1.

Task I.A.1.3 Shift Manning (NUREG-0737)

Position:

This position defines shift manning requirements for normal operation. The letter of July 31, 1980 from D. G. Eisenhut to all power reactor licensees and applicants sets forth the interim criteria for shift staffing (to be effective pending general criteria that will be the subject of future rulemaking). Overtime restrictions were also included in July 31, 1980 letter.

Response:

See Updated FSAR Subsection 13.5.1.

Task I.A.2.1 Immediate Upgrading of Reactor Operator and Senior Reactor Operator Training and Qualifications (NUREG-0737)

Position:

Effective December 1, 1980, an applicant for a senior reactor operator (SRO) license will be required to have been a licensed operator for 1 year.

Response:

A retraining and replacement licensed training program for the Station Staff shall be maintained under the direction of the Training Manager in accordance with the Seabrook Station's INPO Accredited Programs. NUREG-1021 Examiner Standards, ES-202, Eligibility Requirements for Reactor Operator or Senior Reactor Operator Candidates at Power Reactors, will also be used. ES-202 provides alternative equivalence guidelines.

In addition, see Updated FSAR Subsection 13.2.1.

Task I.A.2.3 Administration of Training Programs (NUREG-0737)

Position:

Pending accreditation of training institutions, licensees and applicants for operating licenses will assure that training center and facility instructors who teach systems, integrated responses, transient, and simulator courses demonstrate senior reactor operator qualifications and be enrolled in appropriate requalification programs.

Response:

See Updated FSAR Subsection 13.2.1.

Task I.A.3.1 Revise Scope and Criteria for Licensing Examinations - Simulator Exams (Item 3) (NUREG-0737)

Position:

Simulator examinations are included as part of the licensing examinations.

Response:

See Updated FSAR Subsection 13.2.1.

Task I.B.1.2 Independent Safety Engineering Group (NUREG-0737)

Position:

Each applicant for an operating license shall establish an onsite Independent Safety Engineering Group (ISEG) to perform independent reviews of plant operations.

The principal function of the ISEG is to examine plant operating characteristics, NRC issuances, Licensing Information Service advisories, and other appropriate sources of plant design and operating experience information that may indicate areas for improving plant safety. The ISEG is to perform independent review and audits of plant activities including maintenance, modifications, operational problems, and operational analysis, and aid in the establishment of programmatic requirements for plant activities. Where useful improvements can be achieved, it is expected that this group will develop and present detailed recommendations to corporate management for such things as revised or equipment modifications.

Another function of the ISEG is to maintain surveillance of plant operations and maintenance activities to provide independent verification that these activities are performed correctly and that human errors are reduced as far as practicable. ISEG will then be in a position to advise utility management on the overall quality and safety of operations. ISEG need not perform detailed audits of plant operations and shall not be responsible for sign-off functions such that it becomes involved in the operating organization.

Response:

FPLE Seabrook ensures that the reviews addressed in Task I.B.1.2 are performed as required. See FPL Quality Assurance Topical Report for details.

Task I.C.1 Guidance for the Evaluation & Development of Procedures for Transients and Accidents (NUREG-0737)

Position:

In letters of September 13 and 27, October 10 and 30, and November 9, 1979, the Office of Nuclear Reactor Regulation required licensees of operating plants, applicants for operating licenses, and licensees of plants under construction to perform analyses of transients and accidents, prepare emergency procedure guidelines, upgrade emergency procedures (including procedures for operating with natural circulation conditions), and to conduct operator retraining (see also Item I.A.2.1). Emergency procedures are required to be consistent with the actions necessary to cope with the transients and accidents analyzed. Analyses of transients and accidents were to be completed in early 1980 and implementation of procedures and retraining were to be completed 3 months after emergency procedure guidelines were established; however, some difficulty in completing these requirements has been experienced. Clarification of the scope of the task and appropriate schedule revisions are being developed. In the course of review of these matters on Babcock & Wilcox (B&W) designed plants, the staff will follow up the bulletin and orders matters relating to analysis methods and results, as listed in NUREG-0660, Appendix C (see Table C.1, Items, 3, 4, 16, 18, 24, 25, 26, 27; Table C.2, Items 4, 12, 17, 18, 19, 20; and Table C.3; Items 6, 35, 37, 38, 39, 41, 47, 55, 57).

Response:

Emergency operating procedures define the actions required by station personnel during emergency conditions. Licensed operators will be thoroughly familiar with these procedures. Any “immediate actions” steps that licensed operators are required to memorize are specifically identified in that procedure.

The Emergency Operating Procedures use the Westinghouse Owners Group derived set of guidelines as their basis. These generic guidelines, which consist of Emergency Recovery Guidelines, are modified and adapted to the specific conditions and hardware that exist at Seabrook Station and are reviewed and approved by appropriate station supervisory and management personnel and are in accordance with Section 6.7 of the Technical Specifications and Updated FSAR Subsection 13.4.1.

The human factors review of the control room used these Emergency Operating procedures as input criteria for that study.

Task I.C.2 Shift and Relief Turnover Procedures (NUREG-0660)

Position:

Licensees are to review plant procedures for shift and relief turnover to ensure that each on-coming shift is made aware of critical plant status information and system availability.

Response:

See Updated FSAR Subsection 13.5.1.

Task I.C.3 Shift Supervision Responsibilities (NUREG-0660)

Position:

Licensees are to review plant procedures to assure that duties, responsibilities and authority of the shift supervisor and control room operators are properly defined.

Response:

See Updated FSAR Subsection 13.5.1.

Task I.C.4 Control Room Access (NUREG-0660)

Position:

Licensees are to review procedures that establish the authority and responsibility of the person in charge of access, and that establish a clear line of authority and responsibility in the control room in the event of an emergency.

Response:

See Updated FSAR Subsection 13.5.1.

Task I.C.5 Procedures for Feedback of Operating Experience to Plant Staff (NUREG-0737)

Position:

In accordance with Task Action Plan I.C.5, Procedures for Feedback of Operating Experience to Plant Staff (NUREG-0660), each applicant for an operating license shall prepare procedures to assure that operating information pertinent to plant safety originating both within and outside the utility organization is continually supplied to operators and other personnel and is incorporated into training and retraining programs. These procedures shall:

(1) Clearly identify organizational responsibilities for review of operating experience, the feedback of pertinent information to operators and other personnel, and the incorporation of such information into training and retraining programs;

(2) Identify the administrative and technical review steps necessary in translating recommendations by the operating experience assessment group into plant actions (e.g., changes to procedures, operating orders);

(3) Identify the recipients of various categories of information from operating experience (i.e., supervisory personnel, shift technical advisors, operators, maintenance personnel, health physics technicians), or otherwise provide means through which such information can be readily related to the job functions of the recipients;

(4) Provide means to assure that affected personnel become aware of and understand information of sufficient importance that should not wait for emphasis through routine training and retraining programs;

(5) Assure that plant personnel do not routinely receive extraneous and unimportant information on operating experience in such volume that it would obscure priority information or otherwise detract from overall job performance and proficiency;

(6) Provide suitable checks to assure that conflicting or contradictory information is not conveyed to operators and other personnel until resolution is reached; and,

(7) Provide periodic internal audit to assure that the feedback program functions effectively at all levels.

Response:

See Updated FSAR Subsection 13.5.1.

Task I.C.6 Guidance on Procedures for Verifying Correct Performance of Operating Activities (NUREG-0737)

Position:

It is required (from NUREG-0660) that licensees' procedures be reviewed and revised, as necessary, to assure that an effective system of verifying the correct performance of operating activities is provided as a means of reducing human errors and improving the quality of normal operations. This will reduce the frequency of occurrence of situations that could result in, or contribute to, accidents. Such a verification system may include automatic system status monitoring, human verification of operations and maintenance activities independent of the people performing the activity (see NUREG-0585, Recommendation 5), or both.

Implementation of automatic monitoring, if required, will reduce the extent of human verification of operations and maintenance activities, but will not eliminate the need for such verification in all instances. The procedures adopted by the licensees may consist of two phases; one before and one after installation of automatic status monitoring equipment, if required, in accordance with Item I.D.3.

Response:

See Updated FSAR Subsection 13.5.1.

Task I.C.7 NSSS Vendor Review of Procedures (NUREG-0660)

Position:

Operating license applicants are required to obtain reactor vendor review of their low-power, power-ascension, and emergency procedures as a further verification of the adequacy of the procedures.

Response:

Applicable procedures were submitted to Westinghouse for its review after the procedures were approved by the Station Operation Review Committee (SORC). For additional information, see Updated FSAR Section 14.2 and Table 14.2-1.

Task I.C.8 Pilot Monitoring of Selected Emergency Procedures for Near Term Operating License Applicants (NUREG-0660)

Position:

Licensees will be required to correct any deficiencies identified before full power operation.

Response:

Information has been provided to the NRC in Letter SBN-358 (dated November 8, 1982).

Task I.D.1 Control Room Design Reviews (NUREG-0737)

Position:

In accordance with Task Action Plan I.D.1, Control Room Design Reviews (NUREG-0660), all licensees and applicants for operating licenses will be required to conduct a Detailed Control Room Design Review (DCRDR) to identify and correct design deficiencies. This Detailed Control Room Design Review is expected to take about a year. Therefore, the Office of Nuclear Reactor Regulation (NRR) requires that those applicants for operating licenses who are unable to complete this review prior to issuance of a license make preliminary assessments of their control rooms to identify significant human factors and instrumentation problems and establish a schedule approved by NRC for correcting deficiencies. These applicants will be required to complete the more Detailed Control Room Reviews on the same schedule as licensees with operating plants.

Response:

DCRDR information has been submitted to the NRC in the following letters:

- SBN-274 (5/12/82)
- SBN-499 (4/14/83)
- SBN-530 (7/7/83)
- SBN-544 (8/10/83)
- SBN-701 (7/30/84)

- SBN-748 ((1/7/85)
- SBN-839 (7/17/85)
- SBN-914 (12/27/85)
- SBN-948 (2/20/86)

Task I.D.2 Plant Safety Parameter Display Console (NUREG-0737)

Position:

In accordance with Task Action Plan I.D.2, Plant Safety Parameter Display Console (NUREG-0660), each applicant and licensee shall install a Safety Parameter Display System (SPDS) that will display to operating personnel a minimum set of parameters which define the safety status of the plant. This can be attained through continuous indication of direct and derived variables as necessary to access plant safety status.

Response:

A description of the "Safety Parameter Display System" was submitted to the NRC via letter SBN-920 (dated January 6, 1986). Additional information was provided in the following letters:

- SBN-499 (4/14/83)
- SBN-987 (4/2/86)
- NYN-87026 (3/6/87)
- NYN-87049 (4/9/87)

Task I.G.1 Training Requirements (NUREG-0660)

Position:

Licensees will (1) define training prior to loading fuel and (2) conduct training prior to full power operation.

Response:

A set of low power tests to be performed was identified three month's prior to fuel load. However, since Seabrook has a site specific simulator which is maintained current with Unit 1 design as per ANSI/ANS 3.5-1979, each operating crew performed the designated low power tests on the simulator. Therefore, only the crew on shift performed the low power testing on the actual plant.

Task II.B.1 Reactor Coolant System Vents (NUREG-0737)

Position:

Each applicant and licensee shall install Reactor Coolant System (RCS) and reactor vessel head high point vents, remotely operated from the control room. Although the purpose of the system is to vent noncondensible gases from the RCS which may inhibit core cooling during natural circulation, the vents must not lead to an unacceptable increase in the probability of a loss-of-coolant accident (LOCA) or a challenge to containment integrity. Since these vents form a part of the reactor coolant pressure boundary, the design of the vents shall conform to the requirements of Appendix A to 10 CFR, Part 50, "General Design Criteria." The vent system shall be designed with sufficient redundancy that assures a low probability of inadvertent or irreversible actuation.

Each licensee shall provide the following information concerning the design and operation of the high point vent system.

(1) Submit a description of the design, location size, and power supply for the vent system along with the results of analyses for loss-of-coolant accidents initiated by a break in the vent pipe. The results of the analyses should demonstrate compliance with the acceptance criteria of 10 CFR 50.46.

(2) Submit procedures and supporting analysis for operator use of the vents that also include the information available to the operator for initiating or terminating vent usage.

Response:

See Updated FSAR Subsection 5.2.6.

Task II.B.2 Design Review of Plant Shielding and Environmental Qualification of Equipment for Spaces/Systems Which May Be Used in Post-Accident Operations (NUREG-0737)

Position:

With the assumption of a post-accident release of the radioactivity equivalent to that described in Regulatory Guides 1.3 and 1.4 (i.e., the equivalent of 50 percent of the core radioiodine, 100 percent of the core noble gas inventory, and 1 percent of the core solids are contained in the primary coolant), each licensee shall perform a radiation and shielding design review of the spaces around systems that may, as a result of an accident, contain highly radioactive materials. The design review should identify the location of vital areas and equipment, such as the control room, radwaste control stations, emergency power supplies, motor control centers, and instrument areas in which personnel occupancy may be unduly limited or safety equipment may be unduly degraded by the radiation fields during post-accident operations of these systems.

Each licensee shall provide for adequate access to vital areas and protection of safety equipment by design changes, increased permanent or temporary shielding, or post-accident procedural controls. The design review shall determine which types of corrective actions are needed for vital areas throughout the facility.

Response:

A copy of Seabrook's "Post-Accident Dose Engineering Manual" was submitted to the NRC via letter SBN-425 (dated January 21, 1983). In addition, see Updated FSAR Subsection 12.3.2.2.

Task II.B.3 Post-Accident Sampling Capability (NUREG-0737)

Position:

A design and operational review of the Reactor Coolant and Containment Atmosphere Sampling Line Systems shall be performed to determine the capability of personnel to promptly obtain (less than 1 hour) a sample under accident conditions without incurring a radiation exposure to any individual in excess of 3 and 18 rem to the whole body or extremities, respectively. Accident conditions should assume a Regulatory Guide 1.3 or 1.4 release of fission products. If the review indicates that personnel could not promptly and safely obtain the samples, additional design features or shielding should be provided to meet the criteria.

A design and operational review of the radiological spectrum analysis facilities shall be performed to determine the capability to promptly quantify (in less than 2 hours) certain radionuclides that are indicators of the degree of core damage. Such radionuclides are noble gases (which indicate cladding failure), iodines and cesiums (which indicate high fuel temperatures), and nonvolatile isotopes (which indicate fuel melting). The initial reactor coolant spectrum should correspond to a Regulatory Guide 1.3 or 1.4 release. The review should also consider the effects of direct radiation from piping and components in the Auxiliary Building and possible contamination and direct radiation from airborne effluents. If the review indicates that the analyses required cannot be performed in a prompt manner with existing equipment, then design modifications or equipment procurement shall be undertaken to meet the criteria.

In addition to the radiological analyses, certain chemical analyses are necessary for monitoring reactor conditions. Procedures shall be provided to perform boron and chloride chemical analyses, assuming a highly radioactive initial sample (Regulatory Guide 1.3 or 1.4 source term). Both analyses shall be capable of being completed promptly (i.e., the boron sample analysis within an hour and the chloride sample analysis within a shift).

Response:

See Updated FSAR Subsection 9.3.2.

WCAP-14986-A, "Post Accident Sampling System Requirements: A Technical Basis," provided justification for eliminating the various PASS sampling requirements. The NRC issued a Safety Evaluation dated June 14, 2000, approving this topical report. Amendment 78 to Facility Operating License NPF-86 deleted the PASS Administrative Controls from the Technical Specifications, superceding the NUREG-0737 requirements. The Post Accident Sampling System, as modified, maintains the capability to obtain archive samples from the RCS and containment sump, and to sample the containment atmosphere.

Percent hydrogen in gaseous samples is analyzed by gas chromatography. The method is applicable in the range of 1% to pure hydrogen. High concentrations are determined by varying sample injection volume.

It has been determined that hydrogen is most accurately determined in the presence of helium by calibration of the gas chromatograph with standards containing equal amounts of both gases with a balance of argon. Good peak separation is obtained with good reproducibility.

The column is baked at 125°C after the peak has been analyzed in order to prevent xenon poisoning.

Task II.B.4 Training for Mitigating Core Damage (NUREG-0737)

Position:

Licensees are required to develop a training program to teach the use of installed equipment and systems to control or mitigate accidents in which the core is severely damaged. They must then implement the training program.

Response:

See Updated FSAR Subsections 13.2.1 and 13.2.2.

Task II.D.1 Performance Testing of Boiling Water Reactor and Pressurized Water Reactor Relief and Safety Valves (NUREG-0737)

Position:

Pressurized water reactor licensees and applicants shall conduct testing to qualify the reactor coolant system relief and safety valves under expected operating conditions for design basis transients and accidents.

Response:

Seabrook complies with Task II.D.1. Refer to SBN-969, dated March 17, 1986, NYN-87136, dated November 23, 1987 and NYN-89057, dated May 8, 1989 for a discussion of testing to qualify Seabrook's reactor coolant system relief and safety valves.

Task II.D.3 Direct Indication of Relief and Safety Valve Position (NUREG-0737)

Position:

Reactor coolant system relief and safety valves shall be provided with a positive indication in the control room derived from a reliable valve position detection device or a reliable indication of flow in the discharge pipe.

Response:

See Updated FSAR Section 7.5 and Subsection 5.2.2.

Task II.E.1.1 Auxiliary Feedwater System Evaluation (NUREG-0737)

Position:

The Office of Nuclear Reactor Regulation is requiring re-evaluation of the Auxiliary Feedwater (AFW) Systems for all PWR operating plant licensees and operating license applications. This action includes:

(1) Perform a simplified AFW system reliability analysis that uses event-tree and fault-tree logic techniques to determine the potential for AFW system failure under various loss of main feedwater transient conditions. Particular emphasis is given to determining potential failures that could result from human errors, common causes, single point vulnerabilities, and test and maintenance outages;

(2) Perform a deterministic review of the AFW system using the acceptance criteria of Standard Review Plan Subsection 10.4.9 and associated Branch Technical position ASB 10-1 as principal guidance; and

(3) Re-evaluate the AFW system flowrate design bases and criteria.

Response:

See Updated FSAR Sections 6.8 and 7.3.

Task II.E.1.2 Auxiliary Feedwater System Automatic Initiation and Flow Indication (NUREG-0737) Part 1: Auxiliary Feedwater System Automatic Initiation

Position:

Consistent with satisfying the requirements of General Design Criterion 20 of Appendix A to 10 CFR, Part 50, with respect to the timely initiation of the Auxiliary Feedwater System (AFWS), the following requirements shall be implemented in the short term:

(1) The design shall provide for the automatic initiation of the AFWS.

(2) The automatic initiation signals and circuits shall be designed so that a single failure will not result in the loss of AFWS function.

(3) Testability of the initiating signals and circuits shall be a feature of the design.

(4) The initiating signals and circuits shall be provided from the emergency buses.

(5) Manual capability to initiate the AFWS from the control room shall be retained and shall be implemented so that a single failure in the manual circuits will not result in the loss of system function.

(6) The AC motor driven pumps and valves in the AFWS shall be included in the automatic actuation (simultaneous and/or sequential) of the loads onto the emergency buses.

(7) The automatic initiating signals and circuits shall be designed so that their failure will not result in the loss of manual capability to initiate the AFWS from the control room.

In the long term, the automatic initiation signals and circuits shall be upgraded, in accordance with safety grade requirements.

Response:

Seabrook Station refers to its Auxiliary Feedwater System as an Emergency Feedwater System (see Updated FSAR Sections 6.8 and 7.3).

Task II.E.1.2
Part (2) Auxiliary Feedwater System Automatic Initiation and Flow Indication (NUREG-0737) Part 2: Auxiliary Feedwater System Flowrate Indication

Position:

Consistent with satisfying the requirements set forth in General Design Criterion 13 to provide the capability in the control room to ascertain the actual performance of the AFWS when it is called to perform its intended function, the following requirements shall be implemented:

(1) Safety-grade indication of auxiliary feedwater flow to each steam generator shall be provided in the control room.

(2) The auxiliary feedwater flow instrument channels shall be powered from the emergency buses, consistent with satisfying the emergency power diversity requirements of the AFWS set forth in Auxiliary System Branch Technical Position 10-1 of the Standard Review Plan, Subsection 10.4.9.

Response:

The flows in all four individual emergency feedwater lines are indicated at the main control board and at the remote safe shutdown panels. The design details of the safety-related display instrumentation are presented in Updated FSAR Sections 6.8 and 7.5.

Task II.E.3.1 Emergency Power Supply for Pressurizer Heaters (NUREG-0737)

Position:

Consistent with satisfying the requirements set forth in General Design Criteria 10, 14, 15, 17, and 20 of Appendix A to 10 CFR, Part 50, for the event of loss of offsite power, the following requirements shall be implemented:

(1) The pressurizer heater power supply design shall provide the capability to supply, from either the offsite power source or the emergency power source (when offsite power is not available), a predetermined number of pressurizer heaters and associated controls necessary to establish and maintain natural circulation at hot standby conditions. The required heaters and their controls shall be connected to the emergency buses in a manner that will provide redundant power supply capability.

(2) Procedures and training shall be established to make the operator aware of when and how the required pressurizer heaters shall be connected to the emergency buses. If required, the procedures shall identify under what conditions selected emergency loads can be shed from the emergency power source, to provide sufficient capacity for the connection of the pressurizer heaters.

(3) The time required to accomplish the connection of the preselected pressurizer heater to the emergency buses shall be consistent with the timely initiation and maintenance of natural circulation conditions.

(4) Pressurizer heater motive and control power interfaces with the emergency buses shall be accomplished through devices that have been qualified in accordance with safety grade requirements.

Response:

See Updated FSAR Subsection 8.3.1.

Task II.E.4.1 Dedicated Hydrogen Penetrations (NUREG-0737)

Position:

Plants using external recombiners or purge systems for post-accident combustible gas control of the containment atmosphere should provide containment penetration systems for external recombiner or purge systems that are dedicated to that service only, that meet the redundancy and single failure requirements of the General Design Criteria 54 and 56 of Appendix A to 10 CFR 50, and that are sized to satisfy the flow requirements of the recombiner or purge system.

The procedures for the use of combustible gas control systems following an accident that results in a degraded core and release of radioactivity to the containment must be reviewed, and revised, if necessary.

Response:

Seabrook Station utilizes two separate and redundant Westinghouse thermal hydrogen recombiners located on the 25'-0" elevation inside the Containment Building. Thus, no pipe penetrations are required.

The backup purge system consists of two separate and redundant pipeline/isolation valve/penetration systems sized for a normal 2 of containment volume/day (38.1 cfm) flow and a maximum of 1,000 cfm.

See Updated FSAR Subsection 6.2.5.

Task II.E.4.2 Containment Isolation Dependability (NUREG-0737)

Position:

(1) Containment isolation system designs shall comply with the recommendations of Standard Review Plan Subsection 6.2.4 (i.e., that there be diversity in the parameters sensed for the initiation of containment isolation);

(2) All plant personnel shall give careful consideration to the definition of essential and nonessential systems, identify each system determined to be essential, identify each system determined to be nonessential, describe the basis for selection of each essential system, modify their containment isolation designs accordingly, and report the results of the re-evaluation to the NRC;

(3) All nonessential systems shall be automatically isolated by the containment isolation signal;

(4) The design of control systems for automatic containment isolation valves shall be such that resetting the isolation signal will not result in the automatic reopening of containment isolation valves. Reopening of containment isolation valves shall require deliberate operator action;

(5) The containment setpoint pressure that initiates containment isolation for nonessential penetrations must be reduced to the minimum compatible with normal operating conditions;

(6) Containment purge valves that do not satisfy the operability criteria set forth in Branch Technical Position CSB 6-4 or the Staff Interim Position of October 23, 1979 must be sealed closed as defined in SRP 6.2.4, item III.3.f, during operational conditions 1, 2, 3, and 4. Furthermore, these valves must be verified to be closed at least every 31 days; and

(7) Containment purge and vent isolation valves must close on a high radiation signal.

Response:

See Updated FSAR Section 7.3 and Subsection 6.2.4

Task II.F.1 Additional Accident Monitoring Instrumentation

Task II.F.1 Attachment 1: Noble Gas Effluent Monitor (NUREG-0737)

Position:

Noble gas effluent monitors shall be installed with an extended range designed to function during accident conditions as well as during normal operating conditions. Multiple monitors are considered necessary to cover the range of interest.

(1) Noble gas effluent monitors with an upper range capability of 10^5 μCi/cc (Xe-133) are considered to be practical and should be installed in all operating plants.

(2) Noble gas effluent monitoring shall be provided for the total range of concentration extending from normal condition (As Low As Reasonably Achievable - ALARA) concentrations to a maximum of 10^5 μCi/cc (Xe-133). Multiple monitors are considered to be necessary to cover the range of interest. The range capacity of individual monitors should overlap by a factor of ten.

Response:

See Updated FSAR Section 7.5, and Subsections 11.5.2.1j, 11.5.2.1k, and 12.3.4.2. Additional information on this subject was submitted to the NRC, SBN-1063, dated May 20, 1986.

Task II.F.1 Attachment 2: Sampling and Analysis of Plant Effluents (NUREG-0737)

Position:

Because iodine gaseous effluent monitors for the accident condition are not considered to be practical at this time, capability for effluent monitoring of radioiodines for the accident condition shall be provided with sampling conducted by absorption on charcoal or other media, followed by on-site laboratory analysis.

Response:

See Updated FSAR Section 7.5, and Subsections 12.3.4.2 and 12.5.2. Additional information is presented in a NHY letter to the NRC, NYN-89068, dated May 30, 1989.

Task II.F.1 Attachment 3: Containment High-Range Radiation Monitor (NUREG- 0737)

Position:

In containment radiation level monitors with a maximum range of 10^8 rad/hr shall be installed. A minimum of two (2) such monitors that are physically separated shall be provided. Monitors shall be developed and qualified to function in an accident environment.

Response:

See Updated FSAR Section 7.5 and Subsection 12.3.4.

Task II.F.1 Attachment 4: Containment Pressure Monitor (NUREG-0737)

Position:

A continuous indication of containment pressure shall be provided in the control room of each operating reactor. Measurement and indication capability shall include three (3) times the design pressure of the containment for concrete, four (4) times the design pressure for steel, and -5 psig for all containments.

Response:

See Updated FSAR Sections 7.3 and 7.5.

Continuous indication and recording of containment pressure is provided. This indication covers the full range from -5 psig to three times design pressure, and supplements other narrow range indication provided for containment pressure. These channels fully meet the requirements for Design Category 1 instrumentation. Design details are provided in Table 7.5-1.

ANSI/ANS 4.5 recommends an accuracy of ±10 percent of span for this wide range measurement. The accuracy of this measurement has been determined and satisfies this recommendation. The response time is similar to the 0-60 psig containment pressure channels used for ESF actuation.

The operating crews will use the 0-60 psig containment pressure indication in support of the Emergency Response Procedures (ERPs). Further discussion of this indication is provided in Updated FSAR Section 7.3 and the ERP background documents.

Task II.F.1 Attachment 5: Containment Water Level Monitor (NUREG-0737)

Position:

A continuous indication of containment level shall be provided in the control room for all plants. A narrow range instrument shall be provided for PWRs and cover the range from the bottom, to the top of the containment sump. A wide range instrument shall also be provided for PWRs and shall cover the range from the bottom of the containment to the elevation equivalent to a 600,000 gallon capacity. For BWRs, a wide range instrument shall be provided and cover the range from the bottom to 5 feet above the normal water level of the suppression pool.

Response:

See Updated FSAR Section 7.5 and Subsection 6.2.2.

Task II.F.1 Attachment 6: Containment Hydrogen Monitor (NUREG-0737)

Position:

A continuous indication of hydrogen concentration in the containment atmosphere shall be provided in the control room. Measurement capability shall be provided over the range of 0 to 10 percent hydrogen concentration under both positive and negative ambient pressure.

Response:

See Updated FSAR Section 7.5 and Subsections 6.2.2 and 6.2.5.2.

Task II.F.2 Instrumentation for Detection of Inadequate Core Cooling (NUREG-0737)

Position:

Licensees shall provide a description of any additional instrumentation or controls (primary or backup) proposed for the plant to supplement existing instrumentation (including primary coolant saturation monitors) in order to provide an unambiguous, easy-to-interpret indication of Inadequate Core Cooling (ICC). A description of the functional design requirements for the system shall also be included. A description of the procedures to be used with the proposed equipment, the analysis used in developing these procedures, and a schedule for installing the equipment shall be provided.

Response:

See Updated FSAR Subsection 4.4.6.5. In addition, a complete description of Seabrook's "Instrumentation for Detection of Inadequate Core Cooling" was submitted to the NRC via letter SBN-952 (dated February 24, 1986).

Task II.G.1 Emergency Power for Pressurizer Equipment (NUREG-0737)

Position:

Consistent with satisfying the requirements of General Design Criteria 10, 14, 15, 17, and 20, of Appendix A to 10 CFR, Part 50, for the event of loss of offsite power, the following positions shall be implemented.

Power Supply for Pressurizer Relief and Block Valves and Pressurizer Level Indicators

(1) Motive and control components of the power operated relief valves (PORVs) shall be capable of being supplied from either the offsite power source or the emergency power source when the offsite power is not available.

(2) Motive and control components associated with the PORV block valves shall be capable of being supplied from either the offsite power source or the emergency power source when the offsite power is not available.

(3) Motive and control power connections to the emergency buses for the PORVs and their associated block valves shall be through devices that have been qualified in accordance with safety grade requirements.

(4) The pressurizer level indication instrument channels shall be powered from the vital instrument buses. The buses shall have the capability of being supplied from either the offsite power source or the emergency source when offsite power is not available.

Response:

See Updated FSAR Section 7.5 and Subsection 8.3.1.

Task II.K.1 IE Bulletins on Measures to Mitigate Small Break LOCAs and Loss of Feedwater Accidents (NUREG-0694)

Task II.K.1.5 Review ESF Valves (NUREG-0660, Table C.1)

Position:

Review all valve position and positioning requirements and positive controls and all related test and maintenance procedures to assure proper ESF functioning.

Response:

Proper ESF functioning was verified through completion of the applicable portions of the startup test program prior to fuel load.

Task II.K.1.10 Operability Status (NUREG-0660, Table C.1)

Position:

Review and modify (as required) procedures for removing safety-related systems from service (and restoring to service) to assure operability status is known.

Response:

See Updated FSAR Subsection 13.5.1.

Task II.K.1.17 Trip Per Low-Level Bistables (NUREG-0694)

Position:

For Westinghouse designed reactors, trip the pressurizer low-level coincident signal bistables, so that safety injection would be initiated when the pressurizer low pressure setpoint is reached regardless of the pressurizer level. See Bulletin 79-06A and Revision 1, Item 3 in NUREG-0560.

Response:

Reactor trip and safety injection are initiated on low pressurizer pressure without any requirement for coincident low pressurizer level. See Updated FSAR Figure 7.2-8.

Task II.K.2 Commission Orders on B&W Plants

These items from Task II.K.2 have been made requirements for other pressurized water reactor designs. These are discussed below.

Task II.K.2.13 Thermal Mechanical Report - Effect of High Pressure Injection on Vessel Integrity for Small Break Loss-of-Coolant Accident with No Auxiliary Feedwater (NUREG-0737)

Position:

A detailed analysis shall be performed of the thermal mechanical conditions in the reactor vessel during recovery from small breaks with an extended loss of all feedwater.

Response:

Reference 8 describes the probabilistic methodology developed by the Westinghouse Owners Group (WOG) and Westinghouse for treating the Pressurized Thermal Shock (PTS) issue. It also documents the results of applying this methodology to Westinghouse designed PWRs such as Seabrook. It goes beyond the specific concern of NUREG-0737, Item II.K.2.13 and considers the risk of PWR reactor vessel failure from all PTS events. It supports the basis for the requirements of 10 CFR 50.61, "Fracture Toughness Requirements for Protection Against Pressurized Thermal Shock Events." Namely, PWR pressure vessels with conservatively calculated values of RT_{NDT} less than 270°F for plate material and axial welds, and less than 300°F for circumferential welds, present an acceptably low risk of vessel failure from PTS events.

In Reference 9, the RT_{NDT} value for the Seabrook reactor vessel was conservatively calculated in accordance with the requirements of 10 CFR 50.61. The total RT_{NDT} value at end-of-life (32 EFPY) is 126°F. This value satisfies the screening criteria stated above.

The results of Reference 8 are applicable if plant emergency procedures based on the Emergency Response Guidelines (ERGs) are available and the operators are properly trained to follow the procedures. Since the Seabrook Emergency Operating Procedures (EOPs) are based on the ERGs, and the operators are trained in the use of the EOPs (see Updated FSAR Section 13.2), the Reference 8 results are applicable.

It is therefore concluded that operation of Seabrook Station will not pose an undue risk of vessel failure from PTS events.

Task II.K.2.17 Potential for Voiding in the Reactor Coolant System During Transients

Position:

Analyze the potential for voiding in the Reactor Coolant System (RCS) during anticipated transients.

Response:

Westinghouse (in support of the Westinghouse Owners Group) has performed a study which addresses the potential for void formation in Westinghouse designed nuclear steam supply systems during natural circulation cooldown/depressurization transients. This study has been submitted to the NRC by the Westinghouse Owners Group (Reference 1) and is applicable to Seabrook Station.

In addition, the Westinghouse Owners Group is currently developing appropriate modifications to the Westinghouse Owners Group Reference Operating Instructions to take the results of the study into account to preclude void formation in the upper head region during natural circulation cooldown/depressurization transients, and to specify those conditions under which upper head voiding may occur. NHY utilized the generic guidance developed by the Westinghouse Owners Group in the development of plant specific operating procedures.

Task II.K.2.19 Sequential Auxiliary Feedwater Flow Analysis

Position:

Provide a benchmark analysis of sequential Auxiliary Feedwater (AFW) flow to the steam generators following a loss of feedwater.

Response:

Not applicable to Westinghouse pressurized water reactors per NRC letter to Duquesne Light, dated June 29, 1981.

Task II.K.3 Final Recommendations of B&O Task Force (NUREG-0737)

Task II.K.3.1 Installation and Testing of Automatic Power-Operated Relief Valve Isolation System (NUREG-0737)

Position:

All PWR licensees should provide a system that uses the PORV block valve to protect against a small break loss-of-coolant accident. This system will automatically cause the block valve to close when the reactor coolant system pressure decays after the PORV has opened. Justification should be provided to assume that failure of this system would not decrease overall safety by aggravating transients and accidents.

Each licensee shall perform a confirmatory test of the automatic block valve closure system following installation.

Response:

Westinghouse, as part of the response prepared for the Westinghouse Owners Group to address Item II.K.3.2, has evaluated the necessity of incorporating an automatic pressurizer power-operated relief valve isolation system. This evaluation is documented in Reference 2 and concluded that such a system should not be required.

In addition, information has been submitted to the NRC in SBN-1038 dated May 7, 1986.

Task II.K.3.2 Report on Overall Safety Effect of Power-Operated Relief Valve Isolation System (NUREG-0737)

Position:

(1) The licensee should submit a report for staff review documenting the various actions taken to decrease the probability of a small break loss-of-coolant accident (LOCA) caused by a stuck-open power-operated relief valve (PORV) and show how those actions constitute sufficient improvements in reactor safety.

(2) Safety valve failure rates based on past history of the operating plants designed by the specific Nuclear Stream Supply System (NSSS) vendor should be included in the report submitted in response to (1) above.

Response:

As stated in the response to item II.K.3.1, the Westinghouse Owners Group has submitted a Westinghouse prepared report (Reference 2) that provides a probabilistic analysis to determine the probability of a PORV LOCA, estimates the effect on the post-TMI modifications, evaluates an automatic PORV isolation concept, and provides PORV and safety valve operational data for Westinghouse plants. Because of the sensitivity analyses included in the report, the report is generic and is applicable to Seabrook Station. The report identifies a significant reduction in the PORV LOCA probability as a result of post-TMI modifications, and the calculations compare favorably with the operational data for Westinghouse plants (included as an appendix to the report).

In addition, information has been submitted to the NRC in SBN-1038 dated May 7, 1986.

Task II.K.3.3 Reporting SV and PORV Challenges and Failures (NUREG-0694)

Position:

Assure that any failure of a PORV or safety valve to close will be reported to the NRC promptly.

Response:

Any failure of a safety or relief valve will be reported promptly to the NRC in accordance with 10CFR50.72 and 10CFR50.73.

Task II.K.3.5 Automatic Trip of Reactor Coolant Pumps During Loss-of-Coolant Accident (NUREG-0737)

Position:

Tripping of the reactor coolant pumps in case of a loss-of-coolant accident (LOCA) is not an ideal solution. Licensees should consider other solutions to the small break LOCA problem (for example, an increase in safety injection flow rate). In the meantime, until a better solution is found, the reactor coolant pumps should be tripped automatically in case of small break LOCA. The signals designated to initiate the pump trip are discussed in NUREG-0623.

Response:

In response to IE Bulletins 79-05C and 79-06C, Westinghouse (in support of the Westinghouse Owners Group) performed an analysis of delayed Reactor Coolant Pump (RCP) trip during small break LOCAs. This analysis is documented in Reference 3 and is the basis for the Westinghouse position on RCP trip (i.e., automatic RCP trip is not necessary since sufficient time is available for manual tripping of the RCPs).

Westinghouse (again in support of the Westinghouse Owners Group) has performed test predictions of the LOFT Experiment L3-6. The results of these predictions are documented in References 4, 5 and 6. The results constitute both a best estimate model prediction with the NOTRUMP computer program and an evaluation model prediction with the Westinghouse FLASH computer program using the supplied set of initial boundary assumptions.

Subsequently, the NRC issued Generic Letters 83-10C and 83-10D which superseded IE Bulletins 79-05C and 79-06C. In response, the Westinghouse Owners Group (with assistance from Westinghouse) developed the generic response to Generic Letters 83-10C and 83-10D. This response has been submitted to the NRC (Reference 7).

With regard to the plant specific requirements of Generic Letters 83-10C and 83-10D, Seabrook Station has the following:

> The Revision 1 to the WOG Emergency Response Guidelines has been implemented into the plant specific procedures.
>
> The training program includes instruction to operators in their responsibility for performing RCP trip in the event of a small break LOCA. In particular, the operators are trained in prioritization of actions following engineered safety features actuation.
>
> The instrumentation the operators use to determine the need for RCP trip is part of the instrumentation used for ICC (see Item II.F.2).

In light of the above information, Seabrook Station does not consider that design modifications are necessary.

Supplementary information on this subject as a result of a discussion between the NRC staff and the applicant, is summarized in an NRC letter to NHY dated May 20, 1986, and in NHY's response to the NRC submitted in SBN-1068, dated May 27, 1986.

Task II.K.3.7 Evaluation of Power-Operated Relief Valve Opening Probability During Overpressure Transient (NUREG-0737)

Position:

Most overpressure transients should not result in the opening of the Power-Operated Relief Valve (PORV). Therefore, licensees should document that the PORV will open in less than 5 percent of all anticipated overpressure transients using the revised setpoints and anticipatory trips for the range of plant conditions which might occur during a fuel cycle.

Response:

The Westinghouse Owners Group has submitted a report (Reference 2) which provides probabilistic analysis of PORV operational data for Westinghouse plants. The report is generic and applicable to Seabrook Station. For high-head plants with post-TMI modifications (i.e., Seabrook Station), the report shows that a PORV will open in less than 5 percent of all anticipated overpressure transients for the range of plant conditions during a fuel cycle.

Task II.K.3.9 Proportional Integral Derivative Controller Modification Position (NUREG-0737)

Position:

The Westinghouse recommended modifications to the Proportional Integral Derivative (PID) controller should be implemented by affected licensees.

Response:

The Seabrook design includes a Proportional Integral Derivative (PID) controller in the power-operated relief valve control circuit (see Updated FSAR Figure 7.7-4 and Figure 7.2-11). The time derivative constant in the PID controller for the pressurizer PORV will be turned to "OFF." The appropriate plant procedure for calibrating the setpoints in this nonsafety-grade system will reflect this decision.

Setting the derivative time constant to "OFF," in effect removes the derivative action from the controller. Removal of the derivative action will decrease the likelihood of opening the pressurizer PORV since the actual signal for the valve is then no longer sensitive to the rate of change of pressurizer pressure.

Task II.K.3.10 Proposed Anticipatory Trip Modification (NUREG-0737)

Position:

The anticipatory trip modification proposed by some licensees to confine the range of use to high power levels should not be made until it has been shown on a plant-by-plant basis that the probability of a small break loss-of-coolant accident (LOCA) resulting from a stuck-open Power-Operated Relief Valve (PORV) is substantially unaffected by the modifications.

Response:

The Seabrook design includes the capability to undergo a 50 percent load reduction without requiring a reactor trip. This capability is made available through the use of a nominal 40 percent steam bypass to the condenser and automatic rod control to reduce core power by 10 percent. Plant analysis shows that pressurizer power-operated relief valves (PORVs) will not be challenged by a 50 percent load reduction from full power. An evaluation of a full load reduction from 50 percent power also shows that PORVs will not be challenged even though the reactor is not tripped. The deletion of a direct (or anticipatory) reactor trip from turbine trip below 50 percent power will not cause the PORVs to be challenged. Therefore, the probability of a small break loss-of-coolant accident (LOCA) from a stuck-open PORV is substantially unaffected by the deletion of an anticipatory reactor trip from turbine trip below 50 percent power.

Task II.K.3.11 Justification for Use of Certain PORVs (NUREG-0694)

Position:

Demonstrate that the PORV installed in the plant has a failure rate equivalent to, or less than, the values for which there is an operating history.

Response:

The PORVs utilized at Seabrook are a relatively new design developed by the Garrett Pneumatic Systems Division of the Garrett Corporation. Similar type valves are presently being supplied to both Combustion Engineering and Westinghouse for use in their NSSS design. At this time, there is insufficient operating data upon which to base a statistically accurate failure rate history.

However, a valve of similar design to that supplied to both Combustion Engineering and Westinghouse was tested at the Wyle Laboratories as a part of the EPRI/PWR Safety and Relief Valve Test Program. In addition to the successful functional test results, the Garrett valve operated normally, with no tendency to fail to operate, either open or closed, through at least 79 cycles.

As operating history is gained on this particular valve design, and should an abnormal failure rate become apparent, appropriate corrective action will be taken.

Task II.K.3.12 Confirm Existence of Anticipatory Reactor Trip Upon Turbine Trip (NUREG-0737)

Position:

Licensees with Westinghouse-designed operating plants should confirm that their plants have an anticipatory reactor trip upon turbine trip. The licensee of any plant where this trip is not present should provide a conceptual design and evaluation for the installation of this trip.

Response:

The Seabrook design includes an anticipatory reactor trip upon turbine trip at power levels above P-9 (see Updated FSAR Figure 7.2-2 and Figure 7.2-15).

Task II.K.3.17 Report on Outage of Emergency Core-Cooling Systems Licensee Report and Proposed Technical Specification Changes (NUREG-0737

Position:

Several components of the Emergency Core Cooling (ECC) Systems are permitted by technical specifications to have substantial outage times (e.g., 72 hours for one diesel generator; 14 days for the HPCI system). In addition, there are no cumulative outage time limitations for ECC systems. Licensees should submit a report detailing outage dates and lengths of outages for all ECC systems for the last 5 years of operation. The report should also include the causes (i.e., controller failure, spurious isolation).

Response:

Procedures for collecting and submitting information concerning the unavailability of the ECC system due to outages have been developed. Seabrook Station will submit ECC system outage information in accordance with the INPO Safety System Unavailability Monitoring program. All functional failures of ECC systems shall also be included in the Equipment Performance and Information Exchange System (EPIX). This method of reporting will provide for a current, on-line reporting system.

See Updated FSAR Subsection 13.5.1.

Task II.K.3.25 Effect of Loss of Alternating Current Power on Pumps Seals (NUREG-0737)

Position:

The licensee should determine, on a plant-specific basis, by analysis or experiment, the consequence of a loss of cooling water to the reactor recirculation pump seal coolers. The pump seals should be designed to withstand a complete loss of alternating current (AC) power for at least 2 hours. Adequacy of the seal design should be demonstrated.

Response:

During normal operation, seal injection flow from the Chemical and Volume Control System is provided to cool the RCP seals, and the Component Cooling Water System provides flow to the thermal barrier heat exchanger to limit the heat transfer from the reactor coolant to the RCP internals. In the event of loss of offsite power, the RCP motor is de-energized and both of these cooling supplies are terminated; however, the diesel generators are automatically started and either seal injection flow or component cooling water to the thermal barrier heat exchanger is automatically restored within 12 or 32 seconds, respectively. Either of these cooling supplies is adequate to provide seal cooling and prevent seal failure due to loss of seal cooling during a loss of offsite power for at least 2 hours.

Task II.K.3.30 Revised Small Break Loss-of-Coolant Accident Methods to Show Compliance with 10 CFR Part 50, Appendix K (NUREG-0737)

Position:

The analysis methods used by Nuclear Steam Supply System (NSSS) vendors and/or fuel suppliers for small break loss-of-coolant accident (LOCA) analysis for compliance with Appendix K to 10 CFR Part 50 should be revised, documented, and submitted for approval. The revisions should account for comparisons with experimental data, including from the LOFT Test and Semiscale Test facilities.

Response:

The Westinghouse small break evaluation model (NOTRUMP) used to analyze Seabrook Station is in conformance with 10 CFR Part 50, Appendix K and was approved by the NRC on May 21, 1985. This completes the TMI Action Item II.K.3.30 for Seabrook Station.

In accordance with TMI Action Item II.K.3.31., generic analysis was submitted in June 1986 to demonstrate that the analysis performed with NOTRUMP is conservative.

Task II.K.3.31 Plant Specific Calculations to Show Compliance with 10 CFR, Part 50.46 (NUREG-0737)

Position:

Plant-specific calculations using NRC-approved models for small break Loss-of-Coolant Accidents (LOCAs) as described in Item II.K.3.30 to show compliance with 10 CFR 50.46 should be submitted for NRC approval by all licensees.

Response:

NHY letter (SBN-1175) dated July 31, 1986, references WCAP-11145 which demonstrates, generically, the plant's compliance with 10 CFR 50.46. This completes TMI Action Item II.K.3.31 for Seabrook Station.

Task III.A.1.1 Upgrade Licensee Emergency Preparedness - Short Term (NUREG-0660)

Position:

Licensees will upgrade emergency preparedness in accordance with the requirements described in the NRC "Action Plan for Promptly Improving Emergency Preparedness" (SECY 79-450), which was distributed to all licensees during regional meetings in August, 1979, and in accordance with subsequently issued criteria (NUREG-0654).

Response:

Refer to the Seabrook Station Radiological Emergency Plan.

Task III.A.1.2 Upgrade Emergency Support Facilities

Position:

Each operating nuclear power plant shall maintain an onsite Technical Support Center (TSC) separate from, and in close proximity to, the control room that has the capability to display and transmit plant status to those individuals who are knowledgeable of, and responsible for, engineering and management support of reactor operations in the event of an accident. The center shall be habitable to the same degree as the control room for postulated accident conditions. The licensee shall revise his emergency plans, as necessary, to incorporate the role and location of the TSC. Records that pertain to the as-built conditions and layout of structures, systems, and components shall be readily available to personnel in the TSC.

An Operational Support Center (OSC) shall be established separate from the control room and other emergency response facilities as a place where operations support personnel can assemble and report in an emergency situation to receive instructions from the station staff. Communications shall be provided between the OSC, TSC, EOF, and control room.

An Emergency Operation Facility (EOF) will be operated by a licensee for continued evaluation and coordination of all licensee activities related to an emergency having, or potentially having, environmental consequences.

Response:

See Section 6, "Emergency Facilities and Equipment," and Section 8, "Organization," of the Seabrook Station Radiological Emergency Plan.

Task III.A.2 Improving Licensee Emergency Preparedness Long Term

Position:

Each nuclear facility shall upgrade its emergency plans to provide reasonable assurance that adequate protective measures can and will be taken in the event of a radiological emergency. Specific criteria to meet this requirement are delineated in NUREG-0654 (FEMA-REP-1), "Criteria for Preparation and Evaluation of Radiological Emergency Response Plans and Preparation in Support of Nuclear Power Plants."

Response:

Refer to the Seabrook Station Radiological Emergency Plan.

Task III.D.1.1 Integrity of Systems Outside Containment Likely to Contain Radioactive Material for Pressurized Water Reactors & Boiling Water Reactors (NUREG-0737)

Position:

Applicants shall implement a program to reduce leakage from systems outside containment that would, or could, contain highly radioactive fluids during a serious transient or accident to as-low-as-practical levels. This program shall include the following:

(1) Immediate Leak Reduction -

(a) Implement all practical leak reduction measures for all systems that could carry radioactive fluid outside the containment.

(b) Measure actual leakage rates with system in operation and report them to the NRC.

(2) Continuing Leak Reduction - Establish and implement a program of preventive maintenance to reduce leakage to as-low-as practical levels. This program shall include periodic integrated leak tests at intervals not to exceed each refueling cycle.

Response:

a. Systems

The surveillance program includes the following systems:

Residual Heat Removal (RHR)
Containment Spray Recirculation (CBS)
Charging System (CS) (Note 1)
Safety Injection (SI)
Primary Coolant Sampling (SS) (Note 2)
Hydrogen Detection (CGC) (Note 3)

Systems that may contain radioactive fluids under post-accident conditions that are not included in this surveillance are:

Hydrogen recombiners (CGC)

Basis: Seabrook's hydrogen recombiners are located inside the Primary Containment Building.

Waste Gas (VG)

Basis: The vent gas headers in the containment are only used during infrequent maintenance operations during refueling outages such as the fill and vent of the Reactor Coolant System. Use of the system involves containment entry to open normally closed manual valves. This system is not required for post-accident monitoring or for accident mitigation. Refer to Note 1.

b. Immediate Leak Reduction

Leak reduction program base line data was taken during initial plant start-up testing. The leakage found was measured and corrective action has been initiated for affected components. The leakage obtained during preoperational surveillance and inspections is contained in the Preoperational Leakage Reduction Tracking and History Report submitted to the NRC by letter NYN-87033, March 16, 1987.

c. Continuing Leak Reduction

The leakage reduction program will continue throughout the life of the plant. A periodic surveillance procedure will either be conducted on an interval of once per refueling cycle, or specific portions may be conducted as part of the Containment Leakage Rate Testing Program. The surveillance procedure contains inspection sheets that are used to indicate systems/lines which are visually inspected. Findings will be documented. Visual inspections are performed either with the system in operation or inspected after a functional system test for leakage determination.

Types of potential leakage locations include: valve body/bonnet joints, packing, mechanical flange connections, pump mechanical seals, etc. Boric acid deposit locations will be documented on the data sheets. The findings of the surveillance will be documented such that repetitive locations can be addressed for corrective actions. Corrective maintenance will be per the applicable work control documents.

d. "North Anna" Concerns (Note 4)

Actions have been taken (and will continue) to reduce potential release paths due to design and operation deficiencies. Preoperational design reviews have been completed to ensure the best possible system configuration and leakage reduction features such as valve stem leakoff, capped drain connections, orientation for maintenance access, etc. Operational issues such as component tagging, preoperational checkout of operating procedures, and the corrective action/root cause features of the plant problem reporting system will ensure the highest possible degree of operator performance.

Notes:

1. The high head safety injection portion of the Chemical and Volume Control System including the suction piping used during ECCS actuation (injection and recirculation modes) outside containment is included in the leakage reduction program. The letdown, degasifier, and purification subsystems are isolated during an accident situation and are not required for emergency core cooling. Seal water supply to the reactor coolant pumps does not require letdown flow and does not require makeup from the chemical and volume control tank.
2. The Post-Accident Sampling (PAS) subsystem is included in the leakage reduction surveillance test for the Primary Sample System. The gaseous post-accident samples are part of the hydrogen detection subsystem in the Combustible Gas Control System (CGC), (refer to Note 3).
3. The hydrogen detection subsystem of the Combustible Gas Control System (CGC) including the sample lines for post - accident gas samples are in the scope of the leakage reduction program. System is tested as part of the Containment Leakage Rate Testing Program. The Leakage Test Reference (SLTR) describing Option B or performance-based requirements of 10CFR50 Appendix J and Seabrook Station Technical Specifications for the Type B and Type C Leakage Rate Test Program is the basis for the CGC system testing. The Seabrook Station Option B Program is called the Containment Leakage Rate Testing (CLRT) Program.
4. NRC letter dated October 17, 1986.

Task III.D.3.3 Improved In-Plant Iodine Instrumentation Under Accident Conditions (NUREG-0737)

Position:

Each licensee shall provide equipment and associated training and procedures for accurately determining the airborne iodine concentration in areas within the facility where plant personnel may be present during an accident.

Response:

See Updated FSAR Sections 7.5, 11.5, 12.5 and Subsection 12.3.4

Task III.D.3.4 Control Room Habitability Requirements (NUREG-0737)

Position:

In accordance with Task Action Plan, Item III.D.3.4, and control room habitability, licensees shall assure that control room operators will be adequately protected against the effects of accidental release of toxic and radioactive gases and that the nuclear power plant can be safety operated or shut down under design basis accident conditions (Criterion 19, "Control Room," of Appendix A, "General Design Criteria for Nuclear Power Plants," to 10 CFR, Part 50).

Response:

See Updated FSAR Sections 6.4, 9.4, 9.5 and 12.3 that describe the methods employed to maintain the habitability of the control room during accident conditions.

1.9.2 References

1. Letter OG-57, dated April 20, 1981, R. W. Jurgensen (Chairman, Westinghouse Owners Group) to P. S. Check (NRC).
2. Wood, D. C. and Gottshall, C. L. "Probabilistic Analysis and Operational Data in Response in NUREG-0737, Item II.K.3.2 for Westinghouse NSSS Plants," WCAP-9804, February 1981.
3. "Analysis of Delayed Reactor Coolant Pump Trip During Small Loss-of-Coolant Accidents for Westinghouse Nuclear Steam Supply Systems," WCAP-9584 (Proprietary) and WCAP-9585 (Nonproprietary), August 1979.
4. Letter OG-49, dated March 3, 1981, R. W. Jurgensen (Chairman, Westinghouse Owners Group) to D. F. Ross, Jr. (NRC).
5. Letter OG-50, dated March 13, 1981, R. W. Jurgensen (Chairman, Westinghouse Owners Group) to D. F. Ross, Jr. (NRC).
6. Letter OG-60, dated June 15, 1981, R. W. Jurgensen (Chairman, Westinghouse Owners Group) to P. S. Check (NRC).
7. Letter OG-117, dated March 9, 1984, J. J. Sheppard (Chairman, Westinghouse Owners Group) to R. J. Mattson (NRC).
8. "A Generic Assessment of Significant Flaw Extension, Including Stagnant Loop Conditions, From Pressurized Thermal Shock of Reactor Vessels on Westinghouse Nuclear Power Plants," WCAP-10319, October 1983.
9. "Calculation of Operating and NTOL Vessel RT_{NDT} Values," Letter WOG-82-290, dated December 31, 1982, R. A. Muench to WOG Representatives.

SEABROOK STATION
UPDATED FINAL SAFETY ANALYSIS REPORT

CHAPTER 1
INTRODUCTION AND GENERAL DESCRIPTION OF PLANT

TABLES

1.1-1	Cross Reference - Updated FSAR Figure Numbers vs. Design Drawing Numbers
1.3-1	Design Comparison
1.3-2	Significant Design Changes from PSAR to FSAR
1.5-1	J-Loop Phase I Test Parameters
1.5-2	Phase II Test Parameters
1.6-1	Topical Reports Incorporated by Reference
1.8-1	GEI Laboratory Testing Procedures- Seabrook Station, Seabrook, New Hampshire
1.8-2	Code Cases Approved for Use for the BOP

TABLE 1.1-1 CROSS REFERENCE UFSAR FIGURE NUMBERS VS. DESIGN DRAWING NUMBERS

UFSAR FIGURE NUMBER	PREVIOUS FSAR FIGURE NUMBER	DESIGN DRAWING NUMBER	DESIGN DRAWING REVISION NUMBER	HISTORICAL	DESIGN DRAWING REVISION DATE
1.1-1, Sh. 1		LEGEND 1	5	X	5/10/02
1.1-1, Sh. 2		LEGEND 2	5	X	6/12/95
1.1-2		1-NHY-503100	5	X	3/25/92
1.2-2		1-NHY-805051	13	X	4/13/92
1.2-3		1-NHY-805052	13	X	9/08/97
1.2-4		1-NHY-805053	13	X	12/20/94
1.2-5		1-NHY-805055	9	X	4/30/96
1.2-6		1-NHY-805056	11	X	4/30/96
1.2-7		805061	18	X	11/19/90
1.2-8		1-NHY-805062	20	X	11/19/90
1.2-9		805063	13	X	11/19/90
1.2-10		805064	14	X	11/19/90
1.2-11		805065	16	X	11/19/90
1.2-12		805066	13	X	11/19/90
1.2-13		805060	14	X	11/19/90
1.2-14		805078	10	X	11/19/90
1.2-15		1-NHY-805058	10	X	9/08/97
1.2-16		1-NHY-805059	12	X	9/08/97
1.2-17		805084	4	X	11/19/90
1.2-18		805085	6	X	11/19/90
1.2-19		805086	4	X	11/19/90
1.2-20		805087	2	X	6/22/77
1.2-21		1-NHY-805088	6	X	4/13/92
1.2-22		805659	12	X	11/19/90
1.2-23		1-NHY-805660	15	X	4/30/96
1.2-24		805661	17	X	11/19/90
1.2-25		805662	15	X	11/19/90
1.2-26		1-NHY-805663	13	X	4/13/92
1.2-27		805664	13	X	3/29/85
1.2-28		805665	14	X	11/19/90
1.2-29		805667	9	X	10/19/83
1.2-30		805669	13	X	11/19/90
1.2-31		1-NHY-310431	30	X	9/08/97
1.2-32		1-NHY-500090	22	X	4/30/96
1.2-33		500091	8	X	11/19/90
1.2-34		202068	8	X	11/19/90
1.2-35		1-NHY-202069	13	X	9/08/97
1.2-36		202070	12	X	11/19/90
1.2-37		1-NHY-202052	15	X	9/08/97

UFSAR FIGURE NUMBER	PREVIOUS FSAR FIGURE NUMBER	DESIGN DRAWING NUMBER	DESIGN DRAWING REVISION NUMBER	HISTORICAL	DESIGN DRAWING REVISION DATE
1.2-38		1-NHY-202053	18	X	9/08/97
1.2-39		1-NHY-202054	11	X	4/30/96
1.2-40		202055	6	X	8/13/82
1.2-41		202056	6	X	8/13/82
1.2-42		202057	8	X	11/19/90
1.2-43		1-NHY-202058	8	X	9/08/97
1.2-44		202059	7	X	11/19/90
1.2-45		202060	6	X	8/13/82
1.2-46		1-NHY-202476	6	X	4/30/96
1.2-47		202477	3	X	11/19/90
1.2-48		202478	5	X	11/19/90
1.2-49		1-NHY-119522-1	13	X	1/09/95
1.2-50		CIV-1-ASB—119523	1	X	11/19/90
1.2-51		202065	4	X	11/19/90
1.2-52		101112	3	X	11/28/77
1.2-56		1-NHY-805068	5	X	4/30/96
1.2-57		1-NHY-202474	4	X	9/08/97
1.2-58		1-NHY-202475	4	X	9/08/97
1.2-59		1-NHY-805657	4	X	4/30//96
3.4-1		101696	12	X	12/05/90
3.8-1, Sh. 1		101401	14	X	12/05/90
3.8-1, Sh. 2		101402	14	X	1/12/84
3.8-2		101435	7	X	12/05/90
3.8-3		101444	4	X	1/11/82
3.8-3, Sh. 1		101440	10	X	12/05/90
3.8-3, Sh. 2		101441	3	X	4/03/81
3.8-4, Sh. 1		101442	4	X	1/11/82
3.8-4, Sh. 2		101443	6	X	12/05/90
3.8-5, Sh. 1		101461	12	X	12/05/90
3.8-5, Sh. 2		101463	12	X	11/16/83
3.8-6		101438	4	X	7/31/81
3.8-7		101436	3	X	1/11/82
3.8-20	3.8-18	101496	13	X	12/05/90
3.8-21	3.8-19	101496	13	X	12/05/90
3.8-22	3.8-20	805575	21	X	12/05/90
3.8-23	3.8-21	805575	21	X	12/05/90
3.8-25	3.8-23	805573	8	X	12/05/90
3.8-29	3.8-27	101425	9	X	12/05/90
3.8-31, Sh. 1	3.8-29	101334	7	X	11/19/03
3.8-31, Sh. 2		101337	7	X	11/19/03
3.8-32	3.8-30	101327	9	X	12/05/90
3.8-33	3.8-31	101635	7	X	11/19/03

UFSAR FIGURE NUMBER	PREVIOUS FSAR FIGURE NUMBER	DESIGN DRAWING NUMBER	DESIGN DRAWING REVISION NUMBER	HISTORICAL	DESIGN DRAWING REVISION DATE
3.8-34	3.8-32	101303	9	X	12/05/90
3.8-35	3.8-33	101692	1	X	12/05/90
3.8-36	3.8-34	101528	17	X	3/18/83
3.11-1		1-NHY-300219	30		11/08/16
3A-1		805067	4	X	5/29/85
3A-2		202117	4	X	6/16/81
3A-3		202118	1	X	2/09/78
5.1-1	5.1-1, Sh. 1	PID-1-RC-B20840	6		11/03/92
5.1-2	5.1-1, Sh. 2	PID-1-RC-B20845	15		11/04/09
5.1-3, Sh. 1	5.1-1, Sh. 3	PID-1-RC-B20841	23		10/13/12
5.1-3, Sh. 2	5.1-1, Sh. 4	PID-1-RC-B20842	13		3/31/11
5.1-3, Sh. 3	5.1-1, Sh. 5	PID-1-RC-B20843	17		10/04/12
5.1-3, Sh. 4	5.1-1, Sh. 6	PID-1-RC-B20844	18		2/26/07
5.1-4	5.1-1, Sh. 7	PID-1-RC-B20846	14		10/25/06
5.2-2, Sh. 1		1-NHY-500037-1	8		10/20/09
5.2-2, Sh. 2		1-NHY-500037-2	7		10/12/99
5.4-7, Sh. 1	5.4-7	1-NHY-503747	15		4/21/99
5.4-7, Sh. 2	5.4-8	1-NHY-503748	10		6/05/97
5.4-8	5.4-9	1-NHY-503764	9		11/10/89
5.4-9	5.4-10, Sh. 1	PID-1-RH-B20660	3		1/28/87
5.4-10	5.4-10, Sh. 2	PID-1-RH-B20662	24		10/12/12
5.4-11	5.4-10, Sh. 3	PID-1-RH-B20663	21		10/29/10
6.2-74	6.2-77	PID-1-CBS-B20233	38		10/09/15
6.2-75	6.2-78	1-NHY-804979	7		5/01/08
6.2-76	6.2-79	805146	5	X	12/14/90
6.2-77	6.2-80	805147	7	X	12/14/90
6.2-79		101486	8	X	12/14/90
6.2-92	6.2-95	PID-1-CGC-B20612	7		2/04/08
6.3-1	6.3-1, Sh. 1	PID-1-SI-B20445	4		5/01/08
6.3-2, Sh. 1	6.3-1, Sh. 2	PID-1-SI-B20448	11		5/01/08
6.3-2, Sh. 2	6.3-1, Sh. 3	PID-1-SI-B20449	10		6/30/11
6.3-3	6.3-1, Sh. 4	PID-1-SI-B20450	14		12/06/07
6.3-4	6.3-1, Sh. 5	PID-1-SI-B20446	18		10/29/10
6.3-5	6.3-1, Sh. 6	PID-1-SI-B20447	19		8/05/15
6.8-1	6.8-1, Sh. 1	PID-1-FW-B20685	4		11/22/06
6.8-2	6.8-1, Sh. 2	PID-1-FW-B20688	21		10/09/15
7.2-1	7.2-1, Sh. 1	1-NHY-509041	13		12/06/95
7.2-2	7.2-1, Sh. 2	1-NHY-509042	10		12/06/95
7.2-3	7.2-1, Sh. 3	1-NHY-509043	10		10/17/03
7.2-4	7.2-1, Sh. 4	1-NHY-509044	6		12/02/95
7.2-5, Sh. 1	7.2-1, Sh. 5	1-NHY-509045 Sh. 1	13		4/18/08
7.2-5, Sh. 2		1-NHY-509045 Sh. 2	1		4/18/08

UFSAR FIGURE NUMBER	PREVIOUS FSAR FIGURE NUMBER	DESIGN DRAWING NUMBER	DESIGN DRAWING REVISION NUMBER	HISTORICAL	DESIGN DRAWING REVISION DATE
7.2-6	7.2-1, Sh. 6	1-NHY-509046	7		9/20/00
7.2-7, Sh. 1	7.2-1, Sh. 7	1-NHY-509047 Sh. 1	11		12/10/95
7.2-7, Sh. 2		1-NHY-509047 Sh. 2	1		8/14/04
7.2-8	7.2-1, Sh. 8	1-NHY-509048	17		9/20/00
7.2-9	7.2-1, Sh. 9	1-NHY-509049	9		3/10/16
7.2-10	7.2-1, Sh. 10	1-NHY-509050	5		12/21/12
7.2-11	7.2-1, Sh. 11	1-NHY-509051	7		4/26/05
7.2-12	7.2-1, Sh. 12	1-NHY-509052	5		10/25/86
7.2-13, Sh. 1	7.2-1, Sh. 13	1-NHY-509053	13		4/21/08
7.2-13, Sh. 2	7.2-1, Sh. 14	1-NHY-509054	8		4/21/08
7.2-14	7.2-1, Sh. 15	1-NHY-509055	15		5/05/99
7.2-15	7.2-1, Sh. 16	1-NHY-509056	14		11/09/09
8.2-7		309826	1	X	4/11/78
8.2-8		1-NHY-309827	2	X	4/12/93
8.2-9, Sh. 1		309830	5	X	11/21/80
8.2-9, Sh. 2		309831	3	X	12/12/79
8.2-11		FP80034	20		10/26/16
8.3-1		1-NHY-310002	44		10/26/16
8.3-2		1-NHY-310041	19		4/13/17
8.3-4, Sh. 1		1-NHY-310043, Sh. 1	11		12/12/89
8.3-4, Sh. 2		1-NHY-310043, Sh. 2	2		4/13/17
8.3-5		1-NHY-310004	18		10/06/12
8.3-6		1-NHY-310005	19		5/27/14
8.3-7, Sh. 1		1-NHY-310009, Sh. 1	14		3/25/05
8.3-7, Sh. 2		1-NHY-310009, Sh. 2	2		7/27/07
8.3-8		1-NHY-310007	21		10/30/15
8.3-9		1-NHY-310008	19		10/30/15
8.3-10, Sh. 1		1-NHY-310010, Sh. 1	15		4/27/05
8.3-10, Sh. 2		1-NHY-310010, Sh. 2	4		4/19/05
8.3-11		1-NHY-310013	22		12/14/10
8.3-12		1-NHY-310051	16		10/30/15
8.3-13		1-NHY-310014	19		12/14/10
8.3-14		1-NHY-310052	20		10/30/15
8.3-15		1-NHY-301704	11		4/03/87
8.3-16		1-NHY-310023	23		10/30/13
8.3-17, Sh. 1		1-NHY-310024	31		6/15/17
8.3-17, Sh. 2		1-NHY-310057	16		10/30/13
8.3-18		1-NHY-301705	17		8/11/00
8.3-19		1-NHY-301104	15		5/30/07
8.3-20		1-NHY-310027	32		10/12/15
8.3-21		1-NHY-310028	14		4/19/17
8.3.22		1-NHY-310029	18		1/26/12

UFSAR FIGURE NUMBER	PREVIOUS FSAR FIGURE NUMBER	DESIGN DRAWING NUMBER	DESIGN DRAWING REVISION NUMBER	HISTORICAL	DESIGN DRAWING REVISION DATE
8.3-23, Sh. 1		1-NHY-310030	33		4/29/17
8.3-23, Sh. 2		1-NHY-310058	14		5/11/12
8.3-24		1-NHY-301105	11		5/11/12
8.3-25		1-NHY-310033	37		4/23/17
8.3-26		1-NHY-301706	12		5/11/12
8.3-27		1-NHY-310431	30	X	9/08/97
8.3-28		1-NHY-310105, Sh. E01a	12		9/15/99
8.3-29		1-NHY-310105, Sh. E02a	12		9/15/99
8.3-30		1-NHY-310105, Sh. E03a	12		9/15/99
8.3-31		1-NHY-310105, Sh. E04a	11		9/15/99
8.3-32		1-NHY-310105, Sh. EH9a	18		2/04/15
8.3-33		1-NHY-310105, Sh. EH0a	19		2/04/15
8.3-34		1-NHY-310105, Sh. E1Sa	18		10/24/14
8.3-35		1-NHY-310105, Sh. E1Ta	18		10/30/14
8.3-37, Sh. 1		1-NHY-310042, Sh. 1	18		4/1/17
8.3-37, Sh. 2		1-NHY-310042, Sh. 2	5		4/1/17
8.3-38, Sh. 1		1-NHY-310059, Sh. 1	10		2/17/98
8.3-38, Sh. 2		1-NHY-310059, Sh. 2	1		2/17/98
8.3-39		1-NHY-310107, Sh. E93a	12		4/01/99
8.3-40		1-NHY-310107, Sh. E87a	16		5/24/06
8.3-41		1-NHY-310107, Sh. E94a	16		4/01/99
8.3-42		1-NHY-310107, Sh. E88a	17		4/01/99
8.3-45		1-NHY-310890, Sh. B43a	11		3/20/91
8.3-46		1-NHY-310108, Sh. 5a	5		12/27/11
8.3-52, Sh. 1	8.3-54, Sh. 1	1-NHY-310032	36		4/19/17
8.3-52, Sh. 2	8.3-54, Sh. 2	1-NHY-310067	10		4/17/11
8.3-53, Sh. 1	8.3-55, Sh. 1	1-NHY-310026	43		3/29/16
8.3-53, Sh. 2	8.3-55, Sh. 2	1-NHY-310066	11		4/25/16
8.3-54	8.3-56	1-NHY-310046	25		1/18/17
8.3-56	8.3-58	1-NHY-300210	4	X	4/13/92
8.3-58	8.3-60	1-NHY-310107, Sh. EG1a	8		4/01/99
8.3-59	8.3-61	1-NHY-310107, Sh. EG2a	8		4/01/99
8.3-60		1-NHY-310107, Sh. E2Ta	12		3/27/06
8.3-61		1-NHY-310107, Sh. E2Ua	11		6/26/02
9.1-1	9.1-1, Sh. 1	PID-1-SF-B20480	6		3/27/97
9.1-2, Sh. 1	9.1-1, Sh. 2	PID-1-SF-B20482	15		10/29/15
9.1-2, Sh. 2	9.1-1, Sh. 3	PID-1-SF-B20483	16		2/6/14
9.1-2, Sh. 3	9.1-2	PID-1-SF-B20484	9		10/25/00
9.1-4		FP55944-1	9	X	7/16/91
9.1-5		FP55944-2	9	X	7/16/91
9.2-1	9.2-1, Sh. 1	PID-1-SW-B20792	6		4/23/08
9.2-2, Sh. 1	9.2-1, Sh. 2	PID-1-SW-B20794	38		4/16/17

UFSAR FIGURE NUMBER	PREVIOUS FSAR FIGURE NUMBER	DESIGN DRAWING NUMBER	DESIGN DRAWING REVISION NUMBER	HISTORICAL	DESIGN DRAWING REVISION DATE
9.2-2, Sh. 2	9.2-1, Sh. 3	PID-1-SW-B20795	44		4/16/17
9.2-2, Sh. 3		PID-1-SW-B20796	6		2/27/14
9.2-3	9.2-2, Sh. 1	PID-1-CC-B20204	4		6/06/97
9.2-4, Sh. 1	9.2-2, Sh. 2	PID-1-CC-B20205	27		7/11/17
9.2-4, Sh. 2	9.2-2, Sh. 3	PID-1-CC-B20206	16		1/26/10
9.2-4, Sh. 3	9.2-2, Sh. 4	PID-1-CC-B20207	12		2/04/08
9.2-4, Sh. 4	9.2-2, Sh. 5	PID-1-CC-B20208	3		4/02/92
9.2-5	9.2-3, Sh. 1	PID-1-CC-B20210	3		6/06/97
9.2-6, Sh. 1	9.2-3, Sh. 2	PID-1-CC-B20211	22		2/08/16
9.2-6, Sh. 2	9.2-3, Sh. 3	PID-1-CC-B20212	13		10/03/06
9.2-6, Sh. 3	9.2-3, Sh. 4	PID-1-CC-B20213	14		2/04/08
9.2-6, Sh. 4	9.2-3, Sh. 5	PID-1-CC-B20214	7		6/11/97
9.2-6, Sh. 5	9.2-3, Sh. 6	PID-1-CC-B20215	8		5/22/17
9.2-7	9.2-5, Sh. 1	PID-1-DM-B20348	5		4/20/05
9.2-9, Sh. 1	9.2-6, Sh. 1	PID-1-PW-B20914	2		1/26/01
9.2-9, Sh. 2	9.2-6, Sh. 2	PID-1-PW-B20915	3		9/16/99
9.2-11	9.2-8	PID-1-RMW-B20360	14		12/09/10
9.2-12	9.2-10	1-NHY-202499	9		11/05/03
9.2-13	9.2-11	PID-1-CC-B20209	13		10/12/12
9.2-15		PID-1-DM-B20349	35		12/29/16
9.3-1		PID-1-IA-B20636	4		11/16/10
9.3-2, Sh. 1		PID-1-IA-B20637	19		6/07/08
9.3-2, Sh. 2		PID-1-IA-B20638	15		10/29/10
9.3-2, Sh. 3		PID-1-IA-B20639	16		12/18/14
9.3-3	9.3-2, Sh. 4	PID-1-IA-B20640	16		2/16/17
9.3-4	9.3-2, Sh. 5	PID-1-IA-B20641	3		11/16/10
9.3-5	9.3-2, Sh. 6	PID-1-IA-B20643	14		10/1/13
9.3-6, Sh. 1	9.3-2, Sh. 7	PID-1-IA-B20644	18		11/16/10
9.3.6, Sh. 2	9.3.2, Sh. 8	PID-1-IA-B20645	14		1/23/06
9.3-6, Sh. 3	9.3-2, Sh. 9	PID-1-IA-B20646	19		3/18/09
9.3-6, Sh. 4		PID-1-IA-B20647	15		10/29/15
9.3-7	9.3-3	PID-1-SA-B20649	4		11/13/08
9.3-8	9.3-4, Sh. 1	PID-1-SA-B20650	38		11/14/16
9.3-9, Sh. 1	9.3-4, Sh. 2	PID-1-SA-B20651	16		11/14/16
9.3-9, Sh. 2	9.3-4, Sh. 3	PID-1-SA-B20652	8		7/21/09
9.3-9, Sh. 3	9.3-4, Sh. 4	PID-1-SA-B20653	10		1/13/11
9.3-10	9.3-5, Sh. 1	PID-1-SS-B20516	5		1/11/02
9.3-11	9.3-5, Sh. 2	PID-1-SS-B20518	12		9/12/02
9.3-12	9.3-5, Sh. 3	PID-1-SS-B20519	13		7/21/15
9.3-13	9.3-5, Sh. 4	PID-1-SS-B20521	19		12/29/16
9.3-14	9.3-5, Sh. 5	PID-1-SS-B20520	13		1/11/02
9.3-16	9.3-7, Sh. 1	PID-1-WLD-B20216	2		2/03/87

UFSAR FIGURE NUMBER	PREVIOUS FSAR FIGURE NUMBER	DESIGN DRAWING NUMBER	DESIGN DRAWING REVISION NUMBER	HISTORICAL	DESIGN DRAWING REVISION DATE
9.3-17	9.3-7, Sh. 2	PID-1-WLD-B20218	15		7/26/16
9.3-18	9.3-7, Sh. 3	PID-1-WLD-B20219	12		7/26/16
9.3-19	9.3-8	PID-1-WLD-B20220	6		3/27/97
9.3-20	9.3-9	PID-1-WLD-B20221	11		10/29/10
9.3-21, Sh. 1	9.3-10, Sh. 1	PID-1-WLD-B20222	21		7/26/16
9.3-21, Sh. 2	9.3-10, Sh. 2	PID-1-WLD-B20223	13		11/02/05
9.3-22	9.3-11	PID-1-WLD-B20224	8		7/26/16
9.3-23, Sh. 1	9.3-12, Sh. 1	PID-1-WLD-B20225	6		11/07/92
9.3-23, Sh. 2	9.3-12, Sh. 2	PID-1-WLD-B20226	7		3/17/09
9.3-23, Sh. 3	9.3-12, Sh. 3	PID-1-WLD-B20227	15		9/21/11
9.3-24	9.3-12, Sh. 4	PID-1-WLD-B20228	5		6/23/09
9.3-25	9.3-12, Sh. 5	PID-1-WLD-B20229	9		6/15/06
9.3-26	9.3-13, Sh. 1	PID-1-CS-B20720	4		11/02/00
9.3-27	9.3-13, Sh. 2	PID-1-CS-B20722	15		5/11/11
9.3-28	9.3-13, Sh. 3	PID-1-CS-B20723	20		8/04/08
9.3-29	9.3-13, Sh. 4	PID-1-CS-B20726	20		9/25/06
9.3-30	9.3-14	PID-1-CS-B20725	32		11/02/15
9.3-31, Sh. 1	9.3-15, Sh. 1	PID-1-CS-B20727	8		9/12/02
9.3-31, Sh. 2	9.3-15, Sh. 2	PID-1-CS-B20728	6		10/12/12
9.3-32	9.3-16	PID-1-CS-B20729	20		11/02/15
9.3-33	9.3-17	PID-1-CS-B20724	17		1/11/12
9.3-34	9.3-18, Sh. 1	PID-1-BRS-B20853	1		1/27/87
9.3-35	9.3-18, Sh. 2	PID-1-BRS-B20856	8		3/17/09
9.3-36	9.3-18, Sh. 3	PID-1-BRS-B20857	6		6/15/06
9.3-37, Sh. 1	9.3-19	PID-1-BRS-B20858	7		6/15/06
9.3-37, Sh. 2	9.3-20	PID-1-BRS-B20859	10		6/15/06
9.3-37, Sh. 3	9.3-21	PID-1-BRS-B20860	2		9/26/86
9.3-38	9.3-22	PID-1-BRS-B20861	12		2/26/15
9.3-39, Sh. 1	9.3-23	PID-1-BRS-B20854	9		9/18/07
9.3-39, Sh. 2	9.3-24	PID-1-BRS-B20855	11		6/02/11
9.3-40	9.3-25, Sh. 1	PID-1-VG-B20779	1		12/10/97
9.3-41	9.3-25, Sh. 2	PID-1-VG-B20780	22		1/27/17
9.3-42	9.3-25, Sh. 3	PID-1-VG-B20782	5		8/13/08
9.4-1	9.4-1, Sh. 1	PID-1-CBA-B20300	4		4/04/00
9.4-2	9.4-1, Sh. 2	PID-1-CBA-B20304	17		12/02/14
9.4-3	9.4-1, Sh. 3	PID-1-CBA-B20305	4		4/27/09
9.4-4	9.4-2	PID-1-MAH-B20497	10		7/23/12
9.4-5	9.4-3, Sh. 1	PID-1-MAH-B20492	2		8/06/92
9.4-6	9.4-3, Sh. 2	PID-1-MAH-B20494	18		6/09/99
9.4-7	9.4-3, Sh. 3	PID-1-MAH-B20495	18		10/31/11
9.4-8	9.4-3, Sh. 4	PID-1-MAH-B20496	12		5/07/08
9.4-9 Sh. 1		PID-1-MAH-B20493	0		8/06/92

UFSAR FIGURE NUMBER	PREVIOUS FSAR FIGURE NUMBER	DESIGN DRAWING NUMBER	DESIGN DRAWING REVISION NUMBER	HISTORICAL	DESIGN DRAWING REVISION DATE
9.4-9 Sh. 2	9.4-3, Sh. 5	PID-1-MAH-B20507	5		7/24/00
9.4-10	9.4-3, Sh. 6	PID-1-MAH-B20508	4		2/06/08
9.4-11, Sh. 1	9.4-4, Sh. 1	PID-1-MAH-B20498	6		5/05/09
9.4-11, Sh. 2	9.4-4, Sh. 2	PID-1-MAH-B20499	3		8/26/98
9.4-11, Sh. 3	9.4-4, Sh. 3	PID-1-MAH-B20500	4		4/09/87
9.4-11, Sh. 4	9.4-4, Sh. 4	PID-1-MAH-B20501	5		6/30/09
9.4-12	9.4-4, Sh. 5	PID-1-MAH-B20502	4		5/11/92
9.4-13, Sh. 1	9.4-5, Sh. 1	PID-1-MAH-B20505	9		7/21/11
9.4-13, Sh. 2	9.4-5, Sh. 2	PID-1-MAH-B20506	4		6/13/96
9.4-14	9.4-6	PID-1-MAH-B20504	28		10/18/10
9.4-15	9.4-7	PID-1-MAH-B20503	16		3/24/16
9.4-16	9.4-8, Sh. 1	PID-1-DAH-B20624	7		6/23/10
9.4-17, Sh. 1	9.4-8, Sh. 2	PID-1-HW-B20048	1		1/28/87
9.4-17, Sh. 2	9.4-8, Sh. 3	PID-1-HW-B20049	1		1/21/87
9.4-18	9.4-8, Sh. 4	PID-1-HW-B20053	6		7/22/04
9.4-19	9.4-9	PID-1-CBA-B20303	23		4/19/16
9.4-20	9.4-10	PID-1-CBA-B20302	4		1/08/99
9.4-21	9.4-11	PID-1-AAH-B20001	4		1/7/03
9.4-22	9.4-12	PID-1-CWA-B20240	3		9/16/97
9.4-23	9.4-13	PID-1-SWA-B20372	7		6/03/03
9.4-24, Sh. 1	9.4-14, Sh. 1	PID-1-TAH-B20170	16		1/19/17
9.4-24, Sh. 2	9.4-14, Sh. 2	PID-1-TAH-B20171	4		11/15/11
9.4-24, Sh. 3		PID-1-TAH-B20172	6		4/02/12
9.4-25		PID-1-CBA-B20309	6		5/02/00
9.5-1	9.5-1, Sh. 1	PID-1-FP-B20264	17		12/03/12
9.5-2	9.5-1, Sh. 2	PID-1-FP-B20271	21		1/29/08
9.5-4	9.5-1, Sh. 4	PID-1-FP-B20274	20		11/02/15
9.5-5	9.5-2, Sh. 1	PID-1-FP-B20266	25		8/13/15
9.5-6	9.5-2, Sh. 2	PID-1-FO-B20938	4		4/07/00
9.5-7, Sh. 1	9.5-3, Sh. 1	PID-1-FP-B20269	15		3/16/06
9.5-7, Sh. 2	9.5-3, Sh. 2	PID-1-FP-B20270	14		5/09/12
9.5-8	9.5-3, Sh. 3	PID-1-FP-B20268	16		3/15/12
9.5-9, Sh. 1	9.5-4, Sh. 1	PID-1-DG-B20456	4		8/14/15
9.5-9, Sh. 2	9.5-4, Sh. 2	PID-1-DG-B20457	4		8/06/15
9.5-10, Sh. 1	9.5-4, Sh. 3	PID-1-DG-B20459	17		8/14/15
9.5-10, Sh. 2	9.5-4, Sh. 4	PID-1-DG-B20464	19		8/06/15
9.5-11, Sh. 1	9.5-5, Sh. 1	PID-1-DG-B20461	22		10/07/12
9.5-11, Sh. 2	9.5-5, Sh. 2	PID-1-DG-B20466	22		3/28/13
9.5-12, Sh. 1	9.5-6, Sh. 1	PID-1-DG-B20460	25		10/07/12
9.5-12, Sh. 2	9.5-6, Sh. 2	PID-1-DG-B20465	25		3/28/13
9.5-13, Sh. 1	9.5-7, Sh. 1	PID-1-DG-B20458	17		12/13/11
9.5-13, Sh. 2	9.5-7, Sh. 2	PID-1-DG-B20463	20		2/01/11

UFSAR FIGURE NUMBER	PREVIOUS FSAR FIGURE NUMBER	DESIGN DRAWING NUMBER	DESIGN DRAWING REVISION NUMBER	HISTORICAL	DESIGN DRAWING REVISION DATE
9.5-14, Sh. 1	9.5-8, Sh. 1	PID-1-DG-B20462	6		11/21/06
9.5-14, Sh. 2	9.5-8, Sh. 2	PID-1-DG-B20467	8		11/21/06
10.1-1		1-NHY-202116	4	X	10/26/06
10.1-2		1-NHY-202115	2	X	10/26/06
10.2-1		PID-1-HG-B20888	14		6/28/17
10.3-1	10.3-1, Sh. 1	PID-1-MS-B20579	8		7/29/02
10.3-2, Sh. 1	10.3-1, Sh. 2	PID-1-MS-B20580	12		10/22/09
10.3-2, Sh. 2	10.3-1, Sh. 3	PID-1-MS-B20581	12		10/22/09
10.3-3	10.3-1, Sh. 4	PID-1-MS-B20582	21		10/29/15
10.3-4	10.3-1, Sh. 5	PID-1-MS-B20583	17		6/05/11
10.3-5	10.3-1, Sh. 6	PID-1-MS-B20584	10		11/01/09
10.3-6	10.3-1, Sh. 7	PID-1-MS-B20585	11		11/02/15
10.3-7	10.3-1, Sh. 8	PID-1-MS-B20586	4		12/04/95
10.3-8	10.3-2	PID-1-MS-B20587	17		11/04/06
10.3-9	10.3-3	PID-1-MS-B20588	5		10/11/03
10.3-10	10.3-4, Sh. 1	PID-1-EX-B20324	3		5/24/90
10.3-11	10.3-4, Sh. 2	PID-1-EX-B20328	6		5/28/97
10.4-1		PID-1-AR-B20744	28		4/29/17
10.4-2		PID-1-SSS-B20759	12		12/2/13
10.4-3	10.4-3, Sh. 1	PID-1-CW-B20672	5		11/02/15
10.4-4, Sh. 1	10.4-3, Sh. 2	PID-1-CW-B20673	25		4/21/17
10.4-4, Sh. 2	10.4-3, Sh. 3	PID-1-CW-B20674	6		3/27/06
10.4-5	10.4-3, Sh. 4	PID-1-CL-B20680	9		4/7/16
10.4-6	10.4-4, Sh. 1	PID-1-CO-B20420	4		4/20/05
10.4-7, Sh. 1	10.4-4, Sh. 2	PID-1-CO-B20422	19		3/11/13
10.4-7, Sh. 2	10.4-4, Sh. 3	PID-1-CO-B20423	16		12/29/16
10.4-7, Sh. 3	10.4-4, Sh. 4	PID-1-CO-B20424	5		6/09/97
10.4-7, Sh. 4	10.4-4, Sh. 5	PID-1-CO-B20425	11		4/13/14
10.4-7, Sh. 5	10.4-4, Sh. 6	PID-1-CO-B20426	31		10/11/15
10.4-8	10.4-5, Sh. 1	PID-1-FW-B20684	10		3/12/13
10.4-9, Sh. 1	10.4-5, Sh. 2	PID-1-FW-B20686	13		11/02/15
10.4-9, Sh. 2	10.4-5, Sh. 3	PID-1-FW-B20687	30		7/7/16
10.4-10	10.4-6, Sh. 1	PID-1-SB-B20625	4		10/30/03
10.4-11	10.4-6, Sh. 2	PID-1-SB-B20626	18		9/09/10
10.4-12, Sh. 1	10.4-7, Sh. 1	PID-1-SB-B20629	7		11/23/93
10.4-12, Sh. 2	10.4-7, Sh. 2	PID-1-SB-B20630	6		2/25/05
10.4-12, Sh. 3	10.4-7, Sh. 3	PID-1-SB-B20631	4		4/20/92
10.4-13, Sh. 1	10.4-8, Sh. 1	PID-1-SB-B20627	21		2/21/13
10.4-13, Sh. 2	10.4-8, Sh. 2	PID-1-SB-B20628	26		9/26/13
10.4-14	10.4-9	PID-1-SCC-B20072	10		7/23/07
10.4-15	10.4-10	PID-1-AB-B20012	4		11/20/01
10.4-16	10.4-11	PID-1-AS-B20564	7		4/07/05

UFSAR FIGURE NUMBER	PREVIOUS FSAR FIGURE NUMBER	DESIGN DRAWING NUMBER	DESIGN DRAWING REVISION NUMBER	HISTORICAL	DESIGN DRAWING REVISION DATE
10.4-17, Sh. 1	10.4-12, Sh. 1	PID-1-ASC-B20900	4		9/14/99
10.4-17, Sh. 2	10.4-12, Sh. 2	PID-1-ASC-B20901	5		9/14/99
10.4-18		PID-1-CPS-B20150	0		4/30/05
10.4-19		PID-1-CPS-B20152	5		3/28/14
11.2-1	11.2-1, Sh. 1	PID-1-WL-B20828	3		12/08/94
11.2-2	11.2-1, Sh. 2	PID-1-WL-B20829	10		6/15/06
11.2-3	11.2-2	PID-1-WL-B20830	7		12/07/92
11.2-4	11.2-3	PID-1-WL-B20831	18		9/16/10
11.3-1	11.3-1, Sh. 1	PID-1-WG-B20768	3		1/18/95
11.3-2, Sh. 1	11.3-1, Sh. 2	PID-1-WG-B20770	19		2/07/03
11.3-2, Sh. 2	11.3-1, Sh. 3	PID-1-WG-B20771	9		5/17/02
11.3-2, Sh. 3	11.3-1, Sh. 4	PID-1-WG-B20772	17		4/6/17
11.3-2, Sh. 4	11.3-1, Sh. 5	PID-1-WG-B20773	16		11/17/16
11.3-3	11.3-1, Sh. 6	PID-1-NG-B20132	4		6/23/99
11.3-4	11.3-1, Sh. 7	PID-1-NG-B20135	14		9/18/07
11.4-1, Sh. 1		PID-1-WS-B20733	2		8/19/92
11.4-1, Sh. 2		PID-1-WS-B20734	1		2/02/87
11.4-2	11.4-1, Sh. 3	PID-1-WS-B20735	9		9/28/94
11.4-3	11.4-1, Sh. 4	PID-1-WS-B20736	7		7/22/15
11.4-4	11.4-1, Sh. 5	PID-1-WS-B20737	3		11/21/86
11.4-5	11.4-1, Sh. 6	PID-1-WS-B20738	3		11/06/86
11.4-6	11.4-1, Sh. 7	PID-1-WS-B20739	4		9/16/03
11.4-7	11.4-1, Sh. 8	PID-1-WS-B20740	1		11/18/86
11.4-8	11.4-1, Sh. 9	PID-1-WS-B20741	6		11/30/01
11.4-9	11.4-1, Sh. 10	PID-1-WS-B20742	4		5/22/17
11.4-10	11.4-2	PID-1-RS-B20252	13		1/14/04
11.5-1		1-NHY-500015	14		3/17/09
12.3-1		805184	0	X	8/12/82
12.3-2		805185	0	X	8/12/82
12.3-3		805186	1	X	11/19/03
12.3-4		805187	1	X	8/30/82
12.3-5		805188	0	X	8/12/82
12.3-6		805189	0	X	8/12/82
12.3-7		805190	0	X	8/12/82
12.3-8		805896	1	X	5/19/86
12.3-9		805891	2	X	9/30/02
12.3-10		1-NHY-805892	2	X	4/13/92
12.3-11	12.3-10a	805897	0	X	5/19/86
12.3-12	12.3-11	1-NHY-805893	3	X	4/13/92
12.3-13	12.3-12	805894	1	X	8/30/82
12.3-14	12.3-13	805895	1	X	5/19/86
12.3-15	12.3-14	805181	0	X	8/12/82

UFSAR FIGURE NUMBER	PREVIOUS FSAR FIGURE NUMBER	DESIGN DRAWING NUMBER	DESIGN DRAWING REVISION NUMBER	HISTORICAL	DESIGN DRAWING REVISION DATE
12.3-16	12.3-15	805182	0	X	8/12/82
12.3-17	12.3-16	1-NHY-805183	1	X	4/13/92
12.3-19, Sh. 1	12.3-18, Sh. 1	1-NHY-500017, Sh. 1	16		10/21/09
12.3-19, Sh. 2	12.3-18, Sh. 2	1-NHY-500017, Sh. 2	3		9/30/03
12.3-20, Sh. 1	12.3-19, Sh. 1	1-NHY-500016, Sh. 1	15		10/20/09
12.3-20, Sh. 2	12.3-19, Sh. 2	1-NHY-500016, Sh. 2	4		4/23/96
13.5-1		1-NHY-500090	22	X	4/23/96

TABLE 1.3-1 DESIGN COMPARISON

Chapter Title System/Component	FSAR Reference Section	Significant Similarities	Significant Differences
Containment	3.8, 6.2.1	Comanche Peak, Byron/Braidwood, except as noted	Comanche Peak and Byron/Braidwood do not have containment enclosures. Byron/Braidwood containment has a shallow dome roof and is post-tensioned in three directions. McGuire utilizes the ice condenser containment concept.
Reactor Vessel			
Internals	3.9.5	McGuire, Comanche Peak, Byron/ Braidwood, except as noted	McGuire upper internals incorporate upper head injection (UHI) system.
Reactor			
Fuel System	4.2	McGuire, Comanche Peak, Byron/ Braidwood	None
Nuclear Design	4.3	McGuire, Comanche Peak, Byron/ Braidwood	McGuire and Comanche Peak have OFA and B_4C control rods. Comanche Peak has a different number of rods.
Thermal and Hydraulic Design	4.4	McGuire, Comanche Peak, Byron/Braidwood, except as noted	Byron/Braidwood thermal and hydraulic parameters differ due to incorporation of loop stop valves.

Chapter Title System/Component	FSAR Reference Section	Significant Similarities	Significant Differences
Reactivity Control Systems	4.6	McGuire, Comanche Peak, Byron/	The McGuire system includes part-
		Braidwood, except as noted	length control rods.
Reactor Coolant System and Connected Systems	5.1, 5.2	McGuire, Comanche Peak, Byron/ Braidwood	None
Reactor Vessel	5.3	McGuire, Comanche Peak, Byron/ Braidwood, except as noted	McGuire vessel head incorporates UHI penetrations
Reactor Coolant Pumps	5.4.1	McGuire, Comanche Peak, Byron/ Braidwood	The Seabrook reactor coolant pumps have a slightly higher capacity.
Steam Generators	5.4.2	McGuire, Comanche Peak, Byron/ Braidwood, except as noted	Seabrook has Westinghouse Model F steam generators. This design does not include a feedwater pre-heater section, and incorporates improved design features to mitigate steam generator tube degradation.
Reactor Coolant Piping	5.4.3	McGuire, Comanche Peak, Byron/ Braidwood, except as noted	McGuire incorporates UHI piping. Byron/Braidwood has loop stop valves
Residual Heat Removal System	5.4.7	McGuire, Comanche Peak, Byron/ Braidwood, except as noted	McGuire has only one RHR suction line from the Reactor Coolant System. Cooldown time is longer for Seabrook due to lower heat exchanger capacity.
Pressurizer	5.4.10	McGuire, Comanche Peak, Byron/ Braidwood	None

Chapter Title **System/Component**	**FSAR Reference Section**	**Significant Similarities**	**Significant Differences**
Engineered Safety Features			
Containment Heat Removal Systems	6.2.2	Comanche Peak, Byron/Braidwood except as noted	Comanche Peak and Byron/Braidwood use eductors rather than gravity feed to add containment spray additives. Byron/Braidwood has ESF containment fan coolers.
Containment Isolation System	6.2.4	Comanche Peak, Byron/Braidwood	None
Combustible Gas Control in Containment	6.2.5	Comanche Peak, Byron/Braidwood except as noted	Byron/Braidwood hydrogen recombiners are shared between units and are located in the Auxiliary Building.
Emergency Core Cooling System	6.3	Comanche Peak, Byron/Braidwood	None
Control Room Habitability System	6.4	McGuire, Comanche Peak, Byron/ Braidwood except as noted	McGuire, Comanche Peak and Byron/ Braidwood have common control rooms. Seabrook has one control room per unit.

Chapter Title **System/Component**	**FSAR Reference Section**	**Significant Similarities**	**Significant Differences**
Emergency Feedwater System	6.8	McGuire, Comanche Peak, except as noted	McGuire and Comanche Peak have two motor-driven pumps in their Auxiliary Feedwater System, each feeding two steam generators, and one turbine-driven pump which feeds all four steam generators. Seabrook has one motor-driven pump and one turbine-driven pump, each of which can feed all four steam generators.
Instrumentation and Controls			
Reactor Trip System	7.2	System functions are similar to McGuire, Comanche Peak and Byron/Braidwood	None
Engineered Safety Feature Systems	7.3	System functions are similar to McGuire, Comanche Peak and Byron/Braidwood, except as noted	Fan coolers perform an ESF function at Byron/Braidwood
Systems Required for Safe Shutdown	7.4	System functions are similar to McGuire, Comanche Peak and Byron/Braidwood	None
Safety-Related Display Instrumentation	7.5	Parametric display is similar to McGuire, Comanche Peak and Byron/Braidwood	Actual physical configuration may differ due to applicant design philosophy.

Chapter Title **System/Component**	**FSAR Reference Section**	**Significant Similarities**	**Significant Differences**
All Other Instrumentation Systems Required for Safety	7.6	Operational functions are similar to McGuire, Comanche Peak and Byron/Braidwood	Byron/Braidwood uses loop stop valve interlocks.
Control Systems Not Required for Safety	7.7	Operational functions are similar to McGuire, Comanche Peak and Byron/Braidwood	McGuire has a net load rejection capability of 100% rather than 50% Seabrook has a fixed incore flux monitoring system versus a moveable system for the other plants.
Electric Power			
Offsite Power System	8.2	McGuire, except as noted	McGuire has an outdoor 230 kV switch- yard for Unit 1 and an outdoor 525 kV switchyard for Unit 2, with the two switchyards connected by an auto-transformer; Seabrook has a 345 kV switchyard common to both units. The switchyard is of the metal-enclosed, gas insulated type (SF6).

Chapter Title **System/Component**	**FSAR Reference Section**	**Significant Similarities**	**Significant Differences**
Onsite AC Power System	8.3.1	McGuire and Comanche Peak, except as noted	McGuire utilizes two full-size unit auxiliary transformers, each run t half-capacity to supply the onsite distribution system; each Seabrook unit has 2 unit auxiliary transformers and 2 reserve auxiliary transformers. Comanche Peak has direct connection of the generator to the stepup trans-formers; Seabrook utilizes a generator breaker for this connection. McGuire connects the ESF buses to the RATs and UATs through the 6.9 kV station buses; Seabrook has direct connections to the RAT and UAT. McGuire's diesel generators have a rating of 4000 kW @4.16 kV; Comanche Peak's diesel generators have a rating of 7000 kW @6.9 kV; Seabrook diesel generators have a rating of 6083 kW @4.16 kV. McGuire has the capability to manually connect ESF buses between units; Seabrook does not. McGuire has one cable spreading room for both units; Seabrook has an independent cable spreading room for each unit. McGuire has 18 inch horizontal and vertical separation of redundant safety-related cable; Seabrook separation is 3 feet horizontal and 5 feet vertical in general areas and 1 foot horizontal and 3 feet vertical in the cable-spreading room.

Chapter Title **System/Component**	**FSAR Reference Section**	**Significant Similarities**	**Significant Differences**
Onsite DC Power System	8.3.2	McGuire and Comanche Peak, except as noted.	Seabrook uses four 1E batteries (2 for A train and 2 for B train) for safety-related loads. The four-channel associated UPS units are powered from four separate 1E batteries. Comanche Peak uses two 1E batteries. McGuire and Comanche Peak use 250V DC and 125V DC Systems for nonsafety-related loads; Seabrook uses two 125V DC batteries for nonsafety-related loads.
Auxiliary Systems			
New Fuel Storage	9.1.1	Comanche Peak, except as noted.	Comanche Peak has a common new fuel storage area.
Spent Fuel Storage	9.1.2	Comanche Peak, except as noted	Comanche Peak has two identical spent fuel pools which are common to both units. Seabrook has separate fuel storage facilities for each unit.
Spent Fuel Pool Cooling and Clean-up System	9.1.3	Comanche Peak, except as noted	Comanche Peak has two cross-connected loops which service the two common spent fuel pools. Seabrook has a separate system for each unit.

Chapter Title **System/Component**	**FSAR Reference Section**	**Significant Similarities**	**Significant Differences**
Station Service Water System	9.2.1	McGuire, Comanche Peak, Byron/ Braidwood, except as noted	McGuire and Byron/Braidwood each have essential and non-essential loops. Each unit of the Seabrook system is divided into two independent flow loops, each supplied by four 100% (for the loop) capacity pumps, as opposed to two 100% capacity pumps. The ultimate heat sink is site-related.
Cooling System for Reactor Auxiliaries (Primary Component Cooling Water System)	9.2.2	McGuire, Comanche Peak, except as noted	The Comanche Peak system is shared between units, with cross-connections between the subsystems serving each unit. Seabrook has a separate system for each unit. McGuire utilizes 4-50% capacity pumps supplying a single flow loop for each unit. Each unit of the Seabrook system is divided into two independent flow loops, each supplied by four 100% (for the loop) capacity pumps, as opposed to two 100% capacity pumps.
Chemical and Volume Control System	9.3.4	McGuire, Comanche Peak, Byron/ Braidwood, except as noted	Seabrook utilizes degassing of letdown fluid to the volume control tank (as necessary)
Boron Recovery System	9.3.5	Similar in principle to McGuire, Comanche Peak, Byron/Braidwood	The Seabrook system incorporates degassing prior to processing

Chapter Title **System/Component**	**FSAR Reference Section**	**Significant Similarities**	**Significant Differences**
Radioactive Waste Management			
Liquid Waste Management Systems	11.2	Similar in principle to McGuire, Comanche Peak	Comanche Peak incorporates a reverse osmosis system to process laundry and hot shower waste.
Gaseous Waste Management System	11.3		McGuire and Comanche Peak systems incorporate hydrogen recombiners and hold wastes in gas decay tanks. Seabrook has charcoal bed absorbers for radioactive gas decay and gas recycling.
Solid Waste Management System	11.4	Functionally similar to McGuire, Comanche Peak, Byron/Braidwood	Seabrook has an asphalt encapsulation system which could be used to solidify waste prior to shipment off site for burial.
Process and Effluent Radiological Monitoring and Sampling Systems	11.5	Functionally similar to McGuire, Comanche Peak, Byron/Braidwood	None

TABLE 1.3-2 SIGNIFICANT DESIGN CHANGES FROM PSAR TO FSAR

Item	FSAR Change	Reasons For Change	Reference Section
Site Characteristics			
Snowload	Basic design snowload value (on ground) decreased from 74 to 66 psf. "Unusual" snowload value increased from 108 to 126 psf.	Snowload values redefined based on revised criteria for determining these values presented in Regulatory 1.70, Rev. 3.	2.3, 2.4.2.3
Groundwater Use	Onsite groundwater wells are being utilized.	Town of Seabrook decided not to supply 100% of station needs.	2.4.13
Design of Structures Components, Equipment and Systems			
Wind Loading	ANSI A58.1-1972, "Building Code Requirements for Minimum Design Loads on Buildings and Other Structures" used instead of ASCE Paper #3269, "Wind Forces on Structures," for all structures except for Enclosure Bldg.	ANSI is a complete design standard which addresses the material in greater detail than the ASCE paper.	3.3.1, 3.3.2
Design Basis Tornado	Maximum tangential velocity Changed from 300 mph to 290 mph. Maximum translational velocity changed from 60 mph to 70 mph.	Change was made to comply with Regulatory Guide 1.76.	3.3.2
Circulating Water Pump House	Deleted from list of Category I structures.	Not safety-related.	3.2
Tornado Generated Missiles	Revised penetration into 24" wall by missiles.	NRC permits use of lower value of K = 0.0035 in the modified Petri formula	3.5.3
Procedure for Combining Modal Responses in Seismic Analysis	Formula shown in PSAR for closely spaced modal changed.	To conform to formula given in Regulatory Guide 1.92	3.7.3

Item	FSAR Change	Reasons For Change	Reference Section
Seismic Monitoring System	Location of detectors changed from bottom of reactor vessel to the reactor vessel support.	Most accessible location, removed from high temperature and measures the appropriate acceleration.	3.7.4
Containment Structure	Load table revised to incorporate design basis flood load combination and the notation and factored load conditions of ASME, Section III, Div., 2 Jan. 1975.	Incorporate design basis flood effects and load combinations of ASME Sect. III, Div. 2, Jan. 1975.	3.8.1
Containment Analyses	Complete fixity at base was changed to unrestrained radial displacement.	The entire mat was modeled in the axisymmetric analysis, and this change allows for some mat deformation.	3.8.1.4
Range of Variation in Material Properties	Variations not considered.	Spreading of peaks on response spectra and use of allowables in ASME B&PV Code, Div. 2, account for uncertainties in material properties.	3.8.1.4, 3.8.3.4, 3.8.4.4, 3.8.5.4
Cadweld Splices	Cadweld splices were permitted in all seismic Category I structures, instead of only the Containment.	This will reduce congestion in areas of high rebar density.	3.8.3.6, 3.8.4.6, 3.8.5.6
Reactor Cavity Neutron Shield	New structure added over reactor cavity.	To reduce neutron streaming on operating floor.	3.8.3, 12.3
Support on Engineered Backfill	Safety-related electrical duct banks and certain manholes are supported on engineered fill instead of rock.	This was the original intent for duct banks. Manholes on fill are located above service water pipes which are in fill.	3.8.5, 2.5.4
Radiation Dose Environment	Increased environmental radiation doses inside Containment after a LOCA.	Compliance with Regulatory Guide 1.89.	3.11
Containment Environmental Qualification Temperature	Peak temperature and duration of the Containment temperature following a design basis event have been changed to higher values.	Results from final analysis for all main steam line break accidents.	3.11

Item	FSAR Change	Reasons For Change	Reference Section
Rod Cluster Control Assemblies	Increase the number of control rods from 53 to 57.	Increase shutdown capability. .	4.0
	Delete part length control rods, incorporate reduced T_{avg} control, and change D bank from 9 rods to 5 rods.	Provide improved power distribution control during load follow operations; comply with regulatory restrictions on use of part length rods	4.0, 7.7
Reactor Coolant System			
Overpressure Protection	Incorporate reactor coolant system cold overpressurization prevention.	Provide for the mitigation of potential reactor coolant system cold overpressurization transients, utilizing existing power-operated relief valves with modification to their actuation logic.	5.2.2, 7.6
Safety Valve Flow Monitoring System	Added an Acoustic Accelerometer System.	To detect flow from safety valves.	5.2.5
Containment Drainage Sump	Deleted level indication and added level recording at MCB.	To meet requirements of Regulatory Guide 1.45.	5.2.5
Reactor Vessel	Provided capability to vent reactor vessel.	Reduce possible H_2 concentration in RV following a LOCA.	5.3
	Baffle to barrel region configuration has been changed from downflow to upflow.	Reduce baffle plate and baffle bolt loading and minimize the potential for excessive baffle joint jetting.	5.3, 15.6.5
Reactor Coolant Pump	Change to Model 93A1 reactor coolant pump.	Increase the reliability of the reactor coolant pump.	5.4.1, 5.1
Steam Generator	Change from Model D to Model F.	Increase the reliability of the steam generator.	5.4.2

Item	FSAR Change	Reasons For Change	Reference Section
Reactor Coolant Piping	Thermal sleeves in the reactor coolant loop branch nozzles have been deleted, except as noted in Subsection 5.4.3.2.	Simplify the nozzle design, and show technical improvement.	5.4.3
RCS Main Loop Pipe Break Criteria	Postulated pipe breaks in the main loop piping have been deleted from the design basis when considering the dynamic effects of these breaks. RCS main loop supports and restraints are deleted.	Final Rule Modifying GDC-4, issued October 27, 1987	3.1, 3.6, 3.8 3.9, 5.4, 6.2
Main Steamline Isolation	Steamline to each steam generator has a single MSIV rather than a stop valve and a check valve.	The MSIVs are designed for bidirectional flow; thus check valves are not required.	5.4.5, 10.3
	MSIV actuation is pneumatic/hydraulic in lieu of air-piston.	As purchased	5.4.5, 10.3
Residual Heat Removal System Interlocks	Interlocks have been revised to reflect an auto-closure setpoint on increasing reactor coolant system pressure greater than 750 psig.	Allow full relief valve potential and preclude premature isolation of the Reactor Coolant System low pressure relief protection.	5.4.7
Engineered Safety Features			
Containment	Design pressure increased from 50.7 to 52 psig.	Increase design margin.	6.2,
Containment Spray System	Increase volume of refueling water storage tank from 375,000 gal to 475,000 gal and spray additive tank from 8400 gal to 10,700 gal.	Provide greater margin for manual transfer of ECCS pumps to recirculation mode.	6.2.2
Hydrogen Recombiners	Provide two thermal recombiners (100 scfm) inside each containment, instead of two catalytic-type recombiners (50 scfm) external to containment and shared between units.	Final design evaluation.	6.2.5

Item	FSAR Change	Reasons For Change	Reference Section
Control Room Static Pressure Control	Control room will be kept 0.25" w.g. above atmospheric pressure. The mechanical equipment room and the cable spreading area will be kept slightly above atmospheric pressure.	Added protection against infiltration.	6.4.1, 9.4.1
Unit 2 Control Room Air Intake Structure	Relocated approx. 350 feet from center of Unit 2 Containment.	To reposition the perimeter fence	6.4.1
Control Room Makeup Air System	Each control room draws air from either or both intakes.	Allow for purging of contaminated inlet.	6.4.1
	Makeup air intake changed to vault design to house monitoring equipment.	Protection against elements.	6.4.1
	Unit makeup air fans controlled from unit control room only.	Prevent operators from one unit controlling makeup air supply to other unit control room.	6.4.1
Control Room HVAC System	Controls for the air conditioning equipment are located in the HVAC equipment room.	Allow local operation of HVAC equipment while observing performance of the equipment from the control room complex.	6.4.1
Containment Enclosure Emergency Exhaust Filter System	Both filter trains start automatically in the unlikely event of an accident requiring filter operation.	Conform to single failure criteria.	6.5.1
Emergency Feedwater System	A run-out protection system has been added.	Assure continued availability of emergency feedwater to intact steam generators, given a single failure, following a main feedline break.	6.8
	Add manual sectioning valves in common pump discharge header.	Provide capability for isolation of header sections.	6.8
	Emergency feedwater stop check valves are manually operated rather than motor-operated.	Increase reliability.	6.8

Item	FSAR Change	Reasons For Change	Reference Section
Instrumentation and Controls			
Reactor Trip System	Eliminate low feedwater flow reactor trip.	Increase plant availability.	7.2
	Delete reactor trip following turbine trip below 20 percent power.	Increase plant availability.	7.2
	Deletion of reactor trip from reactor coolant pump breaker trip.	Replaced with undervoltage and underfrequency sensors on load side of breakers which are located in a seismic Category I structure.	7.2
High Energy Line Break Sensing System	Added redundant safety grade instrumentation to sense and isolate high energy lines in PAB and containment enclosure areas.	To mitigate the effects of harsh environmental conditions generated by HELB on safety-related equipment.	7.7.3, 7.6.10, 9.3.4.5, 10.4.8.6a, 10.4.11.5
Reactor Vessel Level Instrumentation System	Added redundant safety grade instrumentation to monitor the reactor vessel level or relative void content of the primary coolant system fluid.	To meet the requirements of NUREG-0737.	1.9
ESF Actuation System	An improved Steam Line Break Protection System has been incorporated.	Increase plant availability by preventing spurious safety injection Actuation.	7.3
	Containment pressure setpoints for closure of main steam and feedwater isolation valves revised to coincide with Phase A isolation.	To improve station availability.	7.3
	Initiation of recirculation and subsequent valve alignment for containment spray system changed from manual to automatic.	To improve reliability.	7.3, 7.6
Remote Shutdown Panels	Several additional instrumentation and control channels added.	Expand shutdown capability from outside the control room.	7.4

Item	FSAR Change	Reasons For Change	Reference Section
RWST Instrumentation	Range of recirculation actuation channels has been revised.	Meet accuracy requirements.	7.5, 6.3.5
Post-Accident Hydrogen Control System	Added a Class 1E hydrogen analyzer on a per train basis.	To measure hydrogen concentration from 0 to 10/20 percent.	7.5
Reactor Coolant Loops	Added two temperature differential recorders on front on MCB.	To record hot-leg-minus cold-leg temperature differential on two loops.	7.5
Containment Pressure Instrumentation	Upgraded to provide redundant safety grade instrumentation from -5 psi to +5 psi and from zero to 3 times design pressure.	To meet ACRS recommendations and Regulatory Guide 1.97 requirements for post-accident monitoring.	7.5
Containment Sump	Added redundant safety grade instrumentation to measure containment sump level up to 600,000 gallons.	To meet TMI requirements for post- accident monitoring.	7.5
Reactor Coolant Instrumentation	Added a safety grade thermal margin (saturation) calculator, with indication on MCB.	To show pressure temperature safety margin for alerting the operator of possible pending reactor coolant flashing.	7.5
Steam Dump System	Reactor trip signal (P4) is used instead of turbine trip signal (C8) in Steam Dump Control System.	To improve system performance.	7.7, 10.4.4
Incore Flux Monitoring System	Change from moveable only system to fixed system (including incore thermocouples).	Increase flux monitoring.	7.7 4.0
Electric Power			
In-Plant Distribution System	Additions and deletions of equipment made to 13.8 kV, 4.16 kV and 480V systems.	To accommodate design improvements and provide for load growth.	8.3.1 (Figure 8.3-1)
120V AC Vital Instrument Power	Added two Class 1E uninterruptible power supplies.	Increase diversity and reliability of the system.	8.3.1

Item	FSAR Change	Reasons For Change	Reference Section
Standby Power Supply	Increased diesel-generator rating from 5500 kW to 6083 kW.	Provide additional margin for future load growth.	8.3.1
Standby Power Supply Acceptance Tests	Changed testing program to conform to IEEE-387.	Compliance with latest requirements.	8.3.1
Excore Flux Monitoring System	Added Class 1E system for monitoring reactivity during operation and after remote safe shutdown.	To meet the requirements of Regulatory Guide 1.97 and NUREG-0737.	7.4 (Table 7.4-1) 7.5
Standby Power Supply Protective Devices	Low lube oil pressure has been added to those D-G trips which are never bypassed in any mode of operation. To minimize the possibility of a spurious trip, multiple low lube oil signals are conditioned by a logic circuit. Low lube oil pressure is alarmed prior to trip.	Since loss of lube oil results in eventual major failure of the equipment, a reliable trip signal provides a means of initiating repair to the lubricating system before major failures occur.	8.3.1
Raceways	Allowable fill in raceways containing 480 volt medium and small size power cables has been increased from 30 to 40 percent by volume.	Previous criteria overly conservative.	8.3.1
DC Power System	Two additional station batteries added to supply the major nonvital loads, such as the turbine related DC motors.	Provide increased capacity on safety- related DC buses, and eliminate large nonsafety-related motor loads from safety-related buses.	8.3.2
Auxiliary Systems			
Spent Fuel Storage	Storage capacity increased from 1 1/3 cores to 1236 assemblies.	Increase storage capacity.	9.1.2
Fuel Handling	Fuel Storage Building maintained at a negative pressure, and all exhaust air is filtered prior to discharge whenever irradiated fuel is handled outside the shipping cask.	To meet the requirements of Regulatory Guide 1.13 and Regulatory 1.25.	9.1.2

Item	FSAR Change	Reasons For Change	Reference Section
Spent Fuel Pool Cooling and Cleanup System	Additional spent fuel pool heat ex- changer included in system.	Increase thermal capacity to accommodate a full spent fuel pool, including a full core offload.	9.1.3
Primary Component Cooling Water (PCCW) System	Delete loop cross-connection at spent fuel pool heat exchanger.	A second spent fuel pool heat ex- changer has been added.	9.2.2
	Added redundant loop of safety class to RCP thermal barriers.	To provide more reliability with respect to RCP seal cooling.	9.2.2
PCCW Head Tank Relief and Vent Line with Automatic Isolation	Replaced with an overflow to the floor drain tanks which are vented to the aerated vent system.	To accommodate increases in PCCW inventory due to tube leakage into the PCCW system, while protecting against overpressurization.	9.2.2
Demineralized Water Makeup System	Add Waste Processing Building equipment as loads for initial fill and maintenance flushing.	Equipment loads transferred from Reactor Makeup Water System to reduce tritium exposure to plant personnel during maintenance.	9.2.3
Makeup Demineralizer Train	Access is provided to water from the fire water storage tanks.	Backup to normal city water supply.	
Potable and Sanitary Water System	Potable Water System supplies makeup to fire water tanks, demineralizer system and cooling tower.	Potable Water System usage expanded.	9.2.4
	Added water supply from onsite wells and offsite Hampton Falls wells.	Increase reliability of potable water supply.	9.2.4, 2.4.13
Ultimate Heat Sink	Delete considerations of available time for transfer to cooling tower (manually).	Transfer to cooling tower effected automatically.	9.2.5

Item	FSAR Change	Reasons For Change	Reference Section
	Tower actuation channel sensors changed to measure pressure in the Service Water System instead of level in the forebay.	To improve system reliability.	9.2.5
	Tower missile protection.	Update design to missile protect service water piping only.	9.2.5
	Add changes to reflect use of tower for tunnel heat treatment.	Additional function of cooling tower.	9.2.5
Condensate Storage Tank	Change material from aluminum to stainless steel and added floating cover.	Reduce cost and maintain better water quality by minimizing O_2 absorption.	9.2.6
Instrument Air System	Two of the three air system compressors are powered from the diesel generators in addition to the non-1E bus.	Provide flexibility for loss of offsite power operation.	9.3.1
Compressed Air System	Added redundant instrument air header.	Enhance reliability.	9.3.1
Process Sampling Systems	Added primary coolant sampling capability.	Provide prompt sample of reactor coolant under high radioactivity conditions.	9.3.2
Gross Failed Fuel Detector Package	Deleted; sample system piping rearranged to accommodate the deletion.	Failed fuel detection is provided by the reactor coolant letdown gross activity monitor in the sample line from the letdown heat exchanger outlet.	9.3.2
Chemical and Volume Control System	Eliminate number 1 seal bypass on the reactor coolant pumps.	In the pump design, seal injection is physically above the main radial bearing, and the seal bypass function is no longer required to maintain bearing cooling.	9.3.4

Item	FSAR Change	Reasons For Change	Reference Section
	Letdown degasifier changed from Safety Class 3 to NNS.	Quality was downgraded because accidental releases were within acceptable limits of Regulatory Guide 1.26.	
Boron Recovery System (BRS)	BRS evaporator non-condensible gases are vented to the aerated vent header, not the Radioactive Gaseous Waste System.	All radioactive liquids entering BRS have been degasified.	9.3.5
Control Room Air Conditioning System	Add bypass damper from supply air duct to HVAC equipment room.	Allow operation of both air conditioning systems without over-cooling the control room.	9.4.1
	Additional air conditioning equipment provided for computer room cooling.	To maintain lower temperature conditions for computer equipment	9.4.1
Fuel Storage Building Normal Exhaust System	Normal exhaust fan added.	Reduce negative pressures required of PAB exhaust fans.	9.4.2
Fuel Storage Building Ventilation Supply System	Modulating supply air dampers added.	Enhances control of negative pressure required during fuel handling and emergency operating mode.	9.4.2
Primary Auxiliary Building Supply Air System	Supply ducts are not installed into potentially contaminated areas. Backdraft dampers are installed on transfer openings.	Spare supply fan and a spare exhaust fan are provided to maintain system balance.	9.4.3
Waste Processing Building Exhaust System	Potentially contaminated areas exhausted through HEPA filters.	Maintain offsite doses as low as reasonably achievable.	9.4.4
	Exhaust booster fans added.	Reduce negative pressure required of main exhaust fans.	9.4.4
	Emergency exhaust fan added for hydrogen surge tank area.	Eliminate possibility of hydrogen gas accumulation in event of a hydrogen leak.	9.4.4

Item	FSAR Change	Reasons For Change	Reference Section
Waste Solidification System	Changed from a polymer-based to an asphalt-based system.	To meet Regulatory Guide 1.143 requirements.	11.4
Waste Processing Building Ventilation System	Ventilation systems added for boron waste tank, refueling water storage tank, and reactor makeup water storage tank areas.	Maintain upper temperature limit for tank areas.	9.4.4
Waste Processing Building Air Conditioning System	Air conditioning system added for ambient carbon delay bed areas.	Increase efficiency of ambient carbon delay beds.	9.4.4
Containment Purge Systems	Added Containment Online Purge System.	Decreases size of open containment penetrations during reactor operation and allow purging during reactor operation.	9.4.5
Containment Enclosure Cooling System	Ductwork is partially not redundant.	Passive component. Redundancy not required except where a single event could affect redundant cooling system.	9.4.6
Electrical Penetration Area Air Conditioning System	Add air conditioning system.	Required to maintain proper environment for equipment during normal operation.	9.4.7
Diesel Generator Building Ventilation System	Delete return and exhaust dampers.	Prevent smoke and heat from affecting redundant diesel generators.	9.4.8
Cable Spreading Area Ventilation System	Control of ventilating fans will be local at MCC.	Eliminate routing of control cables through the cable spreading area in accordance with BTP 9.5-1.	9.4.9
Switchgear Room Ventilation System	Each switchgear room has a single supply fan, a single return fan, and a single duct system.	Switchgear rooms are redundant.	9.4.10
Emergency Feedwater Pump House Heating and Ventilating System	Add Heating and Ventilating System.	Required to maintain proper environment for equipment.	9.4.11

Item	FSAR Change	Reasons For Change	Reference Section
Service Building RCA Area Air Conditioning	Air conditioning unit uses 100% outside air.	Enhances control of negative pressures and air flow pattern between areas.	9.4.12
Service Building RCA Area Exhaust System	Added HEPA filters.	Maintain offsite doses as low as reasonably achievable	9.4.12 .
Service Building RCA Area Air System	Counting room uses outside air for ventilation.	Enhances control of negative pressures.	9.4.12
Service Water Pump House Switchgear Rooms Ventilating System	A single Train A and a single Train B ventilating supply air fans furnish outside ventilation air to both switchgear rooms.	Switchgear rooms are redundant.	9.4.13
Service Water Cooling Tower Heating and Ventilating System	Add Heating and Ventilating System.	Required to maintain proper environment for equipment.	9.4.14
Fire Protection System	Delete control room complex fixed CO_2 system.	Maintain habitability.	9.5.1
Fire Protection System	Delete cable spreading room fixed CO_2 system, and add deluge sprinkler system.	Conform to BTP 9.5-1.	9.5.1
	Add cable spreading room, turbine lube oil storage tank, hydraulic fluid power unit, and diesel fuel oil storage tank deluge systems.	Conform to BTP 9.5-1.	9.5.1
	Delete standby reserve auxiliary transformer and station auxiliary transformer systems.	Transformers eliminated.	9.5.1
	Add photoelectric detectors.	Use where best suited.	9.5.1
	Change panel power supply to 120V AC power normal and 72 hour self-contained battery backup emergency power.	Provide backup power supply.	9.5.1
	Add computer room Halon system.	Maintain habitability.	9.5.1

Item	FSAR Change	Reasons For Change	Reference Section
	Add diesel generator fuel oil day tank deluge system.	Conform to BTP 9.5-1.	9.5.1
	Delete cable tunnels and electrical penetration areas deluge systems. Add preaction systems to above areas.	Protection against inadvertent operation.	9.5.1
	Add standpipes and hose stations to Diesel Generator Building, Control Building, Waste Processing Building, Primary Auxiliary Building, equipment vaults, Emergency Feedwater Pump Building, Containment Building and Fuel Storage Building.	Conform BTP 9.5-1	9.5.1
Fire Protection System	Add backup water supply to stand-pipe system from service water system.	Provide reliable backup water supply to conform to BTP 9.5-1.	9.5.1
	Add automatic sprinkler system coverage to certain areas in the Turbine Generator Building and the feedwater heater bay.	ANI requirements.	9.5.1
	Add manually operated open head sprinklers for turbine generator bearings and lube oil lines.	Prevent inadvertent operation.	9.5.1
	Fire system piping in areas containing Category I equipment is seismically supported as required for a Category I system.	All fire system piping in Category I equipment areas is dry pipe	9.5.1
	Added fire detection in several areas.	To meet NFPA code requirements.	9.5.1
	Added fire suppression in several areas.	To meet BTP 9.5-1 requirements.	9.5.1
Main Condensers	Tube material changed from copper-nickel to titanium.	Improve reliability.	10.4.1
	Tube sheet material changed from copper- nickel to aluminum bronze.	To be compatible with titanium tubes.	10.4.1

Item	FSAR Change	Reasons For Change	Reference Section
	Mechanical vacuum pumps used in place of steam jet air ejectors for air evacuation.	Simplify operations.	10.4.2
Feedwater Isolation Valves	Actuation is pneumatic in lieu of motor- operated.	As purchased.	10.4.7
Steam Generator Blow- down System	Blowdown evaporators are natural circulation, internal heating elements, not forced circulation.	Natural circulation units are adequate and less costly.	10.4.8
	Added a recycle subsystem	To reduce site water consumption.	10.4.8
Circulating Water System	Added chlorination subsystem for circulating water piping.	Reduce marine growth in tunnel.	10.4.9
Radioactive Waste Management Systems			
Liquid Waste System	All filters are cartridge-type, not backwashable.	Economic evaluation.	11.2
	Steam generator blowdown processing is performed by blowdown demineralizers.	Steam generator blowdown system is provided with demineralizers for secondary system water reuse.	11.2 Appendix 11A
	Hydrogenated drain collection system deleted.	Equipment drains will not be recycled.	11.2
	Liquid waste system, boron recovery system, and steam generator blowdown system all release directly to the circulating water discharge	Minimize contamination of the service water system.	11.2
	Aerated waste recovery system deleted.	Volume of equipment drains which could be collected by this system did not warrant a separate collection system.	11.2
Process and Effluent Radiological Monitoring and Sampling Systems	Added radiation monitoring instrumentation for main steam lines.	Detect radiation resulting from steam generator tube rupture.	11.5

Item	FSAR Change	Reasons For Change	Reference Section
	Radiation monitoring system changed from an analog system to a digital computer based system.	Improve system efficiency and reliability.	11.5,12.3.4
Process and Effluent Radiological Monitoring and Sampling Systems	Additional radiation monitoring channels have been added.	Improve system efficiency and reliability.	11.5
	Radiation monitors on component cooling surge tank vent lines provide no control function, alarm only.	Design evolution.	11.5
	Steam generator blowdown monitors shut only the blowdown flash tank discharge on high radiation, not the blowdown isolation valves.	Design evolution.	11.5
	Service water system monitor has been deleted.	Sensitivity requirements for the detector would far exceed those commercially available.	11.5 11.5, 9.2.1
Loose Parts Detection System	System added.	To meet the requirements of Regulatory Guide 1.133.	4.4.6.4
Personnel Protection	Access control card readers and alarms added to control access to Zone IV and V areas.	To improve reliability and protection.	12.1
Control Room Air Intake Monitors	The airborne particulate radioactivity monitors have been changed to in-line GM tubes designed to operate on gross radiation increase.	To improve system efficiency.	12.3.4
Radiation Monitoring System	Additional in-line gross gamma detectors added in various ventilation ducts.	Help locate sources of contamination quickly.	12.3.4
Containment Online Purge System	Add automatic isolation of the containment isolation valves on high radiation in the containment.	To improve safeguards.	12.3.4

Item	FSAR Change	Reasons For Change	Reference Section
Containment Refueling Purge System	Add automatic isolation of the containment isolation valves on high radiation in the containment.	To improve safeguards.	12.3.4
Area Radiation and Airborne Radioactivity Monitoring	Extended upper range of plant vent stack monitors from 10^2 µci/cc to 10^5 µci/cc and the in-containment post-LOCA monitors from 10^7 rads/hr to 10^8 rads/hr.	Quantify high level releases.	12.3.4
	Added containment post-LOCA radiation monitors.	Provide instrumentation capable of withstanding post-LOCA environment in containment	12.3.4
Onsite Technical Support Center	Added in Control Building at elevation 75'.	Provide area for display and transmission of plant status, and for technical consultation during an emergency situation.	13.3
Onsite Operational Support Center	Added onsite area for this purpose.	Provide assembly area for shift personnel during an emergency situation.	13.3
Shutdown Monitor	A safety-related excore nuclear instrumentation system and shutdown monitor have been added.	To comply with the guidance of Regulatory Guide 1.97 and to provide additional indication to the operators of a boron dilution event.	7.6.10
Inadequate Core Cooling Instrumentation (ICCI)	An ICCI system has been added to monitor reactor vessel level, core differential pressure, core exit temperatures, and subcooling margin.	To comply with the requirements of NUREG-0737.	Later
Safety Parameter Display System (SPDS)	A SPDS was incorporated into the Main Plant Computer System.	To comply with the requirements of NUREG-0737, Supplement 1.	Later
Instrument Sensing Line Installation	The design criteria for instrument line installation has been modified to comply with Regulatory Guide 1.151.	To comply with Regulatory Guide 1.151.	7.1.2.12

TABLE 1.5-1 J-LOOP PHASE I TEST PARAMETERS

Parameters	**Nominal Value**
Initial Steady State Conditions	
Pressure	1250 to 2250 psia
Test section mass velocity	2.3 to 2.5×10^6 lb/hr-ft^2
Core inlet temperature	560°F to 600°F
Maximum heat flux	306,000 to 531,000 Btu/hr-ft^2
Transient Ramp Conditions	
Pressure decrease	0 to 350 psi/sec and subcooled depressurization from 2250 psia
Flow decrease	0 to 100%/sec
Inlet enthalpy	Constant

TABLE 1.5-2 PHASE II TEST PARAMETERS

Parameters	**Nominal Value**
Initial Steady State Conditions	
Pressure	2250 psia
Test section mass velocity	2.5×10^6 lb/hr-ft^2
Inlet coolant temperature	560°F
Maximum heat flux	531,000 Btu/hr-ft^2
Transient Conditions	
Simulated break	Double-ended cold leg guillotine breaks

TABLE 1.6-1 TOPICAL REPORTS INCORPORATED BY REFERENCE

Report	Reference Section(s)
"Single Phase Local Boiling and Bulk Boiling Pressure Drop Correlations," WCAP-2850 (Proprietary), April 1966 and WCAP-7916, June 1972.	4.4
"Hydraulic Tests of the San Onofre Reactor Model," WCAP-3269-8, June 1964.	4.4
"LEOPARD - A Spectrum Dependent Non-Spatial Depletion Cod for the IBM-7094," WCAP-3269-26, September 1963e	4.3, 9.1, 15.0
"Control Procedures for Xenon-Induced X-Y Instabilities in Large PWRs," WCAP-3680-21, (EURAEC-2111), February 1969.	4.3
"Xenon-Induced Spatial Instabilities in Three-Dimensions," WCAP-3680-22 (EURAEC-2116), September 1969.	4.3
"Pressurized Water Reactor pH - Reactivity Effect Final Report," WCAP-3696-8 (EURAEC-2074), October 1968.	4.3
"Melting Point of Irradiated UO_2" WCAP-6065, February 1965.	4.2
"SATAN-VI Program: Comprehensive Space-Time Dependent Analysis of Loss-of-Coolant," WCAP-6174, June 1974.	6.2
"The TURTLE 24.0 Diffusion Depletion Code," WCAP-7213-P-A (Proprietary) and WCAP-7758-A (Nonproprietary), February 1975.	15.0,
"A Comprehensive Space-Time Dependent Analysis of Loss-of- Coolant (SATAN-IV Digital Code)," WCAP-7263, August 1971 (Proprietary) and WCAP-7750 (Nonproprietary), August 1971.	3.6(N)
"Solid-State Logic Protection System Description," WCAP-7488-L, (Proprietary) January 1971 and WCAP-7672 (Nonproprietary), June 1971.	7.2, 7.3
"Radiological Consequences of a Fuel Handling Accident," WCAP-7518-L (Proprietary) July 1971 and WCAP-7828 (Nonproprietary), December 1971.	15.7
"Seismic Vibration Testing with Sine Beats," WCAP-7558, October 1971.	3.10(N)
"An Evaluation of the Rod Ejection Accident in Westinghouse Pressurized Water Reactors Using Spatial Kinetics Methods," WCAP-7588, Revision 1A, January 1975.	15.4

Report	Reference Section(s)
"Interchannel Thermal Mixing with Mixing Vane Grids," WCAP-7667-P-A (Proprietary), January 1975 and WCAP-7755-A, January 1975.	4.4
"Testing of Engineered Safety Features Actuation System," WCAP-7705, Revision 2, January 1976. (Information only; i.e., not a generic topical WCAP.)	7.3
"An Evaluation of Solid-State Logic Reactor Protection in Anticipated Transients," WCAP-7706-L (Proprietary) and WCAP-7706 (Nonproprietary), July 1971.	4.6, 7.1, 7.2
"Electric Hydrogen Recombiner for PWR Containments," WCAP-7709 (Proprietary) and WCAP-7820, Supplements, 1, 2, 3, 4 and 5 (Nonproprietary).	6.2
"Sensitized Stainless Steel in Westinghouse PWR Nuclear Steam Supply Systems," WCAP-7735, August 1971.	5.2
"Overpressure Protection for Westinghouse Pressurized Water Reactors," WCAP-7769, October 1971.	15.2
"Overpressure Protection for Westinghouse Pressurized Water Reactors," WCAP-7769, Revision 1, June 1972.	5.2
"Nuclear Fuel Division Quality Assurance Program Plan," WCAP-7800, Revision 5, December 1977.	17.3
"Behavior of Austenitic Stainless Steel in Post Hypothetical Loss-of-Coolant Accident Environment," WCAP-7803, December 1971.	6.1
"Power Distribution Control of Westinghouse Pressurized Water Reactors," WCAP-7811, December 1971.	4.3
"Evaluation of Protective Coatings for Use in Reactor Containments," WCAP-7825, December 1971.	6.1
"Evaluation of Steam Generator Tube, Tube Sheet, and Divider Plate Under Combined LOCA Plus SSE Conditions," WCAP-7832-A, April 1978.	5.4
"Neutron Shielding Pads," WCAP-7870, May 1972.	3.9(N)
"LOFTRAN Code Description," WCAP-7907, October 1972.	5.2, 15.0, 15.3, 15.5
"MARVEL, A Digital Computer Code for Transient Analysis of a Multiloop PWR System," WCAP-7909, June 1972.	6.3

Report	Reference Section(s)
"Process Instrumentation for Westinghouse Nuclear Steam Supply System (4 Loop Plant using WCID-7300 Series Process Instrumentation)," WCAP-7913, January 1973.	7.2, 7.3
"Damping Values of Nuclear Power Plant Components," WCAP-7921-AR, May 1974.	1.8, 3.7(N)
"Basis for Heatup and Cooldown Limit Curves," WCAP-7924-A, April 1975.	5.3
"Effect of Axial Spacing on Interchannel Thermal Mixing with the R Mixing Vane Grid," WCAP-7941-P-A (Proprietary), January 1975 and WCAP-7959-A, January 1975.	4.4
"THINC-IV An Improved Program for Thermal-Hydraulic Analysis of Rod Bundle Cores," WCAP-7956, June 1973.	4.4
"Axial Xenon Transient Tests at the Rochester Gas and Electric Reactor," WCAP-7964, June 1971.	4.3
"Application of the THINC IV Program to PWR Design," WCAP-8054 (Proprietary), October 1973, and WCAP-8195, October 1973.	4.4
"Pipe Breaks for the LOCA Analysis of the Westinghouse Primary Coolant Loop," WCAP-8082-P-A, January 1975 (Proprietary) and WCAP-8172-A (Nonproprietary), January 1975.	3.6(N)
"A Summary Analysis of the April 30 Incident at the San Onofre Nuclear Generating Station Unit 1," WCAP-8099, April 1973.	5.3
"Reactor Coolant Pump Integrity in LOCA," WCAP-8163, September 1973.	5.4
"Calculation Model for Core Reflooding After a Loss-of-Coolant Accident (WREFLOOD Code)," WCAP-8170 (Proprietary) and WCAP-8171 (Nonproprietary), June 1974.	6.2, 15.6
"Operational Experience with Westinghouse Cores," (Up to December 31, 1977) WCAP-8183, Revision 7, March 1978.	4.2
"Fuel Densification Experimental Results and Model for Reactor Application," WCAP-8218-P-A (Proprietary), and WCAP-8219-A (Nonproprietary), March 1975.	1.8, 4.1, 4.2, 4.3, 4.4
"Safety Analysis of the 17x17 Fuel Assembly for Combined Seismic and Loss-of-Coolant Accident," WCAP-8236 (Proprietary) and WCAP-8288 (Nonproprietary), December 1973.	3.7(N), 4.2
"Safety Analysis of the 8-Grid 17x17 Fuel Assembly for Combined Seismic and Loss-of-Coolant Accident," WCAP-8236, Addendum 1 (Proprietary), March 1974 and WCAP-8288, Addendum 1 (Nonproprietary), April 1974.	3.7(N)

Report	Reference Section(s)
"Documentation of Selected Westinghouse Structural Analysis Computer Codes," WCAP-8252, April 1974.	3.6(N), 3.9(N)
"Source Term Data for Westinghouse Pressurized Water Reactors," WCAP-8253, Amendment 1, July 1975.	11.1
"Nuclear Instrumentation System," WCAP-8255, January 1974. (Additional background information only.)	7.2, 7.7
"Hydraulic Flow Test of the 17x17 Fuel Assembly," WCAP-8278 (Proprietary) and WCAP-8279 (Nonproprietary), February 1974.	4.2
"The Effect of 17x17 Fuel Assembly Geometry on Interchannel Thermal Mixing," WCAP-8298-P-A (Proprietary), January 1975 and WCAP-8299-A, January 1975.	4.4
"LOCTA-IV Program: Loss-of-Coolant Transient Analysis," WCAP-8301 (Proprietary) and WCAP-8305 (Nonproprietary), June 1974.	15.0, 15.6
"SATAN-VI Program: Comprehensive Space Time Dependent Analysis of Loss-of-Coolant," WCAP-8302 (Proprietary) and WCAP-8306 (Nonproprietary), June 1974.	15.0, 15.6
"Prediction of the Flow-Induced Vibration of Reactor Internals by Scale Model Tests," WCAP-8303-P-A (Proprietary) and WCAP-8317-A (Nonproprietary), July 1975.	3.9(N)
"Westinghouse Mass and Energy Release Data for Containment Design," WCAP-8312-A, August 1975.	6.2
"Control of Delta Ferrite in Austenitic Stainless Steel Weldments," WCAP-8324-A, June 1975.	1.8, 5.2
"Containment Pressure Analysis Code (COCO)," WCAP-8327 (Proprietary) and WCAP-8326 (Nonproprietary), June 1974.	15.6
"Westinghouse Anticipated Transients Without Reactor Trip Analysis," WCAP-8330, August 1974	4.3, 4.6, 15.1, 15.2, 15.8
"Westinghouse Emergency Core Cooling System Evaluation Model-Summary," WCAP-8339, June 1974.	6.2, 15.6
"Westinghouse ECCS -- Plant Sensitivity Studies," WCAP-8340 (Proprietary) and WCAP-8356 (Nonproprietary), July 1974.	15.6
"Westinghouse ECCS Evaluation Model Sensitivity Studies," WCAP-8341 (Proprietary) and WCAP-8342 (Nonproprietary), July 1974.	15.6

Report	Reference Section(s)
"Westinghouse Nuclear Energy Systems Divisions Quality Assurance Plan," WCAP-8370, Revision 7A, February 1975.	17.1
“Westinghouse Water Reaction Division Quality Assurance Plan," WCAP-8370, Revision 8A, September 1977, and Revision 9A, October 1979.	17.1
"Westinghouse Water Reactor Division Quality Assurance Plan," WCAP-8370/7800, Revision 10A/6A, November 1984	17.1
"Revised Clad Flattening Model," WCAP-8377 (Proprietary) and WCAP-8381 (Nonproprietary), July 1974.	4.2
"An Evaluation of Loss of Flow Accidents Caused by Power System Frequency Transients in Westinghouse PWRs," WCAP-8424, Revision 1, June 1975.	15.3
"17x17 Drive Line Components Tests - Phase IB, II, III, D-Loop Drop and Deflection," WCAP-8446 (Proprietary) and WCAP-8449 (Nonproprietary), December 1974.	3.9(N)
"Westinghouse ECCS Evaluation Model -- Supplementary Information," WCAP-8471 (Proprietary) and WCAP-8472 (Nonproprietary), April 1975.	15.6
"UHI Plant Internals Vibration Measurement Program and Pre and Post Hot Functional Examinations," WCAP-8516-P (Proprietary) and WCAP-8517 (Nonproprietary), April 1975.	3.9(N)
"Westinghouse ECCS-Four Loop Plant (17x17) Sensitivity Studies," WCAP-8565-P-A (Proprietary) and WCAP-8566-A (Nonproprietary), July 1975.	15.6
"The Application of Preheat Temperatures after Welding Pressure Vessel Steels," WCAP-8577, February 1976.	1.8
"Failure Mode and Effects Analysis (FMEA) of the Engineering Safeguard Features Actuation System," WCAP-8584 (Proprietary) and WCAP-8760 (Nonproprietary), April 1976.	4.6, 7.3
"Methodology For Qualifying Westinghouse PWR-SD Supplied NSSS Safety-Related Electrical Equipment," WCAP-8587, Revision 6, November 1983.	1.8, 3.11(N)
"Methodology for Qualifying Westinghouse WRD Supplied NSSS Safety-Related Electric Equipment," WCAP-8587, Revision 2, February 1979.	3.10(N)
"Westinghouse ECCS Evaluation Model -- October 1975 Version," WCAP-8622 (Proprietary) and WCAP-8623 (Nonproprietary), November 1975.	15.6

Report	Reference Section(s)
"General Method of Developing Multi-frequency Biaxial Test Inputs for Bistables," WCAP-8624 (Proprietary) September 1975 and WCAP-8695 (Nonproprietary), August 1975.	3.10(N)
"Fuel Rod Bow Evaluation," WCAP-8691 Revision 1 (Proprietary) and WCAP-8692 Revision 1 (Nonproprietary), July 1979.	4.2
"Delta Ferrite in Production Austenitic Stainless Steel Weldments," WCAP-8693, January 1976.	1.8, 5.2
"MULTIFLEX-A Fortran-IV Computer Program for Analyzing Thermal-Hydraulic-Structure System Dynamics," WCAP-8708, (Proprietary) and WCAP-8079 (Nonproprietary), February 1976.	3.9(N)
"Improved Analytical Models Used in Westinghouse Fuel Rod Design Computations," WCAP-8720 (Proprietary) and WCAP-8785 (Nonproprietary), October 1976.	4.2
"Verification of Neutron Pad and 17x17 Guide Tube Designs by Preoperational Tests on the Trojan 1 Power Plant," WCAP-8766 (Proprietary) and WCAP-8780 (Nonproprietary), May 1976.	3.9(N)
"Safety-Related Research and Development for Westinghouse Pressurized Water Reactors, Program Summaries," WCAP-8768, latest revision.	1.5 5.4
"Mass and Energy Releases Following A Steam Line Rupture," WCAP-8822, September 1976.	6.2
"Westinghouse 7300 Series Process Control System Noise Tests," WCAP-8892-A, June 1977.	7.1, 7.2
"Benchmark Problem Solutions Employed for Verification of the WECAN Computer Program," WCAP-8929, June 1977.	3.9(N)
"Safety Analysis for the Revised Fuel Rod Internal Pressure Design Basis," WCAP-8963 (Proprietary), November 1976 and WCAP-8964 (Nonproprietary), August 1977.	4.2
"Failure Mode and Effects Analysis (FMEA) of the Solid-State Full Length Rod Control System," WCAP-8976, September 1977.	4.6
"Inlet Orificing of Open PWR Cores," WCAP-9004, (Proprietary) January 1969 and WCAP-7836, (Nonproprietary) January 1972.	4.4
"Properties of Fuel and Core Component Materials," WCAP-9179, Revision 1 (Proprietary), July 1978.	4.2
"Westinghouse ECCS Evaluation Model, February 1978 Version," WCAP-9220-P-A (Proprietary Version), WCAP-9221-P-A (Nonproprietary Version), February 1978.	6.2

Report	Reference Section(s)
"Reactor Core Response to Excessive Secondary Steam Releases," WCAP-9226 (Proprietary), WCAP-9227 (Nonproprietary), January 1978.	15.1
"Report on the Consequences of a Postulated Main Feedline Rupture," WCAP-9230 (Proprietary) and WCAP-9231 (Nonproprietary), January 1978.	15.2
"Combination of Safe Shutdown Earthquake and Loss-of-Coolant Accident Responses for Faulted Condition Evaluation of Nuclear Power Plants," WCAP-9279, March 1978.	3.9(N)
"Integrity of Primary Piping System of Westinghouse Nuclear Power Plants During Postulated Seismic Events," WCAP-9283, March 1978.	3.9(N)
"Dynamic Fracture Toughness of ASME SA508 Class 2a and ASME SA533 Grade A Class 2 Base and Heat Affected Zone Material and Applicable Weld Metal," WCAP-9292, March 1978.	5.2
"COMPRESS, A Code for Calculating Subcompartment Pressure Responses," UEC-TR-004-1, July 1976.	6.2
"Prediction of Containment Pressure-Temperature Transients Using CONTRAST-S, A Digital Computer Program," UE&C-TR-006-0, March 1976.	6.2
"Quality Assurance Program," UE&C-TR-001-05A, March 21, 1978.	17.1
"Fire Protection System Evaluation and Comparison to Branch Technical Position APCSB 9.5-1, Appendix A," August 1977.	9.5
"A Method for Computing the Gamma-Dose Integrals I_1 and II_2 for the Finite Cloud Sector-Averaged Model," YAEC-1105, April 1976.	2.3
"Technical Bases for Eliminating Large Primary Loop Pipe Rupture as the Structural Design Basis for Seabrook Units 1 and 2," WCAP-10567, (Proprietary), June 1984 WCAP-10566, (Nonproprietary), June 1984.	3.6(N)
"The 1981 Version of the Westinghouse ECCS Evaluation Model Using the BASH Code," WCAP-10266-P-A Rev. 2 (Proprietary) and WCAP-11524-A (Nonproprietary), March 1987.	15.6
Special Report NS-NRC-85-3025(NP), "BART-WREFLOOD Input Revision."	15.6
"BART-A1: A Computer Code for the Best Estimate Analysis of Reflood Transients", WCAP-9561, January 1980.	15.6
"NOTRUMP - A Nodal Transient Small Break and General Network Code", WCAP-10079-P-A (Proprietary) and WCAP-10080-A (Nonproprietary), August 1985.	15.6

Report	Reference Section(s)
"Westinghouse Small Break ECCS Evaluation Model Using the NOTRUMP Code," WCAP-10054-P-A (Proprietary) and 10081-A (Nonproprietary), August 1985.	15.6
"Westinghouse Small Break LOCA ECCS Evaluation Model Generic Study with the NOTRUMP Code," WCAP-11145-P-A (Proprietary), and WCAP-11372-A (Non-Proprietary), October 1986.	15.6
"RETRAN-02 - A Program for Transient Thermal-Hydraulic Analysis of Complex Fluid Flow Systems, Volume 1: Theory and Numerics (Rev. 4)", EPRI NP-1850, November 1988.	15.0, 15.1, 15.2, 15.3, 15.4, 15.6
"VIPRE-01: A Thermal-Hydraulic Code for Reactor Cores", NP-2511-CCM, Electric Power Research Institute.	4.4, 15.1, 15.4
"Thermal-Hydraulic Analysis of PWR Fuel Elements Using the CHIC-KIN Code", YAEC-1241, March 1981.	1.8, 15.0, 15.3, 15.4
"CASMO-3G Validation", YAEC-1363, April 1988.	4.3
"SIMULATE-3 Validation and Verification", YAEC-1659-A, September 1988	4.3, 15.0, 15.1, 15.4
"STAR Methodology Application for PWRs, Control Rod Ejection, Main Steam Line Break", Volumes 1 and 2, YAEC-1752A, September/October 1990.	1.8, 15.0, 15.1, 15.4
"Thermal-Hydraulic Analysis Methodology Using VIPRE-01 for PWR Applications", YAEC-1849-P-A (Proprietary), October 1992.	4.4, 15.0, 15.1, 15.4
"Core Thermal Limit Protection Function Setpoint Methodology for Seabrook Station", YAEC-1854-P-A (Proprietary), October 1992.	4.4, 15.0
"Seabrook Station Unit 1 Fixed Incore Detector System Analysis", YAEC-1855-P-A (Proprietary), October 1992.	4.3
"System Transient Analysis Methodology Using RETRAN for PWR Applications", YAEC-1856-P-A (Proprietary), December 1992.	15.2
"Safety Analysis in Support of Wide-Band Operation and Core Design Enhancements for Seabrook Station", YAEC-1871-A, September 1993.	4.3
"GENRUP – A Computer Code for the Radiological Assessment of Steam Generator Tube Rupture Accidents", J. N. Hamawi, October 1987.	15.6

Report	Reference Section(s)
"Analysis of a Postulated Design Basis Steam Generator Tube Rupture for the Seabrook Nuclear Power Station". YAEC-1698, February 1991.	15.6
WCAP-13247, " Report on the Methodology for the Resolution of the Steam Generator Tube Uncovery Issue":, dated March 1992.	15.6
WCAP-13589-A, "Assessment of Clad Flattening and Densification Power Spike Factor Elimination in Westinghouse Nuclear Fuel," March 1995.	4.2, 4.3
WCAP-12488-A, "Westinghouse Fuel Criteria Evaluation Process," October 1994.	4.2
WCAP-10216-P-A, Revision 1A, "Relaxation of Constant Axial Offset Control, F_Q Surveillance Technical Specification," February 1994.	4.3
WCAP-10965-P-A, "ANC-A Westinghouse Advanced Nodal Code," September 1986.	4.3
WCAP-11596-P-A, "Qualification of the PHOENIX-P/ANC Nuclear Design System for Pressurized Water Reactor Cores," June 1998.	4.3
ANP-3243P, "Seabrook Station Unit 1 Fixed Incore Detector System Analysis Supplement to YAEC-1855PA," Revision 1, May 2014.	4.3
WCAP-17867-P-A, "Westinghouse SSPS Board Replacement Licensing Summary Report", October 2014.	7.2, 7.3

TABLE 1.8-1 GEI LABORATORY TESTING PROCEDURES SEABROOK STATION SEABROOK, NEW HAMPSHIRE

GEI Project Number	GEI Report Title and Date	Laboratory Test	NRC Preferred Procedure (Regulatory Guide 1.138)	Test Procedure Used	Reference Number
7286	Sample Descriptions For Borings Made November December, 1972 (Jan. 1973)	Water Contents on Split- spoon Jar Samples	ASTM D2216	ASTM D2216	1
		Plastic Limit	ASTM D424	ASTM D424, except perform two determinations within ±2% of average.	
		q_u (penetrometer) on Splitspoon Jar Samples	Not given	No ASTM or other standard established.	2
		Laboratory Soil Descriptions	ASTM D2488	ASTM D2488, except: a. Munsell color chart not used b. Consistency and density not described. c Mineralogy not described. d. Moisture condition not described.	3
	Cyclic Mobility Potential of Foundation Sands From Borings FIA and F2, Circulating Water Conduits (June 1973, revised Oct 1973)	Sieve Analyses	ASTM D421 and D422	ASTM D421 and D422, except: a. Samples not air-dried prior to splitting and preparation. b. Samples separated on #4 sieve rather than #10 sieve.	3
		CR Tests on Undisturbed Sand Samples 1.138	Paper by M.L. Silver referenced in Reg. Guide 1.138	CR test procedure described in GEI Report.	
		S_u (Torvane)	Not given	No ASTM or other standard established.	
		Laboratory Soil Descriptions	ASTM D2488	See Reference Number 2 above.	

GEI Project Number	GEI Report Title and Date	Laboratory Test	NRC Preferred Procedure (Regulatory Guide 1.138)	Test Procedure Used	Reference Number
		Handling and Storage of Undisturbed Samples	Reg. Guide 1.138, Section C.2	General procedures in use at the time of sampling conform to comments in NRC Reg. Guide 1.138	
	Geotechnical Report, Circulating Water Tunnels (June 1974)	Chloride Determination on Water Samples	AWWA Methods	AWWA Methods	
		Unconfined Compression on Rock	ASTM 2938	ASTM 2938	
		Density of Rock	U.S. Army Manual EM-1110 2-1906 referenced in Reg Guide 1.138	Tested by M.I.T.; procedures described in report by Gene Simmons	4
		Compression-wave velocity on Rock	ASTM D2845	See Reference Number 4 above.	
		Unit Weight of Rock	EM 1110-2-1906 procedure not noted or described in report.	Tested by University of Illinois;	5
		Unconfined Compression on Rock	ASTM D2938	See Reference Number 5 above.	
		Compression-wave-velocity on Rock	ASTM D2845	See Reference Number 5 above.	
		Hardness	Not given.	See Reference Number 5 above.	
	Geotechnical Report, Reactor Borings (July 31, 1974)	Laboratory Soil Descriptions	ASTM D2488	See Reference Number 2 above.	

GEI Project Number	GEI Report Title and Date	Laboratory Test	NRC Preferred Procedure (Regulatory Guide 1.138)	Test Procedure Used	Reference Number
	Geotechnical Report, Additional Plant-Site Borings...G-Series Borings (Oct. 1974)	Sieve Analysis Laboratory Soil Descriptions	ASTM D421 and D422 ASTM D2488	See Reference Number 3 above See Reference Number 2 above.	
	Geotechnical Report, Intake Tunnel Extension (Sept. 1975)	Laboratory Soil Descriptions	ASTM D2488	See Reference Number 2 above.	
		Atterberg Limits	ASTM D423 and D424	ASTM D423, except a. Soil not air-dried prior to preparation (i.e., used ASTM D2217 rather than D421). b. Groove formed with Casagrande grooving tool. c. Successive tests run from a wetter to a dryer state. Also see Reference Number 1 above.	
		Sieve Analyses	ASTM D421 and D422	See Reference Number 3 above.	
		Rock Hardness (Schmidt) Hammmer)	Not given	No ASTM or other standard established.	
76287	N.A.	None	-	-	
76301	N.A.	None	-	-	
77363	Heavy Equipment Haul Route Soil and Pavement Investigation (June	Sieve and Hydrometer Analyses	ASTM D421 and D422	See Reference Number 3 above. GEI hydrometer procedure used.	

GEI Project Number	GEI Report Title and Date	Laboratory Test	NRC Preferred Procedure (Regulatory Guide 1.138)	Test Procedure Used	Reference Number
	1978)				
		Simplified Boring Log Descriptions	ASTM D2488	Not ASTM D2488 content or format.	
77386	Preliminary Report Compression Tests on Structural Backfill and Sand-Cement (Jan. 1978) and letters dated Feb. 14, Feb. 27, March 10, 1978	Sieve Analysis	ASTM D421 and D422	See Reference Number 3 above.	
		Specific Gravity	ASTM D854	ASTM D854, except a. Temperature measured to 0.1°C b. Pycnometer calibrated at several temperatures. c. Oven-dried sample not soaked 12 hours prior to vacuum de-airing.	
		Moisture Density Relation	ASTM D1557	ASTM D1557	
		S Tests	Not given	GEI procedures used, details described in report.	7
		R tests	Not given	See Reference Number 7 above.	
		Sand Cement Compression Tests, 2.8-in.-dia. specimens	Not given	ASTM C192 and D1632	
		Sand Cement Compressive Strength - 2-in. Cubes	Not given	ASTM C305, C109	
78508	N.A.	None	-	-	
76301	Test Fill Study of Quartzite	Moisture Density Relation	ASTM D1557	ASTM D1557, except 1½-in. maximum particle size	

GEI Project Number	GEI Report Title and Date	Laboratory Test	NRC Preferred Procedure (Regulatory Guide 1.138)	Test Procedure Used	Reference Number
	Molecuttings (July 1979)			used for molecuttings.	
		Sieve Analyses Bulk Specific Gravity Rock Cuttings	ASTM D421 and D422 Not given	See Reference Number 3 above. ASTM C127	
		Specific Gravity – Soil	ASTM D854	See Reference Number 6 above.	

Geotechnical Engineers Inc.

TABLE 1.8-2 CODE CASES APPROVED FOR USE FOR THE BOP

The information in this Table was not revised, but has been extracted from the original FSAR and is provided for historical information. Code cases applicable to Seabrook are contained in the Seabrook Station Section XI Program.

Code Case	Date of Report Letter	Date of NRC Approved Letter	Title	Comments
N-218	10/15/79	5/30/80	Testing Lots of Carbon Steel solid, Bare Welding Electrode or Wire, Section III, Division 2	
N-228	10/15/79	5/30/80	Alternate Rules for Sequence of Completion of Code Data Report Forms and Stamping for Section III, Class 1, 2, 3 and MC Construction	
N-237	10/15/79	5/30/80	Hydrostatic Testing of Internal Piping, Section III, Division I	
N-103-1		11/21/79	7/9/80 Assignment of P-Nos. to ASTM Materials, Section III, Division 2, Class CB and CC	
N-279	12/8/80	12/29/80	Use of Torquing as a Locking Device for Section III, Division I, Class 1, 2 3, and MC Component Supports	The use of this code case by Seabrook is subject to the condition that when pre loading is used as a locking device and the joint is required to be removed, the bolting shall be replaced unless proof is presented that the bolting shall be replaced unless original bolting has not been permanently strained
N-368	6/22/84	7/30/84	Pressure Testing of Pump Discharge, Section III Division 1, Classes 2 and 3.	Conditionally acceptable providing applicant provides information to demonstrate that the length of discharge piping to which the code case is applied is reasonably short.
N-411	9/10/84	12/13/84	Alternative Damping Values for Seismic Analysis of Piping	
N-413	4/5/85	4/22/85	Minimum Size of Fillet Welds for Linear Type Supports, Section III, Division 1, Subsection NF	

SEABROOK STATION
UPDATED FINAL SAFETY ANALYSIS REPORT

CHAPTER 1
INTRODUCTION AND GENERAL DESCRIPTION OF PLANT

FIGURES

1.1-1	Lead Sheet Nuclear P&I Diagrams
1.1-2	Logic Diagram Symbols
1.2-1	Station Layout
1.2-2	Containment Structure Plan at Elevation (-)26'-0" General Arrangement
1.2-3	Containment Structure Plan at Elevation 0'-0" General Arrangement
1.2-4	Containment Structure Plan at Elevation 25'-0" General Arrangement
1.2-5	Containment Structure Plan at Elevation (-)44'-9", "A-A", "B-B" and "C-C" General Arrangement
1.2-6	Containment Structure Elevation "D-D", "E-E" and "F-F" General Arrangement
1.2-6A	Simplified Head Assembly and Cable Bridges
1.2-7	Primary Auxiliary Building Plans at Elevation 7'-0" and Below General Arrangement
1.2-8	Primary Auxiliary Building Plans at Elevation 25'-0" General Arrangement
1.2-9	Primary Auxiliary Building Plans at Elevations 53'-0" and 81' 0" General Arrangement
1.2-10	Primary Auxiliary Building Elevation "A-A" General Arrangement
1.2-11	Primary Auxiliary Building Elevation "C-C" and "D-D" General Arrangement
1.2-12	Primary Auxiliary Building Elevation "B-B" and "E-E" General Arrangement
1.2-13	R.H.R., Containment Spray, S.I., Equipment Vault General Arrangement - Plans

1.2-14	R.H.R., Containment Spray, S.I., Equipment Vault General Arrangement - Sections
1.2-15	Fuel Storage Building Plan at Elevations 7'-0" and 10'-0" General Arrangement
1.2-16	Fuel Storage Building Plan at Elevations 21'-6" and 25'-0" General Arrangement
1.2-17	Fuel Storage Building Plan at Elevations 64'-0" and 84'-0" General Arrangement
1.2-18	Fuel Storage Building Sections "A-A" and "B-B" General Arrangement
1.2-19	Fuel Storage Building Section "C-C" General Arrangement
1.2-20	Fuel Storage Building Sections "D-D" and "PF" General Arrangement
1.2-21	Fuel Storage Building Section "E-E" General Arrangement
1.2-22	Waste Processing Building Sections "G-G", "H-H" and "J-J" General Arrangement
1.2-23	Waste Processing Building Plan at Elevation (-)3'-0" General Arrangement
1.2-24	Waste Processing Building Plan at Elevation 25'-0" General Arrangement
1.2-25	Waste Processing Building Plan at Elevation 53'-0" General Arrangement
1.2-26	Waste Processing Building Elevation "A-A" General Arrangement
1.2-27	Waste Processing Building Elevation "B-B" General Arrangement
1.2-28	Waste Processing Building Elevation "C-C" General Arrangement
1.2-29	Waste Processing Building Elevation "E-E" General Arrangement
1.2-30	Waste Processing Building Plans at Elevations (-)31'-0", (-)18' 3" and 13'-0" General Arrangement
1.2-31	Control Building, Elevation 21'-6" Electrical General Arrangement
1.2-32	Control Building Control Room Arrangement Plan at Elevation 75' 0"
1.2-33	Control Building Section "B-B"
1.2-34	Diesel Generator Building Plan and Sections below Grade General Arrangement
1.2-35	Diesel Generator Building Plans above Grade General Arrangement
1.2-36	Diesel Generator Building Sections above Grade General Arrangement
1.2-37	Turbine Building Plan- Ground Floor Elevation 21'-0" General Arrangement
1.2-38	Turbine Building Plan- Mezzanine Floor Elevations 46'-0" and 50' 0" General Arrangement

1.2-39	Turbine Building Plan- Operating Floor Elevation 75'-0" General Arrangement
1.2-40	Turbine Building Longitudinal Section "A-A" General Arrangement
1.2-41	Turbine Building Longitudinal Section "B-B" General Arrangement
1.2-42	Turbine Building Longitudinal Section "C-C" General Arrangement
1.2-43	Turbine Building Transverse Section "D-0" General Arrangement
1.2-44	Turbine Building Transverse Section "E-E" General Arrangement
1.2-45	Turbine Building Transverse Section "F-F" General Arrangement
1.2-46	Service and Circulating Water Pumphouse Plan and Section General Arrangement
1.2-47	Service and Circulating Water Pumphouse Plan below Grade General Arrangement
1.2-48	Service and Circulating Water Pumphouse Sections General Arrangement
1.2-49	Administration and Service Building First Floor Plan Elevation 21' 0"
1.2-50	Administration and Service Building Second Floor Plan Elevation 43' 0"
1.2-51	Emergency Feedwater Pump Building Plan and Sections General Arrangement
1.2-52	Circulating Water System- Tunnels General Plan
1.2-53	Profile of Intake and Discharge Tunnels- Circulating Water System
1.2-54	Ocean Intake Structure- Typical Section through Top of Intake Shaft and Head
1.2-55	Circulating Water System Double Discharge Nozzle (Typical)
1.2-56	Service Water Cooling Tower General Arrangement
1.2-57	Chlorination Building General Arrangement Plan
1.2-58	Chlorination Building General Arrangement Sections
1.2-59	Waste Processing Building - Steam Generator Blowdown Recovery General Arrangement
1.8-1	Vertical Design Response Spectra Scaled to 1g Horizontal Ground Acceleration (from Reg. Guide 1.60, Rev. 1, 12/73)

See LEGEND 1

This drawing is provided for historical purposes only and is not updated.

See LEGEND 2

This drawing is provided for historical purposes only and is not updated.

See 1-NHY-503100

This drawing is provided for historical purposes only and is not updated.

SEABROOK STATION UPDATED FINAL SAFETY ANALYSIS REPORT	Logic Diagram Symbols	
		Figure 1.1-2

See Figure 2.1-5

See 1-NHY-805051

This drawing is provided for historical purposes only and is not updated.

SEABROOK STATION UPDATED FINAL SAFETY ANALYSIS REPORT	Containment Structure Plan at Elevation (-)26'-0" General Arrangement	
		Figure 1.2-2

See 1-NHY-805052

This drawing is provided for historical purposes only and is not updated.

SEABROOK STATION UPDATED FINAL SAFETY ANALYSIS REPORT	Containment Structure Plan at Elevation 0'-0" General Arrangement	
		Figure 1.2-3

See 1-NHY-805053

This drawing is provided for historical purposes only and is not updated.

SEABROOK STATION UPDATED FINAL SAFETY ANALYSIS REPORT	Containment Structure Plan at Elevation 25'-0" General Arrangement	
		Figure 1.2-4

See 1-NHY-805055

This drawing is provided for historical purposes only and is not updated.

SEABROOK STATION UPDATED FINAL SAFETY ANALYSIS REPORT	Containment Structure Plan at Elevation (-)44'-9", "A-A", "B-B" and "C-C" General Arrangement	
		Figure 1.2-5

See 1-NHY-805056

This drawing is provided for historical purposes only and is not updated.

SEABROOK STATION UPDATED FINAL SAFETY ANALYSIS REPORT	Containment Structure Plan at Elevation "D-D", "E-E" and "F-F" General Arrangement	
		Figure 1.2-6

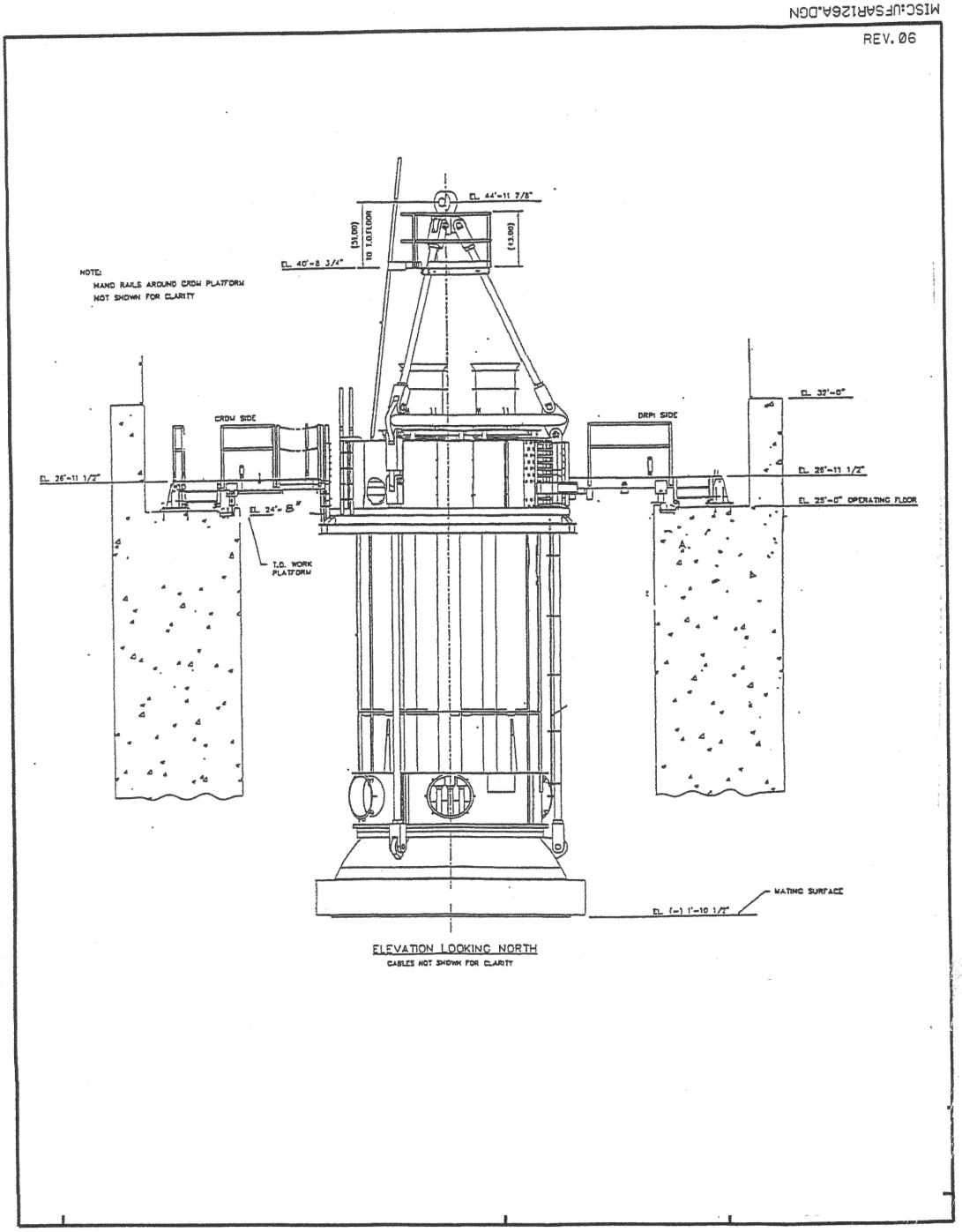

SEABROOK STATION UPDATED FINAL SAFETY ANALYSIS REPORT	Simplified Head Assembly and Cable Bridges	
		Figure 1.2-6A

See 805061

This drawing is provided for historical purposes only and is not updated.

SEABROOK STATION UPDATED FINAL SAFETY ANALYSIS REPORT	Primary Auxiliary Building Plans at Elevation 7'-0" and Below General Arrangement	
		Figure 1.2-7

See 1-NHY-805062

This drawing is provided for historical purposes only and is not updated.

SEABROOK STATION UPDATED FINAL SAFETY ANALYSIS REPORT	Primary Auxiliary Building Plans at Elevation 25'-0" General Arrangement	
		Figure 1.2-8

See 805063

This drawing is provided for historical purposes only and is not updated.

SEABROOK STATION UPDATED FINAL SAFETY ANALYSIS REPORT	Primary Auxiliary Building Plans at Elevations 53'-0" and 81'-0" General Arrangement	
		Figure 1.2-9

See 805064

This drawing is provided for historical purposes only and is not updated.

SEABROOK STATION UPDATED FINAL SAFETY ANALYSIS REPORT	Primary Auxiliary Building Elevation "A-A" General Arrangement	
		Figure 1.2-10

See 805065

This drawing is provided for historical purposes only and is not updated.

SEABROOK STATION UPDATED FINAL SAFETY ANALYSIS REPORT	Primary Auxiliary Building Elevation “C-C” and “D-D” General Arrangement	
		Figure 1.2-11

See 805066

This drawing is provided for historical purposes only and is not updated.

SEABROOK STATION UPDATED FINAL SAFETY ANALYSIS REPORT	Primary Auxiliary Building Elevation “B-B” and “E-E” General Arrangement	
		Figure 1.2-12

See 805060

This drawing is provided for historical purposes only and is not updated.

SEABROOK STATION UPDATED FINAL SAFETY ANALYSIS REPORT	R.H.R., Containment Spray, S.I., Equipment Vault General Arrangement - Plans	
		Figure 1.2-13

See 805078

This drawing is provided for historical purposes only and is not updated.

SEABROOK STATION UPDATED FINAL SAFETY ANALYSIS REPORT	R.H.R., Containment Spray, S.I., Equipment Vault General Arrangement – Sections	
		Figure 1.2-14

See 1-NHY-805058

This drawing is provided for historical purposes only and is not updated.

SEABROOK STATION UPDATED FINAL SAFETY ANALYSIS REPORT	Fuel Storage Building Plan at Elevations 7'-0" and 10'-0" General Arrangement	
		Figure 1.2-15

See 1-NHY-805059

This drawing is provided for historical purposes only and is not updated.

SEABROOK STATION UPDATED FINAL SAFETY ANALYSIS REPORT	Fuel Storage Building Plan at Elevations 21'-6" and 25'-0" General Arrangement	
		Figure 1.2-16

See 805084

This drawing is provided for historical purposes only and is not updated.

SEABROOK STATION UPDATED FINAL SAFETY ANALYSIS REPORT	Fuel Storage Building Plan at Elevations 64'-0" and 84'-0" General Arrangement	
		Figure 1.2-17

See 805085

This drawing is provided for historical purposes only and is not updated.

SEABROOK STATION UPDATED FINAL SAFETY ANALYSIS REPORT	Fuel Storage Building Sections “A-A” and “B-B” General Arrangement	
		Figure 1.2-18

See 805086

This drawing is provided for historical purposes only and is not updated.

SEABROOK STATION UPDATED FINAL SAFETY ANALYSIS REPORT	Fuel Storage Building Section "C-C" General Arrangement	
		Figure 1.2-19

See 805087

This drawing is provided for historical purposes only and is not updated.

SEABROOK STATION UPDATED FINAL SAFETY ANALYSIS REPORT	Fuel Storage Building Section “D-D” “F-F” General Arrangement	
		Figure 1.2-20

See 1-NHY-805088

This drawing is provided for historical purposes only and is not updated.

SEABROOK STATION UPDATED FINAL SAFETY ANALYSIS REPORT	Fuel Storage Building Section "E-E" General Arrangement	
		Figure 1.2-21

See 805659

This drawing is provided for historical purposes only and is not updated.

SEABROOK STATION UPDATED FINAL SAFETY ANALYSIS REPORT	Waste Processing Building Sections “G-G”, “H-H” and “J-J” General Arrangement	
		Figure 1.2-22

See 1-NHY-805660

This drawing is provided for historical purposes only and is not updated.

SEABROOK STATION UPDATED FINAL SAFETY ANALYSIS REPORT	Waste Processing Building Plan at Elevation (-)3'-0" General Arrangement	
		Figure 1.2-23

See 805661

This drawing is provided for historical purposes only and is not updated.

SEABROOK STATION UPDATED FINAL SAFETY ANALYSIS REPORT	Waste Processing Building Plan at Elevation 25'-0" General Arrangement	
		Figure 1.2-24

See 805662

This drawing is provided for historical purposes only and is not updated.

SEABROOK STATION UPDATED FINAL SAFETY ANALYSIS REPORT	Waste Processing Building Plan at Elevation 53'-0" General Arrangement	
		Figure 1.2-25

See 1-NHY-805663

This drawing is provided for historical purposes only and is not updated.

SEABROOK STATION UPDATED FINAL SAFETY ANALYSIS REPORT	Waste Processing Building Elevation "A-A" General Arrangement	
		Figure 1.2-26

See 805664

This drawing is provided for historical purposes only and is not updated.

SEABROOK STATION UPDATED FINAL SAFETY ANALYSIS REPORT	Waste Processing Building Elevation “B-B” General Arrangement	
		Figure 1.2-27

See 805665

This drawing is provided for historical purposes only and is not updated.

SEABROOK STATION UPDATED FINAL SAFETY ANALYSIS REPORT	Waste Processing Building Elevation "C-C" General Arrangement	
		Figure 1.2-28

See 805667

This drawing is provided for historical purposes only and is not updated.

SEABROOK STATION UPDATED FINAL SAFETY ANALYSIS REPORT	Waste Processing Building Elevation "E-E" General Arrangement	
		Figure 1.2-29

See 805669

This drawing is provided for historical purposes only and is not updated.

SEABROOK STATION UPDATED FINAL SAFETY ANALYSIS REPORT	Waste Processing Building Plans at Elevation (-)31'-0", (-)18'-3" and 13'-0" General Arrangement	
		Figure 1.2-30

See 1-NHY-310431

This drawing is provided for historical purposes only and is not updated.

SEABROOK STATION UPDATED FINAL SAFETY ANALYSIS REPORT	Control Building Elevation 21'-6" Electrical General Arrangement	
		Figure 1.2-31

See 1-NHY-500090

This drawing is provided for historical purposes only and is not updated.

SEABROOK STATION UPDATED FINAL SAFETY ANALYSIS REPORT	Control Building Control Room Arrangement Plan at Elevation 75'-0"	
		Figure 1.2-32

See 500091

This drawing is provided for historical purposes only and is not updated.

SEABROOK STATION UPDATED FINAL SAFETY ANALYSIS REPORT	Control Building Section "B-B"	
		Figure 1.2-33

See 202068

This drawing is provided for historical purposes only and is not updated.

SEABROOK STATION UPDATED FINAL SAFETY ANALYSIS REPORT	Diesel Generator Building Plan and Sections below Grade General Arrangement	
		Figure 1.2-34

See 1-NHY-202069

This drawing is provided for historical purposes only and is not updated.

SEABROOK STATION UPDATED FINAL SAFETY ANALYSIS REPORT	Diesel Generator Building Plans above Grade General Arrangement	
		Figure 1.2-35

See 202070

This drawing is provided for historical purposes only and is not updated.

SEABROOK STATION UPDATED FINAL SAFETY ANALYSIS REPORT	Diesel Generator Building Sections above Grade General Arrangement	
		Figure 1.2-36

See 1-NHY-202052

This drawing is provided for historical purposes only and is not updated.

SEABROOK STATION UPDATED FINAL SAFETY ANALYSIS REPORT	Turbine Building Plan – Ground Floor Elevation 21'-0" General Arrangement	
		Figure 1.2-37

See 1-NHY-202053

This drawing is provided for historical purposes only and is not updated.

SEABROOK STATION UPDATED FINAL SAFETY ANALYSIS REPORT	Turbine Building Plan – Mezzanine Floor Elevations 46'-0" and 50'-0" General Arrangement	
		Figure 1.2-38

See 1-NHY-202054

This drawing is provided for historical purposes only and is not updated.

SEABROOK STATION UPDATED FINAL SAFETY ANALYSIS REPORT	Turbine Building Plan – Operating Floor Elevation 75’-0” General Arrangement	
		Figure 1.2-39

See 202055

This drawing is provided for historical purposes only and is not updated.

SEABROOK STATION UPDATED FINAL SAFETY ANALYSIS REPORT	Turbine Building Longitudinal Section "A-A" General Arrangement	
		Figure 1.2-40

See 202056

This drawing is provided for historical purposes only and is not updated.

SEABROOK STATION UPDATED FINAL SAFETY ANALYSIS REPORT	Turbine Building Longitudinal Section "B-B" General Arrangement	
		Figure 1.2-41

See 202057

This drawing is provided for historical purposes only and is not updated.

SEABROOK STATION UPDATED FINAL SAFETY ANALYSIS REPORT	Turbine Building Longitudinal Section "C-C" General Arrangement	
		Figure 1.2-42

See 1-NHY-202058

This drawing is provided for historical purposes only and is not updated.

SEABROOK STATION UPDATED FINAL SAFETY ANALYSIS REPORT	Turbine Building Transverse Section "D-D" General Arrangement	
		Figure 1.2-43

See 202059

This drawing is provided for historical purposes only and is not updated.

SEABROOK STATION UPDATED FINAL SAFETY ANALYSIS REPORT	Turbine Building Transverse Section "E-E" General Arrangement	
		Figure 1.2-44

See 202060

This drawing is provided for historical purposes only and is not updated.

SEABROOK STATION UPDATED FINAL SAFETY ANALYSIS REPORT	Turbine Building Transverse Section "F-F" General Arrangement	
		Figure 1.2-45

See 1-NHY-202476

This drawing is provided for historical purposes only and is not updated.

SEABROOK STATION UPDATED FINAL SAFETY ANALYSIS REPORT	Service and Circulating Water Pumphouse Plan and Section General Arrangement	
		Figure 1.2-46

See 202477

This drawing is provided for historical purposes only and is not updated.

SEABROOK STATION UPDATED FINAL SAFETY ANALYSIS REPORT	Service and Circulating Water Pumphouse Plan below Grade General Arrangement	
		Figure 1.2-47

See 202478

This drawing is provided for historical purposes only and is not updated.

SEABROOK STATION UPDATED FINAL SAFETY ANALYSIS REPORT	Service and Circulating Water Pumphouse Sections General Arrangement	
		Figure 1.2-48

See 1-NHY-119522-1

This drawing is provided for historical purposes only and is not updated.

SEABROOK STATION UPDATED FINAL SAFETY ANALYSIS REPORT	Administration and Service Building First Floor Plan Elevation 21'-0"	
		Figure 1.2-49

See CIV-1-ASB-119523

This drawing is provided for historical purposes only and is not updated.

SEABROOK STATION UPDATED FINAL SAFETY ANALYSIS REPORT	Administration and Service Building Second Floor Plan Elevation 43'-0"	
		Figure 1.2-50

See 202065

This drawing is provided for historical purposes only and is not updated.

SEABROOK STATION UPDATED FINAL SAFETY ANALYSIS REPORT	Emergency Feedwater Pump Building Plan and Sections General Arrangement	
		Figure 1.2-51

See 101112

This drawing is provided for historical purposes only and is not updated.

SEABROOK STATION UPDATED FINAL SAFETY ANALYSIS REPORT	Circulating Water System – Tunnels General Plan	
		Figure 1.2-52

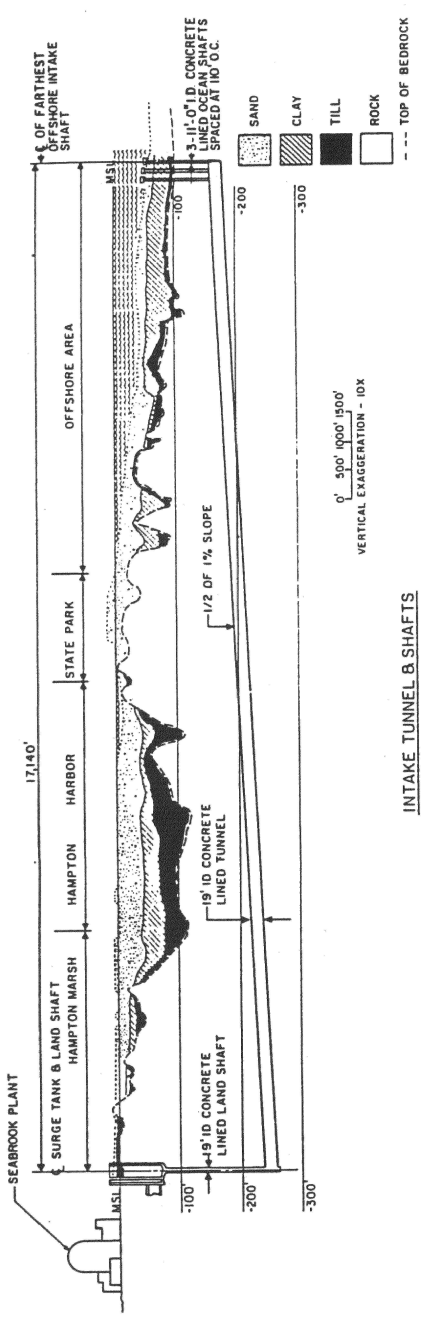

INTAKE TUNNEL & SHAFTS

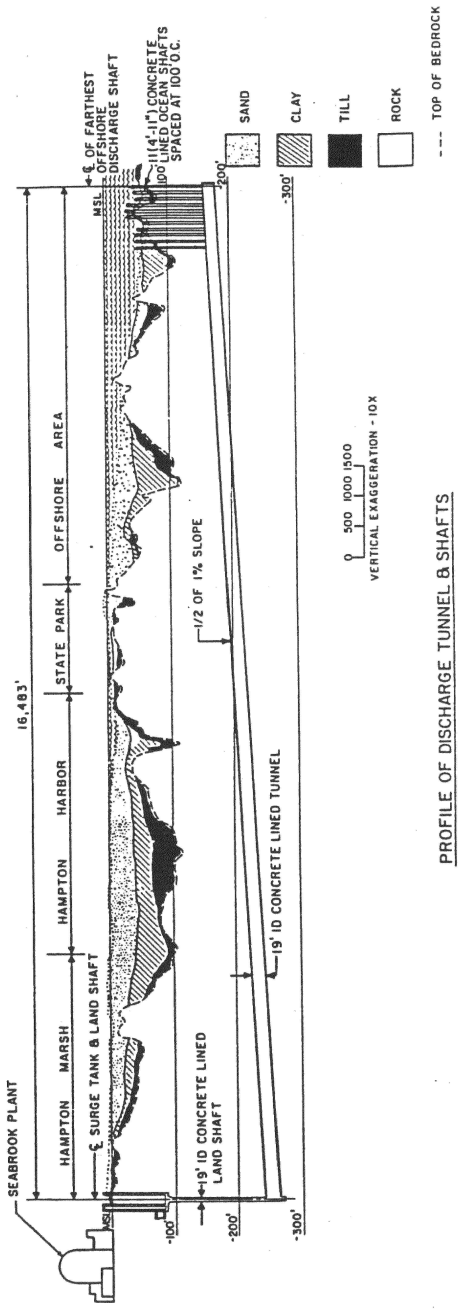

PROFILE OF DISCHARGE TUNNEL & SHAFTS

SEABROOK STATION UPDATED FINAL SAFETY ANALYSIS REPORT	Profile of Intake and Discharge Tunnels – Circulating Water System	
		Figure 1.2-53

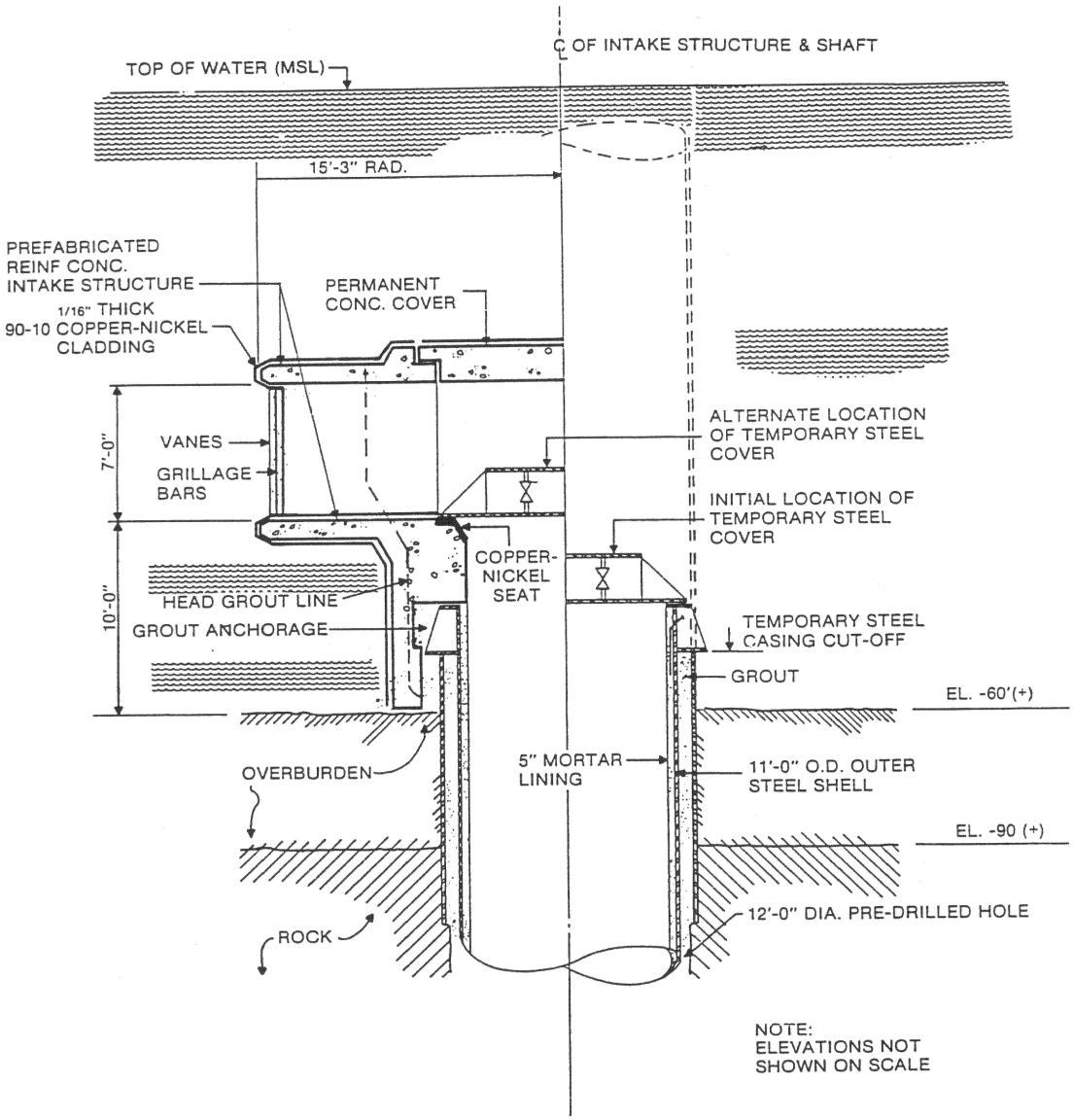

SEABROOK STATION UPDATED FINAL SAFETY ANALYSIS REPORT	Ocean Intake Structure – Typical Section through Top of Intake Shaft and Head	
		Figure 1.2-54

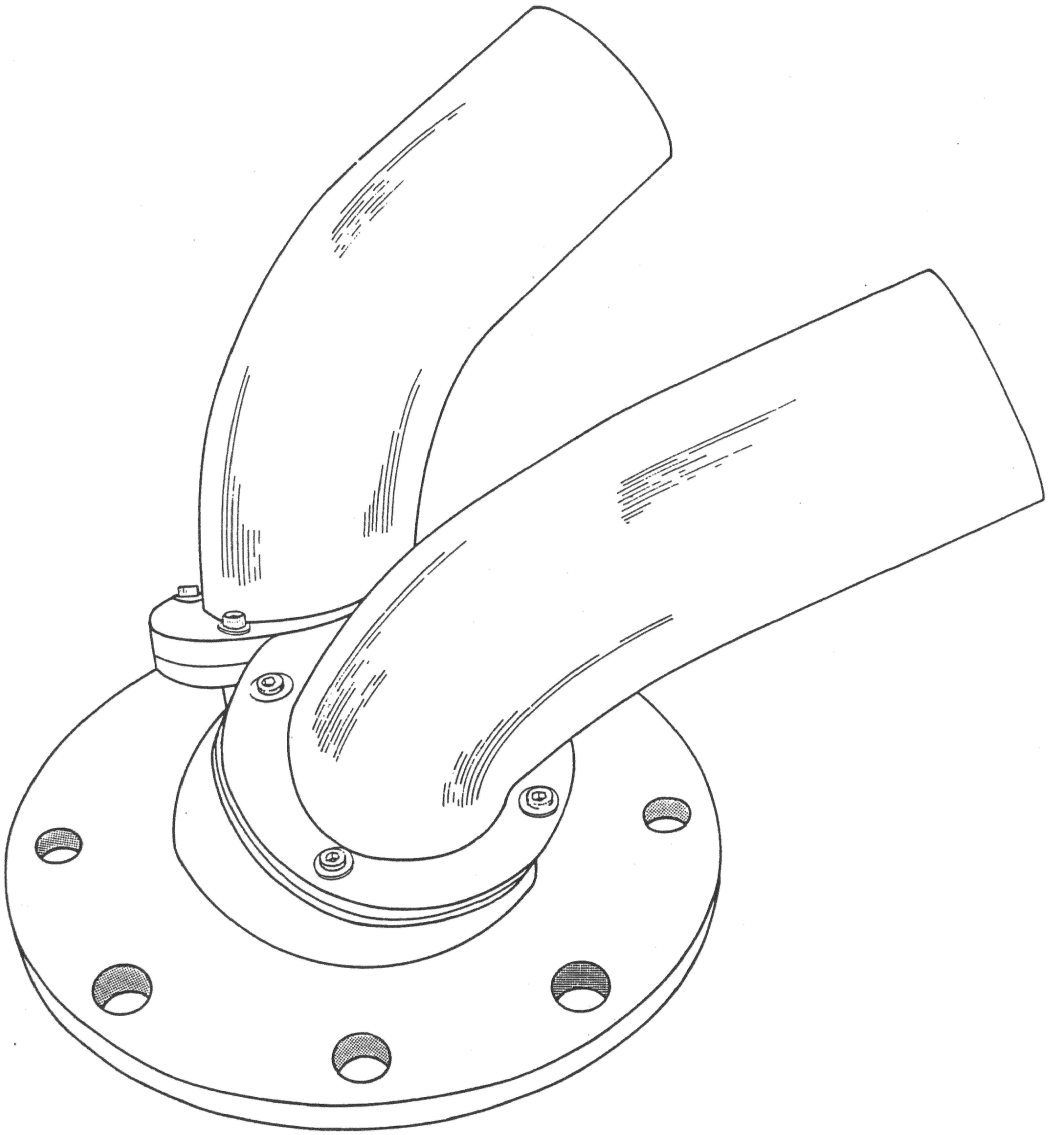

SEABROOK STATION UPDATED FINAL SAFETY ANALYSIS REPORT	Circulating Water System Double Discharge Nozzle (Typical)	
		Figure 1.2-55

See 1-NHY-805068

This drawing is provided for historical purposes only and is not updated.

SEABROOK STATION UPDATED FINAL SAFETY ANALYSIS REPORT	Service Water Cooling Tower General Arrangement	
		Figure 1.2-56

See 1-NHY-202474

This drawing is provided for historical purposes only and is not updated.

SEABROOK STATION UPDATED FINAL SAFETY ANALYSIS REPORT	Chlorination Building General Arrangement Plan	
		Figure 1.2-57

See 1-NHY-202475

This drawing is provided for historical purposes only and is not updated.

SEABROOK STATION UPDATED FINAL SAFETY ANALYSIS REPORT	Chlorination Building General Arrangement Sections	
		Figure 1.2-58

See 1-NHY-805657

This drawing is provided for historical purposes only and is not updated.

SEABROOK STATION UPDATED FINAL SAFETY ANALYSIS REPORT	Waste Processing Building – Steam Generator Blowdown Recovery General Arrangement	
		Figure 1.2-59

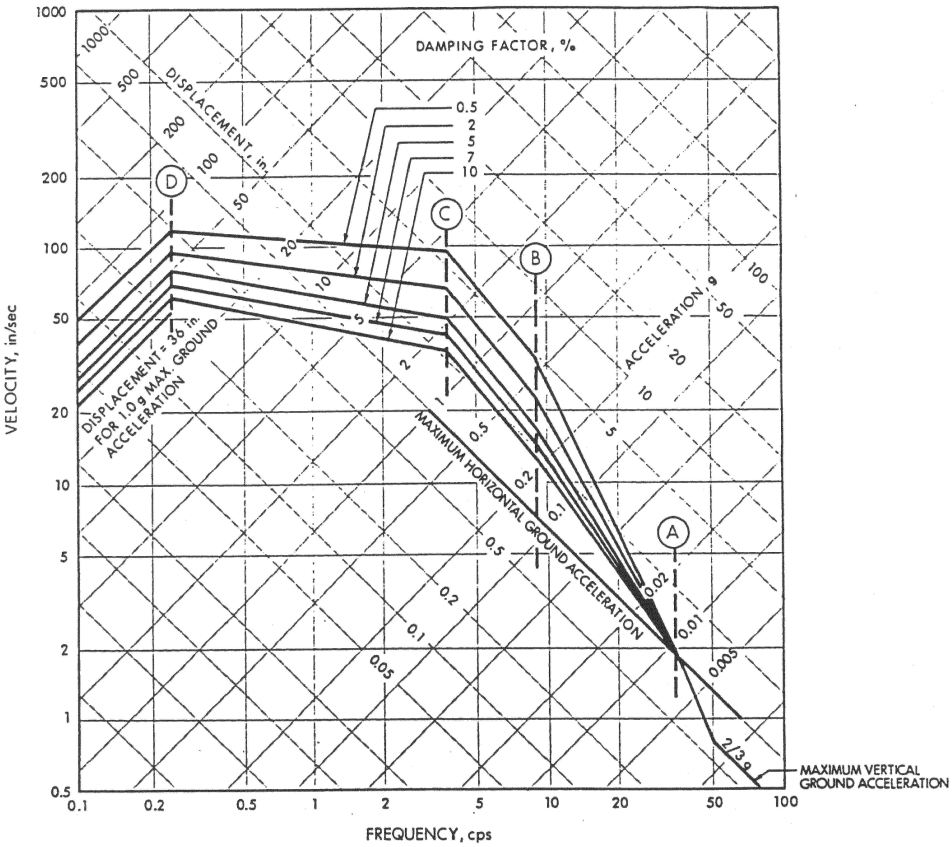

SEABROOK STATION UPDATED FINAL SAFETY ANALYSIS REPORT	Vertical Design Response Spectra Scaled 1g Horizontal Ground Acceleration (from Reg. Guide 1.60, Rev. 1, 12/73)	
		Figure 1.8-1