STEAM AND POWER CONVERSION SYSTEM

CHAPTER 10

TABLE OF CONTENTS

Section	Title	Page
10.0	STEAM AND POWER CONVERSION SYSTEM	10.1-1
10.1	SUMMARY DESCRIPTION	10.1-1
10.2	TURBINE-GENERATOR	10.2-1
10.2.1	DESIGN BASES	10.2-1
10.2.2	DESCRIPTION	10.2-2
10.2.3	TURBINE DISK INTEGRITY	10.2-6
10.2.4	EVALUATION	10.2-10
10.2.5	TESTING AND INSPECTION	10.2-10
	REFERENCES	10.2-11
10.3	MAIN STEAM SUPPLY SYSTEM	10.3-1
10.3.1	DESIGN BASES	10.3-1
10.3.2	SYSTEM DESCRIPTIONS	10.3-2
10.3.3	EVALUATION	10.3-4
10.3.4	INSPECTION AND TESTING REQUIREMENTS	10.3-6
10.3.5	SECONDARY WATER CHEMISTRY	10.3-7
10.3.6	STEAM AND FEEDWATER MATERIALS	10.3-10
	REFERENCES	10.3-12
10.4	OTHER FEATURES OF THE STEAM AND POWER CONVERSION SYSTEM	10.4-1
10.4.1	MAIN CONDENSER	10.4-1
10.4.2	AIR EVACUATION SYSTEM	10.4-5
10.4.3	TURBINE GLAND SEALING SYSTEM	10.4-6
10.4.4	STEAM DUMP AND BYPASS SYSTEM	10.4-8
10.4.5	CIRCULATING WATER SYSTEM	10.4-10
10.4.6	CONDENSATE CLEANUP SYSTEM	10.4-12
10.4.7	CONDENSATE, FEEDWATER AND HEATER DRAIN SYSTEM	10.4-12

Section	Title	Page
10.4.8	STEAM GENERATOR BLOWDOWN SYSTEM (SGBS)	10.4-15
10.4.9	AUXILIARY FEEDWATER SYSTEM	10.4-18
10.4.9A	AUXILIARY FEEDWATER SYSTEM, REQUIREMENTS EVALUATION	10.4.9A-1
10.4.9A	AUXILIARY FEEDWATER SYSTEM	10.4.9A-2
10.4.9B	AUXILIARY FEEDWATER SYSTEM RELIABILITY ANALYSIS	10.4.9B-i

STEAM AND POWER CONVERSION SYSTEM

CHAPTER 10

LIST OF TABLES

Table	Title	Page
10.2-1	DESIGN DATA FOR TURBINE-GENERATOR	T10.2-1
10.2-2	DELETED	T10.2-2
10.2-3	DELETED	T10.2-3
10.3-1	DESIGN DATA FOR MAIN STEAM SYSTEM PIPING AND VALVES	T10.3-1
10.3-2	MAIN STEAM LINE AND TURBINE EXTRACTION LINES	T10.3-5
10.3-3	DELETED	T10.3-7
10.3-4	DELETED	T10.3-8
10.3-5	AUXILIARY EQUIPMENT STEAM REQUIREMENTS	T10.3-9
10.3-6	DELETED	T10.3-11
10.3-7	MAIN STEAM/FEEDWATER PARAMETERS	T10.3-12
10.4-1	COMPONENT DESIGN PARAMETERS	T10.4-1
10.4-1a	AUXILIARY FEEDWATER SYSTEM MOTOR OPERATED VALVES	T10.4-14
10.4-2	AUXILIARY FEEDWATER MAKEUP REQUIREMENTS FOR HOT STANDBY AND HOT SHUTDOWN	T10.4-15
10.4-3	FAILURE MODES AND EFFECTS ANALYSIS – AUXILIARY FEEDWATER SYSTEM ASSUMING A FEEDWATER OR MAIN STEAM LINE BREAK IN ST GEN. B AND LOSS OF OFF SITE POWER	T10.4-16
10.4-4	FAILURE MODES AND EFFECTS ANALYSIS – AUXILIARY FEEDWATER SYSTEM ASSUMING AN AUXILIARY FEEDWATER LINE BREAK AND LOSS OF OFF SITE POWER	T10.4-18
10.4-5	AUXILIARY FEEDWATER SYSTEM INSTRUMENTATION	T10.4-20
10.4.9A-1	COMPARISON OF AFS SYSTEMS WITH NRC SYSTEM FLOW REQUIREMENTS	T10.4.9A-1
10.4.9A-2	AUXILIARY FEEDWATER SYSTEM (AFWS)	T10.4.9A-6
10.4.9A-3	DESIGN GUIDELINES FOR AFWS PUMP DRIVE AND POWER SUPPLY DIVERSITY FOR PWRS	T10.4.9A-11
10.4.9A-4	EVALUATION OF THE SL 2 AUXILIARY FEEDWATER SYSTEM VERSUS THE NRC AFW SHORT AND LONG TERM RECOMMENDATIONS	T10.4.9A-13

Table	Title	Page
10.4.9A-5	ST. LUCIE 2 LOSS OF FEEDWATER WITH OFFSITE POWER AVAILABLE - SEQUENCE OF EVENTS	T10.4.9A-25
10.4.9A-6	ST. LUCIE 2 LOSS OF FEEDWATER WITH LOSS OF OFFSITE POWER - SEQUENCE OF EVENTS	T10.4.9A-26
10.4.9A-7	ST. LUCIE 2 FEEDWATER LINE BREAK FOR HIGH Tavg CASE WITH OFFSITE 10.4.9A-28 POWER AVAILABLE - SEQUENCE OF EVENTS	T10.4.9A-27
10.4.9A-8	ST. LUCIE 2 FEEDWATER LINE BREAK FOR LOW Tavg CASE WITH LOSS OF OFFSITE POWER - SEQUENCE OF EVENTS	T10.4.9A-28
10.4.9A-9	INITIAL CONDITIONS	T10.4.9A-29
10.4.9B-1	COMPONENT LIST MANUAL VALVES	T10.4.9B-1
10.4.9B-2	AFS FAILURE MODES AND EFFECTS ANALYSIS	T10.4.9B-8
10.4.9B-3a	CUT SETS - LOFW AUTOMATIC AUXILIARY FEEDWATER SYSTEM INITIATION	T10.4.9B-16
10.4.9B-3b	CUT SETS - LOOP AUTOMATIC AUXILIARY FEEDWATER SYSTEM STUDY	T10.4.9B-24
10.4.9B-3c	CUT SETS - SBLO AUTOMATIC AUXILIARY FEEDWATER SYSTEM STUDY	T10.4.9B-35
10.4.9B-4a	CUT SETS - LOFW MANUAL AUXILIARY FEEDWATER SYSTEM STUDY	T10.4.9B-37
10.4.9B-4b	CUT SETS - LOOP MANUAL AUXILIARY FEEDWATER SYSTEM STUDY	T10.4.9B-44
10.4.9B-4c	CUT SETS - SBLO MANUAL AUXILIARY FEEDWATER SYSTEM STUDY	T10.4.9B-53
10.4.9B-5	BASIC EVENT FAILURE RATE DATA	T10.4.9B-54
10.4.9B-6	AFS VALVES SUBJECT TO ASME SECTION XI TESTING	T10.4.9B-56
10.4.9B-7a	DOMINANT CUT SETS - LOFW (AUTOMATIC)	T10.4.9B-57
10.4.9B-7b	DOMINANT CUT SETS - LOOP (AUTOMATIC)	T10.4.9B-58
10.4.9B-7c	DOMINANT CUT SETS - SB (AUTOMATIC)	T10.4.9B-59
10.4.9B-8a	DOMINANT CUT SETS - LOFW (MANUAL)	T10.4.9B-60
10.4.9B-8b	DOMINANT CUT SETS - LOOP (MANUAL)	T10.4.9B-61
10.4.9B-8c	DOMINANT CUT SETS - SB (MANUAL)	T10.4.9B-62

STEAM AND POWER CONVERSION SYSTEM

CHAPTER 10

LIST OF FIGURES

Figure	Title
10.1-1a	FLOW DIAGRAM MAIN STEAM SYSTEM
10.1-1b	FLOW DIAGRAM MAIN STEAM SYSTEM
10.1-1c	FLOW DIAGRAM EXTRACTION STEAM SYSTEM
10.1-1d	FLOW DIAGRAM EXTRACTION STEAM SYSTEM
10.1-1e	FLOW DIAGRAM AUXILIARY STEAM SYSTEM
10.1-1f	FLOW DIAGRAM AIR EVACUATION SYSTEM
10.1-1g	FLOW DIAGRAM MAIN STEAM
10.1-2a	FLOW DIAGRAM CONDENSATE SYSTEMS
10.1-2b	FLOW DIAGRAM FEEDWATER AND CONDENSATE SYSTEMS
10.1-3a	FLOW DIAGRAM HEATER DRAIN AND VENT SYSTEM
10.1-3b	FLOW DIAGRAM HEATER DRAIN AND VENT SYSTEM
10.2-1	HEAT BALANCES
10.2-2	HEAT BALANCES
10.2-3	STEAM PRESSURE VARIATION WITH POWER
10.2-4	TURBINE OVERSPEED PROTECTION ELECTROHYDRAULIC SYSTEM
10.2-5	DELETED
10.2-6	TURBINE HIGH-PRESSURE ELEMENT 1800-RPM DOUBLE FLOW DESIGN
10.2-7	TURBINE INNER CASING AND GUIDE BLADE CARRIERS
10.2-8	LOW-PRESSURE ELEMENT 1800 RPM DOUBLE FLOW DESIGN
10.2-9	DELETED
10.2-10	FLOW DIAGRAM TURBINE LUBE OIL SYSTEM
10.2-11	FLOW DIAGRAM TURBINE LUBE OIL SYSTEM
10.3-1	MAIN STEAM SAFETY VALVES V8201 - V8216 8770-993 2 SHS
10.3-2	MAIN STEAM ISOLATION VALVE SH 1 OF 9
10.3-3	DELETED

Figure	Title
10.4-1	CIRCULATING WATER SYSTEM OCEAN INTAKE AND DISCHARGE SHT. 1
10.4-2	OCEAN INTAKE AND DISCHARGE SYS SH. 2
10.4-3	OCEAN INTAKE AND DISCHARGE SYS SH. 3
10.4-4	OCEAN INTAKE AND DISCHARGE SYS SH. 4
10.4-5	FLOW DIAGRAM - STEAM GENERATOR BLOWDOWN PROCESS SYSTEM SHEET 1A & 1B
10.4-6	FLOW DIAGRAM - STEAM GENERATOR BLOWDOWN PROCESS SYSTEM SHEET 2
10.4-7	DELETED
10.4-8	FLOW DIAGRAM FEEDWATER & CONDENSATE SYSTEMS AND MAIN STEAM SYSTEM
10.4-8a	UNIT 1 - UNIT 2 CONDENSATE STORAGE TANK INTERTIE
10.4-9	DELETED
10.4-10	AUXILIARY FEEDWATER REQUIREMENTS FOR SHUTDOWN
10.4-12	FLOW DIAGRAM STEAM GENERATOR BLOWDOWN COOLING SYSTEM
10.4-13	MAIN FW PIPING ISOMETRIC
10.4-14	MAIN STEAM TRESTLE
10.4-15	TRESTLE MISSILE PROTECTION
10.4-16	MAIN STEAM AND FEEDWATER PIPING - SECT & DETAILS
10.4-17	DELETED
10.4.9A-1	LOMF W/AC STEAM GENERATOR INVENTORY VERSUS TIME
10.4.9A-2	LOMF W/LOOP STEAM GENERATOR INVENTORY VERSUS TIME
10.4.9A-3	FLB W/AC STEAM GENERATOR INVENTORY VERSUS TIME
10.4.9A-4	FLB W/AC PRESSURIZER LEVEL PERCENT VERSUS TIME
10.4.9A-5	FLB W/AC PRESSURIZER PRESSURE VERSUS TIME
10.4.9A-6	FLB W/AC CORE EXIT SUBCOOLING MARGIN VERSUS TIME
10.4.9A-7	FLB W/LOOP STEAM GENERATOR INVENTORY VERSUS TIME
10.4.9A-8	FLB W/LOOP PRESSURIZER LEVEL PERCENT VERSUS TIME
10.4.9A-9	FLB W/LOOP PRESSURIZER PRESSURE VERSUS TIME

Figure	Title
10.4.9A-10	FLB W/LOOP CORE EXIT SUBCOOLING MARGIN VERSUS TIME
10.4.9B-1	AFS SCHEMATIC DIAGRAM MANUAL DESIGN
10.4.9B-2	AFS SCHEMATIC DIAGRAM AUTOMATIC DESIGN
10.4.9B-3	FAULT TREE OF LOFW - MANUAL
10.4.9B-4	FAULT TREE OF LOOP - MANUAL
10.4.9B-5	FAULT TREE OF SB - MANUAL
10.4.9B-6	FAULT TREE OF LOFW - AUTOMATIC
10.4.9B-7	FAULT TREE OF LOOP - AUTOMATIC
10.4.9B-8	FAULT TREE OF SB - AUTOMATIC

10.0 STEAM AND POWER CONVERSION SYSTEM

10.1 SUMMARY DESCRIPTION

The Steam and Power Conversion System (SPCS) includes the steam system, turbine generator, main condenser and other auxiliary subsystems. The SPCS P & I diagrams are shown on Figures 10.1-1, 2, and 3. The SPCS is designed to convert thermal energy in the form of steam into electrical energy by means of a regenerative cycle turbine generator. The turbine consists of a high pressure turbine element, four moisture-separator/ reheater assemblies, and two low pressure turbine elements all aligned in tandem. After expanding in the turbine, the exhaust steam is condensed in the main condenser and the energy which is unusable in the thermal cycle is rejected to the Circulating Water System. The condensate is collected in the condenser hotwells while the noncondensible gases in the steam are removed by the air evacuation system.

The condensate is returned to the steam generators by means of two of the condensate pumps and the two steam generator feedwater pumps. The feedwater flows through five stages of heat exchangers (i.e., high-and low-pressure heaters) arranged in two parallel trains where the feedwater is heated by extraction steam from various stages of the turbine. Extraction steam condensate drains from the first three stages of low pressure heaters and is cascaded back to the condenser hotwell. The condensate drained from the fourth stage low pressure heaters and the fifth stage high pressure heaters is returned to the feedwater system by two heater drain pumps.

Heat produced in the reactor core is transferred from the reactor coolant to the water in the steam generators producing steam for use in the turbine. In the event of a turbine trip, the heat transferred from the reactor coolant to the steam generators is dissipated through the turbine bypass system to the condenser and/or through the atmospheric dump valves and main steam safety valves.

Various portions of the Steam and Power Conversion System are designated safety-related and designed to seismic Category I requirements.

Details, including safety related design features, of the Main Steam Supply, Steam Generator Blowdown and Auxiliary Feedwater Systems are discussed in Section 10.3 and Subsections 10.4.8 and 10.4.9, respectively.

Design data as well as design codes applied to system components are provided in their respective sections.

Refer to Dwg.
2998-G-079 SH 1

FLORIDA POWER & LIGHT COMPANY
ST. LUCIE PLANT UNIT 2

FLOW DIAGRAM
MAIN STEAM SYSTEM

FIGURE 10.1-1a

Amendment No. 10, (7/96)

Refer to Dwg.
2998-G-079 SH 2

FLORIDA POWER & LIGHT COMPANY
ST. LUCIE PLANT UNIT 2

FLOW DIAGRAM
MAIN STEAM SYSTEM

FIGURE 10.1-1b

Amendment No. 10, (7/96)

Refer to Dwg.
2998-G-079 SH 3

FLORIDA POWER & LIGHT COMPANY
ST. LUCIE PLANT UNIT 2

FLOW DIAGRAM
EXTRACTION STEAM SYSTEM

FIGURE 10.1-1c

Amendment No. 10, (7/96)

Refer to Dwg.
2998-G-079 SH 4

FLORIDA POWER & LIGHT COMPANY
ST. LUCIE PLANT UNIT 2

FLOW DIAGRAM
EXTRACTION STEAM SYSTEM

FIGURE 10.1-1d

Amendment No. 10, (7/96)

Refer to Dwg.
2998-G-079 SH 5

FLORIDA POWER & LIGHT COMPANY
ST. LUCIE PLANT UNIT 2

FLOW DIAGRAM
AUXILIARY STEAM SYSTEM

FIGURE 10.1-1e

Amendment No. 10, (7/96)

Refer to Dwg.
2998-G-079 SH 6

FLORIDA POWER & LIGHT COMPANY
ST. LUCIE PLANT UNIT 2

FLOW DIAGRAM
AIR EVACUATION STEAM SYSTEM

FIGURE 10.1-1f

Amendment No. 10, (7/96)

Refer to Drawing
2998-G-079 SH 7

FLORIDA POWER & LIGHT COMPANY
ST. LUCIE PLANT UNIT 2

FLOW DIAGRAM
MAIN STEAM

FIGURE 10.1-1g

Refer to Drawings
2998-G-080 SH 1A & B

FLORIDA POWER & LIGHT COMPANY
ST. LUCIE PLANT UNIT 2

FLOW DIAGRAM
CONDENSATE SYSTEM

FIGURE 10.1-2a

Refer to Dwg.
2998-G-080 SH 2A & B

FLORIDA POWER & LIGHT COMPANY
ST. LUCIE PLANT UNIT 2

FLOW DIAGRAM
FEEDWATER AND CONDENSATE SYSTEMS
FIGURE 10.1-2b

Refer to Drawings
2998-G-081 SH 1A & B

FLORIDA POWER & LIGHT COMPANY
ST. LUCIE PLANT UNIT 2

FLOW DIAGRAM
HEATER DRAIN & VENT SYSTEM
FIGURE 10.1-3a

Refer to Drawing
2998-G-081 SH 2

FLORIDA POWER & LIGHT COMPANY
ST. LUCIE PLANT UNIT 2

FLOW DIAGRAM
HEATER DRAIN & VENT SYSTEM

FIGURE 10.1-3b

10.2 TURBINE-GENERATOR

The main turbine receives steam from the two steam generators and converts a portion of the available enthalpy into electrical energy by driving the turbine generator. The Steam and Power Conversion System P & I diagrams are shown an Figures 10.1-1(a-f), 2a, 2b, 3a and 3b. Heat balances at stretch power and rated power are shown on Figures 10.2-1 and 10.2-2 respectively.

10.2.1 DESIGN BASES

The main turbine is designed for variations in steam pressure and temperature as shown on Figure 10.2-3. The system is also designed to accommodate steam, and pressure transients which will occur following a sudden loss of electrical load. Design data is presented in Table 10.2-1.

Figures 10.2-1 and 10.2-2 are retained for historical purposes and depict the projected heat loads and electrical output for normal and stretch power at the time of plant license.

Base load operation is expected for the turbine generator unit. Turbine generator gross electrical output corresponding to nominal full reactor power, and when operating at zero percent makeup with five stages of feedwater heaters in service, is 1080 MWe as shown on Figure 10.2-2a. Design data is presented in Table 10.2-1.

For the extended power uprate, the generator gross electric output is approximately 1045 MWe at a conservative NSSS power level of 3034 MWt (75F CWIT) as shown in Figure 10.2-2a.

Because the Nuclear Steam Supply System has the capability of accepting a step load change of 10 percent, and ramp load change of five percent per minute over the load range of 15 to 100 percent, the rate of load change of the turbine generator is restricted to these values although it has the capability of accepting load changes at faster rates. These load change rates can be accomplished without the operation of the turbine bypass system, described in Subsection 10.4.4.

The turbine generator is not required for operation under the stresses that could be imposed by the operating basis earthquake (OBE) or the safe shutdown earthquake (SSE); however the turbine generator is designed to function under the thermal stresses which could be imposed due to the upset, emergency, and faulted conditions as defined in ANSI N18.2, “Nuclear Safety Criteria for the Design of Stationery PWRS,” 1972.

The turbine-generator set and accessories are classified as non Seismic and are designed in accordance with industry standards where applicable (i.e., in accordance with ANSI codes for power piping, TEMA Standards for Heat Exchangers, NEMA standards, IEEE standards, Hydraulic Institute standards, ASME Power Test Code for Steam Turbines, ASME Code Section VIII, AWS and ASTM).

10.2.2 DESCRIPTION

The turbine is a Siemens Energy Inc., tandem-compound, four-flow exhaust, 1800 rpm unit and has moisture separation and reheat between the high pressure and the two low pressure elements. The ac generator and brushless-type exciter are direct-connected to the turbine generator shaft. The turbine consists of one double-flow high pressure element in tandem with two double-flow low pressure elements. The generator is a hydrogen cooled, rotor- arch-stator unit rated at 1200 MVA with the capability to accept the gross rated output of the turbine at rated steam conditions. The generator shaft seals are oil sealed to prevent leakage.

10.2.2.1 Turbine Generator Auxiliary Systems

There are four horizontal-axis, cylindrical-shell, combination moisture separator/reheater (MSR) assemblies located alongside the low pressure elements on the Turbine Building operating floor. This equipment receives steam from the exhaust of the high pressure turbine element. Internal manifolds in the lower section of these assemblies distribute the wet steam and allow it to rise through a chevron-type moisture separator where the moisture is removed. Steam extracted from the main steam line, upstream of the turbine, enters each MSR assembly, passes through the reheater bundle and leaves as condensate. The steam leaving the separator rises past the reheater tube bundle where it is reheated to 515°F when operating at full power. This reheated steam passes through nozzles in the top of the assemblies, flows to the low pressure turbine elements, and finally exhausts to the condenser (see Figure 10.1-1).

The turbine lube oil system supplies oil for lubricating the turbine generator and exciter bearings. Turbine oil purification equipment is available on both the Unit 2 and Unit 1 sites for removal of water and other impurities. Both units have the capability to transfer oil to each other for purposes of purification or in cases of emergency. See Figures 10.2-10 and 10.2-11.

Hydrogen is supplied by the bulk hydrogen storage system which is located on the north side of the St. Lucie Unit 1 intake structure. It consists of a tube trailer connected in parallel with a bottle header to the distribution header. The distribution header supplies hydrogen to the Turbine Building and Auxiliary Building for both St. Lucie Unit 1 and St. Lucie Unit 2. Operating procedures provide the precautions as well as the detailed steps to prevent fires and explosions while filling and purging the generator.

The hydrogen alarm panel alerts the operator to any off-normal hydrogen condition during normal operations.

The Main Extraction and Auxiliary Steam Systems P & I diagram is shown on Figure 10.1-1.

The heating steam for the feedwater heaters is extracted from the turbine as follows: Extractions for the high pressure heaters (2-5A & 2-5B) and low pressure heaters (2-4A & 2-4B) are from the high pressure turbine element; the extractions for the remaining low pressure heaters (2-1A,-1B,-2A,-2B,-3A &-3B) are from the low pressure turbine elements. High pressure heaters 2-5A and 2-5B are drained into low pressure heaters 2-4A and 2-4B; the drains from the low pressure heaters 2-4A and 2-4B are directed to the drain coolers. The condensate accumulated in the drain coolers is then pumped by the two heater drain pumps into the condensate system upstream of the low pressure heaters 4A & 4B. Alternate drains are also provided to automatically drain all the heaters directly to the condenser when a condition of high heater water level occurs. In addition, heaters 2-5A and 2-5B collect the drains from the reheater drain collectors and heaters 2-4A and 2-4B collect the drains from the moisture-separator drain pots.

The H.P. Turbine has two stop and two control valves in each of the two steam chests. The L.P. Turbines have one reheat stop and one interceptor valve in each of the four hot reheat lines. Therefore, the failure of one valve to close will not affect the shutdown of the turbine. The closing time for these valves including signal time is as follows: (a) stop valve 0.260 second, (b) control valve 0.230 second, (c) reheat stop valve 0.230 second, and (d) interceptor valve 0.230 second. These valves are hydraulically operated by the electrohydraulic control system. The hydraulic pressure keeps these valves open and loss of hydraulic pressure closes these valves by spring force.

The extraction steam lines from third, fourth and fifth point are provided with reverse current valves, which close immediately on flow reversal (within one second of turbine trip). The steam quantity ahead of the reverse current valves and in the extraction steam lines to the condenser neck heaters #1 and 2 is not enough to overspeed the turbine to the design overspeed of 120 percent normal speed on a turbine trip. On a turbine trip, the reactor is also tripped. The turbine extraction steam valves are exercised every 24 hours, which meets or exceeds the manufacturer's recommendation for testing.

The analysis of turbine-generator missile probabilities and effects of other externally generated missiles is discussed in Section 3.5 Plant Structures.

10.2.2.2 Turbine Protective Devices

The major protection device provided to the turbine generator set is the overspeed protection system which is completely described below. However, in addition to the overspeed trip mechanism, the turbine is provided protection for the following:

a. Low Condenser Vacuum - This tripping device is designed to trip the turbine in case of a serious rise in exhaust pressure. The unit will trip when the vacuum decreases to 18-22 inches of mercury.

b. Low Turbine Bearing Oil Pressure - The bearing oil pressure setting at normal speed is approximately 14-18 psig. However, should this pressure reach 5-6 psig the low bearing oil pressure protective device will trip the unit.

c. Thrust Bearing Trip - The thrust bearing trip device is designed to shut down the unit when the thrust bearing trip control pressure rises to above 75-80 psig.

Any turbine trip causes the hydraulic trip fluid header pressure to decrease and close steam to the turbine. The Turbine Control System and trips are discussed in Subsection 7.7.1.1.10.

Electric solenoid trip valves are also provided for remote manual trips. A periodic testing capability for the turbine trip solenoid valves (20 ET, 20 OCP-1, and 2) and their circuitry is provided to assure operability of the solenoid valves at power. All these protective devices operate independently and are arranged to activate the overspeed trip valve.

10.2.2.3 Turbine Overspeed Protection System

The main turbine has three overspeed protection systems;

a. Overspeed Protection Controller (OPC)

b. Two electronic, triple redundant Overspeed Protection Systems

The OPC and the primary electronic overspeed system do not share any sensing device.

Overspeed Protection Control (OPC) System

The OPC system is a digital electro-hydraulic control system that controls turbine overspeed in the event of a partial or complete loss of load and if the turbine reaches or exceeds 103 percent of rated speed. It trips the turbine at 111.5 percent of rated speed. Additionally, loss of hydraulic pressure or power failure in the electro-hydraulic system due to any cause will trip the turbine and the reactor.

Turbine power input is a function of high pressure (HP) exhaust pressure; a pressure transducer provides HP exhaust pressure. A three-phase watt transducer provides generated KW information. These quantities are compared: if they differ by a preset amount protective logic is activated. The signals from the transducers are checked against high and low reference voltages to determine when a transducer fails high or low. Overspeed information (in rpm) is supplied by active (powered) pick-ups coupled magnetically to a notched wheel on the turbine rotor. These pickups generate pulses which are fed to the digital electro-hydraulic (DEH) cabinet analog section to form speed channels; a control speed channel and an OPC speed channel.

The output of the control speed channel cards is compared to an overspeed setpoint. The resulting signal indicates when the speed is above the setpoint. If the speed is above the setpoint, a signal is generated for use by the overspeed protection controller (OPC) circuitry. It is also checked against a high and low limit. If either limit is exceeded, corresponding signals are generated.

The OPC continuously monitors the protection system inputs and outputs to notify the control room operators when equipment failures are encountered.

Upon complete loss of load, the mismatch of HP pressure and megawatts occurs and the breaker opens; this condition is detected as a complete load loss. When the generator breaker opens, the load drop anticipation (LDA) is set, requesting OPC action. All governor and interceptor valves are then rapidly closed. Load drop reset time is fixed at 10 sec. The LDA load loss circuit are inoperable below 22 percent load.

OPC action also occurs when turbine speed is equal to, or greater than, 103 percent of rated speed. Governor and interceptor valves are closed until the speed drops below 103 percent. The redundant electronic emergency trip system will de-energize triple redundant solenoids which will cause all turbine valves to trip of the turbine speed reaches 111 percent of rated speed (See Figure 10.2-4). An air pilot valve used to vent control air to close extraction steam non-return valves is also triggered by the trip systems.

Electronic Overspeed Protection System

Two independent, triple redundant electronic emergency trip systems replace the original mechanical overspeed protection system. Both systems independently release the control oil pressure, tripping all turbine valves when the turbine reaches 111 percent overspeed condition. Therefore, all valves capable of admitting steam into the turbine will close. The primary protection system uses triple redundant passive speed sensors to monitor turbine speed. The redundant protection system shares the triple redundant active (powered) speed sensors with the OPC controller. Turbine speed is also monitored by “built for purpose” speed cards capable of tripping the turbine independently (communication with the electronic emergency trip system controllers is not required). The resulting overspeed protection is therefore redundant and diverse.

Protective functions of the original autostop oil system are integrated into the primary electronic overspeed trip system. The turbine is tripped when any one of the pressure status manifolds detect a trip condition. Protection parameters, such as the low bearing oil pressure and low vacuum are monitored by pressure status manifolds equipped with triple redundant smart pressure transmitters. The thrust bearing is also monitored by triple redundant proximity probes, but does not provide a turbine trip. The primary protection system trips the turbine when any of these parameters exceed a setpoint specified by the turbine manufacturer. The primary protection system also provides a trip signal monitored by the redundant protection system. This results in a turbine trip from the redundant protection system. Additionally, protective logic in the original auto-stop oil system are “hard wired” via new tripping relay contacts, into each of the triple redundant solenoid trip circuits. (See Figure 10.2-4)

Each triple redundant electronic emergency trip system uses a testable dump manifold (TDM) to interface with the control oil system. The 2-out-of-3 solenoid logic used to provide a protective trip also provides a means to test the system automatically while on-line. The solenoids are tripped one at a time and installed pressure transmitters monitor the manifold for a detectable pressure change.

The operator has a graphic window on the Turbine Trip Status Display graphic where the operator can modify the Overspeed Trip #2 setpoint. It is normally set at 1998 rpm. During turbine run-up, a test mode can be entered which changes the overspeed trip setpoint to 1799 rpm. This test mode provides the ability to test overspeed trip capability without stressing the turbine by overspeeding. The Overspeed Trip #2 Setpoint is reset and test results are reported to the operator after completion of the test.

The Turbine Control System is discussed in Section 7.7. Upon occurrence of a turbine trip, a signal is supplied to the Reactor Protective System to trip the reactor. This is discussed in Section 7.2.

10.2.2.4 Turbine Supervisory Instrumentation

Turbine supervisory instrumentation (TSI) is designed to provide optimum insight into the mechanical integrity of the turbine generator. This system utilizes a combination of monitoring, recording and logging to collect data on the operation of the turbine. The TSI system is used to sense subtle changes in the operation of the turbine generator. The items listed below are valuable in monitoring the safe starting and loading of the turbine:

a. Radial Vibration and Vibration Phase Angle

b. Rotor Eccentricity

c. Differential Expansion

d. Thrust Bearing Monitor

e. Case Expansion

f. Turbine Speed and Acceleration

Historical record keeping or trending of these parameters provides a turbine mechanical maintenance program which may prove invaluable by preventing catastrophic equipment failure thereby decreasing unscheduled downtime.

Each instrument module is provided with continuous front panel indication and two levels of alarms. In addition to these local alarms, RTGB-201 contains two annunciator windows which warn the operator of abnormal turbine mechanical conditions. Parameter trending is accomplished via three, RTGB-201 mounted recorders which continuously monitor all inputs. A TSI electronic cabinet is located at elevation 43.00 feet in the RAB adjacent to the PSB-1 relay cabinet 2B. The cabinet is equipped with indication and alarms for monitoring the aforementioned Unit 2 turbine parameters. Additional monitoring is done via a recorder, displays, and an annunciator which are located on RTGB-201. The increasing margin of any one parameter's value from baseline information identifies a need for maintenance investigation and/or action depending on the severity of change.

A mimic or graphical representation of the turbine generator with all parameters monitored by the TSI system, is mounted on the rear of RTGB-201. Each parameter is depicted by an indicating light that illuminates when an alert condition is reached. The mimic furnishes the operator with a quick and accurate information about the turbine generator's mechanical condition.

10.2.3 TURBINE DISK INTEGRITY

Modern manufacturing and quality control procedures have eliminated the credibility of turbine rotor failures. To ensure this, FPL complies with the turbine vendor's inspection/refurbishment recommendations.

The main turbine is a Siemens Energy Inc. unit consisting of one high pressure (HP) and two low pressure (LP) elements as shown in Figures 10.2-6 through 10.2-8.

The probability of missile generation due to disk failure is evaluated in Subsection 3.5.1.3.

For many years, Siemens Energy Inc. original design of shrunk on disk rotors, as well as the advanced disk design, have demonstrated and proven the quality of this technology. The total number of fleet operating hours is more than 2,750,000 which have led to more than 40,000,000 disk operating hours, bearing in mind that each unit consists of two to three LP turbine elements with six to ten disks each. The oldest rotors have been in operation for approximately 225,000 operating hours, and the inspections of the disks performed after more than 200,000 hours detected no cracks.

Various important factors have contributed to this record:

a. Factory test procedures and inspection techniques

   Forgings are subject to inspection and testing both at the forging supplier and at Westinghouse. Present manufacturing and inspection techniques for turbine rotor and disc forgings make the possibility of an undetected flaw extremely remote. Current design procedures are well established and conservative, and analytical tools such as finite element and fracture mechanics techniques allow in-depth analysis of any potential trouble spots such as areas of stress concentration or inclusions which could give rise to crack propagation. Destructive testing of material specimens taken from the disc forgings and ultrasonic test of each disc following major heat treatment ensure sound discs with mechanical properties (tensile strength, yield strength, ductility and impact strength) equal to or exceeding the specified levels.

b. Redundancy in the protection system

   The turbine generator is provided with three overspeed protection systems, the overspeed protection controller (OPC) and two redundant electronic overspeed protection systems. The OPC (electro-hydraulic) control system and the primary electronic overspeed protection system do not share any sensing devices. These are discussed in detail in Subsection 10.2.2.

   On a turbine trip, two separate main steam line valves (stop and governing valves) are tripped closed to provide a redundant system.

It should be noted that each stop, governing, reheat stop and intercept valve is spring-closed; thus, it is only necessary to dump the high pressure fluid from under the servo-actuators to close the valves.

c. Operating test procedures

   Routine testing of the main steam valves and the mechanical emergency overspeed protective system while the unit is carrying load serve to verify continued operability of the overspeed protection.

d. High pressure turbine construction and design

   The high pressure turbine element, as shown on Figure 10.2-6, is of a double flow design thus it is inherently thrust-balanced. Steam from the four control valves enters at the center of the turbine element through four inlet pipes, two in the base and two in the cover.

Steam entering the HP turbine passes through the diagonal stage and flows through four reaction stages, all mounted on the inner casing upstream of the extraction. Downstream of the extraction, steam flows through four reaction stages mounted on the guide blade carriers, shown in Figure 10.2-7. The inner casing and the guide blade carriers are mounted on the outer casing.

The high pressure rotor is made of 26NiCrMoV10-10 alloy steel. The rotating blades are made of X20Cr13 high chromium steel. The rotor with rotating blades weighs approximately 122,842 lbs.

The inner casing and guide blade carriers are GX8CrNi12 high chromium steel castings. The diagonal stage guide blades are made of X22CrMoV12-1 high chromium steel. The reaction stage guide blades are made of X20Cr13 high chromium steel. The inner casing with stationary blades weighs approximately 48,722 lbs., and each guide blade carrier with stationary blades weighs approximately 28,396 lbs.

The outer casing cover and base (upper and lower half) are held together by means of more than 100 studs. The stud material is an allow steel. Specific replacement horizontal joint plane studs and support keys are made of X19CrMoNbVN11-1 high chromium steel. Specific replacement horizontal joint plane cap nuts are made of 21CrMoV5-7 alloy steel. Studs have lengths ranging from 17 to 66 inches and diameters ranging from 2.5 inches to 4.5 inches.

All significant fragments generated by any postulated failure of the HP turbine rotor would be contained by the HP turbine inner casing, guide blade carriers, and outer casing. There is a remote possibility that some minor missiles could result from the failure of couplings or portion of rotors which extend outside the casings. These missiles would be much less hazardous than the LP disk missiles, due to low mass and energy, and therefore do not require further consideration.

e. Low pressure turbine construction and design

The double flow low pressure turbine, shown on Figure 10.2-8, incorporates high efficiency blading, diffuser type exhaust and liberal exhaust hood design. The low pressure turbine cylinder is fabricated from steel plate to provide uniform wall thickness, reducing thermal distortion to a minimum. The entire outer casing is subjected to low temperature exhaust steam.

The temperature drop of the steam from its inlet to the LP turbine to its exhaust from the last rotating blades is taken across three walls; a guide blade carrier, a thermal shield, and an inner casing, as shown in Figure 10.2-8. This precludes a large temperature drop across any one wall, except the thermal shield which is not a structural element, thereby virtually eliminating thermal distortion. The fabricated inner cylinder is supported by the outer casing at the horizontal centerline and is fixed transversely at the top and bottom and axially at the centerline of the steam inlets, thus allowing freedom of expansion independent of the outer casing. The guide blade carrier is, in turn, supported by the inner casing, at the horizontal centerline and fixed transversely at the top and bottom and axially at the centerline of the steam inlets, thus allowing freedom of expansion independent of the inner casing. The inner casing is surrounded by the thermal shield. The steam leaving the last row of blades flows into the diffuser where the velocity energy is converted to pressure energy. The outer casing is fabricated mainly of ASTM 515-GR65 material. The low pressure rotors are made of NiCrMoV alloy steel. The inner casing is fabricated of ASTM A 516-GR70 and the guide blade carrier is fabricated of ASTM A 508 material.

The shrunk-on discs are made of NiCrMoV alloy steel. There are six discs shrunk on the shaft with three per flow. These discs experience different degrees of stress when in operation. Disc No. 1, starting from the transverse centerline, experiences the highest stress, while Disc No. 3 experiences the lowest.

10.2.3.1 Turbine Disk Design

The turbine is designed to withstand normal conditions, anticipated transients or accidents resulting in turbine trip. The turbine disk design is based on the turbine disk design criteria in Standard Review Plan 10.2.3, II.5 (11/75) and our extent of compliance is as follows:

a. The calculated overspeed upon a loss of load is less than 115% of rated speed. Adding 5% to this speed as required in SRP 10.2 gives approximately 120% of rated speed. The turbine rotor is designed and tested to 120% of rated speed.

b. The combined stresses of low pressure disks at design overspeed due to centrifugal forces, interference fit and thermal gradients do not exceed 0.75 of the minimum specified yield strength of the materials. Since the high pressure rotor is a solid forging and not a disk design the acceptance criteria in Section II.5 of SRP 10.2.3 does not apply.

c. The turbine shaft bearings are designed to withstand normal operating loads, anticipated transients or accidents resulting in turbine trip.

d. The rotors are designed so that the response levels at the natural critical frequency of the turbine shaft assemblies are controlled between 0 and 20 percent overspeed, so as to cause no distress to the unit during operation.

e. The rims of the low pressure disks can also be inspected. The keyways of the low pressure rotors can be inspected by means of ultrasonic techniques.

An evaluation has been made of the design, assembly and operating conditions of the low pressure turbine discs to assess the potential for stress corrosion cracking (Ref. 1).

The results of the evaluation demonstrated that the probability of stress corrosion cracking was low. However, to ensure against this event occurring, LP Turbine Discs are inspected at regular intervals and incorporated into the plant In-service Inspection Program.

10.2.4 EVALUATION

The turbine generator unit as well as other steam handling components of the Steam and Power Conversion System are not expected to contain significant radioactive concentrations. Only in the event of primary-to-secondary system leakage (due to a steam generator tube leak) is it possible for the SPCS to become radioactively contaminated. In this event, monitoring of condenser air discharge will detect any contamination. Full discussions of the radiological aspects of primary-to-secondary leakage including anticipated operational concentrations, of radioactive contaminants, means of detection of the environment can be found in Sections 11.1 and 11.5. Limiting conditions for operation are a part of the Technical Specifications.

A description of the protection provided by bypassing and dumping main steam to the condenser and atmosphere in case of sudden load rejection by the turbine generator is included in Subsection 10.4.4. A description of the protection provided by exhausting steam to the atmosphere through the main steam safety valves or atmospheric dump valves in the event of a turbine generator trip with coincident failure of the Steam Dump and Bypass System is provided in Subsection 10.3.2.

Refer to Subsections 11.2.5 and 11.3.5 for discussions of radiation concentrations and expected releases of radioactivity during operation. The anticipated operating radioactive concentrations in the system do not require shielding or access control in the Turbine Building.

Details of the fracture mechanics analysis techniques applied to the St. Lucie Unit 2 turbine are given in Reference 1.

10.2.5 TESTING AND INSPECTION

In-service inspection of the turbine-generator unit consists of periodic visual examinations. Other nondestructive testing includes magnafluxing of the rotors and blades. An ultrasonic examination of the low pressure turbine rotor discs is required at approximately 100,000 operating hour intervals provided no cracks are detected. Inspection intervals shall not exceed 12 years to allow adjustments for operating cycles based on Siemens Energy Inc. recommendations. Refer to Section 3.5.1.3 for a discussion on the justification for the 100,000 hour inspection interval.

The turbine throttle/stop, reheat stop and interceptor steam valves are tested in accordance with the requirements specified in Section 13.7.1.6.2. These valves are disassembled and inspected approximately every three and 1/3 years in accordance with the in-service inspection program,

REFERENCES: SECTION 10.2

1) CT-27455, Rev. 1, “Missile Report for FPL St. Lucie Units 1&2, BB281-13.9 m^2,” August 31, 2009, Siemens Energy, Inc.

TABLE 10.2-1

DESIGN DATA FOR TURBINE-GENERATOR

1.	Turbine	
	Throttle flow, max. rated, lb/hr	10,433,550
	Throttle flow, max. calculated, (VWO*) lb/hr	12,242,000
	Throttle pressure (rating/VWO)*, psig	840
	Steam moisture, max., percent	0.40
	Rating, max. guaranteed, KW	1,080,000
	Rating, max calculated, KW	969,587
	Turbine back-pressure, in. Hg abs	2.94” Hg
	No. of extractions	5
	Quality Group	D
2.	Generator	
	Rating, KVA	1,200,000
	Power factor	0.9
	Voltage, volts	22,000
	Rpm/Frequency/Phase, Hz	1800/60/3
	Hydrogen pressure, psig	75
	Quality group	D

*VWO Valves wide open

THIS TABLE HAS
BEEN DELETED

THIS TABLE HAS BEEN DELETED

Refer to Drawing
2998-G-056 SH 1

Amendment No. 18 (01/08)

FLORIDA POWER & LIGHT COMPANY
ST. LUCIE PLANT UNIT 2

HEAT BALANCES

FIGURE 10.2-1

Refer to Drawing
2998-G-056 SH 2

Amendment No. 18 (01/08)

FLORIDA POWER & LIGHT COMPANY
ST. LUCIE PLANT UNIT 2

HEAT BALANCES

FIGURE 10.2-2

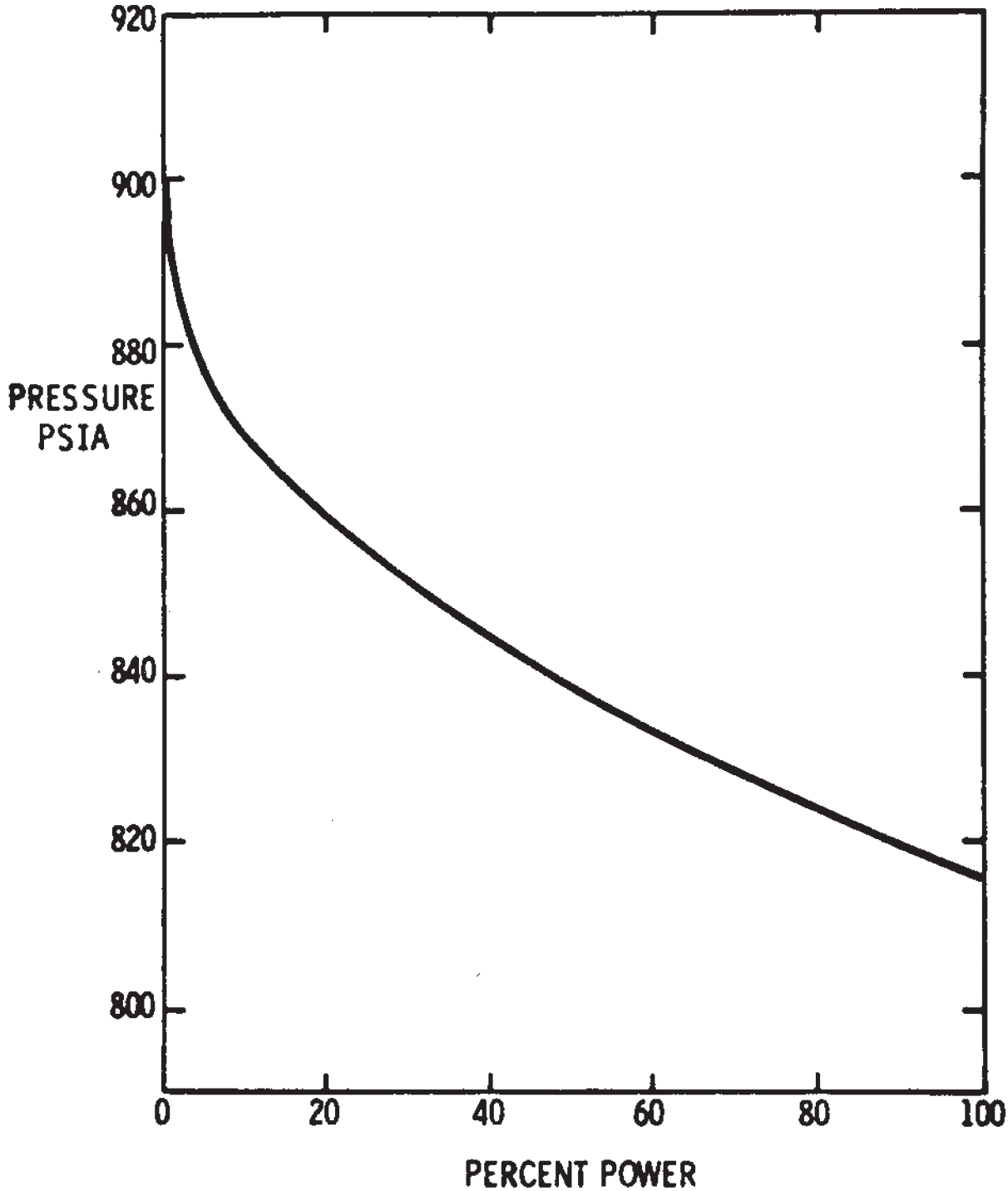

FLORIDA POWER & LIGHT COMPANY
ST. LUCIE PLANT UNIT 2

STEAM PRESSURE VARIATION
WITH POWER
FIGURE 10.2-3

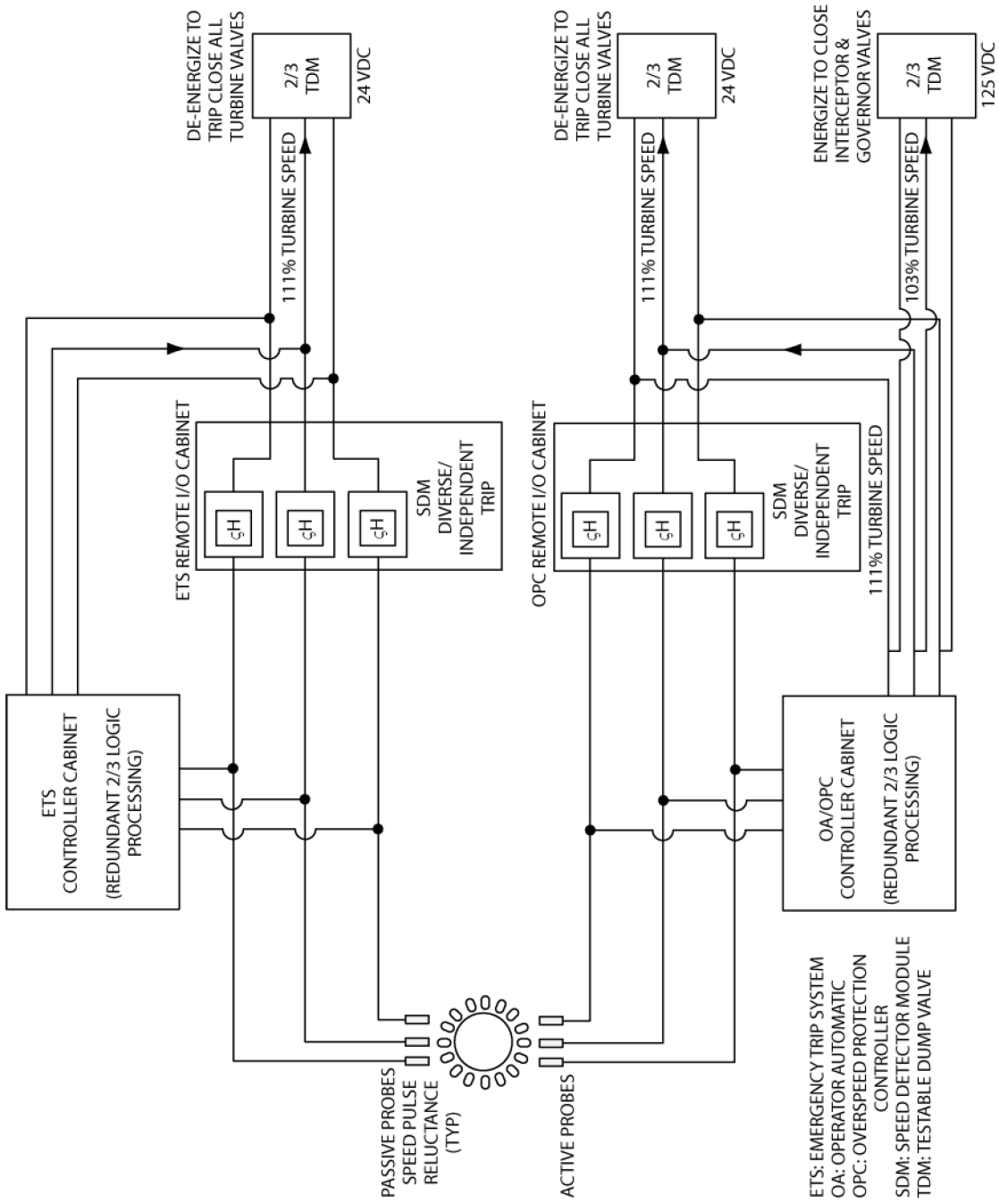

FLORIDA POWER & LIGHT COMPANY
ST. LUCIE PLANT UNIT 2

TURBINE OVERSPEED PROTECTION ELECTROHYDRAULIC SYSTEM

FIGURE 10.2-4

Amendment No. 21 (11/12)

THIS FIGURE HAS BEEN DELETED

FLORIDA POWER & LIGHT COMPANY
ST. LUCIE PLANT UNIT 2

MECHANICAL TURBINE OVERSPEED PROTECTION SYSTEM

FIGURE 10.2-5

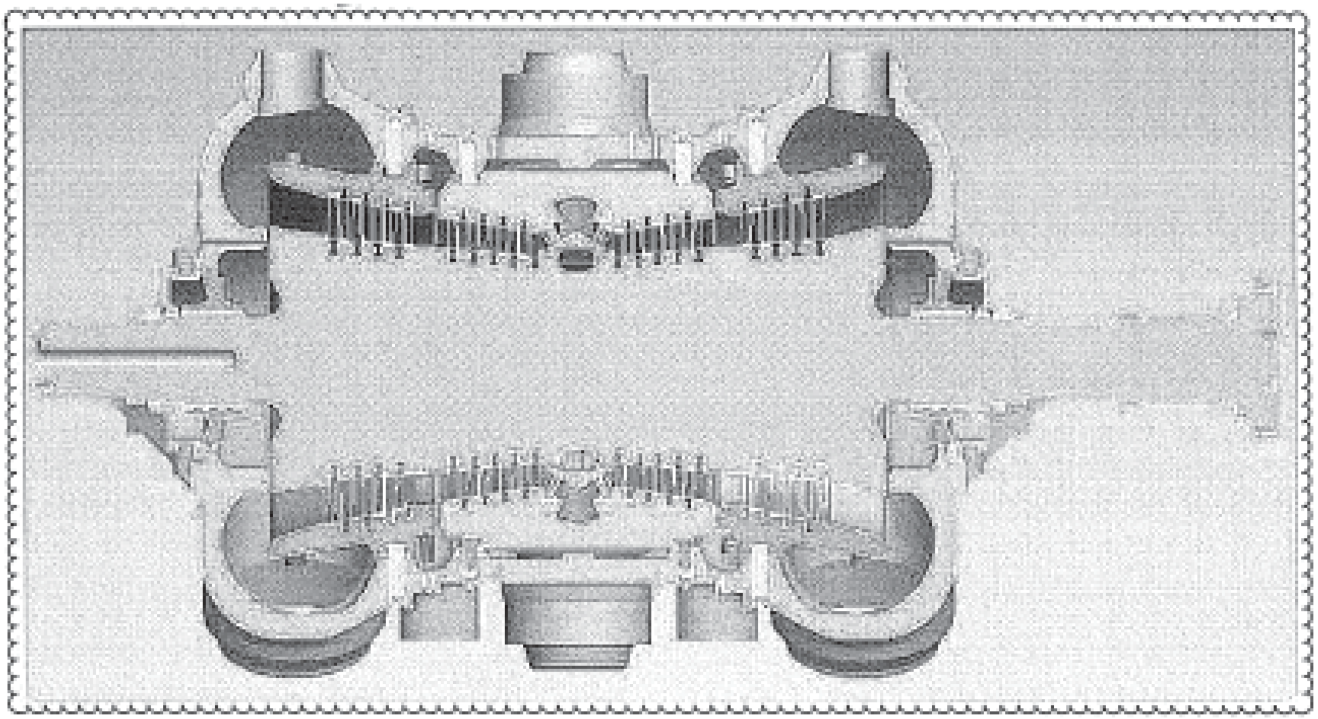

FLORIDA POWER & LIGHT COMPANY
ST. LUCIE PLANT UNIT 2

TURBINE HIGH-PRESSURE ELEMENT
1800-RPM Double Flow Design
FIGURE 10.2-6

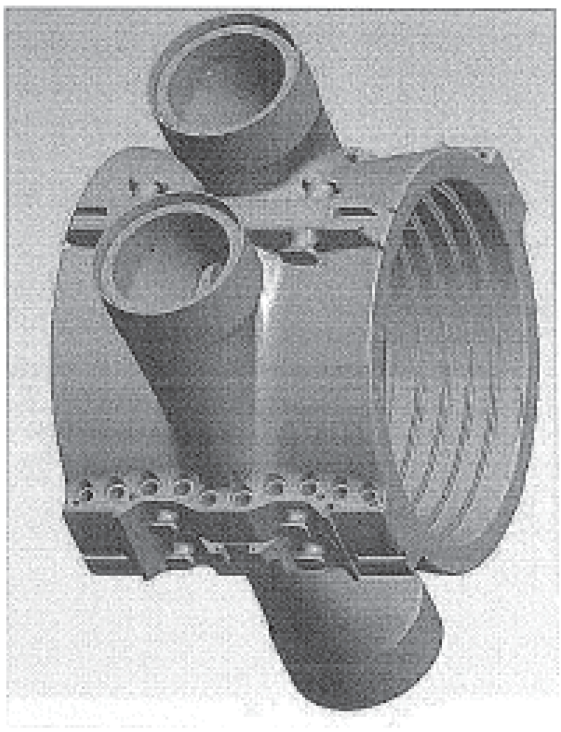

Inner Casing

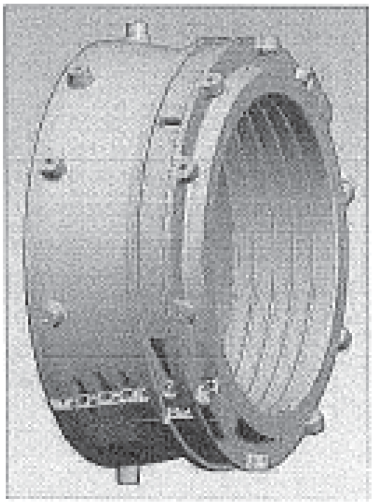

Guide Blade Carrier (Gov. End)

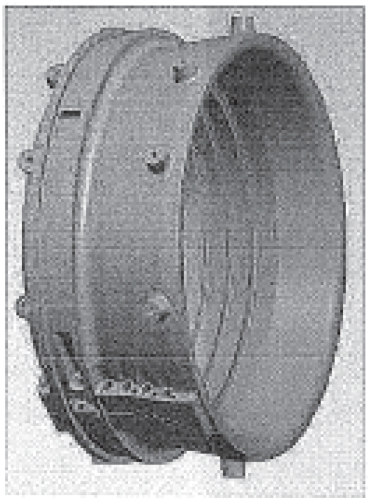

Guide Blade Carrier (Gen. End)

FLORIDA POWER & LIGHT COMPANY
ST. LUCIE PLANT UNIT 2

TURBINE INNER CASING AND
GUIDE BLADE CARRIERS

FIGURE 10.2-7

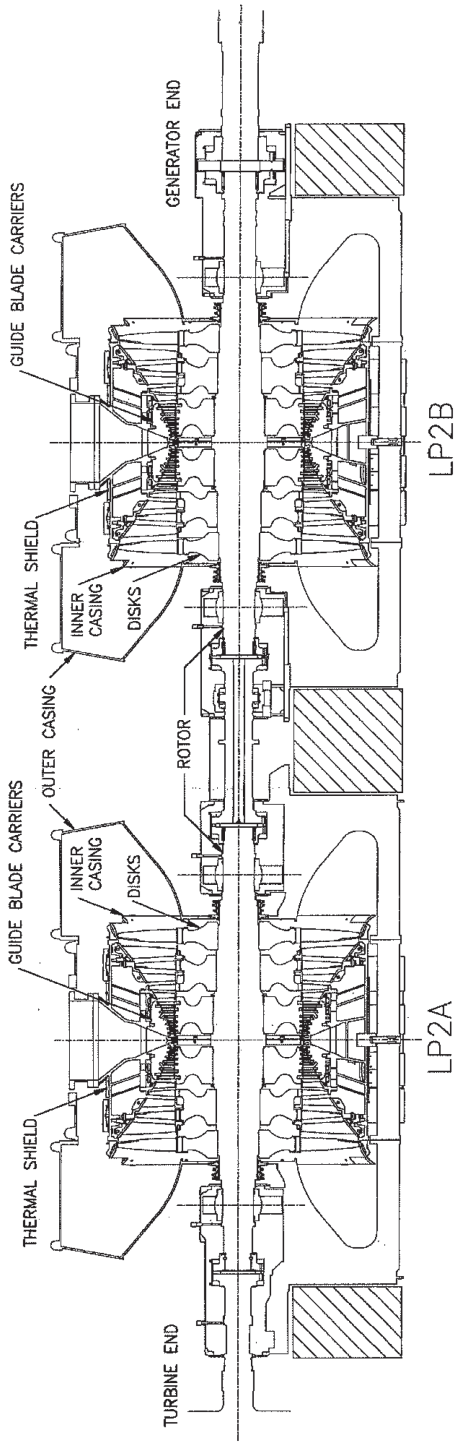

FLORIDA POWER & LIGHT COMPANY
ST. LUCIE PLANT UNIT 2

LOW PRESSURE ELEMENT
1800 RPM DOUBLE-FLOW DESIGN
FIGURE 10.2-8

Amendment No. 20 (05/11)

THIS FIGURE HAS
BEEN DELETED

Amendment No. 20 (05/11)

FLORIDA POWER & LIGHT COMPANY
ST. LUCIE PLANT UNIT 2

TYPICAL LP CYLINDER

FIGURE 10.2-9

Refer to Drawing
2998 – G – 086 SH 2

Amendment No. 18 (01/08)

FLORIDA POWER & LIGHT COMPANY
ST. LUCIE PLANT UNIT 2

FLOW DIAGRAM
TURBINE LUBE OIL SYSTEM

FIGURE 10.2-10

Refer to Drawing
2998 – G – 086 SH 3

Amendment No. 18 (01/08)

FLORIDA POWER & LIGHT COMPANY
ST. LUCIE PLANT UNIT 2

FLOW DIAGRAM
TURBINE LUBE OIL SYSTEM

FIGURE 10.2-11

10.3 MAIN STEAM SUPPLY SYSTEM

The Main Steam System is designed to convey steam generated in the two steam generators through the containment vessel in two separate lines to the high pressure turbine and to other auxiliary equipment for power generation. Portions of the Main Steam System provide both normal and safety related functions.

The following portions of the Steam and Power Conversion System are designated safety-related and designed to seismic Category I requirements.

a. Main Steam: The main steam discharge piping from the steam generator up to and including the main steam isolation valves is designed to Quality Group B requirements.

b. The main steam supply for the auxiliary feedwater pump turbine, from the steam generators to the outermost containment isolation valves, is designated Quality Group B.

While this section addresses the entire Main Steam System, emphasis is placed on the safety-related portion of the system.

The extended power uprate impact on the Main Steam System has been analyzed and the system parameters have been added to Table 10.3-7. The uprate increases the velocity in the system piping and the existing pipe size has been determined to be adequate. Because of the extended power uprate, the moisture separator reheaters have been replaced and the capabilities of selected Heater Drain System valves, including the MSR tube drain control valves, have been increased to pass the required flow rates.

10.3.1 DESIGN BASES

The safety-related portions of the Main Steam System have the following design bases:

a. Provide containment isolation in the event of a loss of coolant accident.

b. Prevent uncontrolled blowdown of both steam generators in the event of a steam line break accident.

c. Provide decay heat removal for the Reactor Coolant System in the event of a loss of offsite power.

d. Provide over-pressure protection for the steam generators and Main Steam System.

e. Withstand the adverse environmental effects of tornadoes, hurricanes, and flooding. Environmental qualification is referenced in Section 3.11.

f. Withstand pipe rupture effects as discussed in Section 3.6.

g. Withstand externally generated missiles as discussed in Section 3.5.

h. Provide source of steam supply to the auxiliary feedwater pump turbine during normal and post accident cooldowns.

The design bases for the safety-related instrumentation in the Steam and Power Conversion System are described in the following sections:

1. Main Steam Supply System (Sections 10.3 and 7.3)
2. Condensate and Feedwater System (Subsection 10.4.7 and Section 7.3)
3. Auxiliary Feedwater Systems (Subsection 10.4.9 and Section 7.3)
4. Steam Generator Blowdown System (Subsection 10.4.8 and Section 7.7)

The criteria and basis of the normal operation instrumentation (non-safety) of the Steam and Power Conversion System is discussed in Subsections 7.7.1.1.4, 7.7.1.1.5 and 7.7.1.1.10.

Sufficient instrumentation for the Main Steam Supply, Feedwater and Condensate Systems is provided to allow the operator to properly operate these systems. The instrumentation consists of appropriate pressure, temperature and flow measuring devices to adequately monitor these systems both locally and from the control room.

10.3.2 SYSTEM DESCRIPTIONS

The Main Steam System is shown in Figure 10.1-1. Design data is given in Table 10.3-1.

Each of the two steam generators supplies steam to the turbine through a separate 34 inch O.D. main steam line. The main steam line containment penetrations are designed with the flexibility to accommodate the expansions and contractions of the containment vessel (see Subsection 3.8.2). The steam lines, which are anchored on the outside of the penetration assemblies have enough flexibility to accommodate the expansion and contractions of the steam generators and the lines up to the anchor point. At the turbine, each of the two main steam lines terminate into a common header which feeds the four admission inlets to the turbine. The high pressure turbine inlet has four automatic turbine stop valves and four governing control valves.

Each main steam line is provided with a flow venturi, eight main steam safety relief valves, one main steam isolation valve and two atmospheric dump valves. The steam supply lines to the auxiliary feedwater pump turbine are taken from each main steam line upstream of the main steam isolation valve (MSIV).

The following MS motor operated valves are subject to the requirements of NRC Generic Letter 89-10; MV-08-1A, MV-08-1B, MV-08-12, MV-08-13, MV-08-14, MV-08-15, MV-08-16, MV-08-17, MV-08-18A, MV-08-18B, MV-08-19A, MV-08-19B, and MV-08-3.

The Main Steam System is designed to remove the heat generated in the Nuclear Steam Supply System (NSSS) during the plant startup, hot standby, hot shutdown, and normal cooldown, and was originally designed to permit load reductions of up to 45 percent load without reactor trip by the use of the steam dump & bypass control system (SBCS).

During normal startup, shutdown, and load change operations, the SBCS uses the condenser as a heat sink and main steam is not released to the atmosphere. The SBCS consists of four dump lines and one bypass line. These lines connect to the steam lines going to the moisture-separator/reheater tube bundles and discharge through control valves to the condenser. If a large rapid reduction in power demand occurs, the SBCS bypasses a combined capacity of

greater than 45 percent of the steam to the condenser to help mitigate the transient. If the condenser is not available, the turbine bypass valves are blocked closed and steam is exhausted to the atmosphere through the atmosphere dump valves or main steam safety valves. If the condenser is not available on large load reductions, the main steam safety valves will open.

The main steam safety valves are direct acting, spring loaded, open bonnet carbon steel valves. The main steam safety valves are flange mounted on each of the main steam lines upstream of the steam line isolation valves, and outside containment. A schematic drawing of the main steam safety valves is given in Figure 10.3-1. The main steam safety valve design data is given in Table 10.3-1.

The main steam line isolation valves are air operated Y-type bidirectional balanced stop valves. The valve is located outside the reactor containment structure and as near to it as practical. The isolation valve closes to prevent steam from flowing from the steam generator to the turbine inlet manifold and to prevent backflow if the steam generator pressure drops below the turbine inlet manifold pressure. The valve is shown on Figure 10.3-2.

The increased main steam flow parameters due to EPU (Table 10.3-7) are still within the design capabilities of the valve. Because of the increase in mass flow due to EPU, the steam velocity through the system is higher and thereby the pressure drop across the valve will be higher than before. Additionally, since there is no change in the Main Steam Safety Valve Set Point of 985 psig (1000 psia), the valve design criterion of closing within 5.6 seconds at 1000 psi differential is still acceptable. The valve full closure time is 6.75 seconds which is the 5.6 seconds maximum allowable valve stroke time plus 1.15 seconds for maximum allowable instrument response time.

Hence, it is concluded that the MSIVs are acceptable for EPU operation without any design changes.

The design parameters for the atmospheric dump valves are provided in Table 10.3-1, while the performance requirements are provided in Subsection 10.4.9 and Figure 10.4-9. Both atmospheric dump valves and main steam safety valves are designed in accordance with ASME code Section III, code Class 2 requirements. The design parameters for the MSIV (including design capacity, pressure, temperature, codes) is provided in Table 10.3-1.

The main steam piping (including flow elements, safety relief valves, atmospheric dump valves, and isolation valves for steam to the auxiliary feedwater pump turbine) up to and including the main steam isolation valves outside containment are safety related and are designed to meet seismic Category I and ASME Code Section III, code Class 2 requirements. Piping from downstream of the isolation valves to the Auxiliary feedwater pump turbine stop valve is designed to meet seismic category I and ASME Code, Section III, Code Class 3 requirements. The remainder of the main steam piping downstream of the main steam isolation valves is classified as non-safety related piping and is designed to meet the requirements of ANSI B31.1.

All other valves and components in the Main Steam System are designed and fabricated in accordance with manufacturers standards and, where applicable, in accordance with ASME Code, Section VIII, AWS, IEEE, NEMA, and OSHA.

The two main steam lines are joined to a common header at the turbine inlet. Steam from the common header is supplied to the high pressure turbine leads, four moisture-separator/reheater

assemblies, turbine gland sealing system, Auxiliary Steam System, steam jet air ejectors, and water box priming ejectors. Each steam turbine lead has an automatic turbine stop valve and a steam turbine governing control valve upstream of the turbine. The feedwater heaters do not receive steam directly from the steam generators but from extraction from various stages of the turbine.

The Main Steam System is also designed to provide an assured source of steam via a four inch branch line from each of the main steam lines for the turbine driven auxiliary feedwater pump 2C. The two branch lines are formed upstream of the main steam isolation valves and are headered just before the auxiliary turbine inlet. Refer to Table 10.3-2 for a tabulation of the branches from the main steam lines and for a listing of the various extraction line to the feedwater heaters.

The main steam isolation signal (MSIS) is a part of the Engineered Safety Features Actuation Signal (ESFAS) and is described in Section 7.3. Both main steam isolation valves close automatically on a MSIS, which is actuated on steam generator low pressure from either steam generator to prevent rapid flashing and blowdown of water in the shell side of the steam generator in the event of a steam line break, and thus avoid a rapid uncontrolled cooldown of the Reactor Coolant System. Automatic closure of both main steam isolation valves is also achieved by an MSIS signal actuated upon high containment pressure. The isolation valves prevent simultaneous release to the containment of the contents of the secondary sides of both steam generators in the event of the rupture on one main steam line inside the containment vessel, and by closing they also prevent backflow from the main steam header. The isolation valves can be remote manually operated from the control room.

The main steam and feedwater piping and support systems were evaluated to address EPU operating conditions. For main steam piping, these evaluations included an assessment of potential steam hammer loads resulting from turbine stop valve closure and main steam isolation valve closure events. For the feedwater system, these evluations included an assessment of potential water hammer loads resulting from feedwater regulating valve closure, feedwater isolation valve closure, and feedwater pump trip events. The main steam and feedwater piping and support system evaluations performed for EPU demonstrated that these systems are acceptable and will meet design basis allowable stress limits.

10.3.3 EVALUATION

The Main Steam System from the steam generators up to and including the main steam line isolation valves is designed as seismic Category I. This portion of the system provides a containment isolation function in the unlikely event of a design basis accident (DBA). Each main steam line isolation valve (MSIV) receives a closure signal upon main steam isolation signal (MSIS) actuation. Further information on the isolation function of this system is given in Subsection 6.2.4.

The Main Steam System is designed to prevent blowdown of both steam generators in the event of a postulated steam line break accident. If the break should occur upstream of the main steam line isolation valves, either of the low steam generator pressure signals or the high containment pressure signal will cause closure of the main steam line isolation valves. The system is designed such that no single active failure causes both isolation valves to remain open. If the break occurs upstream of the steam line isolation valve of a steam generator, blowdown of the other steam generator by backflow is prevented by the closure of the isolation

valve in the broken steam line. If the isolation valve fails to close, blowdown of the intact steam generator is prevented by the steam isolation valve in the unbroken steam line.

A single failure of one MSIV during a postulated main steam line break does not cause uncontrolled blowdown of more than one steam generator. For containment peak pressure/temperature analyses, the MSIV failure is postulated to occur at the faulted steam generator. This allows the steam inventory between the faulted steam generator and the closed MSIV, and all non-isolated volumes to expand into the containment. Additionally, the feedwater inventory between the main feedwater isolation valve and the faulted steam generator is assumed to flow into the steam generator and is released into the steam generator and is released into containment. Isolation of the turbine is assured by the quick acting fail closed characteristics of the turbine stop valves, and, is backed up by the closure of the turbine governor valves. Main steam and feedwater line inventories are shown in Figure 6.2-33. All additional steam and feedwater blowdowns resulting from a MSIV failure were considered in accident analyses and shown to result in peak pressures within containment design. The operable MSIV isolates the intact steam generator providing the cooling path necessary for safe reactor shutdown.

During original licensing, the NRC requested FPL to provide additional information concerning MSLB events. The following information in this paragraph was presented in response to NRC question 430.54 and is retained for historical purposes. Should the MSIV on the intact steam generator fail to close the turbine stop and governor valves, in conjunction with the operable MSIV, provide steam generator isolation. Under this condition however, certain auxiliary equipment continue to demand steam after the turbine trip and Main Steam Isolation Signal. The equipment and their steam requirements are shown in Table 10.3-5. This table indicates that the maximum expected steam flow, including that the Turbine Driven AFWP, is well within the minimum capability of any of the Auxiliary Feedwater Pumps. Thus, even with the failure of the MSIV on the intact steam generator, generator level can be maintained and reactor cooldown initiated. Although not required, operators can elect to isolate non-essential steam demands at any time.

The main steam isolation valves are capable of stopping steam flow in either direction against full differential pressure of 1000 psi. The MSIV's close in a maximum of 5.6 seconds thereby providing containment isolation. The valve full closure time is 6.75 seconds which is the 5.6 seconds for maximum allowable valve stroke time plus 1.15 seconds for maximum allowable instrument response time. The MSIV's and their accessories required to perform containment isolation (i.e., solenoid operators, air supply accumulators, and the control systems) are designed to perform their safety function subsequent to a safe shutdown earthquake. The isolation valves fail in the open position on loss of electric power to the solenoid valve, and in the closed position on loss of air supply. An air accumulator, designed seismic Category I, is provided to hold the stop valves open for at least eight hours after a loss of normal air supply, unless the valves are tripped or closed. The isolation valves have limit switches for valve operation and open/close position indication in the control room. The pressure switch will initiate an alarm in the control room in the event of low pressure in the air accumulator system. The trip circuitry and logic for the main steam isolation valves is discussed further in Section 7.3.

The Nuclear Steam Supply System has the capability of accepting a step load change of 10 percent and a ramp load change of five percent per minute. The rate of electrical load change of the turbine generator is restricted to these values although it has the capability of accepting load changes at a faster rate. These load change rates can be accomplished without the use of the Steam Dump & Bypass Control System (SBCS).

The SBCS consists of five air operated globe valves with a combined capacity of greater than 45 percent of the full power main steam flow. These valves are automatically initiated upon a high pressure in the steam generator in order to avoid lifting of the main steam safety valves. The system is designed to automatically accept a maximum loss of electrical load on the generator of greater than 45 percent of full power.

The Atmospheric Dump Valve System consists of four Drag Type valves (two per steam generator) with a total combined capacity of approximately 10 percent of the full power main steam flow. The ADV's are not automatically initiated upon high steam generator pressure. The Atmospheric Dump System has remote-manual capability from the control room in order to bring the plant from hot standby conditions to the Shutdown Cooling System entry temperature.

Two atmospheric dump valves (ADVS) each of 50 percent capacity are connected to each main steam line upstream of the steam line isolation valve and are operated manually from the control room. ADVs are ASME III, Safety Class 2 and are fully qualified to function from the control room during and after a safe shutdown earthquake. Each is dual powered by independent sources of safety grade onsite AC and DC electric power. Each ADV is designed for both remote manual and automatic operation from the control room. The MSIV and ADV arrangement have the capacity to dissipate decay heat at the power level existing immediately following reactor shutdown with an adequate margin to initiate cooling at 75 F/hr (analyzed cooldown rate) down to approximately 350 F. Using two valves, the plant can be cooled down to 350 F in about 3 1/2 hours. EC290592

The Main Steam System piping is arranged and restrained such that a rupture of one steam line cannot cause rupture of the other steam line, cannot damage containment, or prevent reactor system residual heat removal through the intact steam generator. This is done by placing of pipe whip restraints and a guard pipe around the main steam line as it penetrates the containment. Further discussion of the design and analysis of the main steam line piping is given in Section 3.6.

Safety related components in the Main Steam System are designed to perform their intended safety function in the normal and accident environment (temperature, pressure, humidity, and radiation) to which they may be subjected. Environmental design bases and qualifications are discussed in Section 3.11.

10.3.4 INSPECTION AND TESTING REQUIREMENTS

Inspection and testing, including hydrostatic tests and leakage tests, are performed for all valves at the manufacturer's shops in accordance with applicable codes. The Main Steam System is hydrostatically tested in the field after installation in accordance with applicable codes.

The components are given preoperational and functional tests to ensure that they will perform in accordance with design. The closure times of the main steam isolation valves are determined during the preoperational test of the Main Steam System. This is accomplished by measuring the elapsed time from the generation of the main steam isolation signal until the valve is closed. This test is repeated during the life of the unit as described in the Technical Specifications. Preoperational testing is further discussed in Chapter 14.

Since all insulation on the main steam lines is removable, each main steam line weld is accessible for inservice inspection. Refer to Subsection 3.8.2.1.1.1 for a discussion of inservice inspection of the welds in that portion of the main steam line which is part of the containment

piping penetration assembly. Guard pipes are provided on main steam piping between the secondary shield wall and containment vessel. These guard pipes are removable to facilitate inservice inspection of this piping.

10.3.5 SECONDARY WATER CHEMISTRY

10.3.5.1 Chemistry Control Basis

Steam generator secondary side water chemistry control is accomplished by:

a. Control of Feedwater purity to limit the amount of impurities introduced into the steam generator

b. Minimize Feedwater oxygen content prior to entry into steam generators

c. Chemical addition to establish and maintain an environment which minimizes system corrosion

d. Continuous steam generator blowdown to reduce concentration effects within steam generator

e. Condensate polisher filter demineralizer (CPFD) system use

Secondary water chemistry is based on the zero solids treatment method. This method employs the use of volatile additives to maintain system pH and to scavenge dissolved oxygen present in the feedwater.

An Oxygen scavenger, such as Hydrazine, is injected continuously into the secondary system to scavenge dissolved oxygen present in the feedwater and to promote the formation of a protective oxide layer on metal surfaces by keeping these layers in a reduced chemical state. An excess amount of hydrazine is maintained in the feedwater which thermally breaks down into the amine ammonia (ammonium hydroxide) within the steam generators. Since ammonia is volatile, it carries over with the steam and does not concentrate in the steam generator. Ammonia reaches an equilibrium level and establishes an alkaline condition in the steam generators and Condensate and Feedwater Systems. Oxygen scavengers (i.e., Hydrazine and/or Carbohydrazide) are also added to the steam generators during wet layup.

Secondary side pH is controlled to minimize general corrosion of ferrous material, reduce flow-accelerated corrosion and ultimately to minimize corrosion product transport to the steam generators and reduce secondary system component degradation. Neutralizing amines other than ammonia can also be injected to establish and optimize alkaline conditions. Amine additions may not be necessary during operation due to the ammonia produced from the decomposition of hydrazine. Amines may be used for pH control during wet lay-up of the steam generators and/or wet lay-up of secondary systems. Amines may also be used for pH control during plant startup.

A combination of amines is generally used to establish an effective pH control program throughout the steam, condensate and feed cycle. Dimethylamine (DMA) may be added to the secondary system to aid removal of sludge deposits from the steam generators and improve feed train pH control. DMA and ammonia have similar volatilities but may not be optimum for controlling pH and minimizing corrosion in wet steam areas. Ethanolamine (ETA) provides more

effective pH control in wet steam areas and during plant startup and transients when ammonia levels may not yet be properly established in the feed train.

Operating and non-operating modes' chemistry limits, specifications and Action Levels for the steam generators, Feedwater System and Condensate System are established and maintained in accordance with EPRI PWR Secondary Water Chemistry Guidelines, and controlled by plant procedures.

The limits provide high quality chemistry control and yet permit operating flexibility. The normal chemistry conditions can be maintained by any plant operating with little or no condenser leakage. The action level limits are defined in the PSL Chemistry and Operations procedures to define levels of plant response when monitored parameters are observed and confirmed to be outside the normal operation value.

Polyacrylic Acid may be added to inhibit the ability of iron oxide particles to agglomerate on the secondary side of the steam generator tubes. EC284033

10.3.5.2 Corrosion Control Effectiveness

Alkaline conditions in the feed train and the steam generator reduce general corrosion at elevated temperatures and decrease the release of soluble corrosion products from metal surfaces. These alkaline conditions promote the formation of a protective metal oxide film and thus reduce the corrosion products released into the steam generator.

Some oxygen scavengers also promote the formation of a metal oxide film by the reduction of ferric oxide to magnetite. Ferric oxide may be loosened from the metal surfaces and be transported by the feedwater. Magnetite, however, provides an adhesive, protective layer on carbon steel surfaces. Some oxygen scavengers also promote the formation of protective metal oxide layers on copper surfaces.

The use of boric acid to reduce the effects of steam generator tube denting and intergranular attack in steam generator crevices caused by a caustic environment has been found effective in the EPRI/NP-6237 PWR Secondary Water Chemistry Guidelines Rev 2, 12/88. A low power soak with 50 ppm boron followed by normal operation with 5-10 ppm in the steam generator blowdown is recommended if the steam generators exhibit these tube degradation mechanisms.

Wet layup of the steam generators during outages with chemically treated water is performed to minimize corrosion and oxidation during the layup period. Protection is provided by an amine for pH control and an oxygen scavenger to maintain a protective oxide film and a reducing environment.

The removal of oxygen from the condensate and feedwater is essential in reducing corrosion. Oxygen dissolved in water causes corrosion that can result in pitting of ferrous metals, particularly carbon steel. Oxygen is removed from the steam cycle condensate in the main condenser deaerating section. Additional oxygen protection is obtained by chemical injection of an oxygen scavenger into the condensate stream. Maintaining a residual level of oxygen scavenger in the feedwater ensures that any dissolved oxygen not removed by the main condenser is scavenged before it can enter the steam generator.

The presence of free hydroxide (OH) can cause rapid caustic stress corrosion if it is allowed to concentrate in a local area. Free hydroxide is avoided by maintaining proper pH control, and by minimizing impurity ingress into the steam generator.

Zero solids treatment is a control technique whereby both soluble and insoluble solids are excluded from the steam generator. This is accomplished by maintaining strict surveillance over the possible sources of feed train contamination (e.g., main condenser seawater leakage, air inleakage and subsequent corrosion product generation).

In addition to minimizing the sources of contaminants entering the steam generator, continuous blowdown, described in Subsection 10.4.8, is employed to minimize their concentration. With the low solid levels which result from employing the above procedures, the accumulation of scale and deposits on steam generator heat transfer surfaces and internals is limited. Scale and deposit formations can alter the thermal hydraulic performance in local regions to such an extent that they create a mechanism which allows impurities to concentrate to high levels, and thus could possibly cause corrosion. Therefore, by limiting the ingress of solids into the steam generator, the effect of this type of corrosion is reduced.

Because they are volatile, the chemical additives will not concentrate in the steam generator, and do not represent chemical impurities which can themselves cause corrosion.

10.3.5.3 Chemistry Control Effects on Iodine Partitioning

System design and operating practices are directed toward the goal of corrosion protection which at the same time provides an excellent environment for the suppression of iodine emissions in steam. Secondary water chemistry will suppress the formation of volatile species of iodine in the steam generators and convert volatile iodine that may be carried over via primary to secondary leakage to nonvolatile iodine compounds.

As demonstrated in CE Topical Report entitled "Iodine Decontamination Factors During PWR Steam Generation and Steam Venting" (References 1 and 2), iodine carryover in the steam generators is a function of moisture separator performance.

10.3.5.4 Secondary Water Chemistry Surveillance

Secondary Water Chemistry Surveillance is performed utilizing the Secondary Sampling System described in Subsection 9.3.2. Sample point locations and chemistry parameters sampled are dictated by plant procedures.

The Chemistry Manager is the authority responsible for data interpretation and forwarding recommendations for corrective action to the shift supervisor. When predetermined setpoints (as defined by the plant procedures) are exceeded the shift supervisor decides on the corrective action.

10.3.5.5 Condensate Polisher Filter Demineralizer (CPFD) System

The Condensate Polisher Filter Demineralizer (CPFD) System is designed to filter and deionize 15,840 GPM of condensate. The CPFD System is comprised of five filter/demineralizer units, a backwash pump, a resin precoat subsystem, an air subsystem, and a battery of isolation valves. Each filter/demineralizer unit is sized to handle maximum flow rate of 5,100 GPM and is made up of a Powdex vessel, resin trap and holdup pump. Condensate is directed through the

Powdex vessels, through the resin trap, and then back to the condensate system. The resin trap removes any resin that may have entered the condensate flow when it passed through the Powdex vessel.

Two 24 inch headers (influent and effluent lines) connect the Condensate Polisher Demineralizer System (CPFD) with the existing condensate piping system. Condensate is normally diverted to the CPFD system prior to and during plant start-up. It also may be used during normal plant operation. The system can be connected to serve either Unit 1 or Unit 2 but not both at the same time.

Administrative controls will preclude the operation of the Backwash Treatment System if the resin becomes radioactive. However, the Backwash Treatment System is equipped with emergency provisions to handle potentially radioactive resin. After the spent resin is collected in the backwash receiver tank, the heavier solids are allowed to settle to the bottom of the tank. At a preset level in the backwash receiver tank, the backwash recovery pump will start to decant the water and process it through the PHP filter where it is cleaned of any fine resin particles. The solids settled at the bottom of the backwash receiver tank are then processed through a portable radioactive waste solidification system. (The portable radioactive waste solidification system is not within the scope of the condensate polisher system).

10.3.6 STEAM AND FEEDWATER MATERIALS

10.3.6.1 Fracture Toughness

The Quality Group B and C piping materials in the steam and feedwater systems are designed and fabricated in accordance with the requirements of Subsections NC and ND, respectively, of ASME Section III, 1971 Edition through Summer 1973 addenda.

The main steam and feedwater piping penetration assemblies are designed and fabricated in accordance with Subsection NE (class MC) of ASME Code, Section III, 1971 Edition, Winter 1973 addenda. Fracture toughness testing for these penetration assemblies is performed in accordance with the applicable sections of this edition of the code.

All pressure retaining materials used in the design and fabrication of Quality Group B and C components of the main steam and feedwater systems are in compliance with ASME Code, Section III, Appendix I. The mechanical properties of materials specified for use on Quality Group B and C components are as indicated in ASME Code, Section II, Part A, B or C. The actual material specifications and applicable codes are provided in Table 10.3-1.

10.3.6.2 Materials Selection and Fabrication

Regulatory Guide 1.44, "Control of the Use of Sensitized Stainless Steel" is not applicable to the main steam and feedwater system. However, a complete discussion of Regulatory Guide 1.44 that is also applicable to this section is provided in Subsection 6.1.1.

Low-alloy steels are not utilized in any safety-related system and therefore, Regulatory Guide 1.50, "Control of Preheat Temperature for Welding of Low-Alloy Steel," is not applicable.

For Code Class 2 and 3 components, welder qualification for areas of limited accessibility does not conform with the recommendations of Regulatory Guide 1.71, "Welder Qualification for Areas of Limited Accessibility," Dec. 1973 (R0). However, the objective of the Regulatory Guide

is adhered to by using welding supervisors to monitor welders and place an experienced welder at limited access locations.

The delta ferrite content of welds in austenitic stainless steel components is controlled, as a minimum, in accordance with the essential requirements of MTEB 5-1, "Interim Regulatory Position of Regulatory Guide 1.31." A discussion that is also applicable to this section is provided in Subsection 6.1.1.

The use of non-metallic thermal insulation on austenitic stainless steel is in complete compliance with Regulatory Guide 1.36, "Nonmetallic Thermal Insulation for Austenitic Stainless Steel," as outlined in Section 6.1 and is also applicable to this section.

See Subsection 6.1.1 for compliance with Regulatory Guide 1.37, "Quality Assurance Requirements for Cleaning of Fluid Systems and Associated Components of Water Cooled Nuclear Power Plants," and ANSI N45.2.1-73, "Cleaning of Fluid Systems and Associated Components for Nuclear Plants." ASME NQA-1-1994, Subpart 2.1 was substituted for ANSI N45.2.1 as described in the FPL Quality Assurance Topical Report discussed in Section 17.2.

SECTION 10.3: REFERENCES

1. J A Martucci, Iodine Decontamination Factors During PWR Steam Generation and Steam Venting, Topical Report CENPD-67, Revision 1, Nuclear Power Department, Combustion Engineering, November 1974.

2. R E Mayer and E R D'Amaddio, Iodine Decontamination Factors During PWR Steam Generation and Steam Venting, Topical Report CENPD-67, Revision 1, Addendum 1, Nuclear Power Department, Combustion Engineering, November 1974.

TABLE 10.3-1

DESIGN DATA FOR MAIN STEAM SYSTEM
PIPING AND VALVES

1. Piping

Design Pressure psig	985
Design Temperature, °F	550

	Material	Codes
Main Steam*	ASME-SA-155, GR KC-65	ASME Section III, Class 2 1971 Edition, Summer 73 addenda
Main Steam to Auxiliary Feed Pump Turbine Inlet Valve	ASME-SA-106, GR B	ASME Section III, Class 2 1971 Edition, Summer 73 addenda
Balance of Piping	ASTM-A-155, GR KC-65 ASTM-A-106, GR B ASTM-A-335, GR P11 or P22	ANSI B31.1

2. Main Steam Isolation Valves (HCV-08-1A,B)

Type	Y-type bidirectional balances stop valves
Quantity	2, 1 per main steam line
Design Pressure, psia	1000
Design Temperature, °F	550
Materials:	
Body	ASME SA 216 GR WCC
Disc	Alloy Steel SA182 GR F11
Piston	Carbon Steel ASME SA 216 WCB
Stem	ASTM A-182, Gr F6A, CL 4
Disc & Body Seat Facing	Stellite 21
Code	ASME Section III, Class 2, (1974 edition including summer 1974 addenda).

*To first isolation valve outside containment.

TABLE 10.3-1 (Cont'd)

3. Main Steam Safety Valves

Design Pressure, psig	1025
Design Temperature, F	550
Fluid	Saturated Steam
Set Pressure, psig	985, 1025
Minimum Capacity, lb/hr (at 3% accumulation, each)	11.91×10^6 Total 16 valves
Type	Spring Loaded
Materials:	
Body	ASME SA 216, GR WCB
Disc	ASTM A458, GR 651 or equivalent
Nozzle	ASTM A477, GR 651 or equivalent
Orifice Area, in^2	16
Accumulation, %	3
Backpressure	
Max buildup/max superimposed, psig	25/0
Blowdown, % Maximum	8
Code	ASME Section III Class 2, 1974 edition.

4. Atmospheric Steam Dump Valves

Type	Control Valve
Quantity	Two per Main Steam Line
Operator	Motor operated with Dual AC/DC electric power
Design Press., psig	985
Design Temp., F	550
Capacity, lb/hr (at 40 psig)	54,000

TABLE 10.3-1 (Cont'd)

Capacity, lb/hr (at 970 psig)	275,000
Material	
Body	ASME SA 105
Disc	ASTM A 240-Type 410
Plug	ASME SA 182-Gr F11
Stem	ASTM A 276-Type 420
Code	ASME III, Safety Class 2, 1980 Edition No Addenda

5. Steam Dump and Bypass Valves

Type	Globe (DRAG Valve)
Quantity	4 steam dump, 1 bypass
Operator	pneumatic, direct acting
Design Pressure, psia	1015
Design Temperature, °F	550
Materials:	
Body	ASTM A216, GR WCB
Plug	ASTM A276, Type 410
Stem	17-4 PH
Code	ASME B16.34-2004

6. Steam Flow Elements (FE-8011, FE-8021)

Type	Venturi
Quantity	2
Pipe I.D., inches	31.09/31.13
Venturi Throat I.D., inches	20.40/20.40
Diameter Ratio	0.656/0.655
Area Ratio	0.430/0.430

TABLE 10.3-1 (Cont'd)

Materials	
Pipe	ASME-SA-155 GR KC-65 Class I
Venturi	ASME-SB-168 Inconel 600 at throat ASME-SA-515 GR 70 at inlet & outlet
Code	ASME Section III, Class 2, 1974 Edition, Winter 1974 Addenda

TABLE 10.3-2

MAIN STEAM LINE AND TURBINE EXTRACTION LINES

1. Auxiliary Feedwater Pump Turbine

Pipe size, in./schedule	4/80
Material	ASME SA-106 GR B
Design pressure, psig	985
Design temperature, F	550
Codes	ASME Section III, Class 2 1971 Edition, Summer 1973 addenda

2. Auxiliary Services

Pipe sizes, in./schedule	2,2.5,3,4,6/80
Material	ASTM A-106 GR B
Design pressure, psig	985
Design temperature, F	550
Code	ANSI B 31.1

3. Lines to Moisture Separator Reheaters

Pipe sizes, in./schedule	8/40, 16/80, 20/80
Material	ASTM A-106 GR B
Design pressure, psig	985
Design temperature, F	550
Code	ANSI B 31.1

4. Extraction to Heaters

	Heater 5	Heater 4	Heater 3	Heater 2	Heater 1
Line Size, in.	12/16	20	24	24(2)	32(4)
Wall Thickness, in.	0.375	0.375	0.375	0.375	0.375
Material	A106GRB A335P11 or P22	A106GRB & A335P22	A106GRB	A106GRB	A106GRB

TABLE 10.3-2 (Cont'd)

4. Extraction to Heaters (Cont'd)

	Heater 5	Heater 4	Heater 3	Heater 2	Heater 1
Design Pressure, psig	475	300	75	50	50
Design Temp, F	550	425	320	300	300
Code	ANSI B 31.1	ANSI B 31.1	ANSI B 31.1	ANSI B 31.1	ANSI B 31.1

TABLE 10.3-3

Deleted

TABLE 10.3-4

Deleted

TABLE 10.3-5

AUXILIARY EQUIPMENT STEAM REQUIREMENTS [1]

Branch-off Piping Function	Normal Max Steam Flow (Lbs/Hr).	Type of Valve/ Normal Position	Size of Valve (In)	Closure Time of Valve *(Sec)*	Source of Actuating Signal	Actuation Mechanism *of Valve*	Motive or Power Source of Valve	Quality Group of Valve	Design Code	Remarks
Four (4) Vent Lines to Atm.	0	Globe/ Closed	10x12	60	-	Motor	AC/DC	B	ASME III	Atmospheric Dump Valves (ADVs) are manually controlled to reject decay heat.
Sixteen (16) Relief Lines	0	Relief/ Closed	6x10	-	-	-	-	B	ASME III	Open only to relieve overpressure condition.
Steam to Turbine Driven AFWP	16,275*	Gate/ Closed	4	10	AFAS	Motor	DC	B	ASME III	Open on low Steam Generator Level to initiate Auxiliary Feedwater Flow.
Gland Steam Seal Supply	5,544	Self-regulating/ Open	4	-	-	Diaphragm	Air	D	ANSI B31.1	Self-regulating control valves maintain steam flow to Gland Sealing System.
Four (4) steam lines to Moisture Separator Reheatera (MSRs)	728,213	Globe/ Open	8	-	Reheater Temperature Controls	Diaphragm	Air	D	ANSI B31.1	Valves and controls designed to maintain reheat steam Temperature for LP turbine.
Five (5) Turbine Steam Bypass to Condenser	0	Globe/ Closed	4-10 1-8	3	High Steam Generator Pressure	Diaphragm	Air	D	ANSI B31.1	Valves and Controls are designed to maintain Steam Generator Pressure constant and avoid lifting of the Safety Refief Valves.
Ten (10) Main Steam Drain Lines Through Traps to Condenser	24,200	Globe/ Closed	1 1/2	-	-	-	-	D	ANSI B31.1	Only water (no steam) is drained to condenser. Flow is intermittent.

* After the initiation of the Auxiliary Feedwater Actuation Signal.

TABLE 10.3-5 (Cont'd)

Branch-off Piping Function	Normal Max Steam Flow (Lbs/Hr).	Type of Valve/ Normal Position	Size of Valve (In)	Closure Time of Valve *(Sec)*	Source of Actuating Signal	Actuation Mechanism *of Valve*	Motive or Power Source of Valve	Quality Group of Valve	Design Code	Remarks
		Globe/ Closed	2 1/2	-	-	-	-	D	ANSI B31.1	Used during startup to establish condenser vaccum.
Priming Ejectors	0	Globe/ Closed	2	-	-	-	-	D	ANSI B31.1	Used during startup only to deaerate condensate.
Aux Priming Ejectors	4,000	Globe/ Open	1	-	-	Diaphragm	Air	D	ANSI B31.1	Self regulating valve maintains condenser to deareate condensate.
Steam Jet Air Ejectors	3,130	Globe Open	1	-	-	Diaphragm	Air	D	ANSI B31.1	Self-regulating valve maintains condenser vaccum during normal. power operation.
Heating Steam to Waste & Boric Acid Concentrators	40,600	Globe/ Open	3	-	-	Diaphragm	Air	D	ANSI B31.1	Concentrators used only intermittently.

Note: Miscellaneous vents, drains & instrumentation taps, which are normally closed, are neglected.

Summary

Max. Steam Flow following Turbine Trip & failure
of Main Steam Isolation Valve to close:

Turbine Driven AFWP	16,275
Gland Seal System	5,544
Drain Lines	24,200
Aux Priming Ejectors	4,000
Steam Jet Air Ejectors	3,130
Concentrators	40,600
	93,749 Lbs/hr = 190 GPM

Note (1): Information in this table was provided to the NRC during original licensing (PSAR Amendment 14) in response to NRC question 430.54. This information is historical and has not been updated to reflect current plant configuration.

TABLE 10.3-6

Deleted

TABLE 10.3-7

MAIN STEAM/FEEDWATER PARAMETERS

MAIN STEAM	100% LOAD (2560 MWT) OSG	EPU (3040 MWT)
Flow (lbm/hr)	11,172,200	13,266,000
Pressure (psia)	815	888
Temperature (°F)	520.3	530
Specific Volume (ft^3/lbm)	.55776	0.5347
FEEDWATER		
Flow (lbm/hr)	11,172,200	13,364,000
Pressure (psia)	1256	1,120
Temperature	380.5	437

Refer to Drawing
2998-2381

FLORIDA POWER & LIGHT COMPANY
ST. LUCIE PLANT UNIT 2

MAIN STEAM SAFETY VALVES
V8201 - V8216 8770-993 2 SHS
FIGURE 10.3-1

Refer to Drawing
2998-1011

FLORIDA POWER & LIGHT COMPANY
ST. LUCIE PLANT UNIT 2

MAIN STEAM ISOLATION
VALVE SH 1 OF 9
FIGURE 10.3-2

DELETED

FLORIDA POWER & LIGHT COMPANY
ST. LUCIE PLANT UNIT 2

FIGURE 10.3-3

10.4 OTHER FEATURES OF THE STEAM AND POWER CONVERSION SYSTEM

This section describes the main condenser, main condenser evacuation system, gland seal system, Steam Dump and Bypass System, Circulating Water System, Condensate, Feedwater and Heater Drain Systems, Steam Generator Blowdown System and Auxiliary Feedwater System.

Except for a portion of the Feedwater System piping and the Auxiliary Feedwater System, the features, components, and systems described in this section serve no safety function.

10.4.1 MAIN CONDENSER

The main condenser serves no safety function and is classified as nonseismic. Refer to Figures 10.1-1 through 10.1-3 and the design data in Table 10.4-1. The two shell, single pressure, main condenser provides a continuous heat sink for the exhaust from the two tandem-compound low pressure turbines and for miscellaneous flows, drains and vents during normal plant operation.

The main condenser also provides a heat sink for the steam dump & bypass control system (SBCS) during the initial phase of plant cooldown (after reactor shutdown).

10.4.1.1 Design Bases

The main condenser is constructed in accordance with the Heat Exchanger Institute Standards for steam surface condensers.

The main condenser was originally designed to:

a. Condense 100 percent of the full load main steam flow and deaerate the condensate before it leaves the condenser hot well.

b. Condense at least 45 percent of the full load main steam flow bypassed directly to the condenser by the turbine bypass system, which bounds the steam dump and bypass control system capabilities as described in Section 7.7.1.1.5. This condition occurs in case of a sudden load rejection by the turbine generator, a turbine trip, or during start-up and shutdown, as described in Subsection 10.4.4.

c. Provide for removal of noncondensable gases from the condensing steam through the main condenser evacuation system, as described in Subsection 10.4.2.

10.4.1.2 System Description

The main condenser functions as the steam cycle heat sink and collection point for the following flows:

a. Low-pressure turbines exhaust.

b. Low-pressure turbines last stage moisture removal drains.

c. Feedwater heater drains and vents.

d. Steam seal regulator leak-off.

e. Gland steam condenser drains.

f. Condensate minimum flow recirculation.

g. Condensate pumps minimum flow recirculation.

h. Steam generator feedwater pumps minimum recirculation.

i. Feedwater recirculation start-up.

j. Turbine bypass.

k. Demineralized water makeup.

l. Miscellaneous equipment drains and vents.

The main condenser consists of two 50 percent capacity, divided water box, surface condensers of the single-pass type with tubes arranged perpendicular to the turbine shaft. Cooling water for the condensers is provided by, the Circulating Water System. The condensers are of the deaerating type and are sized to condense exhaust steam from the main turbine under full load conditions. The hot well storage is located below the bottom row of tubes in each condenser shell.

The condenser hot wells serve as a storage reservoir for deaerated condensate which supplies the condensate pumps. The storage capacity of the hot wells (41,000 gallons each), can provide sufficient feedwater for four minutes of operation at maximum throttle flow with some additional volume for surge protection. Condensate makeup from the condensate storage tank is admitted by gravity or by the condensate transfer pumps into the condenser. This automatic makeup is performed through a level control valve which receives a low water level signal from the condenser. There is a bypass valve around this level control valve for manual backup as well as for plant start-up filling. On high water level in one hot well, during normal plant operation, an airoperated valve is opened automatically to reject condensate to the condensate storage tank. Three condensate outlets from the shell are provided to the condensate pumps.

Each condenser shell is connected to two separate circulating water inlet and outlet line through its respective water box. The circulating water flow path is shown in Figure 9.2-1.

Two 8 inch diameter connections are provided on each shell for noncondensable gas evacuation. The design parameters (including air leakage requirements) for the main condenser Air Evacuation System are provided in Subsection 10.4.2.

A provision is made for mounting each of the one-half capacity low pressure heaters 1A/1B and 2A/2B in the neck of each of the condenser shells. A 36 inch diameter hot well equalizing pipe is provided between the two hot wells.

A 117 inch diameter crossover pipe is provided between the two condenser shells for equalizing the exhaust steam flow. Belt-type rubber expansion joints are provided for the exhaust connections from low pressure turbines.

The turbine by-pass blowdown lines discharge into the condenser through spray pipes located in the condenser neck at a level sufficiently higher than the condenser tubes. The spray pipes

help to diffuse the high energy discharge away from the tubes and thus preclude tube failures due to impingement. All other high temperature drains either discharge through spray pipes or baffles are provided to deflect the discharge away from the tubes and minimize impingement effect on condenser tubes.

10.4.1.3 System Evaluation

The main condenser is normally used to remove residual heat from the Reactor Coolant System (RCS) during the initial cooling period after plant shutdown when the main steam is bypassed to the condenser by the steam dump & bypass control system (SBCS). The condenser is also used to condense a portion of the main steam bypassed to the condenser by the turbine generator in the event of sudden load rejection or a turbine trip.

In the event of a load rejection greater than 45 percent (e.g., 100 percent load rejection due to turbine trip), the condenser will condense 45 percent of full-load main steam flow bypassed to it by the SBCS, and the motor operated atmospheric dump valves or spring loaded safety valves will discharge the remaining main steam flow to the atmosphere to effect safe reactor shutdown.

If the main condenser becomes unavailable during normal plant shutdown, sudden load rejection or turbine generator trip, the spring loaded safety valves will discharge full main steam flow to the atmosphere and effect a safe shutdown condition. Nonavailability of the main condenser considered here includes failure of circulating water pumps to supply cooling water, failure of condenser evacuation system to remove noncondensable gases, excessive leakage of air through turbine gland packings due to failure of the turbine gland sealing system, or failure of the condenser due to other reasons. If the turbine steam bypass valves to the main condenser are open, they will close automatically in the event of loss of condenser shell vacuum.

Failure of the condenser does not result in flooding of any safety related equipment.

During normal operation and shutdown, the main condenser does not contain radioactive contaminants. Radioactive contaminants can only be present through primary-to-secondary system leakage due to a steam generator tube leak. Non-condensable gases are monitored for radioactivity prior to being discharged to the atmosphere. The radiological aspects of primary-to-secondary leakage are discussed in Section 11.5. Anticipated operating concentrations of radioactive contaminants, is included in Section 11.3.

During normal plant operation gaseous hydrogen is not added to the secondary system. However, if there is primary coolant leakage in the steam generator tubes, minute quantities of gaseous hydrogen are carried over to the main condenser. As described in Subsection 10.4.2, the main condenser Air Evacuation System removes any noncondensable gases from the condenser. Therefore, no hydrogen buildup in the main condenser is anticipated.

Cooling water inleakage to the condenser is detected by conductivity detection equipment located in the Chemical Analyzer Cubicle (see Subsections 10.3.5 and 10.4.8). The affected condenser section is removed from service when inleakage is observed, drained of cooling water and the leaking tubes located and plugged. This condenser section is returned to service when repairs are completed. The main cause of inleakage of cooling water into the condenser is due to tube-to-tube sheet joint failure resulting from excessive vibration of tubes. In the St. Lucie Unit 2 condenser design, these problems are minimized by the following provisions:

a. Adequate number of tube support plates have been provided to minimize tube vibration.

b. Tubes are roller expanded into the tube sheet and the tube sheet is integrally grooved and provided with a pressurized water seal to prevent inleakage of cooling water into the condenser at the tube-to-tube sheet joint.

Measures are taken to prevent loss of vacuum in the condenser are as follows:

a. A continuous flow of cooling water is maintained through the condenser tubes by the four circulating water pumps, to condense the exhaust steam and all condensible gases flowing into the condenser from the LP turbine exhaust. This system is discussed in Subsection 10.4.5.

b. A continuously operating Air Evacuation System consisting of two hogging ejectors (for startup evacuation) and one steam jet air ejector originally designed for maintaining vacuum at 3.58" Hg during normal operation is provided. A discussion of this system is provided in Subsection 10.4.2.

c. A turbine gland sealing system is provided to prevent intrusion of atmospheric air into the turbine casing and the condenser. This system is discussed in Subsection 10.4.3.

d. Two steam operated auxiliary priming ejectors and a priming ejector are provided to evacuate and maintain the water seal in the condenser water boxes.

e. The condensate pumps which are connected to the condenser and operate under vacuum conditions are provided with water sealed glands to prevent intrusion of air through the glands into the condenser.

Measures are provided to minimize corrosion/erosion of condenser tubes and components, as follows:

a. Titanium tubes are used in the condenser, which has excellent corrosion resistance to sea water. The tube sheets are of aluminum bronze which has good corrosion resistance in sea water.

b. Cathodic protection is provided on the condenser water box to prevent galvanic corrosion between the carbon steel water box, the aluminum bronze tube sheet and the stainless steel components installed as part of the condenser tube cleaning system which are in contact with sea water.

c. A moderate water velocity (approximately 7 ft/sec) is maintained in the condenser tubes to prevent high velocity erosion of tubes. The condenser tubes are continuously cleaned with rubber sponge balls and periodically with carborundum coated sponge balls. Tests demonstrate that the titanium tubes are highly durable against mechanical cleaning methods including carborundum coated sponge balls.

d. Cooling water (sea water) is chlorinated and the tubes are continuously cleaned using rubber sponge balls to minimize biofouling and resultant corrosion of tubes.

10.4.1.4 Tests and Inspections

The surface condenser water boxes are shop tested hydrostatically to 30 psig. After installation, the condenser is tested for leak tightness by filling with water to a level above the turbine exhaust flange. Field tests run to demonstrate performance are governed by the provisions of ASME Power Test Code for Steam-Condensing Apparatus.

10.4.1.5 Instrumentation Applications

Water level gages are provided at the hotwells and level control devices for water level control are located at the condenser "2B" hotwell.

A sampling system measures the conductivity of the condensate to provide an indication of any condenser tube inleakage and high conductivity is annunciated in the Control Room.

Local indication of LP heater pressure and control room indication for monitoring pressures in the condenser shells are provided.

A hotwell water high and low water level alarm is provided in the control room. Condenser shell vacuum is indicated and annunciated on low vacuum in the control room. A loss or decrease of vacuum to 18-22 inches of mercury will trip the turbine and cause a reactor trip. This is discussed in Subsections 7.2.1.1.1 and 10.2.2.2.

10.4.2 AIR EVACUATION SYSTEM

The Air Evacuation System has no safety related function and is classified as nonseismic.

10.4.2.1 Design Bases

The Air Evacuation System (AES), shown on Figure 10.1-1f is designed to remove noncondensable gases and inleakage air from the steam space of the condenser shells during plant startup, cooldown, and normal operation.

10.4.2.2 System Description

The AES consists of two hogging ejectors, a steam jet air ejector with associated inter-and after-condensers, manifolds, valves and piping. The system is designed to establish and maintain condenser vacuum during startup and normal operation.

During startup, the two hogging ejectors evacuate a combined turbine and main condenser (empty hot well) steam space of 142,000 cu ft within a period of 60 minutes and thereafter maintain a condenser pressure of five inch Hg absolute. The steam-air mixture from the hogging ejectors is discharged to the atmosphere via discharge silencers. As startup progresses, condenser evacuation is maintained by the two stage, twin-element, steam jet air ejector. The steam jet air ejector was originally designed to achieve a condenser vacuum of 3.58 inch Hg absolute (abs) during normal operation.

Shop hydrostatic tests and field functional tests are performed on the main condenser to assure leak tightness. The entrapped air is removed from the condenser by the steam jet air ejector system. Each element of the steam jet air ejector system is capable of entraining 25 cfm of air at one inch Hg (abs) and 71.5 F when supplied with 1565 lbs/hr of main steam at 400 psig.

The steam jet ejector passes the evacuated mixture of air and water vapor through its inter-and after-condensers where most of the water vapor is condensed and the remaining noncondensable gases are discharged to the plant vent.

10.4.2.3 System Evaluation

The preclusion of the existence of an explosive mixture is inherent in the design of the condenser as hydrogen is not normally present. In the event of a primary to secondary steam generator leakage, small amounts of hydrogen may be released to the condenser and subsequently discharged to the atmosphere via the condenser evacuation system. Therefore, a noncondensable gas concentration capable of supporting combustible mixture is not considered credible.

The noncondensable gases from the steam jet air ejector are monitored for radioactivity prior to being discharged to the plant vent. The presence of radioactivity would indicate a primary to-secondary system leak in the steam generators (refer to Section 11.5). Radiological aspects of primary-to-secondary leakage and anticipated radioactive releases to the environment during normal operation of the system are discussed in Section 11.5.

Loss of condenser vacuum causes a turbine trip as discussed in Section 10.2.2.2.

10.4.2.4 Tests and Inspections

Preoperational testing insures the proper operation of valves and verifies the pressure switch setpoints.

Testing of the AES during normal operation is unnecessary since the system is being used. The system can be shut down for short periods of time during plant operation for inspection if required, without adversely affecting condenser performance.

10.4.2.5 Instrumentation Applications

A process radiation monitor continuously samples the Steam Jet Air Ejector noncondensable gas exhaust header. The presence of radioactivity would indicate a primary-to-secondary system leak in the steam generators. Gases are discharged through the plant vent.

10.4.3 TURBINE GLAND SEALING SYSTEM

The turbine gland sealing system provides sealing of the turbine shaft against leakage of air into the turbine casings and escape of steam into the Turbine Building. The system is shown on Figure 10.1-1b. The system has no safety related function, and is classified as nonseismic.

10.4.3.1 Design Bases

The turbine gland sealing system is designed to prevent atmospheric air leakage into the turbine casings and main condenser, and steam leakage out of the casings of the turbine generator.

10.4.3.2 System Description

The turbine gland sealing system controls the steam pressure to the turbine glands in order to maintain adequate seating under all conditions of turbine operation. The system consists of individually controlled diaphragm-operated valves, relief valves, and a gland steam condenser.

Gland steam is supplied from the Main Steam System. At high plant loads, the spillage from the high pressure turbine element glands provides more steam than the low pressure turbine element glands require. The excess steam is relieved to the turbine condenser through a pressure-regulating valve. The leak-off steam and air mixture then flows to the gland steam condenser which is maintained at a pressure slightly below atmospheric so as to prevent escape of steam from the ends of glands. The gland steam condenser returns seal leakage to the main condenser as condensate.

Each of the low pressure turbine glands has a gland steam supply regulator. Both high pressure turbine glands are supplied from one regulator. A spillover valve in the high pressure turbine gland seal provides pressure regulation for the dumping of excess turbine gland leakage to the main condenser.

Exhauster vacuum on the low pressure side of the seals can be maintained with either blower in operation.

10.4.3.3 System Evaluation

The design of the diaphragm-operated valves is such that failure of any valve will not endanger the turbine. The valves controlling the supply of steam to the gland seals fail (on loss of instrument air) in an open position thus allowing uninterrupted steam sealing. The valve controlling the return flow from the gland seals fails closed thereby maintaining required steam sealing pressure. Thus, steam sealing is maintained in the event of a diaphragm-operated valve failure.

Noncondensable gases from the gland steam condenser may be monitored for radioactivity at the same discharage point as the main condenser evacuation system, these gases are routed up the plant stack.

10.4.3.4 Tests and Inspections

Operation of two full capacity gland steam condenser vent blowers is alternated periodically. The system, is tested in accordance with written procedures during the initial testing and operation program, and is readily available for inservice inspection. The system is normally in use when the plant is operating and thus special tests are not required to insure operability.

10.4.3.5 Instrumentation Applications

Pressure indicators for the gland steam condenser and the main steam supply are provided locally and in the control room in order to monitor system performance. Radiation detectors are provided on the noncondensable gas exhaust header as discussed in Subsection 10.4.2.5.

10.4.4 STEAM DUMP AND BYPASS SYSTEM

The steam dump and bypass system which is a subsystem of Distributed Control System (DCS) has no safety design bases and is classified as nonseismic. Refer to Figures 10.1-1 through 10.1-3 and also to the design data in Table 10.3-1. The Steam Dump and Bypass System is designed to accomplish the following functions:

a. Accommodate load rejections meeting the original design basis of 45 percent of the full load main steam flow and mitigate challenges to pressurizer and steam generator safety valves.

b. Maintain the Reactor Coolant System at hot zero power conditions.

c. Provide a control element assembly automatic withdrawal prohibit signal subsequent to a demanded steam bypass system operation.

d. Provide a means for manual control of the RCS temperature during heatup or cooldown.

e. Provide a condenser interlock which will block steam bypass flow when unit condenser pressure exceeds a preset limit.

10.4.4.1 System Description

The Steam Dump and Bypass System which is a subsystem of the DCS consists of the Steam Dump and Bypass Control System, the steam dump and bypass valves, and associated piping and instrumentation. The Steam Dump and Bypass Control System is described in Subsection 7.7.1.1.5. Four steam dump valves and one turbine bypass valve located downstream of the main steam isolation valves, connect the main steam header outside containment directly to the main condenser.

The bypass and steam dump valves are air operated globe valves. The original system design flow capacity of 45% was restored as part of the Extended Power Uprate. The system is designed to mitigate challenges to the pressurizer and steam generator safety valves during large load rejections. The valves are normally controlled by the Steam Dump and Bypass Control System via the M/A station or flat panel displays on RTGB-202 but are capable of remote or local manual operation. The system is capable of controlling at flows as low as 28,000 lb/hr in order to permit operation at hot standby.

The steam dump and bypass system is designed to remove excess heat from the Nuclear Steam Supply System (NSSS) during load reductions, after unit trips and anytime conditions exist which may result in high secondary system pressure. If the turbine cannot accept all the steam being produced in the steam generators (for example in the event of a turbine trip or partial loss of electrical load on the generator), an alternate heat removal path is provided to cool down the reactor coolant and to remove the reactor decay heat to limit the pressure rise in the steam generators. Steam dump and bypass valves, located downstream of the main steam isolation valves, connect the main steam header outside containment directly to the main condenser and are programmed to bypass steam directly to the condenser when such a high pressure condition occurs. The system is designed to enable the plant to accept a loss of electrical load on the generator of the original design basis of 45 percent of full power while mitigating challenges to the pressurizer and steam generator safety valves.

On a load rejection the steam dump and bypass valves are modulated in sequence to control main steam pressure to a fixed setpoint. A quick opening signal is generated as a function of the magnitude and rate of change of the load rejection determined by monitoring both the steam flow and the turbine load. The duration of the quick opening signal is proportional to the flow magnitude and rate of change. Once the signal is removed the valves revert back to the modulation control. The quick opening signal on a reactor trip is generated when both the measured reactor coolant average temperature and the main steam pressure exceed their preset threshold values.

During plant shutdown with off site power available, the required number of valves may be remote manually positioned to remove reactor decay heat, pump heat and Reactor Coolant system sensible heat to reduce the reactor coolant temperature at the design cooldown rate until shutdown cooling is initiated. For plant shutdown without offsite power, the atmospheric dump valves located upstream of the main steam isolation valves may be used for removal of reactor decay heat and cooldown by venting steam from the steam generators directly to atmosphere.

10.4.4.2 System Evaluation

The steam dump and bypass valves are designed to fail closed to prevent uncontrolled flow of steam from the steam generator. Should the bypass valves fail to open on command, the atmospheric dump valves provide a means for a controlled cooldown of the Reactor Coolant System. The main steam safety valves provide main steam line overpressure protection. Because the ASME Code Main steam safety valves provide the ultimate overpressure protection for the steam generators, the Steam Dump and Bypass system has no safety function and therefore is not designed to the requirements applicable to protection systems.

The steam dump and bypass valves discharge to the main condenser and do not affect essential safety systems. Should the condenser not be available as a heat sink, an interlock prevents opening, or if open, closes the steam dump and bypass valves. The main steam isolation signal protects the Reactor Coolant System from overcooling if the steam dump and bypass flow becomes higher than design.

There are four steam dump lines and one turbine bypass line which bypasses steam to the condenser in the event of a turbine trip. All these lines are routed below the turbine deck. It is highly improbable that a break in any of these lines will damage the overspeed protection devices most of which are located above the turbine deck. The only portion of the overspeed protection system that is likely to be affected by a break in the turbine bypass line will be the electrohydraulic fluid lines routed below the turbine deck. A drop of hydraulic pressure in the electrohydraulic system due to a pipe break or any other reason will result in a turbine trip and the closure of the turbine stop and control valves, thus precluding the chances of a turbine overspeed. Turbine overspeed protection system is discussed in Subsection 10.2.2.2.

Failure of the Steam Dump and Bypass Control System has no detrimental effects on the Reactor Coolant System. Operation of this system has no adverse effects on the environment since steam is bypassed to the condenser, the heat sink in use during normal operation.

10.4.4.3 Inspection and Testing Requirements

Before the Steam Dump and Bypass System is placed in service, system valves are tested to assure operability and are periodically verified. The steam dump and bypass valves are capable

of being tested while the main turbine is in operation. System piping and valves are accessible for in-service inspection.

10.4.4.4 Instrumentation Requirements

The instrumentation and control are discussed in Subsection 7.7.1.1.5.

10.4.5 CIRCULATING WATER SYSTEM

The Circulating Water System is a nonsafety, nonseismic system. The Circulating Water System is shown schematically on Figure 9.2-1. The general plan and profile of the system is shown on Figures 10.4-1 through 10.4-4.

10.4.5.1 Design Bases

The Circulating Water System is designed to provide a heat sink for the main condenser under normal operating and shutdown conditions. The system serves as the primary source of water for the ultimate heat sink.

10.4.5.2 System Description

The St. Lucie Unit 2 Circulating Water System consists of four circulating water pumps, four debris filters, the condenser intake, four continuous on-line condenser tube cleaning systems, the condenser discharge, a headwall and an ocean discharge line. The discharge canal from the seal well to the headwall is shared with St. Lucie Unit 1. The Intake Cooling Water System is described in Subsection 9.2.1. The intake and discharge canals and the plant cooling water requirements are discussed further in subsections 2.4.8, 2.4.9 and 2.4.11.

The suction bells for the circulating water pumps are at elevation - 16.0 feet thereby providing suction submergence for the required pump NPSH (6 feet). The circulating water pumps discharge into four buried pipes to the condenser. The water leaving the condenser flows from the condenser discharge water boxes through concrete tunnels and pipes to the seal well. From the seal well, the discharged condenser cooling water travels about 2000 feet in the shared canal to a discharge headwall structure, located on the west side of the sand dune. From the discharge canal headwall, the cooling water is carried through the ocean discharge pipe to multiport diffusers.

10.4.5.3 System Evaluation

The four circulating water pumps are each sized to provide 25 percent of the cooling water flow for the condenser. The pumps are sized for the maximum condenser heat load and provide sufficient head to overcome system frictional losses.

The Circulating Water System may be used for a normal plant shutdown. Water to the steam generators is supplied from the Auxiliary or Main Feedwater System. Steam then flows through the Turbine Bypass System and discharges into the main condenser. During this mode of operation the Turbine Bypass System has the capability of passing greater than 45 percent of the full power main steam flow into the main condenser (see Subsection 10.4.4).

Any transient or reduction of the circulating water flow results in partial loss of condenser vacuum. The main condenser was originally designed to be normally operational at a condenser

vacuum of 3.58 inches Hg absolute. Should the condenser vacuum reach the low vacuum setpoint, the turbine protection system automatically trips the turbine. The turbine protection system and setpoints are discussed in Section 10.2.

The Circulating Water System piping is located entirely underground in the yard except at the main condenser. The main condenser is located in the lowest elevation of the Turbine Building. There is no safety-related equipment housed in the Turbine Building, and, thus, a failure in the circulating water piping to the main condenser will not result in potential malfunction of any safety-related components.

The Turbine Building is a totally open structure which houses the secondary side components. Any leakage in the Main Steam, Feedwater or Circulating Water Systems would be directed to either the building floor drains or the site storm drainage system. Any leakage local to the condenser will be directed to the condenser sump. Since there is no safety related equipment in this area, an essential leak detection system is not provided for this area. Appendix 3.6F describes the piping failure analysis considered.

10.4.5.4 Environmental Control

Chlorine in the form of sodium hypochlorite is used to control biological fouling in the Circulating Water System by use of a hypochlorite system serving both St. Lucie Units 1 and 2. No other chemicals will be added to the circulating water flow.

The hypochlorite solution is mixed with the water coming into the intake structure in order to control biofouling. The solution in the Circulating and Intake Cooling Water Systems is added in regulated quantities so that the residual chlorine at the terminus of the discharge canal will not exceed the limits as defined in applicable plant permits. As the hypochlorite solution is mixed with the water coming into the intake structure in regulated quantities, adverse corrosive effects are not expected.

A continuous on-line condenser tube cleaning system (CTCS) that employs sponge balls to scrub the condenser tubes on the circulating water side is also used to control biological fouling. The Florida Department of Environmental Protection identified to FPL concerns regarding CTCS sponge ball loss and the potential for consumption by sea turtles. In the several responses to the State, FPL was able to demonstrate that the combination of system design features and Good Management Practices will minimize sponge ball loss to the Atlantic Ocean.

10.4.5.5 Testing and Inspection

Shop hydrostatic tests on the pump casings are made at a minimum of 150 percent of the maximum operating pressure.

Prior to installation in the system, each component is inspected and cleaned.

Preoperational testing consists of calibrating the instruments, testing the automatic controls for actuation at the proper setpoints, and checking the operability and limits of alarm functions. Automatic actuation of system components is tested periodically to confirm operability. The Circulating Water System is in service during normal plant operation. System performance is monitored and data taken periodically to confirm heat transfer characteristics. (Note: For economic considerations, a routine heat rate assessment is performed. This assessment provides an overall indication of thermal efficiency and monitors system performance).

10.4.5.6 Instrumentation Application

The Circulating Water System is continuously monitored by measuring the condenser inlet and outlet temperature. Grab samples are used to monitor residual chlorine content.

10.4.6 CONDENSATE CLEANUP SYSTEM

Feedwater recirculation filtration, chemical addition and steam generator blowdown are used to maintain the secondary water chemistry. The Condensate Polisher Filter Demineralizer System (CPFD) is available for condensate cleanup on either Unit 1 or Unit 2. Two 24 inch headers (influent and effluent lines) connect the CPFD with the existing condensate piping system. Condensate is normally diverted to the CPFD system prior to and during plant start-up. It also may be used during normal plant operation.

The interconnecting piping is provided with double isolation valves on both the inlet and outlet of the CPFD with interlocks which insure that the CPFD is not connected simultaneously to both units. A bypass around the CPFD is provided with full flow capability and a bypass flow control valve. The bypass valve is controlled manually and also opens automatically to maintain normal condensate flow in case of CPFD trouble.

10.4.7 CONDENSATE, FEEDWATER AND HEATER DRAIN SYSTEM

The Condensate, Feedwater and Heater Drain System, shown on Figures 10.1-2a, 2b and 10.1-3a, 3b, draws water from the condenser hotwells and feedwater heaters and pumps it to the steam generators feed nozzles. Design data for the condensate pumps, heater drain pumps, feedwater pumps and feedwater heater are given in Table 10.4-1.

The feedwater parameters for 100 percent load, and extended power uprate (EPU) are presented on Table 10.3-7.

The Heater Drain Pumps 2A & 2B and Feedwater Pumps 2A and 2B are tripped upon SIAS.

The evaluation of the extended power operation on the condensate, feedwater, and heater drain systems demonstrated that modifications on the condensate pumps, feedwater pumps, heater drain pumps, feedwater flow control valve, feedwater heaters 5A and 5B, and various heater drain system valves were required to operate the plant at the extended power level (3034 MWt).

10.4.7.1 Design Basis

The only part of the Condensate, Feedwater, and Heater Drain Systems that is safety related is the portion of the main feedwater system from and including the feedwater isolation valves located outside the containment to the steam generator feed nozzles, and is designed to Quality Group B and seismic Category I requirements. The Condensate and Feedwater System from the condenser hotwell up to these feedwater isolation valves, located outside containment, is designated non-nuclear safety and is classified as non-seismic.

The safety related portions of the Feedwater Systems have the following design bases:

a. Provide feedwater to the steam generators during normal, shutdown and transient operations.

b. Provide automatic containment isolation in the event of a loss of coolant accident.

c. Withstand pipe rupture effects as discussed in Section 3.6.

d. Withstand the adverse environmental effects of tornadoes, hurricanes and flooding as discussed in Sections 3.3 and 3.11.

e. Be protected against externally generated missiles as discussed in Section 3.5.

f. Design to preclude hydraulic instabilities, (e.g. water hammer).

g. Trip the Heater Drain Pumps 2A & 2B and Feedwater Pumps 2A and 2B upon SIAS via SR ESFAS relays as shown in Table 7.3.-2.

10.4.7.2 System Description

The feedwater cycle is a closed regenerative system with deaeration accomplished in the main condenser. Condensate from the hotwell is pumped by two of the three condensate pumps through the steam jet air ejector inter- and after- condensers, the gland steam condenser, three stages of low pressure heaters, the low pressure drain coolers, and through the fourth stage low pressure heaters, (two parallel heater strings) to the suction of two feedwater pumps operating in parallel. The feedwater is then pumped through two parallel strings of the fifth stage high pressure feedwater heaters to the steam generators.

The condensate and feedwater system supplies full load feedwater flow plus steam generator blowdown flow and cycle losses at the expected steam generator pressures during normal plant operations (refer to Figure 10.2-1). In addition, the system provides the required flow to the steam generators during transient plant load changes, turbine and reactor trip. During these transient conditions the turbine bypass system is utilized when condenser backpressure is available, or the atmosphere dump valves are used should condenser vacuum reach its trip setpoint (refer to Subsection 10.4.4).

Each condensate pump is protected from overheading during startup and reduced load operation by a minimum recirculation flow control valve which discharges directly to the main condenser. In addition to these individual pump recirculations, minimum condensate system flow is maintained during low power levels by recirculating condensate from downstream of the gland steam condenser to the main condenser. Each feedwater pump is protected from overheating during startup and reduced load operation by a minimum recirculation flow control valve which discharges to the main condenser.

The feedwater heaters are of the U-tube type and are arranged in two parallel strings. Each string carries approximately half of the feedwater flow and consists of four low pressure heaters and one high pressure heater. The two lowest pressure heaters are mounted in the neck of the main condenser and are arranged in parallel strings. Bypasses and crossties between the split strings are provided for flexibility of operation.

Surveillance on the quality of the secondary water, in the form of regular sampling of the feedwater supply and the steam generator blowdown, is provided (refer to Subsection 10.3.5.2 and 9.3.2.2).

Startup cleaning, and deaeration to exclude oxygen and noncondensable gases in the condensate and feedwater system is provided. A feedwater recirculation line is provided upstream of the feedwater control valve, which includes a feedwater recirculation filter, two safety and relief valves, flow restriction orifices and necessary connections to the condenser.

Each feedwater line is provided with a check valve located inside containment to preclude backflow from the steam generators. Details of containment isolation provisions are contained in Tables 6.2-52 and 53.

The design of the main feedwater line penetration assemblies is discussed in Subsection 3.8.2.

10.4.7.3 Evaluation

The Condensate and Feedwater Systems are capable of reduced load operation with one condensate pump, both heater drain pumps, one steam generator feedwater pump, or one heater string, out of service.

A loss of normal feedwater flow results in a reduced capability for steam generator heat removal. In the event of such an occurrence, the Auxiliary Feedwater System ensures a sufficient supply of cooling water to the steam generators (refer to Subsection 10.4.9).

In case of malfunction of heater shells, the isolation valves for the malfunctioning feedwater heater(s) are manually closed, thus permitting flow to be bypassed around the out-of-service feedwater heater(s).

Each feedwater line is provided with two redundant main feedwater isolation valves which are designed to Quality Group B, seismic Category I requirements. These isolation valves are provided with electro hydraulic operators that enable both fast valve closure (4.2 seconds) during the accident mode. All four main feedwater isolation valves close automatically upon receipt of a MSIS signal from either channel SA or channel SB. In addition, an AFAS signal will also close the main feedwater isolation valves associated with the steam generator(s) which is(are) receiving auxiliary feedwater. Refer to Section 7.3. The AFAS signal may be manually overriden by the control room operator and the valves re-opened. Since the valve was designed and tested to close in a maximum of four seconds, the feedwater isolation response time has been revised for stretch power from 5.35 seconds to 5.15 seconds, assuming an instrumentation delay time of 1.15 seconds.

The increased feedwater flow rate due to EPU (see Table 10.3-7) is still within the design capabilities of the valve and therefore, the MFIVs are acceptable for EPU operation without any design change.

In the event of primary-to-secondary system leakage due to a steam generator tube leak, it is possible for the condensate and feedwater system to become radioactively contaminated. A full discussion of the radiological aspects of primary-to-secondary leakage is included in Chapters 11 and 12.

The steam generator feedwater spargers are designed to prevent draining during a steam generator low-level transient. The steam generator design is described in Section 5.4. The design provisions for the prevention of feedwater instability (i.e., water hammer) are discussed in Subsection 10.4.9.3. Transients involving loss of heat removal by the secondary system are described in Section 15.2.

10.4.7.4 Tests and Inspections

The steam generator feedwater pumps, heater drain pumps and the condensate pumps are tested at the manufacturer's shops to demonstrate successful operation and performance of the equipment.

Preoperational testing is performed to verify the design adequacies of the steam generator sparger rings and J-tubes, piping layout and operation of pumps and valves. Preoperational and functional testing is outlined in Chapter 14.

ASME Code Section III feedwater piping is furnished with removable insulation to allow in-service inspection of welds. The in-service inspection program is a part of the Technical Specification.

10.4.7.5 Instrumentation Applications

The water level in each of the steam generators is obtained by the measurement of the downcomer water level for the Distributed Control System (DCS). The steam generator steam flow signal and feedwater flow signal are compared with this level signal in a three-element control in DCS. The DCS output of the three-element control actuates the 100 percent capacity main feedwater regulating valves to effect the desired feedwater flow to each steam generator. In addition to the feedwater regulating valves, there is a remote manually operated 15 percent capacity bypass valve and a 100 percent capacity motor operated bypass valve for backup in case of outage of the regulating unit. The 15 percent low flow bypass valve is used during startup and shutdown operations. A Low Power Feedwater Control System (LPFCS) which is an extension of the Feedwater Regulating System will maintain steam generator level at setpoint value during unit start-up in the range of approximately 2 to 15% load. Refer to Section 7.7 for a complete description of feedwater flow control system.

In addition to the existing venturi method of measuring feedwater flow, the Leading Edge Flow Meter (LEFM) System is installed as part of a Measurement Uncertainty Recapture (MUR) effort for the Extended Power Uprate. The LEFM is a highly sophisticated feedwater mass flow rate measurement system. It employs the ultrasonic transit time method to determine path sound velocity and axial fluid velocity. It also contains an automatic self-checking system to continuously verify if it is performing properly and to initiate alarms at the Control Room when unsatisfactory conditions are detected. The LEFM system will support determination of secondary calorimetric thermal power with an accuracy of approximately ± 0.3% of Rated Thermal Power (RTP) when PSL Unit 2 is operating between 95% RTP and 100% RPT.

10.4.8 STEAM GENERATOR BLOWDOWN SYSTEM (SGBS)

The Steam Generator Blowdown System (SGBS) is utilized in conjunction with the Chemical Feed and Secondary Sampling Systems (Subsection 10.3.5 and 9.3.2, respectively) to control the chemistry of the steam generator secondary side water.

The SGBS flow diagrams are shown on Figures 9.5-6, 10.4-5, and 10.4-6. The design data are given in Table 10.4-1.

10.4.8.1 Design Basis

The safety related portion of the SGBS, from the steam generator blowdown nozzle up to the outermost containment isolation valve, is designed to Quality Group B and seismic Category I requirements. The remainder of the system is designated non nuclear safety and non seismic. The non-safety related portion of the SGBS, from the outermost containment isolation valve to the check valve (V23107 and V23132) is designed to Quality Group D and Seismic Category I requirements.

The SGBS is designed to fulfill the following requirements:

a. To control steam generator secondary side water chemistry as discussed in Subsection 10.3.5.

b. Monitor secondary side radioactivity for any primary to secondary leakage.

c. Reduce the steam generator blowdown contaminants to an acceptable level prior to discharge to the environment.

d. Provide a continuous blowdown rate of 0.2 percent of the total original main steam flow during normal operating conditions.

e. Permit a maximum blowdown rate of 1.0 percent of the total original main steam flow during periods of abnormal condenser inleakage.

f. Provide blowdown system containment isolation capability.

g. Protected against the dynamic effects of pipe rupture as outlined in Section 3.6.

h. Protected against externally generated missiles as discussed in Section 3.5.

10.4.8.2 System Description

The Steam Generator Blowdown System (SGBS) consists of a closed blowdown cooling loop and an open blowdown cooling subsystem. The thermal energy from the blowdown stream is transmitted to the closed loop via the closed blowdown heat exchangers. The closed loop acts as a barrier between the process stream and the environment. The heat is transported from the closed loop to the Intake Cooling Water System via the open blowdown heat exchangers. The Intake Cooling Water System dissipates this thermal energy into the discharge canal.

Each steam generator has two blowdown lines that merge and discharge to the SGBS. During normal plant operation, the SGBS is capable of processing a total flow from both steam generators of 18,900 lbs/hr. Should condenser inleakage occur, the SGBS is designed to process a total flow of 94,500 lbs/hr in order to maintain the feedwater chemistry limits specified in Subsection 10.3.5.

Steam generator blowdown is extracted from each steam generator at full load temperature and pressure. The blowdown is initially subcooled by the piping configurations and is further subcooled in the closed blowdown heat exchangers to 120 F, which is compatible with the ion exchanger process. The blowdown cooling loop is shown in Figure 10.4-12. The blowdown is then passed through a pressure-reducing valve and flow control station and then is discharged to the Steam Generator Blowdown Treatment Facility.

The Steam Generator Blowdown Treatment Faculty (SGBTF), which was licensed on the St Lucie Unit 1 docket (Docket No. 50-335) and is shown on Figures 9.5-6, 10.4-5, and 10.4-6, is a common facility shared between St Lucie Units 1 and 2. The SGBTF has been analyzed for the seismic forces as outlined in Subsection 3.7-2.

There are three process streams in the SGBTF, each consisting of its own process filter demineralizer, monitor storage tank and pump. Each process stream has the capability of handling the maximum blowdown rate from one unit (two steam generators) with one process stream acting as a spare. The system was originally designed for automatic monitoring of the process effluent for radioactivity within the SGBTF. Indication of radioactivity from the SGBTF monitors would have initiated automatic closure of the isolation valves discharging to the canal when the radioactivity was above a preset limit. This design feature is no longer utilized. Additionally, effluent from the monitor storage tanks is no longer pumped to the discharge canal. Automatic isolation function to the SGBTF is currently performed by RM-26-5 & RM-26-6. Plant controls and procedures govern processing of effluent prior to return to the condenser. During normal plant operation, blowdown entering the SGBTF is monitored for radioactivity by RM-26-5 & RM-26-6, and is either recycled or released to the discharge canal. For recycling, the blowdown is passed through a blowdown filter to remove suspended solids, through the demineralizer train to the monitor storage tank. Any ionic impurities are then removed by ion exchange in a cation demineralizer and a mixed-bed demineralizer connected in series. The cation resin used in the cation and mixed-bed demineralizer is a high capacity, strong acid exchange resin in the H^+ form. The anion resin used in the mixed-bed demineralizer is a high capacity strong-base exchange resin in the OH^- form. A temperature control valve (TCV-23-8) is provided as a protection for the demineralizer resins. If the temperature of the blowdown exceeds a specified limit, the valve will close and a high temperature alarm will annunciate in the control room to initiate operator action.

The effluent from the ion exchanges is collected in any one of three monitor storage tanks where it is recirculated, sampled and analyzed for radioactivity and conductivity. In the event that the radioactivity discharge limits cannot he met, the blowdown is either reprocessed or held up. Any one of the three storage tanks can be recirculated for reprocessing by any one of the three discharge pumps. Furthermore, the system was originally designed such that one tank can be recirculated, one tank discharged to the canal, and one tank discharged for reprocessing by their respective discharge pumps at the same time. Current plant procedures prevent effluent discharge from the monitor storage tanks to the discharge canal.

10.4.8.3 System Evaluation

The Steam Generator Blowdown System has no safety related function, with the exception of the containment isolation. The valves and piping which constitute the containment boundary are discussed in Subsection 6.2.4. The isolation valves outside containment close automatically upon receipt of a CIAS or a Steam Generator Blowdown System high radiation Signal. The CIAS or High Radiation signals may be remote manually overridden and the valves re-opened by the Control Room operator. These isolation valves, as well as the isolation valves inside containment, are closed within 7 seconds of a steam generator blowdown pipe rupture. This maintains a mild environment in the RAB penetration area as evaluated in Section 3.1.3.3 of the Environmental Qualification Report and Guidebook (2998-A-451-1000).

The steam generator blowdown is continuously monitored for radioactivity. Radiation monitors are provided on each steam generator blowdown line (RM-26-5 & RM-26-6). In the event that the fluid being processed in the system is radioactive, additional processing of the effluent will

be performed to reduce the activity to acceptable levels prior to return to the condenser. This has the effect of concentrating the activity in the blowdown filters and the demineralizer resins which is then discharged to the Solid Waste Management System described in Section 11.4.

The Steam Generator Blowdown Monitor Storage Tanks have a vent that exhausts directly to the atmosphere. The operation of these tanks will be within the guidelines of 10 CFR 50, Appendix I (Offsite Dose Calculation Manual – ODCM), regarding the release from the vent. The radioactivity of the water entering the tanks will be monitored per the ODCM. In addition, upon high radiation in the blowdown line, the tanks can be isolated to prevent contamination from accumulating.

In the event of contamination of the liquid inventory in the Monitor Storage Tanks (MST), all tanks are provided with local level indication and high level alarm to prevent spillage. In addition, the MST overflow and drains are routed to the Equipment Drain Tank in the Liquid Waste Management System.

Failure of any component in the Steam Generator Blowdown System does not affect safe shutdown of the plant.

10.4.8.4 Testing and Inspection

Those portions of the SGBS performing containment isolation are tested under conditions of normal operation in accordance with the procedure outlined in Chapter 14 to ensure that all valves close properly and that the design leakage requirements are met. The remaining portions of the SGBS is also functionally tested during normal operation to ensure satisfactory performance.

Periodic sampling is required as a performance check on some of the process equipment and to alert the operator to any abnormal condition that may be developing.

10.4.8.5 Instrumentation and Controls

Instrumentation and controls ensure operation within design parameters and monitor effluent conductivity, radioactivity, blowdown flow rate, and monitor tank low water level. Procedures and Controls allow recycling and allow flow to be discharged or used as makeup water.

10.4.9 AUXILIARY FEEDWATER SYSTEM

The function of the Auxiliary Feedwater System (AFWS) is to ensure a sufficient supply of cooling water to the steam generators when main feedwater is not available. The Auxiliary Feedwater System P&ID is provided in Figures 10.1-1a and 10.1-2b. The system component design data is provided in Table 10.4-1.

The original system sizing calculations of the Auxiliary Feedwater System (CST and ADVs included) have conservatively assumed 2754 MWt power level, (as discussed in Table 10.4.9A-1). The extended power uprate analyses were performed for a core power level of 3020 MWt. The system is capable of operating safely at extended power.

10.4.9.1 Design Bases

The design bases of the Auxiliary Feedwater System are as follows:

a. AFWS supplies sufficient cooling water to either one or both steam generators to ensure the following:

   1. provide sufficient capability for the removal of decay heat from the reactor core,

   2. reduce the Reactor Coolant System temperature to entry temperature for actuating the Shutdown Cooling System (SDCS),

   3. prevent lifting of the pressurizer safety valves when considered in conjunction of the PORV.

b. The AFWS delivers feedwater against the maximum steam generator pressure.

c. The Auxiliary Feedwater System is designated Quality Group C except as follows:

   The Auxiliary Feedwater supply from the outermost containment isolation valves to the steam generators is designated Quality Group B.

   The steam supply for the auxiliary feedwater pump turbine, from the main steam line upstream of the main steam isolation valve to the outermost containment isolation valves, is designated Quality Group B.

d. The seismic Category I condensate storage tank stores sufficient demineralized water for the AFWS to hold the reactor at a hot standby condition for at least two hours followed by an orderly cooldown until the SDCS is actuated. Refer to Subsection 9.2.6.

e. The AFWS is designed to operate with loss of offsite and onsite ac power.

f. Two full capacity ac powered motor driven pumps and one greater than full capacity steam turbine driven pump ensure system performance with redundant and diverse power sources.

g. The AFWS is designed to preclude hydraulic instabilities.

h. The AFWS is able to perform its design functions following design basis phenomena (see Sections 2.4, 3.3, 3.4, 3.5, 3.6, 3.7 and 3.8).

i. The AFWS is designed to withstand pipe rupture effects (see section 3.6).

10.4.9.2 System Description

During normal operation, feedwater is supplied to the steam generators by the Feedwater System. The Auxiliary Feedwater System (AFWS) may be utilized during normal plant startup, hot standby, and cooldown. During plant startup and hot standby, the system can provide a source of water inventory for the steam generators. During cooldown, the AFWS can provide a means of heat removal to bring the Reactor Coolant System to the shutdown cooling system

activation temperature. With offsite power and the main condenser available, the condenser may be used as a heat sink.

The major active components of the system consist of one steam driven pump with greater than full flow capacity and two full flow capacity motor driven auxiliary feedwater pumps. Both electrical and steam driven AFWS pumps are centrifugal units with horizontal split casings and are designed in accordance with ASME Code, Section III and Quality Group C requirements. The larger pump is driven by a noncondensing steam turbine. The turbine receives steam from upstream of the main steam isolation valves, and exhausts to the atmosphere. The pumps take suction from the condensate storage tank and discharge to the steam generators. The turbine-driven pump is capable of supplying auxiliary feedwater flow to the steam generators for the total expected range of steam generator pressure by means of a turbine driver controlled by a variable speed mechanical governor.

Each motor-driven pump supplies feedwater to one steam generator. A cross connection is provided to enable the routing of the flow of the two motordriven pumps to one steam generator. The turbine-driven pump supplies feedwater to both steam generators by means of two separate lines each with its own control valve and each sized to pass the full flow. AFW valves needed for system operation under design bases events have control switches in the control room and locally as well. Each of the motor driven auxiliary feedwater pumps utilize a Class 1E ac power supply (4.16 kV safety related bus). The turbine driven pump train relies strictly on a dc power supply.

10.4.9.3 Safety Evaluation

The AFWS can remove sensible and decay heat from the Reactor Coolant System during hot standby and cooldown for initiation of shutdown cooling. For events in which main feedwater flow is unavailable, (e.g., loss of main feedwater pump, loss of offsite power, and main steam line break), the AFWS is automatically initiated to provide hot standby and/or cooldown heat removal, following a specified time delay period (see Section 10.4.9.5).

The condensate storage tank (CST) discussed in Subsection 9.2.6, provides the water supply for the Auxiliary Feedwater System. The CST is sized to provide 150,000 gallons of demineralized water for St. Lucie Unit 2 for hot standby and cooldown operations; an additional 130,500 gallons is reserved in the St. Lucie Unit 2 CST only in the event that a vertical tornado missile somehow ruptures the St. Lucie Unit 1 CST and the water contained therein (130,500 gallons per St. Lucie Unit 1 Technical Specifications) is unavailable to St Lucie Unit 1. A cross-tie is provided between Units for this unlikely event. As a result, the cross-tie is designed and installed as Quality Group D, non-seismic (Ref. PSL-ENG-SEMS-97-064). The minimum stored volume in the CST is 307,000 gallons, which is below the lowest non-seismically qualified nozzle. This accounts for the following volumes.

<u>Unusable Volume</u>

All water stored below a line 8 inches above the suction point is considered unusable. This quantity of 9,200 gallons is considered in the determination of the minimum required stored volume. No credit is taken for the height of water in the tank in the evaluation of the Net Positive Suction Head available to the Auxiliary Feedwater Pumps.

Unit 1 Shutdown Volume

A volume of 130,500 gallons is maintained for use by Unit 1 in the event the St. Lucie Unit 1 CST is ruptured by a tornado missile. This amount is more than sufficient for shutdown purposes. Unit 1 Technical Specification level is 153,400 gallons.

Unit 2 Shutdown Volume

A volume of 150,000 gallons is maintained to shutdown Unit 2 as outlined below.

Instrument Error

The instrumentation error of 4,230 gallons is based on a CST level loop uncertainty of 0.9 percent of the instrumentation span. This uncertainty has been added to the total of the above volumes.

Working Volume

The total of the above volumes, including allowance for instrumentation error, amounts to 294,000 gallons. The maximum working (available) volume is equal to the minimum stored volume (307,000 gallons) minus the 9,200 gallons of unusable volume. Therefore, the St. Lucie Unit 2 CST capacity of 297,800 gallons is available when no tornado warnings are in effect.

Should a vertical tornado missile disable the Unit 1 Condensate Storage Tank (CST), Unit 1 operators will be alerted to the loss of auxiliary feedwater by the redundant safety grade low-level alarm and level indicators (LIS-12-11, 12) located in the Unit 1 Control Room. Once alerted, Unit 1 operators initiate procedures to obtain auxiliary feedwater water supply via the CST cross-tie between Units. These procedures require Unit 1 operators to alert Unit 2 to the need to intertie the CSTs. The Unit 1 operators open (as necessary) the intertie isolation valves (E&F on Figure 10.4-8a). Unit 2 operators open isolation valves (A&D) or (B or C, and D). If Unit 1 requires auxiliary feedwater before or concurrently with Unit 2, procedures require the opening of valves A and D. If Unit 2 has previously consumed the feedwater required for shutdown, valves (B or C and D) would be opened. A misalignment of valves causing a loss of suction to the Auxiliary Feedwater Pumps would be evidenced by the safety grade flow indicators located in the control room.

The quantity of water required for St. Lucie Unit 2 cooldown has been determined assuming a worst case condition wherein the unit is brought to hot standby conditions and held there for approximately two hours then cooled down at the maximum rate until the shutdown cooling window is reached. Under this scenario, each Auxiliary Feedwater Pump has the capability of achieving an orderly shutdown consisting of two hours of hot standby followed by a regulated cooldown to the shutdown cooling entry point within the next five hours. The quantity of condensate required for this scenario is approximately 139,000 gallons as shown on Table 10.4-2 (Case 2) and Figure 10.4-10.

The condensate storage requirements for the Auxiliary Feedwater System were compared with the requirements of Regulatory Guide 1.139, "Guidance for Residual Heat Removal." Under this scenario, the unit is brought to hot standby conditions and held there for four hours then cooled down at the analyzed cooldown rate of 75°F/hour until the shutdown cooling window of 350°F is reached. The condensate storage requirement for this scenario is 150,000 gallons as shown on Table 10.4-2 (Case 1) and Figure 10.4-10. EC290592

During station blackout conditions (except the hypothetical tornado missile which drains the St. Lucie Unit 1 CST) there is sufficient water in the CST to allow hot standby operation for 23 hours and a subsequent cooldown to 294°F over 3.5 hours (see Table 10.4-2 and Figure 10.4-10). The condensate requirements and the auxiliary feedwater flow rate, based on the limiting accident condition, are discussed in Appendix 10.4.9A.

The steam generated during decay heat removal and cooldown after a loss of offsite power is discharged through the atmospheric dump valves, except for the steam used by the turbine driven auxiliary feed pump. There are two ac/dc motor operated atmospheric dump valves (ADVs) located on each main steam line. The ADVs are capable of automatic modulating service using ac power and are capable of open/close service from the control room using dc power only. Each ADV is sized to pass 50 percent of the flow required to bring the Reactor Coolant System to the shutdown cooling system entry temperature, assuming that only 125,000 gallons of condensate is available from the condensate storage tank.

The auxiliary feedwater pumps are located underneath the steam trestle. The AFWS is designed to withstand natural phenomena as described in Sections 3.3 and 3.5. The condensate storage tank is a seismic Category I structure. It is surrounded by a structural barrier which provides missile and tornado protection for the tank. Components in the AFWS are protected from flooding as components are located above the probable maximum flood level (refer to Section 3.4). The design provisions utilized to protect the AFWS against the dynamic effects of pipe rupture and jet impingement effects are provided in Section 3.6. The Auxiliary Feedwater System piping layout and the steam trestle configuration is provided on Figures 10.4-14, 10.4-15, 10.4-16, 3.8-61, and 3.8-62. The suction lines for the Auxiliary Feedwater Pumps are protected over their entire length from the Condensate Storage Tank (CST) to the trestle. From the CST to the turbine building and from the turbine building to the trestle the lines are totally enclosed in a pipe trench. The pipe trench is designed to withstand the effects of seismic events and tornados. Within the turbine building the suction lines are buried in concrete.

The basemat and steel superstructure of the turbine building has been designed to withstand the effects of a Safe Shutdown Earthquake (SSE). This insures the safety of all essential components in the vicinity of the turbine building by eliminating the possibility of catastrophic failure. The local failure of non-seismic components located in the turbine building cannot adversely affect plant safety since no essential equipment is located there.

The potential for hydraulic instability is also considered in the design of the Feedwater System and Auxiliary Feedwater System Piping. Routing of the feedwater piping is such that draining of the feedwater line is minimized. The 32 feet drop in the feedwater piping immediately outside the feedwater nozzle and the existence of two check valves between the steam generator and the feed pumps provides adequate assurance that the piping will not drain. Design provisions are incorporated into the feedwater sparger to minimize the rate of draining and are discussed in Section 5.4. Refer to Figure 10.4-13 for a main feedwater piping isometric from the steam generators to the restraint of the upstream side of the feedwater isolation valves.

The St. Lucie Unit 1 and 2 motor operated valves reviewed for IE Bulletin 85-03 are slow acting valves (see Table 10.4-1a and FPL letter L-88-19). The valve closure times and piping lengths were surveyed to determine the most limiting system configuration and valve operating characteristics with respect to water hammer. An evaluation was performed to verify that the worst case system configuration and valve operating characteristics would not cause significant water hammer loading due to valve closure.

The following AFW MOVs are subject to the requirements of NRC Generic Letter (GL) 89-10: MV-09-9, MV-09-10, MV-09-11, and MV-09-12. The requirements of GL 89-10 supersede those of IE Bulletin 85-03.

Diverse power sources are utilized to ensure that the Auxiliary Feedwater System is capable of performing its intended safety function. The design features incorporated into the Auxiliary Feedwater System to assure diversity in power sources are: a) each motor driven auxiliary feedwater pump is aligned to a separate diesel generator with its associated motor-operated isolation valves being fed from the same diesel as the pump, and b) the turbine driven pump and its associated suction and discharge isolation valves are fed from a dc power supply. This arrangement ensures sufficient supply due to total loss of both offsite and onsite ac power supply. The diversity in power supply is shown schematically on Figure 10.4-8.

The Auxiliary Feedwater System is designed such that no single active failure coupled with loss of offsite power prevents plant cooldown.

A failure mode and effects analysis of the Auxiliary Feedwater System, assuming a main steam or feedwater line break accident and loss of offsite power, is presented in Table 10.4-3. The failure mode and effects analysis of the AFWS assuming an auxiliary feedwater line break coincident with loss of offsite power is presented on Table 10.4-4. Figure 10.4-8 provides the auxiliary feedwater flow schematic for the single failure analysis.

Gas Accumulation and Air Intrusion

Similar to the issues discussed in NRC Generic Letter 2008-01 and SER 2-05, the presence of unanticipated gas voids within the AFW System can challenge the ability of the system to perform its design functions due to issues such as gas binding, water hammer, injection delay times, etc. The AFW system has little opportunity for gas to enter the pump suction piping, but it may be possible for system leaks to result in voiding in the discharge piping or the Unit 1 and Unit 2 CST crosstie.

10.4.9.4 Testing and Inspection

Auxiliary feedwater pumps are functionally tested at the manufacturer's shop to demonstrate successful operation and performance of the equipment. The operability assurance program is described in Subsection 3.9.3. Motor operated valves previously identified will be tested (as required) using differential (d/p) stroke testing or other available and approved techniques to address NRC Generic Letter 89-10 requirements.

Monitoring of fluid conditions within the AFW system is performed on a regular basis to preclude a steam binding condition. Should such a condition exist, additional procedures are provided to restore the AFW system to operable status. These inspections and procedures are provided in accordance with the IE Bulletin 85-01, "Steam Binding of Aux Feedwater Pumps".

Preoperational functional testing was performed and the system is tested periodically as described in the Technical Specifications.

10.4.9.5 Instrumentation Application

Display information related to the Auxiliary Feedwater System is discussed in Section 7.5. Status of active components during system operation is displayed for the operator in the control room and locally. See Table 10.4-5 for a list of instrumentation and controls provided.

During startup, hot standby and cooldown the AFWS is controlled manually by the operator from the control room. Means are provided to throttle the control valve from the main control room in each AFWS train to permit the operator to adjust the auxiliary feedwater flow rates into the steam generators. Steam generator pressure and water level indication is provided to inform the operator when the AFWS can be shutdown. Means are provided to start/stop each pump or to open/close the AFWS isolation and turbine steam stop valves from the control room.

The Auxiliary Feedwater System is provided with complete sensor and control instrumentation to enable the system to automatically respond to a loss of steam generator inventory. Upon low steam generator level, an Auxiliary Feedwater Actuation Signal (AFAS) time delay is actuated. Actuation of the AFAS is delayed for a preselected period of time. If steam generator water level increases to reset the low level actuation bistable before the AFAS time delay expires, the time delay resets and the AFWS is not actuated. If the AFAS time delay expires while steam generator level is below the AFAS low level actuation bistable (first) reset, then the AFWS receives an AFAS. This signal starts the auxiliary feedwater pumps and fully opens the redundant isolation valves automatically providing a minimum feedwater flow of 357 gpm to a steam generator pressure of 900 psi. The AFWS supplies water to the steam generator until the steam generator level increases to the second AFAS reset setpoint, where the AFWS pump discharge valve automatically closes thereby diverting flow from the Steam Generators to the condensate storage tank. The MOVs have Limitorque SMB operators designed for severe duty while the solenoid valves utilize the Target Rock operators that have been designed for an extended life cycle. All valve operators are qualified to IEEE-323-74, 344-75 and 382-72.

To reach high-level from the normal level it takes approximately another three minutes with all valves fully open. To be on the conservative side these numbers were computed without assuming steaming through the Safety Relief Valves, and assuming all three pumps were running and both Steam Generators were available after initiating the AFWS on low-level.

The AFAS logic employs four channels of initiating signals to provide a two out of three actuation sequence of system components. A separate AFAS is generated for each steam generator, AFAS 1 for generator 2A and AFAS 2 for generator 2B. An AFAS 1 will indicate that SG 2A requires feedwater and thus, will start auxiliary feedwater pumps 2A and 2C and will open isolation valves MV-09-9 & 11 and SE-09-2 & 4, steam inlet valves MV-08-12 and MV-08-13 and close MFIV HCV-09-1A, 1B. Similarly, an AFAS 2 will indicate that SG 2B requires feedwater and thus will start pumps 2B and 2C and will open isolation valves MV-09-10 & 12 and SE-09-3 & 5, steam inlet valves MV-08-12 and MV-08-13 and close MFIV HCV-09-2A, 2B.

Both "latched" and "unlatched" signals are generated by an AFAS. The pumps, whose operation is initiated and never interrupted, receive latched signals. The feedwater isolation valves, which open on low steam generator level and close on high level, receive unlatched signals. Additionally, using four channel pressure instrumentation on the main steam and feedwater lines, the system has the ability to identify and isolate a faulted steam generator or ruptured feedwater line. Should a differential pressure of approximately 275 psid between the steam generators or 150 psid between the AFW supply headers be detected, auxiliary feedwater flow

to the loop with the lower pressure is isolated. This is done by closing the applicable auxiliary feedwater isolation valves. Redundant isolation valves are provided to assure that feedwater does not enter a faulted loop even after a single active failure. A complete description of the AFAS logic circuitry is provided in Subsection 7.3.1.1.8. This complies with SRP 10.4.9 (Rev 1) and BTP ASB 10-1 (Rev 1) as identified in Subsection 10.4.9A.

Verification of system operation is provided in the control room by a redundant safety related flow indication and recording for each Auxiliary Feedwater pump. For Pump A, the indicator is powered from safety bus SA and the recording is powered from safety bus SB. For Pump B, the indicator is powered from safety bus SB and the recording is powered from safety bus SA. For Pump C, the indicator is powered from bus SAB and recorder is powered from safety bus SA.

In addition, redundant feedwater header pressure indicators are provided in the control room for each steam generator. These pressure indicators in conjuntion with the steam generator level and auxiliary feedwater pump discharge flow indicators, provide the operator with a reliable means to determine system operation status.

TABLE 10.4-1

COMPONENT DESIGN PARAMETERS

1. Main Condenser

Type	Two shell, single pass with divided water boxes, surface condenser
Design duty, BTU/hr	5.850×10^9
Maximum duty, BTU/hr	6.10×10^9
Heat transfer area, ft^2	546,000
Design pressure:	
Shell, psig/in. Hg	15 psig/30 in. Hg vacuum
Water Box, psig	25
Total flow to condenser, max. guaranteed, lb/hr	7,812,473
Total flow to condenser, max. expected, lb/hr	8,195,683
Material	
Shell	ASTM A-285, GR C
Tubes	ASTM B-338-73 Titanium
Tube Sheets	Aluminum bronze with pressurized integral grooves
Codes	Heat Exchanger Institute Standards for Steam Surface Condensers, NNS

2. Steam Jet Air Ejector

a. Inter-Condenser

Type	Single pass
Heat Transfer Area, ft^2	415
Design Pressure:	
Tube side, psig	750
Shell side, psig	25 and full vacuum

TABLE 10.4-1 (Cont'd)

2. Steam Jet Air-Ejector (Cont'd)

Material:	
Shell	ASTM-A285, GR C
Tubes	316 S.S. ASTM A249
Tube Sheets	316 S.S. ASTM A240
Codes	Heat Exchange Institute Steam Jet Ejector Standard, NNS

b. After-Condenser:

Type	Single pass
Heat Transfer Area, ft^2	160
Design Pressure:	
Tube side, psig	750
Shell side, psig	25 and full vacuum
Material:	
Shell	ASTM-A285, GR C
Tube	316 S.S. ASTM A249
Tube Sheets	316 S.S. ASTM A240
Codes	Heat Exchange Institute Steam Jet Ejector Standard.

3. Circulating Water System

a. Circulating Water Pumps

Type	Single stage, vertical removable element, mixed flow
Quantity	4
Capacity, each, gpm	122,650
Head, feet	40

TABLE 10.4-1 (Cont'd)

3. Circulating Water System (Cont'd)

Material:	
Case	2 percent Ni-Cast Iron, ASTM-A-48 Cl-30
Impeller	ASTM A-296 CF3M
Shaft	ASTM A-276 Type 316 SS
Motor	Constant speed, 1500 hp, 4000v, 60 hz, 3 phase, 360 rpm (nominal), with 1.15 Service Factor
Enclosure	WP II
Codes	NEMA, Standards of the Hydraulic Institute, ASME Section VIII, NNS

b. Traveling Water Screens

Type	Vertical, through-flow
Quantity	4
Screen velocity, ft/min	10 & 20
Material:	
Screen	Stainless Steel
Frame	Stainless Steel & Fiberglass

c. Screen Wash Pumps

Type	Five stage, vertical, turbine wet pit
Quantity	2
Capacity, each, gpm	1060
Head, feet	250
Material:	
Case	2 percent NI cast iron
Impeller	Type 316 SS, ASTM-A 296
Shaft	Type 316 SS, ASTM-A 276

TABLE 10.4-1 (Cont'd)

3. Circulating Water System (Cont'd)

Motor	100 hp, 460 V, 3 phase, 60 hz, 1800 rpm (nominal)
Enclosure	TEFC
Codes	NEMA, Standards of the Hydraulic Institute, ASME Section VIII, NNS

d. Debris Filters

Type	Automatic (Self Cleaning)
Quantity	4
Pressure, psig	50
Temperature, F	125
Design Diff. Press., psid	45
Shell Material	ASTM-A-240, Type 316
Perforation Size, mm	5
Code	ASTM-F1199

e. Ball Strainers (Condenser Tube Cleaning System)

Type	Inverted "V"
Quantity	4
Pressure, psig	50
Temperature, F	125
Design Diff. Press., psid	20
Shell Material	ASTM-A-240, Type 316
Strainer Grill Spacing, mm	ASTM-F1199
Code	5

TABLE 10.4-1 (Cont'd)

3. Circulating Water System (Cont'd)

f.	Ball Recirculation Pumps	(Condenser Tube Cleaning System)
	Type	Single Stage, non-clogging Centrifugal
	Quantity	4
	Capacity, each, gpm	270
	Head, feet	56
	Case/Impeller Material	AL6XN
	Motor	7.5 hp, 460 v, 3 phase, 60 hz, 1750 rpm
	Enclosure	TEFC (Submersible)
	Codes	NEMA, Standards of the Hydraulic Institute
g.	Ball Collector (Condenser Tube Cleaning System)	
	Type	Manual
	Quantity	4
	Pressure, psig	50
	Temperature, °F	125
	Shell Material	ASTM-A-285, Grade C (Rubberlined)
	Code	AD-Merkblatter Series B (German)
h.	Piping, Fittings and Valves	
	Pressure, psig	50
	Temperature, °F	135 (max.)
	Pipe material*	
	Below ground	Concrete
	Above ground	Cast iron, cement lined, ASTM B675 (UNS #08367), Reinforced Thermosetting Resin (RTR) Fiberglass, PVC, CPVC and Monel
	Valves	
	3 inches and above	Cast iron, flanged, rubber lined, steel, flanged, rubber lined or wafer, PVC/CPVC
	2-1/2 inches and under	Bronze, screwed or flanged, PVC/CPVC

* Note: All pipes 3 inches and above.

TABLE 10.4-1 (Cont'd)

4. Main Feedwater Pumps

Type	Two-stage centrifugal, horizontally split case, single suction, double volute
Quantity	2
Capacity each, gpm	15,500
Head, feet	1,750
Fluid temperature, F	385
Material:	
Case	ASTM A487, Gr. CA6NM
Impeller	ASTM A487, Gr. CA6NM

TABLE 10.4-1 (Cont'd)

4.	Main Feedwater Pumps (Cont'd)	
	Shaft	ASTM A-276, Type 410 HT
	Driver	Constant Speed, 3-ph, 60 cycle Electric Motor, 7000 hp, 3575 rpm, 6600 V, 1.15 Service Factor (S.F.)
	Codes	ASME Section VIII, NNS
5.	Condensate Pumps	
	Type	Vertical centrifugal, 5-stage, can type
	Quantity	3
	Capacity, each gpm	9,400
	Head, feet	1,370
	Fluid Temperature, F	117.3
	Material:	
	Case	A216 Gr. WCB
	Impeller	A487/A743 Gr. CA6NM
	Shaft	410 SS
	Driver	Constant speed, 3-ph, 60 cycle, electric motor, 4000 hp, 1180 rpm, 4000 V, 1.15 S.F.
	Codes	ASME Section VIII, NNS
6.	Heater Drain Pumps	
	Type	Vertical centrifugal 7-stage, can type
	Quantity	2
	Capacity each, gpm	4750 (required minimum flow of 1500 gpm)
	Head, feet	850
	Fluid temperature, F	450

TABLE 10.4-1 (Cont'd)

6. Heater Drain Pumps (Cont'd)

Material:

Case	ASTM A 296 CA 6 NM
Impeller	ASTM A-487 Gr. CA6NM
Shaft	ASTM A276 TY 410 SS
Driver	Constant speed, 3-ph, 60 cycle, electric motor,1250 hp, 1780 rpm or 1500 hp, 1785 rpm, 4000 V, 1.15 S.F
Codes	ASME Section VIII, NNS API STD 682 ANSI Sections B16.5, B31.1

7. Feedwater Heaters

Heaters Numbers	2-1A&1B 2-2A&2B 2-3A&3B	2-4A&4B	2-5A&5B
Type	Closed, U-tube	Closed, U-tube	Closed, U-tube
Material:			
Shell	ASME SA-515-70	ASME SA-387-11-2	ASME SA-387-11-2
Tubes	ASTM-SA-688, TP304	ASTM-SA-688, TP-316L	ASTM-SA-688, TP316L
Tube sheets	ASME-SA-516-70	ASME-SA-336-F11-3	ASME-SA-350-LF2
Feedwater flow lb/hr (total for both heaters)	7,812,473	13,443,564	13,306,000

Codes	ASME Section VIII, NNS 2-4A/B: 2010 Edition, No Addenda 2-5A/B: 2007 Edition, No Addenda Heat Exchange Institute Standards for Closed Feedwater Heaters

TABLE 10.4-1 (Cont'd)

8. Drain Coolers

Coolers Numbers	2-A&B
Type	Straight Tube
Material:	
Shell	ASME-SA-516-70
Tubes	ASTM-SA-688, TP304
Tube sheets	ASME-SA-516-70
Feedwater flow (lb/hr)	7,812,473
Codes	ASME Section VIII, NNS
	Heat Exchange Institute Standards for Closed Feedwater Heaters

Heater No.	Design duty each (BTU/hr)	Design press. (psig) Shell	Design press. (psig) Tube	Design temp. (F) Shell	Design temp. (F) Tube	Heat Transfer area each (ft^2)
2-1A,1B	213.3×10^6	50 & Full Vac.	750	300	300	20,484
2-2A,2B	166.2×10^6	50 & Full Vac.	750	300	300	14,839
2-3A,3B	219.7×10^6	75 & Full Vac.	750	320	320	14,452
2-4A,4B	528.0×10^6	300	750	425	450	23,895
2-5A,5B	421.4×10^6	475	2025*	550	500	27,254
	Drain Cooler No.					
2-A,B	130.2×10^6	300	750	422	422	5,058

* HP Heater 2-5A/2-5B tube side is conservatively designed to 2025 psig. The system design pressure is 1875 psig and therefore the tube side relief valves set point is 1875 psig.

TABLE 10.4-1 (Cont'd)

9. Piping and Valves

a. Piping:	Material	Codes
Feedwater*	ASME-SA-106, GR B	ASME Section III, Class 2
Balance of Piping	ASTM-A-155, GR KC-65 ASTM A-106, GR B ASTM-A-312/376 Tp. 316L**	ANSI B31.1
Auxiliary Feed-water Piping		
Suction (above-ground)	ASME-SA-106, Gr B	ASME Section III, Class 3
Suction (under-ground	ASME-SA-358, CL II GR. Tp. 316 SS	ASME Section III, Class 3
Discharge	ASME-SA-106, GR B	ASME Section III, Class 2/Class 3 as applicable

b. Main Feedwater Isolation Valves:

Type	Gate Valve
Quantity	Two per Feedwater Line
Operator	Electro-Hydraulic Actuator
Design Press., psig	1875
Design Temp., F	500°F
Design Flow, lbs/hr	5.9×10^6

10. Steam Generator Blowdown System

a. Filters:

Quantity	3
Code	ASME Section VIII, NNS
Type	Replaceable Cartridge
Material	Stainless Steel
Design Flow, gpm	300

*To Outermost Containment Isolation Valve.
**Only used in pipe whose design temperature is 200°F or less.

TABLE 10-4-1 (Cont'd)

10. Steam Generator Blowdown System (Cont'd)

Particular, Retention, Microns	5
Design Pressure, psig	200
Design Temperature, F	150

b. Demineralizers:

Quantity	6, 2 per Train
Code	ASME Section VIII, NNS
Type	One Cation Bed and One Mixed Bed per Train
Material	Stainless Steel
Resins:	
Cation	Acidic Polystyrene-divinyl benzene (H^+)
Mixed Bed	Basic Quartenary Ammonia Cross Linked, Polystyrene divinyl Type I (OH^-)
Design Pressure, psig	200
Design Flow, gpm	300
Design Temperature, F	150

C. Tanks:

	Monitor-Storage	Spent Resin Storage
Quantity	3	1
Internal Volume, gallons	180,000	9,300
Design Pressure	Atmospheric	Atmospheric
Design Temperature, F	150	50
Materials	Carbon Steel-Epoxy Lined	Stainless Steel
Code	AWWA, b-100, NNS	ASME VIII, Div 1, NNS

TABLE 10.4-1 (Cont'd)

10. Steam Generator Blowdown System (Cont'd)

d. Pumps	Monitor Tank Discharge	Sluice Water	Resin Transfer	Closed Blowdown Cooling
Quantity	3	1	1	2
Type	Centrifugal	Centrifugal	Centrifugal	Centrifugal
Design Pressure, psig	150	150	150	150
Design Temperature, F	150	150	150	150
Capacity, gpm	400	200	100	1400
Design Head, ft	230	195	37	155
Wetted Material	Stainless Steel	Stainless Steel	Stainless Steel	Bronze
Horsepower	50	20	3	100
Code	ASME VIII, Div 1, NNS	ASME VIII, Div 1, NNS	ASME VIII, Div 1, NNS	ASME VIII, Div 1, NNS

e. Heat Exchangers:	Closed Blowdown Cooling	Open Blowdown Cooling
Quantity	3	2
Type	Counter Flow-Single Pass	Counter-Flow-Single Pass
Material: Tubes	ASTM B-163 (Monel)	ASTM B-111,Alloy CDA-687
Shell	ASTM A515 (GR-70)	ASTM A515 GR-70
Duty, Btu/hr	34.6×10^6	69.2×10^6
Flow, tube side (lb/hr)	79,025	2.8×10^6
Flow, shell side (lb/hr)	350,000	700,000
Code	ASME VIII, TEMAC	ASME VIII, TEMA C

f. Tanks	CBCS Surge Tank	CBCS Chemical Feed Pot	Blowdown Drain Collection Tank
Quantity	1	1	1
Volume, Gallons	440	25	480

TABLE 10.4-1 (Cont'd)

f. Tanks (Cont'd)	CBCS Surge Tank	CBCS Chemical Feed Pot	Blowdown Drain Collection Tank
Design Pressure	ATMOS	ATMOS	ATMOS
Design Temp, F	150	150	550
Material	Carbon Steel	316 SS	Carbon Steel
Code	ASME VIII, AWWA, API	ASME VIII AWWA, API	ASME VIII AWWA API

11. Auxiliary Feedwater Pumps	Motor Driven	Steam Turbine Driven
Type	Single suction, horizontally split, horizontal centrifugal	
Stages	10	7
Quantity	2	1
Capacity each, gpm	300*	570**
Head, feet	2660	2660
Fluid temperature, F	120	120
Material:		
Case	ASME SA 487 CA 6 NM	ASME SA 487 CA 6 NM
Impeller	ASTM A-296 CA 6 NM *** (248-302 BHN)	ASTM A 296 CA 6 Nm (248-302 BN)
Shaft	ASTM A-276 Type 410 HT Cond. T	ASTM A-276 Type 410 Cond. T
Driver	Constant speed 3-Phase 60 cycle, electric motor, 350 hp, 3570 rpm, 4000 V, 1.15 S.F.	Single stage, non-condensing steam turbine, 556 hp, 1875 to 3750 rpm with saturated steam from 50 psig to 985 psig respectively.
Seismic	I	I
Safety Class	3	3
Codes	ASME III, 1974 Edition, Winter 1974 Addenda	

Note: *includes minimum recirculation flow of 50 gpm
**includes minimum recirculation flow of 70 gpm
***Alternate material (ASTM A-487 GR CA 6 NM (IR 805)) has been approved for use.

TABLE 10.4-1a

AUXILIARY FEEDWATER SYSTEM MOTOR OPERATED VALVES

(IE BULLETIN 85-03 - HISTORICAL)

TAG NUMBER	VALVE FUNCTION	DESIGN BASIS ΔP OPEN/CLOSE
I-MV-09-9	AFWP 2A Discharge to SG 2A	1375 psi/1375 psi
I-MV-09-10	AFWP 2B Discharge to SG 2B	1375 psi/1375 psi
I-MV-09-11	AFWP 2C Discharge to SG 2A	1332 psi/1332 psi
I-MV-09-12	AFWP 2C Discharge to SG 2B	1332 psi/1332 psi
I-MV-09-13	AFWP 2A Discharge to SG 2B	1385 psi/1385 psi
I-MV-09-14	AFWP 2B Discharge to SG 2A	1385 psi/1385 psi
I-MV-08-12	AFWP 2C Steam Isolation	1085 psi/1085 psi
I-MV-08-13	AFWP 2C Steam Isolation	1085 psi/1085 psi
I-MV-08-3	AFWP 2C Trip & Throttle	1085 psi/1085 psi

TABLE 10.4-2

AUXILIARY FEEDWATER MAKEUP REQUIREMENTS
FOR HOT STANDBY AND HOT SHUTDOWN

Condition	Length of Condition (hours) (*Note 1)	Auxiliary Feedwater Required (gallons) (*Note 1)
Case 1		
Hot Standby	4	60,400
Cooldown (@ 75 F per hour)	4	89,200
Total condensate required to initiate shutdown cooling		149,600
Case 2		
Hot Standby	2	35,800
Cooldown	4.5	93,200
Total condensate required to initiate shutdown cooling	-	129,000
Case 3		
Hot Standby	23	224,500
Cooldown	4	71,000
Total condensate required to initiate shutdown cooling		295,500
Total condensate available (minimum)		297,600

Note 1: This table was determined at pre-EPU conditions. For EPU, Case 1 was reanalyzed, taking 11.4 hours to reach shutdown cooling initiation, requiring a total of 150,000 gallons. For EPU, Case 2 was reanalyzed, taking 7.6 hours to reach shutdown cooling initiation, requiring a total of 132,000 gallons. For EPU, Case 3 was recalculated, taking 26.5 hours to reach shutdown cooling initiation, requiring a total of 293,000 gallons.

TABLE 10.4-3

FAILURE MODES AND EFFECTS ANALYSIS - AUXILIARY FEEDWATER SYSTEM

ASSUMING A FEEDWATER OR MAIN STEAM LINE BREAK IN ST GEN. B AND LOSS OF OFFSITE POWER

Component Identification and Quantity	Failure Mode	Effect on System	Method of Detection	Monitor[2]	Remarks
Offsite Power	Lost	Main Feedwater flow is unavailable	Various loss of power alarms.	CRI	One full capacity motor driven pump powered from the emergency diesel generator sets and one greater than full capacity steam-driven turbine pump are available to supply feedwater to steam generator 2A. Flow control valves SE-09-3, SE-09-5, MV-09-10 and MV-09-12 are closed to isolate auxiliary feedwater flow to steam generator 2B.
Steam turbine driven pump steam inlet valve (MV-08-3)	Fails to close	No effect, Turbine attains full speed. Mechanical overspeed protection still available.	Valve status indication	CRI	Flow control valves SE-09-3, SE-09-5, MV-09-10, and MV-09-12 are closed to isolate auxiliary feedwater flow to steam generator 2B. AFW pumps 2A and 2C available for automatic initiation of feedwater flow to SG-2A.
Steam Supply Valve to Turbine Driven pump (MV-08-13)	Fails to open	No steam supply from steam generator 2A.	Valve status indication and steam supply line pressure indication.	CRI	Flow control valves SE-09-3, SE-09-5, MV-09-10, and MV-09-12 are closed to isolate auxiliary feedwater flow to SG-2B. AFW pump 2A available for automatic initiation of feedwater flow to SG-2A.
Motor Driven Pump 2A	Fails to start	Motor driven pump associated with intact SG is not available.	Motor status lights discharge line flow or pres sure indication.	CRI	Flow control valves SE-09-3, SE-09-5, MV-09-10, and MV-09-12 are closed to isolate feedwater flow to steam generator 2B and full flow established to steam generator 2A via the steam turbine driven pump.
Flow control valve (MV-09-9) or (SE-09-2)	Fails to open	Motor driven auxiliary feedwater pump to steam generator 2A not available.	Valve status indication	CRI	Flow control valves SE-09-3, SE-09-5, MV-09-10, and MV-09-12 are closed to isolate feedwater flow to steam generator 2B and full flow established to steam generator 2A via the steam turbine driven pump.
Flow control valve (MV-09-11) or (SE-09-4)	Valve fails to open	Steam turbine driven pump cannot deliver required flow to steam generator 2A.	Valve status indication	CRI	Flow control valves SE-09-3, SE-09-5, MV-09-10, and MV-09-12 are closed to isolate feedwater flow to steam generator 2B. Full flow established to SG-2A from AFW pump 2A.

TABLE 10.4-3 (Cont'd)

Component Identification and Quantity	Failure Mode	Effect on System	Method of Detection	Monitor[2]	Remarks
Flow control valve (SE-09-3) or (MV-09-10)	One valve fails to close after flow is established	No effect, redundant valve isolates faulted SG-2B.	Valve status indication	CRI	Flow control valves closed to isolate auxiliary feedwater flow to SG-2B. Full flow established to SG-2A from AFW pumps 2A or 2C.
(SE-09-5) or (MV-09-12)	One valve fails to close after flow is established	No effect, redundant valve isolates faulted SG-2B.	Valve status Indication	CRI	Flow control valves closed to isolate auxiliary feedwater flow to SG-2B. Full flow established for SG-2A. AFW pumps 2A or 2C.
Diesel Generator B	Fails to start	Loss of AFW pump 2B. Valves MV-09-10 and SE-09-3 do not operate.	Motor status lights, discharge line flow, or pressure indication.	CRI	Steam turbine driven and 2A motor driven pumps available to supply feed-water to SG-2A. Valves MV-09-12 and SE-09-5 close and SE-09-3 fails closed to isolate feedwater flow to SG-2B.
Diesel Generator A	Fails to start	Loss of AFW pump 2A. Valves MV-09-9 and SE-09-2 do not operate.	Motor status lights, discharge line flow, or pressure indication.	CRI	Steam turbine driven pump available to supply feedwater to SG-2A. Valves SE-09-03, SE-09-5, MV-09-10 and MV-09-12 close to isolate feedwater flow to SG-2B.
Failure of 125V dc B bus	Lost	Motor driven pump B is un-available (due to B diesel failure to start). Valves MV-08-13, MV-09-11, MV-09-10, SE-09-4, and SE-09-3 do not operate	Various loss of power alarms valve controllers.	CRI	2A motor driven pumps available. Valves MV-09-10 and SE-09-3 close and SE-09-5 fails closed to isolate feedwater flow to SG-2B.
Failure of 125V dc A bus	Lost	Motor driven pump A is un-available (due to A diesel failure to start). Valves MV-09-9, SE-09-2, MV-09-12, MV-08-12, and SE-09-5 do not operate.	Various loss of power alarms, valve controllers.	CRI	Steam turbine driven pump available. Valves MV-09-10 and SE-09-2 close and SE-09-5 fails closed to isolate feedwater flow to SG-2B.

1. To facilitate analysis, the feedwater or main steam line break is assumed to occur in the B system. Faulted steam generator is detected by low steam generator water level, low steam generator or feedwater header differential pressure. Validity of analysis is not changed if break is assumed for the A system.

2. CRI - Control Room Indication.

TABLE 10.4-4

FAILURE MODES AND EFFECTS ANALYSIS - AUXILIARY FEEDWATER SYSTEM

ASSUMING AN AUXILIARY FEEDWATER LINE BREAK[1] AND LOSS OF OFF SITE POWER

Component Identification and Quantity	Failure Mode	Effect on System	Method of Detection	Monitor[2]	Remarks
Offsite Power	Lost	Main Feedwater flow is unavailable	Various loss of power alarms	CRI	Two full capacity motor driven pumps powered from the emergency diesel generator sets are available to supply feedwater to either SG. System check valves isolate main feedwater lines from ruptured auxiliary feedwater line
One of two motor driven pumps	Fails to start	One motor driven pump is unavailable	Motor status lights, discharge line flow or pressure indication	CRI	Alternate motor driven pump is available to supply feedwater to associated SG. System check valves isolate main feedwater lines from ruptured auxiliary feedwater line.
Flow control valve (MV-09-9) or (SE-09-2)	Fails to open	Motor driven auxiliary feed-water to steam generator 2A not available	Valve status indication and no motor driven pump 2A discharge flow.	CRI	Motor driven pump 2B is available to supply feedwater to SG-2B. System check valves isolate main feedwater lines from ruptured auxiliary feed-water line.
Flow control valve (MV-09-10) or (SE-09-3)	Fails to open	Motor driven auxiliary feed-water flow to steam generator 2B is not available	Valve status indication and no motor driven pump 2B discharge flow.	CRI	Motor driven pump 2A is available to supply feedwater to SG-2A. System check valves isolate main feedwater lines from ruptured auxiliary feed-water line.
Diesel Generator B	Fails to start	Loss of AFW pump 2B. Valves MV-09-10 and SE-09-3 do not operate.	Motor status lights, discharge line flow, or pressure indication.	CRI	Motor driven pump 2A is available to supply feedwater to SG-2A. System check valves isolate main feedwater lines from ruptured auxiliary feed-water line.
Diesel Generator A	Fails to start	Loss of AFW pump 2A. Valves MV-09-9 and SE-09-2 do not operate.	Motor status lights, discharge line flow or pressure indication.	CRI	Motor driven pump 2B is available to supply feedwater to SG-2B. System check valves isolate main feedwater lines from ruptured auxiliary feed-water line.
Failure of 125V dc B bus	Lost	Motor driven pump B is unavailable (due to B diesel failure to start). Valves MV-09-10, MV-09-11, SE-09-3 and SE-09-4 do not operate.	Various loss of power alarms, valve controllers	CRI	Motor driven pump 2A is available to supply feedwater to SG-2B. System check valves isolate main feedwater lines from ruptured auxiliary feed-water line.

TABLE 10.4-4 (Cont'd)

Component Identification and Quantity	Failure Mode	Effect on System	Method of Detection	Monitor[2]	Remarks
Failure of 125V dc A bus	Lost	Motor driven pump A is unavailable (due to A diesel failure to start). Valves MV-09-12, SE-09-5, MV-09-9, SE-09-2 do water line.	Various loss of power alarms, valves controllers	CRI	Motor driven pump 2B is available to supply feedwater to SG-2B. System check valves isolate main feedwater lines from ruptured auxiliary feedwater line

1. To facilitate analysis the worst case break of an AFW pump 2C discharge line break is assumed. Operator manually stops pump.

2. CRI - Control Room Indication

TABLE 10.4-5
AUXILIARY FEEDWATER SYSTEM INSTRUMENTATION

System Parameter & Location	Tag No.	Indication Local	Indication Control Room	Alarm Control Room	Control Rm Recording	Control Function	Instrument[3] Range	Normal Operating Range	Instrument[3] Accuracy
Condensate Storage Tank									
Level [1]	LC-12-9	*				Regulates flow from demineralized water system to maintain minimum condensate tank level.		33-44 ft	
	LIS-12-10	*							
	LIS-12-11A		*	Low, Low-Low					
	LIS-12-11B		*	Low					
	LS-12-8			Low-Low, Hi, Low					
Auxiliary Feedwater Pumps									
1. Steam pressure at turbine inlet[2]	PI-08-5	*						985-50 psig	
	PS-08-6	*		Low					
2. Pumps suction pressure	PI-12-18A, B, C	*						11.5 psig	
	PS-12-17A, B, C		*	Low					
3. Pump discharge pressure	PI-09-8A, B, C		*					1200 psig	
	PI-09-7A, B, C	*							
4. Pump discharge flow	FI-09-2A		*			Flow is regulated from control rm		320 gpm	
	FI-09-2B		*					320 gpm	
	FI-09-2C		*					500 gpm	
5. Header A Flow	FR-09-2A		*		*			320 gpm	
Header B Flow	FR-09-2B/2C		*		*			320 gpm	
Header C Flow	FR-09-2B/2C		*		*			320 gpm	
Steam Generators									
1. Level	LIC-9013A,B, C,D		*						
	LIC-9023A,B, C,D		*						
	UR-09-2				*				
2. Pressure	PI-8013A,B, C,D		*					985-50 psig	
	PI-8023A,B, C,D		*						
	UR-09-2				*				

TABLE 10.4-5 (Cont'd)

System Parameter & Location	Tag No.	Indication Local	Indication Control Room	Indication Control Room	Alarm Control Rm Recording	Control Function	Instrument[3] Range	Normal Operating Range	Instrument[3] Accuracy
Feedwater Header									
1. Pressure	PT-09-9A, B,C,D PT-09-10A, B,C,D					Isolates ruptured feedwater header via AFAS logic.		1050 psig 1050 psig	

(1) Low-low, high and low level alarms are provided in control room; high and low level alarms provided on water treatment panel.

(2) For turbine driven pump only.

(3) Instrument ranges are selected in accordance with standard engineering practices. Instrument accuracies are selected such that existing instrument loop performance and safety analysis assumptions remain valid. Where applicable, instrument accuracies are also evaluated for their impact on setpoints in accordance with the FPL Setpoint Methodology.

Refer to Drawing
2998-G-663 SH 1

FLORIDA POWER & LIGHT COMPANY
ST. LUCIE PLANT UNIT 2

CIRCULATING WATER SYSTEM
OCEAN INTAKE AND DISCHARGE
SHT. 1
FIGURE 10.4-1

Refer to Drawing
2998-G-663 SH 2

FLORIDA POWER & LIGHT COMPANY
ST. LUCIE PLANT UNIT 2

OCEAN INTAKE
AND DISCHARGE SYS
SH. 2
FIGURE 10.4-2

Refer to Drawing
2998-G-663 SH 3

FLORIDA POWER & LIGHT COMPANY
ST. LUCIE PLANT UNIT 2

OCEAN INTAKE
AND DISCHARGE SYS
SH. 3
FIGURE 10.4-3

Refer to Drawing
2998-G-663 SH 4

FLORIDA POWER & LIGHT COMPANY
ST. LUCIE PLANT UNIT 2

OCEAN INTAKE
AND DISCHARGE SYS
SH. 4
FIGURE 10.4-4

Refer to Dwg.
3509-G-115 SH 1A & 1B

Amendment No. 12, (12/98)

FLORIDA POWER & LIGHT COMPANY
ST. LUCIE PLANT UNIT 2

FLOW DIAGRAM -
STEAM GENERATOR BLOWDOWN
PROCESS SYSTEM
SHEET 1A & 1B
FIGURE 10.4-5

Refer to Dwg.
3509-G-115 SH 2

Amendment No. 12, (12/98)

FLORIDA POWER & LIGHT COMPANY
ST. LUCIE PLANT UNIT 2

FLOW DIAGRAM –
STEAM GENERATOR BLOWDOWN
PROCESS SYSTEM
SHEET 2
FIGURE 10.4-6

DELETED

FLORIDA POWER & LIGHT COMPANY
ST. LUCIE PLANT UNIT 2

FIGURE 10.4-7

Refer to Drawings
2998-G-080 SHs 2A & 2B
and
2998-G-079 SH 1

FLORIDA POWER & LIGHT COMPANY
ST. LUCIE PLANT UNIT 2

FLOW DIAGRAM FEEDWATER &
CONDENSATE SYSTEMS AND
MAIN STEAM SYSTEM
FIGURE 10.4-8

Amendment No. 18 (01/08)

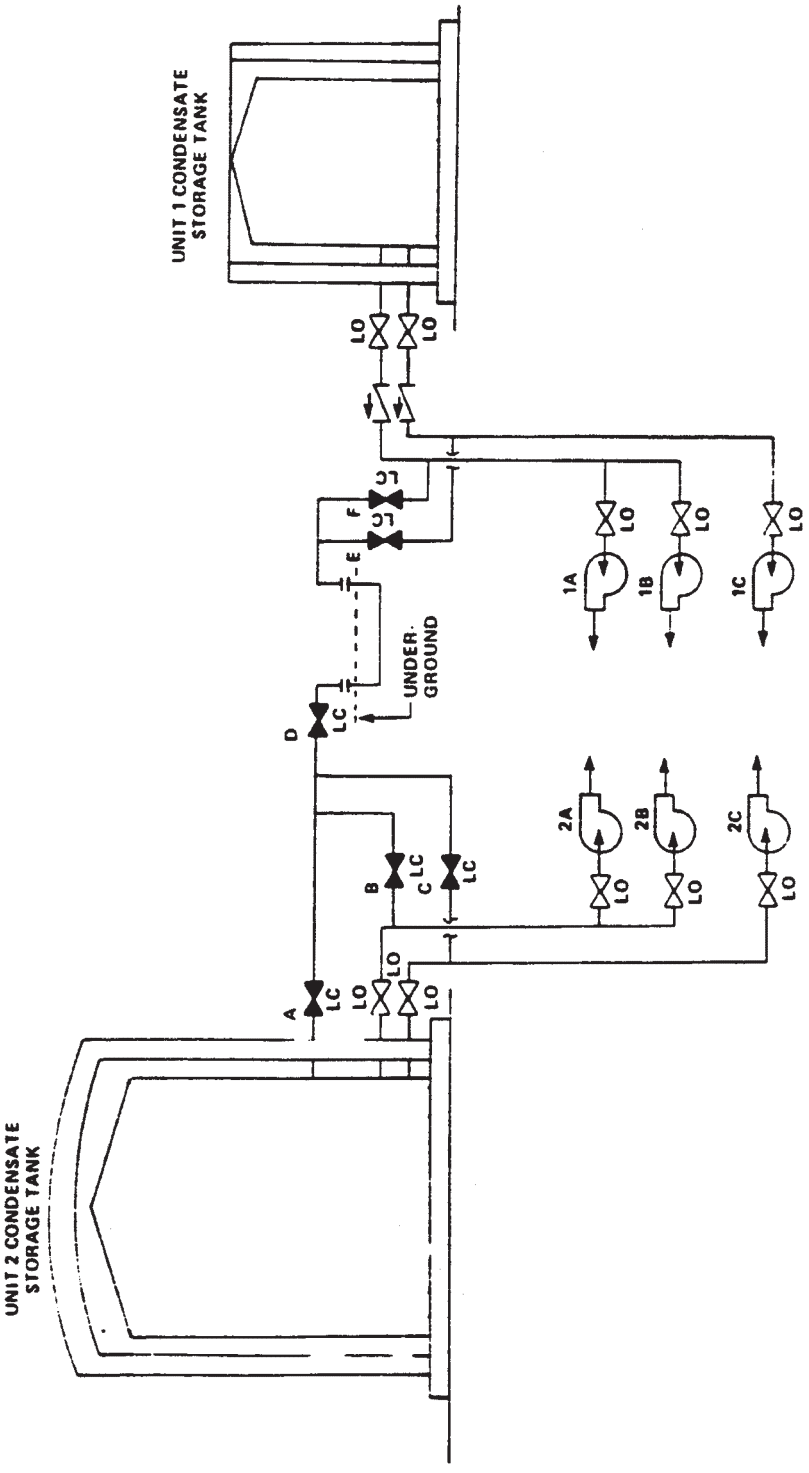

Amendment No. 13 (05/00)

FLORIDA POWER & LIGHT COMPANY
ST. LUCIE PLANT UNIT 2

UNIT 1 - UNIT 2
CONDENSATE STORAGE
TANK INTERTIE

FIGURE 10.4-8a

DELETED

FLORIDA POWER & LIGHT COMPANY
ST. LUCIE PLANT UNIT 2

FIGURE 10.4-9

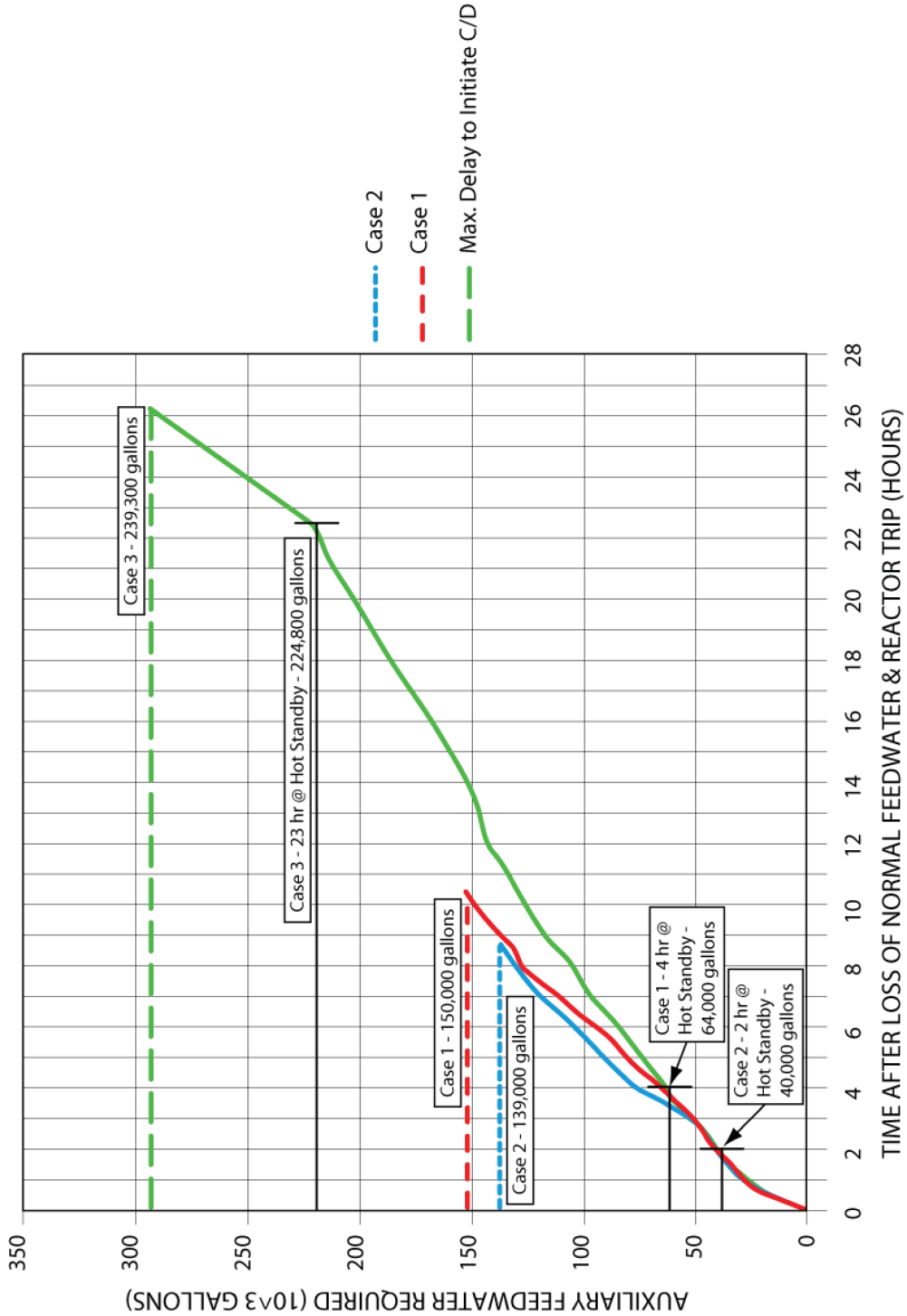

FLORIDA POWER & LIGHT COMPANY
ST. LUCIE PLANT UNIT 2

AUXILIARY FEEDWATER REQUIREMENTS FOR SHUTDOWN

FIGURE 10.4-10

Amendment No. 21 (11/12)

Refer to Drawing
3509-G-116 SH 2

FLORIDA POWER & LIGHT COMPANY
ST. LUCIE PLANT UNIT 2

FLOW DIAGRAM
STEAM GENERATOR BLOWDOWN
COOLING SYSTEM
FIGURE 10.4-12

Amendment No. 18 (01/08)

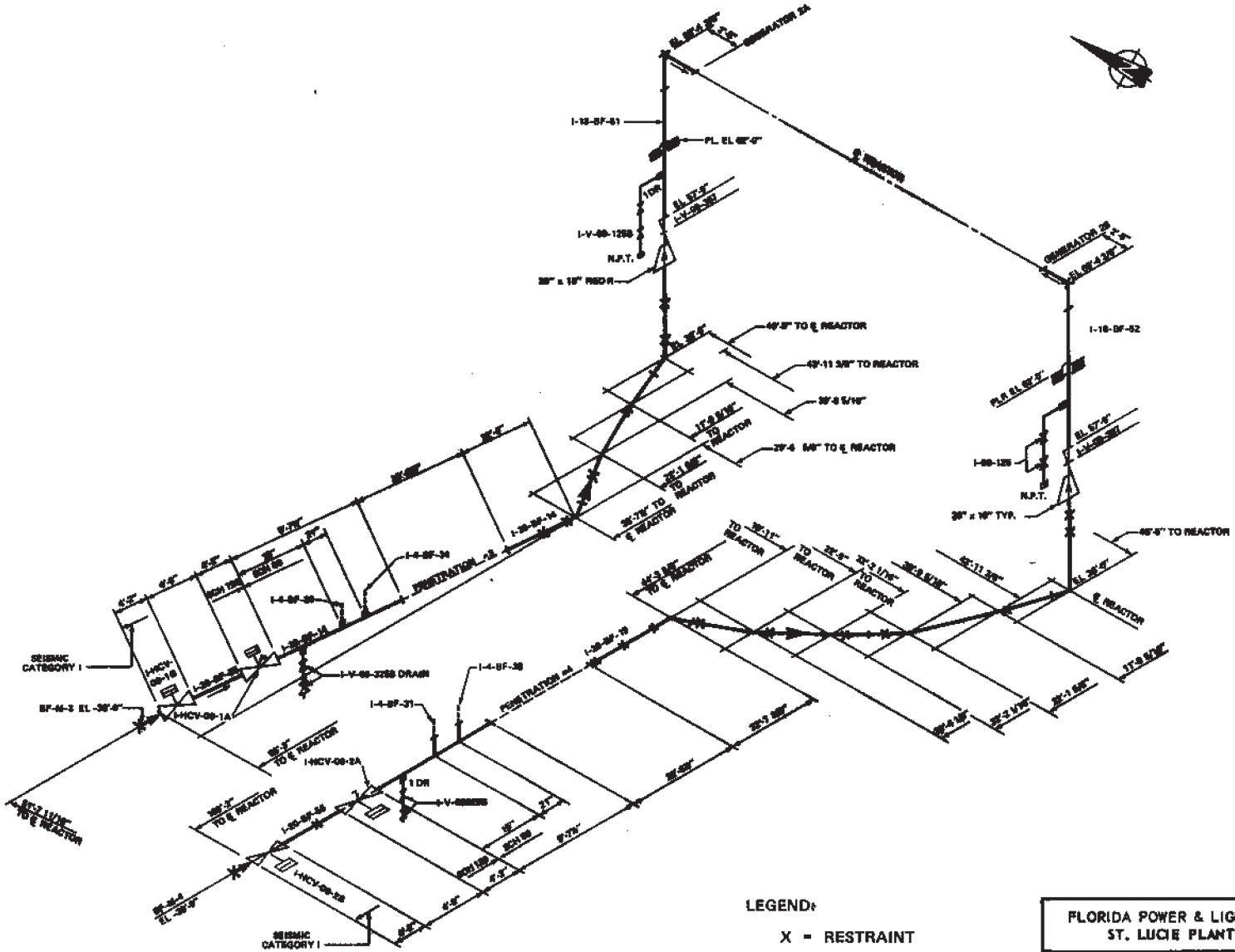

FLORIDA POWER & LIGHT COMPANY
ST. LUCIE PLANT UNIT 2

MAIN FW PIPING ISOMETRIC

FIGURE 10.4-13

Refer to Dwg.
2998-G-838 SH 8

FLORIDA POWER & LIGHT COMPANY
ST. LUCIE PLANT UNIT 2

MAIN STEAM TRESTLE

FIGURE 10.4-14

Amendment No. 10, (7/96)

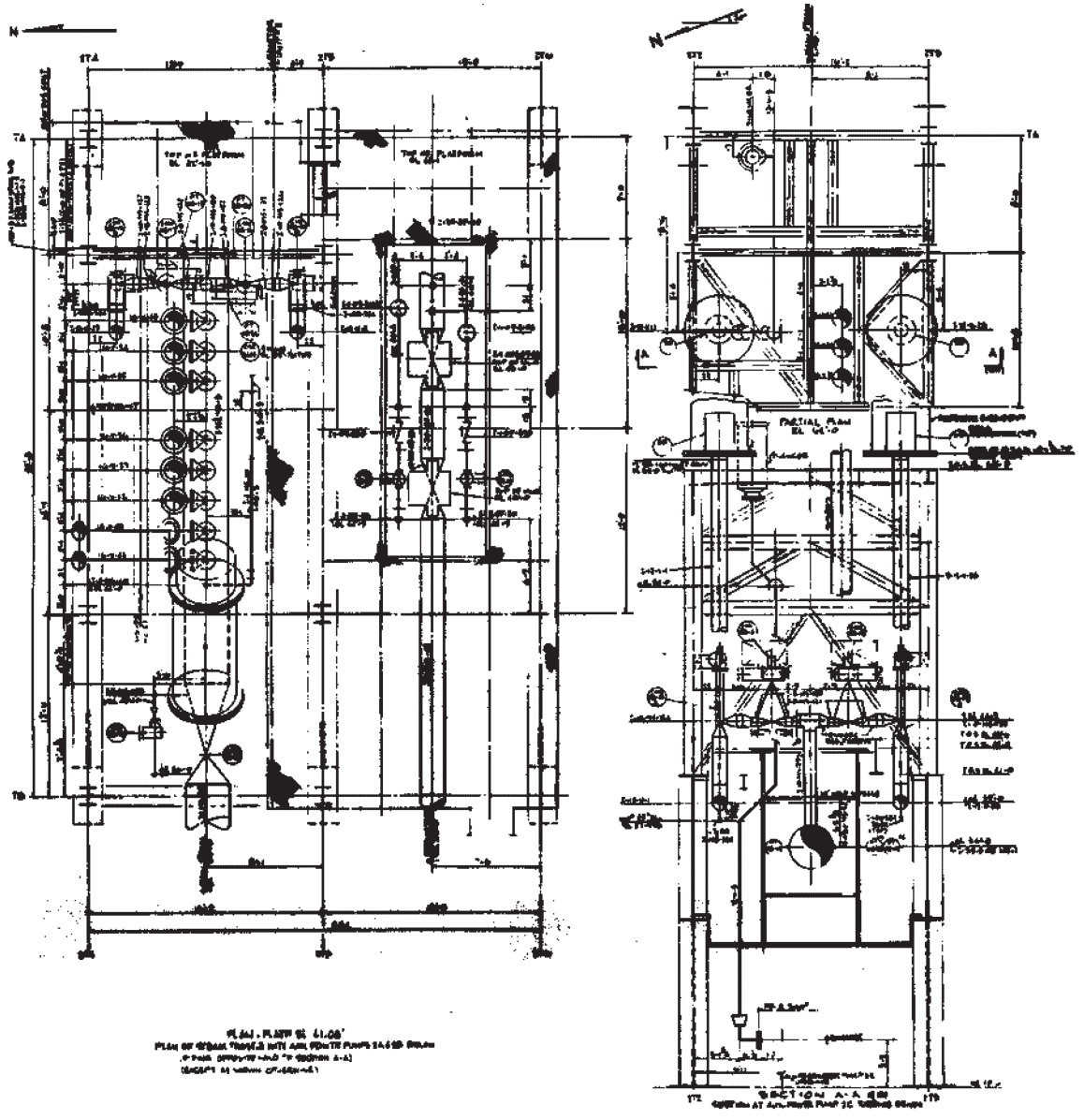

REF DWG: SK-2996-M-656 (REV. 2)

FLORIDA POWER & LIGHT COMPANY
ST. LUCIE PLANT UNIT 2

TRESTLE MISSILE PROTECTION

FIGURE 10.4-15

Refer to Drawing
2998-G-149 SH 2

FLORIDA POWER & LIGHT COMPANY
ST. LUCIE PLANT UNIT 2

MAIN STEAM & FEEDWATER PIPING - SECT & DETAILS
FIGURE 10.4-16

Amendment No. 18 (01/08)

DELETED

FLORIDA POWER & LIGHT COMPANY
ST. LUCIE PLANT UNIT 2

FIGURE 10.4-17

APPENDIX 10.4.9A

AUXILIARY FEEDWATER SYSTEM REQUIREMENTS EVALUATION

10.4.9A AUXILIARY FEEDWATER SYSTEM

An evaluation of the St. Lucie Unit 2 (SL-2) Auxiliary Feedwater System has been finalized and compared with the NRC's requirement basis provided to all operating license applicants (letter from D. F. Ross, NRC, to all pending operating license applicants of NSSS designed by Westinghouse and Combustion Engineering dated March 10, 1980). The technical evaluation is provided in the following sections:

a)	Section 10.4.9A.1	-	Basis for AFS Flow Requirements
b)	Table 10.4.9A-1	-	Comparison of AFS with NRC Flow Requirements
c)	Table 10.4.9A-2	-	SL-2 AFS Comparison with SRP 10.4.9 (Rev 1)
d)	Table 10.4.9A-3	-	SL-2 AFS Comparison with BTP ASP 10-1 (Rev 1)
e)	Table 10.4.9A-4	-	Evaluation of SL-2 AFS vs NRC Short and Long Term Requirements
f)	Appendix 10.4.9B	-	AFS Reliability Report

10.4.9A.1 Basis for Auxiliary Feedwater System Flow Requirements

The design bases for the Auxiliary Feedwater System flow rate is to supply sufficient cooling water to either one or both steam generators to ensure the following:

a. Provide sufficient capability for removal of decay heat from the reactor core

b. Reduce the RCS temperature to entry temperatures for activating the shutdown cooling system

c. Prevent lifting of the pressurizer safety valves when considered in conjunction with the PORVs

10.4.9A.2 System Sizing Criteria

Minimum system flow rate requirements corresponding to the AFWS design functions have been determined based on worst case plant heat loads.

Best estimate transient analyses of the Loss of Main Feedwater (LOMF) and Feedwater Line Break (FLB) events were performed to demonstrate the acceptable performance of the Auxiliary Feedwater (AFW) system. Both events were analyzed to meet the intent of NUREG-0737 and SRP 10.4.9 which require the demonstration of adequate AFW system performance not only for the LOMF event but under any postulated accident scenario. In the case of St. Lucie Unit 2, the FLB is the limiting event in terms of reactor coolant system decay heat removal by the AFW system. By analyzing both events, it demonstrated the acceptability of the AFW system performance and the adequacy of the Reactor Coolant System (RCS) response for the severe low probability transient (FLB) and for the less severe higher probability event (LOMF). Each event was analyzed with and without offsite power available to ensure the limiting conditions were evaluated for both AFW system performance and RCS response.

The results of the analyses demonstrate that the performance of the AFW system at St. Lucie Unit 2 is adequate in maintaining at least one steam generator as a heat sink for the LOMF and FLB transients, both with and without offsite power available. The LOMF event was analyzed assuming a single active failure of the turbine driven AFW pump. The turbine driven pump is the highest capacity pump in the AFW system and the inability to credit this pump results in the

lowest AFW flow rate to the steam generators for the LOMF event. The 2A and 2B motor driven AFW pumps were available to supply condensate storage tank water to the 2A and 2B steam generators, respectively. The analysis concludes the AFW system is capable of maintaining a secondary system heat sink for the LOMF event.

The FLB event was analyzed assuming a single active failure of the turbine driven AFW pump, and a 1.23 ft^2 non-isolable break between the 2A steam generator and the feedwater line check valve. Under this scenario, only the 2B motor driven pump is available to supply water to the 2B steam generator.

The event results in the lowest capacity AFW pump supplying water to the intact steam generator for heat removal. The analysis concludes that one motor driven pump with a capacity of 275 gpm at 1000 psia steam generator pressure is capable of maintaining one steam generator as an adequate heat sink.

The analyses were performed using actual AFW pump head-flow curves and a maximum Auxiliary Feedwater Actuation Signal (AFAS) logic time delay of 330 seconds for LOMF, and LOMFwoP and 420 seconds for FLB with an without LOOP.

The following sections provide the results of the LOMF and FLB analyses:

Loss of Main Feedwater With Offsite Power Available

The sequence of events for this transient is provided in Table 10.4.9A-5. For this event, the AFW system performance is adequate to maintain each steam generator as a heat sink. Following reactor trip on high pressurizer pressure, the Power Operated Relief Valves (PORVs) actuate. The Main Steam Safety Valves (MSSVs) open momentarily to relieve high pressure in the steam generators. Thereafter, the steam bypass control system automatically removes steam and regulates steam generator pressure at 900 psia thereby controlling both secondary and primary system temperatures. The pressurizer level and pressure control systems automatically controlled variations in those parameters. A secondary system heat sink was maintained throughout the transient with a minimum of 14,459 lbm of liquid in each steam generator. The results of the analysis indicate that the AFW system performance was adequate. This event is the limiting case with respect to LOMF events and steam generator liquid inventory. Figure 10.4.9A-1 provides the liquid inventory in the steam generators as a function of time.

Since the maximum pressurizer water volume is less than the total pressurizer volume of 1519 ft^3 and the minimum steam generator water mass is greater than 14,000 lbm for the LOMF event, the analysis examined herein demonstrates that the auxiliary feedwater system is sufficiently sized to remove the decay heat and pump heat of the system.

Loss of Main Feedwater Without Offsite Power Available

The analysis of this event is similar to the case with offsite power available with the following exceptions. Subsequent to the turbine trip, offsite power is unavailable resulting in the tripping of the Reactor Coolant Pumps (RCPS) and the loss of automatic control systems.

Following reactor trip, the ADVs were used to remove steam and control steam generator pressure at approximately 900 psia. Natural circulation was established and a secondary heat sink was maintained with a minimum steam generator liquid inventory of 14,938 lbm in each

steam generator. The liquid inventories are greater than in the previous case due to the natural circulation condition. This condition resulted in reduced secondary inventory vaporization due the decreased primary to secondary heat transfer, due to the increased primary system average temperature, and due to the lack of RCP heat input. Although automatic control systems are unavailable, pressurizer level only rose slightly above its initial value and the Power Operated Relief Valves (PORVS) opened briefly to discharge steam to control pressurizer pressure early into the transient.

The auxiliary feedwater system performance was adequate to remove decay heat and to initiate restoration of steam generator level while the primary system response was well controlled for the natural circulation conditions.

The sequence of events for this transient is provided in Table 10.4.9A-6 and Figures 10.4.9A-2 provides the liquid inventory in the steam generators as a function of time.

Feedwater Line Break With Offsite Power Available

The sequence of events for this transient is provided in Table 10.4.9A-7. The FLB is a severe transient of very low frequency. Although this transient was severe, the AFW system performance was adequate to maintain a secondary system heat sink and the RCS responded in a controlled manner.

At the start of the transient, main feedwater was instantaneously lost. The break was assumed to discharge saturated liquid when the steam generator downcomer level was above the feedline nozzle. As the nozzle uncovers, two phase discharge was assumed with the quality increasing until it becomes saturated steam when the downcomer level falls below the feed nozzle. Eventually, the affected steam generator dries out and only steam from the intact steam generator was discharged. A Main Steam Isolation Signal (MSIS) was generated on low pressure closing the Main Steam Isolation Valves (MSIVs) of both steam generators causing the steam bypass valves to be unavailable. This resulted in the intact steam generator repressurizing to the MSSV setpoint causing the primary system to heatup and repressurize as the affected steam generator dried out. Operator action is assumed at 15 minutes to manually trip the RCPs.

The initial RCS cooldown and the resulting contraction caused the pressurizer level to decrease. The maximum pressurizer water volume calculated (1358 ft^3) is less than the total pressurizer volume of 1519 ft^3. The PSVs do not actuate during the event, therefore, no inventory is released. The combination of the additional heat load (due to the EPU) and the delayed AFW initiation causes an increased pressurizer volume during the long term portion of the event and a lower unfaulted SG inventory. However, AFW is received by the unfaulted generator in enough time such that the inventory is maintained and pressurizer overfill is precluded.

The AFW flow, together with a slow depletion of steam generator liquid inventory, is adequately sized to remove decay heat and to maintain stable primary system conditions. The minimum calculated water mass in the unfaulted generator (16,333 lbm) does not reach a dry-out condition, which ensures that a secondary side heat sink remains available throughout the event. The results of the analysis indicate AFW system performance is sufficient to maintain a secondary system heat sink and that the primary system response is adequate to maintain RCS subcooling. This event is the limiting case with respect to FLB events and steam generator liquid inventory. Figures 10.4.9A-3 through 10.4.9A-6 provide steam generator liquid

inventories, pressurizer level, pressurizer pressure and core exit subcooling margin as a function of time. The sequence of events for this transient is provided in Table 10.4.9A-7.

With the SG blowdown system operating for 30 minutes, the minimum SG inventory will decrease but still maintain margin to SG dryout.

Feedwater Line Break Without Offsite Power Available

This case is similar to the above case except following the turbine trip offsite power is unavailable. The loss of offsite power resulted in the tripping of the RCPs and the unavailability of automatic control systems. Following the trip of the RCPs, natural circulation was established. The lower primary system flow resulted in decreased primary to secondary system heat transfer and higher average RCS temperatures.

As in the previous case, the primary system initially heats up and pressurizes with a resultant increase in pressurizer level. The minimum pressurizer level is slightly higher than the previous case due to the higher RCS temperatures associated with natural circulation. Following the dryout of the affected steam generator (SG 1) and the re-pressurization of the intact steam generator (SG 2), the primary system heats up and pressurizes a second time. Since the pressurizer level and pressure control systems are unavailable, the PORVs cycle to control primary system pressure. The pressurizer level rises to a maximum of about 80% during the primary system heatup and re-pressurization.

A secondary heat sink is maintained throughout the transient with a minimum intact steam generator liquid inventory of 15896 lbm. The results of the analysis indicate that the AFW system performance is adequate to maintain a secondary heat sink and that the primary system response is sufficient to maintain RCS subcooling. Figures 10.4.9A-7 through 10.4.9A-10 provide steam generator liquid inventories, pressurizer level, pressurizer pressure and core exit subcooling margin as a function of time. The sequence of events for this transient is provided in Table 10.4.9A-8.

The nominal initial conditions assumed for the best estimate LOMF and FLB events are provided in Table 10.4.9A-9.

The limiting design basis event has been determined to be 75°F/hr plant analyzed cooldown rate. Under this event, 275 gpm is initially required to be delivered to one steam generator in order to maintain the steam generator inventory. EC290592

TABLE 10.4.9A-1

COMPARISON OF AFS SYSTEMS WITH
NRC SYSTEM FLOW REQUIREMENTS

As a result of recent staff operating plant Auxiliary Feedwater Systems (AFWS), the staff concluded that the design bases and criteria provided by licenses for establishing AFWS requirements for flow to the steam generator(s) to assure adequate removal of reactor decay heat are not well defined or documented. The following is a comparison of the SL-2 AFS vs. the staff's flow requirements:

1. a. Identify the plant transient and accident conditions considered in establishing AFWS flow requirements, including the following events:	1. a. The design bases for the Auxiliary Feedwater System (AFS) are described in Subsection 10.4.9. The adequacy of the AFS during transient and accident conditions is shown in Chapter 15, for each event where AFS is required to function.
1. Loss of Main Feedwater (LMFW)	1. Although not a limiting design base event, a LMFW group is described in the Infrequent Category of the Decrease in Heat Removal by the Secondary System. No event in this LMFW event group is as severe as the Loss of Condenser Vacuum with Fast Transfer Failure event. Section 15.2 shows the required flow rates to be adequate assuming manual initiation. This analysis is more conservative than consideration of automatic initiation.
2. LMFW With Loss of Offsite AC Power	2. For this event the required flow rate is less than that for the LMFW event since the reactor trip is not delayed until secondary inventory is decreased to the low level setpoint.
3. LMFW With Loss of Onsite and Offsite AC Power	3. For this event the required flow rate is identical to that required for LMFW with a loss of offsite power. In the remote case of failure of both onsite and offsite AC power, the required flow is then delivered by the turbine driven AFW pump.
4. Plant Cooldown	4. As a limiting design base event, each AFW pump (1 turbine pump or 1 motor pump) has sufficient capacity to maintain the plant in a hot standby condition for two hours followed by an orderly cooldown to the shutdown cooling window within the next five hours.
5. Turbine Trip With and Without Bypass	5. Although not a limiting design base event for determining AFW pump capacity, the adequacy of AFW flow for turbine trip without bypass is shown for a more limiting event in Section 15.2. A turbine trip with the steam bypass system available will not result in actuation of the AFWS.
6. Main Steam Isolation Valve Closure.	6. This transient is similar to and produces effects no more adverse than the Loss of Condenser Vacuum discussed in Item 1.a.1 above.

TABLE 10.4.9A-1 (Cont'd)

1. a.	7. Main Feedline Break (MFLB)	1. a.	7. The MFLB is a limiting design base event for the Auxiliary Feedwater System. When considered in conjunction with the single failure of the turbine driven pump only the motor driven pump associated with the intact steam generator is available without operator action. Figures 10.4.9A-3 through 10.4.9A-10 show that one motor driven pump with a capacity of 275 gpm will maintain the steam generator as an adequate heat sink based upon the best estimate transient analyses provided in Section 10.4.9A.2.
	8. Main Steam Line Break		8. The Main Steam Line Break (MSLB) accidents are analyzed in Section 15.1.The rapid depressurization of the affected steam generator results in the actuation of a Main Steam Isolation Signal (MSIS). This MSIS results in closure of the Main Steam Isolation Valves and the Main Feedwater Isolation Valves, isolates the unaffected steam generator from blowdown, and effectively assures the unaffected steam generator's capability as a heat sink. The UFSAR analyses show manual operation of AFWS to the intact Steam Generator at greater than 600 seconds after the initiating event to be adequate. With respect to heat removal, that analysis is more conservative than consideration of automatic initiation.
	9. Small Break LOCA		9. This transient produces effects no more adverse on the secondary than the LMFW trip event, since primary energy inventory is partly released through the break and reactor occurs prior to a steam generator low level condition.
	10. Other Transient or Accidents Not Listed Above		10. a. Plant Startup AFW flow requirement is less than that required for plant cooldown. b. Hot Standby and Hot Shutdown. Although not a design base event for determining AFW pump capacity, the AFW system is placed in operation to maintain steam generator water level. Pump flow requirement is less than that required for plant cooldown
1. b.	Describe the plant protection acceptance criteria and corresponding technical bases used for each initiating event identified above. The acceptance criteria should address the following plant limits:	1. b.	
	1. RCS Pressure		1. The Reactor Coolant Pressure Boundary (RCPB) is designed to accommodate the system pressures and temperatures attained under all expected modes of unit operation, including all anticipated transients, and to maintain the stresses within applicable limits. The design meets the requirements of the ASME Code, Section III, Division 1. The following specific criteria evolve from the ASME Code requirements.

TABLE 10.4.9A-1 (Cont'd)

1. b.	1. RCS Pressure (Cont'd)	1. b.	1. (Cont'd) Level B - Upset Condition - the maximum stress will not exceed 110% of the design value. Level C - Emergency Condition - the maximum stress will not exceed 120% of the design value. For the events discussed in 1.a, above, in all cases except the Main Feed Line Break the maximum RCS pressure result in stresses below the level B limit.
	2. Fuel Temperature of Damage Limits		2. Response to item 1.a has shown that adequate system cooling is provided by the AFWS. Therefore, the fuel temperature or damage limits as described in Chapter 15 are not approached.
	3. RCS Cooling Rate		3. The RCS is designed to withstand the cyclic loads generated by the pressure and temperature transients of normal startup and shut-down. The AFWS assessment performed here is based on assumed maximum loads to ensure the ability of the AFWS to maintain cooling. An analysis concerning excessive primary shrinkage would entail assumptions of minimum heat loads which are not germane to sizing the AFWS. The operator will adjust the AFW flow rate, as required, to match the heat load.
	4. Steam Generator Water Level		4. Steam generator water level is not an explicit acceptance criterion of the UFSAR analyses. However, analyses shows the sufficient steam generator water level is maintained in either or both steam generator(s) until the RCS temperature is reduced to the shutdown cooling, initiation threshold. At inventories less than 30,000 lbm some increase in primary temperatures will occur due to the reduced heat transfer area.
2.	Describe the analyses and assumptions and corresponding technical justification used with plant conditions considered in 1.a. above including:	2.	
	a. Maximum reactor power (including instrument error allowance) at the time of the initiating transient or accident.		a. The reactor power, including instrument error, at the time of the initiating event is conservatively assumed to be 3030 MWt, with uncertainty.
	b. The delay from initiating event to reactor trip.		b. The time delay from the initiating event to the reactor trip for the MFLB is 18.50 seconds for Low Tavg with AC Power case and 18.50 seconds for Low Tavg with LOOP case.

TABLE 10.4.9A-1 (Con't)

	c. Plant parameter(s) which initiates AFWS flow and time delay between initiating event and introduction of AFWS into steam generator(s).	c. For the current plant design, AFWS time delay is initiated on low steam generator level signal. If level is not restored above the actuation bistable (first) reset when the time delay expires, the AFWS actuates to restore steam generator level. AFW flow is assumed to reach the steam generator within 420 seconds after the AFWS is actuated.
	d. Minimum steam generator water and when initiating event occurs.	d. The minimum water level in the unfaulted SG does not reach a dry-out condition for all cases.
2.	e. Initial steam generator water inventory and depletion rate before and after AFWS flow commences - identify reactor decay heat rate used.	2. e. For the MFLB event, the initial inventory and depletion rates are immaterial since the water level must reach the low level setpoint prior to the reactor trip occurring. Once the AFW flow reaches the steam generator(s), sufficient AFW pump capacity exists to remove decay heat and maintain an appropriate steam generator water level assuming decay heat for a full-power history.
	f. Maximum pressure at which steam is released from generator(s) against which the AFW pump must develop sufficient head.	f. The maximum steady state steam generator pressure expected is 1000 psia.
	g. Minimum number of steam generators that must receive AFW flow; e.g. 1 out of 2?	g. Only one steam generator is required to remove sensible and decay heat during all operational transients and accidents.
	h. RC flow condition - continued operation of RC pumps or natural circulation.	h. For the case with AC power available, all RCPs are assumed to be manually tripped at 15 minutes into the event. For the case with the LOOP, the RCP trip occurs as a result of the LOOP following reactor trip.
	i. Maximum AFW inlet temperature.	i. 120F
	j. Following a postulated steam or feedline break, time delay assumed to isolate break and direct AFW flow to intact steam generator(s). AFW pump flow capacity allowance to accommodate the time delay and maintain minimum steam generator level. Also identify credit taken from primary system heat removal due to blowdown.	j. For postulated steam line breaks an early reactor trip and MSIS occurs on low steam generator pressure. This minimizes the time to isolate the break. The ensuing pressure difference between steam generators will isolate the AFW from the break and direct it to the unaffected steam generator when actuated. For feedline breaks the reactor trip and AFAS occur early on low level due to two-phase flow out of the break. This minimizes time before delivery of AFW flows. The absence of a pressure differential until the low pressure setpoint is reached means that AFW flow is delivered to both steam generators, preserving the heat sink. When the low pressure setpoint is reached all AFW flow will be delivered to the unaffected steam generator.
	k. Volume and maximum temperature of water in main feedlines between steam generator(s) and AFWS connection to main feedline.	k. The initial main feedwater temperature is assumed to be 441.0ºF. For the MFLB case main feedwater is assumed to be unavailable to both steam generators. When AFW flow is assumed to enter the steam generator, no credit is taken for the volume of feedwater than would normally be available In the feedline between the steam generator and the AFW system connection.

TABLE 10.4.9A-1 (Cont'd)

l. Operating condition of steam generator normal blowdown following initiating event.	l. There is a constant SG blowdown flowrate of 120 gpm/SG following initiating event.
m. Primary and secondary system water and metal sensible heat used for cooldown and AFW flow sizing.	m. 1,309,000 BTU/°F
n. Time of hot standby and time to cooldown RCS to RHR system cut in temperature to size AFW water source inventory.	n. The condensate storage tank water volume of 307,000 gal is adequate to ensure plant sensible heat removal in addition to 8 hours of decay heat removal. Assuming a maximum cooldown time of 4 hours, this allow for four hours at hot standby. (See Table 10.4-2).
3. Verify that the AFW pumps in your plant will supply the necessary flow to the steam generator(s) as determined by items 1 and 2 above considering a single failure. Identify the margin in sizing the pump flow to allow for pump recirculation flow, seal leakage and pump wear.	3. The AFW system calculations performed to determine the total delivered flow have utilized conservative assumptions to account for pump recirculation flow, seal leakage and any future pump wear. Conservative piping resistances were used in order to maximize the total system head loss. Also, no credit was taken for the positive effects of the fluid height of water in the condensate. The final system calculations, utilizing the conservatisms outlined above, predict a total margin of approximately 6% (see note 1) above the required flow, which is adequate to account for any future pump wear.

Note 1: The 2B AFW pump was identified as performing below the manufacturer pump curves during initial startup testing. As a result, the field data taken was used to re-analyze the AFW system for the degraded condition. The results, as presented in Appendix A to calculation NSSS-014, demonstrated the continued acceptability of the pump prior to initial plant operation. However, the analysis shows that only 2.7% margin remained for future pump degradation for motor driven AFW pump 2B. AFW pumps 2A and 2C retained the original design margin of 6.5% prior to initial plant operation.

0738W-1

TABLE 10.4.9A-2

DOCUMENT: SRP 10.4.9 (REV. 1) | AUXILIARY FEEDWATER SYSTEM (AFWS) | Sheet 1 of 5

ACCEPTANCE CRITERIA	COMPLIANCE	ALTERNATE COMPLIANCE	REMARKS
Acceptability of the design of the auxiliary feedwater system, as described in the applicants safety analysis report (SAR), is based on specific general design criteria and regulatory guides. Listed below are the specific criteria as they relate to the AFS.			The Unit 2 Auxiliary Feedwater System (AFWS) is designed to provide for automatic initiation. The following is a review of the AFWS which describes how the system meets SRP 10.4.9 and BTP ASB 10-1.
1. General Design Criterion 2, as related to structures housing the system and the system itself being capable of withstanding the effects of natural phenomena such as earthquakes, tornadoes, hurricanes and floods.	1. The Auxiliary Feedwater System, including the instrumentation and controls are designated seismic Category I, designed to withstand tornadoes and hurricanes and are located at an elevation above the probable maximum flood level. See Subsection 10.4.9.		
2. General Design Criterion 4, with respect to structures housing the system and the system itself being capable of withstanding the effects of external missiles and internally generated missiles, pipe whip, and jet impingement forces associated with pipe breaks.	2. The AFWS is located in the protected areas of the main-steam trestles. Tornado shielding is provided to completely enclose the AFWS, protecting it from all postulated tornado missiles. High energy lines are restrained to protect the AFWS from pipe whip and jet impingement effects.		
3. General Design Criterion 5, as related to the capability of shared systems and components important to safety to perform required safety functions.	3. The Unit 2 AFWS has no structures, systems or components important to safety which are shared with Unit 1. However, a Condition of License for Unit 1 included a commitment to provide an intertie with the Unit 2 Condensate Storage Tank (CST). Thus, the only "shared" component in the AFWS is the Unit 2 CST (capacity 400,000 gallons). A connection from the Unit 2 CST is provided to the suction		

0738W-2

TABLE 10.4.9A-2 (Cont'd)

DOCUMENT: SRP 10.4.9 (REV. 1) (Cont'd)

ACCEPTANCE CRITERIA	COMPLIANCE	ALTERNATE COMPLIANCE	REMARKS
	3. (Cont'd) of the Unit 1 AFWS pumps for the unlikely event that a tornado missile penetrates the top of the Unit 1 CST and destroys that source of water.		
4. General Design Criterion 19, as related to the design capability of system instrumentation and controls for prompt hot shutdown of the reactor and potential capability for subsequent cold shutdown.	4. Adequate instrumentation and controls are provided to assure the plant is brought to a hot standby condition and subsequent cold shutdown during both normal operation and under accident conditions, including a LOCA. The control of AFWS flow and SG level is accomplished by control room operated valves; however, local control stations are also provided. Instrumentation is also provided at the remote Hot Shutdown Panel, as indicated at Section 7.4 which provided capability for a prompt hot shutdown and capability for a subsequent cold shutdown using appropriate procedures.		4. The AFWS is designed such that an Automatic Feedwater Actuation Signal (AFAS-1 and AFAS-2) automatically starts all three AFWS pumps and opens the valves for both trains to both SG(s). In the event of a Main Feedwater line rupture, or an AFWS line break, the AFAS will automatically isolate the affected SG and will automatically feed to the intact SG(s). The operator has the capability to control AFW valves MV-09-9, 10,11,12 prior to AFAS. The operator can manually control these valves after an AFAS has been initiated and the valves reach their fully opened position.
5. General Design Criterion 44, to assure: a. The capability to transfer heat loads from the reactor system to a heat sink under both normal operating and accident conditions.	5a. During normal operation, the the AFWS provides a water inventory to the SGs for removal of decay and sensible heat to the Steam Dump and Bypass System (SDBS). Under accident conditions heat removal is via the Atmospheric Dump Valves (ADV). Two dc powered ADVs are provided on each steam generator for heat removal purposes.		

TABLE 10.4.9A-2 (Cont'd)

DOCUMENT: SRP 10.4.9 (REV. 1) (Cont'd)

Sheet 3 of 5

ACCEPTANCE CRITERIA	COMPLIANCE	ALTERNATE COMPLIANCE	REMARKS
b. Redundancy of components so that under accident conditions the safety function can be performed assuming a single active component failure. (This may be coincident with the loss of offsite power for certain events.)	5b. The AFWS is designated as seismic Category I, Safety Class 3 and capable of withstanding a single active component failure. A failure mode and effects analysis of the AFWS, including a high energy line break with loss of offsite power, is provided in Tables 10.4-3 and 10.4-4.		
c. The capability to isolate components, subsystems, or piping if required so that the system safety function will be maintained.	5c. Sufficient remote-manual features are provided to permit isolation of failed components and maintain AFW flow to the steam generators. The AFAS logic will detect a rupture in a MFW line or AFWS line and automatically isolate that line so that AFW flow is maintained to the intact steam generator(s).		
6. General Design Criterion 45, as related to design provisions made to permit periodic inservice inspection of system components and equipment.	6. Design provisions are provided to assure periodic ISI of the system as required. Removable insulation is provided on component welds which require examination. Access ports or temporary scaffolding is provided for examination of required welds.		
7. General Design Criterion 46, as related to design provisions made to permit appropriate functional testing of the systems and components to assure structural integrity and leak-tightness, operability and performance of active components, and capability of the integrated systems to function as intended during normal, shutdown, and accident conditions.	7. Design provisions are provided to assure that the Auxiliary Feedwater System can be tested. Each pump is provided with a recirculation line permitting verification of pump operability. Pressure and flow indicators are provided for monitoring system performance. All active components can be remotely operated using indication instrumentation to verify component functionality.		

TABLE 10.4.9A-2 (Cont'd)

DOCUMENT: SRP 10.4.9 (REV. 1) (Cont'd)

Sheet 4 of 5

ACCEPTANCE CRITERIA	COMPLIANCE	ALTERNATE COMPLIANCE	REMARKS
8. Regulatory Guide 1.26, as related to the quality group classification of system components.	8. The AFWS is designed Quality Group C in accordance with R. G. 1.26. Those portions of AFWS connected to the Main Feedwater line are QG B to the isolation valve(s).		
9. Regulatory Guide 1.29, as related to the seismic design classification of system components.	9. The AFWS is designated seismic Category I in accordance with R.G. 1.29.		
10. Regulatory Guide 1.62, as related to design provisions made for manual initiation of each protective action.	10. The AFWS complies with the requirements of Regulatory Guide 1.62. The operator may manually initiate the Automatic Feedwater Acutation Signal (AFAS) from the control room. Manual initiation ensures that protective action goes to completion.		
11. Regulatory Guide 1.102, as related to structures, systems, and components important to safety from the effects of flooding.	11. All AFWS components are located above the maximum probable flood level.		
12. Regulatory Guide 1.117, as related to the protection of structures, systems and components important to safety from the effects of tornado missiles.	12. The AFWS is located within the barrier of the main steam trestle which is completely protected from the effects of tornado missiles. The condensate storage tank is enclosed in a structure which protects the tank from tornado missiles.		
13. Branch Technical Positions ASB 3-1 and MEB 3-1, as related to breaks in high and moderate energy piping systems outside containment.	13. The AFWS is classified as a high energy system and is protected from the dynamic effects of pipe rupture and jet impingement.		

TABLE 10.4.9A-2 (Cont'd)

ACCEPTANCE CRITERIA	COMPLIANCE	ALTERNATE COMPLIANCE	REMARKS
14. Branch Technical Position ASB 10-1, as related to auxiliary feedwater pump drive and power supply diversity.	14. The AFWS consists of three Independent subsystems. Two motor driven pumps are provided, each powered from an independent source of ac power. One turbine driven pump is provided which is wholly independent of ac power and fails safe (attains full speed operation) on loss of dc power to the dc powered throttle valve.		

TABLE 10.4.9A-3

DESIGN GUIDELINES FOR AFWS PUMP DRIVE
AND POWER SUPPLY DIVERSITY FOR PWRS

BRANCH TECHNICAL POSITION	COMPLIANCE	ALTERNATE COMPLIANCE	REMARKS
1. The auxiliary feedwater system should consist of at least two full-capacity, independent systems that include diverse power sources.	1. The Auxiliary Feedwater System (AFWS) consists of two full capacity motor-operated pumps in one system and another redundant greater than full capacity turbine driven pump in the other system. One system is ac powered and the other is steam/dc power.		
2. Other powered components of the auxiliary feedwater system should also use the concept of separate and multiple sources of motive energy. An example of the required diversity would be two separate auxiliary feedwater trains, each capable of removing the afterheat load of the reactor system, having one separate train powered from either of two ac sources and the other train wholly powered by steam and dc electric power.	2. The motor driven systems (pumps, valves) are powered by independent ac systems whereas the turbine driven system (pumps, valves) will be wholly powered by the dc system and steam. Each train provides sufficient capability of cooling the RCS to the temperature and pressure required for initiation of shutdown cooling.		
3. The piping arrangement, both intake and discharge, for each train should be designed to permit the pumps to supply feedwater to any combination of steam generators. This arrangement should take into account pipe failure, active component failure, power supply failure, or control system failure that could prevent system function. One arrangement that would be acceptable is crossover piping containing valves that can be operated by remote control from the control room, using the power diversity principle for the valve operators and actuation systems.	3. The piping arrangement, both intake and discharge, permits feedwater to any combination of SGs. No single active failure and/or any high energy line failure can prevent the AFWS from automatically delivering flow to either steam generator.		3. Power diversity is arranged such that motor-driven AFWS train "A" is powered by ac safety bus "SA" which is automatically loaded on diesel generator 2A; the similar train "B" is on bus "SB" and loaded on DG 2B. The turbine-driven pump control circuits and flow control valves are powered from 125VDC busses.

TABLE 10.4.9A-3 (Cont'd)

DOCUMENT: BTP ASB 10-1 (REV. 1) (Cont'd)

BRANCH TECHNICAL POSITION	COMPLIANCE	ALTERNATE COMPLIANCE	REMARKS
4. The Auxiliary Feedwater System should be designed with suitable redundancy to offset the consequences of any single active component failure, however, each train need not contain redundant active components.	4. The AFWS is designed such that no single active failure can prevent the AFWS from automatically delivering flow to either steam generator.		
5. When considering a high energy line break, the system should be so arranged as to assure the capability to supply necessary emergency feedwater to the steam generators, despite the postulated rupture of any high energy section of the system, assuming a concurrent single active failure.	5. No high energy line break (with loss of offsite power) in conjunction with any single active failure can prevent the AFWS from automatically delivering flow to the intact steam generator. The AFWS piping is arranged such that a full capacity motor driven pump can feed its respective steam generator. In addition, one turbine driven pump and cross-connect piping is provided to feed both steam generators.		

TABLE 10.4.9A-4

EVALUATION OF THE SL 2 AUXILIARY FEEDWATER SYSTEM
VERSUS THE NRC AFW SHORT AND LONG TERM RECOMMENDATIONS

A. Short Term Recommendations

ACCEPTANCE CRITERIA	COMPLIANCE
1) 5.2.1 Technical Specification Time Limit on AFW System Train Outage	
Concern - Several of the plants reviewed have Technical Specifications that permit one of the AFW system trains to be out of service for an indefinite time period. Indefinite outage of one train reduces the defense-in-depth provided by multiple AFW system trains.	
Recommendation GS-1 - The licensee should propose modifications to the Technical Specifications to limit the time that one AFW system pump and its associated flow train and essential instrumentation can be inoperable. The outage time limit and subsequent action time should be as required in current Standard Technical Specifications; i.e., 72 hours, respectively.	The Auxiliary Feedwater System limiting conditions for operation and surveillance requirements will be that an inoperable AFS train be restored to operable status in 72 hours or be in hot shutdown within the next 12 hours. This is in accordance with current standard Technical Specifications.
2) 5.2.2 Technical Specification Administrative Controls on Manual Valves - Lock and Verify Position	
Concern - Several of the plants reviewed use a single manual valve or multiple valves in series in the common suction piping between the primary water source and the AFW system pump suction. At some plants the valves are locked open, while at others, they are not locked in position. If the valves are inadvertently left closed, the AFW system would be inoperable, because the water supply to the pumps would be isolated. Since there is no remote valve position indication for these valves, the operator has no immediate means of determining valve position.	
Further, the Technical Specifications for plants with locked-open manual do not require periodic inspection to verify that	

TABLE 10.4.9A-4 (Cont'd)

ACCEPTANCE CRITERIA	COMPLIANCE
the valves are locked in the correct position. For most plants where the valves are not locked open, valve position is verified on some periodic basis.	Not applicable. The Auxiliary Feedwater System has redundant, parallel flow paths (piping and valves) such that there is no single valve which if left closed, could interrupt all flow.
Recommendation GS-2 - The licensee should lock open single valves or multiple valves in series in the AFW pump suction piping and lock open other single valves or multiple valves in series that could interrupt all AFW flow. Monthly inspections should be performed to verify that these are located in the open position. These inspections should be proposed for incorporation into the surveillance requirements of the plant Technical Specifications. See Recommendation GL-2 for the longer-term resolution of this concern.	All manually operated valves in AFS suction are locked open.
3) 5.2.3 AFW System Flow Throttling-Water Hammer	
Concern - Several of the plants reviewed apparently throttle down the AFW system initial flow to eliminate or reduce the potential for water hammer. In such cases, the overall reliability of the AFW system can be adversely affected.	
Recommendation GS-3 - The licensee has stated that it throttles AFW system flow to avoid water hammer. The licensee should re-examine the practice of throttling AFW system flow to avoid water hammer.	The Auxiliary Feedwater System does not throttle flow to avoid water hammer. The AFS will supply on demand sufficient initial flow to assure adequate decay heat removal. Water hammer considerations have been taken into account in the final design by the use of steam generator sparger and "J" tube design and the feedwater piping design.
The licensee should verify that the AFW system will supply on demand sufficient initial flow to the necessary generators to assure adequate decay heat removal following loss of main feedwater flow and reactor trip from 100% power. In cases where this reevaluation results in an increase in initial AFW system flow, the licensee should provide sufficient information to demonstrate that the required initial AFW system flow will not result in plant damage due to water hammer.	
4) 5.2.4 Emergency Procedures for Initiating Backup Water Supplies	
Concern - Most of the plants do not have written procedures for transferring to alternate sources of AFW supply if primary supply is unavailable or exhausted. Without specific criteria and procedures for an operator to follow to transfer to alternate water sources, the primary supply could be exhausted and result in pump damage or a long interruption of AFW flow.	

TABLE 10.4.9A-4 (Cont'd)

ACCEPTANCE CRITERIA	COMPLIANCE
Recommendation GS-4 - Emergency procedures for transferring to alternate sources of AFW supply should be available to the plant operators. These procedures should include criteria to inform the operator when, and in what order, the transfer to alternate water sources should take place. The following cases should be covered by the procedures: (1) The case in which the primary water supply is initially available. The procedures for this case should include any operator action required to protect the AFW system pumps against self-damage before water flow is initiated. (2) The case in which the primary water supply is being depleted. The procedure for this case should provide for transfer to the alternate water sources prior to draining of the primary water supply.	1) The Auxiliary Feedwater Pump suctions are maintained filled with water at all times. The only valves in the suction lines are manually operated and are maintained locked open. Thus AFW supply to the pump is always assured without the need for operator intervention. 2) The primary AFW supply for SL-2 is the Condensate Storage Tank (CST). The CST is a seismic Category I, Safety Class 3 structure which is entirely enclosed to protect it from the effects of tornado missiles. This tank maintains at all times sufficient condensate to bring both Units I and 2 to shutdown cooling entry conditions. Additional tank margin is available to satisfy normal plant operational requirements. The CST is provided with qualified and redundant level alarms to ensure that sufficient water is available at all times to shutdown Units I and 2. An adequate source of cooling water is thus assured under all postulated conditions. Should an alternate AFW source be desired the Primary Water and City Water Storage Tanks are available on site. The contents of these tanks could be transferred to the CST using temporary hose connections in conjunction with either a diesel driven or motor driven fire pump. The motor driven pump(s) can be powered from the emergency power source. Note - the pumps are powered from Unit 1 ESF busses; thus, under LOOP conditions for Unit 1, they may be started, if needed, after 35 seconds.
5) 5.2.5 Emergency Procedures for Initiating AFW Flow Following a Complete loss of Alternating Current Power Concern - Some operating plants depend on ac power for all sources of AFW system supply including turbine-driven pump train. In the event of loss of offsite and onsite ac power, ac-dependent lube oil supply or lube oil cooling for the pump will stop, and/or manual actions are required to initiate AFW flow from the turbine-driven pump by manually opening the turbine steam admission valve and/or AFW system flow control valves. There are no procedures available to the plant operators for AFW system initiation and control under these conditions. This could result in a considerable time delay for AFW system initiation, since the operators would not be guided by procedures dealing with this event.	

TABLE 10.4.9A-4 (Cont'd)

ACCEPTANCE CRITERIA	COMPLIANCE
Recommendation GS-5 - The as-built plant should be capable of providing the required AFW flow for at least two hours from one AFW pump train, independent of any ac power source. If manual AFW system initiation or flow control is required following a complete loss of ac power, emergency procedures should be established for manually initiating and controlling the system under these conditions. Since the water for cooling of the lube oil for the turbine-driven pump bearings may he dependent on ac power, design or procedural changes shall be made to eliminate this dependency as soon as practicable. Until this is done, the emergency procedures should provide for an individual to be stationed at the turbine-driven pump in the event of the loss of all ac power to monitor pump	The AFS turbine driven pump is independent of ac power. Lube oil and cooling water supply is internal to the pump and therefore requires no safety related ac powered oil pump. The turbine steam supply valves are powered by dc power each from a redundant vital dc bus. (Solenoid valves are used in the bypass line.)

TABLE 10.4.9A-4 (Cont'd)

ACCEPTANCE CRITERIA	COMPLIANCE
bearing and/or lube oil temperatures. If necessary, this operator would operate the turbine-driven pump in an on-off mode until ac power is restored. Adequate lighting powered by direct current (dc) power sources and communications at local stations should also be provided if manual initiation and control of the AFW system is needed. (See Recommendation GL-3 for the longer term resolution of this concern.)	The AFS system pipeline from the turbine driven pump to the steam generator consists of two branches, each with an isolation valve and a flow control valve. These valves are controlled by redundant, Class 1E 125V dc buses.
6) 5.2.6 AFW System Flow Path Verification	
Concern - Periodic testing of the AFW system is accomplished by testing of individual components of one flow train (periodic pump recirculation flow test or automatic valve actuation), thus altering the normal AFW system flow path(s). The flow capability of the entire AFW system, or at least one integral AFW system train, is only demonstrated on system demand following a transient, or if the AFW system is used for normal plant startup or shutdown.	
Recent Licensee Event Reports indicate a need to improve the quality of system testing and maintenance. Specifically, periodic testing and maintenance procedures inadvertently result in (1) more than one AFW system flow train being unavailable during the test, or (2) the AFW system flow train under test not being properly restored to its operable condition following the test or maintenance work. The Office of Inspection and Enforcement has taken action to correct Item (1): the recommendation below is made to correct Item (2).	
Recommendation GS-6 - The licensee should confirm flow path availability of an AFW system flow train that has been out of service to perform periodic testing or maintenance as follows:	
(1) Procedures should be implemented to require an operator to determine that the AFW system valves are properly aligned and a second operator to independently verify that the valves are properly aligned.	1) AFS system testing is accomplished by allowing the AFW pumps to deliver flow back to the CST through the minimum flow recirculation line. This is carried out in normal system alignment, and none of the measurements to be taken affect pump operation. If a system demand occurred during the test, the pumps would continue to run. Thus, an operator is not required to verify valve alignment after system testing. Maintenance procedures will be implemented requiring operator to determine that the AFS are properly aligned and a

TABLE 10.4.9A-4 (Cont'd)

ACCEPTANCE CRITERIA	COMPLIANCE
	second operator to independently verify that the valves are properly aligned after system maintenance.
(2) The licensee should propose Technical Specifications to assure that, prior to plant startup following an extended cold shutdown, a flow test would be performed to verify the normal flow path from the primary AFW system water source to the steam generators. The flow test should be conducted with AFW system valves in their normal alignment.	(2) Technical Specifications will be proposed to assure that, prior to plant startup following any cold shutdown 30 days or longer, or where an AFS flow train has been out of service for testing or maintenance, a test will be performed to verify the normal flow path from the primary AFS water source to the steam generators. This flow test will be conducted during cold shutdown, with AFS valves in the normal alignment for the AFS flow from the primary water source to the steam generators.
7) 5.2.7 Non-Safety Grade, Non-Redundant AFW System Automatic Initiation Signals	
Concern - Some plants with an automatically initiated AFW system utilize some initiation signals that are not safety-grade do not meet the single failure criterion, and are not required by the Technical Specification to be tested periodically. This can result in reduced reliability of the AFW system	
Recommendation GS-7 - The licensee should verify that the automatic start AFW system signals and associated circuitry are safety-grade. If this cannot be verified, the AFW system automatic initiation system should be modified in the short-term to meet the functional requirements listed below. For the longer-term, the automatic initiation signals and circuits should be upgraded to meet safety-grade requirements, as indicated in Recommendation GL-5.	The Auxiliary Feedwater System signals and circuits all safety related Class 1E. The AFS is in accordance with Recommendation GS-7.
(1) The design should provide for the automatic initiation of the AFW system flow.	
(2) The automatic initiation signals and circuits should be designed so that a single failure will not result in the loss of AFW system function.	
(3) Testability of the initiation signals and circuits shall be a feature of the design.	

TABLE 10.4.9A-4 (Cont'd)

ACCEPTANCE CRITERIA	COMPLIANCE
(4) The initiation signals and circuits should be powered from the emergency buses.	
(5) Manual capability to initiate the AFW system from the control room should be retained and should be implemented so that a single failure in the manual circuits will not result in the loss of system function.	
(6) The ac motor-driven pumps and valves in the AFW system should be included in the automatic actuation (simultaneous and/or sequential) of the loads to the emergency buses.	
(7) The automatic initiation signals and circuits shall be designed so that their failure will not result in the loss of manual capability to initiate the AFW system from control room.	
8) 5.2.8 Automatic Initiation of AFW Systems	
Concern - For plants with a manually initiated AFW system, there is the potential for failure of the operator to manually actuate the system following a transient in time to maintain the steam generator water level high enough to reassure reactor decay heat removal via the steam generator(s). While IE bulletin 79-06A requires a dedicated individual for W-designed operating plants with a manually initiated AFW system, further action should be taken in the short-term. This concern is identical to Item 2.1.7a of NUREG-0578.	
Recommendation GS-8 - The licensee should install a system to automatically initiate AFW system flow. This system need not be safety-grade; however, in the short-term, it should meet the criteria listed below, which are similar to Item 2.1.7a of NUREG-0578. For the longer-term, the automatic initiation signals and circuits should be upgraded to meet safety-grade requirements, as indicated in Recommendation GL-2.	The Auxiliary Feedwater System is automatically initiated. The AFS design is in accordance with Recommendation GS-8.
(1) The design should provide for the automatic initiation of the AFW system flow.	
(2) The automatic initiation signals and circuits should be designed so that a single failure will not result in the loss of AFW system function.	
(3) Testability of the initiating signals and circuits should be a feature of the design.	

TABLE 10.4.9A-4 (Cont'd)

ACCEPTANCE CRITERIA	COMPLIANCE
(4) The initiating signals and circuits should be powered from the emergency buses.	
(5) Manual capability to initiate the AFW system from the control room should be retained and should be implemented so that a single failure in the manual circuits will not result in the loss of system function.	
(6) The ac motor-driven pumps and valves in the AFW system should be included in the automatic actuation (simultaneous and/or sequential) of the loads to the emergency buses.	
(7) The automatic initiation signals and circuits should be designed so that their failure will not result in the loss of manual capability to initiate the AFW system from the control room.	
9) 5.3.1 Primary AFW Water Source Low Level Alarm	
Concern - Plants which do not have level indication and alarm for the primary water source may not provide the operator with sufficient information to properly operate the AFW system.	
Recommendation - The licensee should provide redundant level indication and low level alarms in the control room for the AFW system primary water supply, to allow the operator to anticipate the need to make up water or transfer to an alternate water supply and prevent a low pump suction pressure condition from occurring. The low level alarm setpoint should allow at least 20 minutes for operator action, assuming that the largest capacity AFW pump is operating.	The Condensate Storage Tank (CST) the primary EFS water source, has redundant, safety grade level indication and low level alarms in the control room. The low level alarm setpoint is at the Technical Specifications minimum volume (307,000 gal). A low-low level alarm is initiated in the control room when the water inventory in the CST is depleted to 14,000 gallons (above dead volume). This amount is sufficient to supply water to one 500 gpm capacity turbine driven pumps for at least 25 minutes.
10) 5.3.2 AFW Pump Endurance Test	
Concern - Since it may be necessary to rely on the AFW system to remove decay heat for extended periods of time, it should be demonstrated that the AFW pumps have the capability for continuous operation over an extended period without failure.	

TABLE 10.4.9A-4 (Cont'd)

ACCEPTANCE CRITERIA	COMPLIANCE
Recommendation - The licensee should perform a 72 hour endurance test on all AFW system pumps, if such a test or continuous period of operation has not been accomplished to date. Following the 72 hour pump run, the pumps should be shut down and cooled down and then restarted and run for one hour. Test acceptance criteria should include demonstrating that the pumps remain within design limits with respect to bearing/ bearing oil temperatures and vibration and that pump room ambient conditions (temperature, humidity) do not exceed environmental qualification limits for safety related equipment in the room.	A 48 hour endurance test will be performed on the Auxiliary Feedwater pumps. Test results will be submitted to the NRC.
11) 5.3.3 Indication of AFW Flow to the Steam Generators	
Concern - Indication of AFW flow to the steam generators is considered important to the manual regulation of AFW flow to maintain the required steam generator water level. This concern is identical to Item 2.1.7.b of NUREG-0578.	
Recommendation - The licensee should implement the following requirements as specified by Item 2.1.7.b on page A-32 of NUREG-0578: (1) Safety-grade indication of AFW flow to each steam generator should be provided in the control room. (2) The AFW flow instrument channels should be powered from the emergency buses consistent with satisfying the emergency power diversity requirements for the AFW system set forth in Auxiliary Systems Branch Technical Position 10-1 of the Standard Review Plan, Section 10.4.9.	Safety grade Auxiliary Feedwater flow indication and safety grade, redundant steam generator level indication is available to the operator in the control room. These instrument loops are powered by the 120V ac Class 1E power source.
12) 5.3.4 AFW System Availability During Periodic Surveillance Testing	
Concern - Some plants require local manual realignment of valves to conduct periodic pump surveillance tests on one AFW system train. When such plants are in this test mode and there is only one remaining AFW system train available to respond to a demand for initiation of AFW system operation, the AFW system redundancy and ability to withstand a single failure are lost.	
Recommendation - Licensees with plants which require local manual realignment of valves to conduct periodic tests on one AFW system train and which have only one remaining AFW train available for operation should propose Technical	Not applicable. Local manual realignment of valves to conduct periodic pump surveillance tests on AFS trains is not required.

TABLE 10.4.9A-4 (Cont'd)

ACCEPTANCE CRITERIA	COMPLIANCE
Specifications to provide that a dedicated individual who is in communication with the control room be stationed at the manual valves. Upon instruction from the control room, this operator would realign the valves in the AFW system from the test mode to its operational alignment.	(Refer to response to short term recommendation GS-6).
B. 5.4 Long-Term Recommendations	
1) 5.4.1 Automatic Initiation of AFW Systems	
Concern - This concern is the same as short-term generic recommendation GS-8; namely, failure of an operator to actuate a manual start AFW in time to maintain steam generator water level high enough to assure decay heat removal via the steam generator(s).	
Recommendation GL-1 - For plants with a manual AFW system, the licensee should install a system to automatically initiate the AFW system flow. This system and associated automatic initiation signals should be designed and installed to meet safety-grade requirements. Manual AFW system start and control capability should be retained with manual start serving as backup to automatic AFW system initiation.	Not applicable. The AFS initiation is automatic, safety grade, and redundant.
2) 5.4.2 Single Valves in the AFW System Flow Path	
Concern - This is the same short-term generic recommendation GS-2 - namely, AFW system inoperability due to an inadvertently closed manual valve that could interrupt all AFW system flow.	
Recommendation GL-2 - Licensees with plant design in which all (primary and alternate) water supplies to the AFW systems pass through valves in the single flow path should install redundant parallel flow paths (piping and valves).	Not applicable. The AFS system has redundant, parallel flow paths (piping and valves) so that there is no single valve which if left closed, could interrupt all flow. All manually operated valves in AFS suction are locked open.
Licensees with plant designs in which the primary AFW system water supply passes through valves in a single flow path, but the alternate AFW system water supplies connect to the AFW system pump suction piping downstream of the above valve(s), should install redundant valves parallel to the above valve(s) or provide automatic opening of the valve(s) from the alternate water supply upon low pump suction pressure.	
The licensee should propose Technical Specifications to incorporate appropriate periodic inspections to verify the valve positions into the surveillance requirements.	

TABLE 10.4.9A-4 (Cont'd)

ACCEPTANCE CRITERIA	COMPLIANCE
3) 5.4.3 Elimination of AFW System Dependency on Alternating Current Power Following A Complete Loss of Alternating Current Power	
Concern - This concern is the same as short-term generic recommendation GS-5 namely, delay in initiation of AFW system operation or maintaining AFW system operation following a postulated loss of onsite and offsite ac power; i.e., ac power blackout.	
Recommendation GL-3 - At least one AFW system pump and its associated flow path and essential instrumentation should automatically initiate AFW system flow and be capable of being operated independently of any ac power source for at least two hours. Conversion of dc power to ac power is acceptable.	The AFS turbine driven pump is dc controlled and capable of being operated independently of ac power for at least two hours. The turbine steam supply valves are motor operated, powered by dc power, each from a redundant vital dc bus. (Solenoid valves are used in the bypass line.) The AFS system pipeline from the turbine driven pump to each steam generator consists of two branches, each with an isolation valve and a flow control valve. These valves are controlled by redundant, Class 1E, 125V dc buses.
4) 5.4.4 Prevention of Multiple Pump Damage due to Loss of Suction Resulting From Natural Phenomena	
Concern - In many of the operating plants, the normal water supply to the AFW system pumps (including the interconnected piping) is not protected from earthquakes or tornadoes. Any natural phenomenon severe enough to result in a loss of the water supply could also be severe enough to cause a loss of offsite power with loss of main feedwater, resulting in an automatic initiation signal to start the AFW system pumps. The pumps would start without any suction head, leading to cavitation and multiple pump damage in a short period of time, possibly too short for the operators to take action that would protect the pumps. This may lead to unacceptable consequences for some plants, due to a complete loss of feedwater (main and auxiliary).	
Recommendation GL-4 - Licensees having plants with unprotected normal AFW system water supplied should evaluate the design of their AFW systems to determine if automatic protection of the pumps is necessary following a seismic event or a tornado. The time available before pump damage, the alarms and indications available to the control room	The CST is housed in a separate seismic Category I structure which has been designed to withstand the effects of tornados or tornado induced missiles.

TABLE 10.4.9A-4 (Cont'd)

ACCEPTANCE CRITERIA	COMPLIANCE
operator, and the time necessary for assessing the problem and taking action should be considered in determining whether operator action can be relied on to prevent pump damage. Consideration should be given to providing pump protection by means such as automatic switchover of the pump suctions to the alternate safety-grade source of water, automatic pump trips on low suction pressure, or upgrading the normal source of water to meet seismic Category I and tornado requirements.	The AFS pumps, piping valves and associated circuitry are designed seismic Category I and are located in the seismic Category I steam trestle structure which has been designed to withstand the effects of tornado induced missile.
5) 5.4.5 Non-Safety Grade, Non-Redundant AFW System Automatic Initiation Signals	
Concern - This concern is the same as short-term generic recommendation GS-7 - namely, reduced AFW system reliability as a result of use of non-safety-grade, non-redundant signals, which are not periodically tested, to automatically initiate the AFW system.	
Recommendation GL-5 - The licensee should upgrade the AFW system automatic initiation signals and circuits to meet safety-grade requirements.	The AFS automatic initiation signals and circuits are safety-grade.

TABLE 10.4.9A-5

St. Lucie 2 Loss of Feedwater With Offsite Power Available
Sequence of Events

Time (sec)	Event	Setpoint/Value
0.0 - 20.0	Steady state period	
20.0	Loss of feedwater to both steam generators	
57.8	Reactor trip signal on high pressurizer pressure	2370 psia
57.8	PORV actuates	
58.2	Reactor trip	
60.2	Turbine trip*	
63.7	Low steam generator level auxiliary feedwater actuation signal setpoint reached	13.0% NRS
393.7	Auxiliary feedwater flow reaches the steam generators	275 gpm/SG
920.0	Operators take action to trip RCPs**	EC289558
950.0	Maximum pressurizer level	1504 ft^3
937.5	Minimum steam generator inventory	14,459 lbm/SG
3620.0	Operator takes action to commence plant cooldown (1 hr from start of event)	

* Turbine Trip is not credited in the transient analysis. The 2.0 second delay does not impact the results.
** The accident analysis conservatively assumes 900 seconds operator action time to trip all RCPs based on the SG level in both SGs falling well below 20%NR within the first minute. The required operator action is thus to trip all RCPs once the levels in both SGs fall below 20%NR. EC289558

TABLE 10.4.9A-6

St. Lucie 2 Loss of Feedwater With Loss of Offsite Power
Sequence of Events

Time (sec)	Event	Setpoint/Value
0.0 - 20.0	Steady state period	
20.0	Loss of feedwater to both steam generators	
57.4	Reactor trip signal on high pressurizer pressure	2370 psia
57.4	PORV actuates	
57.8	Reactor trip	
59.8	Turbine trip*	
59.8	Loss of offsite power	
63.3	Low steam generator level auxiliary feedwater actuation signal setpoint reached	13.0% NRS
393.3	Auxiliary feedwater flow reaches the steam generators	275 gpm/SG
867.5	Minimum steam generator inventory	14,938 lbm/SG
10125	Maximum pressurizer level	1123 ft^3
3620.0	Operator takes action to commence plant cooldown (1 hr from start of event)	

* Turbine Trip is not credited in the transient analysis. The 2.0 second delay does not impact the results.

TABLE 10.4.9A-7

St. Lucie 2 Feedwater Line Break for Low Tavg Case with Offsite Power Available
Sequence of Events

Time (Sec)	Event	Setpoint/Value
20.00	Instantaneous loss of feedwater to the affected SG; FLB occurs in the MFW line between the Loop 1 SG and the last check valve	1.23 ft^2
36.89	Low SG level setpoint reached	4% NR
38.10	Reactor trip breakers open	> 1.15 second delay
38.50	Reactor trip breakers open	0.40 second delay
39.24	CEA release	0.74 second delay
40.50	Turbine Trip	2.0 second delay
45.65	Unaffected SG MFIV closes	---
112.42	Loop 2 SG reaches MSI setpoint	487 psia
119.17	MSIVs completely closed	---
128.00	Minimum pressurizer liquid volume	110.7 ft^3
147.96	Loop 1 SG dryout	< 500 lbm
616.79	Loop 2 SG level reaches AFW actuation setpoint	4.0% NRS
920.00	All RCPs Manually Tripped	15 minutes
1036.70	Loop 2 SG minimum inventory	16,332 lbm
1036.79	AFW reaches Loop 2 SG	420 sec
1820.00	Maximum pressurizer volume	1358 ft^3
1820.01	Operator takes actions to stabilize the plant (1800 sec. after transient initiation)	---

TABLE 10.4.9A-8

St. Lucie 2 Feedwater Line Break for Low Tavg Case with Loss of Offsite Power
Sequence of Events

Time (sec)	Event	Setpoint/Value
20.00	Instantaneous loss of feedwater to the affected SG; FLB occurs in the MFW line between the Loop 1 SG and the last check valve	1.23 ft^2
36.89	Low SG level setpoint reached	4.0% NR
38.10	Reactor Trip on Low SG Level	> 1.15 second delay
38.50	Reactor trip breakers open	0.40 second delay
39.24	CEA release	0.74 second delay
40.50	Turbine trip	2.0 second delay
40.50	Loss of offsite power	---
45.66	Unaffected SG MFIV closes	---
84.19	Loop 2 SG reaches MSI setpoint	487 psia
90.94	MSIVs completely closed	---
118.80	Loop 1 SG dryout	< 500lbm
124.00	Minimum pressurizer liquid volume	544 ft^3
965.82	Loop 2 SG level reaches AFW actuation point	4.0% NRS
1385.20	Loop 2 SG minimum inventory	15896 lbm
1385.82	AFW reaches Loop 2 SG	420 sec
1820.00	Maximum pressurizer volume	1446 ft^3
1820.00	Operator takes actions to commence plant cooldown (1800 sec. after transient initiation)	---

TABLE 10.4.9A-9

Initial Conditions

Nominal initial conditions are assumed. Any differences between the assumed initial conditions and actual plant values are insignificant in terms of the anticipated analysis results. The initial conditions are as follows:

Parameter	Value
Core Power	3030 MWt
Reactor Coolant Pump Heat	14.2 MWt (4 pumps)
Moderator Temperature Coefficient	-0.91 pcm/°F
Doppler Coefficient Multiplier	DPC1 = -19.4 pcm/(% power) DPC2 = +0.068 pcm/(% power)^2
Primary Flow	187500 GPM
Core Inlet Temperature	Low nominal: 535°F Hi nominal: 551°F
Pressurizer Pressure	2250 psia
Pressurizer Level	63% NRS
Steam Generator Level	65% Span
Steam Generator Blowdown	120 gpm/SG
Main Feedwater Flow*	Low Tavg: 1831.3 lbm/s/SG High Tavg: 1849.9 lbm/s/SG
Main Feedwater Enthalpy	420.48 BTU/lbm

* Note that for initial conditions, the main feedwater flow is set equal to the steam flow.

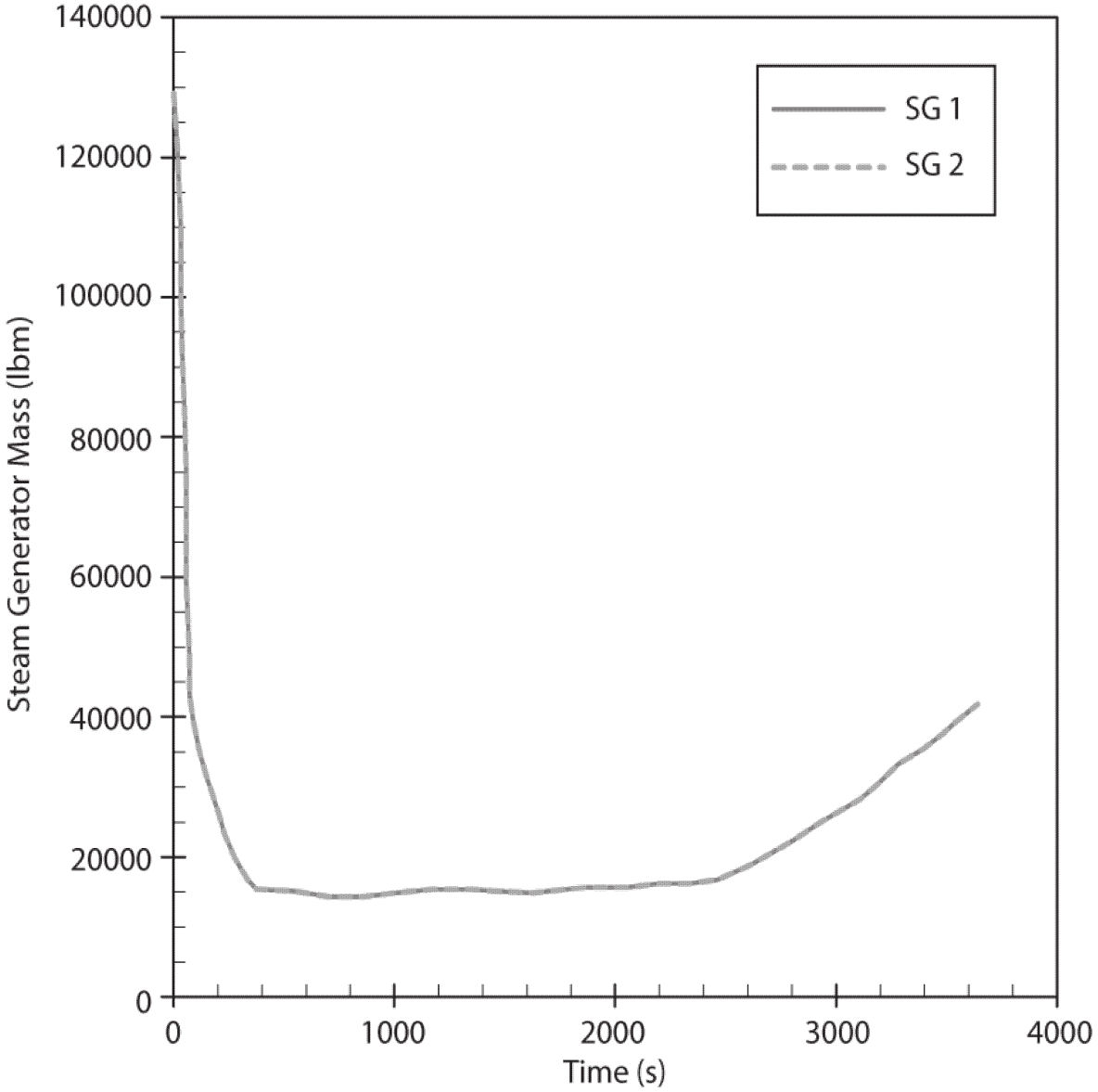

FLORIDA POWER & LIGHT COMPANY
ST. LUCIE PLANT UNIT 2

LOMF w/AC
Steam Generator Inventory
Versus Time
FIGURE 10.4.9A-1

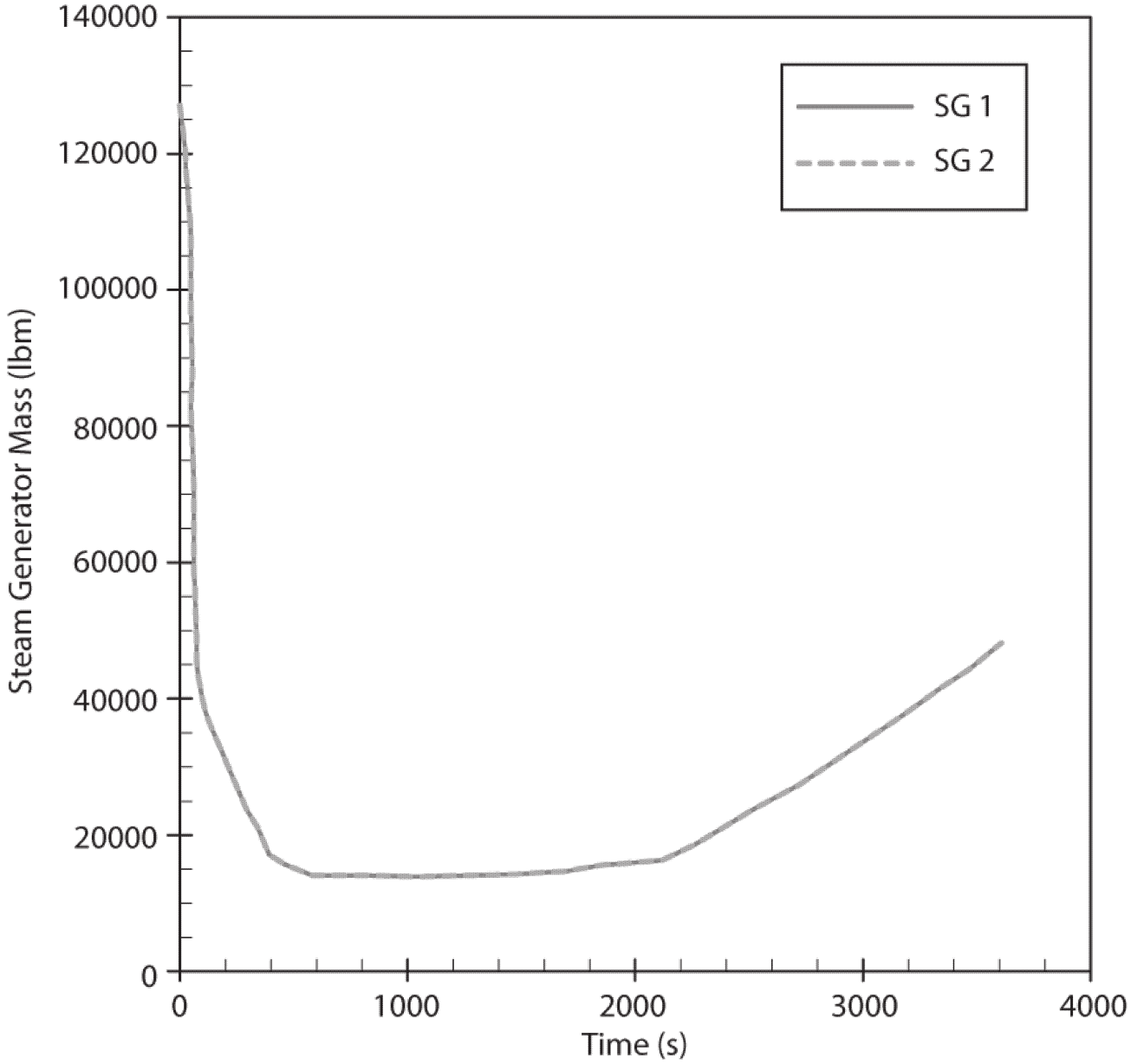

FLORIDA POWER & LIGHT COMPANY
ST. LUCIE PLANT UNIT 2

LOMF w/LOOP
Steam Generator Inventory
Versus Time
FIGURE 10.4.9A-2

Amendment No. 22B (02/16)

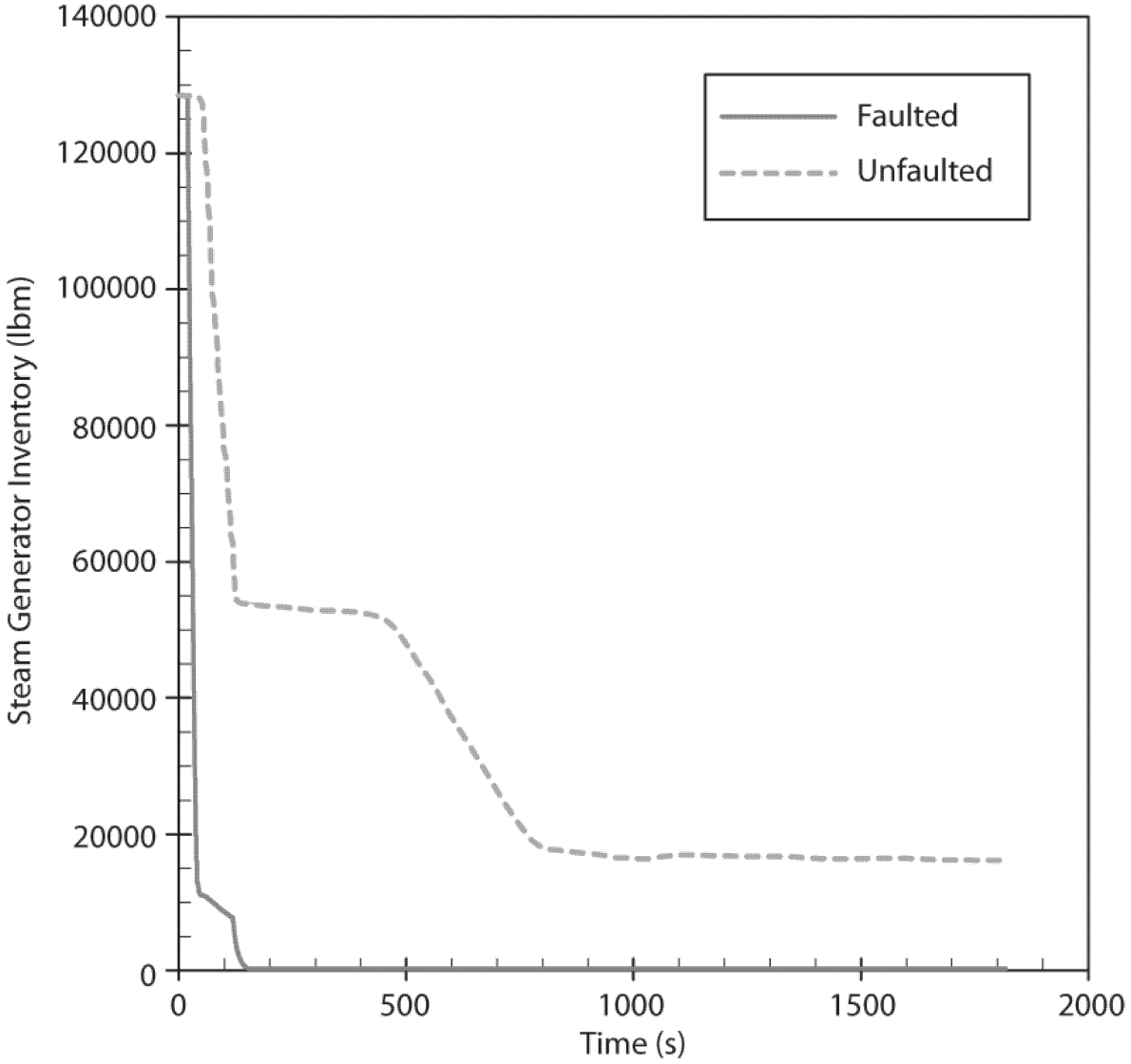

FLORIDA POWER & LIGHT COMPANY
ST. LUCIE PLANT UNIT 2

FLB w/AC
Steam Generator Inventory
Versus Time
FIGURE 10.4.9A-3

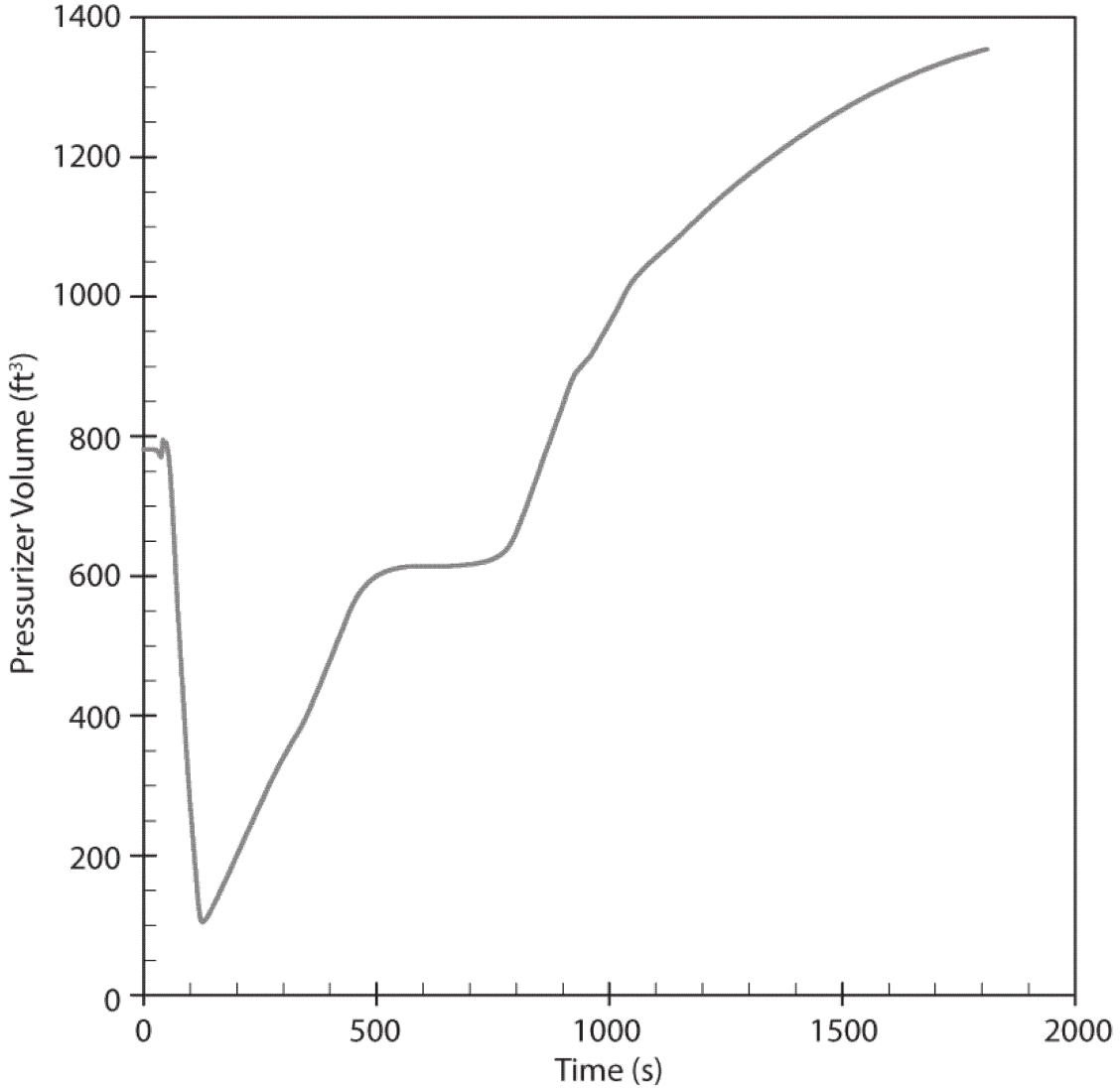

FLORIDA POWER & LIGHT COMPANY
ST. LUCIE PLANT UNIT 2

FLB w/AC
Pressurizer Level Percent
Versus Time
FIGURE 10.4.9A-4

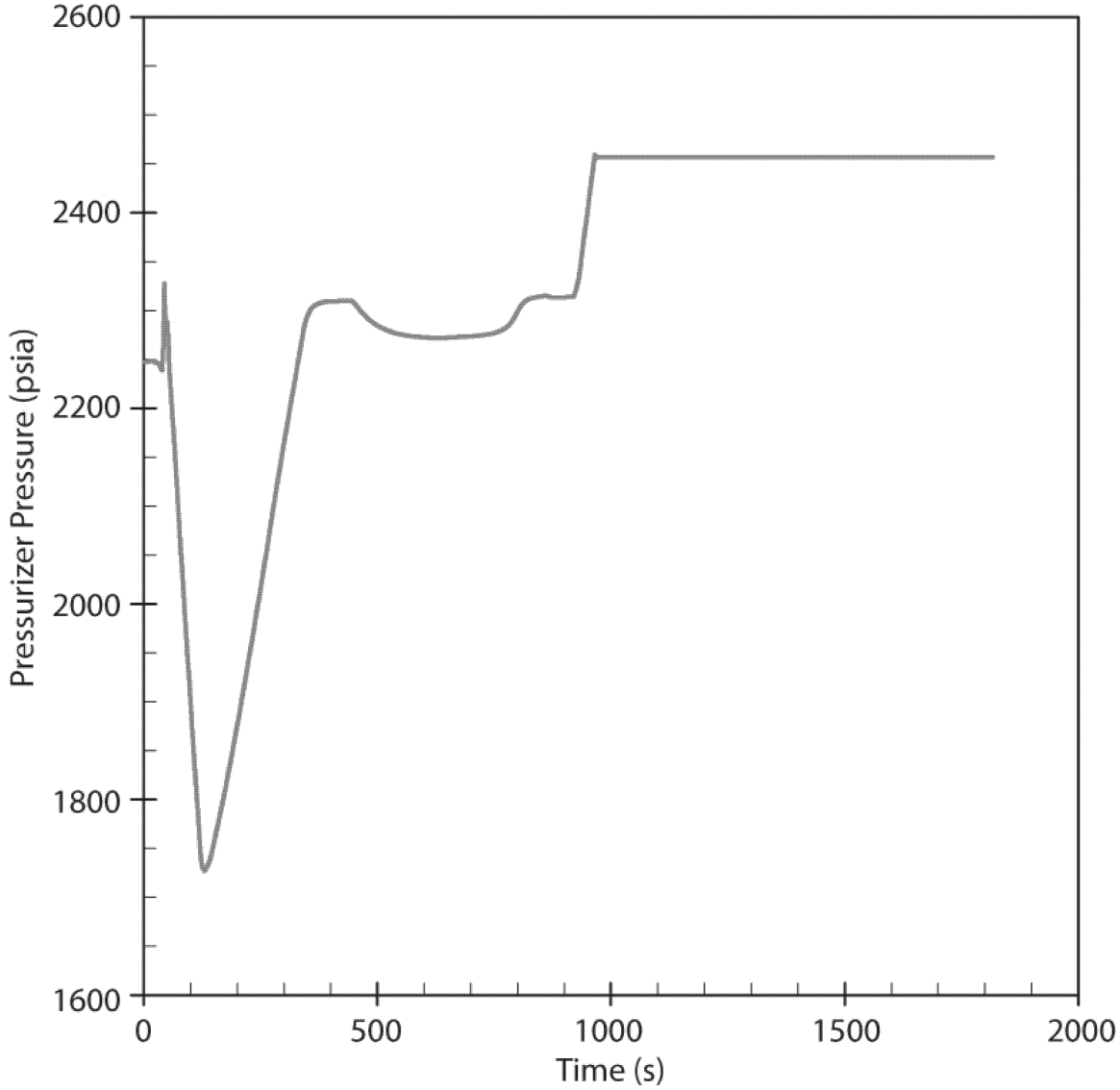

FLORIDA POWER & LIGHT COMPANY
ST. LUCIE PLANT UNIT 2

FLB W/AC
Pressurizer Pressure
Versus Time
FIGURE 10.4.9A-5

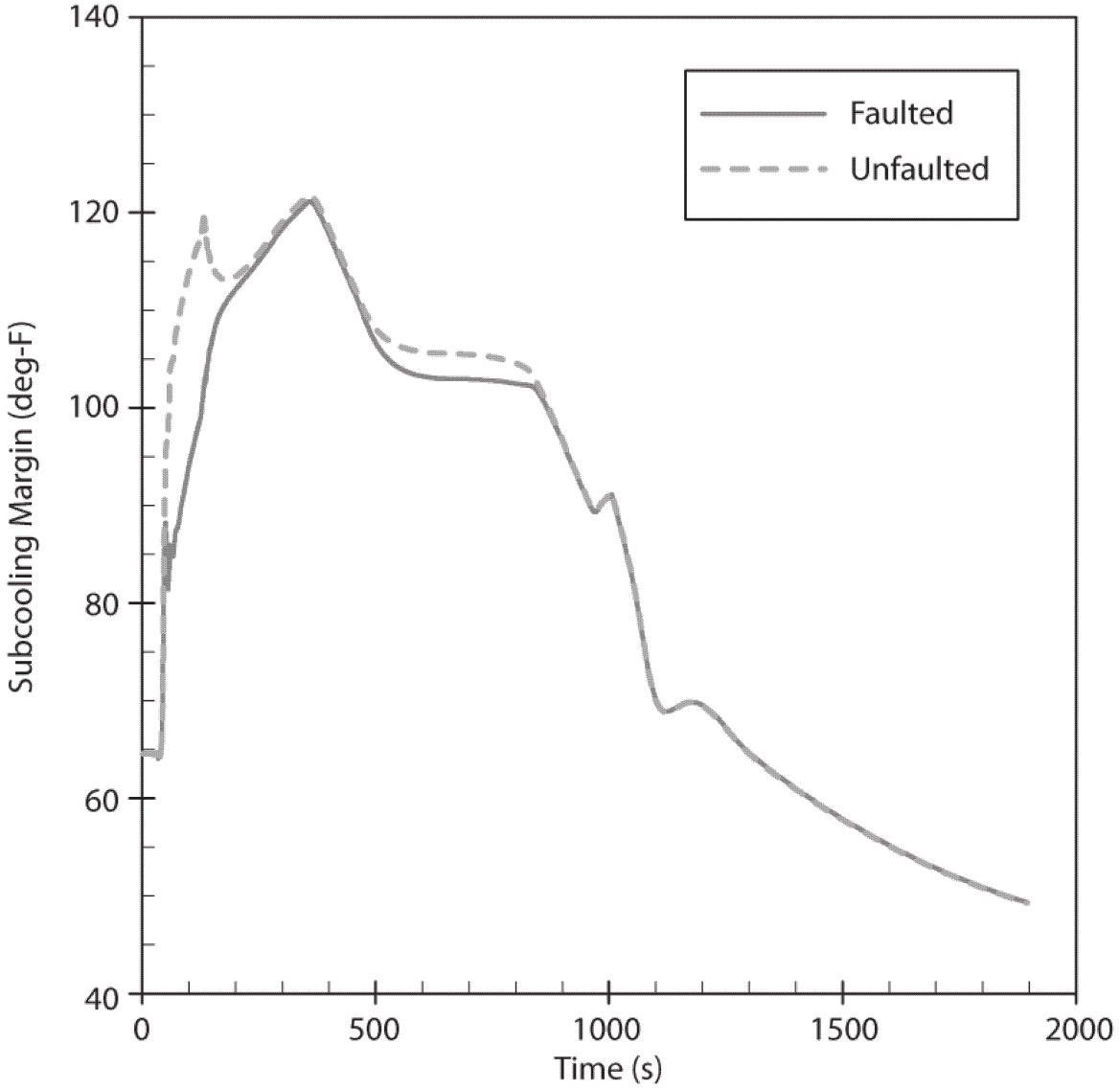

FLORIDA POWER & LIGHT COMPANY
ST. LUCIE PLANT UNIT 2

FLB w/AC
Core Exit Subcooling Margin
Versus Time
FIGURE 10.4.9A-6

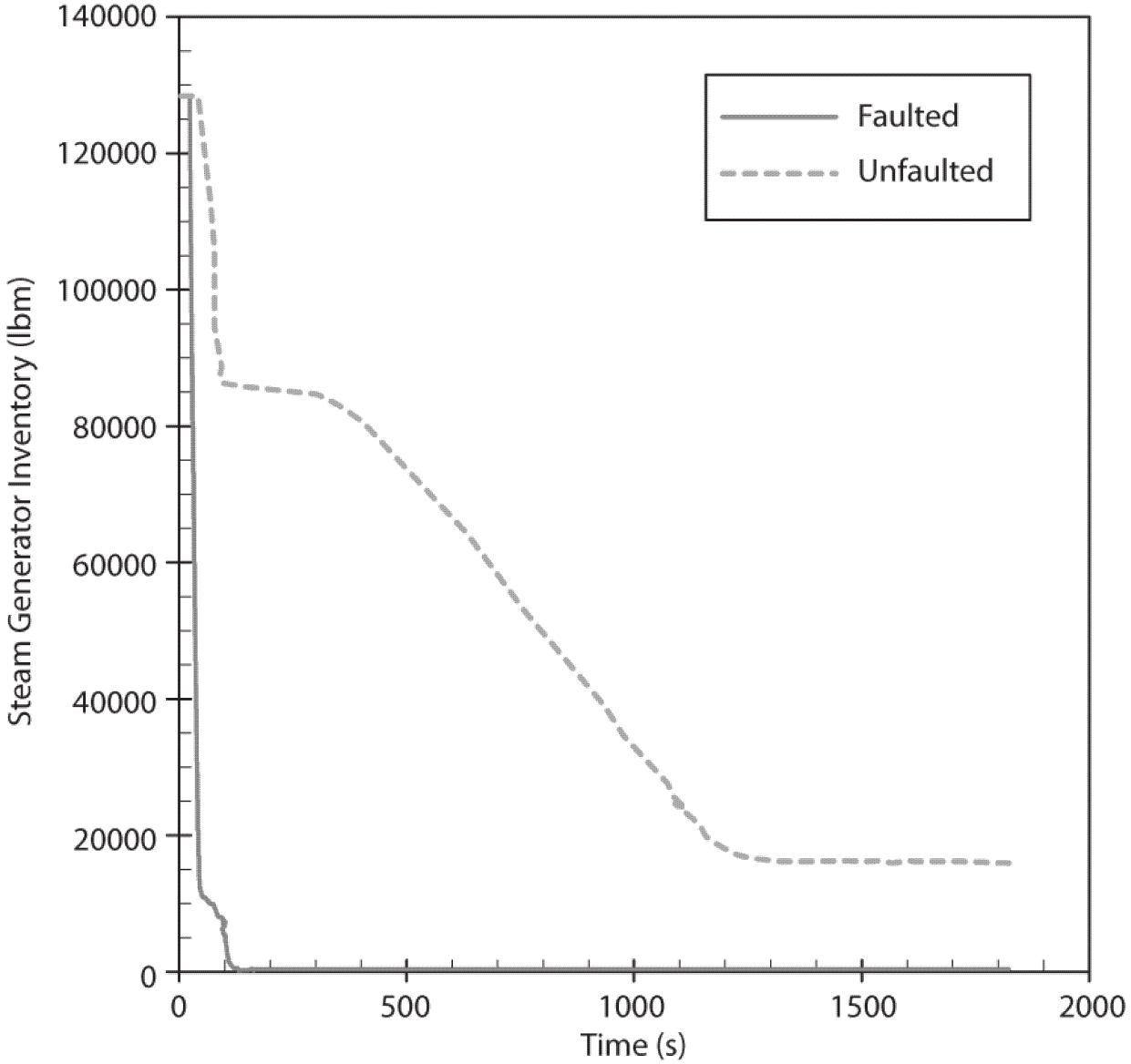

FLORIDA POWER & LIGHT COMPANY
ST. LUCIE PLANT UNIT 2

FLB w/LOOP
Steam Generator Inventory
Versus Time
FIGURE 10.4.9A-7

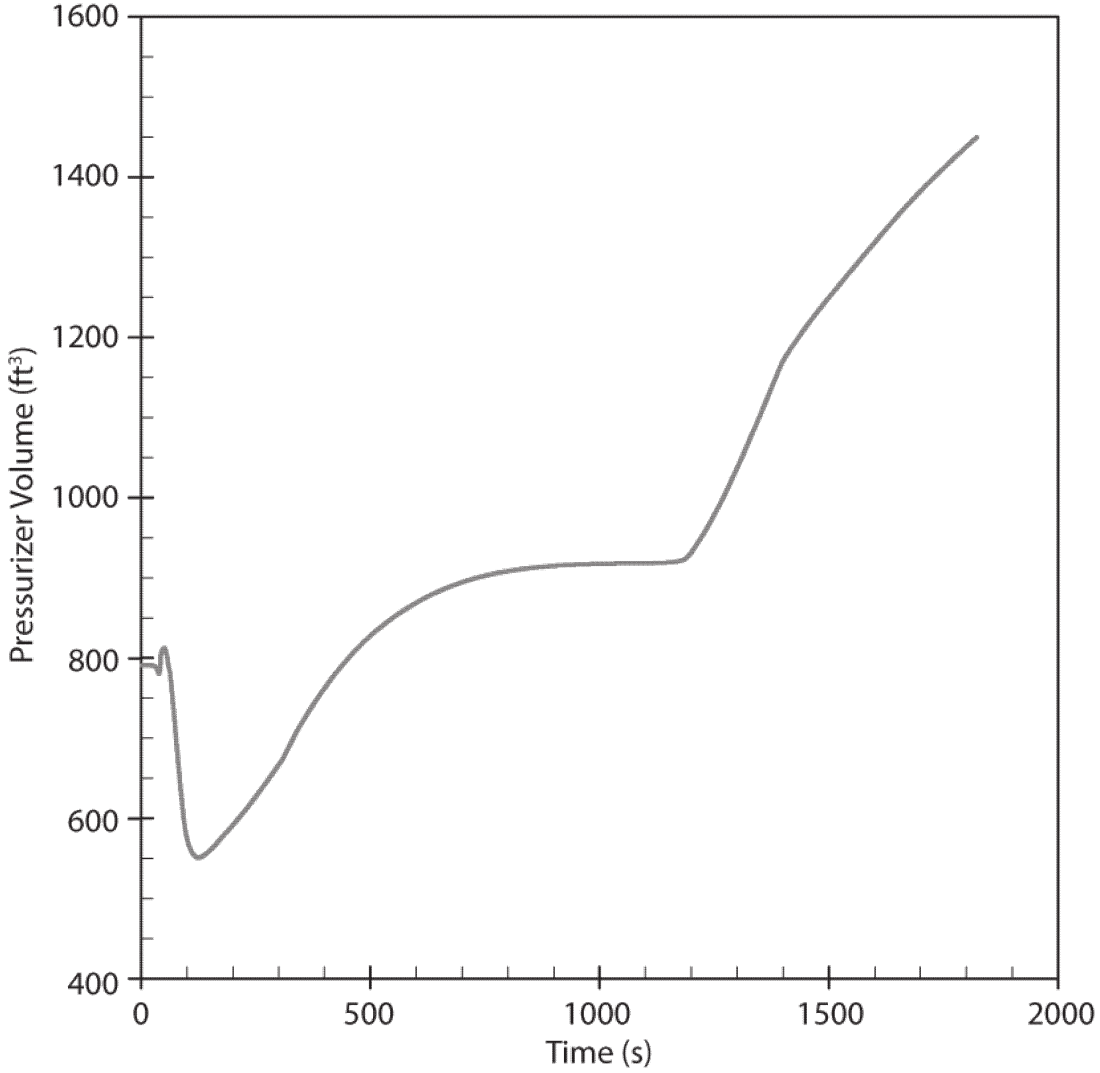

FLORIDA POWER & LIGHT COMPANY
ST. LUCIE PLANT UNIT 2

FLB w/LOOP
Pressurizer Level Percent
Versus Time
FIGURE 10.4.9A-8

Amendment No. 22B (02/16)

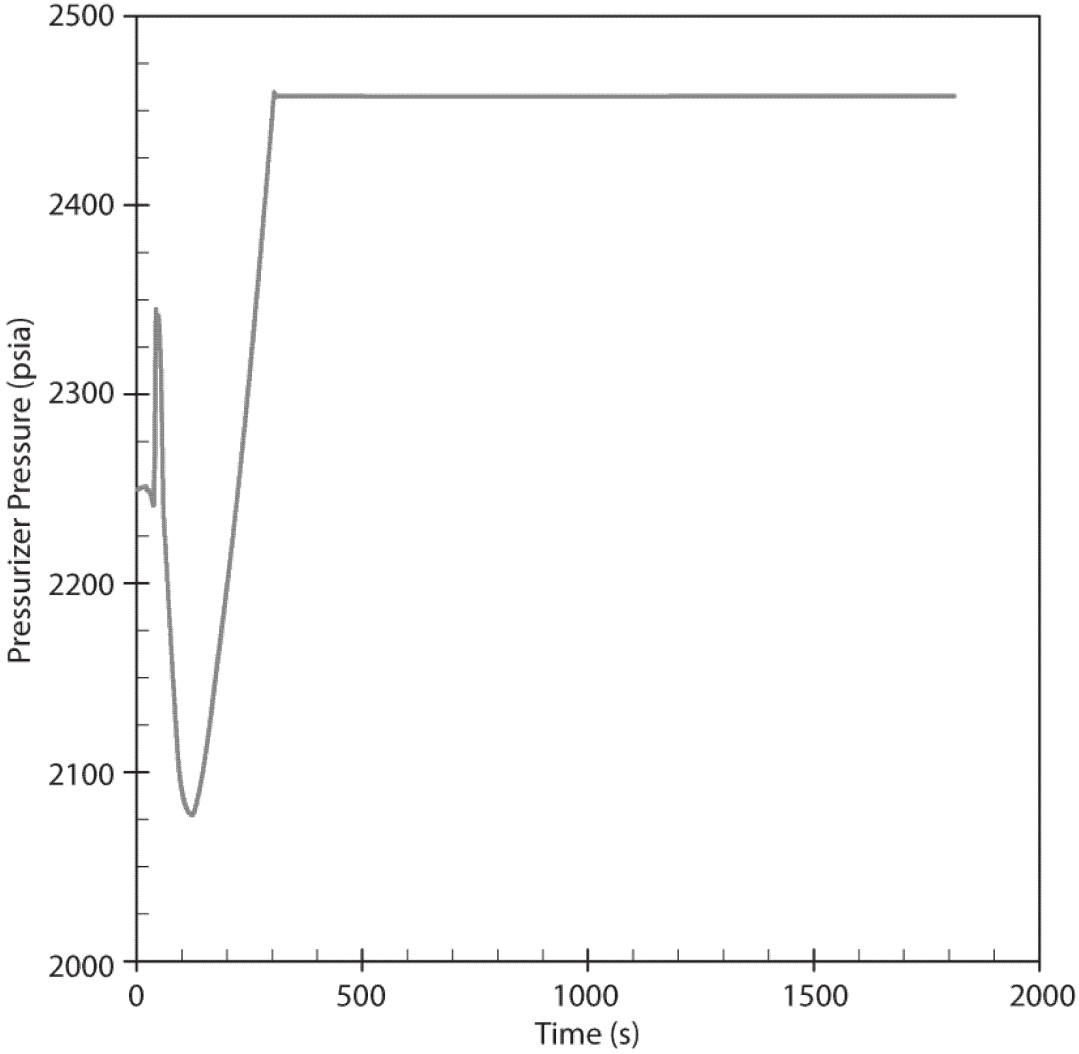

FLORIDA POWER & LIGHT COMPANY
ST. LUCIE PLANT UNIT 2

FLB W/LOOP
Pressurizer Pressure
Versus Time
FIGURE 10.4.9A-9

Amendment No. 22B (02/16)

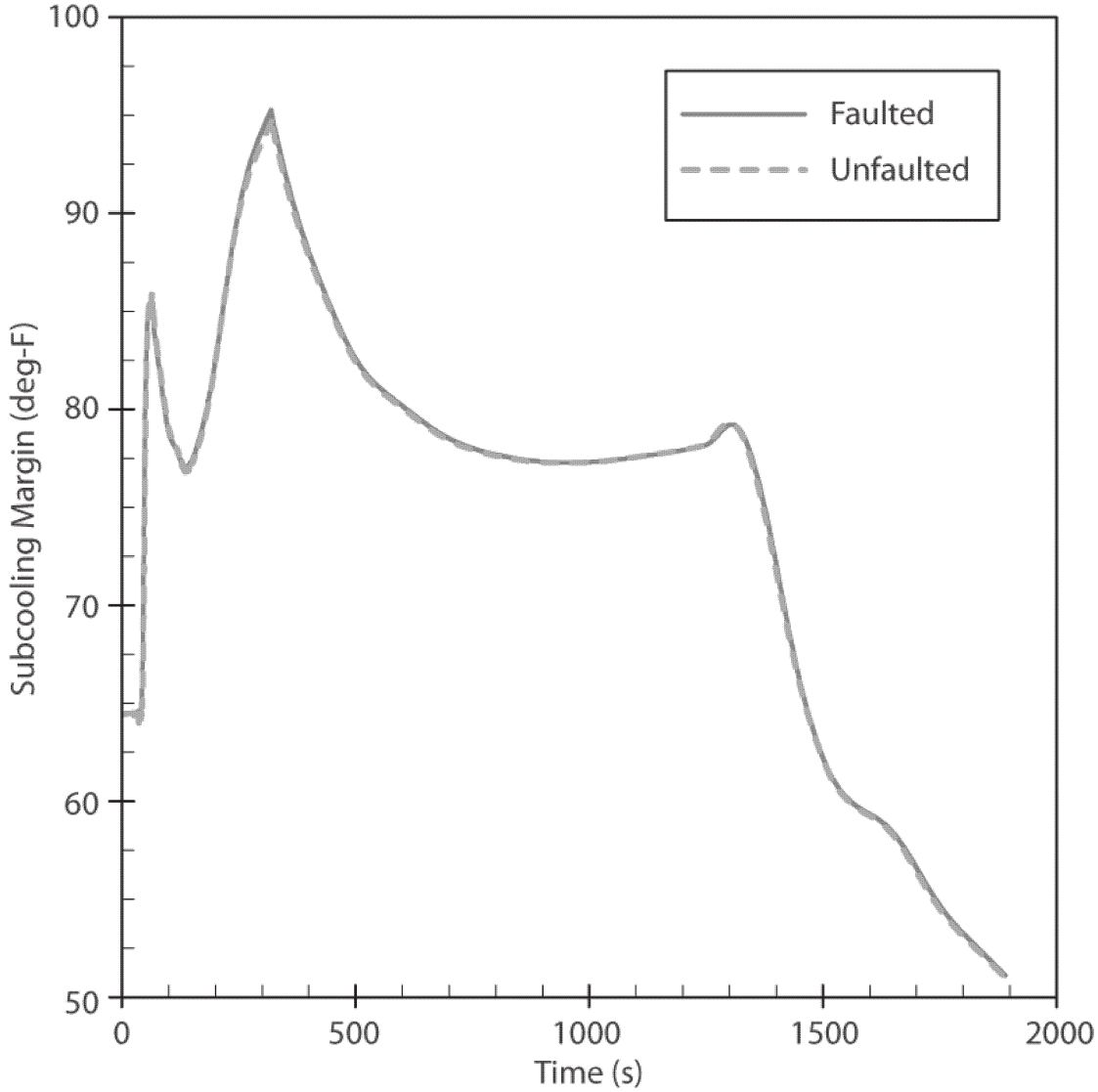

FLORIDA POWER & LIGHT COMPANY
ST. LUCIE PLANT UNIT 2

FLB W/LOOP
Core Exit Subcooling Margin
Versus Time
FIGURE 10.4.9A-10

Amendment No. 22B (02/16)

APPENDIX 10.4.9B

AUXILIARY FEEDWATER SYSTEM RELIABILITY ANALYSIS

The information contained in this section provides the original AFW system reliability analysis. This information summarizes the results of a reliability study of the St. Lucie Unit 2 AFW system required by the NRC in NRC Generic Letter 80-20, issued via a letter from D. Ross to all Westinghouse and CE operating license applicants dated 3/10/80. This information is maintained in the FSAR for Historical purposes.

APPENDIX 10.4.9B

TABLE OF CONTENTS

Section	Title	Page
10.4.9B.1	Introduction	10.4.9B-1
10.4.9B.2	System Definition	10.4.9B-1
10.4.9B.2.1	Top Event	10.4.9B-1
10.4.9B.2.2	System Boundaries	10.4.9B-2
10.4.9B.2.3	Basic Events Considered	10.4.9B-2
10.4.9B.3	System Model Construction	10.4.9B-4
10.4.9B.3.1	Failure Modes and Effects Analysis (Independent Failure Considerations)	10.4.9B-4
10.4.9B.3.1.1	Component	10.4.9B-5
10.4.9B.3.1.2	Component State	10.4.9B-5
10.4.9B.3.1.3	Effect	10.4.9B-5
10.4.9B.3.1.4	Inherent Compensation	10.4.9B-5
10.4.9B.3.2	Common Cause Failure Consideration	10.4.9B-5
10.4.9B.3.3	Fault Tree	10.4.9B-7
10.4.9B.4	System Model Qualitative Analysis	10.4.9B-8
10.4.9B.5	System Model Quantitative Analysis	10.4.9B-8
10.4.9B.5.1	Event Causes and Probabilities	10.4.9B-8
10.4.9B.5.2	System Failure Probability Analysis	10.4.9B-14
10.4.9B.6	Discussion of Results	10.4.9B-15
10.4.9B.7	Conclusions	10.4.9B-17

APPENDIX 10.4.9B

LIST OF TABLES

Table	Title	Page
10.4.9B-1	Component List Manual Valves	T10.4.9B-1
10.4.9B-2	AFS Failure Modes & Effect Analysis	T10.4.9B-8
10.4.9B-3a	Cut Sets - LOFW Automatic Auxiliary Feedwater System Study	T10.4.9B-16
10.4.9B-3b	Cut Sets - LOOP Automatic Auxiliary Feedwater System Study	T10.4.9B-24
10.4.9B-3c	Cut Sets - SBLO Automatic Auxiliary Feedwater System Study	T10.4.9B-35
10.4.9B-4a	Cut Sets - LOFW Manual Auxiliary Feedwater System Study	T10.4.9B-37
10.4.9B-4b	Cut Sets - LOOP Manual Auxiliary Feedwater System Study	T10.4.9B-44
10.4.9B-4c	Cut Sets - SBLO Manual Auxiliary Feedwater System Study	T10.4.9B-53
10.4.9B-5	Basic Event Failure Rate Data	T10.4.9B-54
10.4.9B-6	AFS Valves Subject to ASME Section XI Testing	T10.4.9B-56
10.4.9B-7a	Dominant Cut Sets - LOFW (Automatic)	T10.4.9B-57
10.4.9B-7b	Dominant Cut Sets - LOOP (Automatic)	T10.4.9B-58
10.4.9B-7c	Dominant Cut Sets - SB (Automatic)	T10.4.9B-59
10.4.9B-8a	Dominant Cut Sets - LOFW (Manual)	T10.4.9B-60
10.4.9B-8b	Dominant Cut Sets - LOOP (Manual)	T10.4.9B-61
10.4.9B-8c	Dominant Cut Sets - SB (Manual)	T10.4.9B-62

APPENDIX 10.4.9B

LIST OF FIGURES

Figure No.	Title
10.4.9B-1	AFS Schematic Diagram Manual Design
10.4.9B-2	AFS Schematic Diagram Automatic Design
10.4.9B-3	Fault Tree of LOFW - Manual
10.4.9B-4	Fault Tree of LOOP - Manual
10.4.9B-5	Fault Tree of SB - Manual
10.4.9B-6	Fault Tree of LOFW - Automatic
10.4.9B-7	Fault Tree of LOOP - Automatic
10.4.9B-8	Fault Tree of SB - Automatic

10.4.9B.1 Introduction

This report summarizes the results of a reliability study of the St Lucie 2 Auxiliary Feedwater System (AFS) required by the NRC in Reference 1. The primary purpose of this study is to assess the system availability to function on demand and identify any areas where changes in design, operating procedures and/or system testing/maintenance practice could result in significant availability improvements. The analysis and results are presented for both a manually actuated system and for the current AFS design which now incorporates automatic initiation features as described in FSAR Subsection 10.4.9. The (baseline) manually actuated system represents the design approved at the construction permit (CP) stage. This comparison provides a means of assessing the relative improvement in system reliability offered by this design change. The steps in this study were:

- SYSTEM DEFINITION: The objectives of the study and its scope and limitations are clearly defined.

- SYSTEM MODEL CONSTRUCTION: A Failure Modes and Effects Analysis for each component and Common Cause Analysis are performed and used to construct a system fault tree for each condition to be analyzed.

- SYSTEM MODEL QUALITATIVE ANALYSIS: The system model is examined to determine the combination of events (minimal cut sets) which can lead to system unavailability on demand.

- SYSTEM MODEL QUANTITATIVE ANALYSIS: Probabilities of occurrence are determined for the basic events in the fault tree, and are used to calculate the overall system availability and to weigh the relative importance of the events and event combinations as failure contributors.

- ANALYSIS OF RESULTS: The results of the qualitative analysis are reviewed to determine if any changes in design, modes of Automatic or Manual Initiation, operating procedures and/or system testing/ maintenance practice could result in significant availability improvements.

The details of the actual study are described herein.

10.4.9B.2 System Definition

10.4.9B.2.1 Top Event

The purpose of the analysis is to determine the availability of the AFS to perform it's design function on a demand produced by a Loss of Main Feedwater (LOFW), LOFW with Loss of Offsite Power (LOOP), and LOFW with Station Blackout (SB). Operation under main steam or feedwater line break or LOCA conditions were not considered. Each of the conditions under consideration requires the same minimum function of the AFS, i.e., to deliver a total of at least 320 gpm to the steam generator(s) to maintain the reactor in the hot standby condition, so the top event is the same for all three conditions.

It is known that the basic failure events to be considered have small probabilities. Thus, to minimize round off error in numerical calculations, the system model will be constructed in fault

tree as opposed to success tree fashion. The top event will then be failure to deliver at least 320 gpm AFS flow to the steam generator(s), or "320 gpm AFS flow to SG's."

The scope of the top event spans only the availability of the system to start on demand for the transients under consideration and does not include the reliability of the system to carry out this mission through the required duration several hours), consistent with the NRC request in Reference 1. However, it is believed that for the events analyzed, the system undependability is dominated by the unavailability to start on demand.

10.4.9B.2.2 System Boundaries

The AFS simplified flow diagram for the manual and automatic schemes are shown on Figure 10.4.9B-1 and Figure 10.4.9B-2 respectively. For this analysis, the system consists of the AFS flow path from the Condensate Storage Tank (CST) to the normal flow connections with the Main Feedwater System (MFWS), inclusive of interconnections with other systems. Support systems/ components considered in the anlaysis not shown on the figure are pump and valve control circuits, power supplies and AFAS logic. More detail on the types of failures considered is given in Subsection 10.4.9B.2.3.

10.4.9B.2.3 Basic Events Considered

The types of events considered in the FMEA and their possible causes are listed by component. It should be noted that in some cases events which obviously were not failure events were not fully developed in the FMEA. Also, not all the possible causes listed under each component type are applicable to each event for the component.

<u>MANUAL VALVE</u>

- Events:
  - Open (able to pass flow)
  - Closed (unable to pass flow)
- Possible Causes:
  - Plugging (flow path blocked)
  - In wrong position due to test or maintenance on another component at the time of demand
  - Normal or proper position

<u>CHECK VALVE</u>

- Events:
  - Open against forward current
  - Open against reverse current

  - Closed against forward current
  - Closed against reverse current
- Possible Causes:
  - Frozen in wrong position due to mechanical binding
  - In test or maintenance
  - Proper position

<u>POWER OPERATED VALVE</u>

- Events:
  - Remains OPEN on demand close signal
  - Remains CLOSED on demand open signal
  - CLOSED and receives no automatic signal
  - OPEN and receives no automatic signal
- Possible Causes:
  - Mechanical binding
  - Control circuit failure
  - Actuating signal failure
  - Motive force failure
  - Left in wrong position (if valves receives no confirmatory automatic signal) after test or maintenance action
  - In test or maintenance

<u>PUMP</u>

- Events:
  - Fails to deliver the required flow
- Possible Causes:
  - Mechanical binding
  - Control circuit failure
  - Actuating signal failure

- Motive force failure

ACTUATING LOGIC

- Events:
  - Signal not generated when required
- Possible Causes:
  - Unspecified electronics failure
  - In test or maintenance

POWER SUPPLY

- Events:
  - Does not supply AC power
  - Does not supply DC control power
- Possible Causes:
  - DG failure to start
  - DG in test or maintenance
  - Battery failure

The following events were not considered:

- Passive fluid boundary failures or valve disc stem separations.
- Spurious control circuit or actuation circuit logic commands.

Common cause failures considered as basic events are discussed in Subsection 10.4.9B.3.2. Common cause failures not considered were sabotage or those of a physical layout nature, such as non seismic systems falling on AFS components, high energy line breaks in other systems affecting the AFS, etc. The dynamic effects of high energy piping failures is discussed in FSAR Section 3.6.

10.4.9B.3 System Model Construction

10.4.9B.3.1 Failure Modes and Effects Analysis

A Failure Modes and Effects Analysis (FMEA) was developed as a first step in the system model construction to identify the effects that individual component actions have on subsystem and overall system operation. The FMEA describes the effect on the system of every component action regardless of whether or not the action contributed to system failure, and is a necessary complement to the fault tree for this reason. The structure and rationale behind the details of the FMEA is discussed below. The FMEA is given in Table 10.4.9B-2.

10.4.9B.3.1.1 Component

Each component selected in accordance with the criteria of Subsections 10.4.9B.2.2 and 10.4.9B.2.3 appears in the FMEA, with the exception of vent and drain valves. These were not included because the system is kept continually full of water by the CST/MFWS, so it is not considered credible that a vent or drain valve could be left open without being quickly noticed and corrected.

For simplicity in this study, each component considered was assigned to a two digit identification (ID) number. A list of all components considered, along with a description of the component, it's two digit ID number and actual ID number is given in Table 10.4.9B-1.

10.4.9B.3.1.2 Component State

Each component was considered in it's extreme states within the limitations of Subsection 10.4.9B.2.3 for the purpose of analyzing it's effects. For example, valves were considered in both the open and closed state. Actuation signals were analyzed only for failure to be generated when required, but not for spurious generation.

10.4.9B.3.1.3 Effect

The effect of the component being in the state under study on the functional block of which it is a part of is analyzed. The following general guidelines were used in analyzing the effect of the component states:

a. Valves: can impair system operation in the closed position by blocking flow where flow is desired, or in the open position by diverting flow or permitting flow where not desirable.

b. Pumps: can impair system operation by not pumping fluid as required and by providing a possible flow diversion path for parallel pumps.

c. Valve/Pump Control Circuits: can cause a pump not to start or valve to not change position when required, leading to the same system impairments discussed under Pump and Valves above.

d. Actuating Logic: can fail to issue a command to the pump or valve control circuits, leading to the same system impairments discussed above.

e. Power Supplies: can fail to provide motive force or control power to pumps or valves, leading to the same system impairments discussed above.

10.4.9B.3.1.4 Inherent Compensation

Any inherent provisions in the system which compensate for the degradation brought about by the component state under study is listed to assist in the fault tree construction.

10.4.9B.3.2 Common Cause Failure Consideration

Several events were assessed for their potential to induce common cause failures in the AFS, as discussed below.

a. LOSS OF INSTRUMENT AIR: A loss of instrument air would have no effect on the system as the valves in the AFWS are either DC motor operated, AC motor operated or solenoid operated. Thus, loss of instrument air has no adverse effect on system operation for the transients under consideration.

b. LOSS OF COMPONENT COOLING WATER (CCW): The AFS does not rely on Component Cooling Water. The AFS pumps, unlike the HPSI pumps, handle a relatively cool fluid which is itself sufficient for pump cooling, so no CCW is required.

c. LOSS OF AC POWER: The Motor Driven Pump (MDP) are powered from independent AC power sources. The Turbine Driven Pump (TDP) and all power operated valves associated with its flow and steam supply paths are independent of ac power. No TDP auxiliary functions, including lubrication, are dependent upon ac power. The AFS is located in the Main Steam trestle area which has been designed for natural circulation cooling, thereby, eliminating the need for an AC Cooling or Ventilation System.

d. POOR WATER QUALITY CONTROL: If very low quality water were used for extended periods in the AFS, it could conceivably cause corrosion/ particle deposition in the system, perhaps binding the moving parts of the pumps and valves. However, it is not credible that this would occur to any extent in the AFS for the following reasons:

   1. Only condensate or demineralized quality water is used in the AFS.

   2. The system is periodically treated with Ammonia/Hydrazine as necessary to control water chemistry.

   3. The system is periodically flow tested, which not only provides some system flushing, but assures that water quality has not affected the pumps.

   4. The valves are periodically stroke tested, which would detect any loss of function due to corrosion or particle deposition.

   TESTING: As discussed in Subsection 10.4.9B.5.1.1, system testing has no potential for causing common mode failures.

e. MAINTENANCE: As discussed in Subsection 10.4.9B.5.1.1, maintenance operation has no potential for causing a system common mode failure.

f. CONDENSATE STORAGE TANK: The CST is the only dedicated source of water to the AFS, so it is assessed for it's potential to cause AFS failure.

   1. Tank Vent Clogging: The CST is a carbon steel tank which is completely enclosed in a seismic Category I structure which has been designed to withstand the dynamic effects of tornado missiles. The CST utilizes an 8 inch water seal hydraulic vent system.

      There is no isolation valve on the line, and there are no known sources of debris which could clog such a vent system. Accidental crimping of the thick

walled pipe is not considered credible. As such, failure of the tank due to a restricted vent line is not considered credible.

2. Low Tank Level: The CST is also used as a water supply for the turbine cycle losses. The tank is equipped with redundant, safety grade level indicators and the operators are required to verify that tank level is within allowable limits every 12 hours. As such, it is not considered credible that tank level would be out of limits when a system demand occurred.

3. Pump Suction Flashing: The CST water remains at outside ambient temperatures, usually below 90F. There are no lines from hot, interfacing system which connect to the lines between the CST and pump suction. Thus, flashing of the pump suction source is not considered a credible common cause failure mechanism.

10.4.9B.3.3 Fault Tree

The fault tree was constructed from the FMEA (independent failure analysis) and the common cause failure analysis. The failures and combinations of failures that could defeat operation of the functional block were combined using conventional AND and OR gates. Then the blocks were arranged through logic which related them to the "top event" specified in Subsection 10.4.9B.2.1. The last step was particularly complex for the AFS due to it's extensive interconnection of redundant trains and the multiple ways in which it can successfully perform it's function.

To simplify the fault tree, only the (failure contributing) component states (or events) from the FMEA, and not all possible causes of the state were incorporated into the fault tree. For example, if a valve being closed (unable to pass fluid) was a contributor in the fault tree, "VALVE XX CLOSED" was included as the event in the fault tree rather than placing an OR gate in the tree with event inputs such as "VALVE XX CLOSED DUE TO MAINT", "VALVE XX CLOSED DUE TO ERROR", "VALVE XX PLUGGED WITH DEBRIS," etc. The latter would generate an unmanageable number of cut sets, and would produce a computer analysis output which focused on causes of concern as opposed to component of concern, which is more useful. A complete listing of the causes and probabilities of each event along with the rationale for their selection is given in Subsection 10.4.9B.5.1.

The fault tree was not constructed to take advantage of "fortuitous failures," e.g., where a failed or misoperated components negates the effect of another failure or misoperation. This does result in some physically unrealistic failure combinations, but constructing the fault tree to eliminate them would unduly complicate the fault tree without significant improvement in predicted system reliability.

Certain components can contribute to system failure by being in one state (e.g., valve open) under certain conditions and by being in the opposite state (valve closed) under different conditions. The fault tree could have been constructed to prevent the possible generation of cut sets including such mutually exclusive conditions by using NOT and AND gate combinations. However, this could not be done because the computer program used in the fault tree analysis will not accept a NOT gate, so such cases were handled by manually culling the cut sets of such combinations, as discussed in Subsection 10.4.9B.4.

Any failure which could affect more than one component, including common mode failures, were factored into the fault tree at the level at which the effect is seen, as opposed to being factored in a failure mode to each individual component. For example, the AFAS1 "A" logic failure, which could incapacitate both SG1 flow paths by not opening a valve on each path, was not entered as a failure to each valve individually, but rather was entered in an OR gate along with other events/event combinations which would incapacitate both SG1 flow paths. This approach was used because it permits use of the fault tree as a visual tool to readily identify the system level effects of certain failures. Treatment of operator error in the fault tree analysis is discussed in Subsection 10.4.9B.5.1.

A single fault tree including all components considered in the study was first generated. This fault tree represented the system under LOFW/LOOP, Manual Initiation and is shown on Figure 10.4.9B-4. For the other cases, the fault tree was reviewed to eliminate components which could not play a role due to differing initial condition assumptions.

The fault tree for different cases are as follows:

Figure	10.4.9B-3	Fault	Tree	(LOFW - Manual)
Figure	10.4.9B-4	Fault	Tree	(Loop - Manual)
Figure	10.4.9B-5	Fault	Tree	(SB - Manual)
Figure	10.4.9B-6	Fault	Tree	(LOFW - Auto)
Figure	10.4.9B-7	Fault	Tree	(Loop - Auto)
Figure	10.4.9B-8	Fault	Tree	(SB - Auto)

10.4.9B.4 System Model Qualitative Analysis

The purpose of the system qualitative analysis is to determine the "minimal cut sets," or minimum combinations of events which can lead to the top event. Since it was expected that most of the failure events were of relatively low probability (10^{-2} or less), it was decided that only the minimal cut sets containing three or less events would be of interest. Events containing more than three events would be of such low probability that it would not be meaningful to pursue them.

The PREP Code was chosen to perform the qualitative analysis because its combinational (trial and error) method of fault tree analysis is generally efficient when three event minimal cut sets are desired.

The results for Case 2 and Case 5 (LOOP) contained some cut sets with both emergency diesel generators failing. Since this condition is Case 3 and Case 6 (SB) by definition it was not appropriate to include them in Case 2 or Case 5. Therefore, these cut sets were manually culled from the (prep) output for those cases.

Each fault tree was individually analyzed to determine its three or less event minimal cut sets. The cut sets for each case are listed on Tables 10.4.9B-3a, 3b, 3c and 10.4.9B-4a, 4b, 4c.

10.4.9B.5 System Model Quantitative Analysis

10.4.9B.5.1 Event Causes and Probabilities

To determine overall system unavailability, a probability of occurrence had to be established for each of the basic events on the fault tree. This was accomplished by identifying the applicable causes (from Subsection 10.4.9B.2.3) of each event, assigning probabilities to each cause, and

summing the cause probabilities to obtain the event probability. Simple arithmetic summing of the cause probabilities was used because the "bracketing" correction terms would be insignificant because of the small numbers involved. The causes and probabilities of each event entering into the fault tree are given in Table 10.4.9B-6.

With the exception of testing and maintenance, selection of applicable causes for each event was straightforward using the data provided in reference 1. Applicability of test/maintenance causes to each event was determined on a case by case basis through a review of anticipated plant test and maintenance actions. This review is described in detail in Subsection 10.4.9B.5.1.1.

It should be noted that some of the causes of certain events are not expected to occur simultaneously with some causes of other events done appearing in the same cut sets. For example, if the "A" MDP was in maintenance during power operation, the Technical Specifications would not allow TDP maintenance without a plant shutdown. Performing the analysis to account for this would have unduly complicated the analysis without significantly improving the predicted overall system reliability, so this was conservatively ignored.

10.4.9B.5.1.1 Unavailability Due to Testing and Maintenance

System testing/maintenance can contribute to unavailability by two means:

- OUTAGE: Components/system are being tested/maintained in an inoperable state at the time operation is demanded.
- ERROR: Components realigned for the test/maintenance operation were not restored to their proper state following the operation by the test/maintenance crew.

A review of the proposed Technical Specifications, ASME Section XI, equipment vendor maintenance manuals, system operating procedures, etc, was conducted to identify testing/maintenance operations, their expected frequency and their potential for unavailability contribution from either outage or error. The sections herein on testing and maintenance summarize this review.

<u>SYSTEM TESTING</u>

A review of system tests revealed that there is no unavailability contribution due to testing, primarily because:

a. All tests involve putting the component in its operational state, so that it is ready if system response is demanded during the test.

b. No realignment of manual valves is required for any system tests.

A discussion of system tests and their potential for unavailability contributions is given below:

PUMPS: The motor driven and turbine driven pumps must be tested in accordance with ASME Section XI Subsection IWP, which requires a monthly test for speed, inlet pressure, Δp, flowrate, vibration and bearing temperature. The Technical Specification requirement to measure pump discharge pressure every 31 days is consistent with the Section XI tests.

To perform these tests, the pump is started manually from the control room and allowed to deliver flow back to the CST through the minimum flow recirculation line. This is carried out in normal system alignment, and none of the measurements to be taken affect pump operation. If a system demand occurred during the test, the motor driven pumps would continue to run if offsite power were available, or would be tripped and restarted by their associated diesel generator load sequencing relays if offsite power were unavailable. The turbine driven pump would continue to run in any case. As such, the monthly tests are not deemed to contribute to unavailability either by outage or error done.

For the alternate (automatic) system design, the Technical Specifications will also require that the pumps be verified to start on an automatic start signal every 18 months (i.e., during a refueling shutdown). This test will be performed for each automatic start channel and observing that the appropriate pumps start. No system valve realignment or temporary wiring arrangements are required. The test is terminated by clearing the back up manual start signal and stopping the pump. Since the test is performed during plant shutdown and with no system realignment, there is no potential for unavailability from the test either due to outage or error.

VALVES: The inservice testing program for SL2 has not been completed. However, the valves that are expected to be subject to such testing under ASME Section XI, Subsection IWP, are listed in Table 10.4.9B-6.

Subsection IWP requires that these valves be exercised to the position required to fulfill their function every three months. For power operated valves, this includes timing the stroke to assure that valve closure time is within acceptable limits. The plant Technical Specifications will envelope the ASME XI testing requirements.

For the power operated valves, the test involves opening the valve by turning the control switch to "open" and measuring the time the valve requires to open as observed by the valve position indicator. The valve is returned to its original position by turning the control switch to "close.” If a system demand occurs while the valve is being closed, the valve would reverse itself and go to the operational state. Thus, exercise testing of the power operated valves does not contribute to system unavailability.

Each check valve that can be exercised during normal plant operation will be exercised during the testing of the pumps and power operated valves. If a system demand were to occur either during or after testing, the check valve would be returned to its proper position by the fluid forces of system operation. AFS system check valves that cannot be exercised during normal plant operation will be full stroked exercised during cold shutdown. Thus, testing of the check valves does not contribute to unavailability either by outage or errors.

CONTROL: CIRCUITS The Section XI test for pumps and power operated valves is also a control circuit test. This is a monthly test for pumps and quarterly test for valves. As with the pump and valve tests, there is no contribution to system unavailability.

ACTUATING LOGIC: Details of the testing of the automatic start logic for the alternate design are given is FSAR Section 7.3. As demonstrated there, these tests do not affect generation of the automatic start on demand and thus do not contribute to AFS unavailability.

DIESEL GENERATORS: Details of the standby diesel generator testing are given in FSAR Section 8.3. As demonstrated there, tests do not affect the ability of the diesel generators to respond on demand, and thus do not contribute to AFS unavailability.

SYSTEM MAINTENANCE

Routine periodic maintenance may be performed on system pumps and power operated valves during plant operation. No maintenance on manual valves or check valves is expected during power operation. In addition, certain power operated valves cannot be repaired during plant operation, so maintenance on these components has no potential for causing unavailability. Details of how maintenance contributes to unavailability for each component is discussed below.

PUMP MAINTENANCE: NUREG 0635 provides a calculational method for estimating maintenance unavailability for active components. Based on this methodology, the following formula is applicable to the Auxiliary Feedwater System pumps:

$$Q_{MAINT} = \frac{(.22\ maint.\ act/mo.)\,(7\ hr./maint.\ act)}{(720\ hr/mo.)}$$

$$= 2.1 \times 10^{-3}$$

To check the validity of this estimate, a review was made of routine maintenance performed on the St. Lucie Unit 1 Auxiliary Feedwater System pumps. These pumps undergo semi-annual maintenance procedures during which the pumps are unavailable. A review of the maintenance records for the period November 1977 through July 1980 (approximately 2.3×10^4 hours) indicates that the motor driven pumps A and B were undergoing maintenance for 71 and 55 hours respectively and the turbine driven pump was under maintenance for 106 hours. Assuming half of this semi-annual maintenance took place during plant shutdown, this yields the following estimates for pump unavailability during power operation:

MDP A: $Q_{MAINT} = \frac{35.5\ hrs}{2.3\ x\ 10^4 hrs} = 1.5\ x\ 10^{-3}$

MDP B: $Q_{MAINT} = \frac{27.5\ hrs}{2.3\ x\ 10^4 hrs} = 1.2\ x\ 10^{-3}$

TDP C: $Q_{MAINT} = \frac{53\ hrs}{2.3\ x\ 10^4 hrs} = 2.3\ x\ 10^{-3}$

Since these valves are in reasonable agreement with the estimate provided by NUREG 0635, a value of 2×10^{-3} was used to estimate maintenance unavailability for all pumps.

VALVE: Certain AFS valves are not accessible for maintenance during plant operation

MAINTEN-ANCE

because they directly interface with pressurized systems. A fault in such valves might require a plant shutdown in accordance with the LCO's which, while undesirable from an operations standpoint, virtually precludes the chance of maintenance on these valves from contributing to unavailability. These valves are 67, 68, 69 and 70 (TDP steam supply valves). However, for conservatism it is assumed that maintenance can be performed on all MOV's and solenoid operated valves during plant operation.

No routine maintenance is anticipated for manual valves and check valves. For motor operated and solenoid operated valves, the calculational method described in NUREG 0635 was used to estimate maintenance unavailability as follows:

$$Q_{MAINT} = \frac{(.22\ maint.\ act/mo.)\,(7\ hr./maint.\ act)}{(720\ hr/mo.)}$$

$$=2.1 \times 10^{-3}$$

As indicated in Table 10.4.9B-5, this value was rounded to 2×10^{-3} and used for motor operated and solenoid operated valve maintenance unavailability.

DIESEL GENERATOR MAINTEN-ANCE:

For the loss of offsite power case, diesel generator unavailability was included as the dominant cause of loss of ac power to either of the motor driven pumps and associated ac power motor operated valves. From WASH 1400, a value of 3×10^{-2} was used to estimate probability of failure to start on demand. In addition, diesel generator maintenance unavailability was estimated using the NUREG 0635 calculational method as follows:

$$Q_{MAINT} = \frac{(.22\ maint.\ act/mo.)\ (21\ hrs/maint.\ act)}{(720\ hrs/mo.)}$$

$Q_{MAINT} = 6.4 \times 10^{-3}$

This value was rounded to 6×10^{-3} and combined with the probability of failure to start on demand (3×10^{-2}) to yield an estimate of 3.6×10^{-2} for total diesel generator unavailability on demand as indicated in Table 10.4.9B-5.

OTHER MAINTEN-ANCE:

a) Regular Water Treatment - Hydrazine for cleaning is intermittently injected into the Main Feedwater line through one inch lines via check valve 53, 54 and manual valve 23, 24 as necessary to maintain water quality. These two lines are isolated by two normally closed globe valves in series from the AFS. Diversion of AFW flow to this chemical injection lines is unlikely.

b) AFS Water Treatment - This operation injects hydrazine into the normally stagnant AFS as necessary to maintain water quality, and may be conducted during plant operation. The isolation valves in series which are 25 and 26, 27 and 28, 29 and 30, 31 and 32 can be opened for chemical injection. Should these isolation be left open erroneously, diversion of flow to the main AFW discharge is very limited as they are one inch in diameter and further stopped by the check valve 53, 54 in the feed lines.

c) Random operator error - There exists a possibility that a manual valve could be left out of position following a test or maintenance outage. The probability of this occurring is calculated using the formula provided in NUREG-0635, Table III-2, Item III.A.1(a), middle column with local walk around and double check procedures with X taken as 15, the number of manual valves in the major AFS flow path.

OPERATOR ERRORS

Four classes of operator errors were included as basic events in the base line (manual) system analysis. These are identified on the system fault tree and are defined as follows:

- OE1 - Failure to take any operator action to operate system on demand.
- OE2 - Omission of a step in the actuation sequence for the turbine driven pump and failure to take corrective action.
- OE3 - Failure to switch AB dc bus to B dc power source upon failure of A dc power source.
- OE4 - Failure to correctly utilize motor driven pump discharge cross tie to circumvent failures in a motor driven pump steam generator feed line.

These operator errors are listed in order of estimated increasing probability of failure. This judgment was arrived at based on a review of the availability of established procedures specifying the corrective action required and complexity of diagnosis and manual actions involved. The estimated probability for the basic event OE1 was 5×10^{-3} which is based on NUREG 0635 estimated failure data for the situation involving a non-dedicated operator with possible backup by another control room operator to actuate the auxiliary feed water system within 15 minutes. Since the action involved in OE1 is clearly specified in written procedures and is subject to periodic test as well as actual challenges, this value appears to be reasonable for failure to perform this basic function. Basic event OE2 involves the omitting of a step in the actuation sequence for the turbine driven pump given that the operator has initiated manual actuation. The manual start procedure for the motor driven pumps is much simpler than for the turbine driven pump and, given that OE1 has not occurred, it is assumed that failure to start the

motor driven pumps is negligible. The OE2 error is judged to be more likely than OE1 and has been assigned a value of 1×10^{-2}. Basic event OE3 involves error in failing to recognize the occurrence of a dc power source failure or errors in correctly implementing switchover procedures for transferring the AB dc power bus from one source to another. Since this involves additional complexity of diagnostic and manual actions than basic event OE2, it is assigned a higher probability of failure of 3×10^{-2}. Basic event OE4 involves even further need to diagnose system failures and implement manual actions that are not fully described by procedure. Accordingly, it is assigned a failure probability of 5×10^{-2} which is somewhat higher than the failure rate assigned to OE3.

The estimated failure probabilities for events OE1, OE2, and OE3 are applicable to the base line (manual system design), but do not contribute to the alternate (automatic) system design since they are obviated by automatic design features. Basic event OE4 applies to both the base line and alternate designs, but overall system unavailability on demand is insensitive to its assigned value. The values assigned to the operator error events are, therefore, of significance only in evaluating the degree of improvement offered by the automatic design over the manual design and will not affect the reliability estimate for the automatic design. Although the values assigned to the operator errors are based primarily on judgment, they are generally consistent with the human error estimates presented in NUREG/CR1278 considering the various modes of failure for each event. These include contributions from the use of improper procedures (3×10^{-3}), omission of a procedural step (1×10^{-3}), selection of a wrong control switch (1×10^{-3}), manipulation of a wrong motor operated valve switch from among a group of switches (3×10^{-3}) and failure to correctly recognize an annunciator function among a group of annunciators (1×10^{-2}).

For the automatic design, an additional operation error (OE5) was included to account for failure of backup manual actuation upon failure of the automatic actuation system. The NUREG 0635 estimate of 1×10^{-2} for failure of a non dedicated operator to actuate a manual system was used as the failure rate for basic event OE5. No credit was taken for backup by other control room personnel.

10.4.9B.5.2 System Failure Probability Analysis

The overall system failure probability was determined from the minimal cut sets and individual event probabilities using an option of the KITT 1 Code. In essence, the probability of each cut set is determined by multiplying the probability of each event in the cut set, and the system failure probability is determined by adding the probability of each cut set and corrections for simultaneous occurrence (i.e., bracketing) were made even though the numbers involved are quite small. The results are as follows:

Transient	Unavailability
Case 1 LOFW (Auto)	6.21×10^{-6}
Case 2 LOOP (Auto)	1.90×10^{-5}
Case 3 SB (Auto)	6.91×10^{-3}
Case 4 LOFW (Manual)	5.01×10^{-3}
Case 5 LOOP (Manual)	5.04×10^{-3}

Case 6 SB (Manual) 2.83×10^{-2}

10.4.9B.6 Discussion of Results

Case 1 LOFW - Automatic

The dominant cut sets for Case 1 and their relative contribution to system failure are given on Table 10.4.9B-7a. The dominant cut sets fall into four basic system failure modes:

a. Failure of the CST Supply Valve (2) and other branching line valves contribute to 44 percent of the system failure. Its combination with Turbine Supply Valve 71A and TDP (Component III) are especially significant as they each account for 14.5 percent and 21 percent respectively.

b. Failure of TDP Train and other branching line valves or motor driven pumps account for 26 percent of the total system unavailability.

c. Simultaneous failure of valve 71A and other valves lead to 13 percent of the total failure probability.

d. The failure of both AFAS-1 & 2 signal (component 105, 106) and the manual start of the system contribute approximately eight percent of the system unavailability.

The above failure modes approximately account for 83 percent of the total system failure probability. The remaining 317 cut sets are of lesser importance.

The absolute value of the SL-2 AFS unavailability for Case 1 (LOFW) of 6.21×10^{-6} is in the high reliability range of Reference 1.

Case 2 LOOP - Automatic

The dominant cut sets for Case 2 and their relative contribution to system failures are given in Table 10.4.9B-7b. These cut sets fall into three modes. No single major cut set of more than 10 percent contribution is found. Relatively important components are Valve 2, Valve 71A, TDP, AC buses and MDPs.

a. Closing of CST Supply Valve (2) and the combination with valve 71A or TDP (III) failure will contribute 4.75 and 6.8 percent respectively to the system unavailability.

b. Failure of valve 71A and other components account for 20 percent failure probability.

c. Failure of TDP and other components leads to 28.5 percent of the total.

The above failure modes account for 60 percent of the total system failure probability. The remaining 441 cut sets are of lesser importance which are less than or around 1 percent contribution. Owning to the loss of offsite power the major difference between Case 1 and Case 2 is the appearance of diesel generator AC power supply 101 and 102 in the cut set. Either one of them shows up in the 12 of the above 14 dominant sets.

The absolute value of the SL-2 AFS unavailability for Case 2 of 1.90 x 10^{-5} is in the medium reliability range of Reference 1.

Case 3 SB - Automatic

The dominant cut sets for Case 3 and their relative contribution to system failure are given on Table 10.4.9B-7c. As expected, there are a number of one event cut sets, since the motor driven pumps are deemed inoperable by the initial condition of Station Blackout for this case. The dominant contributions to system failure potential for this case is the turbine driven pump. Other major contributors are stream supply valve, valves in the discharge and suction side. Their relative contributions are 43, 30, 6 and one percent respectively.

The absolute value of AFS reliability for Case 3 of 6.91 x 10^{-3} is in the medium range of Reference 1.

Case 4 LOFW Manual

The dominant cut sets for Case 4 and their relative contribution to system failure are given on Table 10.4.9B-8a. The dominant cut sets fall into three basic system failure modes:

a. Failure of proper action by operator (OE 1) is the most significant contributor to the unavailability of the system. (99.72%)

b. Plugging of the CST supply valve (2) and other branch line valves contribute .2% of the total failure.

c. Failure of motor driven pump A or B and other components contribute .058% system unavailability.

The above failure modes approximately account for 99.98% of the total system failure probability with the OE 1 as the single most significant factor. The remaining 257 minimal cut sets are of much lesser importance when compared to OE 1.

The absolute value of the manual AFS unavailability for Case 4 is 5.01 x 10^{-3}.

Case 5 LOOP Manual

The dominant cut sets for Case 5 and their relative contributions to system failures are given in Table 10.4.9B-8b. The dominant cut sets fall into three modes:

a. Similar to Case 4, failure to take any operator action to operate system on demand (OE1) contributes to 99.1% of the failure probability.

b. Plugging of valve 2 and other components lead to .19% of the unavailability.

c. Failure of one of the ac power supply (101, 102) and one of the motor driven pumps (110, 112) account for .44%

The above failure modes account for 99.7% of the total system failure probability. The remaining 367 cut sets are of lesser importance. In any event, the contribution of various components is relatively insignificant when compared with the OE 1.

The absolute value of the manual AFS unavailability for case 5 is 5.04 x 10^{-3}.

Case 6 SB Manual

The dominant cut sets for Case 6 and their relative contribution of system failure are given on Table 10.4.9B-8c. As expected, most of the dominant cut sets are one event cut sets, since the motor driven pumps are inoperable by the initial condition of Station Blackout. The more significant contributors out of the 54 sets are OE 2, Valve 71, OE 1, Turbine driven pump 111 with relative probability of 35, 32, 17, 10% respectively. The above modes account for 95-53% of the system unavailability.

The absolute value of the manual AFS unavailability for case 6 is 2.83 x 6^{-2}.

The SL2 AFS use of automatic actuation and the manual operation are shown here in comparison. As can be seen from Tables 10.4.9B-8a, 8b, and 8c, operator error OE 1 which fails to react on demand contributes to 99% of the failure probability in Case 5 and 6 where as OE 1 and OE 2 contribute to 65% in Case 7. The reliability of SL 2 AFS in all three accidents have been improved in order of magnitude by automation.

10.4.9B.7 Conclusions

No acceptance criteria for this study were given, but as noted in the previous section the results were good when compared to the other plants studied in Reference 1. The main reasons that favorable results were achieved for the automatic system design are:

a. The active components and flow paths are redundant, so there are no single point vulnerabilities.

b. The system is automatically actuated, so no human action is required.

c. System design is such that all routine testing can be done with no incapacitating realignments or locking out of components.

d. There are few interconnections with the other systems, minimizing the potential for adverse interactions with other systems.

The analysis did not uncover any areas where minor changes could result in major reliability improvements. Reliability has always been a subjective consideration in the design and intended operating/maintenance practices for this system, and this quantitative reliability analysis confirmed that.

This study was useful in demonstrating that the SL-2 AFS is of high reliability, and that there were no major faults in the system design. However, care should be taken in applying the numerical results too literally. In particular, the unavailability reported for Case 1 & Case 2 begins to approach a judgemental lower bound on achievable unavailability for any system due to unidentified common cause failures. For this reason, there is probably little actual system reliability improvements to be gained even by major changes such as adding more pumps.

References:

1. Letter from D Ross to all Westinghouse and Combustion Engineering Operating License Applicants, dated March 10, 1980.

2. NUREG/CR-1278, "Handbook of Human Reliability Analysis with Emphasis on Nuclear Power Plant Applications," October 1980.

TABLE 10.4.9B-1

COMPONENT LIST
MANUAL VALVES

	VALVE NO.	DESCRIPTION
1	2I-V12506 (612)	Isolation valve on CST TDP suction line
2	2I-V12497 (612)	Isolation valve on CST MDP suction line A&B
3	2I-V12801 (612)	Isolation valve on line to Unit 1 water source for TDP
4	2I-V12802 (612)	Isolation valve on line to Unit 1 water source for MDP A&B
5	2I-V12498 (611)	Isolation valve on MDP-A Suction
6	2I-V12508 (612)	Isolation valve on TDP Suction
7	2I-V12502 (611)	Isolation valve on MDP-B Suction
8	2I-V9100 (326)	Isolation valve on MDP-A mini-recirculation
9	2I-V9103 (327)	Isolation valve on TDP mini-recirculation
10	2I-V9101 (326)	Isolation valve on MDP-B mini-recirculation
11	2I-V9104 (327)	Isolation valve on common mini-recirculation
12	2I-V9108 (310)	Isolation valve on MDP-A discharge
13	2I-V9140 (311)	Isolation valve on TDP discharge
14	2I-V9124 (310)	Isolation valve on MDP-B discharge

TABLE 10.4.9B-1 (Cont'd)

	VALVE NO.	DESCRIPTION
15	2I-V9120 (310A)	Isolation valve from MDP-A to SG-1
16	2I-V9152 (310A)	Isolation valve from TDP to SG-1
17	2I-V9158 (310A)	Isolation valve from TDP to SG-2
18	2I-V9136 (310A)	Isolation valve from MDP-B to SG-2
19	2I-V8622 (325)	Isolation valve on TDP steam supply line drain
20	2-V8623 (325)	Isolation valve on TDP steam supply line drain
21	2I-V8618 (324)	Isolation valve on TDP stop valve drain
22	2I-V8619 (324)	Isolation valve on TDP stop valve drain
23	2-V9310 (1125)	Isolation valve on chem inject to main feedwater A
24	2-V9290 (1125)	Isolation valve on chem inject to main feedwater B
25	2I-V9523 (1325)	Isolation valve on chem inject to MDP-A
26	2I-V9291 (1325)	Isolation valve on chem inject to MDP-A
27	2I-V9292 (1325)	Isolation valve on chem inject to TDB train A
28	2I-V9524 (1325)	Isolation valve on chem inject to TDB train A
29	2I-V9526 (1325)	Isolation valve on chem inject to TDB train B
30	2I-V9284 (1325)	Isolation valve on chem inject to TDB train B
31	2I-V9293 (1325)	Isolation valve on to chem inject MDP-B
32	2I-V9525 (1325)	Isolation valve on to chem inject MDP-B

TABLE 10-4.9B-1 (Cont'd)

POWER OPERATED VALVE

	VALVE			DESCRIPTION
15A*	I-SE-09-2	Solenoid	SA-AC	Isolation valve from MDP-A to SG-1
16B*	I-SE-09-4	Solenoid	SB-DC	Isolation valve from TDP to SG-1
17A*	I-SE-09-5	Solenoid	SA-DC	Isolation valve from TDP to SG-2
18B*	I-SE-09-3	Solenoid	SB-AC	Isolation valve from MDP-B to SG-2
61	I-MV-09-13	Motor	SA-AC	Isolation valve from MDP-A to cross-tie
62	I-MV-09-14	Motor	SB-AC	Isolation valve from MDP-B to cross-tie
63	I-MV-09-9	Motor	SA-AC	Throttle valve from MDP-A
64	I-MV-09-11	Motor	SAB-DC	Throttle valve from TDP to SG-1
64*	I-MV-09-11	Motor	SB-DC	Throttle valve from TDP to SG-1
65	I-MV-09-12	Motor	SAB-DC	Throttle valve from TDP to SG-2
65*	I-MV-09-12	Motor	SA-DC	Throttle valve from TDP to SG-2
66	I-MV-09-10	Motor	SB-AC	Throttle valve from MDP-B
67	I-MV-08-13	Motor	SB-DC	Isolation valve on steam supply to TDP from SG-1
67*	I-MV-08-13	Motor	SB-DC	Isolation valve on steam supply to TDP from SG-1

*in automatic initiation case

TABLE 10.4.9B-1 (Cont'd)

POWER OPERATED VALVE

	VALVE			DESCRIPTION
68	I-MV-08-12	Motor	SA-DC	Isolation valve on steam supply to TDP from SG-2
68	I-MV-08-12*	Motor	SA-DC	Isolation valve on steam supply to TDP from SG-2
69	I-SE-08-2	Solenoid	SA-DC	Warmup valve on steam supply to TDP from SG-1
70	I-SE-08-1	Solenoid	SB-DC	Warm-up valve on steam supply to TDP from SG-2
71A	I-MV-08-3	Motor	SAB-DC	Stop valve on steam supply to TDP

TABLE 10.4.9B-1 (Cont'd

CHECK VALVE

	VALVE NO	DESCRIPTION
41	2I-V9305 (346)	Mini-recirculation for MDP-A
42	2I-V9-9303 (347)	Mini-recirculation for TDP
43	2I-V9304 (346)	Mini-recirculation for MDP-B
44	2I-V9107 (350)	Pump discharge, MDP-A
45	2I-V9139 (351)	Pump discharge, TDP
46	2I-V9123 (350)	Pump discharge, MDP-B
47	2I-V9119 (350)	Discharge to SG-1 from MDP-A
48	2I-V9151 (350)	Discharge to SG-1 from TDP
49	2I-V9157 (350)	Discharge to SG-2 from TDP
50	2I-V9135 (350)	Discharge to SG-2 from MDP-B
51	2I-V8130 (350)	Steam Supply to TDP from SG-1
52	2I-V8163 (350)	Steam Supply to TDP from SG-2
53	2-V9350 (1145)	Chem inject to SG-1
54	2-V9287 (1145)	Chem inject to SG-2

TABLE 10.4.9B-1 (Cont'd)

PUMPS

	PUMP	CAPACITY
110:	"A" MOTOR DRIVEN* MDP-A	Full capacity - 320 gpm
111:	TURBINE DRIVEN TDP	Full capacity - 500 gpm
112:	"B" MOTOR DRIVEN* MDP-B	Full capacity - 320 gpm

ACTUATING LOGIC

	SIGNAL	PURPOSE
105:	AFAS 1	Indicates SG 1 is intact and is in need of AFW, Actuates the following:
	AFAS 1A	MDP-A
	AFAS 1A	V63
	AFAS 1B	V64
	AFAS 1B	V67
	AFAS 1C	V15A
	AFAS 1D	V16B
106:	AFAS 2	Indicates SG 2 is intact and is in need of AFW, Actuates the following:
	AFAS 2A	V65
	AFAS 2A	V68
	AFAS 2B	V66
	AFAS 2B	MDP-B
	AFAS 2C	V17A
	AFAS 2D	V18B
TDP Overspeed		Indicates failure of TDP speed control; closes TDP steam stop valve (Valve 71A)
TDP Speed Control		Regulates TDP governor valve (Valve as necessary to maintain pump speed)

TABLE 10-4.9B-1 (Cont'd)

	SYSTEM	POWER SUPPLY SERVICED COMPONENTS
101:	SA ac-4kV & 480 V	"A" MDP & Valves
102:	SB ac-4kV & 480 V	"B" MDP & Valves
103:	SA dc Battery	Valves
104:	SB dc Battery	Valves

TABLE 10.4.9B-2

AFS FAILURE MODES AND EFFECTS ANALYSIS

COMPONENT	COMPONENT STATE	EFFECT	INHERENT COMPENSATION
I. CONDENSATE SUPPLY (SUCTION) TO AFS PUMPS			
- Manual Valve 1	- Open	Normal	----
	- Closed	Loss one out of two suction lines to AFWPs	Another suction line available
- Manual Valve 2	- Open	Normal	----
	- Closed	Loss one out of two suction lines to AFWPs	Another suction line available
- Manual Valve 3	- Open	Potential of CST draining	N.C. valve downstream prevent drainage
	- Closed	Normal	----
- Manual Valve 4	- Open	Potential of CST draining	N.C. valve downstream prevent drainage
	- Closed	Normal	----
- Manual Valve 5	- Open	Normal	----
	- Closed	Loss of suction line to MDP-A	Lines to MDP-B & TDP available
- Manual Valve 6	- Open	Normal	----
	- Closed	Loss of suction line to TDP	Lines to MDP-A & B available
- Manual Valve 7	- Open	Normal	----
	- Closed	Loss of suction line to MDP-B	Lines to MDP-B & TDP available
II-A. MOTOR DRIVEN PUMP BLOCK (MDP-A)			
- Pump/Motor	- Fail to start	Fluid not delivered from pump	None, but MDP-B & TDP not affected
- SA ac Power (4kV & 480 V)	- Fail to energize motor	Fluid not delivered from pump	None, but MDP-B & TDP not affected
- AFAS 1a Logic	- Signal not generated	Loss of MDP "A"	None but TDP and "B" MDP not affected
- Manual Valve 8	- Open	Normal State	----
	- Closed	Loss of "A" MDP mini-flow recirculation; no immediate effect, but possible pump damage when SG isolation valves cycle closed	None, but TDP and "B" MDP not affected; "A" MDP initial response not affected

TABLE 10.4.9B-2(Cont'd)

COMPONENT	COMPONENT STATE	EFFECT	INHERENT COMPENSATION
- Check Valve 41	- Open (against forward current)	Proper State	----
	- Closed (against reverse current)	Proper State	
	- Open (against reverse current)	TDP and "B" MDP partial mini-flow recirculation through idle "A" MDP loop; No problem	----
	- Closed (against forward current)	Loss of "A" MDP mini-flow recirculation; no immediate effect, but possible pump damage when SG isolation valves cycle closed	None, but TDP and "B" not affected; "A" MDP initial start not affected
- Check Valve 44	- open (against forward current)	Proper State	----
	- Closed (against reverse current)	Proper State	----
	- Open (against reverse current)	Most "B" MDP flow diverted from SGs to recirc through idle "A" MDP loop; if cross tie valves are opened	TDP available to supply required flow
	- Closed (against forward current)	Fluid not delivered towards header	None, but TDP and "B" MDP not affected
Manual Valve 12	- Open	Normal State	----
	- Closed	Fluid not delivered towards header	None, but TDP and "B" MDP not affected
II.T.1 TURBINE DRIVEN PUMP STEAM SUPPLY			
- Motor Valve 67	- Open	Proper Operation	----
	- Closed	Loss of SG1 steam supply to TDP	SG2 steam supply not affected
- Check Valve 51	- Open (against forward current)	Proper Operation	----
	- Closed (against forward current)	Loss of SG1 steam supply to TDP	SG2 steam supply not affected

TABLE 10.4.9B-2(Cont'd)

COMPONENT	COMPONENT STATE	EFFECT	INHERENT COMPENSATION
- Motor Valve 68	- Open	Proper Operation	----
	- Closed	Loss of SG2 steam supply to TDP	SG1 steam supply not affected
- Check Valve 52	- open (against forward current)	Proper State	
	- Closed	Loss of SG2 steam supply to TDP	SG1 steam supply available
- Motor Op. Valve 71A	- Open	Normal State	----
	- Closed	Loss of all steam supply to TDP	None, but "A" and "B" MDPs not affected
AFAS-1b Logic	- Failure to be generated	Loss of automatic open signals to Valve 67	MDP "A" and MDP "B" and TDP available
AFAS-2a Logic	- Failure to be generated	Loss of automatic open signals to Valve 68	MDP "A" and MDP "B" and TDP available
Valve 19, 20, 21, 22	These valves are on drain lines serving the TDP steam supply line, and as such, must be evaluated for their potential to divert steam from the TDP. Because of their small size (1") they are not considered to be capable of diverting any significant quantity of steam.		
II.T.2 TURBINE DRIVEN PUMP BLOCK			
- Pump/Turbine	- Fails to start	Fluid not delivered towards header	None, but "A" and "B" MDPs not affected
- Manual Valve 9	- Open	Normal State	
	- Closed	Loss of TDP mini-flow recirculation; no immediate effect, but possible pump damage when SG isolation valves cycle closed	None, but "A" and "B" MDPs not affected; TDP initial start not affected
- Check Valve 42	- Open (against forward current)	Proper State	----
	- Closed (against reverse current)	Proper State	
	- Open (against reverse current)	"A" and "B" MDP partial mini-flow recirculation through idle TDP loop; No problem	----
	- Closed (against forward current)	Loss of TDP mini-flow recirculation; no immediate effect, but possible pump damage when SG isolation valves cycle closed	None, but "A" and "B" MDPs not affected; TDP initial start not affected

TABLE 10.4.9B-2(Cont'd)

COMPONENT	COMPONENT STATE	EFFECT	INHERENT COMPENSATION
- Check Valve 45	- Open (against forward current)	Proper Operation	----
	- Closed (against reverse current)	Proper Operation	----
	- Closed (against forward current)	Fluid not delivered towards header	None, but "A" and "B" MDPs not affected
	- Open (against reverse current)	Fluid not delivered towards header	MDP "A" and "B" not affected
- Manual Valve 13	- Open	Normal State	----
	- Closed	Pump doesn't deliver fluid towards header	None, but "A" and "B" MDPs affected
II-B MOTOR DRIVEN PUMP BLOCK (MDP-8)			
- Pump/Motor	- Fail to Start	Fluid not delivered from pump	None, but MDP-B TDP not affected
- SA ac Power (4.16kV & 480 V)	- Fail to energize motor	Fluid not delivered from pump	None, but MDP-B TDP not affected
- AFAS 2b	- Signal not generated	Loss of MDP 2B	None, but TDP and "A" MDP not affected
- Manual Valve 10	- Open	Normal State	----
	- Closed	Loss of "B" MDP mini-flow recirculation; no immediate effect, but possible pump damage when SG isolation valves cycle closed	None, but TDP and "A" MDP not affected; "B" MDP initial response not affected
- Check Valve 43	- Open (against forward current)	Proper State	----
	- Closed (against reverse current)	Proper State	----
	- Open (against reverse current)	TDP and "A" partial mini-flow recirculation through idle "B" MDP loop; No problem	----
	- Closed (against forward current)	Loss of "B" MDP mini-flow Recirculation; no immediate effect, but possible pump damage when SG isolation valves cycle closed	None, but TDP and "A" MDP not affected; "A" MDP initial start not affected

TABLE 10.4.9B-2(Cont'd)

COMPONENT	COMPONENT STATE	EFFECT	INHERENT COMPENSATION
- Check Valve 46	- Open (against forward current)	Proper State	----
	- Closed (against reverse current)	Proper State	----
	- Open (against reverse current)	Most "A" MDP flow diverted from SGs to recirc through idle "B" MDP loop, if crosstie is in use	TDP is available to supply required flow
	- Closed (against reverse current)	Fluid not delivered towards header	None, but "A" MDP and TDP not affected
- Manual Valve 14	- Open	Normal State	----
	- Closed	Fluid not delivered towards header	None, but "A" MDP and TDP not affected
- Manual Valve 11	- Open	Normal	----
	- Closed	Loss of mini-flow for all three pumps; no immediate effect, but possible pump damage when isolation valves closed	None
III.1 STEAM GENERATOR-1 FLOW PATH			
- Manual Valve 15	- Open	Normal State	----
	- Close	Fluid not delivered towards towards header	None, but MDP-B and TDP not affected
- Solenoid Valve 15A	- Open on signal,	Proper State	----
	- fail to open	No flow to SG-1 via MDP-A	None, flow available to SG-1 from TDP via redundant line
- Motor Valve 63	- Open on signal	Proper State	----
	- fail to open	No flow to SG-1 via MDP-A	None, flow available from TDP via redundant line
- Check Valve 47	- Open (against forward current)	Proper State	----
	- Closed (against reverse current)	Proper State	----
	- open (against reverse current)	Flow from MDP-A to SG-1 diverted	Check valve 44 closes to prevent back flow
	- Closed (against forward current)	No flow to SG-1 By MDP-A	None, flow available from TDP via redundant line

TABLE 10.4.9B-2(Cont'd)

COMPONENT	COMPONENT STATE	EFFECT	INHERENT COMPENSATION
- Manual Valve 23, 25, 26, 27, 28 - Check Valve 53	Normally closed valve 25, 2b, 27, 28 & check valve 53 prevent diversion of flow from MDP-A & TDP, Valve 23 (N.O.) has slight chance to divert flow		
- Motor Valve 61	- Open on signal - Fails to close on signal - Fails to open on signal	Proper State May divert flow Cannot divert flow from MDP-A to SG-2	---- Valve 62 in series N.C. None, MDP-B & TDP available
- Manual Valve 16	- Open - Close	Normal State Flow not delivered towards header	---- None, but MDP-B and TDP to SG-2 not affected
- Solenoid Valve 16B	- Open on signal - Fails to open	Proper State No flow to SG-1 via TDP	---- None, flow available from MDP-A via redundant line
- Motor Valve 64	- Open on signal	Proper State	----
	- Fails to open	No flow to SG-1 via TDP	None, flow available from MDP-A via redundant line
- Check valve 48	- Open (against forward current)	Proper State	----
	- Closed (against reverse current)	Proper State	----
	- Open (against reverse current)	MDP flow to SG-1 diverted	Check valve 45 close to prevent back flow
	- Closed (against forward current)	No flow to SG-1 by TDP	none, flow available from MDP-A via redundant line
AFAS 1C	Signal not generated	Loss of automatic open signal to V15A	MDP "B" and TDP not affected
AFAS 1B	Signal not generated	Loss of automatic signal to V 16B	MDP "A" and MDP "B" not affected
AFAS 1A	Signal not generated	Loss of automatic signal to V 63	MDP "B" and TDP not affected
AFAS 1B	Signal not generated	Loss of automatic signal to V 64	MDP "A" and MDP "B" not affected
III.2 STEAM GENERATION-1 FLOW PATH			
- Solenoid Valve 18B	- Open on signal - fails to open	Proper State No flow to SG-1 via MDP-B	---- None, flow available from TDP via another line

TABLE 10.4.9B-2(Cont'd)

COMPONENT	COMPONENT STATE	EFFECT	INHERENT COMPENSATION
- Motor Valve 66	- Open on signal	Proper State	----
	- fails to open	No flow to SG-2 via MDP-B	None, flow available from TDP via redundant line
- Check Valve 50	- Open (against forward current)	Proper State	----
	- Closed (against reverse current)	Proper State	----
	- Open (against reverse current)	TDP flow diverted from SG-2	Check valve 46 closed to prevent back flow
	- Closed (against forward current)	No flow to SG-2 by MDP-B	None, flow available from TDP via redundant line
- Manual Valve 24, 29, 30, 31, 32	Normally closed valve 29, 30, 31, 32 & check valve 54 present diversion of flow from MDP-A & TDP, Valve 24 (N.O.) has slight chance to divert flow		
- Check Valve 54			
- Motor Valve 62	- open on signal	Proper State (N.C.)	----
	- Fails to close on signal	May divert flow	Valve 61 in series N.C.
	- Fails to open on signal	Cannot divert flow from MDP-1 to SG-2	None, MDP-2 & TDP available
- Solenoid Valve 17A	- Open on signal	Proper State	----
	- fails to open	No flow to SG-2 via TDP	None, flow available from MDP-B via redundant line
- Manual Valve 17	- Open	Normal State	----
	- Close	Flow not delivered to header	None, but MDP "A" and "B" and TDP available
- Manual Valve 18	- Open	Normal State	----
	- Close	Flow not delivered to header	None, but MDP "A" and TDP available
- Motor Valve 65	- Open on signal	Proper State	----
	- fails to open	No flow to SG-2 via TDP	None, flow available from MDP-B via redundant line
- Check Valve 49	- Open (against forward current)	Proper State	----
	- Closed (against reverse current)	Proper State	----
	- Open (against reverse current)	Most MDP B flow diverted from SG-2	Check valve 45 closes to prevent back flow
	- Closed (against forward current)	No flow to SG-2 by TDP	None, flow available from MDP-B via redundant line

TABLE 10.4.9B-2(Cont'd)

COMPONENT	COMPONENT STATE	EFFECT	INHERENT COMPENSATION
AFAS 2a	Signal not generated	Loss of automatic open signal to V 65	None, but MDP "A" and MDP "B" not affected
AFAS 2b	Signal not generated	Loss of automatic open signal to V 66	None, but MDP "A" and TDP not affected
AFAS 2c	Signal not generated	Loss of automatic open signal to V 17A	None, but MDP "A" and MDP "B" not affected
AFAS 2d	Signal not generated	Loss of automatic open signal to V 18B	None, but MDP "A" and TDP not affected

IV. OVERALL SYSTEM FUNCTION

In LOFW and LOOP system minimum function is fulfilled when a total of 320 gpm is delivered to the steam generator(s) upon ASAS. This can be accomplished if any one of the pumps is able to deliver fluid to any one steam generator. Thus, using DeMorgans theorem, system function is not fulfilled if all of the pumps are unable to deliver fluid to both steam generators, ie, "A" MDP can't deliver to SG1 AND "A" can't deliver to SG2 AND "B" MDP can't deliver to SG1 AND "B" MDP can't deliver to SG2 AND TDP can't deliver to SG1 AND TDP can't deliver to SG2.

These failure conditions effectively relate failures of the system blocks to overall system function.

TABLE 10.4.9B-3a

CUT SETS - LOFW
AUTOMATIC AUXILIARY FEEDWATER
SYSTEM INITIATION

Cut Set	Component		
1	F103AD	F104BD	
2	V2CL	V71A	
3	V6CL	V2CL	
4	V1CL	V2CL	
5	F111T	V2CL	
6	V13CL	V2CL	
7	V45F	V2CL	
8	F105	F106	OE5
9	F104BD	F105	OE5
10	F103AD	F106	OE5
11	F112MB	V67F	F103AD
12	F112MB	V51F	F103AD
13	V71A	V15A	V66F
14	V71A	V15A	V18B
15	V71A	V15A	V18
16	V71A	V15	V66F
17	V71A	V15	V18B
18	V71A	V15	V18
19	V71A	V63F	V66F
20	V71A	V63F	V18B
21	V71A	V63F	V18
22	V71A	F112MB	F103AD
23	F110MA	V68F	F104BD
24	F110MA	V52F	F104BD
25	F110MA	V71A	F104BD
26	F110MA	V71A	F112MB
27	V2CL	V68F	F104BD
28	V2CL	V67F	F103AD
29	V2CL	V67F	V68F
30	V2CL	V52F	F104BD
31	V2CL	V52F	V67F
32	V2CL	V51F	F103AD
33	V2CL	V51F	V68F
34	V2CL	V51F	V52F
35	V7CL	V67F	F103AD
36	V7CL	V51F	F103AD
37	V7CL	V71A	F103AD
38	V7CL	F110MA	V71A
39	V46F	V67F	F103AD
40	V46F	V51F	F103AD
41	V46F	V71A	F103AD
42	V46F	F110MA	V71A
43	V14CL	V67F	F103AD
44	V14CL	V51F	F103AD

TABLE 10.4.9B-3a (Cont'd)

Cut Set	Component	
45	V14CL	V71A	F103AD
46	V14CL	F110MA	V71A
47	V6CL	V15A	V66F
48	V6CL	V15A	V18B
49	V6CL	V15A	V18
50	V6CL	V15	V66F
51	V6CL	V15	V18B
52	V6CL	V15	V18
53	V6CL	V63F	V66F
54	V6CL	V63F	V18B
55	V6CL	V63F	V18
56	V6CL	F112MB	F103AD
57	V6CL	F110MA	F104BD
58	V6CL	F110MA	F112MB
59	V6CL	V7CL	F103AD
60	V6CL	V7CL	F110MA
61	V6CL	V46F	F103AD
62	V6CL	V46F	F110MA
63	V6CL	V14CL	F103AD
64	V6CL	V14CL	F110MA
65	V1CL	V15A	V66F
66	V1CL	V15A	V18B
67	V1CL	V15A	V18
68	V1CL	V15	V66F
69	V1CL	V15	V18B
70	V1CL	V15	V18
71	V1CL	V63F	V66F
72	V1CL	V63F	V18B
73	V1CL	V63F	V18
74	V1CL	F112MB	F103AD
75	V1CL	F110MA	F104BD
76	V1CL	F110MA	F112MB
77	V1CL	V7CL	F103AD
78	V1CL	V7CL	F110MA
79	V1CL	V46F	F103AD
80	V1CL	V46F	F110MA
81	V1CL	V14CL	F103AD
82	V1CL	V14CL	F110MA
83	F111T	V15A	V66F
84	F111T	V15A	V18B
85	F111T	V15A	V18
86	F111T	V15	V66F
87	F111T	V15	V18B
88	F111T	V15	V18

TABLE 10.4.9B-3a (Cont'd)

Cut Set		Component	
89	F111T	V63F	V66F
90	F111T	V63F	V18B
91	F111T	V63F	V18
92	F111T	F112MB	F103AD
93	F111T	F110MA	F104BD
94	F111T	F110MA	F112MB
95	F111T	V7CL	F103AD
96	F111T	V7CL	F110MA
97	F111T	V46F	F103AD
98	F111T	V46F	F110MA
99	F111T	V14CL	F103AD
100	F111T	V14CL	F110MA
101	V13CL	V15A	V66F
102	V13CL	V15A	V18B
103	V13CL	V15A	V18
104	V13CL	V15	V66F
105	V13CL	V15	V18B
106	V13CL	V15	V18
107	V13CL	V63F	V66F
108	V13CL	V63F	V18B
109	V13CL	V63F	V18
110	V13CL	F112MB	F103AD
111	V13CL	F110MA	F104BD
112	V13CL	F110MA	F112MB
113	V13CL	V7CL	F103AD
114	V13CL	V7CL	F110MA
115	V13CL	V46F	F103AD
116	V13CL	V46F	F110MA
117	V13CL	V14CL	F103AD
118	V13CL	V14CL	F110MA
119	V45F	V15A	V66F
120	V45F	V15A	V18B
121	V45F	V15A	V18
122	V45F	V15	V66F
123	V45F	V15	V18B
124	V45F	V15	V18
125	V45F	V63F	V66F
126	V45F	V63F	V18B
127	V45F	V63F	V18
128	V45F	F112MB	F103AD
129	V45F	F110MA	F104BD
130	V45F	F110MA	F112MB
131	V45F	V7CL	F103AD
132	V45F	V7CL	F110MA

TABLE 10.4.9B-3a (Cont'd)

Cut Set	Component		
133	V45F	V46F	F103AD
134	V45F	V46F	F110MA
135	V45F	V14CL	F103AD
136	V45F	V14CL	F110MA
137	V12CL	V68F	F104BD
138	V12CL	V52F	F104BD
139	V12CL	V71A	F104BD
140	V12CL	V71A	F112MB
141	V12CL	V7CL	V71A
142	V12CL	V46F	V71A
143	V12CL	V14CL	V71A
144	V12CL	V6CL	F104BD
145	V12CL	V6CL	F112MB
146	V12CL	V6CL	V7CL
147	V12CL	V6CL	V46F
148	V12CL	V6CL	V14CL
149	V12CL	V1CL	F104BD
150	V12CL	V1CL	F112MB
151	V12CL	V1CL	V7CL
152	V12CL	V1CL	V46F
153	V12CL	V1CL	V14CL
154	V12CL	F111T	F104BD
155	V12CL	F111T	F112MB
156	V12CL	F111T	V7CL
157	V12CL	F111T	V46F
158	V12CL	F111T	V14CL
159	V12CL	V13CL	F104BD
160	V12CL	V13CL	F112MB
161	V12CL	V13CL	V7CL
162	V12CL	V13CL	V46F
163	V12CL	V13CL	V14CL
164	V12CL	V45F	F104BD
165	V12CL	V45F	F112MB
166	V12CL	V45F	V7CL
167	V12CL	V45F	V46F
168	V12CL	V45F	V14CL
169	V44F	V68F	F104BD
170	V44F	V52F	F104BD
171	V44F	V71A	F104BD
172	V44F	V71A	F112MB
173	V44F	V7CL	V71A
174	V44F	V46F	V71A
175	V44F	V14CL	V71A
176	V44F	V6CL	F104BD

TABLE 10.4.9B-3a (Cont'd)

Cut Set		Component	
177	V44F	V6CL	F112MB
178	V44F	V6CL	V7CL
179	V44F	V6CL	V46F
180	V44F	V6CL	V14CL
181	V44F	V1CL	F104BD
182	V44F	V1CL	F112MB
183	V44F	V1CL	V7CL
184	V44F	V1CL	V46F
185	V44F	V1CL	V14CL
186	V44F	F111T	F104BD
187	V44F	F111T	F112MB
188	V44F	F111T	V7CL
189	V44F	F111T	V46F
190	V44F	F111T	V14CL
191	V44F	V13CL	F104BD
192	V44F	V13CL	F112MB
193	V44F	V13CL	V7CL
194	V44F	V13CL	V46F
195	V44F	V13CL	V14CL
196	V44F	V45F	F104BD
197	V44F	V45F	F112MB
198	V44F	V45F	V7CL
199	V44F	V45F	V46F
200	V44F	V45F	V14CL
201	V5CL	V68F	F104BD
202	V5CL	V52F	F104BD
203	V5CL	V71A	F104BD
204	V5CL	V71A	F112MB
205	V5CL	V7CL	V71A
206	V5CL	V46F	V71A
207	V5CL	V14CL	V71A
208	V5CL	V6CL	F104BD
209	V5CL	V6CL	F112MB
210	V5CL	V6CL	V7CL
211	V5CL	V6CL	V46F
212	V5CL	V6CL	V14CL
213	V5CL	V1CL	F104BD
214	V5CL	V1CL	F112MB
215	V5CL	V1CL	V7CL
216	V5CL	V1CL	V46F
217	V5CL	V1CL	V14CL
218	V5CL	F111T	F104BD
219	V5CL	F111T	F112MB
220	V5CL	F111T	V7CL

TABLE 10.4.9B-3a (Cont'd)

Cut Set		Component	
221	V5CL	F111T	V46F
222	V5CL	F111T	V14CL
223	V5CL	V13CL	F104BD
224	V5CL	V13CL	F112MB
225	V5CL	V13CL	V7CL
226	V5CL	V13CL	V46F
227	V5CL	V13CL	V14CL
228	V5CL	V45F	F104BD
229	V5CL	V45F	F112MB
230	V5CL	V45F	V7CL
231	V5CL	V45F	V46F
232	V5CL	V45F	V14CL
233	V17A	F110MA	F104BD
234	V17A	V2CL	F104BD
235	V17A	V12CL	F104BD
235	V17A	V44F	F104BD
237	V17A	V5CL	F104BD
238	V17	F110MA	F104BD
239	V17	V2CL	F104BD
240	V17	V12CL	F104BD
241	V17	V44F	F104BD
242	V17	V5CL	F104BD
243	V16B	F112MB	F103AD
244	V16B	V2CL	F103AD
245	V16B	V7CL	F103AD
246	V16B	V46F	F103AD
247	V16B	V14CL	F103AD
248	V16B	V17A	V2CL
249	V16B	V17	V2CL
250	V16	F112MB	F103AD
251	V16	V2CL	F103AD
252	V16	V7CL	F103AD
253	V16	V46F	F103AD
254	V16	V14CL	F103AD
255	V16	V17A	V2CL
256	V16	V17	V2CL
257	V65F	F110MA	F104BD
258	V65F	V2CL	F104BD
259	V65F	V12CL	F104BD
260	V65F	V44F	F104BD
261	V65F	V5CL	F104BD
262	V65F	V16B	V2CL
263	V65F	V16	V2CL
264	V64F	F112MB	F103AD

TABLE 10.4.9B-3a (Cont'd)

Cut Set		Component	
265	V64F	V2CL	F103AD
266	V64F	V7CL	F103AD
267	V64F	V46F	F103AD
268	V64F	V14CL	F103AD
269	V64F	V17A	V2CL
270	V64F	V17	V2CL
271	V64F	V65F	V2CL
272	V50F	V71A	V15A
273	V50F	V71A	V15
274	V50F	V71A	V63F
275	V50F	V6CL	V15A
276	V50F	V6CL	V15
277	V50F	V6CL	V63F
278	V50F	V1CL	V15A
279	V50F	V1CL	V15
280	V50F	V1CL	V63F
281	V50F	F111T	V15A
282	V50F	F111T	V15
283	V50F	F111T	V63F
284	V50F	V13CL	V15A
285	V50F	V13CL	V15
286	V50F	V13CL	V63F
287	V50F	V45F	V15A
288	V50F	V45F	V15
289	V50F	V45F	V63F
290	V49F	F110MA	F104BD
291	V49F	V2CL	F104BD
292	V49F	V12CL	F104BD
293	V49F	V44F	F104BD
294	V49F	V5CL	F104BD
295	V49F	V16B	V2CL
296	V49F	V16	V2CL
297	V49F	V64F	V2CL
298	V48F	F112MB	F103AD
299	V48F	V2CL	F103AD
300	V48F	V7CL	F103AD
301	V48F	V46F	F103AD
302	V48F	V14CL	F103AD
303	V48F	V17A	V2CL
304	V48F	V17	V2CL
305	V48F	V65F	V2CL
306	V48F	V49F	V2CL
307	V47F	V71A	V66F
308	V47F	V71A	V18B

TABLE 10.4.9B-3a (Cont'd)

Cut Set		Component	
309	V47F	V71A	V18
310	V47F	V6CL	V66F
311	V47F	V6CL	V18B
312	V47F	V6CL	V18
313	V47F	V1CL	V66F
314	V47F	V1CL	V18B
315	V47F	V1CL	V18
316	V47F	F111T	V66F
317	V47F	F111T	V18B
318	V47F	F111T	V18
319	V47F	V13CL	V66F
320	V47F	V13CL	V18B
321	V47F	V13CL	V18
322	V47F	V45F	V66F
323	V47F	V45F	V18B
324	V47F	V45F	V18
325	V47F	V50F	V71
326	V47F	V50F	V6CL
327	V47F	V50F	V1CL
328	V47F	V50F	F111T
329	V47F	V50F	V13CL
330	V47F	V50F	V45F

TABLE 10.4.9B-3b

CUT SETS - LOOP
AUTOMATIC AUXILIARY FEEDWATER
SYSTEM STUDY

Cut Set	Component		
1	F103AD	F104BD	
2	V2CL	V71A	
3	V6CL	V2CL	
4	V1CL	V2CL	
5	F111T	V2CL	
6	V13CL	V2CL	
7	V45F	V2CL	
8	F105	F106	OE5
9	F104BD	F105	OE5
10	F103AD	F106	OE5
11	V68F	F104BD	F101AA
12	V67F	F103AD	F102BA
13	V52F	F104BD	F101AA
14	V51F	F103AD	F102BA
15	F112MB	V67F	F103AD
16	F112MB	V51F	F103AD
17	V71A	V15A	V66F
18	V71A	V15A	F102BA
19	V71A	V15A	V18B
20	V71A	V15A	V18
21	V71A	F101AA	V66F
22	V71A	F101AA	F102BA
23	V71A	F101AA	V18B
24	V71A	F101AA	V18
25	V71A	V15	V66F
26	V71A	V15	F102BA
27	V71A	V15	V18B
28	V71A	V15	V18
29	V71A	V63F	V66F
30	V71A	V63F	F102BA
31	V71A	V63F	V18B
32	V71A	V63F	V18
33	V71A	F104BD	F101AA
34	V71A	F103AD	F102BA
35	V71A	F112MB	F101AA
36	V71A	F112MB	F103AD
37	F110MA	V68F	F104BD
38	F110MA	V52F	F104BD
39	F110MA	V71A	F102BA
40	F110MA	V71A	F104BD
41	F110MA	V71A	F112MB
42	V2CL	V68F	F104BD

TABLE 10.4.9B-3b (Cont'd)

Cut Set		Component	
43	V2CL	V67F	F103AD
44	V2CL	V67F	V68F
45	V2CL	V52F	F104BD
46	V2CL	V52F	V67F
47	V2CL	V51F	F103AD
48	V2CL	V51F	V68F
49	V2CL	V51F	V52F
50	V7CL	V67F	F103AD
51	V7CL	V51F	F103AD
52	V7CL	V71A	F101AA
53	V7CL	V71A	F103AD
54	V7CL	F110MA	V71A
55	V46F	V67F	F103AD
56	V46F	V51F	F103AD
57	V46F	V71A	F101AA
58	V46F	V71A	F103AD
59	V46F	F110MA	V71A
60	V14CL	V67F	F103AD
61	V14CL	V51F	F103AD
62	V14CL	V71A	F101AA
63	V14CL	V71A	F103AD
64	V14CL	F110MA	V71A
65	V6CL	V15A	V66F
66	V6CL	V15A	F102BA
67	V6CL	V15A	V18B
68	V6CL	V15A	V18
69	V6CL	F101AA	V66F
70	V6CL	F101AA	F102BA
71	V6CL	F101AA	V18B
72	V6CL	F101AA	V18
73	V6CL	V15	V66F
74	V6CL	V15	F102BA
75	V6CL	V15	V18B
76	V6CL	V15	V18
77	V6CL	V63F	V66F
78	V6CL	V63F	F102BA
79	V6CL	V63F	V18B
80	V6CL	V63F	V18
81	V6CL	F104BD	F101AA
82	V6CL	F103AD	F102BA
83	V6CL	F112MB	F101AA
84	V6CL	F112MB	F103AD

TABLE 10.4.9B-3b (Cont'd)

Cut Set		Component	
85	V6CL	F110MA	F102BA
86	V6CL	F110MA	F104BD
87	V6CL	F110MA	P112MB
88	V6CL	V7CL	F101AA
89	V6CL	V7CL	F103AD
90	V6CL	V7CL	F110MA
91	V6CL	V46F	F101AA
92	V6CL	V46F	F103AD
93	V6CL	V46F	F110MA
94	V6CL	V14CL	F101AA
95	V6CL	V14CL	F103AD
96	V6CL	V14CL	F110MA
97	V1CL	V15A	V66F
98	V1CL	V15A	F102BA
99	V1CL	V15A	V18B
100	V1CL	V15A	V18
101	V1CL	F101AA	V66F
102	V1CL	F101AA	F102BA
103	V1CL	F101AA	V18B
104	V1CL	F101AA	V18
105	V1CL	V15	V66F
106	V1CL	V15	F102BA
107	V1CL	V15	V18B
108	V1CL	V15	V18
109	V1CL	V63F	V66F
110	V1CL	V63F	F102BA
111	V1CL	V63F	V18B
112	V1CL	V63F	V18
113	V1CL	F104BD	F101AA
114	V1CL	F103AD	F102BA
115	V1CL	F112MB	F101AA
116	V1CL	F112MB	F103AD
117	V1CL	F110MA	F102BA
118	V1CL	F110MA	F104BD
119	V1CL	F110MA	F112MB
120	V1CL	V7CL	F101AA
121	V1CL	V7CL	F103AD
122	V1CL	V7CL	F110MA
123	V1CL	V46F	F101AA
124	V1CL	V46F	F103AD
125	V1CL	V46F	F110MA
126	V1CL	V14CL	F101AA

TABLE 10.4.9B-3b (Cont'd)

Cut Set		Component	
127	V1CL	V14CL	F103AD
128	V1CL	V14CL	F110MA
129	F111T	V15A	V66F
130	F111T	V15A	F102BA
131	F111T	V15A	V18B
132	F111T	V15A	V18
133	F111T	F101AA	V66F
134	F111T	F101AA	F102BA
135	F111T	F101AA	V18B
136	F111T	F101AA	V18
137	F111T	V15	V66F
138	F111T	V15	F102BA
139	F111T	V15	V18B
140	F111T	V15	V18
141	F111T	V63F	V66F
142	F111T	V63F	F102BA
143	F111T	V63F	V18B
144	F111T	V63F	V18
145	F111T	F104BD	F101AA
146	F111T	F103AD	F102BA
147	F111T	F112MB	F101AA
148	F111T	F112MB	F103AD
149	F111T	F110MA	F102BA
150	F111T	F110MA	F104BD
151	F111T	F110MA	F112MB
152	F111T	V7CL	F101AA
153	F111T	V7CL	F103AD
154	F111T	V7CL	F110MA
155	F111T	V46F	F101AA
156	F111T	V46F	F103AD
157	F111T	V46F	F110MA
158	F111T	V14CL	F101AA
159	F111T	V14CL	F103AD
160	F111T	V14CL	F110MA
161	V13CL	V15A	V66F
162	V13CL	V15A	F102BA
163	V13CL	V15A	V18B
164	V13CL	V15A	V18
165	V13CL	F101AA	V66F
166	V13CL	F101AA	F102BA
167	V13CL	F101AA	V18B
168	V13CL	F101AA	V18

TABLE 10.4.9B-3b (Cont'd)

Cut Set		Component	
169	V13CL	V15	V66F
170	V13CL	V15	F102BA
171	V13CL	V15	V18B
172	V13CL	V15	V18
173	V13CL	V63F	V66F
174	V13CL	V63F	F102BA
175	V13CL	V63F	V18B
176	V13CL	V63F	V18
177	V13CL	F104BD	F101AA
178	V13CL	F103AD	F102BA
179	V13CL	F112MB	F101AA
180	V13CL	F112MB	F103AD
181	V13CL	F110MA	F102BA
182	V13CL	F110MA	F104BD
183	V13CL	F110MA	F112MB
184	V13CL	V7CL	F101AA
185	V13CL	V7CL	F103AD
186	V13CL	V7CL	F110MA
187	V13CL	V46F	F101AA
188	V13CL	V46F	F103AD
189	V13CL	V46F	F110MA
190	V13CL	V14CL	F101AA
191	V13CL	V14CL	F103AD
192	V13CL	V14CL	F110MA
193	V45F	V15A	V66F
194	V45F	V15A	F102BA
195	V45F	V15A	V18B
196	V45F	V15A	V18
197	V45F	F101AA	V66F
198	V45F	F101AA	F102BA
199	V45F	F101AA	V18B
200	V45F	F101AA	V18
201	V45F	V15	V66F
202	V45F	V15	F102BA
203	V45F	V15	V18B
204	V45F	V15	V18
205	V45F	V63F	V66F
206	V45F	V63F	F102BA
207	V45F	V63F	VI8B
208	V45F	V63F	V18
209	V45F	F104BD	F101AA
210	V45F	F103AD	F102BA

TABLE 10.4.9B-3b (Cont'd)

Cut Set		Component	
211	V45F	F112MB	F101AA
212	V45F	F112MB	F103AD
213	V45F	F110MA	F102BA
214	V45F	F110MA	F104BD
215	V45F	F110MA	F112MB
216	V45F	V7CL	F101AA
217	V45F	V7CL	F103AD
218	V45F	V7CL	F110MA
219	V45F	V46F	F101AA
220	V45F	V46F	F103AD
221	V45F	V46F	F110MA
222	V45F	V14CL	F101AA
223	V45F	V14CL	F103AD
224	V45F	V14CL	F110MA
225	V12CL	V68F	F104BD
226	V12CL	V52F	F104BD
227	V12CL	V71A	F102BA
228	V12CL	V71A	F104BD
229	V12CL	V71A	F112MB
230	V12CL	V7CL	V71A
231	V12CL	V46F	V71A
232	V12CL	V14CL	V71A
233	V12CL	V6CL	F102BA
234	V12CL	V6CL	F104BD
235	V12CL	V6CL	F112MB
236	V12CL	V6CL	V7CL
237	V12CL	V6CL	V46F
238	V12CL	V6CL	V14CL
239	V12CL	V1CL	F102BA
240	V12CL	V1CL	F104BD
241	V12CL	V1CL	F112MB
242	V12CL	V1CL	V7CL
243	V12CL	V1CL	V46F
244	V12CL	V1CL	V14CL
245	V12CL	F111T	F102BA
246	V12CL	F111T	F104BD
247	V12CL	F111T	F112MB
248	V12CL	F111T	V7CL
249	V12CL	F111T	V46F
250	V12CL	F111T	V14CL
251	V12CL	V13CL	F102BA
252	V12CL	V13CL	F104BD

TABLE 10.4.9B-3b (Cont'd)

Cut Set	Component		
253	V12CL	V13CL	F112MB
254	V12CL	V13CL	V7CL
255	V12CL	V13CL	V46F
256	V12CL	V13CL	V14CL
257	V12CL	V45F	F102BA
258	V12CL	V45F	F104BD
259	V12CL	V45F	F112MB
260	V12CL	V45F	V7CL
261	V12CL	V45F	V46F
262	V12CL	V45F	V14CL
263	V44F	V68F	F104BD
264	V44F	V52F	F104BD
265	V44F	V71A	F102BA
266	V44F	V71A	F104BD
267	V44F	V71A	F112MB
268	V44F	V7CL	V71A
269	V44F	V46F	V71A
270	V44F	V14CL	V71A
271	V44F	V6CL	F102BA
272	V44F	V6CL	F104BD
273	V44F	V6CL	F112MB
274	V44F	V6CL	V7CL
275	V44F	V6CL	V46F
276	V44F	V6CL	V14CL
277	V44F	V1CL	F102BA
278	V44F	V1CL	F104BD
279	V44F	V1CL	F112MB
280	V44F	V1CL	V7CL
281	V44F	V1CL	V46F
282	V44F	V1CL	V14CL
283	V44F	F111T	F102BA
284	V44F	F111T	F104BD
285	V44F	F111T	F112MB
286	V44F	F111T	V7CL
287	V44F	F111T	V46F
288	V44F	F111T	V14CL
289	V44F	V13CL	F102BA
290	V44F	V13CL	F104BD
291	V44F	V13CL	F112MB
292	V44F	V13CL	V7CL
293	V44F	V13CL	V46F
294	V44F	V13CL	V14CL

TABLE 10.4.9B-3b (Cont'd)

Cut Set		Component	
295	V44F	V45F	F102BA
296	V44F	V45F	F104BD
297	V44F	V45F	F112MB
298	V44F	V45F	V7CL
299	V44F	V45F	V46F
300	v44F	V45F	V14CL
301	V5CL	V68F	F104BD
302	V5CL	V52F	F104BD
303	V5CL	V71A	F102BA
304	V5CL	V71A	F104BD
305	V5CL	V71A	F112MB
306	V5CL	V7CL	V71A
307	V5CL	V46F	V71A
308	V5CL	V14CL	V71A
309	V5CL	V6CL	F102BA
310	V5CL	V6CL	F104BD
311	V5CL	V6CL	F112MB
312	V5CL	V6CL	V7CL
313	V5CL	V6CL	V46F
314	V5CL	V6CL	V14CL
315	V5CL	V1CL	F102BA
316	V5CL	V1CL	F104BD
317	V5CL	V1CL	F112MB
318	V5CL	V1CL	V7CL
319	V5CL	V1CL	V46F
320	V5CL	V1CL	V14CL
321	V5CL	F111T	F102BA
322	V5CL	F111T	F104BD
323	V5CL	F111T	F112MB
324	V5CL	F111T	V7CL
325	V5CL	F111T	V46F
326	V5CL	F111T	V14CL
327	V5CL	V13CL	F102BA
328	V5CL	V13CL	F104BD
329	V5CL	V13CL	F112MB
330	V5CL	V13CL	V7CL
331	V5CL	V13CL	V46F
332	V5CL	V13CL	V14CL
333	V5CL	V45F	F102BA
334	V5CL	V45F	F104BD
335	V5CL	V45F	F112MB
336	V5CL	V45F	V7CL

TABLE 10.4.9B-3b (Cont'd)

Cut Set	Component	
337	V5CL	V45F	V46F
338	V5CL	V45F	V14CL
339	V17A	F104BD	F101AA
340	V17A	F110MA	F104BD
341	V17A	V2CL	F104BD
342	V17A	V12CL	F104BD
343	V17A	V44F	F104BD
344	V17A	V5CL	F104BD
345	V17	F104BD	F101AA
346	V17	F110MA	F104BD
347	V17	V2CL	F104BD
348	V17	V12CL	F104BD
349	V17	V44F	F104BD
350	V17	V5CL	F104BD
351	V16B	F103AD	F102BA
352	V16B	F112MB	F103AD
353	V16B	V2CL	F103AD
354	V16B	V7CL	F103AD
355	V16B	V46F	F103AD
356	V16B	V14CL	F103AD
357	V16B	V17A	V2CL
358	V16B	V17	V2CL
359	V16	F103AD	F102BA
360	V16	F112MB	F103AD
361	V16	V2CL	F103AD
362	V16	V7CL	F103AD
363	V16	V46F	F103AD
364	V16	V14CL	F103AD
365	V16	V17A	V2CL
366	V16	V17	V2CL
367	V65F	F104BD	F101AA
368	V65F	F110MA	F104BD
369	V65F	V2CL	F104BD
370	V65F	V12CL	F104BD
371	V65F	V44F	F104BD
372	V65F	V5CL	F104BD
373	V65F	V16B	V2CL
374	V65F	V16	V2CL
375	V64F	F103AD	F102BA
376	V64F	F112MB	F103AD
377	V64F	V2CL	F103AD
378	V64F	V7CL	F103AD

TABLE 10.4.9B-3b (Cont'd)

Cut Set		Component.	
379	V64F	V46F	F103AD
380	V64F	V14CL	F103AD
381	V64F	V17A	V2CL
382	V64F	V17	V2CL
383	V64F	V65F	V2CL
384	V50F	V71A	V15A
385	V50F	V71A	F101AA
386	V50F	V71A	V15
387	V50F	V71A	V63F
388	V50F	V6CL	V15A
389	V50F	V6CL	F101AA
390	V50F	V6CL	V15
391	V50F	V6CL	V63F
392	V50F	V1CL	V15A
393	V50F	V1CL	F101AA
394	V50F	V1CL	V15
395	V50F	V1CL	V63F
396	V50F	F111T	V15A
397	V50F	F111T	F101AA
398	V50F	F111T	V15
399	V50F	F111T	V63F
400	V50F	V13CL	V15A
401	V50F	V13CL	F101AA
402	V50F	V13CL	V15
403	V50F	V13CL	V63F
404	V50F	V45F	V15A
405	V50F	V45F	F101AA
406	V50F	V45F	V15
407	V50F	V45F	V63F
408	V49F	F104BD	F101AA
409	V49F	F110MA	F104BD
410	V49F	V2CL	F104BD
411	V49F	V12CL	F104BD
412	V49F	V44F	F104BD
413	V49F	V5CL	F104BD
414	V49F	V16B	V2CL
415	V49F	V16	V2CL
416	V49F	V64F	V2CL
417	V48F	F103AD	F102BA
418	V48F	F112MB	F103AD
419	V48F	V2CL	F103AD
420	V48F	V7CL	F103AD

TABLE 10.4.9B-3b (Cont'd)

Cut Set		Component	
421	V48F	V46F	F103AD
422	V48F	V14CL	F103AD
423	V48F	V17A	V2CL
424	V48F	V17	V2CL
425	V48F	V65F	V2CL
426	V48F	V49F	V2CL
427	V47F	V71A	V66F
428	V47F	V71A	F102BA
429	V47F	V71A	V18B
430	V47F	V71A	V18
431	V47F	V6CL	V66F
432	V47F	V6CL	F102BA
433	V47F	V6CL	V18B
434	V47F	V6CL	V18
435	V47F	V1CL	V66F
436	V47F	V1CL	F102BA
437	V47F	V1CL	V18B
438	V47F	V1CL	V18
439	V47F	F111T	V66F
440	V47F	F111T	F102BA
441	V47F	F111T	V18B
442	V47F	F111T	V18
443	V47F	V13CL	V66F
444	V47F	V13CL	F102BA
445	V47F	V13CL	V18B
446	V47F	V13CL	V18
447	V47F	V45F	V66F
448	V47F	V45F	F102BA
449	V47F	V45F	V18B
450	V47F	V45F	V18
451	V47F	V50F	V71A
452	V47F	V50F	V6CL
453	V47F	V50F	V1CL
454	V47F	V50F	F111T
455	V47F	V50F	V13CL
456	V47F	V50F	V45F

TABLE 10.4.9B-3c

CUT SETS - SBLO
AUTOMATIC AUXILIARY FEEDWATER
SYSTEM STUDY

Cut Set	Component		
1	V71A		
2	V1CL		
3	V6CL		
4	F111T		
5	V45F		
6	V13CL		
7	F103AD	F104BD	
8	V68A	F104BD	
9	V67B	F103AD	
10	V67B	V68A	
11	V52F	F104BD	
12	V52F	V67B	
13	V51F	F103AD	
14	V51F	V68A	
15	V51F	V52F	
16	V65F	F104BD	
17	V64F	F103AD	
18	V64F	V65F	
19	V17A	F104BD	
20	V17A	V64F	
21	V17	F104BD	
22	V17	V64F	
23	V49F	F104BD	
24	V49F	V64F	
25	V16B	F103AD	
26	V16B	V65F	
27	V16B	V17A	
28	V16B	V17	
29	V16B	V49F	
30	V16	F103AD	
31	V16	V65F	
32	V16	V17A	
33	V16	V17	
34	V16	V49F	
35	V48F	F103AD	
36	V48F	V65F	
37	V48F	V17A	
38	V48F	V17	
39	V48F	V49F	
40	F105	OE5	F106
41	F104BD	F105	OE5
42	F103AD	OE5	F106
43	V68A	OE5	F106
44	V67B	F105	OE5

TABLE 10.4.9B-3c (Cont'd)

Cut Set		Component	
45	V52F	OE5	F106
46	V51F	F105	OE5
47	F65F	OE5	F106
48	V64F	F105	OE5
49	V17A	OE5	F106
50	V17	OE5	F106
51	V49F	OE5	F106
52	V16B	F105	OE5
53	V16	F105	OE5
54	V48F	F105	OE5

TABLE 10.4.9B-4a

CUT SETS - LOFW
MANUAL AUXILIARY FEEDWATER
SYSTEM STUDY

Cut Set	Component		
1	OE1		
2	F103AD	F104BD	
3	V2CL	V1CL	
4	V2CL	V6CL	
5	V2CL	OE2	
6	V2CL	F111T	
7	V2CL	V71F	
8	V45F	V2CL	
9	V13CL	V2CL	
10	F103AD	F112MB	OE3
11	V1CL	F110MA	F104BD
12	V1CL	F110MA	F112MB
13	V1CL	F103AD	F112MB
14	V6CL	F110MA	F104BD
15	V6CL	F110MA	F112MB
16	V6CL	F103AD	F112MB
17	OE2	F110MA	F104BD
18	OE2	F110MA	F112MB
19	OE2	F103AD	F112MB
20	F111T	F110MA	F104BD
21	F111T	F110MA	F112MB
22	F111T	F103AD	F112MB
23	V63F	V66F	V1CL
24	V63F	V66F	V6CL
25	V63F	V66F	OE2
26	V63F	V66F	F111T
27	V71F	F110MA	F104BD
28	V71F	F110MA	F112MB
29	V71F	F103AD	F112MB
30	V71F	V63F	V66F
31	V2CL	F103AD	OE3
32	V2CL	V67F	V68F
33	V2CL	V52F	V67F
34	V2CL	V51F	V68F
35	V2CL	V51F	V52F
36	V7CL	F103AD	OE3
37	V7CL	V1CL	F110MA
38	V7CL	V1CL	F103AD
39	V7CL	V6CL	F110MA
40	V7CL	V6CL	F103AD
41	V7CL	OE2	F110MA
42	V7CL	OE2	F103AD

TABLE 10.4.9B-4a (Cont'd)

Cut Set		Component.	
43	V7CL	F111T	F110MA
44	V7CL	F111T	F103AD
45	V7CL	V71F	F110MA
46	V7CL	V71F	F103AD
47	V46F	F103AD	OE3
48	V46F	V1CL	F110MA
49	V46F	V1CL	F103AD
50	V46F	V6CL	F110MA
51	V46F	V6CL	F103AD
52	V46F	OE2	F110MA
53	V46F	OE2	F103AD
54	V46F	F111T	F110MA
55	V46F	F111T	F103AD
56	V46F	V71F	F110MA
57	V46F	V71F	F103AD
58	V14CL	F103AD	OE3
59	V14CL	V1CL	F110MA
60	V14CL	V1CL	F103AD
61	V14CL	V6CL	F110MA
62	V14CL	V6CL	F103AD
63	V14CL	OE2	F110MA
64	V14CL	OE2	F103AD
65	V14CL	F111T	F110MA
66	V14CL	F111T	F103AD
67	V14CL	V71F	F110MA
68	V14CL	V71F	F103AD
69	V45F	F110MA	F104BD
70	V45F	F110MA	F112MB
71	V45F	F103AD	F112MB
72	V45F	V63F	V66F
73	V45F	V7CL	F110MA
74	V45F	V7CL	F103AD
75	V45F	V46F	F110MA
76	V45F	V46F	F103AD
77	V45F	V14CL	F110MA
78	V45F	V14CL	F103AD
79	V13CL	F110MA	F104BD
80	V13CL	F110MA	F112MB
81	V13CL	F103AD	F112MB
82	V13CL	V63F	V66F
83	V13CL	V7CL	F110MA
84	V13CL	V7CL	F103AD

TABLE 10.4.9B-4a (Cont'd)

Cut Set		Component	
85	V13CL	V46F	F110MA
86	V13CL	V46F	F103AD
87	V13CL	V14CL	F110MA
88	V13CL	V14CL	F103AD
89	V12CL	V1CL	F104BD
90	V12CL	V1CL	F112MB
91	V12CL	V6CL	F104BD
92	V12CL	V6CL	F112MB
93	V12CL	OE2	F104BD
94	V12CL	OE2	F112MB
95	V12CL	F111T	F104BD
96	V12CL	F111T	F112MB
97	V12CL	V71F	F104BD
98	V12CL	V71F	F112MB
99	V12CL	V7CL	V1CL
100	V12CL	V7CL	V6CL
101	V12CL	V7CL	OE2
102	V12CL	V7CL	F111T
103	V12CL	V7CL	V71F
104	V12CL	V46F	V1CL
105	V12CL	V46F	V6CL
106	V12CL	V46F	OE2
107	V12CL	V46F	F111T
108	V12CL	V46F	V71F
109	V12CL	V14CL	V1CL
110	V12CL	V14CL	V6CL
111	V12CL	V14CL	OE2
112	V12CL	V14CL	F111T
113	V12CL	V14CL	V71F
114	V12CL	V45F	F104BD
115	V12CL	V45F	F112MB
116	V12CL	V45F	V7CL
117	V12CL	V45F	V46F
118	V12CL	V45F	V14CL
119	V12CL	V13CL	F104BD
120	V12CL	V13CL	F112MB
121	V12CL	V13CL	V7CL
122	V12CL	V13CL	V46F
123	V12CL	V13CL	V14CL
124	V44F	V1CL	F104BD
125	V44F	V1CL	F112MB
126	V44F	V6CL	F104BD

TABLE 10.4.9B-4a (Cont'd)

Cut Set		Component	
127	V44F	V6CL	F112MB
128	V44F	OE2	F104BD
129	V44F	OE2	F112MB
130	V44F	F111T	F104BD
131	V44F	F111T	F112MB
132	V44F	V71F	F104BD
133	V44F	V71F	F112MB
134	V44F	V7CL	V1CL
135	V44F	V7CL	V6CL
136	V44F	V7CL	OE2
137	V44F	V7CL	F111T
138	V44F	V7CL	V71F
139	V44F	V46F	V1CL
140	V44F	V46F	V6CL
141	V44F	V46F	OE2
142	V44F	V46F	F111T
143	V44F	V46F	V71F
144	V44F	V14CL	V1CL
145	V44F	V14CL	V6CL
146	V44F	V14CL	OE2
147	V44F	V14CL	F111T
148	V44F	V14CL	V71F
149	V44F	V45F	F104BD
150	V44F	V45F	F112MB
151	V44F	V45F	V7CL
152	V44F	V45F	V46F
153	V44F	V45F	V14CL
154	V44F	V13CL	F104BD
155	V44F	V13CL	F112MB
156	V44F	V13CL	V7CL
157	V44F	V13CL	V46F
158	V44F	V13CL	V14CL
159	V5CL	V1CL	F104BD
160	V5CL	V1CL	F112MB
161	V5CL	V6CL	F104BD
162	V5CL	V6CL	F112MB
163	V5CL	OE2	F104BD
164	V5CL	OE2	F112MB
165	V5CL	F111T	F104BD
166	V5CL	F111T	F112MB
167	V5CL	V71F	F104BD
168	V5CL	V71F	F112MB

TABLE 10.4.9B-4a (Cont'd)

Cut Set	Component		
169	V5CL	V7CL	V1CL
170	V5CL	V7CL	V6CL
171	V5CL	V7CL	OE2
172	V5CL	V7CL	F111T
173	V5CL	V7CL	V71F
174	V5CL	V46F	V1CL
175	V5CL	V46F	V6CL
176	V5CL	V46F	OE2
177	V5CL	V46F	F111T
178	V5CL	V46F	V71F
179	V5CL	V14CL	V1CL
180	V5CL	V14CL	V6CL
181	V5CL	V14CL	OE2
182	V5CL	V14CL	F111T
183	V5CL	V14CL	V71F
184	V5CL	V45F	F104BD
185	V5CL	V45F	F112MB
186	V5CL	V45F	V7CL
187	V5CL	V45F	V46F
188	V5CL	V45F	V14CL
189	V5CL	V13CL	F104BD
190	V5CL	V13CL	F112MB
191	V5CL	V13CL	V7CL
192	V5CL	V13CL	V46F
193	V5CL	V13CL	V14CL
194	V64F	V65F	V2CL
195	V18CL	V63F	V1CL
196	V18CL	V63F	V6CL
197	V18CL	V63F	OE2
198	V18CL	V63F	F111T
199	V18CL	V71F	V63F
200	V18CL	V45F	V63F
201	V18CL	V13CL	V63F
202	V50F	V63F	V1CL
203	V50F	V63F	V6CL
204	V50F	V63F	OE2
205	V50F	V63F	F111T
206	V50F	V71F	V63F
207	V50F	V45F	V63F
208	V50F	V13CL	V63F
209	V17CL	V64F	V2CL
210	V49F	V64F	V2CL

TABLE 10.4.9B-4a (Cont'd)

Cut Set	Component		
211	V48F	V65F	V2CL
212	V48F	V17CL	V2CL
213	V48F	V49F	V2CL
214	V16CL	V65F	V2CL
215	V16CL	V17CL	V2CL
216	V16CL	V49F	V2CL
217	V47F	V66F	V1CL
218	V47F	V66F	V6CL
219	V47F	V66F	OE2
220	V47F	V66F	F111T
221	V47F	V71F	V66F
222	V47F	V45F	V66F
223	V47F	V13CL	V66F
224	V47F	V18CL	V1CL
225	V47F	V18CL	V6CL
226	V47F	V18CL	OE2
227	V47F	V18CL	F111T
228	V47F	V18CL	V71F
229	V47F	V18CL	V45F
230	V47F	V18CL	V13CL
231	V47F	V50F	V1CL
232	V47F	V50F	V6CL
233	V47F	V50F	OE2
234	V47F	V50F	F111T
235	V47F	V50F	V71F
236	V47F	V50F	V45F
237	V47F	V50F	V13CL
238	V15F	V66F	V1CL
239	V15F	V66F	V6CL
240	V15F	V66F	OE2
241	V15F	V66F	F111T
242	V15F	V71F	V66F
243	V15F	V45F	V66F
244	V15F	V13CL	V66F
245	V15F	V18CL	V1CL
246	V15F	V18CL	V6CL
247	V15F	V18CL	OE2
248	V15F	V18CL	F111T
249	V15F	V18CL	V71F
250	V15F	V18CL	V45F
251	V15F	V18CL	V13CL
252	V15F	V50F	V1CL

TABLE 10.4.9B-4a (Cont'd)

Cut Set	Component		
253	V15F	V50F	V6CL
254	V15F	V50F	OE2
255	V15F	V50F	F111T
256	V15F	V50F	V71F
257	V15F	V50F	V45F
258	V15F	V50F	V13CL

TABLE 10.4.9B-4b

CUT SETS - LOOP
MANUAL AUXILIARY FEEDWATER
SYSTEM STUDY

Cut Set	Component		
1	OE1		
2	F103AD	104BD	
3	V2CL	V1CL	
4	V2CL	V6CL	
5	V2CL	OE2	
6	V2CL	F111T	
7	V2CL	V71F	
8	V45F	V2CL	
9	V13CL	V2CL	
10	F103AD	F102BA	OE3
11	F103AD	F112MB	OE3
12	V1CL	F101AA	F104BD
13	V1CL	F101AA	F102BA
14	V1CL	F112MB	F101AA
15	V1CL	F110MA	F104BD
16	V1CL	F110MA	F102BA
17	V1CL	F110MA	F112MB
18	V1CL	F103AD	F102BA
19	V1CL	F103AD	F112MB
20	V6CL	F101AA	F104BD
21	V6CL	F101AA	F102BA
22	V6CL	F112MB	F101AA
23	V6CL	F110MA	F104BD
24	V6CL	F110MA	F102BA
25	V6CL	F110MA	F112MB
26	V6CL	F103AD	F102BA
27	V6CL	F103AD	F112MB
28	OE2	F101AA	F104BD
29	OE2	F101AA	F102BA
30	OE2	F112MB	F101AA
31	OE2	F110MA	F104BD
32	OE2	F110MA	F102BA
33	OE2	F110MA	F112MB
34	OE2	F103AD	F102BA
35	OE2	F103AD	F112MB
36	F111T	F101AA	F104BD
37	F111T	F101AA	F102BA

TABLE 10.4.9B-4b (Cont'd)

Cut Set	Component		
38	F111T	F112MB	F101AA
39	F111T	F110MA	F104BD
40	F111T	F110MA	F102BA
41	F111T	F110MA	F112MB
42	F111T	F103AD	F102BA
43	F111T	F103AD	F112MB
44	V66F	V1CL	F101AA
45	V66F	V6CL	F101AA
46	V66F	OE2	F101AA
47	V66F	F111T	F101AA
48	V63F	V1CL	F102BA
49	V63F	V6CL	F102BA
50	V63F	OE2	F102BA
51	V63F	F111T	F102BA
52	V63F	V66F	V1CL
53	V63F	V66F	V6CL
54	V63F	V66F	OE2
55	V63F	V66F	F111T
56	V71F	F101AA	F104BD
57	V71F	F101AA	F102BA
58	V71F	F112MB	F101AA
59	V71F	F110MA	F104BD
60	V71F	F110MA	F102BA
61	V71F	F110MA	F112MB
62	V71F	F103AD	F102BA
63	V71F	F103AD	F112MB
64	V71F	V66F	F101AA
65	V71F	V63F	F102BA
66	V71F	V63F	V66F
67	V2CL	F103AD	OE3
68	V2CL	V67F	V68F
69	V2CL	V52F	V67F
70	V2CL	V51F	V68F
71	V2CL	V51F	V52F
72	V7CL	F103AD	OE3
73	V7CL	V1CL	F101AA
74	V7CL	V1CL	F110MA
75	V7CL	V1CL	F103AD
76	V7CL	V6CL	F101AA
77	V7CL	V6CL	F110MA
78	V7CL	V6CL	F103AD
79	V7CL	OE2	F101AA
80	V7CL	OE2	F110MA
81	V7CL	OE2	F103AD
82	V7CL	F111T	F101AA
83	V7CL	F111T	F110MA
84	V7CL	F111T	F103AD

TABLE 10.4.9B-4b (cont'd

Cut Set		Component	
85	V7CL	V71F	F101AA
86	V7CL	V71F	F110MA
87	V7CL	V71F	F103AD
88	V46F	F103AD	OE3
89	V46F	V1CL	F101AA
90	V46F	V1CL	F110MA
91	V46F	V1CL	F103AD
92	V46F	V6CL	F101AA
93	V46F	V6CL	F110MA
94	V46F	V6CL	F103AD
95	V46F	OE2	F101AA
96	V46F	OE2	F110MA
97	V46F	OE2	F103AD
98	V46F	F111T	F101AA
99	V46F	F111T	F110MA
100	V46F	F111T	F103AD
101	V46F	V71F	F101AA
102	V46F	V71F	F110MA
103	V46F	V71F	F103AD
104	V14CL	F103AD	OE3
105	V14CL	V1CL	F101AA
106	V14CL	V1CL	F110MA
107	V14CL	V1CL	F103AD
108	V14CL	V6CL	F101AA
109	V14CL	V6CL	F110MA
110	V14CL	V6CL	F103AD
111	V14CL	OE2	F101AA
112	V14CL	OE2	F110MA
113	V14CL	OE2	F103AD
114	V14CL	F111T	F101AA
115	V14CL	F111T	F110MA
116	V14CL	F111T	F103AD
117	V14CL	V71F	F101AA
118	V14CL	V71F	F110MA
119	V14CL	V71F	F103AD
120	V45F	F101AA	F104BD
121	V45F	F101AA	F102BA
122	V45F	F112MB	F101AA
123	V45F	F110MA	F104BD
124	V45F	F110MA	F102BA
125	V45F	F110MA	F112MB
126	V45F	F103AD	F102BA

TABLE 10.4.9B-4b (Cont'd)

Cut Set		Component	
127	V45F	F103AD	F112MB
128	V45F	V66F	F101AA
129	V45F	V63F	F102BA
130	V45F	V63F	V66F
131	V45F	V7CL	F101AA
132	V45F	V7CL	F110MA
133	V45F	V7CL	F103AD
134	V45F	V46F	F101AA
135	V45F	V46F	F110MA
136	V45F	V46F	F103AD
137	V45F	V14CL	F101AA
138	V45F	V14CL	F110MA
139	V45F	V14CL	F103AD
140	V13CL	F101AA	F104BD
141	V13CL	F101AA	F102BA
142	V13CL	F112MB	F101AA
143	V13CL	F110MA	F104BD
144	V13CL	F110MA	F102BA
145	V13CL	F110MA	F112MB
146	V13CL	F103AD	F102BA
147	V13CL	F103AD	F112MB
148	V13CL	V66F	F101AA
149	V13CL	V63F	F102BA
150	V13CL	V63F	V66F
151	V13CL	V7CL	F101AA
152	V13CL	V7CL	F110MA
153	V13CL	V7CL	F103AD
154	V13CL	V46F	F101AA
155	V13CL	V46F	F110MA
156	V13CL	V46F	F103AD
157	V13CL	V14CL	F101AA
158	V13CL	V14CL	F110MA
159	V13CL	V14CL	F103AD
160	V12CL	V1CL	F104BD
161	V12CL	V1CL	F102BA
162	V12CL	V1CL	F112MB
163	V12CL	V6CL	F104BD
164	V12CL	V6CL	F102BA
165	V12CL	V6CL	F112MB
166	V12CL	OE2	F104BD
167	V12CL	OE2	F102BA
168	V12CL	OE2	F112MB

TABLE 10.4.9B-4b (Cont'd)

Cut Set	Component		
169	V12CL	F111T	F104BD
170	V12CL	F111T	F102BA
171	V12CL	F111T	F112MB
172	V12CL	V71F	F104BD
173	V12CL	V71F	F102BA
174	V12CL	V71F	F112MB
175	V12CL	V7CL	V1CL
176	V12CL	V7CL	V6CL
177	V12CL	V7CL	OE2
178	V12CL	V7CL	F111T
179	V12CL	V7CL	V71F
180	V12CL	V46F	V1CL
181	V12CL	V46F	V6CL
182	V12CL	V46F	OE2
183	V12CL	V46F	F111T
184	V12CL	V46F	V71F
185	V12CL	V14CL	V1CL
186	V12CL	V14CL	V6CL
187	V12CL	V14CL	OE2
188	V12CL	V14CL	F111T
189	V12CL	V14CL	V71F
190	V12CL	V45F	F104BD
191	V12CL	V45F	F102BA
192	V12CL	V45F	F112MB
193	V12CL	V45F	V7CL
194	V12CL	V45F	V46F
195	V12CL	V45F	V14CL
196	V12CL	V13CL	F104BD
197	V12CL	V13CL	F102BA
198	V12CL	V13CL	F112MB
199	V12CL	V13CL	V7CL
200	V12CL	V13CL	V46F
201	V12CL	V13CL	V14CL
202	V44F	V1CL	F104BD
203	V44F	V1CL	F102BA
204	V44F	V1CL	F112MB
205	V44F	V6CL	F104BD
206	V44F	V6CL	F102BA
207	V44F	V6CL	F112MB
208	V44F	OE2	F104BD
209	V44F	OE2	F102BA
210	V44F	OE2	F112MB

TABLE 10.4.9B-4b (Cont'd)

Cut Set		Component	
211	v44F	F111T	F104BD
212	V44F	F111T	F102BA
213	V44F	F111T	F112MB
214	V44F	V71F	F104BD
215	v44F	V71F	F102BA
216	v44F	V71F	F112MB
217	v44F	V7CL	V1CL
218	V44F	V7CL	V6CL
219	V44F	V7CL	OE2
220	V44F	V7CL	F111T
221	V44F	V7CL	V71F
222	V44F	V46F	V1CL
223	v44F	V46F	V6CL
224	v44F	V46F	OE2
225	v44F	V46F	F111T
226	V44F	V46F	V71F
227	v44F	V14CL	V1CL
228	V44F	V14CL	V6CL
229	V44F	V14CL	OE2
230	V44F	V14CL	F111T
231	V44F	V14CL	V71F
232	V44F	V45F	F104BD
233	v44F	V45F	F102BA
234	V44F	V45F	F112MB
235	v44F	V45F	V7CL
236	V44F	V45F	V46F
237	v44F	V45F	V14CL
238	V44F	V13CL	F104BD
239	V44F	V13CL	F102BA
240	V44F	V13CL	F112MB
241	V44F	V13CL	V7CL
242	V44F	V13CL	V46F
243	V44F	V13CL	V14CL
244	V5CL	V1CL	F104BD
245	V5CL	V1CL	F102BA
246	V5CL	V1CL	F112MB
247	V5CL	V6CL	F104BD
248	V5CL	V6CL	F102BA
249	V5CL	V6CL	F112MB
250	V5CL	OE2	F104BD
251	V5CL	OE2	F102BA
252	V5CL	OE2	F112MB

TABLE 10.4.9B-4b (Cont'd)

Cut Set		Component	
253	V5CL	F111T	F104BD
254	V5CL	F111T	F102BA
255	V5CL	F111T	F112MB
256	V5CL	V71F	F104BD
257	V5CL	V71F	F102BA
258	V5CL	V71F	F112MB
259	V5CL	V7CL	V1CL
260	V5CL	V7CL	V6CL
261	V5CL	V7CL	OE2
262	V5CL	V7CL	F111T
263	V5CL	V7CL	V71F
264	V5CL	V46F	V1CL
265	V5CL	V46F	V6CL
266	V5CL	V46F	OE2
267	V5CL	V46F	F111T
268	V5CL	V46F	V71F
269	V5CL	V14CL	V1CL
270	V5CL	V14CL	V6CL
271	V5CL	V14CL	OE2
272	V5CL	V14CL	F111T
273	V5CL	V14CL	V71F
274	V5CL	V45F	F104BD
275	V5CL	V45F	F102BA
276	V5CL	V45F	F112MB
277	V5CL	V45F	V7CL
278	V5CL	V45F	V46F
279	V5CL	V45F	V14CL
280	V5CL	V13CL	F104BD
281	V5CL	V13CL	F102BA
282	V5CL	V13CL	F112MB
283	V5CL	V13CL	V7CL
284	V5CL	V13CL	V46F
285	V5CL	V13CL	V14CL
286	V64F	V65F	V2CL
287	V18CL	V1CL	F101AA
288	V18CL	V6CL	F101AA
289	V18CL	OE2	F101AA
290	V18CL	F111T	F101AA
291	V18CL	V63F	V1CL
292	V18CL	V63F	V6CL
293	V18CL	V63F	OE2
294	V18CL	V63F	F111T

TABLE 10.4.9B-4b (Cont'd)

Cut Set		Component	
295	V18CL	V71F	F101AA
296	V18CL	V71F	V63F
297	V18CL	V45F	F101AA
298	V18CL	V45F	V63F
299	V18CL	V13CL	F101AA
300	V18CL	V13CL	V63F
301	V50F	V1CL	F101AA
302	V50F	V6CL	F101AA
303	V50F	OE2	F101AA
304	V50F	F111T	F101AA
305	V50F	V63F	V1CL
306	V50F	V63F	V6CL
307	V50F	V63F	OE2
308	V50F	V63F	F111T
309	V50F	V71F	F101AA
310	V50F	V71F	V63F
311	V50F	V45F	F101AA
312	V50F	V45F	V63F
313	V50F	V13CL	F101AA
314	V50F	V13CL	V63F
315	V17CL	V64F	V2CL
316	V49F	V64F	V2CL
317	V48F	V65F	V2CL
318	V48F	V17CL	V2CL
319	V48F	V49F	V2CL
320	V16CL	V65F	V2CL
321	V16CL	V17CL	V2CL
322	V16CL	V49F	V2CL
323	V47F	V1CL	F102BA
324	V47F	V6CL	F102BA
325	V47F	OE2	F102BA
326	V47F	F111T	F102BA
327	V47F	V66F	V1CL
328	V47F	V66F	V6CL
329	V47F	V66F	OE2
330	V47F	V66F	F111T
331	V47F	V71F	F102BA
332	V47F	V71F	V66F
333	V47F	V45F	F102BA
334	V47F	V45F	V66F
335	V47F	V13CL	F102BA
336	V47F	V13CL	V66F

TABLE 10.4.9B-4b (Cont'd)

Cut Set		Component	
337	V47F	V18CL	V1CL
338	V47F	V18CL	V6CL
339	V47F	V18CL	OE2
340	V47F	V18CL	F111T
341	V47F	V18CL	V71F
342	V47F	V18CL	V45F
343	V47F	V18CL	V13CL
344	V47F	V50F	V1CL
345	V47F	V50F	V6CL
346	V47F	V50F	OE2
347	V47F	V50F	F111T
348	V47F	V50F	V71F
349	V47F	V50F	V45F
350	V47F	V50F	V13CL
351	V15F	V1CL	F102BA
352	V15F	V6CL	F102BA
353	V15F	OE2	F102BA
354	V15F	F111T	F102BA
355	V15F	V66F	V1CL
356	V15F	V66F	V6CL
357	V15F	V66F	OE2
358	V15F	V66F	F111T
359	V15F	V71F	F102BA
360	V15F	V71F	V66F
361	V15F	V45F	F102BA
362	V15F	V45F	V66F
363	V15F	V13CL	F102BA
364	V15F	V13CL	V66F
365	V15F	V18CL	V1CL
366	V15F	V18CL	V6CL
367	V15F	V18CL	OE2
368	V15F	V18CL	F111T
369	V15F	V18CL	V71F
370	V15F	V18CL	V45F
371	V15F	V18CL	V13CL
372	V15F	V50F	V1CL
373	V15F	V50F	V6CL
374	V15F	V50F	OE2
375	V15F	V50F	F111T
376	V15F	V50F	V71F
377	V15F	V50F	V45F
378	V15F	V50F	V13CL

TABLE 10.4.9B-4c

CUT SETS - SBLO
MANUAL AUXILIARY FEEDWATER SYSTEM STUDY

Cut Set	Component	
1	V1CL	
2	V6CL	
3	OE2	
4	F111T	
5	OE1	
6	V71F	
7	V45F	
8	V13CL	
9	F103AD	OE3
10	F103AD	F104BD
11	V67F	V68F
12	V52F	V67F
13	V51F	V68F
14	V51F	V52F
15	V64F	V65F
16	V17CL	V64F
17	V49F	V64F
18	V48F	V65F
19	V48F	V17CL
20	V48F	V49F
21	V16CL	V65F
22	V16CL	V17CL
23	V16CL	V49F

TABLE 10.4.9B-5

BASIC EVENT FAILURE RATE DATA

Component Type	Basic Event Numbers	Failure Mode	Probability Per Demand
Manual Valve	1, 2, 5, 6, 7, 8, 9, 10, 12, 13, 14, 15, 16, 17, 18	Plugging	1.0×10^{-4}
		Random Operator Error	3.3×10^{-4}
		Total	4.3×10^{-4}
Check Valve	44, 45, 46, 47, 48, 49, 50, 51, 52	Plugging	1×10^{-4}
Motor Operated Valves	61, 62, 63, 64, 65, 66,67 68,71	Mechanical Comp.	1×10^{-3}
		Plugging	1×10^{-4}
		Control Circuit	6×10^{-3}
		Maintenance	2×10^{-3}
		Total	9.1×10^{-3}
DC Motor Operated Valve (LO)	71A	Plugging	1×10^{-4}
		Maintenance	2×10^{-3}
		Total	2.1×10^{-3}
AC Power Failure	101,102	DG Start Failure	3×10^{-2}
		DG Maintenance	6×10^{-3}
		Total	3.6×10^{-2}
DC Power Failure	103,104	Battery Failure	1×10^{-4}
Motor Driven Pump	110, 112	Mechanical Comp.	1×10^{-3}
		Control Circuit	4×10^{-3}
		Maintenance	2×10^{-3}
		Total	7×10^{-3}
Turbine Driven Pump	111	Mechanical Comp.	1×10^{-3}
		Maintenance	2×10^{-3}
		Total	3×10^{-3}
DC Solenoid Valves	15A, 16B, 17A, 18B	Mechanical Comp.	1×10^{-3}
		Control Circuit	6×10^{-3}
		Maintenance	2×10^{-3}
		Total	9×10^{-3}

TABLE 10.4.9B-5 (Cont'd)

Component Type	Basic Event Numbers	Failure Mode	Probability Per Demand
Automatic Actuation Logic	105, 106	Total	7×10^{-3}*
Manual System Start	OE1	Operator Error	5×10^{-3}
Turbine Pump Manual Start	OE2	Operator Error	1×10^{-2}
AB dc Bus Manual Switchover	OE3	Operator Error	3×10^{-2}
Motor Driven Pump Disch Manual Crossover	OE4	Operator Error	5×10^{-2}
System Auto Start Manual Backup	OE5	Operator Error	1×10^{-2}

*Failure probabilities assumed for actuating logic are those of NUREG 0635. This provides results comparable with other evaluations. Reliability studies by the actuation logic vendor have shown a significantly higher reliability verifying the conservatism of this assumption.

TABLE 10.4.9B-6

AFS VALVES SUBJECT TO ASME SECTION XI TESTING

Power Operated Valves		Check Valves	
61	I-MV-09-13	44	2I-V9107 (350)
62	I-MV-09-14	45	2I-V9139 (351)
63	I-MV-09-9	46	2I-V9123 (350)
64	I-MV-09-11	47	2I-V9119 (350)
65	I-MV-09-12	48	2I-V9151 (350)
66	I-MV-09-10	49	2I-V9157 (350)
67	I-MV-08-13	50	2I-V9135 (350)
68	I-MV-08-12	51	2I-V8130 (350)
71	I-MV-08-3	52	2I-V8163 (350)
15A	I-SE-09-2		
16B	I-SE-09-4		
17A	I-SE-09-5		
18B	I-SE-09-3		
69	I-SE-08-2		
70	I-SE-08-1		

TABLE 10.4.9B-7a

DOMINANT CUT SETS - LOFW (AUTOMATIC)

PROBABILITY: 6.21×10^{-6}

Cut Set	Event	Probability (10^{-7})	% Probability
2	V2CL, V71A	9.03	14.54
3	V2CL, V6CL	1.85	2.97
4	V2CL, V1CL	1.85	2.97
5	V2CL, F111T	12.9	20.77
6	V2CL, V13CL	1.85	2.97
8	F105, F106, OE5	4.9	7.89
13	V71A, V15A, V66F	1.72	2.77
14	V71A, V15A, V18B	1.70	2.74
19	V71A, V63F, V66F	1.74	2.80
20	V71A, V63F, V18B	1.72	2.77
26	V71A, F110MA, F112MB	1.03	1.66
83	F111T, V15A, V66F	2.46	3.95
84	F111T, V15A, V18B	2.43	3.91
89	F111T, V63F, V66F	2.48	4.0
90	F111T, V63F, V18B	2.46	3.95
94	F111T, F110MA, F112MB	1.47	2.37
TOTAL		51.6	83.05

TABLE 10.4.9B-7b

DOMINANT CUT SETS - LOOP (AUTOMATIC)

PROBABILITY: 1.90×10^{-5}

Cut Set	Event	Probability (10^{-7})	% Probability
2	V2CL, V71A	9.03	4.75
5	V2CL, F111T	12.9	6.78
18	V71A, V15A, F102BA	6.80	3.58
21	V71A, F101AA, V66F	6.88	3.62
23	V71A, F101AA, V18B	6.80	3.58
30	V71A, V63F, F102BA	6.88	3.62
35	V71A, F112MB, F101AA	5.29	2.78
39	V71A, F110MA, F102BA	5.29	2.78
130	F111T, V15A, F102BA	9.72	5.11
133	F111T, F101AA, V66F	9.83	5.17
135	F111T, F101AA, V18B	9.72	5.11
142	F111T, V63F, F102BA	9.83	5.11
147	F111T, F112MB, F101AA	7.56	3.98
149	F111T, F110,MA, F102BA	7.56	3.98
TOTAL		114.10	60.01

TABLE I0.4.9B-7c

DOMINANT CUT SETS - SB (AUTOMATIC)

PROBABILITY: 6.91 x 10^{-3}

Cut Set	Event	Probability (10^{-3})	% Probability
1	V71A	2.1	30.37
2	V1CL	.43	6.22
3	V6CL	.43	6.22
4	F111T	3.0	43.38
5	V45F	.1	1.45
6	V13CL	.43	6.22
		~6.49	93.86

TABLE 10.4.9B-8a

DOMINANT CUT SETS - LOFW (MANUAL)

PROBABILITY: 5.01 x 10^{-3}

Cut Set	Event	Probability (10^{-7})	% Probability
1	OE1	50000	99.72
3	V2CL, V1CL	1.85	.0037
4	V2CL, V6CL	1.85	.0037
5	V2CL, OE2	43	.086
6	V2CL, F111T	12.9	.026
7	V2CL, V71F	39.13	.078
9	V2CL, V13CL	1.85	.0037
18	OE2, F110MA, F112MB	4.9	.0098
21	F111T, F110MA, F112MB	1.47	.0029
25	V63F, V66F, OE2	8.28	.0165
26	V63F, V66F, F111T	2.48	.0050
28	V71F, F110MA, F112MB	4.46	.0089
30	V71F, V63F, V66F	7.54	.0150
		~50129./	99.98

TABLE 10.4.9B-8b

DOMINANT CUT SETS - LOOP (MANUAL)

PROBABILITY: 5.0×10^{-3}

Cut Set	Event	Probability (10^{-6})	% Probability
1	OE1	5000	99.10
5	V2CL, OE2	4.3	.085
6	V2CL, F111T	1.29	.025
7	V2CL, V71F	3.91	.077
30	OE2, F112MB, F101AA	2.52	.05
32	OE2, F110MA, F102BA	2.52	.05
46	V66F, OE2, F101AA	3.28	.065
50	V63F, OE2, F102BA	3.28	.065
58	V71F, F112MB, F101AA	2.29	.045
60	V71F, F110MA, F102BA	2.29	.045
64	V71F, V66F, F101AA	2.98	.059
65	V71F, V63F, F102BA	2.98	.059
		~5031.6	99.73

TABLE 10.4.9B-8c

DOMINANT CUT SETS - SB (MANUAL)

PROBABILITY: 2.8×10^{-2}

Cut Set	Event	Probability (10^{-3})	% Probability
3	OE2	10	35.25
4	F111T	3	10.57
5	OE1	5	17.62
6	V71F	9.1	32.08
		~27.1	95.53

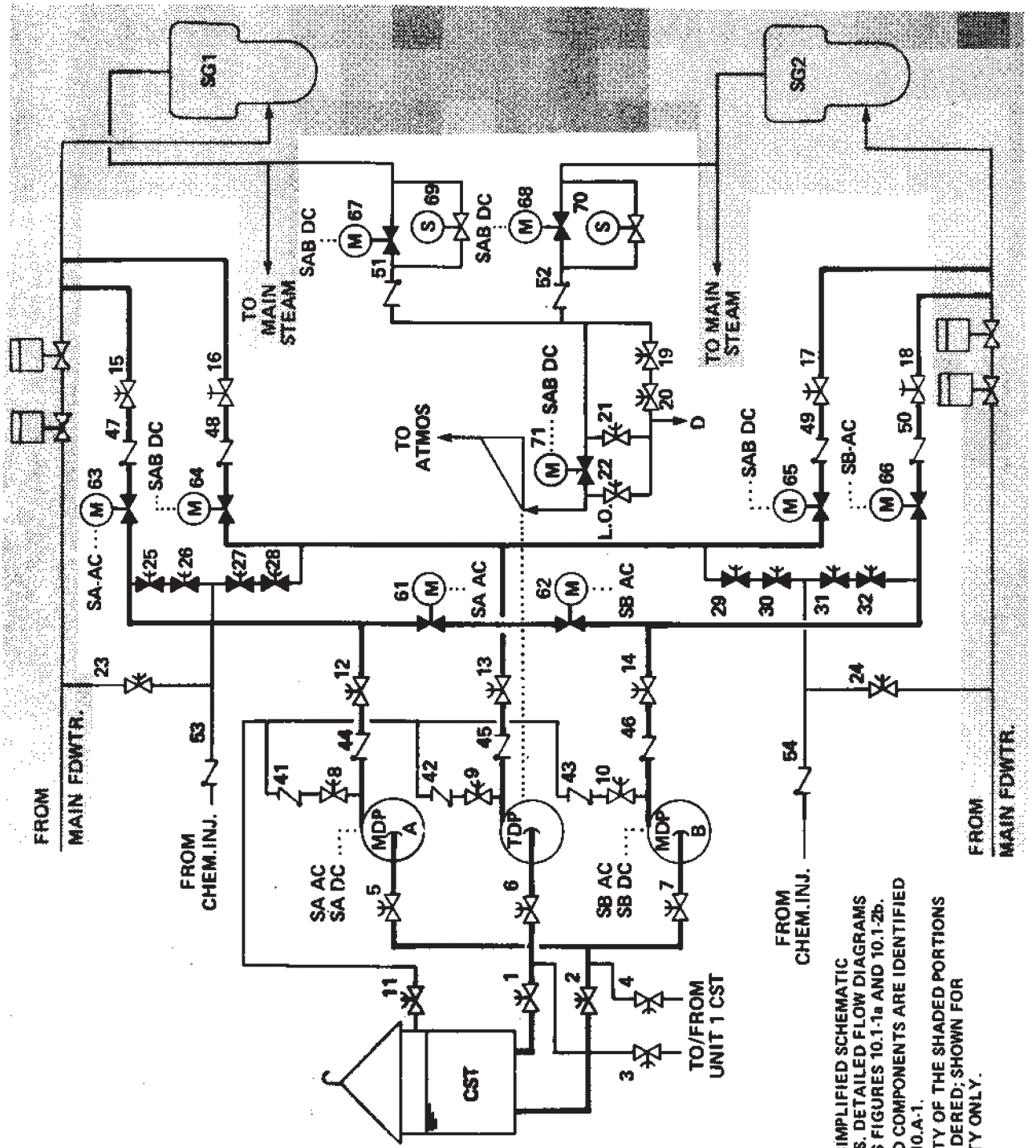

NOTES:
1. THIS IS A SIMPLIFIED SCHEMATIC OF THE AFS. DETAILED FLOW DIAGRAMS APPEAR AS FIGURES 10.1-1a AND 10.1-2b.
2. NUMBERED COMPONENTS ARE IDENTIFIED IN TABLE 10.A-1.
3. RELIABILITY OF THE SHADED PORTIONS NOT CONSIDERED; SHOWN FOR CONTINUITY ONLY.

FLORIDA POWER & LIGHT COMPANY
ST. LUCIE PLANT UNIT 2

AFS SCHEMATIC DIAGRAM
MANUAL DESIGN

FIGURE 10.4.9B-1

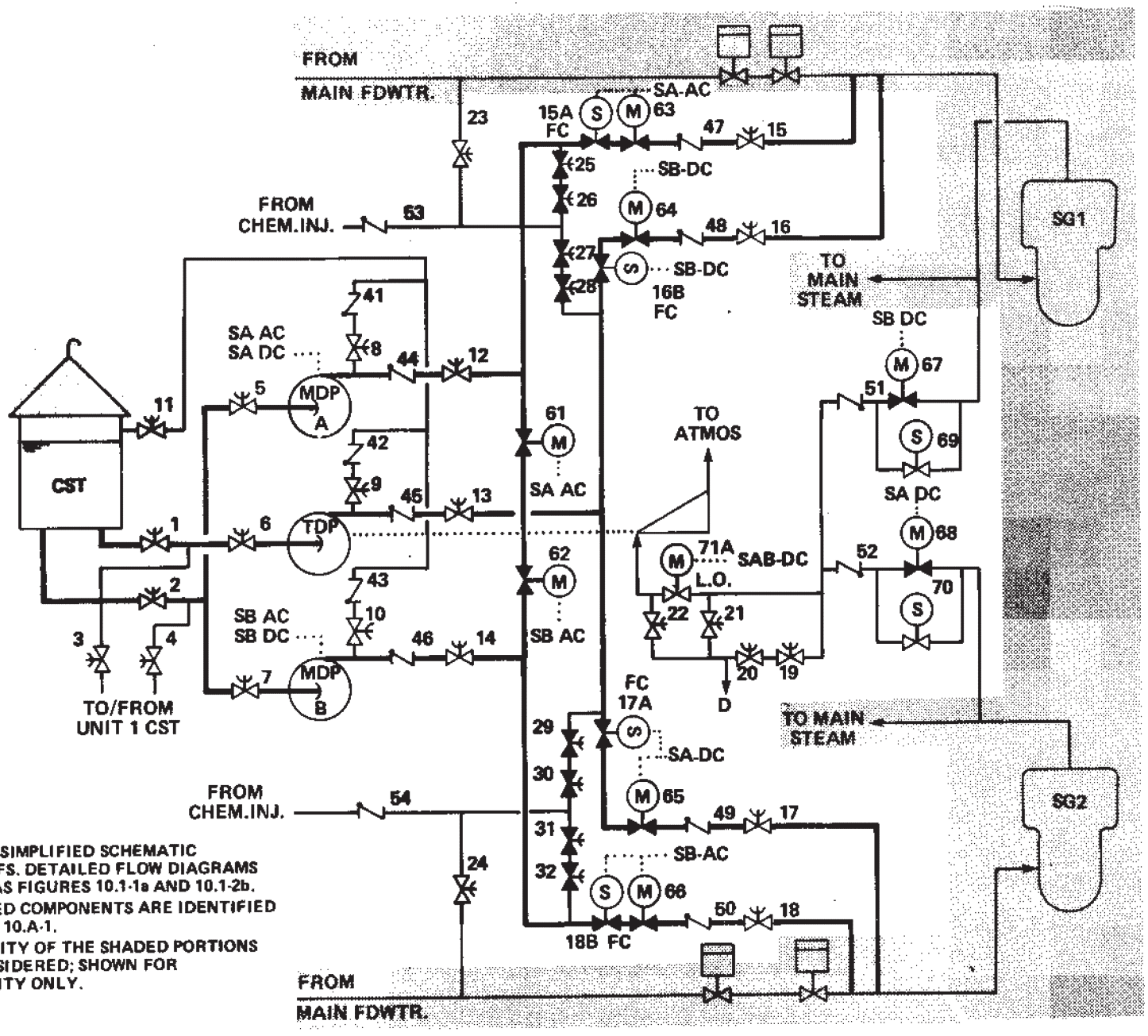

NOTES:

1. THIS IS A SIMPLIFIED SCHEMATIC OF THE AFS. DETAILED FLOW DIAGRAMS APPEAR AS FIGURES 10.1-1a AND 10.1-2b.
2. NUMBERED COMPONENTS ARE IDENTIFIED IN TABLE 10.A-1.
3. RELIABILITY OF THE SHADED PORTIONS NOT CONSIDERED; SHOWN FOR CONTINUITY ONLY.

FLORIDA POWER & LIGHT COMPANY
ST. LUCIE PLANT UNIT 2

AFS SCHEMATIC DIAGRAM
AUTOMATIC DESIGN

FIGURE 10.4.9B-2

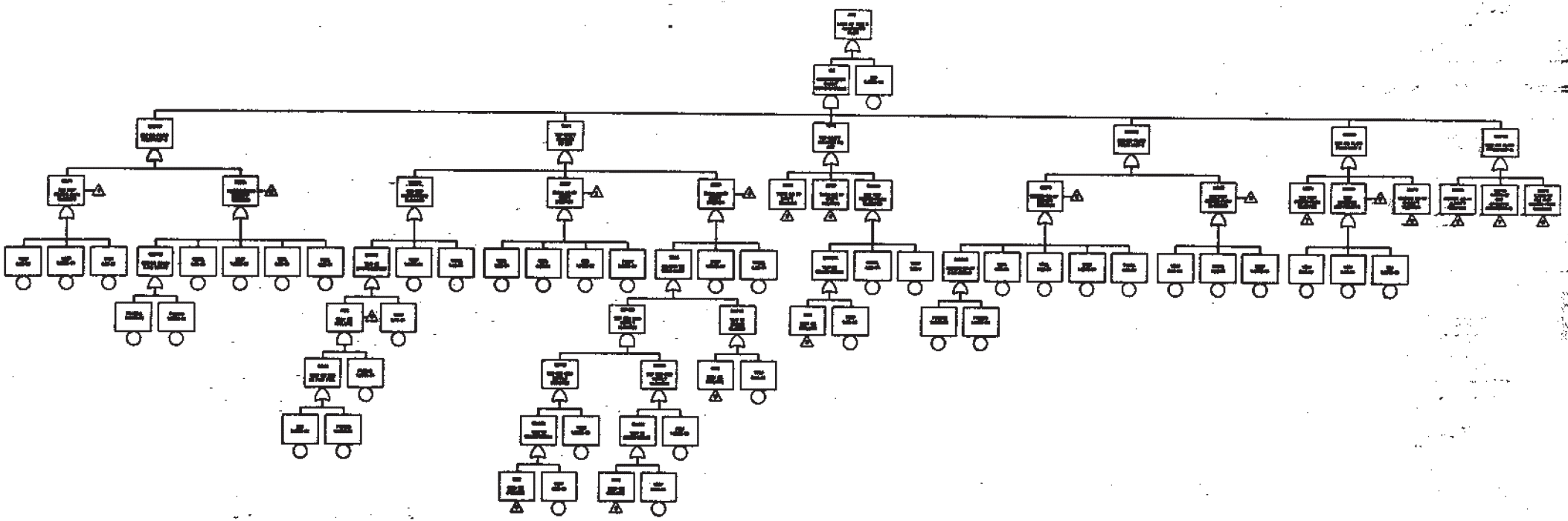

FLORIDA POWER & LIGHT COMPANY
ST. LUCIE PLANT UNIT 2

FAULT TREE OF LOFW - MANUAL
FIGURE 10.4.9B-3

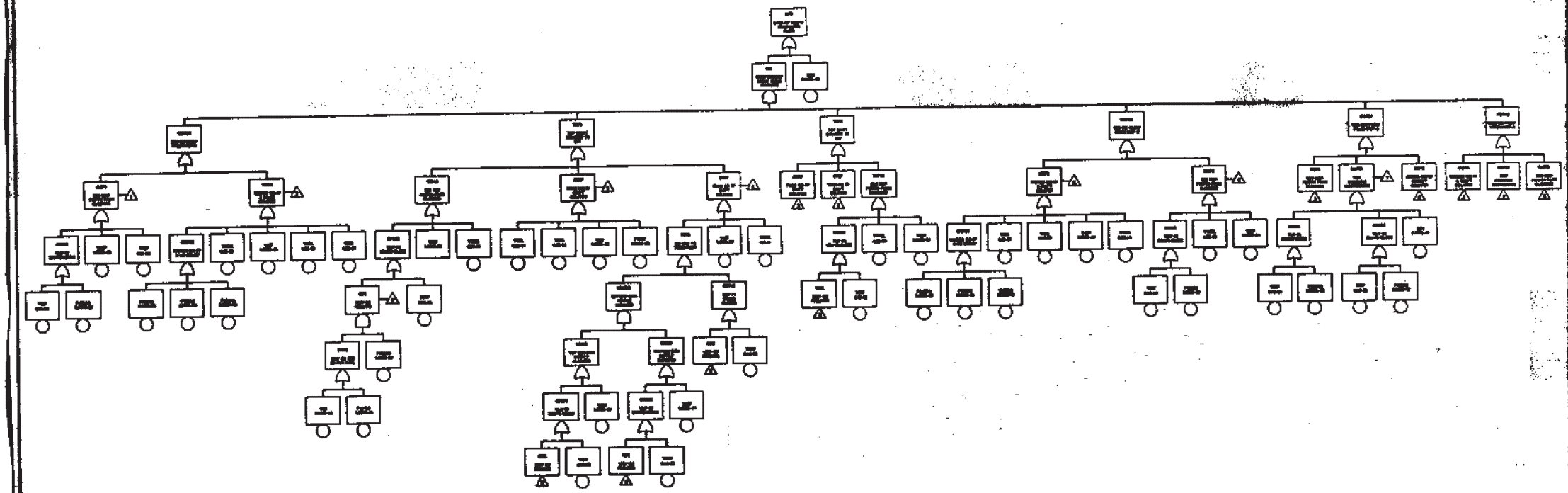

FLORIDA POWER & LIGHT COMPANY
ST. LUCIE PLANT UNIT 2

FAULT TREE OF LOOP - MANUAL
FIGURE 10.4.10-4

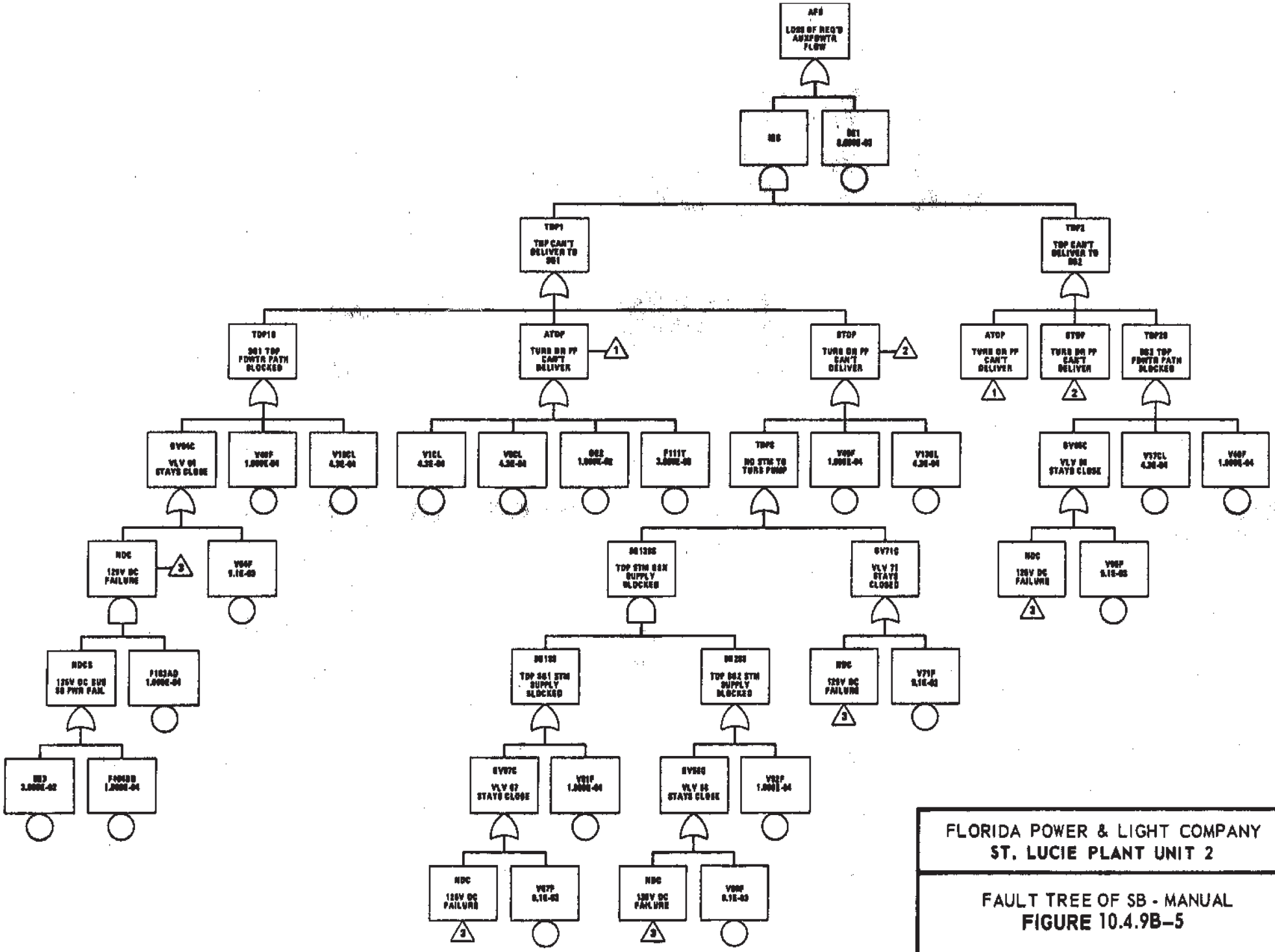

FLORIDA POWER & LIGHT COMPANY
ST. LUCIE PLANT UNIT 2

FAULT TREE OF SB - MANUAL
FIGURE 10.4.9B–5

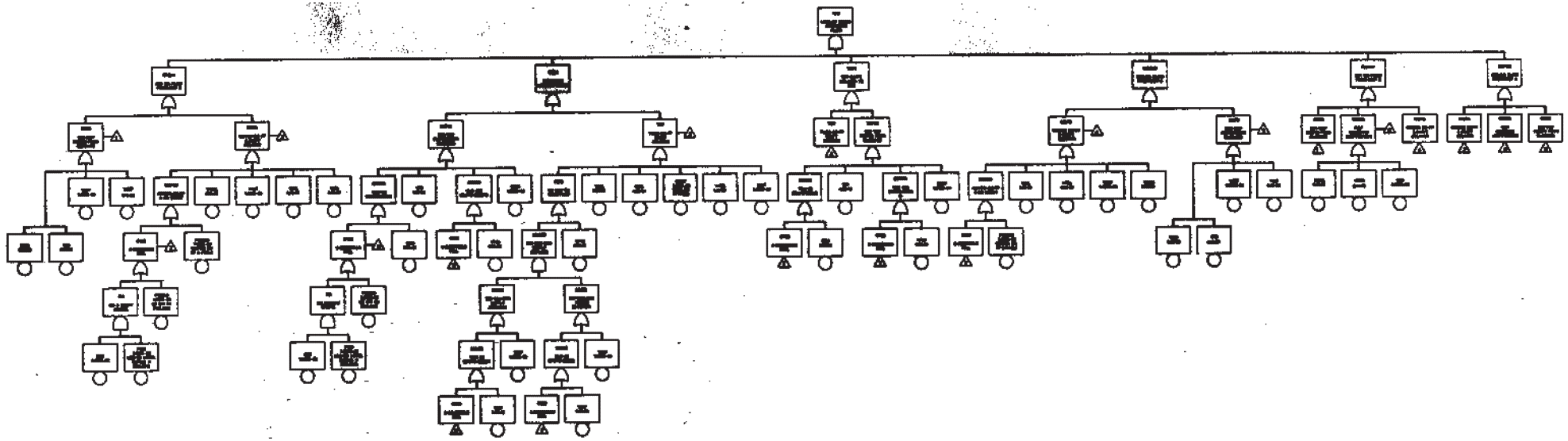

FLORIDA POWER & LIGHT COMPANY
ST. LUCIE PLANT UNIT 2

FAULT TREE OF LOFW - AUTOMATIC
FIGURE 10.4.98-6

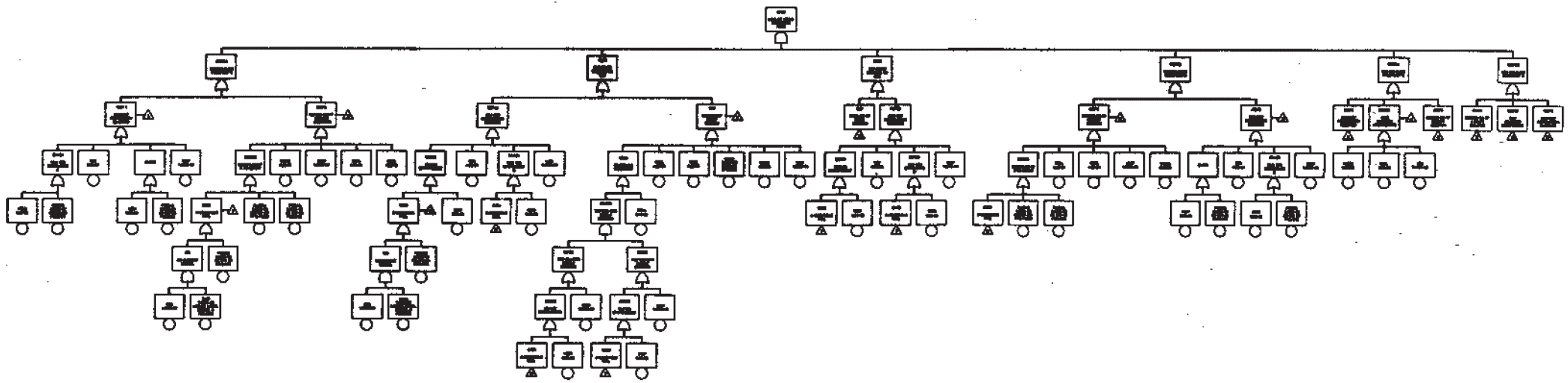

FLORIDA POWER & LIGHT COMPANY
ST. LUCIE PLANT UNIT 2

FAULT TREE OF LOOP - AUTOMATIC
FIGURE 10.4.9B-7

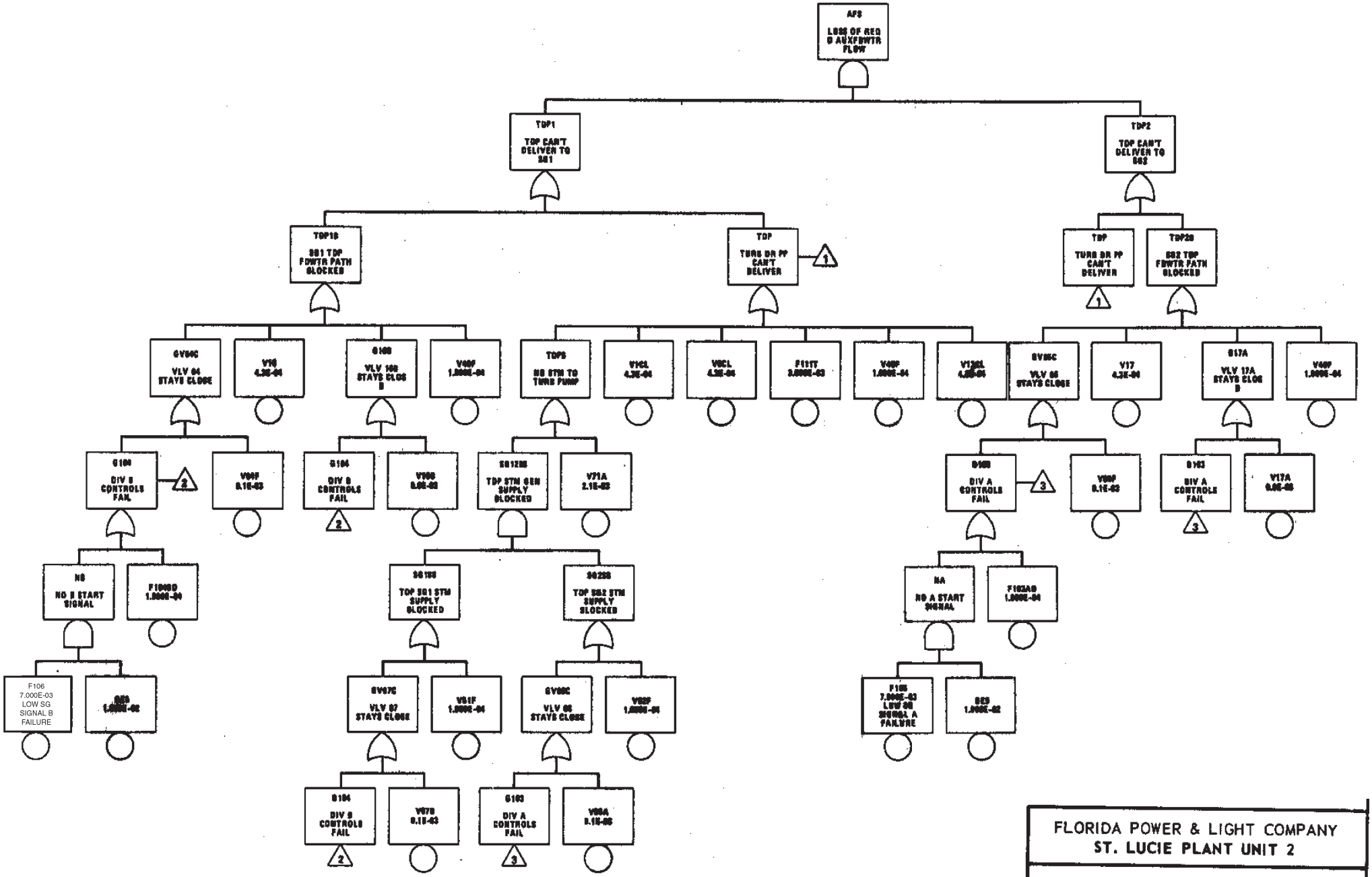

FLORIDA POWER & LIGHT COMPANY
ST. LUCIE PLANT UNIT 2

FAULT TREE OF SB - AUTOMATIC
FIGURE 10.4.9B–8