AUXILIARY SYSTEMS

CHAPTER 9

TABLE OF CONTENTS

Section	Title	Page
9.0	AUXILIARY SYSTEMS	9.1-1
9.1	FUEL STORAGE AND HANDLING	9.1-1
9.1.1	NEW FUEL STORAGE	9.1-1
9.1.2	SPENT FUEL STORAGE	9.1-2
9.1.3	FUEL POOL COOLING AND PURIFICATION SYSTEM	9.1-16
9.1.4	FUEL HANDLING SYSTEM	9.1-25
	REFERENCES	9.1-46
9.2	WATER SYSTEMS	9.2-1
9.2.1	INTAKE COOLING WATER SYSTEM	9.2-1
9.2.2	COMPONENT COOLING WATER SYSTEM	9.2-6
9.2.3	PRIMARY MAKEUP AND DEMINERALIZED WATER SYSTEMS	9.2-12
9.2.4	SERVICE AND POTABLE WATER SYSTEM	9.2-14
9.2.5	ULTIMATE HEAT SINK	9.2-15
9.2.6	CONDENSATE STORAGE TANK	9.2-15
9.2.7	TURBINE COOLING WATER SYSTEM	9.2-17
	REFERENCES	9.2-20
9.3	PROCESS AUXILIARIES	9.3-1
9.3.1	COMPRESSED AIR SYSTEMS	9.3-1
9.3.2	PROCESS SAMPLING SYSTEM	9.3-4
9.3.3	EQUIPMENT AND FLOOR DRAINAGE SYSTEMS	9.3-11
9.3.4	CHEMICAL AND VOLUME CONTROL SYSTEM	9.3-15
9.3.5	ESF LEAKAGE COLLECTION AND RETURN SYSTEM	9.3-48
9.3.6	POST-ACCIDENT SAMPLING SYSTEM	9.3-49
9.3.7	REACTOR COOLANT GAS VENT SYSTEM	9.3-56
	REFERENCES	9.3-62

Section	Title	Page
9.4	AIR CONDITIONING, HEATING, COOLING AND VENTILATION SYSTEM	9.4-1
9.4.1	CONTROL ROOM AIR CONDITIONING SYSTEM AND CONTROL ROOM EMERGENCY CLEANUP SYSTEM	9.4-1
9.4.2	FUEL HANDLING BUILDING VENTILATION SYSTEM	9.4-7
9.4.3	REACTOR AUXILIARY BUILDING VENTILATION SYSTEMS	9.4-10
9.4.4	TURBINE BUILDING VENTILATION SYSTEM	9.4-17
9.4.5	DIESEL GENERATOR BUILDING VENTILATION SYSTEM	9.4-18
9.4.6	INTAKE STRUCTURE VENTILATION SYSTEM	9.4-19
9.4.7	COMPONENT COOLING AREA VENTILATION SYSTEM	9.4-20
9.4.8	REACTOR BUILDING VENTILATION SYSTEMS	9.4-21
9.5	OTHER AUXILIARY SYSTEMS	9.5-1
9.5.1	FIRE PROTECTION PROGRAM	9.5-1
9.5.2	COMMUNICATIONS SYSTEMS	9.5-5
9.5.3	LIGHTING SYSTEMS	9.5-10
9.5.4	DIESEL GENERATOR FUEL OIL STORAGE AND TRANSFER SYSTEM	9.5-12
9.5.5	DIESEL GENERATOR COOLING WATER SYSTEM	9.5-17
9.5.6	DIESEL GENERATOR AIR STARTING SYSTEM	9.5-21
9.5.7	DIESEL GENERATOR LUBRICATING SYSTEM	9.5-24
9.5.8	DIESEL GENERATOR COMBUSTION AIR INTAKE AND EXHAUST SYSTEM	9.5-29
	REFERENCES	9.5-32
9.6	CRANES - OVERHEAD HEAVY LOADS HANDLING SYSTEMS	9.6-1
9.6.1	NUREG-0612, "CONTROL OF HEAVY LOADS AT NUCLEAR PLANTS"	9.6-1
9.6.2	SYSTEMS SUBJECT TO NUREG-0612	9.6-1
9.6.3	IMPLEMENTATION OF NUREG-0612 GUIDELINES	9.6-1
	REFERENCES	9.6-3

AUXILIARY SYSTEMS

CHAPTER 9

LIST OF TABLES

Table	Title	Page
9.1-1	NEW FUEL STORAGE RACKS	T9.1-1
9.1-2	ASSUMPTIONS FOR CRITICALITY ANALYSIS FOR NEW FUEL RACKS	T9.1-2
9.1-3	ASSUMPTIONS FOR SPENT FUEL RACK CRITICALITY ANALYSIS	T9.1-3
9.1-3a	LIST OF LIGHT LOADS THAT MAY BE LIFTED OVER THE SPENT FUEL POOL	T9.1-4
9.1-3b	SUMMARY OF THE CRITICALITY SAFETY ANALYSIS FOR CASE 1	T9.1-5
9.1-3c	SUMMARY OF THE CRITICALITY SAFETY ANALYSIS FOR CASE 2	T9.1-6
9.1-3d	EXAMPLE OF BURNUP VERSUS ENRICHMENT REQUIREMENT FOR CASE 3	T9.1-7
9.1-3e	EXAMPLE OF BURNUP VERSUS ENRICHMENT REQUIREMENT FOR CASE 4	T9.1-8
9.1-3f	EXAMPLE OF BURNUP VERSUS ENRICHMENT REQUIREMENT FOR CASE 5	T9.1-9
9.1-3g	EXAMPLE OF BURNUP VERSUS ENRICHMENT REQUIREMENT FOR CASE 6	T9.1-10
9.1-3h	EXAMPLE OF BURNUP VERSUS ENRICHMENT REQUIREMENT FOR CASE 7	T9.1-11
9.1-3i	EXAMPLE OF BURNUP VERSUS ENRICHMENT REQUIREMENT FOR CASE 8	T9.1-12
9.1-3j	EXAMPLE OF BURNUP VERSUS ENRICHMENT REQUIREMENT FOR CASE 9	T9.1-13
9.1-3k	EXAMPLE OF BURNUP VERSUS ENRICHMENT REQUIREMENT FOR CASE 10	T9.1-14
9.1-3l	SUMMARY OF ACCIDENT CONDITIONS	T9.1-15
9.1-4	REFUELING CAVITY AND SPENT FUEL POOL WATER CHEMISTRY	T9.1-16
9.1-5	SPENT FUEL POOL PROCESS FLOW DATA	T9.1-17
9.1-6	PRINCIPAL COMPONENT DESIGNS DATA SUMMARY	T9.1-18
9.1-7	FUEL POOL SYSTEM INSTRUMENTATION	T9.1-24

Table	Title	Page
9.1-8	DELETED	T9.1-25
9.1-8a	CALCULATED PEAK SFP BULK TEMPERATURE RESULTS	T9.1-26
9.1-9	FAILURE MODES AND EFFECTS ANALYSIS	T9.1-27
9.1-10	MAJOR TOOLS AND SERVICING EQUIPMENT REQUIRED FOR REFUELING FUNCTIONS	T9.1-29
9.1-11	FUEL HANDLING SYSTEM – CODES AND STANDARDS	T9.1-30
9.1-12	DELETED	T9.1-32
9.1-13	CONTAINMENT POLAR CRANE DESIGN DATA	T9.1-33
9.2-1	DESIGN DATA FOR INTAKE COOLING WATER SYSTEM	T9.2-1
9.2-2	FAILURE MODES & EFFECTS ANALYSIS INTAKE COOLING WATER SYSTEM	T9.2-4
9.2-3	INTAKE COOLING WATER SYSTEM INSTRUMENTATION APPLICATION	T9.2-6
9.2-4	DESIGN DATA FOR COMPONENT COOLING SYSTEM COMPONENTS	T9.2-8
9.2-5	DESIGN FLOW RATES AND HEAT LOADS FOR ALL AUXILIARY EQUIPMENT COOLED BY COMPONENT COOLING SYSTEM	T9.2-11
9.2-6	FAILURE MODES AND EFFECTS ANALYSIS - COMPONENT COOLING WATER SYSTEM	T9.2-12
9.2-7	COMPONENT COOLING WATER SYSTEM INSTRUMENTATION APPLICATION	T9.2-14
9.2-8	DESIGN DATA FOR PRIMARY MAKEUP WATER SYSTEM COMPONENTS	T9.2-17
9.2-9	PRIMARY MAKEUP WATER SYSTEM INSTRUMENTATION APPLICATION	T9.2-18
9.2-10	DELETED	T9.2-19
9.2-11	DESIGN DATA FOR CONDENSATE STORAGE TANK	T9.2-20
9.2-12	DESIGN DATA FOR TURBINE COOLING WATER SYSTEM COMPONENTS	T9.2-21
9.2-13	TURBINE PLANT COMPONENTS OPERATING FLOW RATES AND CALCULATED HEAT LOADS	T9.2-23
9.2-14	TURBINE COOLING WATER SYSTEM INSTRUMENTATION APPLICATIONS	T9.2-24

EC291265

Table	Title	Page
9.3-1	DESIGN DATA FOR COMPRESSED AIR SYSTEM COMPONENTS	T9.3-1
9.3-2	COMPRESSED AIR SYSTEM INSTRUMENT APPLICATION	T9.3-3
9.3-3	PRIMARY SAMPLING SYSTEM FLOW RATES	T9.3-5
9.3-4	DESIGN DATA FOR PRIMARY SAMPLING SYSTEM COMPONENTS	T9.3-6
9.3-4a	PRIMARY SAMPLING SYSTEM LOCAL INSTRUMENTATION	T9.3-9
9.3-5	REACTOR COOLANT AND PRIMARY WATER CHEMISTRY	T9.3-10
9.3-6	PRINCIPAL COMPONENT DESIGN DATA SUMMARY	T9.3-11
9.3-7	CHEMICAL AND VOLUME CONTROL SYSTEM PROCESS PARAMETERS	T9.3-19
9.3-8	CHEMICAL AND VOLUME CONTROL SYSTEM PROCESS FLOW DATA	T9.3-20
9.3-9	FAILURE MODES AND EFFECTS ANALYSIS - CHEMICAL VOLUME CONTROL SYSTEM	T9.3-23
9.3-10	DESIGN DATA FOR ESF LEAKAGE COLLECTION AND RETURN SYSTEM	T9.3-41
9.3-10a	POST-ACCIDENT SAMPLING SYSTEM FLOW RATES	T9.3-42
9.3-10b	DESIGN DATA FOR POST-ACCIDENT SAMPLING SYSTEM C0MPONENTS	T9.3-43
9.3-10c	DESIGN DATA FOR POST-ACCIDENT SAMPLING SYSTEM PROCESS INSTRUMENTS	T9.3-46
9.3-10d	INSTRUMENT CALIBRATION FREQUENCY	T9.3-47
9.3-11	RCGVS SEISMIC CATEGORY I VALVE LIST	T9.3-48
9.3-12	FAILURE MODES EFFECTS ANALYSIS FOR THE REACTOR COOLANT GAS VENT SYSTEM	T9.3-49
9.4-1	DESIGN DATA FOR THE CONTROL ROOM AIR CONDITIONING SYSTEM COMPONENTS	T9.4-1
9.4-2	DESIGN DATA FOR THE CONTROL ROOM EMERGENCY CLEANUP SYSTEM COMPONENTS	T9.4-4
9.4-3	CONTROL ROOM AIR CONDITIONING SYSTEM AND CONTROL ROOM EMERGENCY CLEANUP SYSTEM FAILURE MODES AND EFFECTS ANALYSIS	T9.4-8
9.4-4	CONTROL ROOM VENTILATION SYSTEM INSTRUMENTATION APPLICATION	T9.4-10

Table	Title	Page
9.4-5	DESIGN DATA FOR FUEL HANDLING BUILDING VENTILATION SYSTEM	T9.4-12
9.4-6	DESIGN DATA FOR REACTOR AUXILIARY BUILDING VENTILATION SYSTEM COMPONENTS	T9.4-15
9.4-7	DESIGN DATA FOR ECCS AREA VENTILATION SYSTEM COMPONENTS (HVE-9A & 9B)	T9.4-21
9.4-8	RAB HVAC COMPONENTS WITH SIAS, INTERLOCKS OR MANUAL CONTROLS	T9.4-22
9.4-9	ECCS AREA VENTILATION SYSTEM FAILURE MODES & EFFECTS ANALYSIS	T9.4-25
9.4-10	REACTOR AUXILLARY BUILDING VENTILATION SYSTEM INSTRUMENT APPLICATIONS	T9.4-26
9.4-11	TURBINE BUILDING VENTILATION SYSTEM COMPONENT DESIGN DATA	T9.4-31
9.4-12	DIESEL GENERATOR BUILDING INTAKE, STRUCTURE AND COMPONENT COOLING AREA VENTILATION SYSTEMS COMPONENT DESIGN DATA	T9.4-32
9.4-13	DESIGN DATA FOR CONTAINMENT PURGE SYSTEM COMPONENTS (HVE-8A AND 8B)	T9.4-33
9.4-14	DESIGN DATA FOR REACTOR SUPPORT, REACTOR CAVITY AND CEDM COOLING SYSTEM	T9.4-35
9.4-15	DESIGN DATA FOR CONTINUOUS CONTAINMENT PURGE/ HYDROGEN PURGE SYSTEM COMPONENTS (HVE-7A & 7B)	T9.4-37
9.4-16	COMPARISON OF NORMAL VENTILATION FILTRATION SYSTEMS WITH REGULATORY POSITIONS OF REGULATORY GUIDE 1.140 (R1)	T9.4-40
9.5-1	DESIGN DATA FOR DIESEL GENERATOR FUEL OIL SYSTEM	T9.5-1
9.5-2	DIESEL GENERATOR FUEL OIL SYSTEM INSTRUMENTATION APPLICATION	T9.5-3
9.5-3	DESIGN DATA FOR DIESEL ENGINE COOLING WATER SYSTEM COMPONENTS	T9.5-4
9.5-4	DESIGN DATA DIESEL GENERATOR STARTING SYSTEM COMPONENTS	T9.5-6
9.5-5	DESIGN DATA FOR DIESEL GENERATOR LUBE OIL SYSTEM COMPONENTS	T9.5-7

Table	Title	Page
9.5-6	SUMMARY OF ONSITE COMMUNICATION SYSTEMS CAPABILITIES AND NOISE CONSIDERATION DURING TRANSIENTS AND/OR ACCIDENTS	T9.5-9
9.6-1	NUREG-0612 UNIT 2 COMPLIANCE MATRIX	T9.6-1

AUXILIARY SYSTEMS

CHAPTER 9

LIST OF FIGURES

Figure	Title
9.1-1	Fuel Handling Building New Fuel Storage Racks
9.1-2	Typical Spent Fuel Storage Rack Module
9.1-2a	Region II Fuel Storage Rack - Cask Pit Rack (Typical)
9.1-2b	Fuel Storage Rack Platform - Cask Pit Rack (Typical)
9.1-3a	Typical Spent Fuel Storage Rack Module L-Insert
9.1-3b	L-Inserts
9.1-4	Spent Fuel Storage Module
9.1-5	Max. Cap. Spent Fuel Storage Module Installation
9.1-5a	Typical Spent Fuel Rack Module For Region I
9.1-5b	Typical Spent Fuel Rack Module For Region II
9.1-6	Flow Diagram Fuel Pool System
9.1-7	Fuel Handling Equipment Arrangement
9.1-7a	Flow Diagram Spent Fuel System
9.1-8	Refueling Machine
9.1-10	Fuel Handling Tools
9.1-11	Reactor Vessel Head Lift Rig
9.1-12	Core Support Barrel Lift Rig
9.1-13	Upper Guide Structure Lift Rig
9.1-14	Spent Fuel Handling Machine
9.1-15	New Fuel Elevator - General Arrangement
9.1-19	Hydraulic Power Unit
9.1-20	Permanent Reactor Cavity Seal Ring
9.1-21	Deleted EC291265
9.2-1	Flow Diagram Circulating and Intake Cooling Water System
9.2-2	Flow Diagram Component Cooling System

Figure	Title
9.2-3	Component Cooling Water Pump 2C Pump - Valve Alignment Annunciation
9.2-4	Flow Diagram Domestic & Make-up Water Systems
9.2-5	Deleted
9.2-6	Deleted
9.2-7	Flow Diagram Miscellaneous Systems
9.2-9	Flow Diagram Turbine Cooling Water System
9.2-10	Flow Diagram Turbine Cooling Water System
9.3-1	Flow Diagram Service Air System
9.3-2	Flow Diagram Instrument Air System
9.3-2a	Flow Diagram Instrument Air System
9.3-3	Flow Diagram Sampling System
9.3-3a	Flow Diagram Sampling System
9.3-3b	Flow Diagram Sampling System
9.3-4	Flow Diagram Miscellaneous Sampling Systems
9.3-4a	Secondary Sampling System
9.3-5a	Flow Diagram Chemical and Volume Control System
9.3-5b	Flow Diagram Chemical and Volume Control System
9.3-5c	Flow Diagram Chemical and Volume Control System
9.3-6	Flow Diagram Waste Management System
9.3-6a	Flow Diagram Sampling System
9.3-7	Deleted
9.3-8	Boric Acid Solubility
9.4-1	HVAC - Air Flow Diagram
9.4-2	HVAC - Control Diagrams - Sheet 2
9.4-3	Deleted
9.4-4	Deleted
9.4-5	Deleted
9.4-6a	Deleted
9.4-6b	Deleted

Figure	Title
9.4-7	Deleted
9.4-8	Deleted
9.4-9	HVAC - Control Diagrams - Sheet 1
9.4-10	Deleted
9.4-11	HVAC - Control Diagrams - Sheet 3
9.5-1	Page/Party System Block Diagram
9.5-2	Deleted
9.5-3	Sound Powered System Block Diagram
9.5-4	Deleted
9.5-5	Deleted
9.5-6	Flow Diagram Miscellaneous Systems
9.5-7	Flow Diagram Emergency Diesel Generator System Diesel Engine 2A1
9.5-8	Flow Diagram Emergency Diesel Generator System Diesel Engine 2B2
9.5-9	Deleted
9.5-10	Deleted
9.5-11	Air Intake Piping Schematic
9.5-12	Schematic Diagram Exhaust System Piping

9.0 AUXILIARY SYSTEMS

9.1 FUEL STORAGE AND HANDLING

Note: Dry storage of spent fuel, pursuant to 10 CFR 72, is provided as discussed in Section 1.2.2.9. The following sections relate to fuel storage and handling under 10 CFR 50.

9.1.1 NEW FUEL STORAGE

9.1.1.1 Design Bases

The new fuel storage racks are designed to:

a. store 80 16 x 16 fuel assemblies containing fuel of up to 4.6 weight percent nominal planar average enrichment,

b. provide sufficient spacing between the fuel assemblies to maintain a subcritical ($K_{eff} \leq 0.98$) array assuming the most reactive condition.

c. maintain a subcritical ($K_{eff} \leq 0.98$) array under all design loadings including the safe shutdown earthquake (SSE).

d. preclude the insertion of a new fuel assembly being placed between cavities, and

e. maintain a subcritical array with the assumption of b) and c), under all design loadings, including the safe shutdown earthquake displacements.

Additionally, in December of 1998 St. Lucie Unit 2 elected to comply with the requirements of 10 CFR 50.68(b), which includes restrictions on the reactivity of stored fresh (i.e., new) fuel.

9.1.1.2 System Description

The location of the new fuel storage racks is shown in the Fuel Handling Building general arrangement drawings, Figures 1.2-16 and 1.2-17. The new fuel storage racks are shown on Figure 9.1-1.

The method of transferring new fuel into the Fuel Handling Building and placing it into the new fuel storage racks is discussed in Subsection 9.1.4.

New fuel is stored dry at floor elevation 48 feet with the top of the rack at elevation 62.5 feet. The rack elevation precludes the possibility of flooding resulting from the probable maximum hurricane.

The new fuel storage racks consist of 80 square cavities fixed together in two 4 by 10 arrays. The design data for the racks is listed in Table 9.1-1. Provisions are made for the future storage of 16 additional fuel assemblies. Each storage cavity is fabricated from four stainless steel angles connected by horizontal ties and each can contain one new fuel assembly. Each cavity is provided with a hinged checkered plate cover.

The new fuel is subjected to an ambient temperature of 104°F with an outside ambient temperature of 93°F. The Fuel Handling Building Ventilation System is described in Subsection 9.4.2.

During the initial core loading, up to 256 new fuel assemblies with U-235 enrichments of up to 2.8 w/o can be stored dry in the spent fuel racks.

9.1.1.3 System Evaluation

New fuel in the storage racks has been analyzed for uranium enrichments up to 4.6 weight percent and with consideration of a full range of moderator (non borated water) densities from mist to full immersion. The fuel array is maintained subcritical by at least 2.0 percent over this full range of conditions. Assumptions for the criticality analysis is shown in Table 9.1-2.

The new fuel storage racks are designed in accordance with the American Institute of Steel Construction (AISC) Specification for the Design, Fabrication and Erection of Structural Steel for Buildings, and meet ANSI Standard N18.2 Paragraph 5.7.4.1. The racks and their supports are designed as seismic Category I in accordance with the load combinations and allowable stresses specified in Subsection 3.8.4.3. Dynamic analysis of the Fuel Handling Building is described in Section 3.7.

Lateral loads exerted on the rack support structure are resisted by a vertical bracing system which transmits these forces to the concrete floor via anchor bolts or through horizontal members into the concrete walls via embedded plates. Lateral movement of the rack with any number of fuel assemblies is prevented by these supports for all anticipated loadings.

The only device capable of placing loads over the new fuel racks is the five ton capacity fuel handling crane. Use of this crane is controlled by plant procedures.

The supporting structure is designed to limit deflections so that subcriticality is maintained under all anticipated loadings. The design of the new fuel racks is such that a fuel assembly cannot become stuck (e.g., lead-in surfaces, no sharp corners, etc.). The clearance between structural framing members is small enough to prevent insertion of a fuel assembly between adjacent cavities. Therefore the storage racks and anchorages are not subjected to uplift forces from the new fuel handling crane.

There is no sharing of the new fuel storage facility between the two St. Lucie units.

9.1.2 SPENT FUEL STORAGE

9.1.2.1 Design Basis

The spent fuel storage racks are designed to:

a. allow storage of up to 1716 fuel assemblies (366 fuel assemblies in Region I with a maximum nominal planar average enrichment of 4.6 wt % U-235 and 1125 assemblies in the Spent Fuel Region II racks and 225 assemblies in the Region II Cask Pit Rack) under flooded conditions,

b. maintain subcritical conditions with a k_{eff} of less than 1.0 assuming nonborated, full density water in the fuel pool,

c. maintain a fuel pool k_{eff} of less than or equal to 0.95 when flooded with water containing 500 ppm boron,

d. maintain a minimum allowable fuel spacing such that a subcritical array, with the assumptions of b), and c), under all design loadings, including the SSE displacements is ensured,

e. preclude insertion of a fuel assembly between individual fuel storage cavities,

f. allow fuel cooling by the Fuel Pool Cooling System (Subsection 9.1.3), and

g. allow fuel assembly removal from the spent fuel racks under the following conditions,

1) thermal expansion loads of the rack modules

2) the impact load resulting from a fuel assembly (with CEA) being dropped in the vertical position from the maximum height it can be lifted above the racks (approximately 1.5 ft. above the racks), in addition to condition (1), and

3) loads resulting from seismic disturbances (SSE and OBE), in addition to condition (1).

Additionally, in December of 1998 St. Lucie Unit 2 elected to comply with the requirements of 10 CFR 50.68(b), which includes restrictions on the reactivity of stored spent fuel.

9.1.2.2 System Description

The Fuel Handling Building general arrangement showing the location of the spent fuel storage facilities is given on Figures 1.2-16 and 1.2-17. The spent fuel racks and associated equipment are shown on Figures 9.1-2, 9.1-2A, 9.1-2B, 9.1-3A, 9.1-3B, and 9.1-4. The design and manufacture of the spent fuel racks were provided by Combustion Engineering. The Cask Pit Rack was designed and manufactured by Holtec International .

The Spent Fuel Pool storage racks are located outside the containment in the Fuel Handling Building. It is designed for the underwater storage of up to 1491 spent fuel assemblies (approximately 6.87 full cores) and the fuel handling tools. The current layout of storage rack cells available for fuel assembly placement is shown on Figure 9.1-5. Reference 12 provides details on the fuel assembly characteristics required for storage in each location. Administrative controls are used, along with physical constraints, to prevent placement of fuel assemblies in unacceptable locations. To achieve the licensed storage capacity of 1491 assemblies, some of the cell blocking devices originally installed in Region I and II rack modules to preclude placement of fuel were removed.

Region I contains four 7 x 11 modules and two 7 x 10 modules; i.e., six modules, with a total of 448 cells.

Region I is the high-enrichment, core off-load region. Region I permits storage of 366 fresh and irradiated fuel assemblies. These inserts lock into the storage cavity using a spring locking mechanism on the upper end (see Figure 9.1-3a). The cell blocking devices are removable to

accommodate future capacity and spacing requirements. Visual indicators are provided on the L-insert blocking bars to enhance visibility from the spent fuel handling machine.

Region II contains one 8 x 10 module and twelve 8 x 11 modules, i.e., 13 modules with 1136 storage cells, of which up to 1125 are available for storage of fuel assemblies Previously, the presence of cell blocking devices was credited in the criticality analysis to preclude placement of fuel assemblies in every fourth cavity. Cell blocking devices, containers of non-fuel material, and procedural controls are used to control placement of fuel assemblies. Region II is used to store fuel that has experienced sufficient burnup such that storage in Region I is not required. The tools used to reposition 'L' inserts and to remove Region II cell blocking devices are normally stored in the Fuel Handling Building. These manually operated tools, which are noted on Table 9.1-3a, are operated from the spent fuel handling machine. During use, certain of these tools will be attached to the spent fuel handling machine hoist.

Metamic™ inserts have been installed into selected Spent Fuel Pool (SFP) Region II rack cells as a neutron absorber.

The maximum expected quantity of Metamic Inserts for Region II of the SFP is 568; assuming 2 out of every 4 cells are occupied with a Metamic.

Reference 22 provides all of the design, installation, and analysis performed to determine acceptability of the use of Metamic™ inserts in Region II of the Spent Fuel Pool.

The Metamic™ inserts are manufactured in the shape of an "L" and, when inserted, will blanket two of the four walls of the host storage cell. Each insert consists of Metamic™ panels formed with a top landing surface. When installed, the top landing of the insert will rest on the upper guide posts of the fuel assembly. The top landing of the inserts is equipped with an interface for lifting and handling by a custom designed tool. The insert will not extend to the base-plate of the storage cell; however, the design of the insert ensures that, when seated in the rack cell, less than six inches of the bottom of the active fuel region of the fuel assembly will not be shadowed by the adjacent Metamic panel.

Holtec International, the Metamic™ insert provider, has evaluated the structural adequacy of the PSL Region II spent fuel pool racks in response to seismic events when Metamic™ inserts are installed. Loadings postulated to occur during normal, seismic, and accident conditions were considered. All safety factors were considerably less than allowed and were judged acceptable.

Holtec International also evaluated the structural adequacy of the PSL spent fuel pool with the Metamic™ inserts installed in the Region II racks. Loadings postulated to occur during normal, seismic accident conditions were considered. All safety factors were considerably higher than required and were judged acceptable.

Lastly, the Metamic™ inserts were analyzed for seismic loading and were found to be structurally adequate to perform their intended design function under both normal and seismic conditions.

Holtec International performed two analyses, Bulk Spent Fuel Pool temperature and Local temperature, to determine the effects associated with the use of Metamic inserts. The results of the analyses indicated that Metamic™ insert effects on the spent fuel pit bulk temperature were bounded by previous analysis. The analysis showed the maximum (peak) local water temperature will be 211°F. Since the minimum depth at the top of the active fuel length is 23 EC291265

feet and the saturation temperature at this depth is 239°F, local boiling will not occur while forced-flow cooling is available. Also, the calculated peak local fuel cladding temperature, 238°F is also lower than the local saturation temperature. EC291265

This analysis conservatively assumed a minimum of 90 hours for starting the core offload, as well as an existing pool heat limited to 4.75E6 BTU/hr (which includes pump heat). EC291265

Additionally, Holtec performed a bounding analysis assuming a core offload starting at 72 hours with an existing spent fuel pool heat load (including pump heat) of 6.5E6 BTU/hr. This case resulted in a maximum local water temperature of 215 °F and a local clad temperature of 248 °F. While the clad temperature exceeds the saturation temperature, DNB does not occur as the heat flux is determined to remain significantly below the critical heat flux, thus meeting the DNB criterion.

Fuel handling equipment design includes interlocks, travel limits, and other protective devices to minimize the probability of either mishandling or of equipment malfunction that could result in inadvertent damage to a fuel assembly and potential fission product release.

Spent fuel assemblies are placed in stainless steel storage racks consisting of vertical cells with a center to center distance of 8.965 inches (nominal) fabricated in modular sections to facilitate shipping and installation. These racks are fabricated with 304 stainless steel having a maximum carbon content of 0.065%. The racks are monolithic honeycomb structures with square fuel storage locations as shown on Figure 9.1-2. Each storage location is formed by welding stainless steel sections along the intersecting seams, permitting the assembled cavities to become the load bearing structure, as well as framing the storage cell enclosures. The rack module wall thickness is 0.135 inch 304 stainless steel. Stainless steel bars, which are inserted horizontally through the rectangular slots in the lower region of the module and welded in place, support the fuel assemblies. Semicircular passages at the bottom of every cell wall allows cooling water flow. The size of the openings preclude blockage by any crud accumulation. L-shaped stainless steel inserts (L-inserts) are installed which provide neutron attenuation. The L-inserts are 0.188 inches thick and are shown, along with the cell blocks, on Figure 9.1-3B. As indicated in Figure 9.1-5, both L-inserts and cell blocking devices are used in Region I. Cell blocking devices in both regions can be relocated, added or deleted as they are not credited in the criticality analysis. Also, the L-insert in cell location KK-3 has been relocated to Region II cell C-28. With this configuration, no fuel assemblies may be stored in cell KK-3. When storing fuel in any of the 8 cells surrounding cell KK-3, cell KK-3 is considered to be a cell with type 1, type 2 or fresh fuel. Procedural controls based on constraints from References 12, 16, 18 and 24 are also used in Region I and are not shown on Figure 9.1-5. Cell blocking devices, procedural controls and non-fuel items are used where necessary in Region II to preclude storage of fuel assemblies in prohibited locations. EC291140 EC291140

Loading of the fuel assemblies into the racks may be facilitated by the use of lead-in funnels.

Each module is free-standing, and seismically qualified without mechanical dependence on neighboring modules or pool walls. This feature enables remote installation (or removal if required for pool maintenance) with minimal effort. Since the modules are not anchored to the fuel pool floor liner, the pool interface loads are only compression (bearing) and horizontal shear. A 10 inch support plate under each corner of the rack module provides the bearing surface. Fuel rack module leveling is accomplished by placing square stainless steel shims between the support plates and the fuel pool liner. The rack module is installed or removed with a straight hoisting motion with no unfastening required at the pool floor. This design permits

inspection or replacement of the racks without draining the pool since the modules are removed individually.

Cask Pit Storage Rack

The cask pit rack is a storage rack with a 15x15 array of cells to provide storage of 225 assemblies. The cask pit rack is a freestanding honeycomb module of cells made primarily of Type 304L austenitic stainless steel.

Each cell has a nominal inside dimension of 8.58-inches square. These cells are than arranged in a checkerboard fashion with their diagonal corner points joined by a welded connector bar. The welding of a plate between the two-separated cell outer walls creates another cell by closing the space between the cells. Where a corner location is formed, an angle plate is welded to the outer walls of the two adjacent cells to form a corner cell. The bottom portion of the cell has 1” holes punched on two or more sides for flow redundancy. Each formed cell has Boral panels installed on the outside surface. The Boral panels are fabricated with a high area loading of boron-10. The Boral panels are encapsulated by stainless steel sheathing for protection, positioning and restraint. The array of cells is welded to a base made of 0.75” stainless steel plate. At each cell position on the plate (with exception of the four cells that are lift point locations), a 5 1/4” diameter hole is cut to provide for water flow. For those cell locations identified as lift points, the base plate is slotted to accept the rack listing rig rod.

The underside of the base plate contains four adjustable support pedestals. The pedestals allow for leveling of the rack during installation. The adjustable pedestals rest on the cask pit rack platform.

The cask pit floor is approximately four feet lower than the adjacent spent fuel pit floor. To establish the height of the new cask pit rack at the same elevation as the storage racks in the SFP requires the installation of a cask pit rack platform, Figure 9.1-2b. The platform is made of SS flat plate welded together to form rectangular box beams 12” wide, 48 3/4” high and 117 5/8” in length for the long side. The short side is 93 5/8” long. An 8” schedule 160 pipe is located inside the box at each end of the long side and provides vertical support at the point where the rack pedestals bear. The top box beam directly above the pipe is equipped with a positioning ring to allow the rack pedestal to be properly positioned. In addition, the assembled box has triangular plates (4) welded at each inside corner with cutouts for attaching the lift rig. The assembled overall external dimensions are approximately 117 5/8” by 117 5/8”. The platform rests on shims (3/8” SS plate, approximately 9” x 9”) located directly under each corner of the box. The shims are grooved, as required, to provide a bridge over the cask pit floor liner seam welds.

The spent fuel transfer cask is placed in the cask pit which is located adjacent to and separate from the spent fuel pool. The cask is designed such that spent fuel assemblies are placed in the cask while still maintaining the minimum water level above the fuel assemblies. The cask shield plug is then placed in the cask and the unit is transferred to the cask handling facility (see Figure 1.2-16) by the cask handling crane.

The cask pit is designed for the following accident cases:

a. impactive load on the pit floor due to accidental dropping of the 100 ton spent fuel cask from elevation 62.5 ft. with water level at elevation 60 ft.

b. impactive load on the interior walls of the pit due to accidental dropping of the 100 ton spent fuel cask on the exterior wall and tipping of the cask over the interior walls.

Although the cask pit is designed for accidental dropping of a spent fuel cask, the main hoist of the cask handling crane is single-failure-proof, and therefore the potential for a cask drop in the cask pit area is considered to be extremely small, such that a cask drop accident need not be analyzed in accordance with Section 5.1.2 of NUREG-0612, "Control of Heavy Loads at Nuclear Power Plants".

Fuel Handling Building

The Fuel Handling Building's exterior walls, floors, and interior partitions are designed to provide plant personnel with the necessary radiation shielding and to protect the equipment from the effects of adverse atmospheric conditions including hurricane and tornado winds, temperature, external missiles, and corrosive environment. The design loading conditions and allowable stresses for the Fuel Handling Building are described in Subsection 3.8.4.3. The dynamic analysis of the Fuel Handling Building is described in Section 3.7.

The Fuel Handling Building is designed to seismic Category I requirements and consists of reinforced concrete walls. The floors and roof are of beam and girder construction supported by columns. The roof of the FHB supports some columns of the seismic Category 1 spent fuel cask handling crane superstructure. Details of the structural design and analysis of the FHB and crane superstructure are given in Section 3.8. The fuel pool portion of the Fuel Handling Building including the walls and roof directly above the pool is designed to withstand, without penetration, the impact of external missiles that might occur during the passage of a tornado. The design missiles are discussed in Section 3.5.

The spent fuel pool walls and floors are lined with stainless steel Type 304. The Fuel Handling Building Ventilation System is described in Subsection 9.4.2.

A leak detection system is provided to monitor the spent fuel pool liner welds. The system consists of a network of stainless steel angles attached to the concrete side of the pool liner walls and floor by means of welds between the plates and angles. These monitor channels do not constitute part of the pool liner pressure boundary but are watertight to collect and isolate any leakage through the liner plate welds. In the event that one of the liner plate weld seams develops a leak, the liquid enters the monitor channel system and flows to one of 15 collection points at the base of the pool. In this way, the leakage can be traced to a specific area of the pool. The actual point can be determined by pressurizing the leaking channel and looking for bubbles inside the pool. Each of the channels can be valved off in order to prevent further leakage from the pool.

The spent fuel pool is designed for a rise in the water temperature to 212 F during the winter, assuming the unlikely event of loss of both heat exchangers.

9.1.2.3 System Evaluation

<u>Spent Fuel Pool Storage Racks</u>

The storage cells that make up each module of the spent fuel racks are grouped in parallel rows and have a center-to-center distance between cells of 8.96 in. This distance maintains a

maximum k_{eff} of less than 1.0 assuming flooding with nonborated water and maximum lateral movement of the assemblies. Including the effect of tolerances and uncertainties, k_{eff} of the spent fuel storage array is maintained not greater than 0.95 when 500 ppm of soluble boron is present in the fuel pool. The presence of additional soluble boron above 500 ppm may be credited during accident conditions. The fuel pool water is borated to refueling concentration to ensure that mixing of the fuel pool water and refueling cavity water cannot dilute the refueling cavity boron concentration. Boron concentration in the fuel pool is maintained at least 1900 ppm which is adequate to preclude criticality even with fuel assemblies adjacent to each other and without CEAs. However no credit is taken for the boron in the water in establishing the safe (k_{eff} ‹ 1.0) geometry of the storage racks.

The storage rack base is supported to prevent significant lateral rack movement with any number of contained fuel assemblies under all anticipated design loadings. Lateral movement of the fuel assemblies can also result from the clearance space between the assembly and the rack. The value of k_{eff} reflects consideration of both types of lateral movement.

The all-welded construction of the racks ensures that the fuel assemblies do not become stuck when they are removed. Even if a stuck fuel assembly is postulated, the maximum uplift load would be limited to by the hoist load interlock. This situation represents a loading condition less severe than the SSE.

The rack modules are designed to withstand all anticipated loadings, including a dropped fuel assembly on the top of the spent fuel racks. The kinetic energy associated with the dropped fuel assembly is 29,000 in-lb. This energy is conservatively assumed to be totally absorbed by one rack module. Structural deformations of the racks are limited to preclude any possibility of criticality.

In addition, FP&L considered a light load as objects weighing less than a fuel assembly and all objects that are lifted over the spent fuel pool. These objects were considered for a potential drop. Table 9.1-3a presents the list of items considered in this review. Each fuel assembly in the spent fuel pool is stored in a separate module of the spent fuel rack and it is not considered conceivable that more than one fuel assembly could be damaged. Since the analysis contained in Subsection 15.7.4 assumed that all the pins in one full assembly were damaged, and that all the activity in the pin gas gap was released, the drop of a light load would have results that are no more limiting than the previously analyzed accident. Thus, a dropped light load in the spent fuel pool does not impact more than one assembly and the offsite dose is not greater than that identified in Subsection 15.7.4.

The structural design also precludes the possibility of a fuel assembly being placed in the spaces between the fuel cavities.

Adequate clearance is provided between the top of the stored fuel assembly and the top of the rack to preclude criticality in the event a fuel assembly is dropped and lands in the horizontal position on the top. Rack design also ensures adequate convection cooling of a fuel assembly laying horizontally across the top of the racks.

The spent fuel storage racks are classified as seismic Category I structures. The loads and load combinations (in compliance with applicable portions of Subsection 3.8.4.3) and allowable stresses used in the design of the racks are consistent with NRC guidance in "Review of Spent Fuel Storage and handling Applications"[(8)] and are listed below:

Load Combination (Elastic Analysis)	Acceptance Limit
D + L	Normal limits of NF 3231.1a
D + L + E	Normal limits of NF 3231.1a
D + L + To	Lesser of 2Sy or Su stress range
D + L + To + E	Lesser of 2Sy or Su stress range
D + L + Ta + E	Lesser of 2Sy or Su stress range
D + L + Ta + E'	Faulted Condition Limits of NF 3231.1c

The abbreviations in the table above are those used in Subsection 3.8.4 where each term is defined except for Ta which is defined as the highest temperature associated with the postulated abnormal design conditions.

The direct dose rate at the pool surface when not refueling is less than 2.5 mrem/hr. This dose rate is based on the most active fuel assembly two days after shutdown. During refueling the limit switches prevent the spent fuel handling machine from raising the spent fuel assembly above a height where less than nine feet of water provides minimum radiation shielding. If the interlock should fail and if there were no operator action, the fuel handling machine cannot raise the assembly above a nine feet water-to-active-fuel-length height because of the design geometry. Under the conditions described above, the dose rate at the surface of the water above the assembly would be still less than 2.5 mrem/hr. The grappling tool on the spent fuel handling machine is designed so that a fuel assembly cannot be released accidentally. The shielding provided in the Fuel Handling Building is discussed in Subsection 12.1.2.4.

A concrete wall to elevation 62 feet separates the cask storage area from the spent fuel storage area. The wall prevents the water level from uncovering the spent fuel assemblies even if a dropped fuel cask causes damage to the pool or pool liner in the cask storage area. Removable bulkheads are provided in the separating walls between the spent fuel storage pool and the cask storage area and the refueling canal. These bulkheads are designed to seismic Category I requirements.

The fuel enrichment selected for determination of the safe geometry is 4.6 percent. This is greater than the enrichment used for the initial core and is the maximum enrichment that can be used for reload cores.

Summary of Criticality Analysis Methodology - Spent Fuel Pool Storage Racks and Cask Pit Rack

Reference 12 presents the results of a criticality analysis for the St. Lucie Unit 2.

The approach and acceptance criteria used in this spent fuel pool criticality analysis are presented below:

1. Determine the storage configuration of fuel assemblies in the spent fuel racks using no soluble boron conditions such that the 95/95 k_{eff} upper tolerance limit of the system, including applicable biases and uncertainties, is less than 1.0.

2. Next, using the fuel storage configuration resulting from the previous step, calculate the spent fuel rack effective neutron multiplication factor with the chosen

concentration of spent fuel pool soluble boron present. Then calculate the sum of: (a) the latter multiplication factor, (b) the reactivity uncertainty associated with fuel assembly and storage rack tolerances, and (c) the biases and other uncertainties required to determine the final 95/95 confidence level effective multiplication factor and show that at the chosen concentration of soluble boron, the system maintains the overall effective multiplication factor less than or equal to 0.95.

3. Determine the increase in reactivity caused by postulated accidents and the corresponding additional amount of soluble boron needed to offset these reactivity increases.

Using this methodology for the limiting condition with no soluble boron present, a k_{eff} value was calculated for the following ten fuel configurations (cases):

Case 1: Cask Pit Rack with a checkerboard of fresh fuel and empty cells

Case 2: Region 1 storage rack with a checkerboard of fresh fuel and empty cells

Case 3: Region 1 storage rack 2x2 array of uniformly loaded spent fuel, with one cell containing a fuel assembly containing absorber rods

Case 4: Region 1 storage rack 2x2 array uniformly loaded with spent fuel in any three storage locations and one storage location empty

Case 5: Region 2 storage rack 2x2 array uniformly loaded with spent fuel, with any two of the four cells containing a Metamic™ insert

Case 6: Region 2 storage rack 2X2 array uniformly loaded with spent fuel, with any one of the four cells containing a Metamic™ insert

Case 7: Region 2 storage rack 2x2 array uniformly loaded with spent fuel, with one empty location out of the four storage locations

Case 8: Cask Pit Rack 2x2 array uniformly loaded with spent fuel, with one empty location out of the four storage locations

Case 9: Region 2 storage rack 2x2 array uniformly loaded with spent fuel, with any two of the four cells containing absorber rods in the fuel assemblies

Case 10: Region 2 storage rack 2x2 array uniformly loaded with spent fuel, with any one of the four cells containing absorber rods in the fuel assemblies

k_{eff} values were also calculated for Case 1 through 10 when credit for the presence of soluble boron was assumed. As was done for the 0 ppm case discussed above, this k_{eff} value includes allowances for biases, tolerances and uncertainties that are applicable to this calculation and storage configuration.

Tables 9.1-3b and 9.1-3k summarize the values of k_{eff} calculated for the limiting spent fuel storage array with 4.6 % and no soluble boron present.

There are a variety of accidents that can be postulated to occur in connection with operations in the vicinity of the spent fuel pool. Most of these accidents can be demonstrated to not increase the reactivity of the spent fuel pool system. For example, equipment interlocks and the storage rack design ensure that a fuel assembly drop accident does not result in any significant increase in system reactivity. This is because a large separation distance is maintained between the dropped assembly and the active volume of the assemblies within specified storage rack locations.

The credible accidents considered are the effect of temperature exceeding the normal range, dropped assemblies, misloaded and mislocated single fresh assemblies, a missing Metamic insert, and the multiple misload of burned assemblies. A summary of the accident calculations and the soluble boron amount required to ensure that k_{eff} is not greater than 0.95 is shown in Table 9.1-31.

The principal method for the criticality analysis of the storage racks is the use of the Monte Carlo code MCNP5 (Reference 1). MCNP5 is a continuous energy three-dimensional Monte Carlo code developed at the Los Alamos National Laboratory. MCNP5 was selected because it has been extensively used and verified for criticality analyses for new and spent fuel storage racks and has the necessary features for this analysis. MCNP5 calculations predominantly used continuous energy cross-section data based on ENDF/B-V and ENDF/B-VI. Note that MCNP5 is used for all criticality analyses, including those to evaluate the reactivity effect of fuel and rack tolerances and temperature variations, and to perform various studies.

Actinide benchmarking of MCNP5 was performed based on calculations for a total of 291 critical experiments with fresh UO_2 fuel, fresh MOX fuel, and fuel with simulated actinide composition of spent fuel (HTC experiments). The results of these benchmarking calculations show few significant trends, and indicate a bias of 0.0036 with an uncertainty of ± 0.0085, evaluated with a 95% probability at the 95% confidence level (Reference 2). The statistical analyses of the benchmark calculations also include the evaluation of trends and applicable subsets of the experiments, and the results of those analyses are considered. Note that the calculations for St. Lucie Unit 2 utilize the same computer platform and cross- section libraries used for the benchmark calculations. Additionally, the uncertainty in the reactivity worth of the fission products is considered in the overall uncertainty evaluation in a conservative manner. Fuel depletion analyses during core operation were performed with CASMO-4, a two-dimensional multi- group transport theory code based on the Method of Characteristics (Reference 3). CASMO-4 is used to determine the isotopic composition of the spent fuel. The depletion uncertainty, i.e. the uncertainty of the isotopic composition of the spent fuel, is considered in the overall uncertainty evaluation.

The maximum k_{eff} is determined from the MCNP5 calculated k_{eff}, the calculational bias, the temperature bias, and the applicable uncertainties (bias uncertainties, calculational uncertainty, depletion uncertainty) by using the following formula:

$$\text{Max } k_{eff} = \text{Calculated } k_{eff} + \text{biases} + [\Sigma_i (\text{Uncertainty})^2]^{1/2}$$

In the geometric models used for the calculations, full three-dimensional model are used, each fuel rod and its cladding were described explicitly, and reflecting or periodic boundary conditions were used in the radial direction which has the effect of creating an infinite radial array of storage cells. The models use bounding parameters for the important rack and fuel tolerances, so that their effect is explicitly included in the calculated k_{eff} value. This is more conservative than including those as uncertainties.

The spent fuel storage racks are designed to withstand forces generated during normal operation, an Operating Basis Earthquake, or a Safe Shutdown Earthquake. Lateral and vertical seismic loads along with fluid forces are considered to be acting simultaneously on the fuel racks. The racks are designed to assure rack structural integrity while at the same time keeping the fuel in a subcritical state.

Linear response spectrum methods are used for the vertical direction. The lateral seismic responses of the spent fuel storage racks are determined using a non-linear time history analysis. Non-linear time history analyses are performed for the lateral directions primarily because of fuel impacting. The effects of impacting structures significantly influence the stresses in both the storage structure and the fuel and, because they are non-linear in nature, can only be accounted for by performing more complex non-linear time history analyses.

The seismic input used for these analyses consists of the vertical response spectrum and the lateral acceleration time histories corresponding to the pool floor elevation at St. Lucie Unit 2. The analyses are performed in accordance with RG 1.122, Revision 1, February 1978.

The first step in the analytical procedure is to determine the dynamic characteristics of the fuel storage racks. This is done by developing a three-dimensional finite element model of the structure and solving for the natural frequencies and mode shapes in air. The finite element code used in the study is SAP IV.[6]

The resulting dynamic characteristics are then incorporated into a nonlinear representation of the entire system which includes the fuel and storage racks. The CESHOCK computer code[6,7] is used to determine the non-linear time history response of the system. The effects of impacting between the fuel and the storage rack are represented in the CESHOCK model. Because of the close proximity of the structures, hydrodynamic coupling effects between the fuel, the storage rack and the pool are also included in the model.[5]

The racks are analyzed using a finite element model in the SAP IV code and the seismic and impact loads. SAP IV output consists of membrane stresses and bending moments for each element. When dealing with this type of element, the results are given per unit length; therefore, the stress caused by the moment will be arrived at by the following expressions:

$\sigma_B = MC/I$ for a unit length strip, $I = \frac{It^3}{12}$

$C = t/2$ $C/I = 6/t^2 \longrightarrow \sigma = 6\ M/t^2$

This approach applies to M_x, M_y, and M_{xy} thus, the total stress in any one direction will be:

$\sigma_t = \sigma_{memb} + 6\ M/t^2$

The beams used at the bottom of each cavity opening to support the stored fuel assembly are included in the model as lumped masses with no structural rigidities. The beams are then analyzed for a clearer understanding of the existing stress situation. Again the stress caused by the moment will be arrived at by the expression $\sigma = MC/I$, and the shear stress by the expression $\sigma = P/A$.

The computer codes used in these analyses are described below:

SAP IV is a general structural analysis program for static and dynamic analysis of linear elastic complex structures. The finite element displacement method is used to solve for the displacements and compute the stresses of each element of the structure. The structure can be composed of unlimited number of three-dimensional truss, beam, plate, shell, solid,

The computer codes used in these analyses are described below:

SAP IV is a general structural analysis program for static and dynamic analysis of linear elastic complex structures. The finite element displacement method is used to solve for the displacements and compute the stresses of each element of the structure. The structure can be composed of unlimited number of three-dimensional truss, beam, plate, shell, solid, plane strain-plane stress, thick shell, spring, axisymmetric elements. The program can treat thermal and various forms of mechanical loading as well as internal element loadings. Dynamic analysis options consist of eigenvalue solutions yielding frequencies and mode shapes, response history by mode superposition, response history by direction integration, and response spectrum analysis. Earthquake type of loading as well as time varying pressure can be treated. The output consists of displacements at each modal point as well as internal member forces for each element.

The program being used is essentially equivalent to the version verified, documented, and released by the University of California.[6]

The CESHOCK computer code performs transient, dynamic analyses of nonlinear elastic systems. These systems can be either axial models having one degree-of-freedom per node or lateral ones having one rotational and one translational degree of freedom per node. The response of a system is determined by numerically integrating (using a Punge-Kutta-Gill technique) its equations of motion. Excitation can take the form of either initial conditions or time histories of applied accelerations, velocities displacements or forces. The non-linearities can consist of gaps, friction, hysteresis or non-linear springs. Hydrodynamic action can also be modeled, with both on-diagonal (added mass) and off-diagonal (coupling) terms being considered.

The program automatically searches the response time histories and prints out the maximum and minimum values of all modal accelerations, and member loads and can generate an optional output tape containing the complete response histories.

"CESHOCK" is an extensively modified, proprietary version of the "SHOCK" computer code developed by V. K. Gabrielson and P. T. Reese of Sandia Laboratories[7]. It differs from the original in the areas of damping, coefficient of restitution, friction, hydrodynamic effects, hysteresis, input of time histories, output options, allowable problem size and the manner of inputting stiffness elements. CESHOCK has been verified by demonstration that its solutions are substantially identical to those obtained by hand calculations or from accepted analytical results via an independent computer code.

To ensure that the criticality analysis follows a conservative approach and conforms to the general guidelines of criticality safety analysis, the calculations are performed with assumptions as listed in Table 9.1-3.

<u>Cask Pit Storage Rack</u>

The cask pit forage rack provides for additional storage of spent fuel assemblies during prescribed times. Reference 21 imposes the following restrictions with respect to the storage of fuel in the spent fuel storage racks: the combined number of fuel assemblies loaded in the spent fuel storage racks and cask pit rack is limited to no more than the capacity of the spent fuel storage racks at all times except during a reactor off/load/refueling condition. This restriction will assure the capability to unload and remove the cask pit rack when cask loading operations are necessary.

The storage cells that make up the cask pit storage rack are grouped in parallel rows and have a center to center distance of 8.8”. The cask pit storage rack, Figure 9.1-2a, is designed as a Region II fuel storage rack, capable of storing fresh (Case 1) assemblies in a checkerboard of fresh and empty cells or spent fuel assemblies (Case 8) where 1 in 4 storage cells is empty. The rack is designed to maintain K_{eff} <1.0 with no soluble boron present in the spent fuel pool water and ≤ 0.95 when credit is taken for soluble boron.

The cask pit storage rack and platform are designed as Seismic Category I, Class 3 component supports in accordance with the requirements of Reference 8. The seismic and structural analysis of the rack concluded that at the maximum seismic displacement, the cask pit rack would not impact the cask pit wall nor tip-over even without the cask pit walls. The weld locations are cell-to-cell joints and at the bottom of the rack were found to be below allowable stress values. Rack cell deformation due to impact loads from stored fuel assemblies were determined not to occur. The stress factors for the most heavily loaded sections of the rack structure, the pedestals and the entire rack cellular cross-section just above the bottom casting, are less than allowable limits.

The structural analysis assumed the platform to be de-coupled from the rack but subject to the loads imposed by the rack in response to seismic events, including horizontal and vertical loads, stress on box frame welds, pipe weld stress and gusset plate weld stresses. The analysis determined platform stresses were acceptable for Level A and Level 3 conditions and lifting conditions with safety factors being greater than 1.0 for bearing, tear-out, gross force and moment. Therefore, the cask pit storage rack and platform meet all loads and loading combinations stated in ASME Section III, Subsection NF and NUREG-0800, Standard Review Plan (SRP), Section 3.8.4, Appendix D.

The cask pit rack was analyzed for the effects of fuel assembly drop accidents including the dropping of an assembly with handling tools (approximate weight of 2000 lbs) from a height of 36” directly onto the top of a stored fuel assembly, onto the top edge of the rack (shallow drop) and through an empty cell impacting the base plate (deep drop).

The dropping of an assembly directly on the top of a stored assembly was not analyzed since the stored assembly would absorb a portion of the impact energy and result in less damage to the rack. Therefore, this accident would be bounded by either the “shallow” or “deep” drop accidents detailed below. The analysis concluded dropping an assembly on the top edge of the rack (shallow drop) would cause deformation on the rack to a point 12.5’ below the top. Since the poison zone is located approximately 26” below the top of the rack, no damage to the poison zone would occur and functional integrity of the rack would be maintained.

The deep drop of assembly vertically into an empty cell (not above a pedestal) would deform the base plate by 1.96”. This distance is less than the height of the base plate above the platform, so contact with the platform will not occur. The analysis concluded the change in reactivity due to the misplacement of an assembly by 2” at the bottom of the rack would be negligible.

The deep drop of a fuel assembly vertically into an empty cell directly above a pedestal results in only elastic deformation to the rack platform. The stress imparted to the pool liner is well below the yield stress and the maximum compressive stress imparted to the concrete is less than concrete compression, hence no liner or concrete slab damage would occur.

The Fuel Pool Cooling System is described in Subsection 9.1.3. The fuel pool design meets the positions of the Regulatory Guide 1.13, "Spent Fuel Storage Facility Design Basis", December 1975 (R1) applicable to the spent fuel pool (C.1, 2, 3, 4, 5, 7) as described below.

Position 1 The spent fuel storage facility and spent fuel storage racks are seismic Category I as described in Sections 3.7 and 3.8.

Position 2 The spent fuel storage facility is designed against hurricane or tornado winds and missiles generated by the winds from affecting the integrity of the pool. Missiles generated by hurricane or tornado winds are prevented from penetrating the building. The Fuel Handling Building is designed in accordance with the ACI Standard Building Code Requirements for Reinforced Concrete, ACI 318-71. Details of the structural design and analysis of the Fuel Handling Building are given in Subsection 3.8.4.

Position 3 PSL is in compliance with NUREG-0612 and therefore in compliance with Regulatory Guide 1.13, position C3. The outdoor spent fuel cask handling crane is a single-failure-proof design with interlocks and physical stops, including the physical design of the building roof opening above the cask pit area, that prevents the crane from carrying a load over irradiated fuel stored in the adjacent spent fuel pool.

The spent fuel handling machine crane and trolley will not be parked over the spent fuel storage racks, when not handling fuel. Both the bridge and trolley of the spent fuel handling machine have lugs which engage the rails and prevent the bridge or trolley from lifting off the rails or overturning from any position during a DBE.

Position 4 The Fuel Handling Building is not a controlled leakage facility; however doses from a fuel handling accident are kept within the guidelines established for design basis accidents. The assumptions, evaluations, and results of the fuel handling accident analysis are given in Subsection 15.7.4.

Position 5 The cask handling crane main hoist meets Position C.5.b. The cask handling crane is designed to provide single-failure-proof handling of heavy loads, so that a single failure will not result in a loss of capability of the crane handling system to perform its function of safely holding the load. With this design, the potential for a cask drop is considered to be extremely small, such that a cask drop accident need not be analyzed in accordance with Section 5.1.2 of NUREG-0612, "Control of Heavy Loads at Nuclear Power Plants".

The crane auxiliary hoist is not designed to be single-failure-proof. However, administrative controls will prohibit use of the auxiliary hoist inside the fuel handling building. Therefore, a load drop analysis inside the fuel handling building is not necessary to meet this position.

The fuel pool is designed to withstand dropping of a fuel assembly from the highest height (1.5 ft. above the top of the fuel assemblies) that it can be lifted to by the spent fuel handling machine.

Position 7 Frequently tested (refer to Subsection 9.1.2.5) monitoring equipment provides local and control room alarm of high radiation and low fuel pool water level. The Fuel Pool Cooling System instrumentation is discussed in Subsection 9.1.3.2.4.

9.1.2.4 Testing and Inspection

The welded steel spent fuel and new fuel storage racks were liquid penetrant tested for structural adequacy. Fuel handling cranes are load tested with a test weight in accordance with plant procedures prior to lifting fuel assemblies.

9.1.2.5 Instrumentation Applications

Temperature, pressure, and radiation monitoring instrumentation are provided locally to verify that the decay heat from the spent fuel assemblies is being removed. Alarms are provided in the control room. Table 12.3-2 gives the location of the area radiation monitoring in the Fuel Handling Building. An indication of the radiation in the area is given by the high and high-high radiation alarms.

9.1.3 FUEL POOL COOLING AND PURIFICATION SYSTEM

9.1.3.1 Design Bases

The Fuel Pool System is designed to provide continuous cooling for spent fuel assemblies stored in the fuel pool. This permits storage of spent fuel assemblies in the fuel pool from the time the fuel is unloaded from the reactor vessel until it is shipped offsite.

The cooling portion of the Fuel Pool System is capable of removing the decay heat produced in the fuel from a full core placed in the spent fuel pool after reactor shutdown, in addition to the decay heat load from fifteen batches previously discharged following 18 month fuel cycles. With two fuel pool pumps operating, and with a maximum component cooling water temperature of 100°F the maximum spent fuel pool water temperature does not exceed 150°F. With one fuel pool pump operating and one fuel pool heat exchanger in service and with the maximum component cooling water temperature of 100°F the maximum spent fuel pool water temperature does not exceed 150°F, when 1508 spent fuel assemblies discharged following 18 month cycles are in the fuel pool, and the most recent batch of 100 discharged assemblies has been placed in the pool. This assumed quantity of stored irradiated fuel exceeds the 1716 assembly licensed storage capacity for Unit 2. The maximum heat load for a partial core offload was calculated to be 23.3 x 10^6 BTU/hour. EC291265 EC291265 EC291265

The Fuel Pool System also includes purification equipment designed to remove soluble and insoluble foreign matter from the fuel pool water and dust from the fuel pool surface. This maintains the fuel pool water purity and clarity, permitting visual observation of underwater operations. See Subsection 9.1.3.2.2.1 for fuel pool water chemistry.

A minimum depth of 23 feet of water over the stored spent fuel assemblies is normally maintained to limit the maximum continuous radiation dose levels in working areas to less than 2.5 mrem/hour (See Subsection 12.1.2.4 for further information on dose rate) and to ensure that

the offsite dose consequences due to a postulated fuel handling accident are acceptable. The minimum design limit depth over the spent fuel to maintain the radiation dose levels to less than 2.5 mrem/hour is 9 feet. Normal makeup to the fuel pool is from the refueling water tank or the primary water tank, depending on the fuel pool boron concentration.

The EPU power impact on the Fuel Pool Cooling System has been analyzed, taking into consideration the high density racks.

For the case of failure of a fuel pool cooling train, the maximum temperature rise, calculated assuming the loss of one fuel pool cooling train at the time of maximum heat load, will be used to set the limit on the maximum pool temperature such that the loss of one fuel pool cooling train will not result in pool bulk temperature to exceed 150°F. EC291265

As an alternative, calculations of cycle-specific decay heat loads present following a full core fuel offload may be used to demonstrate compliance with this requirement, consistent with References 14 and 21.

When spent fuel is stored in the cask pit rack, the removable bulkhead gate between the cask pit and the spent fuel pool must not be installed. This will insure proper cooling of the spent fuel stored in the cask pit rack.

9.1.3.2 System Description

The P & I diagram of the Fuel Pool System is shown on Figures 9.1-6 and 9.1-7a. The system process flow data is shown in Table 9.1-5.

9.1.3.2.1 Fuel Pool Cooling

The cooling portion of the Fuel Pool System is a closed loop system consisting of two half-capacity fuel pool pumps and two full-capacity fuel pool heat exchangers, where the full capacity condition corresponds to the design condition of a full core placed in the spent fuel pool seven days after reactor shutdown, in addition to the decay heat from eleven batches discharged following 18 month cycles, each of which has received 48 months of full power burnup. The fuel pool water is drawn from the fuel pool near the surface as required and is circulated by the fuel pool pumps through one of the fuel pool heat exchangers where heat is rejected to the Component Cooling Water System. From the outlet of the fuel pool heat exchanger, the cooled fuel pool water is returned to the bottom of the fuel pool via a distribution header. This spray header allows for overall pool circulation. The cooling system is controlled manually from a local control panel. Control room alarms for high fuel pool temperature, high and low water level in the fuel pool, low fuel pool pump discharge pressure, overload of fuel pool cooling and fuel pool purification pump motors and, as discussed in Subsection 9.1.2, high radiation in the fuel pool area are provided to alert the operator to abnormal circumstances. Radiation monitoring for spent fuel pool area and Fuel Handling Building stack is discussed in Section 11.5. The components and piping are Quality Group C, seismic Category I.

9.1.3.2.2 Fuel Pool Purification

The clarity and purity of the water in the fuel pool, refueling cavity and refueling water tank are maintained by the purification portion of the fuel pool system. The purification loop consists of a fuel pool purification pump, fuel pool filter, fuel pool purification pump suction strainer, fuel pool ion exchanger, fuel pool skimmer, fuel pool ion exchanger strainer, associated valves, and

piping. Purification is conducted on an intermittent basis as required by the fuel pool water conditions. Most of the purification flow is drawn directly from the bottom of the fuel pool while a small fraction of the purification flow is drawn through the fuel pool skimmer to remove surface debris. During purification operations, the capability exists for taking suction at three different levels within the pool to prevent stratification. A strainer is provided in the purification line to the fuel pool purification pump suction to remove particulate matter before the fuel pool water is pumped through the fuel pool filter and the fuel pool ion exchanger. The fuel pool water is circulated by the fuel pool purification pump through the fuel pool filter, which removes particulates, then through the fuel pool ion exchanger to remove ionic material, and finally through a "Y" type fuel pool strainer.

Connections to the refueling water tank provide makeup to the fuel pool through the purification loop. In addition to purifying the fuel pool water, the refueling water tank and the refueling transfer canal are cleaned through connections to the purification loop. The purification loop components and main process piping are Quality Group D, non-seismic.

9.1.3.2.2.1 Fuel Pool Chemistry

Fuel pool water chemistry is given in Table 9.1-4. The major chemical concerns for the fuel pool are boron reactivity worth, radioactivity, and optical clarity. Proper boron reactivity worth is maintained by adding water to the pool at the prescribed refueling concentration. Soluble and insoluble radioactivity in the water is controlled by the fuel pool purification circuit while gaseous and airborne radioactivity is controlled by area ventilation systems. The purification system is normally run on an intermittent basis as required to maintain the fuel pool water purity and clarity permitting underwater operations for discharge of spent fuel, bundle inspection and visual observation for these planned maneuvers. Crud carried into the pool on spent fuel usually settles to the bottom of the pool and can be removed by the pool purification loop, or via special underwater vacuum cleaning equipment connected to an external filter. With the exception of that time after fuel bundle movement when crud is sloughed off and clouds the water, optical clarity is maintained through purification system operation.

Various samples are taken periodically from local sample points off the purification loop (fuel pool filter inlet, filter outlet/fuel pool ion exchanger inlet and the ion exchanger outlet) to meet the chemistry objectives. Wet chemistry techniques are used to analyze key parameters. These parameters include pH and conductivity for monitoring proper system operating condition and for minimizing corrosion, boron for maintaining proper boron reactivity worth and chloride and fluoride for monitoring ion exchanger performance.

9.1.3.2.3 Component Description

The major components of the Fuel Pool System are described in this section. The principal component data summary is given in Table 9.1-6.

a. Fuel Pool Heat Exchanger

Each fuel pool heat exchanger is a horizontal shell and tube design with a two-pass tube side. A slight pitch, three degrees above the horizontal, is provided for completed draining of the fuel pool heat exchangers. The component cooling water circulates through the shell side, and fuel pool water circulates through the tube side. The internal wetted surface (tube side) is stainless steel.

b. Fuel Pool Purification Filter

The fuel pool purification filter is located upstream of the fuel pool ion exchanger to remove any particulates in the fuel pool water. The fuel pool purification system, depending on what size micron rated filter is installed, is capable of retaining 98 percent of the particulates larger than 5 micron in size at a flow of 150 gpm. The filter micron rating is chosen prior to filter installation with consideration given to optical clarity requirements of the fuel pool and whether or not fuel inspections/moving activities are being performed. Due to the possible buildup of high activity in the filter, the unit is a bottom loaded filter with integral shielding surrounding the filter. The filter is changed when there is high crud and impurity levels due to low filter efficiency or resin exhaustion and abnormally high radiation levels and unit decontamination factors. The removal of the contaminated filter cartridge is accomplished with adequately shielded handling equipment. The filter drains to the drain collection header in the Waste Management System. The internal wetted surface is stainless steel. A temporary portable filter/vacuum is also available to aid in fuel pool cleanup and improve water clarity.

c. Fuel Pool Ion Exchanger

The fuel pool ion exchanger removes ionic matter from the water. Mixed bed resin is used with the anion resin converted to the borate form and the cation resin in the hydrogen form. As permitted by Reference 19, particle removal resin may be placed on top of the mixed bed resin bed to provide a means to remove concentrations of Co and Ni corrosion products. The units are provided with all connections required to replace by sluicing. The ion exchanger contains a flow distributor on the inlet to prevent channeling of the resin bed and a resin retention element on the discharge to prevent discharge of resin with the effluent. The internal wetted surface is stainless steel.

d. Fuel Pool Skimmer

The fuel pool skimmer removes floating pollutants from the surface of the fuel pool during purification operations. This portable component uses a small fraction of purification suction flow for its operation. It is a floating weir type skimmer.

e. Fuel Pool Purification Pump Suction Strainer

The fuel pool purification pump suction strainer prevents any relatively large particles from entering the fuel pool purification pump. The internal wetted surface is stainless steel,

f. Fuel Pool Ion Exchanger Strainer

The "Y" strainer removes resin fines from the purification flow in the event of fuel pool ion exchanger lower retention element failure. Blowdown is directed to the spent resin tank in the Waste Management System. The internal wetted surface is stainless steel.

g. Fuel Pool Cooling Pumps

There are two fuel pool pumps installed for parallel operation. Under normal operating conditions, only one pump is required for operation. The pumps are centrifugal type and provided with mechanical seals. These pumps are ASME III Class 3 and the motors are Class 1E safety related components. The seals are provided with leakoff vent and drain connections.

h. Fuel Pool Purification Pump

The centrifugal type fuel pool purification pump is provided with mechanical seals to minimize shaft leakage. The seals are provided with leakoff vent and drain connections. It is a non-safety pump which is physically independent and electrically separated from the Class 1E components.

i. Piping and Valves

All the piping in the Fuel Pool System is stainless steel with mostly welded connections throughout. All the valves in the Fuel Pool System are stainless steel, at least 150 lb. ANSI pressure rating.

9.1.3.2.4 Instrumentation Requirements

A tabulation of instrument channels is included in Table 9.1-7

9.1.3.2.4.1 Temperature Instrumentation

a. Fuel pool temperature indications are provided locally and high temperature alarms are actuated in the control room to warn the operator of a system malfunction. Two separate instrument channels are used due to the importance of preventing the fuel pool water from boiling resulting in a loss of fuel pool water.

b. Fuel Pool Heat Exchanger Inlet Temperature: Local indication of the fuel pool heat exchanger inlet temperature (tube side) is provided. This indication, in conjunction with the heat exchanger outlet temperature and component cooling water temperature, serves as a measure of fuel pool heat exchanger performance.

c. Fuel Pool Heat Exchanger Outlet Temperature: Local indication of the fuel pool heat exchanger outlet temperature (tube side) is provided.

d. Fuel Pool Ion Exchanger Inlet Temperature: Local indication of the fuel pool ion exchanger influent temperature is provided. This temperature is monitored so as to not exceed the highest permissible ion exchange resin operating temperature (140 F).

9.1.3.2.4.2 Pressure Instrumentation

a. Fuel Pool Pump Discharge Pressure: The discharge pressure of each fuel pool pump is indicated locally.

b. Fuel Pool Pumps Discharge Header Pressure

A discharge header pressure switch for the fuel pool pumps serves to activate a low pressure alarm in the control room to warn the operator of system malfunction.

c. Fuel Pool Purification Pump Suction Pressure

Suction pressure to the fuel pool purification pump is indicated locally. This indication, in conjunction with the fuel pool purification pump discharge pressure gage serves as a measure of fuel pool purification pump performance.

d. Fuel Pool Purification Pump Discharge Pressure

Discharge pressure of the fuel pool purification pump is indicated locally.

e. Fuel Pool Purification Filter and Fuel Pool Ion Exchanger Differential Pressure

Differential pressure of the fuel pool purification filter and the fuel pool ion exchanger are indicated locally.

Periodic readings of these instruments indicate any progressive loading of the units.

9.1.3.2.4.3 Level Instruments

a. Fuel Pool Water Level

The fuel pool water level is monitored by two redundant level switches. These switches actuate a hi/low level alarm in the control room to warn the operator of system malfunction. Two separate level instrument channels are used due to the importance of maintaining fuel pool water level.

9.1.3.3 Safety Evaluation

The Fuel Pool Cooling System is designed to assure adequate cooling of stored fuel during routine operation and following normal planned offloads. The Fuel Pool Cooling System design basis requires that the SFP bulk water temperature be maintained at 150°F or below (as applicable) following partial-core offloads, assuming a single failure of an active component, coincident with a loss of offsite power, and following full-core offloads, with no single failure assumption.

The cask pit storage rack provides for additional storage of spent fuel during prescribed times. Spent fuel stored in the cask pit rack must meet the same conditions as those in the SFP. EC291265

References 20 and 21 detail the analysis performed to demonstrate the capability of the Fuel Pool Cooling System to maintain spent fuel pool temperatures during various off-load scenarios. EC291265

<u>Planned Partial-Core Offload with a Single Active Failure</u>

The bounding case for the partial-core offload assumes that 100 assemblies are offloaded to the SFP, completely filling all storage locations, starting at 95 hours after reactor shutdown. The minimum decay time for the previously offloaded fuel is taken to be 15 months, based on a nominal operating cycle length. The case also assumed a single active component failure had occurred. In evaluating the maximum SFP bulk water temperature, the analysis was based on a EC291265

cooling configuration that credits operation of one SFP cooling pump and one SFP heat exchanger. The loss of one SFP cooling pump is taken as the single active failure. An SFP bulk water temperature of 140.93°F was calculated for this offload scenario, with a corresponding coincident net heat load of 23.3 MBtu/hr occurring at 127 hours after reactor shutdown, which is below the design basis water temperature of 150°F during refueling. EC291265

Refueling Full-Core Offload EC291265

The full-core offload is evaluated assuming 217 assemblies are offloaded to the SFP, completely filling all storage locations. The 217 offloaded assemblies are assumed to consist of 73 assemblies with 55 GWD/MTU of irradiation at full power, 72 assemblies with 49.5 GWD/MTU of irradiation at full power and 72 assemblies with 27.5 GWD/MTU of irradiation at full power. The minimum decay time for the previously offloaded fuel is taken to be 15 months. A cooling system configuration assumed a single active SFP cooling system component failure at the time of maximum heat load which is at the end of the full core offload.

A thermal overshoot is calculated for various cases to ensure that the SFP temperature at the end of the offload with the thermal overshoot does not exceed the temperature limit of 150 °F.

A thermal overshoot of 27.7 °F is determined to bound the following full-core offload cases (additional information in Table 9.1-8a):

1. Initiating offload at 95 hours after reactor shutdown with a CCW temperature of equal to or less than 95 °F at an average offload rate of 6 assemblies per hour.

2. Initiating offload at 110 hours after reactor shutdown with a CCW temperature of equal to or less than 100 °F at an average offload rate of 6 assemblies per hour.

The procedural upper limit for SFP bulk temperature will be set at ≤122°F, so that the maximum bulk temperature, with the failure of one train of SFP cooling will not exceed 150 °F.

All connections to the fuel pool are made so as to preclude the possibility of siphon draining of the fuel pool. Any leakage from the fuel pool cooling system is detected by reduction in the fuel pool inventory. Makeup to the fuel pool is from the refueling water tank. Makeup inventory to the fuel pool is provided in Subsection 9.1.3.3.1.

Unacceptable levels of radioactivity to maintenance personnel are not encountered from the spent fuel pool while a heat exchanger is undergoing repairs. The fuel pool heat exchanger is enclosed in a separate room from the fuel pool inventory. This design feature assures that maintenance personnel are not subjected to unacceptable levels of radioactivity. During such repair, radiation levels in the fuel pool area are monitored continuously and access to this area is regulated accordingly.

Following a SIAS, the Fuel Pool Cooling Subsystem is isolated from the Component Cooling Water System. However, multiple sources (seismic and non-seismic) of makeup water exist as discussed in Subsection 9.1.3.3.1.

The purification loop normally runs intermittently during fuel pool operation to maintain the fuel pool water purity and clarity. It is possible to operate the purification system with either the fuel pool ion exchanger or fuel pool filter bypassed. Local sample points are provided to permit

analysis of fuel pool ion exchanger and fuel pool filter efficiencies. A temporary portable filter/vacuum is also available to aid in fuel pool cleanup and improve water clarity.

9.1.3.3.1 Makeup System for Spent Fuel Pool

The spent fuel pool is a seismic Category I structure. It is designed to accommodate severe natural phenomena including the safe shutdown earthquake (SSE) and the design basis tornado without loss of function. For the loading combinations associated with these natural phenomena the stress levels are within the elastic limits of the materials.

A leak detection system is described in Subsection 9.1.2.2.

The fuel pool is provided with a seismic Category I Fuel Pool Cooling System to maintain temperature within acceptable limits. In the unlikely event there is a complete loss of cooling, the spent fuel pool bulk water temperature will begin to rise and will eventually reach the boiling temperature. An analysis was performed to determine the minimum time-to-boil and the maximum boil-off rate. The full-core offload scenario is the most limiting case and resulted in a minimum time, from loss-of-pool cooling at peak temperature until the spent fuel pool boils based on the heat load for the full-core offload scenarios, of 3.64 hours with a corresponding maximum boil off rate of 81.34 gpm. EC291265

Redundant spent fuel pool water level and temperature devices alarm in the control room should a loss of fuel pool cooling occur. Two permanent fuel pool inventory makeup systems are provided. The fuel pool purification pump draws water from the refueling water tank (RWT) at a flow capacity of 150 gpm. In addition, the primary water pumps, with suction from the primary water tanks, provide makeup to the fuel pool at 100 gpm. These makeup systems are designed as non-safety- related and designated non seismic. In addition to these permanent makeup systems, water inventory sources (e.g., city water storage tank, condensate storage tank, demineralized water tank, Steam Generator Blowdown System Monitor Storage Tanks and St. Lucie Unit 1 primary water storage and refueling water storage tanks), in excess of three million gallons are available onsite, which could be utilized for fuel pool makeup. These additional water sources could supply fuel pool makeup for more than 40 days at the maximum water boil-off rate without any makeup to these sources.

A seismic Category I backup system is also available for fuel pool makeup. A hose connection is provided on each seismic intake cooling water header. A seismic standpipe is provided in the Fuel Handling Building from grade to the operating deck elevation. The Intake Cooling Water System via the hose connections can provide flow in excess of the 54 gpm required for an indefinite period of time. EC291265

The seismic standpipe backup system would introduce salt water to the fuel pool. The salt water does not affect the integrity of the spent fuel pool leakage barrier. The rate of corrosion of the stainless steel liner is dependent on the oxygen content of the water. At boiling temperatures, the oxygen content of water is extremely low thereby greatly reducing the stress corrosion.

Sea water does not result in unacceptable corrosion of the Zircaloy-4 fuel cladding or structural components. It is unlikely that any localized corrosion cracking can result in a loss of structural integrity of these components. Should sea water be introduced to the fuel pool, fuel elements would be inspected.

9.1.3.3.2 Dilution of the Spent Fuel Pool

In conformance with the methodology described in Reference 13, a boron dilution analysis of the spent fuel pool was performed to ensure that sufficient time is available to detect and mitigate any unanticipated reduction in the fuel pool boron concentration. Potential plant initiating events were identified along with the quantity of water available for dilution in each scenario.

This analysis was provided to the NRC as part of the license amendment request.

Based on the criticality analysis described in Reference 12, FPL determined that a soluble boron concentration of 500 parts per million (ppm) was required to maintain k_{eff} at or below 0.95. Deterministic dilution event calculations were performed for Unit 2 to define the dilution times and volumes necessary to dilute the SFP from a minimum boron concentration of 1900 ppm to a soluble boron concentration of 500 ppm for a conservative spent fuel pool water inventory of 300,070 gallons.

Assuming a well-mixed pool, the volume required to dilute the SFP from 1720 ppm to 520 ppm was determined to be 358,959 gallons. The various events that were considered included dilution from the primary water system, fire protection system, component cooling water system, intake cooling water system, demineralized water system, service water system, and other events that may affect the boron concentration of the pool, such as a seismic event, pipe break, and loss of offsite power.

The boron dilution analysis concluded that an unplanned or inadvertent event that would dilute the SFP boron concentration from 1720 ppm to 520 ppm is not credible for St. Lucie Unit 2. In the Reference 14 Safety Evaluation, the NRC concluded;

> ...that the combination of the large volume of water required for a dilution event, the TS- controlled SFP concentration and 7-day sampling requirement, and plant personnel rounds would adequately detect a dilution event prior to k_{eff} reaching 0.95 (520 ppm) and, therefore, the analysis and proposed technical specification controls are acceptable for the boron dilution aspects of the [license amendment] request.
>
> Additionally, the criticality analysis for the spent fuel storage pool show that k_{eff} would remain less than 1.0 at a 95/95 probability/confidence level even if the pool were completely filled with unborated water. Therefore, even if the spent fuel storage pool were diluted to zero ppm, the spent fuel is expected to remain subcritical.
>
> For EPU, the SPF Technical Specification boron concentration was increased to 1900 ppm, while a bounding lower value of 500 ppm was utilized for the boron dilution analysis. Since the processes and programs previously accepted by the NRC are unchanged and the SFP initial boron concentration is increased from 1720 ppm to 1900 ppm for EPU, the dilution analysis previously prepared using 1720 ppm as the SFP initial boron concentration remains bounding for EPU operation.

9.1.3.4 Inspection and Testing Requirements

Each component is inspected and cleaned prior to installation into the Fuel Pool System. Demineralized water is then used to flush the entire Fuel Pool System. The Fuel Pool System is

operated and tested initially with regard to flow paths, flow capacity, and mechanical operability. Instruments are calibrated and alarm functions are checked for operability and setpoints established during testing.

Normal system status is monitored remotely via permanently installed instrumentation. Fuel pool water quality is maintained based on routine sample analysis. Prior to and throughout the refueling process, when the heat load and clean-up requirements are maximum, system parameters are monitored, as appropriate, to ensure proper system performance and compliance with administrative limits. The components of the fuel pool system are in either continuous or intermittent use during normal plant operation, thus no additional periodic testing is required.

9.1.3.5 Failure Modes and Effects-Analysis

The failure modes and effects analysis is shown in Table 9.1-9.

9.1.4 FUEL HANDLING SYSTEM

The Fuel Handling System consists of the refueling machine, the fuel transfer equipment, spent fuel handling machine, containment polar crane, cask handling crane, new fuel handling crane and the new fuel elevator. The general arrangement of the Fuel Handling System is shown in Figures 9.1-7 and 9.1-7a.

The spent fuel pool is provided with a spent fuel pool cooling and cleanup system which is discussed in Subsection 9.1.3.

9.1.4.1 Design Bases

9.1.4.1.1 System

The Fuel Handling System is designed for handling and storage of fuel assemblies and control element assemblies (CEAS) and for the required assembly, disassembly, and storage of reactor internals and the reactor vessel closure head. The fuel handling equipment includes interlocks, travel limiting features, and other protective devices to minimize the possibility of mishandling or equipment malfunction that could result in inadvertent damage to a fuel assembly and potential fission product release.

St Lucie Unit 2 conforms to the guidelines of Section 5.1.1 of NUREG-0612.

All spent fuel transfer and storage operations are designed to be conducted underwater to ensure adequate shielding during refueling and to permit visual control of the operation at all times.

9.1.4.1.2 Fuel Handling Equipment

9.1.4.1.2.1 Fuel and CEA Handling Equipment

The principal design criteria for the fuel and CEA handling equipment (refueling machine, fuel transfer equipment, spent fuel handling machine, new fuel handling crane, and new fuel elevator exclusive of the containment polar crane and cask handling crane) are:

a. The bridges, trolleys, hoist units, hoisting cable, grapples, and hooks conform to the requirements of Crane Manufacturing Association of America Specification No. 70. (CMAA Specification No. 74 for new fuel handling crane). All other components meet the requirements of Manual of Steel Construction, American Institute of Steel Construction.

b. For seismic design, the combined dead loads, live loads, and safe shutdown earthquake (SSE) seismic loads do not cause any portion of the equipment to disengage from its mountings or fail in a manner that would result in its falling into the refueling canal or spent fuel pool.

c. Grapples and mechanical latches that carry fuel assemblies or CEAs are mechanically interlocked against inadvertent opening.

d. Equipment is provided with locking devices or restraints to prevent parts, fasteners, or limit switch actuators from becoming loose. In those cases where a loosened part or fastener can drop into, or is not separated by a barrier from, or whose rotary motion may propel it into the water of the refueling pool or spent fuel pool, these parts and fasteners are lockwired or otherwise positively captured.

e. A positive mechanical stop prevents the fuel from being lifted above the minimum safe water cover depth and does not cause damage or distortion to the fuel or the refueling machine when engaged at full operating hoist speed.

f. The fuel hoists (except new fuel handling crane and new fuel elevator) are provided with load measuring devices and interlocks to interrupt hoisting if the load increases above the overload setpoint and interrupt lowering if the load decreases below the underload setpoint.

g. In the event of loss of power, the equipment and its load remain in a safe condition.

h. Interlocks are provided to ensure the readiness of system components, to simplify the performance of sequential operations, and to limit travel and loads such that design conditions are not exceeded. No single interlock failure (except Spent Fuel Handling Machine) results in a condition that allows equipment malfunction, damage to the fuel, or reduces shielding water coverage. Redundant switches, mechanical restraints and physical barriers are employed, as well as limiting the hoist stall torque and loading capability to values which afford protection to the fuel (Reference 11).

9.1.4.1.2.2 Containment Polar Crane and Cask Handling Crane

The principal design criteria for the containment polar crane and cask handling crane are as follows:

a. For normal operating conditions, the bridges, trolleys, hoist units, hoisting cables and hooks conform to flip requirements of Crane Manufacturing Association of America Specification #70. All other components meet the requirements of "Manual of Steel Construction," American Institute of Steel Construction.

b. The primary stresses induced by the operating basis earthquake combined with dead loads are maintained within the maximum allowable combined stresses permitted under the Crane Manufacturing Association of America Specification #70, Florida State Regulations, South Florida Building Code or 90 percent of the allowable stresses stated in the AISC Code, whichever governs. The primary stresses induced by the safe shutdown earthquake combined with dead loads do not exceed 90 percent of the yield stress.

c. The containment polar crane and the cask handling crane are designed seismic Category 1.

d. For seismic design, the combined dead loads and seismic loads do not cause any portion of the equipment to disengage from its supports. The dead loads and seismic loadings are combined in calculating material stress.

e. The crane assemblies and their supports are designed to safely withstand horizontal seismic loads acting simultaneously with vertical seismic loads. Vertical seismic loads are considered to act upward or downward to give the most severe combination.

f. The containment polar crane main hook is provided with load measuring device.

g. The containment polar crane and its components are vented or designed to withstand the 50 psig containment test pressure with the exception of VFD units. EC292136

h. In the event of loss of power, the cranes and their loads remain in a safe condition.

i. A main hook capacity of 200 tons and an auxiliary hook capacity of 60 tons are provided for the containment polar crane. The primary function of the polar crane is to remove the reactor vessel head and place it in its stored position.

j. A main hook capacity of 150 tons and an auxiliary hook capacity of 25 tons are provided for the cask handling crane. The primary function of the cask handling crane is the transportation of the spent fuel cask between the cask pit, cask handling facility and the transfer vehicle. The movement of the cask handling crane is restricted by physical design, so that it can not carry the cask over any part of the fuel pool. The maximum load which may be handled by the spent fuel cask crane shall not exceed 150 tons.

9.1.4.2 System Description

9.1.4.2.1 System

The Fuel Handling System is an integrated system of equipment, tools, and procedures for refueling the reactor. The system provides for handling and storage of fuel assemblies from receipt of new fuel to shipping of spent fuel. The equipment is designed to handle the spent fuel underwater from the time it leaves the reactor until it is placed in a cask for shipment from the site. Underwater transfer of spent fuel provides a transparent radiation shield, as well as a cooling medium for removal of decay heat. Boric acid is added to the water in the quantity required to ensure subcritical conditions during refueling.

Major components of the system are the refueling machine, the fuel transfer equipment, the spent fuel handling machine, the new fuel elevator, the new fuel crane, containment polar crane, and the cask handling crane. The refueling machine moves fuel assemblies into and out of the core and between the core and the transfer equipment. The fuel transfer equipment moves the fuel between the containment and the fuel handling building through the transfer tube. The spent fuel handling machine moves fuel between the transfer equipment, the fuel storage racks in the spent fuel pool, the spent fuel transfer cask and the new fuel elevator.

Special tools and lifting rigs are also used for disassembly of reactor components and are included in the refueling system. Major tools and servicing equipment required for refueling are listed in Table 9.1-10.

Major components of the fuel handling system are shown in Figures 9.1-7 and 9.1-7a and are described below. The seismic category, quality group, design codes, and standards used for design, manufacture, testing, maintenance, and operation for these principal components are listed in Table 9.1-11.

Mechanical stops and positive locks are provided to prevent damage to, or dropping of, the fuel assemblies. The following identifies and defines the function of the electrical interlocks contained in the fuel handling equipment. The failure of an electrical interlock does not result in the dropping of a fuel assembly.

9.1.4.2.1.1 Refueling Machine

The following identifies and describes the functions of the interlocks contained in the refueling machine.

a. Refueling Machine Hoist Interlocks

1) Interrupts hoisting of a fuel assembly if the load increases above the overload setpoint. The hoisting load is visually displayed so that the operator can manually terminate the withdrawal operation if an overload occurs and the hoist continues to operate. The hoist motor stall load is less than the allowable fuel assembly tensile load (Reference 11).

2) Interrupts hoisting of a fuel assembly when the correct vertical position is reached. A mechanical up-stop is also provided to physically restrain the hoisting of a fuel assembly above the elevation that would result in less than the minimum shielding water coverage.

3) Interrupts insertion of a fuel assembly if the load decreases below the underload setpoint. The load is visually displayed so that the operator can manually terminate the insertion operation if an underload occurs and the hoist continues to operate.

4) Interrupts lowering of the hoist under a no-load condition when a load weighing system cable slack occurs. The weighing system interlock is backed up by redundant and independent frame mounted slack cable switch that terminates lowering under a no-load condition.

5) Denies hoisting if either of the bridge and/or trolley drives are energized.

b. Refueling Machine Translation Interlock

1) Denies translation of the bridge and trolley while the fuel hoist is operating.

2) Denies motion of the bridge and/or trolley with the spreader or grapple extended. The underwater TV system can be used by the operator to determine whether the spreader or grapple has been raised, and lights on the control console indicate whether they are withdrawn or extended.

3) Denies translation of bridge and trolley while a grappled fuel assembly is suspended so that any portion of the assembly is located below the bottom of the fuel hoist box while in the core area.

c. Refueling Machine Mast Anticollision Interlock

Stops translation of the bridge and/or trolley when the collision ring on the mast is contacted and deflected.

Redundant switches are provided to minimize the possibility of interlock becoming inoperative, and slow bridge and trolley speeds are mandatory for movement of the refueling machine in areas other than its normal level route which might contain obstructions. Travel limits also restrict running the mast into the pool wall.

d. Refueling Machine Hoist Speed Interlock

Provides restriction on maximum hoisting speed.

During insertion and withdrawal, the change in hoist speed can be monitored by observation of the hoist vertical position indicator.

9.1.4.2.1.2 Transfer System

The following identifies and describes the functions of the interlocks contained in the transfer system.

a. Transfer System Winch Interlocks

1) Terminates winching of the fuel carriage through the transfer tube if the load increases above the overload setpoint. The winching load is visually displayed on the Rx side Transfer Console so that the operator can manually terminate the transfer operation if an overload occurs and the interlock fails. An overload is indicated by a Cable Overload light on both consoles and by an audible alarm.

2) Prevents the winch from attempting to pull the fuel carriage through the transfer tube unless both upenders are in a horizontal position.

b. Transfer System Upender Interlocks

1) Denies rotation of the Rx upender while the refueling machine is at the upender station with the refueling machine hoist at Full Up, and spreader retracted. Also, denies the rotation of the pool upender with the spent fuel handling machine at the pool upender station unless the spent fuel handling machine loaded hoist is at Full Up, or the unloaded hoist is in the near full down zone (the area where the grapple is above the height of the basket and there is not an interference).

2) Denies rotation of the upender unless the fuel carrier is correctly located for upending.

c. Transfer Tube Valve Interlock

Contacts are provided in the control system of the transfer system which, when connected to a limit switch on the transfer tube valve, prevents movement of the fuel carrier unless the valve is fully opened.

9.1.4.2.1.3 Spent Fuel Handling Machine

The following identifies and describes the functions of the interlocks that are part of the spent fuel handling machine.

a. Spent Fuel Handling Machine Hoist Interlocks

1) Interrupts hoisting if the load increases above the overload setpoint.

2) Interrupts hoisting if the load decreases to cable slack.

b. Spent Fuel Handling Machine Translation Interlocks

1) Provides speed restriction on bridge and trolley translation unless the load is in the full up position, at which time fast speed is allowed.

2) Protects, by means of Encoder Boundary System, against running the load into walls or the gate of the storage area.

9.1.4.2.1.4 CEA Change Mechanism

(Deleted.)

9.1.4.2.1.5 New Fuel Elevator

The following identifies and describes the functions of the interlocks that are part of the new fuel elevator.

a. New Fuel Elevator Hoist Interlocks

Stops the elevator motor should the cable become slack.

Prevents raising of the elevator with a fuel assembly in the elevator box. This interlock is a backup for the administrative control, which precludes the placement of a spent fuel assembly in the new fuel elevator.

9.1.4.2.1.6 New Fuel Handling Crane

The following identifies and describes the functions of the interlocks that are part of the new fuel handling crane.

a. New Fuel Handling Crane Interlocks

   Prevents operation of the crane bridge drive while the bridge girder is interlocked with the monorail spur. Prevents, by means of a travel limit interlock, contact between the crane and the observation platform at elevation 85 feet.

b. New Fuel Handling Crane Hoist Interlock

   Prevents overtravel of the hoist.

9.1.4.2.1.7 Cask Handling Crane

The following describes the functions of the interlocks that are part of the cask handling crane:

a. Cask Bridge and Trolley Interlock Keyswitch

   Prevents any bridge or trolley movement, by means of a key switch from the crane cab or remote radio transmitter, allowing Main and Auxiliary hoist operation only.

b. Cask Pit Area Lockout Keyswitch

   Prevents any hook movement over the entire cask pit area when there is a fuel stored in the cask pit. The keyswitch is under the administrative control of the Control Room operator.

c. Control Location Selector

   Transfers control of the crane between the cab and the remote radio transmitter via a selector switch locate in the crane cab.

d. Bridge Stop Limits

   Prevents bridge from exceeding end-of-travel limits.

e. Trolley Stop Limits

   Prevents trolley from exceeding end-of-travel limits.

f. Crane Restricted Handling Path Keyswitch and Limit Switches

   Prevents transporting of the cask inside the fuel handling building over areas other than the cask pit, using limit switches on the bridge and trolley, and a keyswitch to enable crane movement through the L-shaped door. The movement path of the Main Hoist hook through the L-shaped door is restricted to

a corridor approximately one foot east or west of the centerline of the door opening, and the hook cannot move further south than a point approximately 7'-0" north of column line 2-FH3.

g. Hoist Overtravel Limits (Main and Auxiliary Hoists)

Prevents overtravel of the hoist in both the high and low directions. For the Main Hoist, overtravel in each direction is prevented by redundant limit switches at different settings.

h. Overload Limits (Main and Auxiliary Hoists)

Prevents sustained lifting in excess of rated capacity.

9.1.4.2.1.8 Containment Polar Crane

The following identifies and describes the functions of the interlocks that are part of the containment polar crane.

a. Containment Polar Crane Trolley Stop Limits

Prevents trolley from exceeding end-of-travel limits.

EC292136

b. Containment Polar Crane Hoist Overtravel Limits (Main and Auxilary hoists)

Prevents overtravel of hoist in both the high and low directions.

c. Containment Polar Crane Control Station Interlock

Prevents simultaneous operation of the crane from the pendant control station and the radio control for remote wireless operation.

d. Containment Polar Crane Trolley Bypass Switch

Allows trolley to travel past limit for certain applications.

e. Containment Polar Crane Main Host Bypass Switch

Allows main hoist to travel past lower limit for certain applications.

9.1.4.2.2 Components

9.1.4.2.2.1 Refueling Machine

The refueling machine is shown on Figure 9.1-8. The refueling machine is a traveling bridge and trolley located above the refueling pool and rides on rails set in the concrete on each side of the refueling pool. Motors on the bridge and trolley position the machine over each fuel assembly location within the reactor core or the fuel transfer carrier. The hoist assembly and grappling device are raised and lowered by a cable attached to the hoist winch. After the fuel assembly has been raised into the refueling machine, the refueling machine transports the fuel assembly to its designated location.

Controls for the refueling machine are mounted on a console located on the refueling machine trolley. Coordinate location of the bridge and trolley is indicated at the console by digital readout devices driven by encoders coupled to the guide rails through rack and pinion gears.

During withdrawal or insertion of a fuel assembly, the load cell shall be continuously monitored to ensure that movement is not being restricted. Limits are such that specified loads are not exceeded.

Locking between the grapple and the fuel assembly is maintained by the engagement of the grapple actuator arm in axial channels running the length of the fuel hoist assembly. Therefore, it is not possible to uncouple from the fuel assembly even with an inadvertent initiation of an uncoupling signal to the actuator assembly. The drives for both the bridge and the trolley provide close control for accurate positioning, and brakes are provided to maintain the position once achieved. In addition, interlocks are installed so that movement of the refueling machine is not possible when the hoist is withdrawing or inserting an assembly.

For operations at the core, the bottom of the hoist assembly is equipped with a spreading device to align the surrounding fuel assemblies to their normal core spacing to ensure clearance for fuel assemblies being installed or removed. An anticollision device at the bottom of the mast assembly prevents damage should the mast be inadvertently driven into an obstruction, and a positive mechanical up-stop is provided to prevent the fuel from being lifted above the minimum safe water cover depth. A system of pointers and scales serves as a backup for the remote positioning readout equipment.

Manually-operated handwheels are provided for bridge, trolley, and winch motions in the event of a power loss. Manual operation of the grappling device is also possible in the event that air pressure is lost.

The refueling machine is equipped with a 1 ton removable auxiliary monorail hoist. This hoist provides lifting capability for equipment and tool handling in the containment during refueling operations, thus freeing the 200 ton polar crane for required heavy lifting service. It is not used for fuel transfer and does not perform any safety related function.

Although removable, the hoist support structure remains in place during plant operation and therefore has been designed for the appropriate seismic loads listed in Chapter 3. In addition, a confirmatory structural analysis of the refueling machine, considering the effect of the additional mass imposed by the auxiliary hoist and support structure has been performed to ensure the structural integrity of the refueling machine under seismic conditions.

9.1.4.2.2.2 Fuel Transfer System

A fuel carriage, as shown on Figure 9.1-7, conveys the fuel assemblies through the transfer tube. Two fuel assembly cavities are provided in the fuel carriage and may be used in some refueling evolutions to reduce overall fuel bundle handling time. After the refueling machine deposits a spent fuel bundle in the open cavity, it only has to move approximately one foot to pick up, if desired, the new fuel assembly which was brought from the Fuel Handling Building in the other cavity. The handling operation in the Fuel Handling Building is similar. Use of the dual cavity arrangement permits both fuel handling machines to travel fully loaded at all times. Fuel assemblies are placed on the transfer carriage in a vertical position, lowered to the horizontal position, moved through the fuel transfer tube on the transfer carriage, and then restored to the vertical position.

Wheels support the carriage and allow it to roll on tracks within the transfer tube. The track sections at both ends of the transfer tube are mounted on the upending machines to permit the carriage to be properly positioned at the limits of its travel. The carriage is driven by steel cables connected to the carriage and through sheaves to its driving winch mounted on the operating floor of the Reactor Building.

The load on the transfer cables is displayed at the master control console. An overload interrupts the transfer operation. Manual override of the overload cutout allows completion of the transfer. The supports for the replaceable rails on which the transfer carriage rides are welded to the 36 inch diameter transfer tube. The rail assemblies are fabricated to a length that allows them to be lowered for installation in the transfer tube.

An upending machine, as shown on Figure 9.1-7, is provided at each end of the transfer tube. Each consists of a structural support base from which is pivoted an upending straddle frame that engages the two-pocket fuel carrier. When the carriage with its fuel carrier is in position within the upending frame, the pivots for the fuel carrier and the upending frame are coincident. Hydraulic cylinders, attached to both the upending frame and the support base, rotate the fuel carrier between the vertical and horizontal position as required by the fuel transfer procedure. Each hydraulic cylinder can perform the upending operation alone and can be isolated in the event of its failure. A long tool is also provided to allow manual rotation of the fuel carrier in the event that both cylinders fail or hydraulic power is lost.

A fuel transfer tube extends through the containment wall. During reactor operation, the transfer tube is sealed by means of a blind flange located inside the containment. Prior to filling the refueling pool, the blind flange is removed. After a common water level is reached between the refueling pool and the spent fuel pool, the transfer tube valve is opened.

The sequence is reversed after refueling is completed.

The 36 inch diameter transfer tube is contained in a 48 inch diameter penetration that is sealed to the containment. The transfer tube and penetration sleeves are sealed to each other by welding rings and bellows-type expansion joints.

The transfer tube valve is attached to the spent fuel pool end of the transfer tube. The manual operator for the valve is designed to allow for movement of the valve due to thermal expansions and still permit operation. The valve stem extends above the spent fuel pool water level and is designed for manipulation from the operating floor of the Fuel Handling Building.

9.1.4.2.2.3 CEA Change Mechanism

(Deleted)

9.1.4.2.2.4 Fuel Handling Tools

Two fuel handling tools, as shown on Figure 9.1-10, are used to move fuel assemblies in the spent fuel pool area. A short tool is provided for dry transfer of new fuel, and a long tool is provided for underwater handling of both spent and new fuel in the spent fuel pool. The tools are operated manually.

9.1.4.2.2.5 Reactor Vessel Head Lifting Rig

The reactor vessel head lifting rig is shown on Figure 9.1-11.

This lifting rig, used in conjunction with the polar crane, is composed of a removable three-part lifting frame and a three-part column assembly attached to the reactor vessel closure head. The column assembly supports the three hoists for handling the hydraulic tensioners, the studs, washers, and nuts, and links the lifting frame with the reactor vessel head.

9.1.4.2.2.6 Reactor Internals Handling Equipment

Separate lifting rigs are used to remove either the upper guide structure or the core support barrel from the reactor vessel.

The core support barrel lifting rig, shown on Figure 9.1-12, is provided to withdraw the core support barrel from the vessel for inspection purposes. The upper clevis assembly is a tripod-shaped structure connecting the lifting rig to the containment crane lifting hook. The lifting rig includes a spreader beam providing three attachment points that are threaded to the core support barrel flange. This is accomplished manually from the refueling machine bridge. Correct positioning of the lifting rig is assured by attached guide bushings that mate to the reactor vessel guide pins.

The upper guide structure lifting rig is shown on Figure 9.1-13. The lifting rig consists of a delta spreader beam that supports three columns providing attachment points to the upper guide structure. Attachment to the upper guide structure is accomplished manually from the working platform. The integral incore instrumentation hoist connects to an adaptor that is manually attached to the incore instrumentation support plate. The incore instrumentation is then lifted by the crane hook. The upper clevis assembly which is suitable for lifting either the upper guide structure or the core support barrel is installed prior to lifting of the structure by the crane hook. The tripod assembly is a hinged (knuckled) design that allows the tripod to fold down when the lifting shackle is lowered to its rest position such that a three inch minimum clearance is maintained between the tripod's lifting shackle and the refueling machine. Correct positioning is assured by attached bushings that mate to the reactor vessel guide pins.

9.1.4.2.2.7 Spent Fuel Handling Machine

The spent fuel handling machine, as shown on Figure 9.1-14, is a traveling bridge and trolley that rides on rails over the spent fuel pool, fuel transfer pool and cask loading pit. Motors on the bridge and trolley position the machine over the spent fuel assembly storage racks, the new fuel elevator, the upending machine, and fuel transfer cask. An overhead crane is used to transfer new fuel from the new fuel storage racks to the new fuel elevator. The spent fuel handling machine hoist is provided with a long handling tool which engages the fuel assembly to be moved. Once the fuel assembly is grappled, the cable and hoist winch raise the fuel assembly. The machine then transports the fuel assembly from the upending machine to the spent fuel storage racks (spent fuel), from the new fuel elevator to the upending machine (new fuel), or from the spent fuel storage racks to the fuel transfer cask.

The controls for the spent fuel handling machine are mounted on a console located on the spent fuel handling machine trolley.

Coordinate location of the bridge is indicated at the console, and the trolley position is indicated by a pointer and target system.

During withdrawal or insertion of a fuel assembly, the load on the hoist cable is monitored to ensure that movement is not being restricted. Overload and underload setpoints are provided to interrupt hoist operation at preassigned levels of cable load, thereby protecting fuel assemblies during hoisting operations.

Positive locking is provided between the grappling device and the fuel assembly to prevent inadvertent uncoupling. The drives for both the bridge and the trolley provide close control for accurate positioning, and brakes are provided to maintain the position once achieved. In addition, interlocks are installed so that movement of the spent fuel handling machine is not possible when the hoist is withdrawing or inserting an assembly.

Manually-operated handwheels are provided for bridge, trolley, and winch motions in the event of a power loss.

9.1.4.2.2.8 New Fuel Elevator

A fuel elevator, as shown on Figure 9.1-15 is utilized to lower new fuel from the operating level to the bottom of the refueling canal where it is grappled by the spent fuel handling machine. The elevator is powered by a cable winch and fuel is contained in a simple support structure whose wheels are captured in two rails. New fuel is loaded into the elevator by means of the monorail spur from the new fuel handling crane. In addition, the new fuel elevator may be used to facilitate removal of blocking bars from certain Region I L-inserts prior to their reinsertion in the Unit 2 spent fuel storage racks.

9.1.4.2.2.9 Underwater Television

A closed circuit television (CCTV) system may be used to monitor the fuel handling operations inside the containment. The camera is mounted so that the fuel assembly can be sighted prior to and during grappling and removal from the core. A portable monitor is used to view the CCTV image. The camera, if required for remote surveillance or for inspection, can be removed from its mount and handled seperately.

9.1.4.2.2.10 Dry Sipping Equipment

(Deleted)

9.1.4.2.2.11 Hydraulic Power Unit

The hydraulic power unit, as shown on Figure 9.1-19, provides the motive force for raising and lowering the upender with the fuel carrier. It consists of a stand containing a motor coupled to a hydraulic pump, a pump reservoir, valves, and the necessary hoses to connect the power package to the hydraulic cylinders on the upender. The valves can be aligned to actuate either or both upender cylinders. The hydraulic fluid is demineralized water.

9.1.4.2.2.12 Refueling Pool Seal

The annulus between the reactor vessel seal ledge and the embedment ring of the Reactor cavity is sealed during refueling by the use of the Permanent Reactor Cavity Seal Ring (PCSR). The PCSR (Figure 9.1-20) serves as a watertight seal to hold the refueling water above the reactor vessel and prevents it from leaking into the reactor cavity annulus. It is a permanent stainless steel ring that is welded to the reactor vessel seal ledge and to the embedment ring of

the Reactor cavity. The PCSR contains hatches which remain open during plant operation but are closed prior to fil ling the refueling cavity. There is also a permanent Neutron Shield installed in the reactor cavity below the PCSR that reduces neutron and gamma ray radiation dose rates but does not function to seal the refueling cavity. The PCSR is a Quality Related Seismic Component.

Provisions are made to test the hatch cover O-rings prior to filling the Reactor Cavity. Leak rate is monitored during refueling to assure that no sudden change in water level will occur unnoticed.

9.1.4.2.2.13 Gripper Operating Tool

This tool basically consists of two concentric tubes. The outer tube (holding tool cone assembly) is equipped with a funnel at the lower end to facilitate engagement with the CEA extension shafts. The inner tube (plunger operating tool assembly) is manipulated to engage the magnet housing and uncouple the CEA extension shaft.

9.1.4.2.2.14 Cask Handling Crane

The 150-ton capacity cask handling crane main hoist is used to handle spent fuel casks between the cask pit area adjacent to the spent fuel pool and the cask handling facility and access road. The crane, including its steel support structure and runway, was replaced in 2003 in order to upgrade the crane to a single-failure-proof design. The crane is an overhead, multiple girder, top running bridge crane, with a top running trolley. The crane bridge, trolley, and support superstructure are located outdoors, at the north end of the fuel handling building (FHB), where the crane can access the FHB interior through an opening in the roof and north wall normally covered by an L-shaped door. The crane runway girders are supported by a steel frame structure, with some of the structural columns supported by the FHB roof and the remaining columns supported on concrete foundations at grade elevation. Both the superstructure and crane are designed seismic Category I and can withstand tornado forces.

The crane's load-bearing components are designed as part of a single-failure-proof load handling system, in particular the hoisting and braking subsystems. The design complies with the ASME NOG-1, Rules for Construction of Overhead and Gantry Cranes -1998 including May 3, 2000 addenda and CMAA #70-2000, Specifications for Electric Overhead Traveling Cranes. The design also implements the regulatory guidance for single-failure-proof cranes in NUREG-0554, Single-Failure-Proof Cranes for Nuclear Power Plants and NUREG-0612, Control of Heavy Loads at Nuclear Power Plants.

As a single-failure-proof crane, a single failure of a crane load-bearing component will not result in the loss of the crane's capability to safely retain the load. However, not all load-bearing components of the crane are assumed to be susceptible to a single failure. Some passive load-bearing items such as girders are conservatively designed with a sufficient safety factor that a failure of these components is not assumed. The remaining load-bearing components (e.g., the ropes, reeving system, and braking system) are redundant such that a single component failure will not result in a load drop event. Because of these design features, the potential for a cask drop event is considered extremely small for St. Lucie Unit 2.

The cask handling crane trolley has two hoists. The main hoist is rated at 150 tons, and meets NUREG-0554 guidelines for single-failure-proof handling systems. The main hoist will be used for load handling inside the FHB, and to transfer spent fuel casks between the FHB and the

outside. The auxiliary hoist is rated at 25 tons, and is of a conventional design (not single-failure-proof). The auxiliary hoist is available for handling loads outside the FHB, but will not handle loads either inside or above the FHB. Based on Section 5.1.2 of NUREG-0612, use of a single-failure-proof crane for cask handling in the FHB avoids the need to analyze for a cask drop in the vicinity of the spent fuel pool.

9.1.4.2.2.15 New Fuel Handling Crane

A five ton capacity underhung single girder bridge crane is provided to handle new fuel in the Fuel Handling Building. The crane transports new fuel assemblies between the shipping containers, the new fuel storage racks and the new fuel elevator.

The crane is capable of raising, lowering, holding in any position, and transporting any load from 0 to 100 percent of rated capacity without damage or distortion to any part of the crane.

Crane motions have the following approximate speeds under full rated capacity:

a. Hoisting and lowering: 20 fpm with stepless speed control.

b. Bridge travel: 10 fpm and 30 fpm.

c. Trolley travel: 30 fpm with soft start control.

The crane is provided with a monorail spur for access to the new fuel elevator. An electric motor operated interlocking mechanism holds the crane in alignment with the spur, permitting movement of the trolley hoist from one to the other. When the crane and spur are disengaged, safety stops prevent the trolley hoist from rolling off the crane bridge or the monorail spur.

The crane is provided with a pendant pushbutton control suspended from the trolley hoist. A remote pushbutton is also provided.

Crane brakes are provided as follows:

a. Hoist travel: One self-actuating load brake and one self-actuating motor brake, each of which has sufficient capacity to support and hold the full rated load without power.

b. Bridge and trolley travel: Electrically released, spring-set brakes that set on loss of power and are capable of preventing movement of the bridge or trolley under the specified seismic loads.

9.1.4.2.2.16 Containment Polar Crane

A 200 ton capacity polar bridge crane is provided to handle the missile shield, the reactor head and the reactor internals during refueling operations.

The crane is capable of raising, lowering, holding in any position and transporting a test load of 125 percent of rated load without damage or distortion to any crane part. The crane and each hoist operate within the following tolerances:

a. With hook carrying 100 percent of rated load and with all hoist brakes properly adjusted and operating normally, it is possible to control the vertical movement to within 1/8 inch.

b. Motion of bridge and trolley is controllable to within 1/4 inch under all normal and overload conditions of loading.

Crane brakes are provided as follows:

a. Bridge Travel: Electrically released, spring-set friction-shoe typebrake, capable of stopping the crane traveling at full speed under full load. Brake capacity is at least equal to the rated breakdown torque of drive motor. Brake is set when motor controller is in the "OFF" position, when main power supply switch is in "OFF" position, or in the event of power failure.

b. Trolley Travel: Electrically released, spring-set, friction-shoe type brake with capacity equal to 50 percent of operating torque of the trolley drive. Trolley brakes provide soft stop, thus limiting the load (hook) swing to a minimum. Brake operates when motor controller is in "OFF" position, or in the event of main power failure.

c. Hoist Travel: All hoists are provided with two electric stopping and holding brakes and one electrical hoist control device. Electric stopping and holding brakes for main and auxiliary hoists operate automatically and are of the electrically released, self-adjusting, spring-set friction-shoe type, capable of stopping and holding 1-1/2 times the full rated load when the power is off. One brake is mounted on the motor shaft and one is mounted on a shaft of the reducer assembly.

Electrical hoist control devices are variable frequency drives (VFDs), capable of controlling the lowering speed under all conditions with up to 1-1/2 times the rated load on the hook via dynamic braking units which utilize external resistor banks dissipating electric braking energy. Brakes are designed to prevent lowering of the load unless power is applied to hoist motor in a lowering direction. EC292136

Electric control equipment is mounted on bridge on panels and in metal cabinets to afford maximum protection to the operator and maintenance personnel.

The crane panels contain protective disconnect and overload devices, including the main disconnect switch with provisions for external operation, main contactor, overload relays for each motor circuit, and control circuit fuses. All equipment is mounted in a heavy gauge sheet steel enclosure with hinged doors. The same interlock prevents the switch from being closed until the doors are closed. The main contactor is reset and opened by the "START-STOP" pushbutton.

A ground fault detection system is provided which senses and provides both visual and audible warning of a ground fault within the control system.

The control for the main hoist is static stepless variable speed control over the full range of hoisting and lowering speeds. Control of the motor speed is accomplished by inverter driven EC292136

VFDs to provide distinct speed control by controlling the frequency of the electrical power supplied to the motor. Returning pushbutton controller to the "OFF" position reduces the motor reactor current to zero and simultaneously causes the electric load brake to regenerative braking energy from the motor to be dissipated in external resistor banks. Thus, the motor is retarded by the dynamic braking unit prior to the setting of the motor brake, thereby preventing overheating and excessive motor brake lining wear. EC292136

The VFD units are packaged in compact functional modules which are designed to provide protection against shock, vibration, and severe environments. EC292136

The control for the bridge and trolley motions is stepless reversing plugging providing variable regulated torque control for traverse motions. Control of acceleration is accomplished by inverter driven VFDs to provide distinct speed control by controlling the frequency of the electrical power supplied to the motor. The end result is that the motion rate of acceleration or deceleration is proportionally controlled by the operator. EC292136

The packaging and protection of the VFD units are similar to that provided for the hoist control. EC292136

A detailed description of the features of the containment polar crane is provided in Table 9.1-13.

9.1.4.2.3 System Operation

9.1.4.2.3.1 New Fuel Transfer

After arrival of the new fuel shipping containers, the container covers are removed and the fuel assembly strong-back raised to the vertical position and locked. The new fuel handling tool, attached to the new fuel handling crane, is then locked to the fuel assembly, the fuel assembly clamping fixtures removed, and fuel assembly removed from the shipping container. Next, the protective wrapping is removed and the fuel assembly is moved over to the new fuel storage racks where it is placed into its designated cavity. The tool is unlocked from the assembly and the operation repeated until all assemblies are placed in the racks.

Prior to or during reactor refueling operations, new fuel can be removed from the new fuel storage racks and transferred to the new fuel elevator using the new fuel handling crane and the new fuel handling tool.

The new fuel elevator lowers the fuel assembly to allow the spent fuel handling machine to transfer the fuel assembly to the upending mechanism. Interlocks are provided to prevent the spent fuel handling machine from lowering the fuel assembly unless the upender is in the vertical position. After a new fuel assembly has been placed in the upending mechanism, a spent fuel assembly, if present, is removed from the other position of the fuel carrier and transferred to a designated position in the spent fuel storage racks, using the spent fuel handling machine and the spent fuel handling tool. The upender interlocks may be bypassed using the New Fuel Receipt keyswitch when the new fuel is being moved to the storage racks and the upender is positioned to allow unrestricted access into the upender zone.

9.1.4.2.3.2 Spent Fuel Transfer

The spent fuel transfer cask is moved to the loading area that is serviced by a cask handling crane. The main hoist of the crane lifts the cask to the operating floor, and transfers the cask to

the Cask Handling Facility. After the fuel transfer cask is serviced and washed, it is transferred to the cask loading pit.

Positioning the fuel transfer cask into the cask pit is a two step hoisting operation governed by administrative controls as well as crane interlocks. The first hoisting step sets the cask on an intermediate ledge of the pit to interrupt the single lift over the full depth of the pool. The second hoisting step lowers the fuel transfer cask to the bottom of the cask pit.

The spent fuel handling machine transfers the assemblies from the storage racks to the spent fuel transfer cask. The cask loading area is connected to the pool by a gate sized to allow passage of a spent fuel assembly suspended from the spent fuel handling machine.

The spent fuel assemblies are then transferred underwater and loaded into the fuel transfer cask using the spent fuel handling machine. Removal of the fuel transfer cask from the cask loading pit is accomplished by a reversal of the two step hoisting operation described above.

The loaded cask is lifted to the Cask Handling Facility where potentially radioactive materials are removed. After the decontamination is complete, the spent fuel transfer cask is loaded on to the transporter for dry storage in the Independent Spent Fuel Storage Installation (ISFSI). See 1.2.2.9.

9.1.4.2.3.3 Refueling Procedure

During the cooldown, preparations are begun for the refueling operation. Reactor disassembly is initiated with the removal of the missile shield from over the reactor. The control equipment drive mechanisms (CEDMS) are disengaged from their drive shaft extensions by de-energizing the electromagnets, and the mechanism cabling is disconnected in preparation for head removal. Constraints on plant operation and maintenance activities to be performed prior to refueling during reduced RCS water level conditions are discussed in Section 5.1.4 and in Reference 9.1.17. The stud tensioners are employed to remove the preload on the vessel head studs. The nuts and studs are normally removed and plugs are installed to prevent refueling water from filling the empty stud holes. Two head alignment pins are inserted to assist in subsequent operations. The CEDM cooling shroud is disconnected from its duct work and the vessel vent line removed. The hatch covers of the Permanent Reactor Cavity Seal Ring are installed to provide a watertight seal ~such that the annulus between the reactor vessel seal ledge and the embedment ring of the Reactor cavity is closed, thus preventing water from entering the lower portion of the reactor cavity. The hatch covers are pressure tested prior to each use to ensure a leak tight seal.

The reactor vessel head is removed by the polar crane to its storage location. Using the refueling machine walkway as a work platform, the five-fingered CEA extension shafts are unlatched from the CEAs by means of a tool hung from the auxiliary hoist on the refueling machine. The upper guide structure (UGS) lift rig is then installed for four-fingered CEA withdrawal into the UGS and lifting of the incore instrumentation plate. The five-fingered CEA extension shafts and the four-fingered CEAs remain in place for subsequent removal with the upper guide structure.

During reactor operation, the transfer tube is closed by a manually operated valve in the fuel pool and a single full-face elastomer gasketed blind flange inside the containment. In preparation for refueling, the flange is removed and the refueling cavity is filled with borated water. After a common water level is reached, the transfer tube valve is opened preparatory to

refueling. Provision is made in the refueling cavity for the temporary storage of the upper guide structure.

After the upper guide structure is removed from the vessel, the refueling machine hoist mechanism is positioned to the desired location over the core. Alignment of the hoist to the top of the fuel assembly is accomplished through the use of a digital readout system and may be monitored by closed circuit television. After the fuel hoist is lowered, minor adjustments can be made to properly position the hoist if misalignment is indicated. The operator then energizes the actuator assembly, which rotates the grapple at the bottom of the hoist and locks the fuel assembly to the hoist. The hoist motor is started and the fuel assembly withdrawn into the fuel hoist box assembly so that the fuel is protected during transportation to the fuel upender. The grapple is designed to preclude inadvertent disengagement as the fuel assembly is lifted vertically from the core. When the fuel has been withdrawn from the grapple zone, positive locking between the grapple and the fuel assembly is established so that uncoupling is prevented even in the event of inadvertent initiation of an uncoupling signal to the assembly.

After removal from the core, the spent fuel assembly is moved underwater to the transfer area of the pool. The spent fuel assembly is lowered into the transfer carriage in the refueling cavity. If a fuel shuffle evolution is in progress, the new fuel assembly which has been carried through the transfer tube to the refueling canal is removed from the carriage and moved to the reactor. If a full core offload evolution is in progress the entire core will be defueled and either the fuel transfer valve will be closed or the fuel pool bulkhead will be installed until core refueling is to be initiated. The upending machine lowers the spent fuel assembly to the horizontal position after which a cable drive transports the carriage on tracks through the transfer tube into the refueling canal. Once received in the refueling canal another upending machine returns the transfer carrier to the vertical position. During a fuel shuffle evolution the spent fuel handling machine transfers a new fuel assembly to the transfer carriage and then removes the spent fuel assembly from the transfer carriage and transports it to the spent fuel rack.

The new fuel is moved in the opposite direction as described above. The new fuel assembly is carried through the transfer tube to the refueling cavity where the refueling machine picks it up and places it in its proper position in the core.

The refueling machine can also be used to shuffle fuel within the core in accordance with the fuel management scheme.

At the completion of the refueling operation, the transfer valve is manually closed. The upper guide structure is reinserted in the vessel and the incore instrumentation lowered into the core. The drive shaft extensions are reconnected to the CEAS. The water in the refueling cavity is lowered, using one of the low pressure safety injection pumps. The head is then lowered until the drive shaft extensions enter the control element drive mechanisms. Lowering of the head is continued until it is seated. Then the studs are installed and the head is bolted down, and the transfer tube blind flange installed. The hatch covers of the Permanent Reactor Cavity Seal Ring (PCSR) are removed and stored in racks located on the RCP 2A2 hatch cover. CEDM and incore instrument cablin is reconnected. The cooling ducts are reconnected to the shroud, the vessel vent piping installed, and the missile shield placed in position.

9.1.4.3 Safety Evaluation

9.1.4.3.1 Containment Polar Crane Operation

The containment polar crane does not handle heavy loads during plant power operation. It is designed not to fall from the runway during a seismic event.

9.1.4.3.2 Cask Handling Crane Operation

The spent fuel cask handling crane main hoist is designed to the single-failure-proof criteria of NUREG-0554 and complies with NUREG-0612. The use of a single-failure-proof crane, together with rigging and administrative controls that implement NUREG-0612 heavy load handling guidelines, ensure that the probability of a heavy load drop from the main hoist is sufficiently small that the drop need not be analyzed in accordance with Section 5.1.2 of NUREG-0612. In addition, operation of the auxiliary hoist, which is of a conventional design, is limited to lifts outside the fuel handling building.

A full height reinforced concrete wall with a 3 foot wide vertical fuel assembly transfer slot separates the cask pit from the spent fuel pool. The solid portion of the cask pit wall below the transfer slot ensures that the storage racks in the spent fuel pool will remain covered with water if a leak developed in the cask pit area. The cask pit liner plate is independent of the spent fuel pool. Therefore, any damage to the cask pit liner, even if it were to occur, has no effect on the spent fuel pool liner, and the fuel stored in the spent fuel pool will remain water-covered.

The cask handling arrangement (roof opening vs. pool location) makes it impossible to pass the cask over the spent fuel pool. The cask is assigned a separate storage pool (the cask pit) adjacent to the spent fuel pool. The Cask Handling Facility is located outside the Fuel Handling Building. Please refer to UFSAR Figure 1.2-16 which is a general arrangement of the Fuel Handling Building. The plan at Elevation 96.83 feet shows the location and size of the roof opening through which the cask handling crane hoist ropes can pass. The horizontal movement of the ropes, and therefore of the crane hook, is limited by the roof opening. The plan at elevation 19.50 feet shows the location and dimensions of the spent fuel pool. A comparison of the two plans shows that the crane hook is prevented from approaching the spent fuel pool by the limits of the roof opening.

Additional protection is afforded by the trolley bumpers and a set of limit switches working together with bridge and trolley brakes to prevent movement of the hook into the restricted area as shown on Partial Plan A of UFSAR Figure 1.2-16. The primary set of limit switches and bridge and trolley brakes is backed up by an independent secondary set designed to perform the same function. Under these conditions the hook movement within the building is limited to a narrow corridor sufficient to bring the cask into the building and place it in the center of the cask pit. There are no safety related components located under the travel path of the spent fuel cask.

A set of redundant upper limit switches prevents the crane from lifting the cask above Elevation 62.5 feet.

The cask pit is designed for the following accident cases:

a. Impactive load on the floor due to a straight drop of a 100 ton cask from Elevation 62.5 ft with water level at Elevation 60 ft.

b. Impactive load on the walls separating the cask pit from the spent fuel storage pool due to dropping of a 100 ton cask onto the exterior wall and subsequent tipping of the cask onto either of the interior separating walls.

9.1.4.3.3 Fuel Handling Operation

A failure modes and effects analysis of the fuel handling equipment is not included in this section because the equipment does not perform an active safety function to mitigate a fuel handling accident, and passive component failures need not to be assumed. The analysis results provided in Section 15.7.4 demonstrate that applicable dose limits are not exceeded as a result of the design basis fuel handling accident. No credit is taken for single-failure-proof design of redundant components or subsystems of the fuel handling equipment to mitigate the consequences of the postulated fuel handling accident.

Direct communication between the control room and the refueling machine console is available whenever changes in core geometry are taking place.

Operability of the fuel handling equipment, including the bridge and trolley, lifting mechanisms, upending machines, transfer carriage, new fuel handling crane, new fuel elevator, and the associated instrumentation and controls, is assured through the implementation of preoperational tests. Prior to the fuel loading, the equipment is cycled through its operations in accordance with plant procedures. In addition to the interlocks described in Subsection 9.1.4.2.1, the equipment has the following special features:

a. The appropriate components of the Fuel Handling System are electrically interlocked with each other to assist the operator in properly conducting the fuel handling operation. Failure of any of these interlocks in the event of operator error does not result in damage to more than one fuel assembly. The radiological consequences associated with the activity released from an entire assembly are discussed in Section 15.7.

b. Miscellaneous special design features that facilitate handling operations include: backup manual operation of the refueling machine hoist in the event of power failure; a dual wound transfer system motor to permit the application of an increased pull on the transfer carriage in the event it becomes stuck; a viewing port in the refueling machine trolley deck to provide visual access to the reactor for the operator; electronic and visual indication of the refueling machine position over the core; a protective shroud into which the fuel assembly is drawn by the refueling machine; transfer system upender manual operation by a special tool in the event that the hydraulic system becomes inoperative.

c. The fuel transfer tube is sufficiently large to provide natural circulation cooling of a fuel assembly in the unlikely event that the transfer carriage should be stopped in the tube. The manual operator for the fuel transfer tube valve extends from the valve to the operating deck. Also, the valve operator has enough flexibility to allow for operation of the valve even with thermal expansion of the fuel transfer tube.

d. Travel stops in both the refueling and spent fuel handling machines restrict withdrawal of the spent fuel assemblies. This provides for a minimum water cover of nine feet over the top of the fuel assembly limiting radiation level to 2.5 mrem/h or less at the surface of the water.

e. PSL is in compliance with NUREG-0612, Control of Heavy Loads, and therefore, will not be impacted by a heavy load drop. A fuel assembly drop due to failure of the fuel machine is a remote occurrence that would result in a limited fall. The new and spent fuel storage racks are designed so that impact from accidental dropping or side swinging of a fuel assembly does not damage the stored assemblies.

Administrative controls and physical limitations imposed on fuel handling operations to preclude the possibility of a fuel handling accident are discussed in Section 15.7.

9.1.4.4 Testing and Inspection Requirements

During manufacture at the vendor's plant, various in-process inspections and checks are required including certification of materials and heat treating, and liquid-penetrant or magnetic-particle inspection of critical welds. Following completion of manufacture, compliance with design and specification requirements is determined by assembling and testing the equipment in the vendor's shop utilizing a dummy fuel assembly. All traversing mechanisms are tested for speed and positioning accuracy. All hoisting equipment is tested for vertical functions and controls, rotation, and load misalignment.

Hoisting equipment is also load tested to 125 percent of specified hoist capacity. Setpoints are determined and adjusted and the adjustment limits are verified. Equipment interlock function, and backup systems operations are checked. Those functions having manual operation capability are exercised manually. During these tests, the various operating parameters such as motor speed, voltage, and current, hydraulic system pressures, and load measuring accuracy and setpoints are recorded. At the completion of these tests the equipment is checked for cleanliness and the locking of those fasteners that do not have to be disassembled for shipment.

The equipment is pre-operationally checked before use in the facility in accordance with approved procedures.

9.1.4.5 Instrumentation Requirements

The refueling system instrumentation and controls are described in Subsection 9.1.4.2. Analysis provided in Section 15.7 demonstrates that applicable dose limits are not exceeded as a result of the design basis fuel handling accident. No credit is taken for instrumentation or interlocks on components of the fuel handling equipment to either prevent or mitigate the consequences of the postulated accident. Thus, safety related interlocks are not provided.

SECTION 9.1: REFERENCES

1. ”MCNP - A General Monte Carlo N-Particle Transport Code, Version 5,” Los Alamos National Laboratory, LA-UR-08-1987, April 24, 2003 (Revised 2/1/2008).

2. ”Nuclear Group Computer Code Benchmark Calculations,” Holtec Report HI-2104790 Rev. 0, January 2011.

3. M. Edenius, K. Ekberg, B.H. Forssén, and D. Knott, “CASMO-4, A Fuel Assembly Burnup Program User’s Manual,” Studsvik/SOA-95/1, Studsvik of America, Inc. and Studsvik Core Analysis AB (proprietary).

4. Deleted

5. Longo, R., and Bailey, D. F., "Seismic Analysis of Spent Fuel Racks," ANS paper TS-7308 presented at the ANS Topical Meeting on Options for Spent Fuel Storage at Savannah, Georgia, September 26-29, 1982.

6. Bathe, K. J., Wilson, E. L., and Peterson, F. E., "SAP IV-A Structural Analysis Program for Static and Dynamic Response of Linear Systems,” Report No. EERC 73-11, Earthquake Engineering Research Center, University of California - Berkeley, June 1973.

7. SC-DR-65-34, "SHOCK - A Computer Code for Solving Lumped Mass Dynamic Systems,” V. K. Gabrielson, January, 1966.

8. NRC Guidance, "Review and Acceptance of Spent Fuel Storage and Handling Applications,” dated April 1978 and modified January 19, 1979.

9. DELETED

10. PSL-ENG-SEFJ-13-010, Revision 1, Performance of Partial and Full Core Offloads With EPU Core. EC291265

11. St. Lucie Plant Condition Report 97-0583

12. Attachment 3 (Holtec International Report HI-2104753, “St. Lucie Unit 2 Criticality Analysis for EPU and Non-EPU Fuel,” Revision 4) to FPL Letter L-2012-201, R.L. Anderson, Site Vice President, St. Lucie Plant to USNRC document control desk, re: “St. Lucie Plant Unit 2, docket No. 50-389, Renewed Facility Operating License No. NPF-16, Response to NRC Reactor Systems Branch Request for Additional Information Regarding Extended Power Uprate License Amendment Request,” May 7, 2012 (ADAMS ML 12132A414)

13. NRC Letter; T.E. Collins to T. Greene (WOG), Acceptance for Referencing of Licensing Topical Report WCAP-14416-P, Westinghouse Spent Fuel Rack Methodology (TAC No. M93254), October 25, 1996.

14. Safety Evaluation by Office of Nuclear Reactor Regulation related to Amendment No. 101 of Facility Operating License No. NPF-16 Regarding Boron Credit in the Spent Fuel Pool, Florida Power & Light Company, Et. Al., St. Lucie Plant, Unit 2, Docket No. 50-389, May 6, 1999.

15. Not Used

16. FPL Safety Evaluation PSL-ENG-SENS-98-033, Reconfiguration Test for the Unit 2 Spent Fuel Pool, Revision 1, June 1999.

17. FPL Safety Evaluation JPN-PSL-SENP-94-029, Revision 4, Shutdown Operations Criteria for Reduced Inventory and Draining the Reactor Coolant System, May 2000.

18. Engineering Package (EP) – PC/M 99170, Removal of Unit 2 Spent Fuel Storage Cell Blocking Devices, Revision 2, January 2003.

19. FPL Evaluation PSL-ENG-SENS-00-013, Revision 4, Use of PRC-01 Resin to Remove Co-58 Contaminants, September 2005.

20. Engineering Package (EP) - PC/M 03124, Spent Fuel Cask Storage Pool Rack Project, Revision 0, March 2006.

21. Safety Evaluation prepared by the Office of Nuclear Reactor Regulation (NRC) Relating to the Installation of a Cask Pit Fuel Storage Rack in St. Lucie Plant, Units No. 1 and No. 2, License Amendments 192 and 135, July 9, 2004 and as revised under NRC letter dated August 16, 2004.

22. EC 275651, St. Lucie Unit 2 Spent Fuel Pool Storage Rack Borated Inserts for Extended Power Uprate (EPU), Rev. 0

23. Letter, T.J. Orf (NRC) to M. Nazar (FPL), St. Lucie Unit 2 - Issuance of Amendment Regarding Extended Power Uprate (TAC No. ME5843)

24. EC 291140, St. Lucie Unit 2 Fuel Storage Around SFP Location KK-3, Rev. 0. EC291140

TABLE 9.1-1

NEW FUEL STORAGE RACKS

Number of square cavities	80
Size of the cavity	8-11/16 inches square
Center to center spacing between cavities	23 inches
Separation between arrays	69 inches

TABLE 9.1-2

ASSUMPTIONS FOR CRITICALITY ANALYSIS FOR NEW FUEL RACKS

1.	Enrichment	4.6 wt% U-235
2.	Fuel	Fresh and Non-depleted
3.	Burnable Poison Rods	No Credit Assumed
4.	Control Rods	No Credit Assumed
5.	Minor Structural Members	No Credit Assumed
6.	Moderator	Effects of full range of water densities (mist conditions) considered

TABLE 9.1-3

ASSUMPTIONS FOR SPENT FUEL RACK CRITICALITY ANALYSIS

1.	Enrichment:	4.6 wt% U-235
2.	Fuel:	Depleted and Non-Depleted
3.	Moderator:	H_2O with and without soluble boron
4.	Region I and II Cask Pit Rack arrays	Finite in lateral extent and finite in length
5.	Mechanical Uncertainties:	Manufacturing tolerances etc., assumed, sensitivity analysis performed, applied uncertainty to K_{eff}
6.	CEA	Analysis credits CEAs in Region I
7.	Metamic Inserts	Analysis credits Metamic Inserts in Region 2
8.	Long-term reactivity changes	Considered effects of actinide and long half-life fission product decay

TABLE 9.1-3a

LIST OF LIGHT LOADS THAT MAY BE LIFTED
OVER THE SPENT FUEL POOL

Item	Approximate Weight (lbs)
Utility basket	300
TV camera - portable	20
CEA removal tool	100
Removable handrail, 1 section	150
Transfer canal seal plate	500
Cell blocking device removal tools (Region I and II)	20-210
Region I 'L' Insert	154
Cover plate for weld cutting	<200
Basket fixture for 'L' insert weld cutting	<500
Metamic Insert	25
Metamic™ Inserts Handling Tools	<100

TABLE 9.1-3b

SUMMARY OF THE CRITICALITY SAFETY ANALYSIS FOR CASE 1

Enrichment (wt% U-235)	4.6
Calculated k_{eff}	0.8005
Calculation Uncertainty (2σ)	0.0006
MCNP Code Uncertainty	0.0085
Total Uncertainty (statistical combination)	0.0085
Code Bias	0.0036
Temperature Bias	0
Maximum k_{eff}	0.8126

TABLE 9.1-3c

SUMMARY OF THE CRITICALITY SAFETY ANALYSIS FOR CASE 2

Enrichment (wt% U-235)	4.6
Calculated k_{eff}	0.9225
Calculation Uncertainty (2σ)	0.0006
MCNP Code Uncertainty	0.0085
Total Uncertainty (statistical combination)	0.0085
Code Bias Temperature Bias	0.0036 0.0013
Maximum k_{eff}	0.9359

TABLE 9.1-3d

EXAMPLE OF BURNUP VERSUS ENRICHMENT REQUIREMENT FOR CASE 3

Enrichment (wt% U-235)	4.6
Burnup (GWD/MTU)	50
Cooling time (yr)	0
Axial Profile	Non-Blank
Calculated k_{eff}	0.9533
Depletion Uncertainty kcalc	0.0177
Burnup Uncertainty	0.0088
FP Uncertainty	0.0239
MCNP Code Uncertainty	0.0085
Calculation Uncertainty (2σ)	0.0012
Total Uncertainty (statistical combination)	0.0322
Code Bias	0.0036
Temperature Bias	0
Total Correction	0.0358
Maximum k_{eff}	0.9891
Burnup (GWD/MTU)	45
Cooling time (yr)	0
Axial Profile	Uniform
Calculated k_{eff}	0.9777
Depletion Uncertainty	0.0165
Burnup Uncertainty	0.0082
FP Uncertainty	0.0243
MCNP Code Uncertainty	0.0085
Calculation Uncertainty (2σ)	0.0012
Total Uncertainty (statistical combination)	0.0317
Code Bias	0.0036
Temperature Bias	0
Total Correction	0.0353
Maximum k_{eff}	1.013
Target k_{eff}	0.9900
Calculated Burnup (GWD/MTU)	49.81

TABLE 9.1-3e

EXAMPLE OF BURNUP VERSUS ENRICHMENT REQUIREMENT FOR CASE 4

Enrichment (wt% U-235)	4.6
Burnup (GWD/MTU)	35
Cooling time (yr)	0
Axial Profile	Uniform
Calculated k_{eff}	0.9455
Depletion Uncertainty	0.0123
Burnup Uncertainty	0.0061
FP Uncertainty	0.0191
MCNP Code Uncertainty	0.0085
Calculation Uncertainty (2σ)	0.0012
Total Uncertainty (statistical combination)	0.025
Code Bias	0.0036
Temperature Bias	0
Total Correction	0.0286
Maximum k_{eff}	0.9741
Burnup (GWD/MTU)	30
Cooling time (yr)	0
Axial Profile	Uniform
Calculated k_{eff}	0.9742
Depletion Uncertainty	0.0108
Burnup Uncertainty	0.0054
FP Uncertainty	0.0173
MCNP Code Uncertainty	0.0085
Calculation Uncertainty (2σ)	0.0012
Total Uncertainty (statistical combination)	0.0228
Code Bias	0.0036
Temperature Bias	0
Total Correction	0.0264
Maximum k_{eff}	1.0006
Target k_{eff}	0.9900
Calculated Burnup (GWD/MTU)	32

TABLE 9.1-3f

EXAMPLE OF BURNUP VERSUS ENRICHMENT REQUIREMENT FOR CASE 5

Enrichment (wt% U-235)	4.6
Burnup (GWD/MTU)	50
Cooling time (yr)	0
Axial Profile	Non-Blank
Calculated k_{eff}	0.9498
Depletion Uncertainty	0.0171
Burnup Uncertainty	0.0085
FP Uncertainty	0.0232
MCNP Code Uncertainty	0.0085
Calculation Uncertainty (2σ)	0.001
Total Uncertainty (statistical combination)	0.0312
Code Bias	0.0036
Temperature Bias	0
Total Correction	0.0348
Maximum k_{eff}	0.9846
Burnup (GWD/MTU)	45
Cooling time (yr)	0
Axial Profile	Non-Blank
Calculated k_{eff}	0.9727
Depletion Uncertainty_	0.016
Burnup Uncertainty	0.008
FP Uncertainty	0.0227
MCNP Code Uncertainty	0.0085
Calculation Uncertainty (2σ)	0.0012
Total Uncertainty (statistical combination)	0.0301
Code Bias	0.0036
Temperature Bias	0
Total Correction	0.0337
Maximum k_{eff}	1.0064
Target k_{eff}	0.9900
Calculated Burnup (GWD/MTU)	48.76

TABLE 9.1-3g

EXAMPLE OF BURNUP VERSUS ENRICHMENT REQUIREMENT FOR CASE 6

Enrichment (wt% U-235)	4.6
Burnup (GWD/MTU)	60
Cooling time (yr)	0
Axial Profile	Non-Blank
Calculated k_{eff}	0.9407
Depletion Uncertainty kcalc	0.0203
Burnup Uncertainty	0.0101
FP Uncertainty	0.0263
MCNP Code Uncertainty	0.0085
Calculation Uncertainty (2σ)	0.0014
Total Uncertainty (statistical combination)	0.0358
Code Bias	0.0036
Temperature Bias	0.002
Total Correction	0.0414
Maximum k_{eff}	0.9821
Burnup (GWD/MTU)	55
Cooling time (yr)	0
Axial Profile	Non-Blank
Calculated k_{eff}	0.9634
Depletion Uncertainty	0.0191
Burnup Uncertainty	0.0096
FP Uncertainty	0.0256
MCNP Code Uncertainty	0.0085
Calculation Uncertainty (2σ)	0.0012
Total Uncertainty (statistical combination)	0.0344
Code Bias	0.0036
Temperature Bias	0.002
Total Correction	0.0400
Maximum k_{eff}	1.0034
Target k_{eff}	0.9900
Calculated Burnup (GWD/MTU)	58.15

TABLE 9.1-3h

EXAMPLE OF BURNUP VERSUS ENRICHMENT REQUIREMENT FOR CASE 7

Enrichment (wt% U-235)	4.6
Burnup (GWD/MTU)	40
Cooling time (yr)	0
Axial Profile	Non-Blank
Calculated k_{eff}	0.9536
Depletion Uncertainty	0.014
Burnup Uncertainty	0.007
FP Uncertainty	0.0208
MCNP Code Uncertainty	0.0085
Calculation Uncertainty (2σ)	0.0014
Total Uncertainty (statistical combination)	0.0274
Code Bias	0.0036
Temperature Bias	0.0027
Total Correction	0.0337
Maximum k_{eff}	0.9873
Burnup (GWD/MTU)	35
Cooling time (yr)	0
Axial Profile	Uniform
Calculated k_{eff}	0.9816
Depletion Uncertainty	0.0126
Burnup Uncertainty	0.0063
FP Uncertainty	0.0202
MCNP Code Uncertainty	0.0085
Calculation Uncertainty (2σ)	0.0012
Total Uncertainty (statistical combination)	0.0261
Code Bias	0.0036
Temperature Bias	0.0027
Total Correction	0.0324
Maximum k_{eff}	1.014
Target k_{eff}	0.9900
Calculated Burnup (GWD/MTU)	39.49

TABLE 9.1-3i

EXAMPLE OF BURNUP VERSUS ENRICHMENT REQUIREMENT FOR CASE 8

Enrichment (wt% U-235)	4.6
Burnup (GWD/MTU)	10
Cooling time (yr)	0
Axial Profile	Uniform
Calculated k_{eff}	0.9481
Depletion Uncertainty	0.0038
Burnup Uncertainty	0.0019
FP Uncertainty	0.0076
MCNP Code Uncertainty	0.0085
Calculation Uncertainty (2σ)	0.0014
Total Uncertainty (statistical combination)	0.0122
Code Bias	0.0036
Temperature Bias	0
Total Correction	0.0158
Maximum k_{eff}	0.9639
Burnup (GWD/MTU)	5
Cooling time (yr)	0
Axial Profile	Uniform
Calculated k_{eff}	0.9788
Depletion Uncertainty	0.0022
Burnup Uncertainty	0.0011
FP Uncertainty	0.0054
MCNP Code Uncertainty	0.0085
Calculation Uncertainty (2σ)	0.0014
Total Uncertainty (statistical combination)	0.0105
Code Bias	0.0036
Temperature Bias	0
Total Correction	0.0141
Maximum k_{eff}	0.9929
Target k_{eff}	0.9900
Calculated Burnup (GWD/MTU)	5.5

TABLE 9.1-3j

EXAMPLE OF BURNUP VERSUS ENRICHMENT REQUIREMENT FOR CASE 9

Enrichment (wt% U-235)	4.6
Burnup (GWD/MTU)	55
Cooling time (yr)	0
Axial Profile	Non-Blank
Calculated k_{eff}	0.9331
Depletion Uncertainty	0.0186
Burnup Uncertainty	0.0093
FP Uncertainty	0.0247
MCNP Code Uncertainty	0.0085
Calculation Uncertainty (2σ)	0.001
Total Uncertainty (statistical combination)	0.0334
Code Bias	0.0036
Temperature Bias	0.0013
Total Correction	0.0383
Maximum k_{eff}	0.9714
Burnup (GWD/MTU)	50
Cooling time (yr)	0
Axial Profile	Non-Blank
Calculated k_{eff}	0.9586
Depletion Uncertainty	0.0173
Burnup Uncertainty	0.0087
FP Uncertainty	0.0235
MCNP Code Uncertainty	0.0085
Calculation Uncertainty (2σ)	0.0012
Total Uncertainty (statistical combination)	0.0316
Code Bias	0.0036
Temperature Bias	0.0013
Total Correction	0.0365
Maximum k_{eff}	0.9951
Target k_{eff}	0.9900
Calculated Burnup (GWD/MTU)	51.08

TABLE 9.1-3k

EXAMPLE OF BURNUP VERSUS ENRICHMENT REQUIREMENT FOR CASE 10

Enrichment (wt% U-235)	4.6
Burnup (GWD/MTU)	60
Cooling time (yr)	0
Axial Profile	Non-Blank
Calculated k_{eff}	0.9468
Depletion Uncertainty	0.0203
Burnup Uncertainty	0.0102
FP Uncertainty	0.026
MCNP Code Uncertainty	0.0085
Calculation Uncertainty (2σ)	0.0012
Total Uncertainty (statistical combination)	0.0356
Code Bias	0.0036
Temperature Bias	0.0034
Total Correction	0.0426
Maximum k_{eff}	0.9894
Bumup (GWD/MTU)	55
Cooling time (yr)	0
Axial Profile	Non-Blank
Calculated k_{eff}	0.9681
Depletion Uncertainty	0.0193
Bumup Uncertainty	0.0096
FP Uncertainty	0.0258
MCNP Code Uncertainty	0.0085
Calculation Uncertainty (2σ)	0.001
Total Uncertainty (statistical combination)	0.0347
Code Bias	0.0036
Temperature Bias	0.0034
Total Correction	0.0417
Maximum k_{eff}	1.0098
Target k_{eff}	0.9900
Calculated Burnup (GWD/MTU)	59.85

TABLE 9.1-3l

SUMMARY OF ACCIDENT CONDITIONS

	Enr	Bu	Boron	K-calc	Unc	K-calc + Unc
Misload Accidents						
Single Fresh Assembly Mislocation	4.6	0	1500	0.8723	0.0134	0.8857
Single Missing Insert Accidents						
Case 5	4.6	47	1500	0.8101	0.0369	0.8470
Case 6	4.6	56	1500	0.8041	0.0441	0.8482
Misloaded Assembly Accidents						
Case 2	4.6	10	1500	0.9199	0.0134	0.9333
Case 4	4.6	32	1500	0.9030	0.0292	0.9322
Case 7	4.6	39	1500	0.8961	0.0345	0.9306
Single Missing CEA Accidents						
Case 3	4.6	49	1500	0.8192	0.0375	0.8567
Case 9	4.6	47	1500	0.8142	0.0384	0.8526
Case 10	4.6	56	1500	0.8061	0.0455	0.8516
Inspection Accidents						
Case 5 (Metamic Inserts-	4.6	47	1500	0.8680	0.0369	0.9049
Case 5 (Metamic Inserts- Diagonal)	4.6	47	1500	0.8687	0.0369	0.9056
Case 6	4.6	56	1500	0.8644	0.0441	0.9085
Case 7	4.6	39	1500	0.8921	0.0345	0.9266
Multiple Assembly/Insert						
Case 6	4.6	47	1500	0.8382	0.0441	0.8823
Case 10	4.6	47	1500	0.8405	0.0455	0.8860
Case 1 & 8 Bounding Accident 3/4+1x4/4 Fresh Fuel						
Case 1 & 8	4.6	0	1500	0.8986	0.0165	0.9151

TABLE 9.1-4

REFUELING CAVITY AND SPENT FUEL POOL WATER CHEMISTRY

Analysis	Design Limits	Operating Limits
pH	3.8-10.6	4.5-10.2
Boron	0-2150 ppm Boron	≥1900 ppm
Chloride	015 ppm Cl	<0.15 ppm Cl
Fluoride	0-.1 ppm F	<0.1 ppm F
Optical Clarity	------	Note (1)
Sulfate	------	100 ppb

Note:

(1) Minimum optical clarity is defined as being able to read fuel assembly lettering which is 3/8" high, 3/16" wide and 1/16" thick at 25 feet below the surface of the water with the aid of optical instruments.

TABLE 9.1-5

SPENT FUEL POOL PROCESS FLOW DATA
(See Figure 9.1-6)

FUEL POOL COOLING[1]

Location	1	2	3	4a	4b	5	6	7	8a	8b	9
Flow (gpm)	1523	1523	1523	-	-	-	-	-	1523	0	-
Press (psig)	16	23	20	-	-	-	-	-	53	16	-
Temp (°F)	<140	<140	<114	-	-	-	-	-	<140	<140	-

MAXIMUM FUEL POOL COOLING[2]

Location	1	2	3	4a	4b	5	6	7	8a	8b	9
Flow (gpm)	3056	3056	3056	-	-	-	-	-	1528	1528	-
Press (psig)	14	36	24	-	-	-	-	-	44	44	-
Temp (°F)	<150	<150	<130	-	-	-	-	-	<150	<150	-

PURIFICATION[3]

Location	1	2	3	4a	4b	5	6	7	8a	8b	9
Flow (gpm)	-	-	-	125	25	150	150	150	-	-	150
Press (psig)	-	-	-	6 (psia)	14(psia)	80	50	25	-	-	77
Temp (°F)	-	-	-	125	125	125	125	125	-	-	125

EOC 11 HEAT LOAD[4]

Location	1	2	3	4a	4b	5	6	7	8a	8b	9
Flow (gpm)	1755	1755	1755	-	-	-	-	-	1755	0	-
Press (psig)	16	23	20	-	-	-	-	-	53	53	-
Temp (°F)	<150	<150	<115	-	-	-	-	-	<150	<150	-

Modes of Operation:
1) Fuel Pool Cooling 1492 discharged assemblies including 96 assemblies discharged 5 days after shutdown.
2) Maximum Fuel Pool Cooling (11 batches plus 1 full core in pool with 2 pumps operating).
3) Purification (the pool skimmer will normally be in use).
4) Cycle specific heat load $\leq$ 30.4 E6 BTU/hr, one cooling pump operating.

TABLE 9.1-6

PRINCIPAL COMPONENT DESIGNS DATA SUMMARY

Component	Design Parameters Parameters	Description
Fuel Pool Pump	Quantity	2
	Type	Vertical, single stage Centrifugal Pump
	Design Pressure, (psig)	150
	Design Temperature, (°F)	200
	Rated Head, (ft.)	70
	Rated Flow (gpm)	>1500
	Normal Suction Temperature, (°F)	100-150
	Normal Suction Pressure, (psig)	10.9
	NPSH min. Available @ Rated Flow, (ft.)	57.5
	Motor, (hp)	40
	Fluid, boric acid (ppm Boron)	2150
	Material in contact with liquid	Stainless Steel
	Code	Class 3, ASME III, 1974 Edition, Summer, 1974 Addenda.
	End Connections Inlet	8" 150 lb raised face flange
	Outlet	6" 150 lb raised face flange
Fuel Pool Purification Pump	Quantity	1
	Type	Vertical, single stage, Centrifugal Pump
	Design Pressure, (psig)	150
	Design Temperature, (°F)	200
	Rated Head, (ft.)	165
	Rated Flow, (gpm)	150

TABLE 9.1-6 (Cont'd)

Component	Design Parameters Parameters	Description
Fuel Pool Purification Pump (Cont'd)	Normal Suction Temperature, (°F)	120
	Normal Suction Pressure, (psig)	5.7
	NPSH min. Available @ Rated Flow (ft.)	29.9
	Motor, (hp)	15
	Fluid, Boric Acid (ppm boron)	2150
	Material in contact with liquid	Stainless Steel
	Code	Manufacturers Standard
	End Connections Inlet	3" 150 lb raised face flange
	Outlet	1 1/2" 150 lb raised face flange
Fuel Pool Ion Exchanger	Quantity	1
	Type	Flushable
	Design Pressure, (psig)	200
	Design Temperature, (°F)	250
	Normal Operating Temperature (°)	100-140
	Normal operating Pressure, (psig)	65
	Resin Volume, Total (ft^3)	36
	Resin Volume, Useful (ft^3)	32
	Normal Flow, (gpm)	150
	Design Flow, (gpm)	200
	Code (Vessel)	Class 3, ASME III, 1974 Edition, Winter 1975 Addenda
	Material in contact with liquid	Stainless Steel
	Retention Screen Size	80 Mesh
	Resin Type	Mixed Bed and Particulate Resin e.g. PRC-01

TABLE 9.1-6 (Cont'd)

Component	Design Parameters Parameters	Description
Fuel Pool Ion Exchanger (Cont'd)	Maximum ΔP @ Normal Flow (psi)	15
Fuel Pool Purification Filter	Quantity	1
	Type	Replaceable pleated paper cartridge
	Design Temperature (°F)	250
	Design Pressure, (psig)	100
	Design Flow, (gpm)	200
	Normal Temperature, (°F)	120
	Normal Pressure, (psig)	75
	Normal Flow, (gpm)	150
	Clean ΔP @ 150 gpm (psig)	5
	Loaded ΔP @ 150 gpm (psig)	30
	Max Retention Capability	98% of particulates >5 microns
	Shell material	Stainless Steel
	Fluid, Boric Acid (ppm Boron)	2150
	Code	Class 3, ASME III, 1977, Edition Summer 1977 Addenda
Fuel Pool Heat Exchanger	Quantity	2
	Type	Tube and Shell (2 Tube Pass)
	Code	Class 3, ASME III, 1974 Edition No Addenda
	Tube side (fuel pool) Fluid	Fuel Pool Water
	Design Pressure (psig)	75
	Design Temperature (°F)	250

TABLE 9.1-6 (Cont'd)

Component	Design Parameters Parameters	Description	
	Materials	Stainless Steel	
	Pressure Drop @ Design Flow (psi)	10	
	Normal Flow (lbm/hr)	$.74 \times 10^6$	
	Design Flow (lbm/hr)	1.5×10^6	
	Shell Side (component cooling water)		
	Fluid	Component Cooling Water	
	Design Pressure (psig)	150	
	Design Temperature (°F)	250	
	Materials	Carbon-Steel	
	Pressure Drop @ Design Flow (psig)	10	
	Normal Flow (lbm/hr)	1.78×10^6	
	Design Flow (lbm/hr)	1.78×10^6	
	Operating Parameters		
	Tube side (fuel pool)	1492 fuel assemblies	11 batches plus one full core
	Flow, (lbm/hr)	$.75 \times 10^6$	1.5×10^6
	Inlet Temperature (°F)	139.8	150
	Outlet Temperature (°F)	113.4	<128.7
	Heat Transferred (Btu/hr)	19.76×10^6	31.7×10^6
	Shell side (Component cooling water)		
	Flow (lbm/hr)	1.78×10^6	1.78×10^6
	Inlet Temperature (°F)	100	100
	Outlet Temperature (°F)	111.1	<118

TABLE 9.1-6 (Cont'd)

Component	Design Parameters Parameters	Description
Fuel Pool Purification Pump Suction Strainer	Quantity	1
	Type	Y-Type
	Design Temperature (°F)	200
	Design Pressure, (Psig)	100
	Design Flow, (gpm)	200
	Normal Temperature, (°F)	140
	Normal Pressure, (psig)	20
	Normal Flow, (gpm)	150
	Clean Δ P @ 150 gpm (psig)	1.5
	Loaded Δ P @ 150 gpm (psig)	5.0
	Screen Size	1/8 inch Diameter
	Wetted Material	Stainless Steel
	Code	ASME III, Class 3, 1977 Edition
	Fluid, Boric Acid (ppm Boron)	2150
Fuel Pool Ion Exchanger Strainer	Quantity	1
	Type	Y-Type
	Design Temperature, (°F)	200
	Design Pressure, (psig)	100
	Design Flow, (gpm)	200
	Normal Temperature (°F)	140
	Normal Pressure, (psig)	30
	Normal Flow, (gpm)	150
	Clean Δ P @ 150 gpm	1.4

TABLE 9.1-6 (Cont'd)

Component	Design Parameters	
	Parameters	Description
Fuel Pool Ion Exchanger Strainer (Cont'd)	Loaded ΔP @ 150 GPM	5.0
	Screen Size	100 Mesh
	Wetted Material	Stainless Steel
	Code	Class 3, ASME III, 1977 Edition
	Fluid, Boric Acid (ppm Boron)	2150

TABLE 9.1-7

FUEL POOL SYSTEM INSTRUMENTATION

Instrument Identification Number	System Parameter & Location	Indication Local	Indication Control Room	Alarm Local	Alarm Control Room	Instrument[1] Range	Normal Operating Range	Instrument[1] Accuracy	Instrument Qualification Status
TI-4420	Fuel Pool Temperature	*			Hi		120-150°F		Class 1E
TI-4421	Fuel Pool Temperature	*			Hi		120-150°F		Class 1E
TI-4416	Fuel Pool Heat Exchanger Outlet Temp	*					120-150°F		Non 1E
TI-4405	Fuel Pool Heat Exchanger Outlet Temp.	*					100-130°F		Non 1E
TI-4425	Fuel Pool Ion Exchanger Inlet Temperature	*					100-140°F		Non 1E
LS-4420	Fuel Pool Water Level				Hi/Lo	-	-		Class 1E
LS-4421	Fuel Pool Water Level				Hi/Lo	-	-		Class 1E
PI-4402	Fuel Pool Pump 2B Discharge Pressure	*					40-50 psig		Non 1E
PI-4401	Fuel Pool Pump 2A Discharge Pressure	*					40-50 psig		Non 1E
PI-4411	Fuel Pool Purification Pump Suction Pressure	*					5-10 psig		Non 1E
PS-4403	Fuel Pool Pump Discharge Header Pressure				Lo	-	40-50 psig		Non 1E
PI-4412	Fuel Pool Purification Fuel Pool Pump Discharge	*					75-90 psig		Non 1E
PDI-4415	Fuel Pool Purification Filter Differential Pressure	*					5-30 psid		Non 1E
PDI-4416	Fuel Pool Ion Exchanger Differential Pressure	*					7-10 psid		Non 1E

(1) Instrument ranges are selected in accordance with standard engineering practices. Instrument accuracies are selected such that existing instrument loop performance and safety analysis assumptions remain valid. Where applicable, instrument accuracies are also evaluated for their impact on setpoints in accordance with the FPL Setpoint Methodology.

Table 9.1-8
This table has been deleted

EC291265

TABLE 9.1-8a
Calculated Peak SFP Bulk Temperature Results

EC291265

In-Core Hold Time (hr)	Coolant Water Inlet Temperature (F)	Allowable Fuel Discharge Rate from Reactor (assemblies/hr)	Number of Operating SFPCS Pumps	Coincident Heat Load (Btu/hr)	Thermal Overshoot (F)
90*	95	6	1	40.2	27.7
110	100	6	1	38.2	26.46
*This will conservatively support a time of 95 hours					

TABLE 9.1-9

FAILURE MODES AND EFFECTS ANALYSIS

No.	Name	Failure Mode	Cause	Symptoms and Local Effects Including Dependent Failures	Method of Detection*	Inherent Compensating Provision	Remarks and Other Effects
1.	Fuel pool pump 2A or 2B	Operating pump fails	Electrical malfunction, Mechanical malfunction	Loss of one fuel pool pump.	Low pressure from PS-4403. No pump discharge pressure from PI-4401 or PI-4402	Redundant fuel pool pump.	With one fuel pool pump inoperable, the fuel pool equilibrium temperature will not exceed 150°F
2.	Fuel pool heat exchanger 2A or 2B	Cross Leakage	Corrosion, tube defects	Leakage of component cooling water (CCW) to fuel pool coolant.	Low level alarm in CCW surge tank	Redundant fuel pool heat exch.	----
3.	Fuel pool level indicator LS-4420 or LS-4421	Fails to function properly	Electrical malfunction	Loss of one fuel pool level monitor.	Periodic testing, comparison with redundant level monitor, No increase in fuel pool temperature	Redundant level monitor	The fuel pool level switches activate in the control room to warn the operator of a system malfunction.
4.	Fuel pool temperature indicator TI-4421 or TI-4420	Fails to indicate correct temperature	Electrical malfunction	Loss of one fuel pool temperature monitor	Periodic testing, Comparison with redundant temperature monitor, No decrease in fuel pool water level.	Redundant temperature monitor; can compare against TI-4425 if the purification subsystem is operational.	The fuel pool temperature alarms are activated in the control room to warn the operator of system malfunction

* The Method of Detection Column is used to show that it is possible to detect the failure during or before system's operation.

TABLE 9.1-9 (Cont'd)

No.	Name	Failure Mode	Cause	Symptoms and Local Effects Including Dependent Failures	Method of Detection*	Inherent Compensating Provision	Remarks and Other Effects
5.	Fuel pool purification pump	Fails during operation	Electrical malfunction, Mechanical malfunction	Loss of fuel pool purification loop. Unable to establish fuel pool makeup from RWT.	Low pump suction and discharge pressure indication from PI-4411 or PI-4412. Pump "run" light	Isolation of pump to facilitate repair	Fuel pool makeup can also be established from the PMW.
6.	Fuel pool purification filter pressure differential indicator PDI-4415	Fails to indicate correct pressure	Electrical malfunction, Mechanical malfunction	Unable to properly monitor purification filter loading. Possible undesired replacement of filter element.	Periodic testing	Operator can allow purification flow to bypass purification filter until repair is completed.	
7.	Fuel pool Ion exchanger pressure differential indicator PDI-4416	Fails to indicate correct pressure	Electrical malfunction, Mechanical malfunction	Unable to properly monitor ion exchanger loading.Possible undesired replacement of ion exchanger resin.	Periodic testing	Operator can allow purification flow to bypass ion exchanger until repair is completed.	
8.	Fuel pool ion exchanger inlet temperature indicator	a) Erroneous low tempera-ture indication	Electrical or mechanical malfunction	No impact on system operation	Comparison with reading from TI-4420 and TI-4421	None	
		b) Erroneous high tempera-ture indication	Electrical or mechanical malfunction	No impact on system operation	Comparison with reading from TI-4420 and TI-4421	None	

* The Method of Detection Column is used to show that it is possible to detect the failure during or before system's failure.

TABLE 9.1-10

MAJOR TOOLS AND SERVICING EQUIPMENT
REQUIRED FOR REFUELING FUNCTIONS

		Storage Quantity		Location
1.	Reactor Vessel Stud Tensioners	6		(a)
2.	Reactor Vessel Stud Tensioners Pump Unit	1		(a)
3.	Reactor Vessel Stud Storage Stand	1	per unit	(b)
4.	Lifting Tools for R.V. Studs and Nuts	3		(a)
5.	Reactor Vessel Guide Studs	2	per unit	(b)
6.	Source Handling Tool	1		(a)
7.	Head Lift Rig Spreader	1	per unit	(b)
8.	Stud Tensioning Hoists	3		(a)
9.	Stud Hole Plugs	54	per unit	(b)
10.	Surveillance Handling Tool	1		(a)
11.	Reactor Coolant Pump Stud Tensioner	2		(a)
12.	Reactor Coolant Pump Seal Cartridge Lift Rig	1		(a)
13.	Upper Guide Structure Lift Rig	1	per unit	(b)
14.	Core Support Barrel Lift Rig	1		(a)
15.	Internals Lift Tie Rod Assembly	1		(a)
16.	Hydraulic Power Package	2	per unit	(a) & (b)
17.	Permanent Reactor Cavity Seal Ring Hatch Covers	8	per unit	(b)
18.	CEA Transfer Carrier	1	per unit	(a)
19.	CEA Handling Tool (four Finger)	1	per unit	(a)
20.	Refueling Machine	1	per unit	(b)
21.	Fuel Transfer System	1	per unit	(a) & (b)
22.	(Deleted)			
23.	(Deleted)			
24.	(Deleted)			
25.	Reactor Vessel Stud Support	54	per unit	(b)
26.	Containment Polar Crane	1	per unit	(b)
27.	Cask Handling Crane	1	per unit	(a)
28.	Spent Fuel Handling Machine	1	per unit	(a)
29.	New Fuel Elevator	1	per unit	(a)
30.	Spent Fuel Handling Tool	1	per unit	(a)
31.	New Fuel Handling Tool	1	per unit	(a)
32.	New CEA Handling Tool	1	per unit	(a)
33.	New Fuel Handling Crane	1	per unit	(a)
34.	Hydraulic Tool for the Remote Installation and Removal of the Fuel Transfer Tube closure flange	1	per unit	(a)

Notes:

a. Not stored in containment during reactor operation.
b. Stored in containment during reactor operation.

TABLE 9.1-11

FUEL HANDLING SYSTEM - CODES AND STANDARDS

Component	Principle Code Standard (c)	Seismic Category (b)	Quality Group (b)
Refueling Machine	CMAA/AISC	- (a)	-
Spent Fuel Handling Machine	CMAA/AISC	- (a)	-
Fuel Transfer Tube	-	- (a)	-
Bellows Assembly	-	- (a)	-
Tube Closure Assembly	ASME III-MC	I	B
Fuel Transfer Valve	-	-	D
RV Head Lifting Rig	AISC	I (a)	D
Reactor Internals Lift Rig	-	- (a)	-
Permanent Cavity Seal Ring	-	I (a)	D
Containment Polar Crane	CMAA/AISC	I (a)	-
Cask Handling Crane	CMAA/AISC/NUREG	- (a)	-
New Fuel Elevator	AISC	-	-
New Fuel Crane	CMAA/AISC	-	-
Liner Plate for Fuel Transfer Canal	AISC	I	-

Notes:

(a) These components and associated supporting structures must be designed to retain structural integrity during and after a seismic event, but do not have to retain operability for protection of public safety. The basic requirement is prevention of structural collapse and damage to equipment and structures required for protection of public safety.

(b) See Section 3.2 for definitions.

TABLE 9.1-11 (Cont'd)

(c) AISC - Specification for the Design, Fabrication, and Erection of Structural Steel for Buildings, February 12, 1969 and Supplements through December 8, 1971.

CMAA - Crane Manufacturers Association of America, Specification No. 70, Specifications for Electric Overhead Traveling Cranes, October 1971.

ASME - American Society of Mechanical Engineers, Boiler and Pressure Vessel Code, Section III, Division 1, Nuclear Power Plant Components.

NUREG - NRC NUREG-0554, Single Failure Proof Cranes for Nuclear Power Plants

Table 9.1-12
This table has been deleted

TABLE 9.1-13

CONTAINMENT POLAR CRANE DESIGN DATA

A)	BRIDGE		
	Runway Length, Ft.-In.	428 -3 1/2	
	Bridge Weight, Lbs.	325,200	
	Bridge Span, Ft.-In. (Diameter)	136 -4	
	Bridge Motor Hp	10 @ 1200 RPM	EC292136
	Type of Wheels	Straight Tread	
	Number of Wheels	8	
	Maximum Speed, FPM	60	
	Type of Controls	VFD	EC292136
	Type of Brake	Reuland OCCA Disc Brake	
	Type of Bumpers	None (Circular Cr.)	
B)	TROLLEY		
	Length of Trolley Travel, Ft.-In.	112 -1 3/4	
	Trolley Weight (net) Lbs.	132,875	
	Trolley Weight (with load), Lbs.	532,875	
	Distance between Running Rails, Ft.-In.	30 -6	
	Trolley Drive Hp	5 @ 1200 RPM	
	Type of Wheels	Straight Tread	
	Number of Wheels	4	
	Maximum Speed, FPM	25	
	Type of Controls	VFD	EC292136
	Type of Brakes	Reuland OBCA Disc Brake	
	Type of Bumpers	Spring (Chocks)	

TABLE 9.1-13 (Cont'd)

C) HOIST

	MAIN	AUXILIARY	
Lifting Capacity, Ton	200	60	
Drum Size (pitch Circle Dia.), Inches	42.25	23	
Rope Type	6/37 IWRC* EHS	6/37 IWRC* EHS	
Rope Dia., Inches	1 3/8	3/4	
Dia. Top Block Sheaves (Pitch Circle Dia.) Inches	33	22 1/2	
Dia. Hook Block (Pitch Circle Dia.), Inches	33	22 1/2 & 25	
Type Equalizer	Sheave	Sheave	
Type of Hook P&H 646	Forged	Forged 4320H	
Type of Hook Material	AISI 4320H	AISI C1045	
Hook Test Load, Ton	250	62.5	
Max. Travel of Hook, Ft.-In.	104 -0	105 -3	
Max. Hoist Speed. FPM & IPM	4.8 & 6	22	
No. of Parts of Rope	14	12	
c/c Sheaves in Highest Pos.	70.25	70	
Type of Control Brakes	Dynamic	Dynamic	EC292136
Type of Holding Brakes	2/13 SBE	2/16 SBE	
Type of Control	VFD	VFD	EC292136
Hoist Motor Hp	85	100	

D) DESIGN LIFE

Number of rated capacity load cycles (structural members)		20,000 minimum
Gearing and shafting fatigue life (cycles of component loading)		10 million minimum

* IWRC - Independent Wire Rope Center

TABLE 9.1-13 (Cont'd)

E) CRANE SPEEDS AT CAPACITY LOADS

Main hook hoisting and lowering:	4.8 FPM maximum with stepless speed control and 2 IPM micro speed.
Auxiliary hook hoisting and lowering:	22 FPM maximum with stepless speed control.
Bridge travel:	60 FPM maximum with stepless speed control.
Trolley travel:	25 FPM with stepless speed control.

Refer to Dwg.
2998-G-832

Amendment No. 10 (7/96)

FLORIDA POWER & LIGHT COMPANY
ST. LUCIE PLANT UNIT 2

FUEL HANDLING BUILDING
NEW FUEL STORAGE RACKS

FIGURE 9.1-1

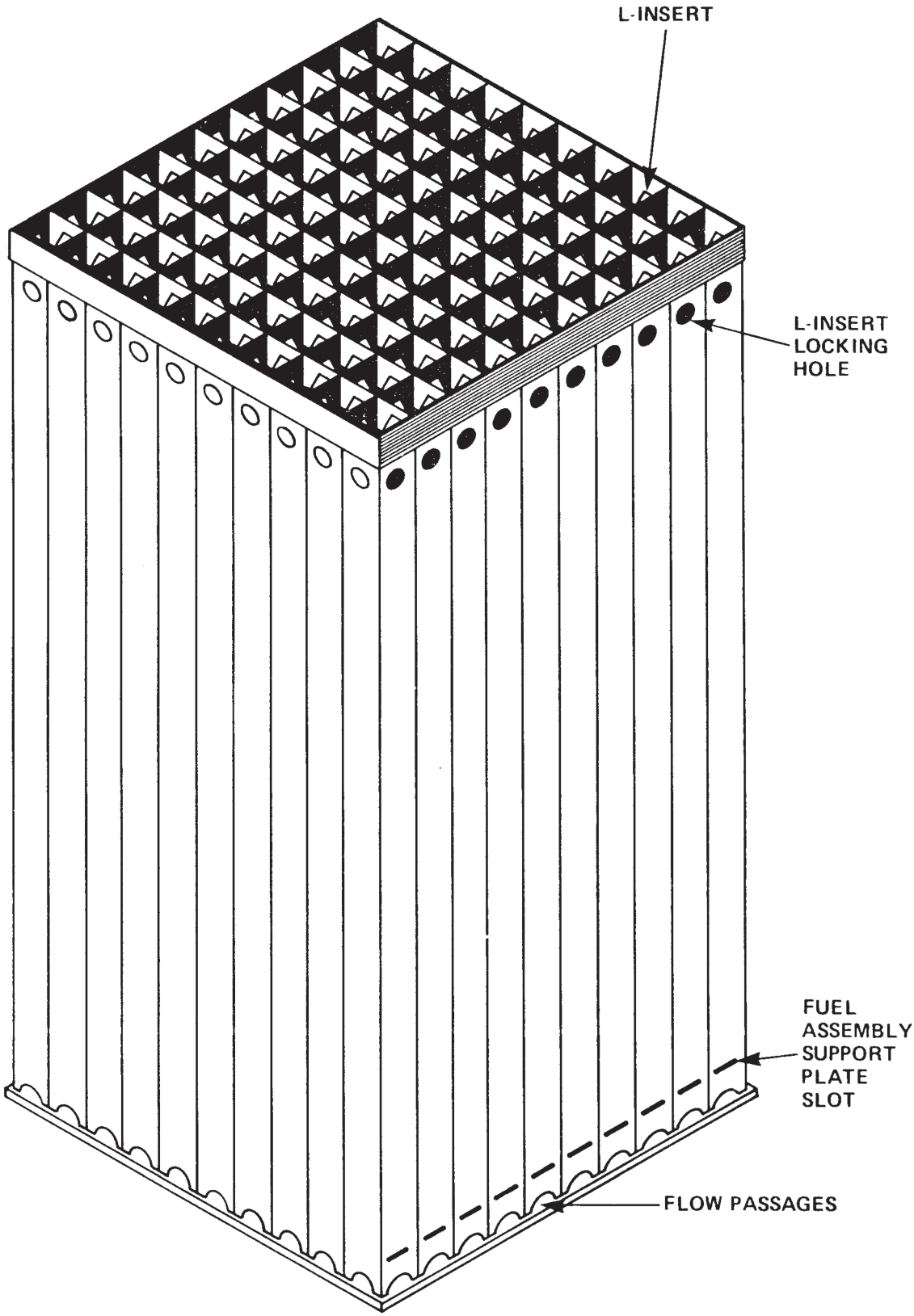

FLORIDA POWER & LIGHT COMPANY
ST. LUCIE PLANT UNIT 2

TYPICAL SPENT FUEL
STORAGE RACK MODULE

FIGURE 9.1-2

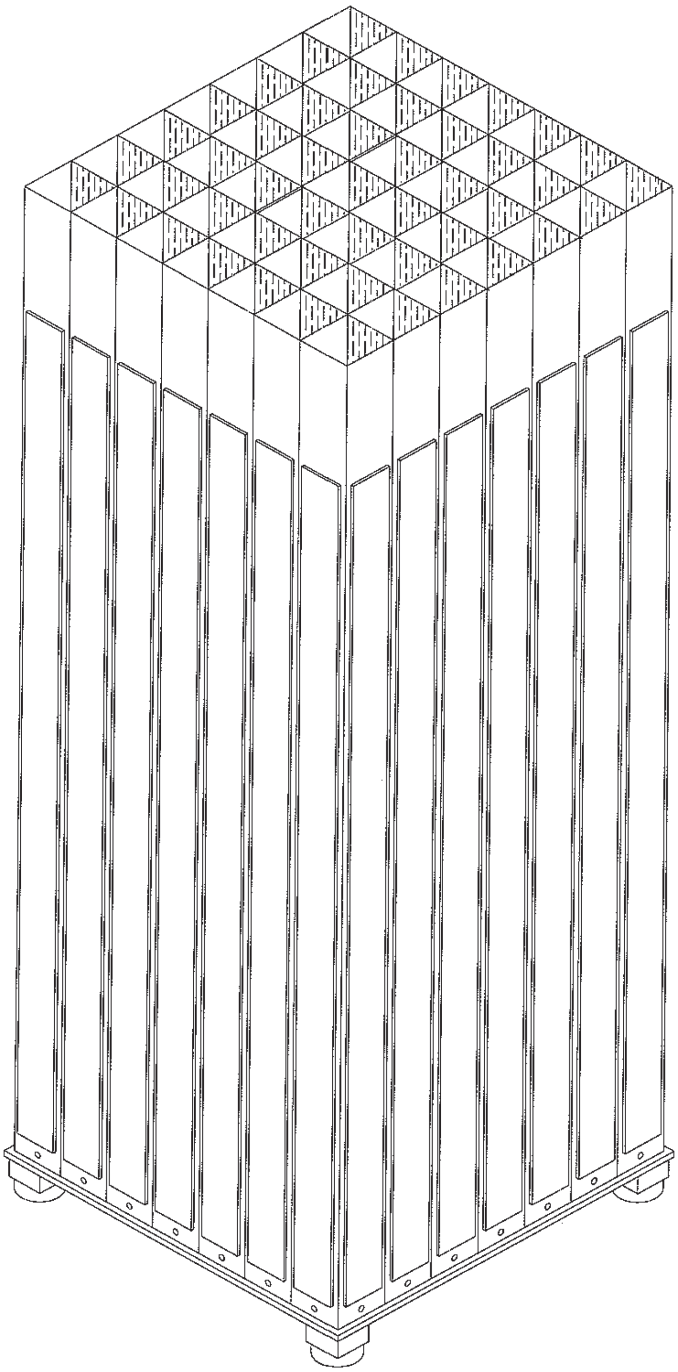

FLORIDA POWER & LIGHT COMPANY
ST. LUCIE PLANT UNIT 2

REGION II FUEL STORAGE RACK - CASK PIT (TYPICAL)

FIGURE 9.1-2a

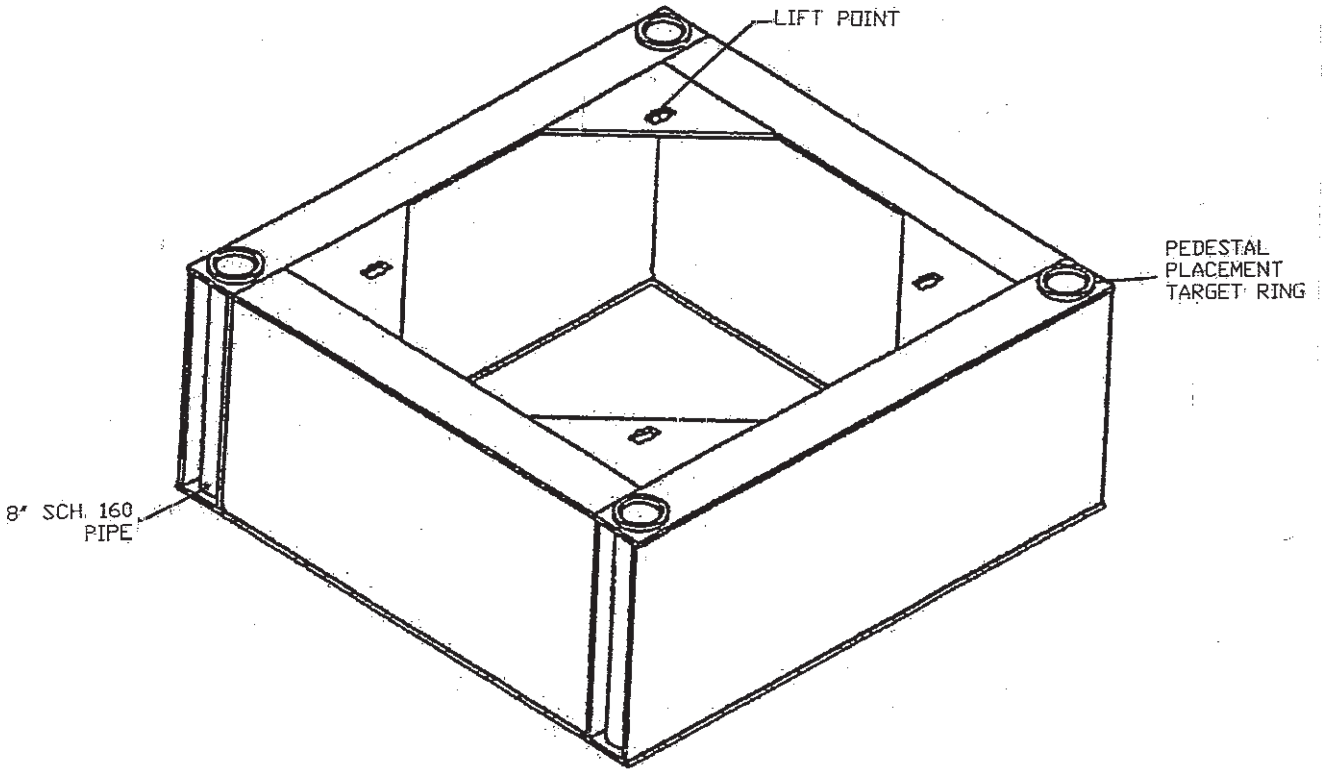

FLORIDA POWER & LIGHT COMPANY
ST. LUCIE PLANT UNIT 2

FUEL STORAGE RACK PLATFORM -
CASK PIT RACK (TYPICAL)
FIGURE 9.1-2b

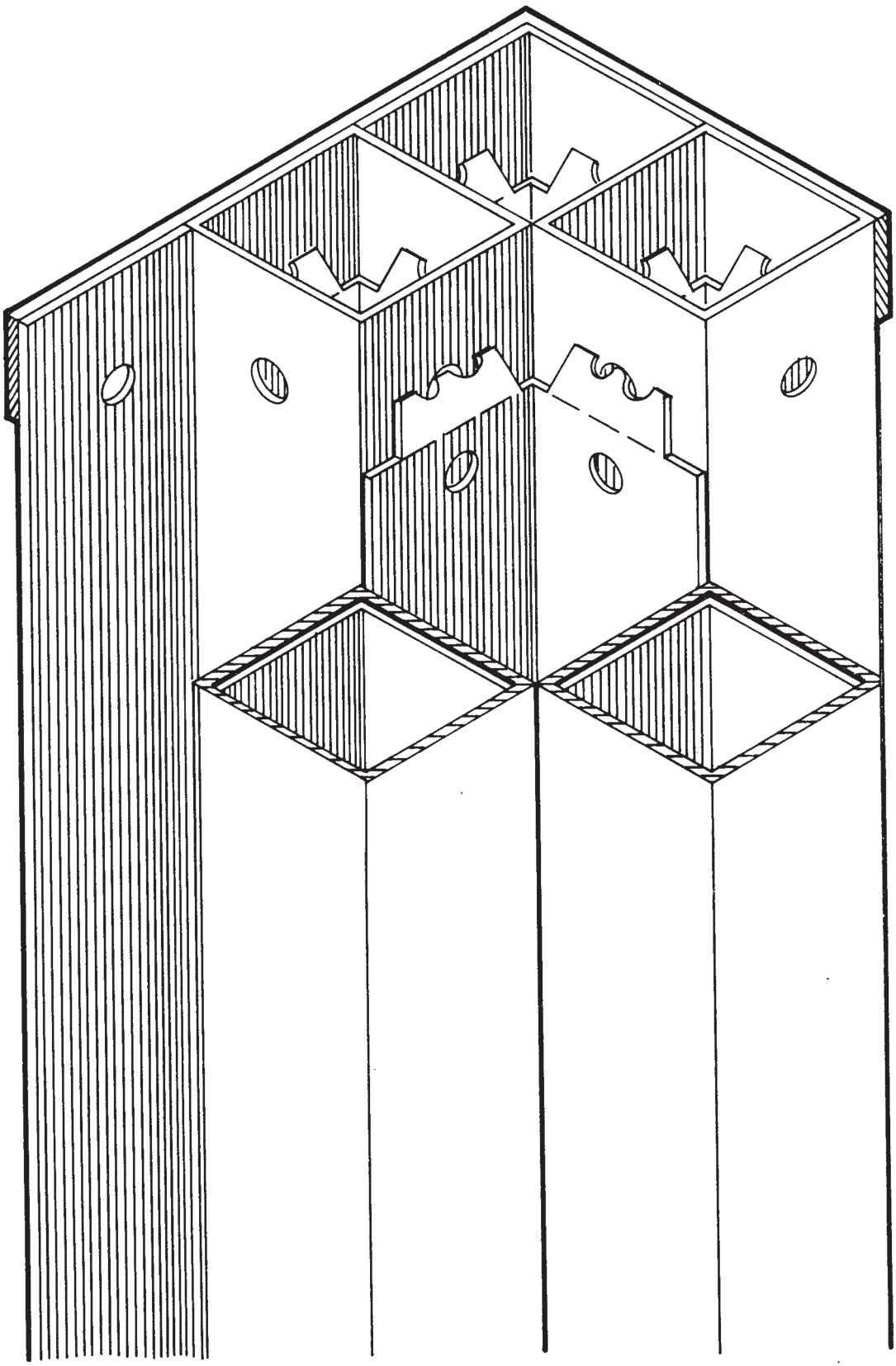

FLORIDA POWER & LIGHT COMPANY
ST. LUCIE PLANT UNIT 2

TYPICAL SPENT FUEL RACK MODULE
L-INSERT

FIGURE 9.1-3a

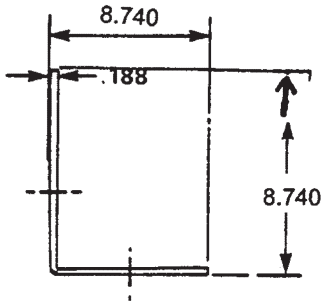

SECTION A-A

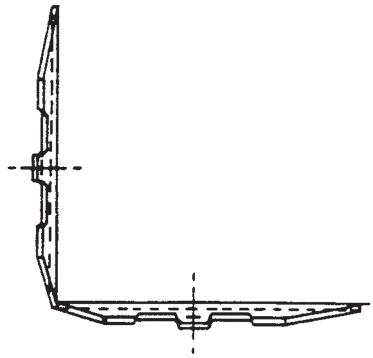

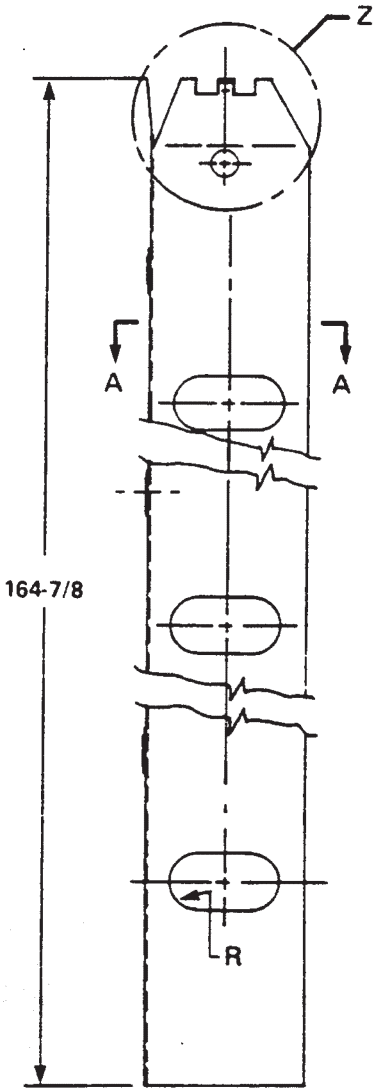

"L" INSERT

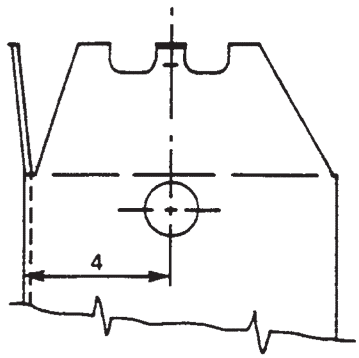

DETAIL Z

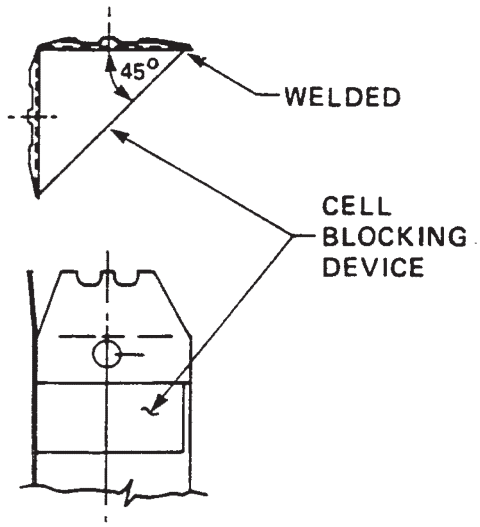

MODIFIED "L" INSERT

FLORIDA POWER & LIGHT COMPANY
ST. LUCIE PLANT UNIT 2

L-INSERTS

FIGURE 9.1-3b

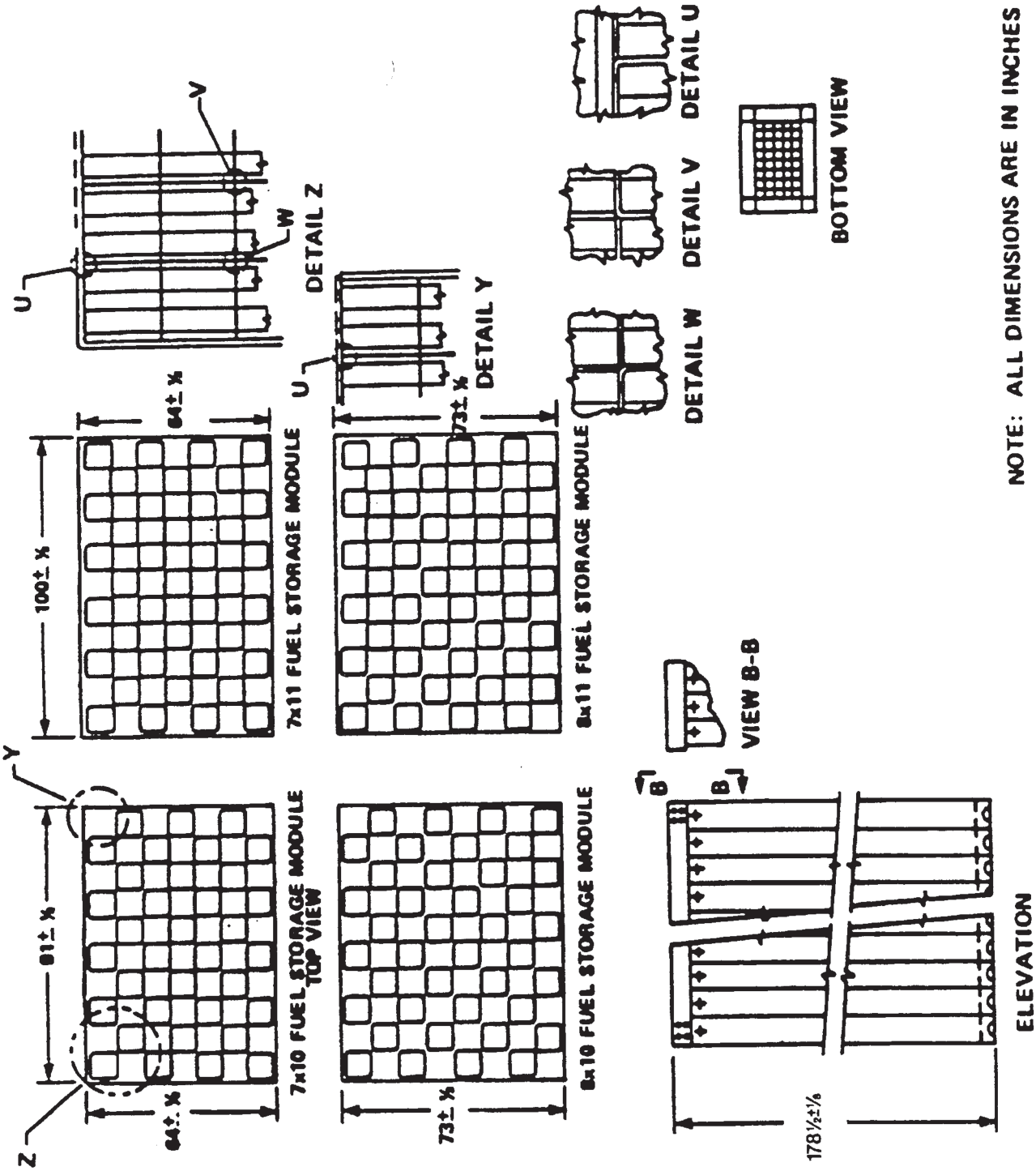

AMENDMENT NO. 8 (9/93)

FLORIDA POWER & LIGHT COMPANY
ST. LUCIE PLANT – UNIT 2

SPENT FUEL STORAGE MODULE

FIGURE 9.1-4

Refer to Drawing
2998-18514

FLORIDA POWER & LIGHT COMPANY
ST. LUCIE PLANT UNIT 2

MAX. CAP. SPENT FUEL STORAGE
MODULE INSTALLATION

FIGURE 9.1-5

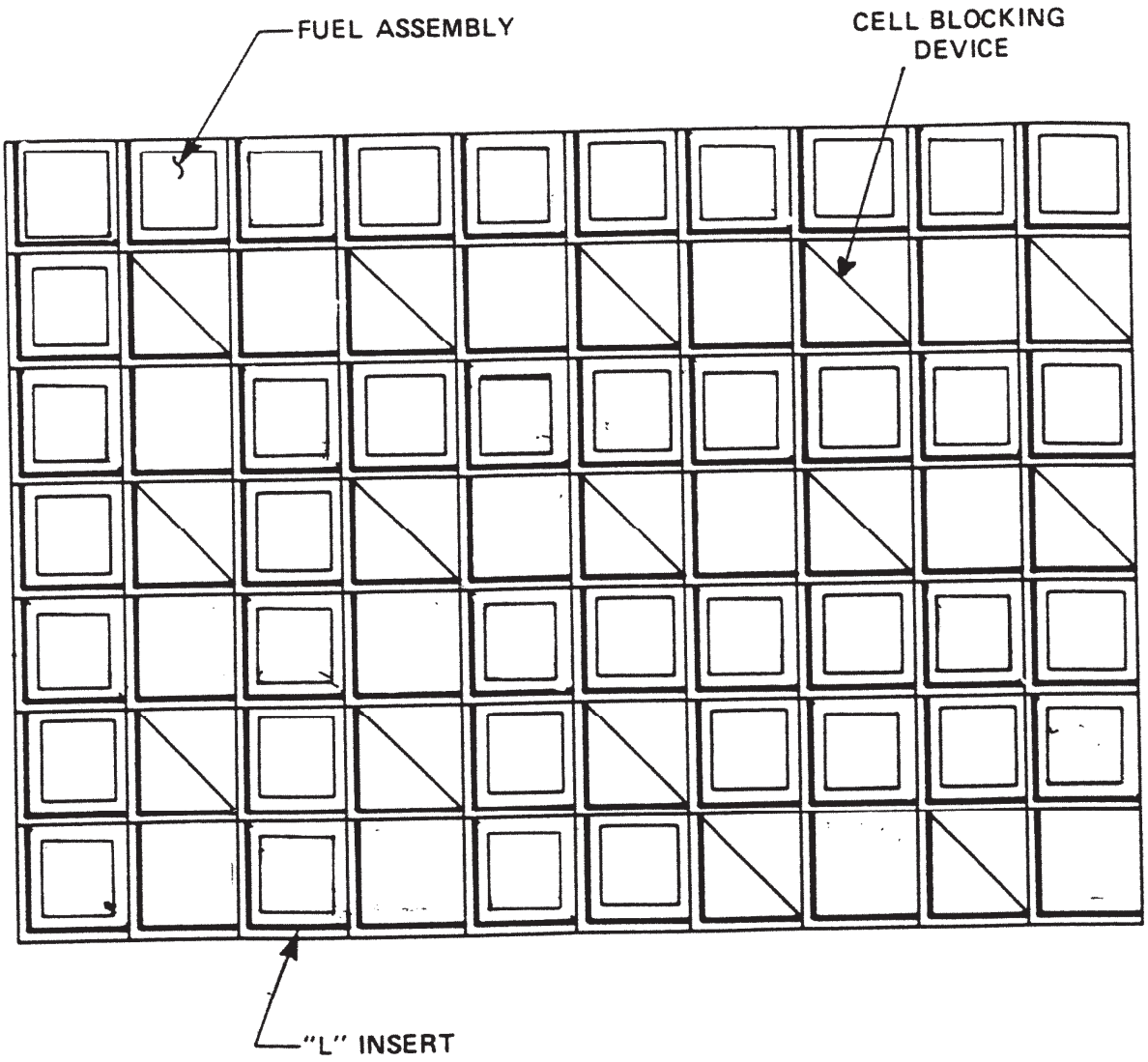

Amendment No. 14 (12/01)

FLORIDA POWER & LIGHT COMPANY
ST. LUCIE PLANT UNIT 2

Typical SPENT FUEL
RACK MODULE FOR REGION I

FIGURE 9.1-5a

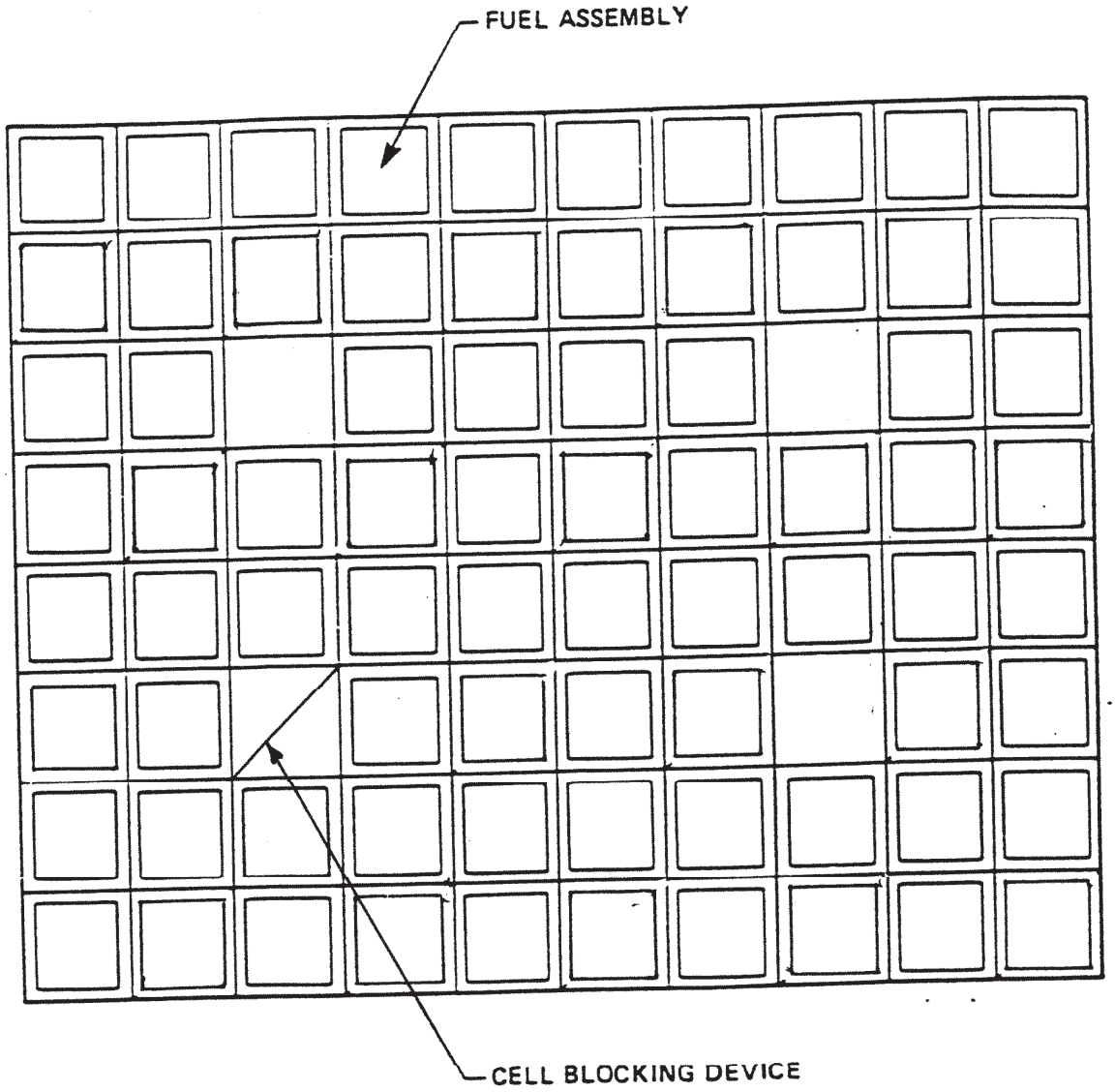

Amendment No. 14 (12/01)

FLORIDA POWER & LIGHT COMPANY
ST. LUCIE PLANT UNIT 2

"TYPICAL" SPENT FUEL STORAGE
RACK MODULE FOR REGION II

FIGURE 9.1-5b

Refer to Drawing
2998-G-078 SH 140

FLORIDA POWER & LIGHT COMPANY
ST. LUCIE PLANT UNIT 2

FLOW DIAGRAM
FUEL POOL SYSTEM

FIGURE 9.1-6

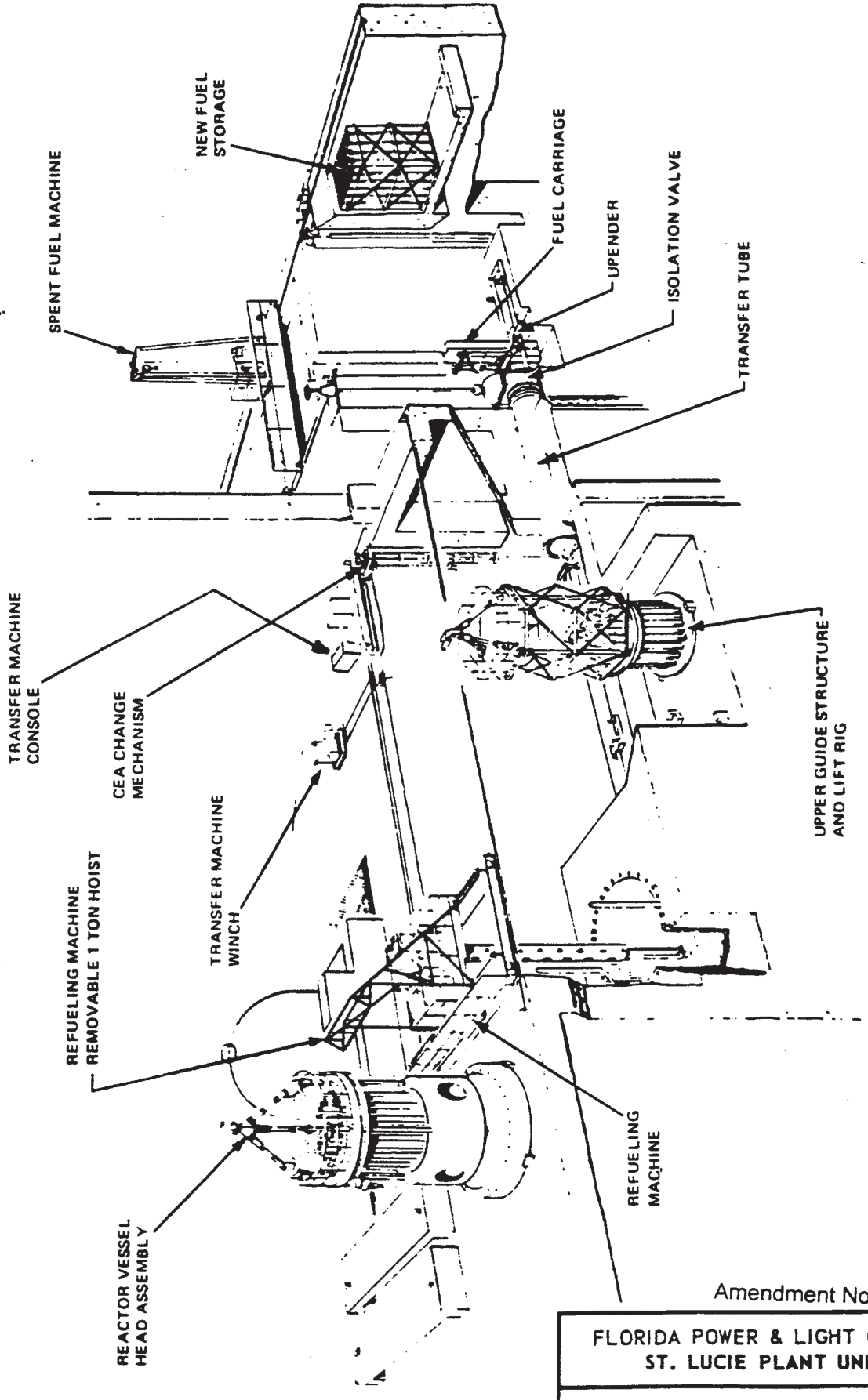

Amendment No. 13 (05/00)

FLORIDA POWER & LIGHT COMPANY
ST. LUCIE PLANT UNIT 2

FUEL HANDLING EQUIPMENT ARRANGEMENT

FIGURE 9.1-7

Refer to Drawing
2998-G-078 SH 145

FLORIDA POWER & LIGHT COMPANY
ST. LUCIE PLANT UNIT 2

FLOW DIAGRAM SPENT FUEL SYSTEM
FIGURE 9.1-7a

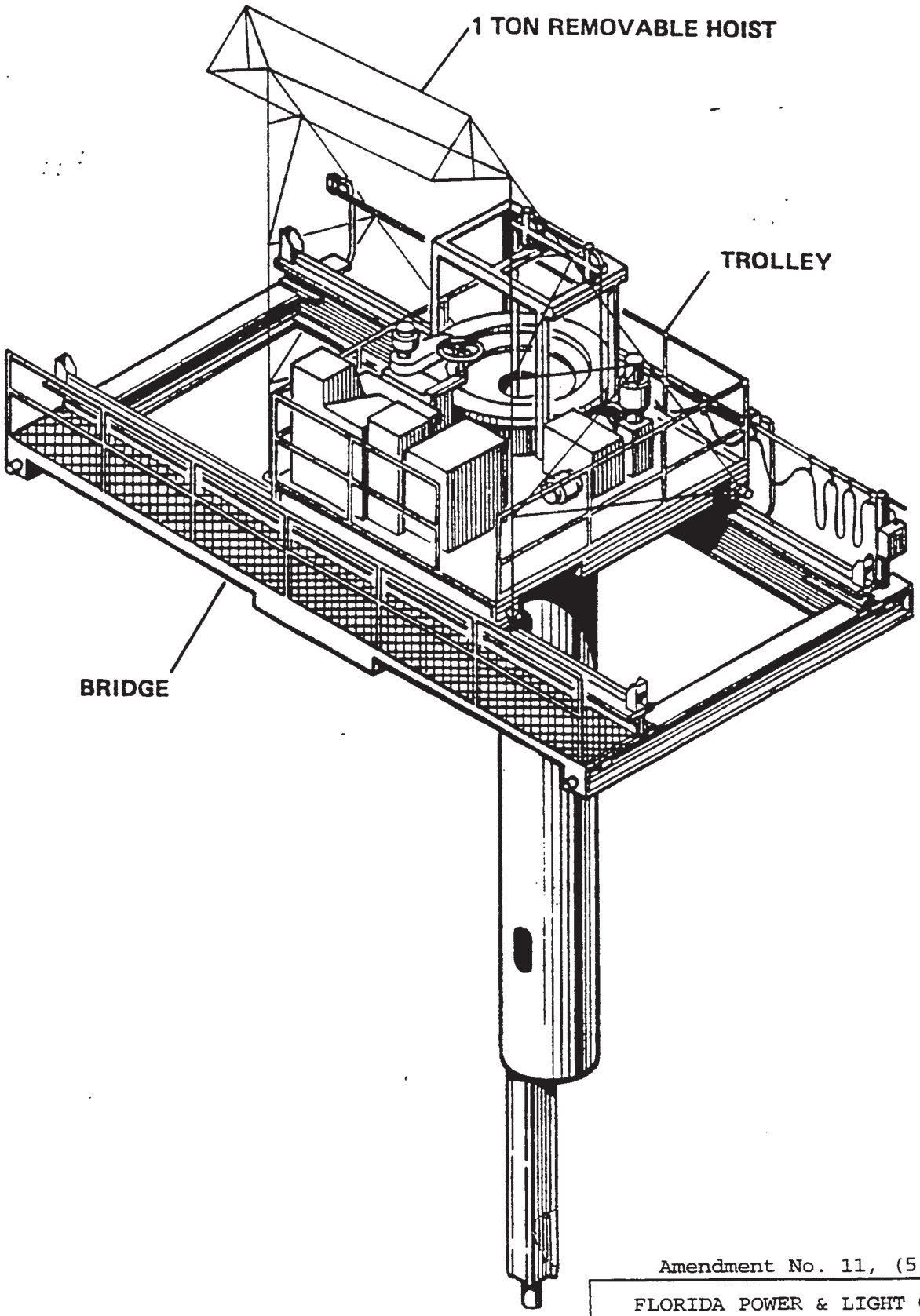

Amendment No. 11, (5/97)

FLORIDA POWER & LIGHT COMPANY
ST. LUCIE PLANT UNIT 2

REFUELING MACHINE

FIGURE 9.1-8

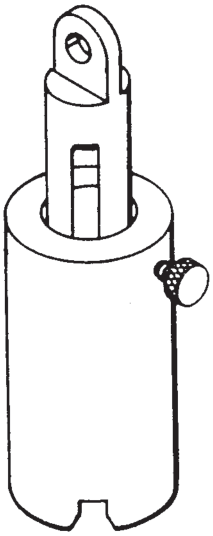

NEW FUEL HANDLING TOOL

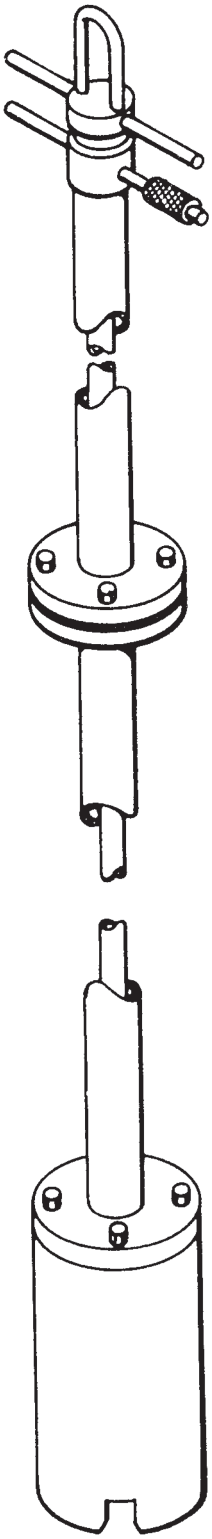

SPENT FUEL HANDLING TOOL

FLORIDA POWER & LIGHT COMPANY
ST. LUCIE PLANT UNIT 2

FUEL HANDLING TOOLS

FIGURE 9.1-10

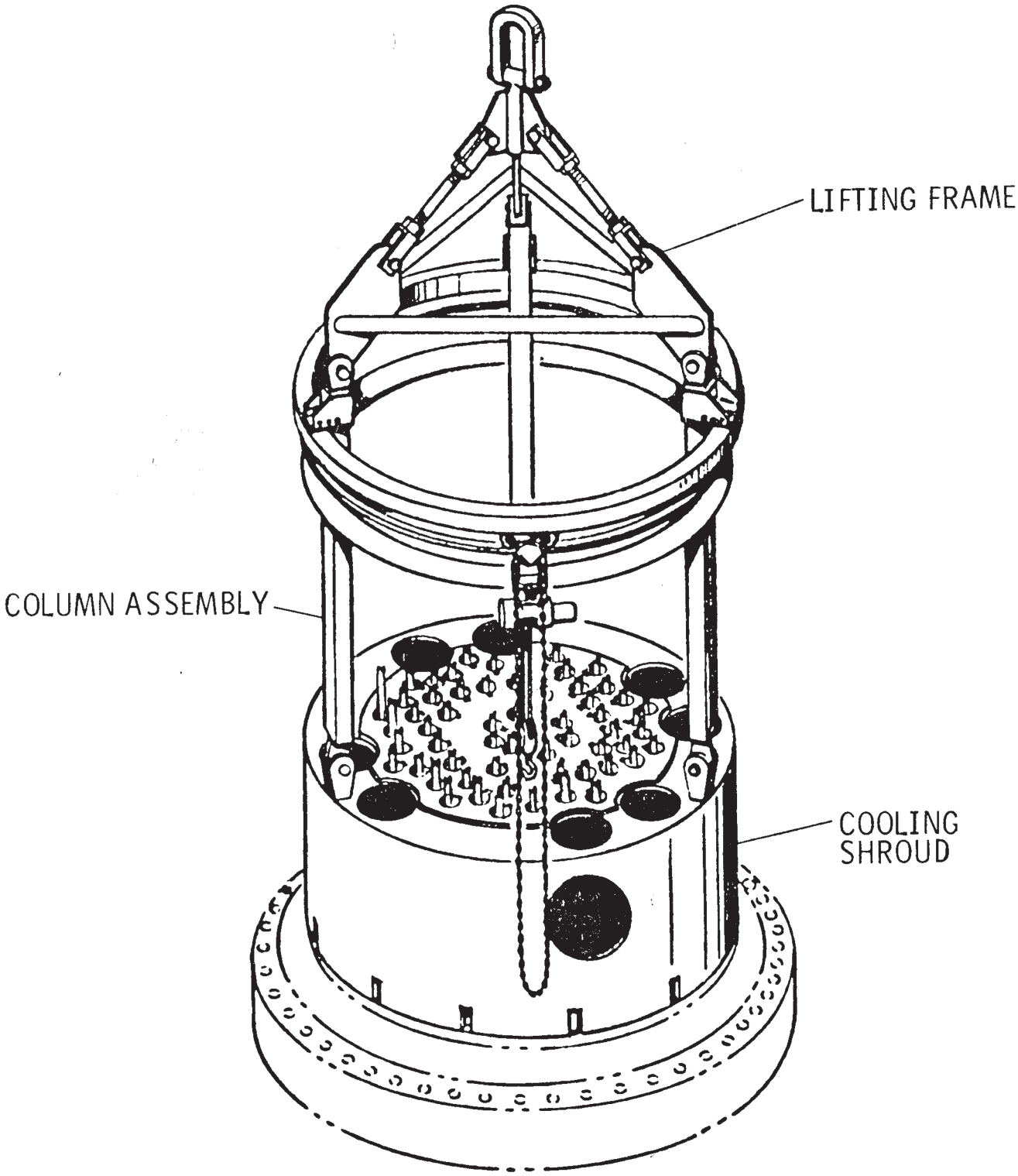

FLORIDA POWER & LIGHT COMPANY
ST. LUCIE PLANT UNIT 2

REACTOR VESSEL HEAD LIFT RIG

FIGURE 9.1-11

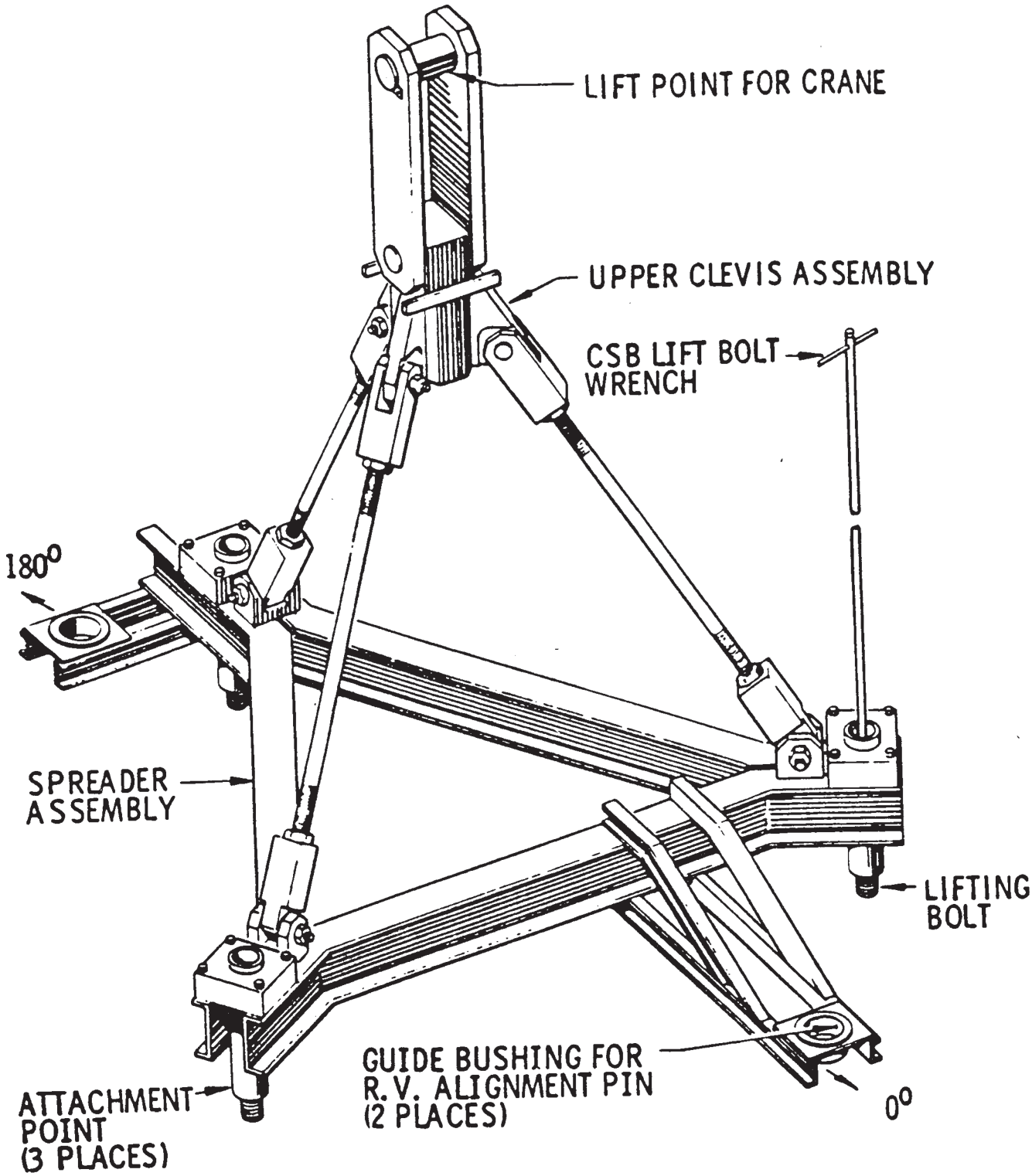

AMENDMENT NO. 5 (4/90)

FLORIDA POWER & LIGHT COMPANY
ST. LUCIE PLANT UNIT 2

CORE SUPPORT BARREL LIFT RIG
FIGURE 9.1-12

REF DWG: 2998-10541 (REV.3)

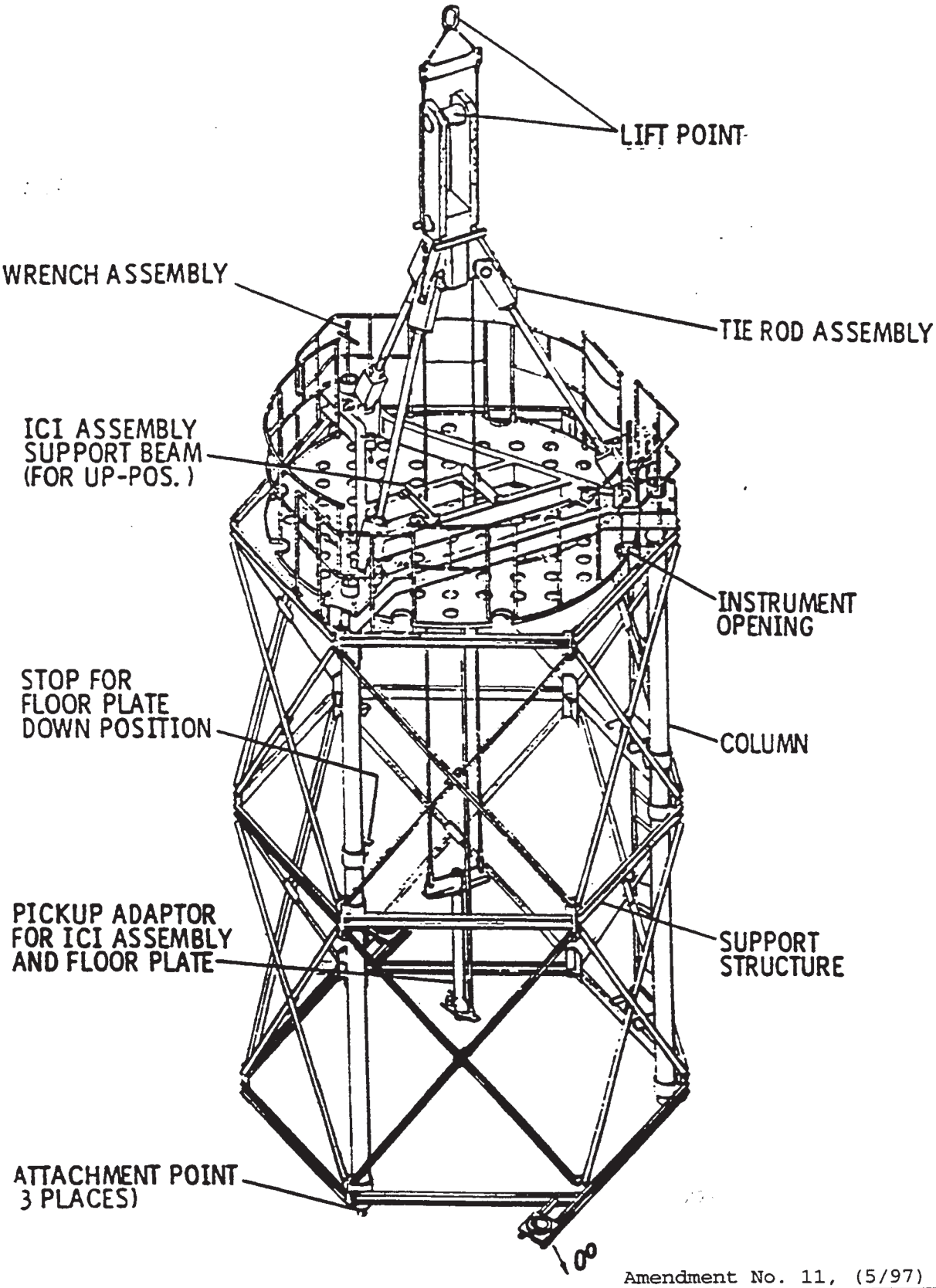

Amendment No. 11, (5/97)

FLORIDA POWER & LIGHT COMPANY
ST. LUCIE PLANT UNIT 2

UPPER GUIDE STRUCTURE
LIFT RIG

REF MANL: 2998-10541

FIGURE 9.1-13

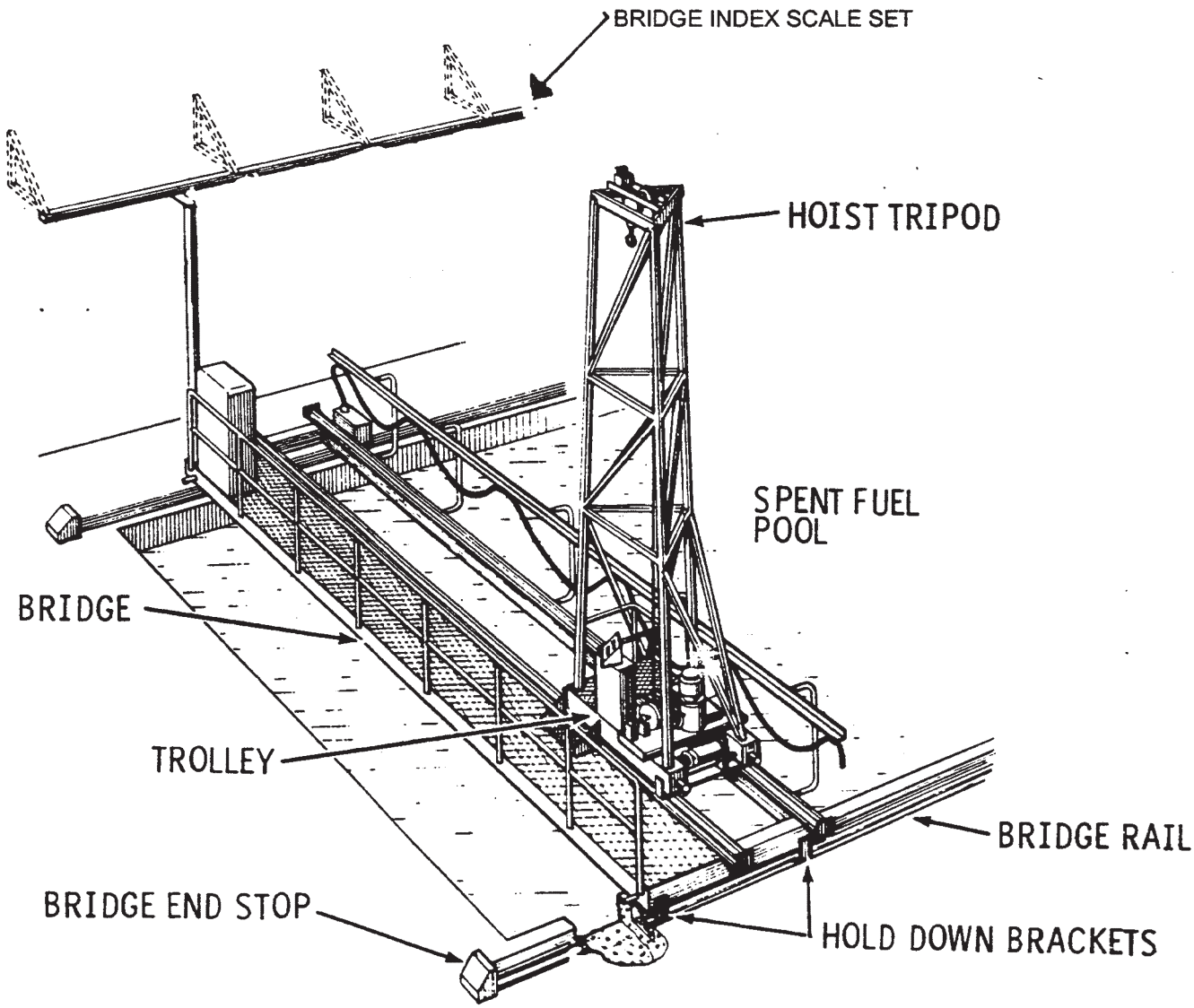

Amendment No. 13 (05/00)

FLORIDA POWER & LIGHT COMPANY
ST. LUCIE PLANT UNIT 2

SPENT FUEL HANDLING MACHINE

FIGURE 9.1-14

Refer to Drawing
2998-3293

FLORIDA POWER & LIGHT COMPANY
ST. LUCIE PLANT UNIT 2

NEW FUEL ELEVATOR -
GENERAL ARRANGEMENT

FIGURE 9.1-15

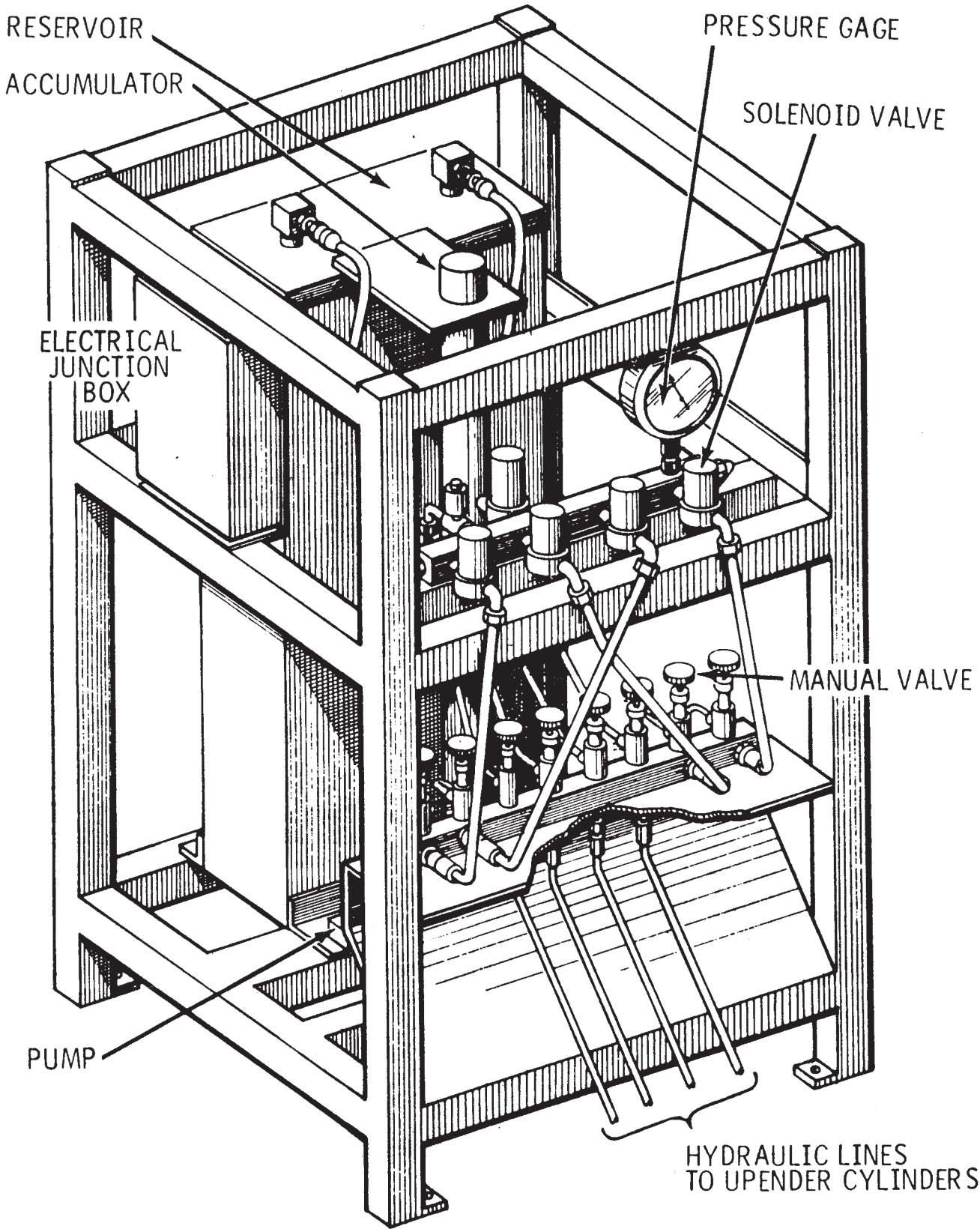

FLORIDA POWER & LIGHT COMPANY
ST. LUCIE PLANT UNIT 2

HYDRAULIC POWER UNIT

FIGURE 9.1-19

Refer to Drawings:
2998-23767
2998-23768
2998-23769
2998-23770
2998-23771
2998-23772

FLORIDA POWER & LIGHT COMPANY
ST. LUCIE PLANT UNIT 2

PERMANENT REACTOR
CAVITY SEAL RING

FIGURE 9.1-20

DELETED

EC291265

Amendment No. 25 (04/19)

FLORIDA POWER & LIGHT COMPANY
ST. LUCIE PLANT UNIT 2

FIGURE 9.1-21

9.2 WATER SYSTEMS

9.2.1 INTAKE COOLING WATER SYSTEM

The Intake Cooling Water (ICW) System serves as a heat sink for the closed loop Component Cooling Water, Turbine Cooling Water and Steam Generator Blowdown Systems. The system flow diagram can be seen on Figure 9.2-1. ICW System design data are presented in Table 9.2-1.

9.2.1.1 Design Bases

The ICW System is designed to:

a. provide a heat sink for the Component Cooling Water System, Turbine Cooling Water System and steam generator blowdown heat exchangers.

b. provide a heat sink for the Component Cooling Water System under design basis accident conditions, assuming a single failure coincident with a loss of offsite power.

c. withstand hurricane loadings, tornado loads or maximum flood levels without loss of safety function.

d. permit periodic inspection and testing of equipment to assure system integrity and capability.

e. withstand the effects of postulated missiles (refer to Section 3.5).

f. withstand the environmental design conditions discussed in Section 3.11.

The intake cooling water pumps, the piping and valves, and the component cooling water exchanger loop, as defined on Figure 9.2-1 are designed to seismic Category I and Quality Group C requirements as per Regulatory Guide 1.29, "Seismic Design Classification," 2/76 (R2) and 1.26, "Quality Group Classification and Standards for Water-, Steam-, and Radioactive-Waste- Containing Components of Nuclear Power Plants," 2/76 (R3), respectively.

9.2.1.2 System Description

The ICW System consists of three pumps and associated piping and valves. The system removes heat from the component cooling water heat exchanger, blowdown heat exchangers and the turbine cooling water heat exchanger and discharges it to the discharge canal. The ICW System is sized to ensure adequate heat removal with a design seawater temperature of 95°F (Note that with implementation of the CCW heat exchanger performance monitoring program, the limiting ultimate heat sink temperature is treated as a variable with an upper limit of 95°F without compromise to any margin of safety. System operation is maintained well within safety design limits for the service conditions of the heat exchangers). Intake cooling water from the intake structure flows through basket strainers located at the inlets of the component cooling water and turbine cooling water heat exchangers, passes through the tube side of the exchangers, and flows to the discharge canal. Lubrication for the intake cooling water pumps is provided by the process stream due to the self-lubricated design of the pumps.

The strainer SS-21-1A (1B) on the inlet of component cooling water heat exchanger 2A (2B) is backwashed automatically on a timer and on a differential pressure signal across the strainer. The debris passes through a fail-closed air operated discharge valve and re-enters the ICW discharge piping downstream of the restricting orifice. Automatic backwashing is not a safety related function. During a design basis accident (DBA), the debris discharge valves HCV-21-7A and HCV-21-7B are closed by de-energizing the pilot solenoid valve via a SIAS trip to prevent flow diversion past the heat exchanger. No credit is taken for de-energizing the CCW Heat Exchanger inlet strainer control panel, which also results in closure of the debris discharge valve. As with the original manually backwashed strainer, the full flow bypass can be utilized to maintain flow to the CCW heat exchanger in the event of strainer clogging during a DBA.

Part of the CCW heat exchanger performance monitoring program is the ICW performance curves (Reference 3) that are based on an ICW/CCW coupled LOCA containment analysis generated specifically for determining performance requirements for the ICW/CCW System under accident conditions. The analysis limited the CCW supply temperature to less than or equal to 120°F. The ICW performance curves were generated based on a thermal model of the CCW heat exchanger, using data from the 2008 Unit 1 CCW heat exchanger performance tests. The worst case observed fouled condition was extrapolated to accident heated loads and the required ICW inlet temperature was determined for varying ICW flow and CCW heat exchanger tube plugging. The calculation then determined the allowable pressure drop across the CCW heat exchanger (tube side) and strainer under normal operating conditions based on ICW inlet temperatures, ICW pump performance, CCW heat exchanger plugging conditions, minimum ICW flow through the CCW heat exchanger at normal operating conditions and accident condition requirements. The ICW performance curves used in the CCW heat exchanger performance monitoring program bounds the ICW conditions required to remove accident heat loads for the LOCA containment analysis discussed in Section 6.2.

The following valves are provided for isolation or automatic control functions. The Turbine Cooling Water and Steam Generator Blowdown Systems, which are classified as non-nuclear safety, are automatically isolated from the safety related portions of the ICW System by valves MV-21-2 and 3 upon receipt of a safety injection actuation signal (SIAS). Isolation of the non-essential portion from these essential portions of the ICW System can also be manually initiated either locally or from the control room. Butterfly valves TCV-14-4A and 4B (one in each header), located at the outlet of the component cooling water heat exchanger, automatically control outlet water flow from the exchanger. They are modulated by the outlet water temperature of the shell side of the component cooling water heat exchanger. Although these valves are normally operated in automatic, manual control is used when under Operations administrative control to perform testing. The automatic butterfly valves (TCV-13-2A,B), located at the outlet of the turbine cooling water heat exchangers, are controlled by the shell side outlet temperature of the heat exchangers and they control intake cooling water flow.

The ICW System is divided into two redundant supply header systems designated A and B. Both header systems, each aligned with an intake cooling water pump, supply normal plant operating and shutdown requirements. However, during accident conditions, one pump and header is adequate to supply the required cooling water to one component cooling water heat exchanger. In the event that either pump 2A or 2B fails, intake cooling pump 2C may be aligned with either header A or B by manually positioning of the pump discharge header cross-connect valve. The turbine cooling water heat exchangers and blowdown heat exchangers are supplied by nonessential headers which are automatically isolated on SIAS by valves MV-21-2 and 3. If these valve operators were to be reopened locally after a postulated accident, an alarm and valve open indication is produced in the control room. Under administrative control and

procedures, the control room operator in such a case would reclose the valves from the control room. MV-21-2 and 3 are subject to the requirements of NRC Generic Letter 89-10.

Similar to the issues discussed in NRC Generic Letter 2008-01 and SER 2-05, the presence of unanticipated gas voids within the Intake Cooling Water System can challenge the ability of the system to perform its design functions due to issues such as gas binding, water hammer, injection delay times, etc. The ICW system presents little or no opportunity for gas intrusion or air entrainment. Operating experience shows that the fill, vent, and surveillance operations procedures for the ICW system are adequate to assure acceptable system performance following maintenance or operational activities that could result in gas void formation.

The normal heat removal requirements of the ICW System for the component cooling water heat exchanger, turbine cooling water heat exchangers and the open blowdown heat exchangers are provided in Subsections 9.2.2, 9.2.7 and 10.4.8. The heat removal requirements during accident conditions are provided in Table 9.2-5.

9.2.1.3 Safety Evaluation

9.2.1.3.1 Single Failure Analysis

Only one intake cooling water pump and one essential header are required to remove the post-accident heat load from one component cooling water heat exchanger. Each component cooling water heat exchanger is capable of post- accident heat removal duty (refer to Subsection 9.2.2). Two redundant full capacity essential headers and three full-capacity pumps are provided, one pump and one header for each component cooling water heat exchanger is provided to assure adequate cooling capability if one system fails. The third pump can be connected to either heat exchanger. Electrical power for each header system is supplied from a separate emergency power bus such that no single electrical failure can prevent operation of at least one of the two header systems.

The redundant essential headers are isolated from each other by two normally closed valves (SB21190 and SB21237) in the tie line connecting the headers. Each essential header is isolated from the nonessential portion of the system by a fail-close valve which closes automatically on SIAS. Each header isolation valve receives a signal from a separate SIAS channel, hence, no single failure can cause both valves to remain open.

A single failure analysis of the Intake Cooling Water System is presented in Table 9.2-2.

9.2.1.3.2 Service Environment

The enclosed intake cooling water pumps and valves are designed to operate under the following environmental conditions: ambient temperature from 30°F to 120°F, 100 percent humidity and a salt-laden atmosphere.

A hypochlorite solution is injected into the seawater upstream of the intake cooling water pumps to control slime formation (see Subsection 10.4.5). The pumps in the ICW System utilize aluminum bronze and/or stainless steel for material protection against corrosion and the system is protected by sacrificial anodes located in the turbine and component cooling water heat exchangers. The ICW System is designed to withstand the corrosive effects of the circulated seawater. Fiberglass- reinforced thermosetting resin pipe spools are used between the carbon steel mains and the aluminum bronze branches to prevent galvanic corrosion. They are

provided under Case N-1552, as approved by Regulatory Guide 1.84 (Rev. 17) "Design and Fabrication Code Case Acceptability, ASME Section III, Division 1." The materials used in the system are compatible with the circulated fluids. A complete listing of component materials is provided in Table 9.2-1.

9.2.1.3.3 Natural Phenomena

The essential components of the ICW System (i.e., those supplying cooling water to the component cooling water heat exchangers) are designed and installed as seismic Category I equipment. That portion of the ICW system supplying cooling water to the Turbine Cooling Water System and the Steam Generator Blowdown System is non-seismic downstream of the ICW structure boundary. The seismic Category I and non-seismic portions of the system are automatically isolated from each other on SIAS. The intake cooling water pumps are located on the intake structure which is designed as seismic Category I. All underground piping in the intake structure area is located in Class I fill. Seismic qualification of system components is demonstrated by manufacturer calculations based on the safe shutdown earthquake accelerations. Discussion of seismic qualification of equipment is given in Subsection 3.9.3 and Section 3.10.

The equipment of the ICW System is housed inside an enclosure on the intake structure so that the system is protected from natural phenomenon such as tornadoes and hurricanes. The enclosure can withstand the effects of tornado wind and missiles or wave action resulting from the probable maximum hurricane. The manually-operated intake cooling water header valves (SB21190 and SB21237) are not affected by hurricane-induced sprays. The power-operated isolation valves (MV-21-2 and 3) are protected from water spray by locating them in the valve pit within a protective enclosure.

Engineering Safety Evaluation JPN-PSL-SENP-94-043 was prepared to allow the temporary removal of the intake structure missile shielding for maintenance activities on the ICW pumps and motors.

To ensure pump operation under flood conditions, the pump motors are located at Elevation 22.8 feet which is above the maximum calculated flood level (refer to Section 3.4). The pump suction columns require four feet of minimum submergence to deliver the design capacity of the pumps. This requirement is met under the minimum water level conditions associated with the maximum probable hurricane postulated for the site as discussed in Section 2.4.

An evaluation was performed to determine the ability of the ICW System to withstand suspended particles being drawn into the system. The evaluation included:

a. Determination of potential for occurrence of suspended matter at the intake cooling water pump suction. This included consideration of initiating events which could result in suspended matter, range of particle size and transport. Details of these aspects can be found in Section 2.4, where it is shown that the potential for induced suspension of sandy materials or even occurrence of high turbidity is small. Maximum possible suspended particle sizes range up to 0.075 mm.

b. Evaluation of system capabilities under conditions of suspended matter. The two major components of the ICW System, the CCW heat exchanger tube side and the ICW pumps are both adequately designed to perform their intended safety

function under adverse conditions such as suspend particles in the flow path. The CCW heat exchangers are protected from larger suspended particles that may be present in the intake structure by the use of basket strainers as shown on Figure 9.2-1. The SS-21-1A and SS-21-1B basket strainers are designed to remove all suspended particles greater than 0.2 inch (5 mm) and are designed to Seismic Category I, Quality Group C requirements. The SS-21-1A and SS-21-1B strainers are also designed to be automatically and manually backwashed with the associated ICW train in service. Should any clogging of a strainer occur, the resulting high differential pressure condition across the strainer is alarmed in the control room, at which point the operator can remove the affected train from service.

If it is assumed that the ICW System flow contains smaller suspended materials such as silt, the following is applicable to the CCW heat exchangers:

a. the CCW heat exchangers are designed for the post-DBA heat load with an 85 percent cleanliness factor.

b. ICW pump operation does not produce velocities in the canal that would maintain silt in suspension, thus any material in suspension in the intake canal quickly settles out.

c. The heat removal capability of a water/silt composition is less than water alone. However, the reduction in heat transfer is not expected to be more than seven to 10 percent.

d. High water velocities in the ICW System scours silt from the tubes. Some accumulation in the water boxes is expected, but blockage of tubes is unlikely due to the scouring effect.

The ICW pumps are capable of pumping intake water possibly containing suspended material or silt without adversely effecting pumping cabability.

9.2.1.4 Testing and Inspections

Each intake cooling water pump is shop-tested at no less than five head-capacity points including the design point to measure capacity head, power input and efficiency. Shop hydrostatic tests on the pump casings are made at 150 percent of the maximum operating pressure. Fluid boundary castings and forgings are nondestructive tested in accordance with ASME Code, Section III, Code Class 3.

Preoperational testing and inspection of the ICW system is discussed in Section 14.0; periodic testing is a part of the Technical Specifications.

By letter L-90-28 dated 01-25-90, FPL provided the response to the recommendations of Generic Letter 89-13, “Service Water System Problems Affecting Safety-Related Equipment”. The generic letter requested licensees to establish a routine inspection and maintenance program to ensure that corrosion, erosion, protective coating failure, silting, and biofouling cannot degrade the performance of the safety-related systems supplied by service water. In

letter L-2000-215, FPL committed to having routine single train inspection intervals every refueling outage for the intake well and safety-related ICW piping.

9.2.1.5 Instrumentation Application

Table 9.2-3 lists the parameters measured by the Intake Cooling Water System instrumentation. The heat exchanger parameters and pump status are monitored either locally or in the control room as identified in Table 9.2-3.

The intake cooling water pumps can be started or stopped from the control room. The pumps receive a start signal upon SIAS.

9.2.2 COMPONENT COOLING WATER SYSTEM

The Component Cooling Water (CCW) System is a closed loop cooling water system that utilizes demineralized water to cool various components as shown schematically on Figure 9.2-2. Design data for the CCW System components are tabulated in Table 9.2-4.

9.2.2.1 Design Bases

The Component Cooling Water System is designed to:

a. provide a heat sink for the reactor auxiliary systems under normal operating and shutdown conditions.

b. provide an intermediate radiological barrier between radioactive systems and the Intake Cooling Water (ICW) System.

c. provide a heat sink for safety related components associated with reactor decay heat removal for safe shutdown or DBA conditions, assuming a single failure coincident with loss of offsite power.

d. withstand safe shutdown earthquake loads, tornado loads or maximum flood levels without loss of safety function.

e. withstand the effects of external and internal missiles as discussed in Section 3.5.

f. withstand the environmental design conditions as discussed in Section 3.11.

The component cooling water pumps, the suction and discharge header A and B piping and valves and the component cooling water heat exchanger, as defined on Figure 9.2-2 are designed to seismic Category I and Quality Group C requirements as per Regulatory Guide 1.29, (R2) and 1.26, (R3), respectively.

To resolve issues relative to NRC Generic Letter 96-06, the CCW system to and from the Containment Fan Coolers (CFCs) was evaluated one time for the effects of water hammer loading.

9.2.2.2 System Description

The Component Cooling Water System consists of two heat exchangers, three pumps, one surge tank, a chemical feed tank, and associated piping, valves and instrumentation. Although the cooling water is not normally radioactive, welded construction is used, where possible, to minimize the possibility of leakage. Self-actuated spring-loaded relief valves are provided for overpressure protection on the shutdown, sample, and letdown heat exchanger inlets as well as on the containment cooling units and waste gas compressors. Design data are presented in Table 9.2-4.

The Component Cooling Water System is arranged as two redundant essential supply header systems (designated A and B) each with a pump and heat exchanger and the capability to supply the minimum safety feature requirements during plant shutdown or DBA conditions. The nonessential supply header (designated N) which is connected to both essential headers during normal operation is automatically isolated from both by valve closure on a safety injection actuation signal (SIAS). During normal operation, the nonessential header supplies cooling water to the following components: sample heat exchangers, boric acid concentrators[1*], waste concentrator*, waste gas compressors, letdown heat exchanger, control element drive mechanism air coolers, the reactor coolant pump seals and motors, condensate recovery sample coolers, steam generator blowdown sample panel, Post Accident Panel and the boric acid radiation monitoring.

The A and B headers serve the following components:

Header A	Header B
Shutdown Heat Exchanger 2A	Shutdown Heat Exchanger
2B Containment Fan Coolers 2A/2B	Containment Fan Coolers 2C/2D
Control Room A/C 3A, 3B, 3C	Control Room A/C 3A, 3B, 3C
HPSI Pump 2A	HPSI Pump 2B
Containment Spray Pump 2A	Containment Spray Pump 2B
Fuel Pool Heat Exchanger 2A/2B	Fuel Pool Heat Exchanger 2A/2B

The A and B header systems are isolated from each other during accident conditions. Pump 2A serves header A and pump 2B serves header B. Pump 2C may be manually aligned with either header A or B by means of the cross-connection valving on the suction and discharge sides of the pumps. Any misalignment between the component cooling water pump 2C motor power and the header's motor-operated valves is annunciated in the control room. Figure 9.2-3 shows the valve arrangement for pumps.

Both the A and B supply header systems pump demineralized cooling water through the shell side of their respective component cooling water heat exchangers, through the components

---

[*] Note: These components are no longer used.

being cooled and back to their respective pumps. The surge tank is connected to the suction side of the pumps and is designed to accommodate volumetric thermal expansion and contraction in the system and to maintain a static pressure head at each pump section. Demineralized makeup water is added to the surge tank through an automatic water level control system by the demineralized water pump. Provisions are also made to supply makeup from the Fire Protection System. Although both essential headers share the surge tank, a baffle divides the lower portion of the tank into two separate compartments, each associated with one of the two essential headers. The cylindrical tank is 11 ft. long and is mounted horizontally. It has a 5.5 ft diameter with a baffle height of 2.5 ft. Makeup water is added when the water level falls below 36 in. and a low water level alarm is initiated in the control room at 29 in. Makeup water is stopped at a surge tank water level of 48 in. and a high water level alarm is initiated in the control room at 54 in. Water level indication on the tank is provided on each side of the baffle. There is also a water level gage mounted on each side of the tank for local indication of tank water level.

Leakage of reactor coolant into the Component Cooling Water System can be detected by an increasing water level in the surge tank and by radiation. A one gpm leak into the tank causes a high water level alarm in eight hours (based on an initial/tank water level of 40 in. in the 66 in. diameter horizontal tank). Any overflow or drainage from the component cooling surge tank is collected by the RAB drain system and routed to the chemical drain tank. The contents in this tank are treated by the Liquid Waste Management System as described in Section 11.2. Subsection 5.2.5 gives description of leak detection by surge tank water level. A radiation monitor is provided in each of the redundant headers on the outlet side of the CCW heat exchangers. Should the radioactivity in the system rise above the setpoint, a high radiation alarm is actuated in the control room and the three way valve of the surge tank which is normally vented to atmosphere, is automatically repositioned. The system operates unvented with relief to the Liquid Waste Management System for overpressured protection.

The CCWs piping and valves are carbon steel. A chemical feed tank in the system permits addition of a corrosion inhibitor.

The following valves are subject to the requirements of NRC Generic Letter 89-10: MV-14-17, MV-14-18, MV-14-19 and MV-14-20.

9.2.2.3 Safety Evaluation

9.2.2.3.1 Performance Requirements and Capabilities

The Component Cooling Water System is capable of providing sufficient cooling capacity to cool reactor coolant auxiliary systems components with two pumps and one heat exchanger in operation, although, during normal operation, flow is established through both heat exchangers. Two pumps and two heat exchangers are used during normal plant shutdown; however, if only one heat exchanger is available, the cooldown rate is decreased but plant safety is not jeopardized (refer to Table 9.2-5).

Safety-related equipment cooling requirements are met following a postulated DBA with only one pump and one heat exchanger operating, even though both essential header systems are available.

The component cooling water pump motors are connected to separate emergency electrical buses which can be energized by the diesel generators. The A and B pump motors are

connected to the respective A and B emergency bus counterparts and the third pump is connected to the AB bus which is remote manually connected from the control room to either A or B emergency bus.

The CCW to the reactor coolant pumps are supplied from non-essential CCW Header N, which is designed as a non-seismic, non-safety class header. The design has accommodated the potential for loss of CCW to the reactor coolant pumps (RCP) in three ways, viz, (1) the pumps and motors have the capability to cope with short-term interruption of cooling water, (2) diverse and redundant methods of RCP CCW monitoring is provided to the control room operators, and (3) an automatic reactor trip is initiated if cooling water is lost for 10 minutes or more, negating the need for forced RCS core heat removal thus allowing for the tripping of the affected RCPs .

Should CCW be unavailable to a pump, the operator has the following reactor coolant pump instrumentation information in the control room for each pump.

a. Pump seal heat exchanger temperature indication and alarm

b. Motor upper guide bearing temperature indication

c. Motor lower guide bearing temperature indication

d. Motor thrust bearing upper temperature indication and alarm

e. Motor thrust bearing lower temperature indication and alarm

f. Pump seal controlled bleed-off temperature indication

g. CCW flow indications and low CCW flow alarms from RCPs.

The reactor trip upon a loss of component cooling water to the reactor coolant pump is not required for reactor protection. The reactor trip upon loss of component cooling water is delayed for ten (10) minutes after it reaches the low flow setpoint. The instrumentation that alerts the control room operators to the cause of the reactor trip includes the above listed instrumentation and alarms, and the RPS low CCW flow bistable pre-trip and trip units and alarms which are described in Section 7.2, Reactor Protection System.

Reactor Coolant Pump alarms and indication are shown on a Distributed Control System (DCS) driven flat panel display located on RTGB 203.

From the above it is concluded that sufficient intelligence is available to the operator to monitor RCP operation and to take timely corrective action if required. Suitable operating procedures are developed to insure an orderly shutdown. The auto trip on loss of CCW is designed to Reactor Protective System standards, i.e., IEEE 279-1971 requirements are complied with (see Section 7.2).

The containment isolation actuation signal (CIAS) is generated by either high containment pressure or high containment radiation or a safety injection actuation signal. The high containment pressure signal also generates a safety injection actuation signal (SIAS) which in turn generates a reactor trip. Lines important to plant operation, such as CCW to the RCPs are isolated only on SIAS. Thus an inadvertent CIAS generated by high radiation does not stop CCW to the RCPs, where as an inadvertent high-pressure signal generating SIAS both trips the reactor and stops CCW to the RCPs.

In this manner the design precludes consideration of RCP operation without CCW due to a spurious CIAS signal.

9.2.2.3.2 Single Failure Analysis

The Component Cooling Water System is arranged into two redundant and independent essential supply systems, each with a pump and heat exchanger and the capability to supply the minimum complement of safety related equipment required for safe shutdown or DBA conditions. The CCW pumps are physically separated by 18 feet in order to assure component independence.

Automatic valves isolate the N-header from the two essential headers in the event of an accident. Upon occurrence of a LOCA, the valves close automatically (on SIAS), thereby isolating the non- essential header from the essential headers and the essential headers from each other. Each of the two valves at a cross-connection receives a signal from a separate SIAS channel so that no single failure can cause both valves to remain open. If one essential header should fail, the remaining redundant essential header assures availability of at least one set of equipment and piping for accident service.

The cooling water surge tank is common to both essential headers but is partitioned to provide independence. Should a moderate energy crack occur in the CCW system a low level in the surge tank would automatically isolate the N-header by closing valves HCV-14-8A, 8B, 9, 10. Consequently, there is no single failure that could prevent the Component Cooling Water System from performing its safety function. The single failure analysis is presented in Table 9.2-6.

9.2.2.3.3 Service Environment

The component cooling water pumps, heat exchangers and associated piping and valves are located inside the component cooling water building and are designed to operate under the following environmental conditions: ambient air temperature from 30°F to 120°F, 100 percent humidity, and a salt-laden atmosphere. The building protects the components from other potential environmental conditions resulting from extreme natural phenomena.

Except for seismic Category I piping serving the containment fan coolers, there are no safety related Component Cooling Water System components located within the containment vessel. The containment post-accident environment does not affect operation of the Component Cooling Water System. Section 3.11 provides the environmental conditions associated with safety related components.

9.2.2.3.4 Natural Phenomena

The components of the Component Cooling Water System including cooling water pumps, heat exchangers and piping which are essential for safe shutdown or to mitigate the effects of a DBA are designed and installed as seismic Category I equipment. The nonessential portions of the system are not seismic Category I and are isolated automatically from the seismic Category I portions upon SIAS. The isolation valves are seismic Category I.

The pumps and heat exchangers are located inside a seismic Category I building. Seismic qualification of system components has been demonstrated by manufacturer calculations and is discussed in Subsection 3.9.3.

The Component Cooling Water System is protected from tornado winds and missiles by the Component Cooling Water Structure and Reactor Auxiliary Building.

Component cooling water system equipment susceptible to flood damage is protected by locating all safety related components above the maximum expected water level and wave runup during probable maximum hurricane as discussed in Section 3.4.

9.2.2.4 Testing and Inspection

Hydrostatic tests at 150 percent of design pressure are performed in the shop on the heat exchangers. Performance tests to demonstrate design requirements are conducted and heat transfer characteristics are verified after installation. Eddy current tests of all tubes are performed in accordance with ASTM B-111, Paragraph 10, for entire tube cross sections. All pressure- containing welds are checked by radiographic examination.

Hydrostatic tests to 150 percent of maximum operating head is performed in the shop on each pump casing. Performance tests are performed on each pump characteristic. Nondestructive testing is performed on welds, forgings and castings in accordance with the requirements of ASME Code, Section III, Code Class 3 equipment.

Properational testing and inspection of the CCW system is discussed in Section 14.0; Periodic testing is a part of the Technical Specifications.

By letter L-90-28 dated 01-25-90, FPL provided the response to the recommendations of Generic Letter 89-13, “Service Water System Problems Affecting Safety-Related Equipment”. The generic letter requested licensees to establish a routine inspection and maintenance program to ensure that corrosion, erosion, protective coating failure, silting, and biofouling cannot degrade the performance of the safety-related systems supplied by service water. In letter L-2000-215, FPL committed to having routine single train inspection intervals every refueling outage for the intake well and safety-related ICW piping.

As discussed in NRC Generic Letter 2008-01 and INPO SER 2-05, the presence of unanticipated gas voids within fluid systems can challenge the ability of systems to perform their design functions due to issues such as gas binding, water hammer, injection delay times, etc. Component Cooling Water System alarm response and operating procedures provide detection and recovery actions to address air intrusion.

9.2.2.5 Instrumentation Application

Table 9.2-7 gives a functional listing of component cooling water instrumentation.

The pumps and heat exchangers have diverse parameters measured to confirm the correct operation of the equipment involved. The monitoring of flow, temperature and pressure at the points indicated in Table 9.2-7 and Figure 9.2-2 provides the control room with information for operating the essential and nonessential (N) header systems.

The pumps receive a start signal on SIAS. The pumps can be also started and stopped from the control room.

9.2.3 PRIMARY MAKEUP AND DEMINERALIZED WATER SYSTEMS

The Primary Makeup Water (PMW) System and Demineralized Water (DW) System both serve no safety function since neither is required to achieve a safe shutdown nor mitigate the consequences of an accident.

9.2.3.1 Primary Makeup Water System

The PMW System is shown schematically on Figure 9.2-4. Design parameters for the primary water storage tank and the primary water pumps are listed in Table 9.2-8.

9.2.3.1.1 Design Basis

The function of the PMW System is to:

a. Store the primary grade water in a manner which inhibits gases from dissolving in the primary grade water, and

b. Distribute primary grade water to the following:

   1) The Chemical and Volume Control System

   2) Waste Management System

   3) Fuel pool

   4) Pressurizer quench tank

   5) Reactor drain tank

   6) Reactor vessel head decontamination tank and to other systems and or components as shown on Figure 9.2-4

   7) Refueling water storage tank.

9.2.3.1.2 System Description

Water from the common site makeup demineralizer (installed during St. Lucie Unit 1 construction) is supplied to the primary water storage tank located north of St. Lucie Unit 2 CCW Building (refer to Figure 1.2-1). The use of a diaphragm in the primary water storage tank helps to prevent aeration of the water. PMW from this tank is supplied as makeup to the Chemical and Volume Control System by means of two primary water pumps. The Chemical and Volume Control System maintains Reactor Coolant System inventory by charging PMW to the Reactor Coolant System. (Refer to Subsection 9.3-4). The primary water pumps also supply PMW to the Waste Management System and the fuel pool.

The PMW supply line to equipment located inside containment is isolated by Isolation Valves

HCV-15-1 and V15328. This isolation system is designated to seismic Category I and to Quality Group B requirements. If HCV-15-1 is open, it closes automatically upon receipt of a CIAS signal, as described in Subsections 6.2.4 and 7.3.1.

9.2.3.1.3 System Evaluation

The PMW System serves no safety function. PMW System function is not required to achieve a safe shutdown nor is it required to mitigate the consequences of design basis events. Except for the portion of the supply line penetrating containment, the PMW System is designated non-nuclear safety. In accordance with the requirements of General Design Criteria 56, the supply line which penetrates Containment is provided with one automatic isolation valve outside containment and a check valve inside containment (refer to Figure 9.2-4).

9.2.3.1.4 Testing and Inspection

Each component is inspected and cleaned prior to installation into the system. The system is operated and tested initially to ensure proper operation, that instruments are calibrated, and that automatic controls are for actuation at the proper setpoints.

9.2.3.1.5 Instrumentation Application

Instrumentation for the PMW System is listed in Table 9.2-9. The instrumentation monitors and controls the water level in the primary water tank and monitors operation of the primary water pumps. One of the two primary water pumps is started either by hand switch in the control room or by local push button. The other primary water pump acts as standby and is automatically started on low pump discharge header pressure, a condition which is alarmed in the control room.

The flow of water into the primary water tank is controlled by a level control valve in the intake header to the tank. High and low water levels in the tank are annunciated. The PMW to equipment located in the containment is isolated on a CIAS signal (see Tables 6.2-52 and 53 for data on isolation valves) by valve closure. The isolation valve can also be closed from the control room.

Interlocks are provided to automatically stop the waste condensate pumps and boric acid condensate pumps which discharge to the primary water storage tank upon high water level in the tank. This will prevent liquid waste overflow from the primary water storage tank.

9.2.3.2 Demineralized Water System

The DW System is shown schematically on Figure 9.2-4.

9.2.3.2.1 Design Bases

The function of the DW System is to distribute a supply of water for makeup to various systems and for laboratory use.

9.2.3.2.2 System Description

Water from the common site makeup demineralizer (installed during St. Lucie Unit 1 construction) at the required rate and pressure is received by the DW System, which supplies the following St. Lucie Unit 2 services:

a. Diesel generator cooling water makeup

b. Condensate recovery tank

c. Radiochemistry lab

d. Turbine Cooling Water System surge tank

e. Component Cooling Water System surge tank

f. Steam Generator Blowdown System surge tank

g. Sample room sink

h. Instrument calibration shop

9.2.3.2.3 System Evaluation

The DW System serves no safety function and no DW System line penetrates the containment; therefore, the system is designated non-nuclear safety. However, those portions of the DW System which enter and are routed in the Diesel Generator Building are seismically analyzed to preclude their failure during a seismic event. The DW System is shown on Figure 9.2-4.

9.2.3.2.4 Testing and Inspection

Piping and valves of the DW System are inspected and cleaned prior to installation. The system is operated and tested initially to ensure proper operation.

9.2.3.2.5 Instrumentation Application

There are no instrument applications in the St. Lucie Unit 2 DW System.

9.2.4 SERVICE AND POTABLE WATER SYSTEM

The Service and Potable Water System flow diagram for piping inside the reactor auxiliary building is presented on Figure 9.2-7.

9.2.4.1 Design Basis

The Service Water System supplies water of sufficient quantity and pressure to the plant washdown stations, decontamination facilities, and potable water system. This system is a common site service water supply for both St. Lucie Units 1 and 2 (installed during St. Lucie Unit 1 construction).

The potable water system supplies water for human consumption and for plumbing fixtures, laundry equipment, laboratory and for other selected equipment.

Historically, the sanitary system has contained very low levels of licensed material. Disposal of these wastes is within the restrictions of the State of Florida Regulation (10D-91.463) and has been approved by the Florida Department of Health, Bureau of Radiation Control. The State of Florida, as an "Agreement State," maintains jurisdiction over disposal of very low level radioactive waste. Approval of this disposal is therefore governed by the Florida Administrative Code, which in essence mirrors NRC regulations. (Reference 1 and 2)

The Standard Plumbing Code (1975 Edition) of the Southern Building Code Congress International, Inc. is the governing document for the original design of the above systems.

9.2.4.2 System Description

The Service Water System consist of two pumps, a hydropneumatic tank and associated piping and valves.

The service water supplied from the city of Fort Pierce is taken from two 500,000 gallon city water storage tanks. It is distributed throughout the plant without any additional water treatment. The system is pressurized with a hydropneumatic tank and a set of pumps which assure that minimum pressure is available to supply water.

The Service Water System receives potable water from the site Service Water System and, through a valved connection shown on Figure 9.2-7, supplies the potable water system in the Reactor Auxiliary Building. Potable water is provided to the health physics area toilet and locker rooms at elevation 19.50 ft and to the control room toilets and kitchen at elevation 62.00 ft and to other areas as shown on Figure 9.2-7.

Waste water from the sanitary system is discharged for processing and disposal.

9.2.4.3 System Evaluation

The systems serve no safety function since neither is required to achieve safe shutdown nor to mitigate the consequences of a design basis accident.

The Service and Potable Water System is not connected to any system which is a potential source of radioactive contamination.

Standpipes are provided within the City Water Storage Tanks for all non-fire related connections. These standpipes assure a minimum of 200,000 gallons of water is available to supply the fire suppression systems. See Appendix 9.5A.

9.2.5 ULTIMATE HEAT SINK

St. Lucie Units 1 and 2 utilize two independent water sources and a common discharge canal for the ultimate heat sink. The primary water source is the Atlantic Ocean, via the intake canal which is used as the source for all normal plant operational modes and accident situations. The secondary source of water is Big Mud Creek. The design of the above ultimate heat sink concept complies with the regulatory positions of Regulatory Guide 1.27, "Ultimate Heat Sink for Nuclear Power Plants," as discussed in Subsection 9.2.7 in the St. Lucie Unit 1 UFSAR.

This a common site facility for both St. Lucie Units 1 and 2, and previously NRC approved in the St. Lucie Unit 1 Operating License application (Docket No. 50-335).

9.2.6 CONDENSATE STORAGE TANK

The condensate storage tank (CST) (with its associated instrumentation) is a source of demineralized makeup for the secondary side during startup, full power operation and normal plant shutdown.

The CST also serves as a source of water inventory for the steam generators during a design basis accident to effect a safe shutdown condition. The CST is shown schematically on Figures 10.1-2a and 10.1-2b. Design data for the condensate storage tank is given in Table 9.2-11.

9.2.6.1 Design Bases

The CST is designed to:

a. Provide a dedicated source of feedwater for the Auxiliary Feedwater System

b. Provide deaerated makeup water for the condenser hotwell and serve as a return for excess hotwell water under normal operation

c. Withstand the effects of hurricane loadings, tornado, and probable maximum flood (PMF) without loss of function

d. Seismic Category I requirements in accordance with Regulatory Guide 1.29, (R2)

e. Quality Group C requirements in accordance with Regulatory Guide 1.26, (R3)

9.2.6.2 System Description

The CST is a 400,000 gallon tank which serves as a source of feedwater for the Auxiliary Feedwater System. A slight positive pressure is maintained within the tank by the use of a nitrogen blanket to prevent any accumulation of air. The tank also serves as a source of makeup water for the condenser hotwell and return for excess hotwell water under normal operations. The 400,000 gallons of the condensate storage water inventory are shared between St. Lucie Units 1 and 2 as follows:

a. 150,000 gallons are provided for St. Lucie Unit 2 in order to reduce the Reactor Coolant System temperature from hot standby conditions to the initiation of the Shutdown Cooling System.

b. 130,500 gallons are reserved for St. Lucie Unit 1 in the highly unlikely event of a vertical tornado missile impacting an the St. Lucie Unit 1 CST.

c. The remaining usable portions of the condensate storage volume is provided for the St. Lucie Unit 2 secondary system makeup during normal plant operations.

Subsection 10.4.9 provides the bases for the Auxiliary Feedwater System requirements. Figure 10.4-10 shows the condensate required for total auxiliary feedwater flow versus time to reduce the Reactor Coolant System temperature to a value which permits initiation of shutdown cooling. The CST is located west of the Turbine Building as shown on Figure 1.2-1.

The condensate storage tank has a nominal capacity of 400,000 gallons. 307,000 gallons (including dead volume) have been reserved to bring St. Lucie Units 1 and 2 to the shutdown cooling entry temperature. The remaining volume is utilized for normal secondary side plant operation. All nonseismic lines connected to the CST are located above the tank level reserved for plant cooldown. Therefore, the failure of the non-seismic lines does not result in the loss of the dedicated supply of condensate. The operator is notified that this minimum volume has been reached by the low water level alarm. Alarms are sounded in the control room on low and high water level. A low-low water level is alarmed in the control room to prevent damage to the auxiliary feedwater pumps should the condensate water level drop to minimum pump suction requirements.

Refer to Subsection 10.4.9 for further discussion of the Auxiliary Feedwater System.

9.2.6.3 Safety Evaluation

The CST is a passive component and therefore, no single active component failure could affect its operation. Any leakage from the CST would be detected in the control room and alarmed by the low water inventory level.

Redundant seismic Category I level instrumentation, with control room indication and alarm are provided to detect the CST level.

The St. Lucie Unit 2 CST provides 130,500 gallons of condensate for St. Lucie Unit 1 in the unlikely event the Unit 1 CST is disabled by a vertical missile. This arrangement does not affect the capability of the CST to provide the required feedwater inventory for St. Lucie Unit 2. The CST discharge line to St. Lucie Unit 1 is provided with locked closed valves which are designated seismic Category I and designed to the requirements of ASME Code, Section III, Code Class 3.

The CST is used during normal plant operation to collect the excess condenser hotwell water inventory. During this mode of operation, any radioactive material that has escaped from the primary side could conceivably be transported to the CST if no detection provision were available. However, radiation monitors are provided on both the Steam Generator Blowdown System and the Condenser Air Evacuation System such that any steam generator tube leakage is detected and isolated prior to transport to the CST. Additionally, in the unlikely event the CST water inventory were to become contaminated, and overflow, the CST is provided with a local high level alarm and is surrounded by the CST building such that overflow is identified and overflow and leakage are collected in the building. Therefore there are no environmental effects due to a leakage of the CST.

A N_2 cover gas is maintained over the demineralized water. Periodic grab samples are taken and analyzed to determine the amount of dissolved oxygen thereby minimizing any possibility of corrosion.

The CST is adequately designed against environmental effects. The tank is designed as seismic Category I, Quality Group C, and is enclosed by a concrete protective barrier in order to withstand any tornado and or missile effects.

9.2.6.4 Testing and Inspection

The CST is hydrostatically tested, cleaned and inspected prior to operation.

9.2.6.5 Instrumentation Application

Table 10.4-5 lists the function of the instrumentation provided on the condensate storage tank.

9.2.7 TURBINE COOLING WATER SYSTEM

The Turbine Cooling Water (TCW) System is shown schematically on Figures 9.2-9 and 9.2-10. System component design data are presented in Table 9.2-12.

The extended power uprate on the turbine cooling water system has been evaluated. The system has a design margin of at least 20 percent which makes it adequate for the increased

power level operation (3034 MWt). It should be mentioned that the existing system design criteria are based on a conservative Intake Cooling Water temperature of 90°F.

9.2.7.1 Design Bases

The TCW System is designed to provide a heat sink for turbine cycle equipment during normal operation and normal shutdown. The system serves no safety function since it is not required to achieve safe shutdown or to mitigate the consequences of a DBA.

9.2.7.2 System Description

The TCW System is a closed-loop system which uses demineralized water with a corrosion inhibitor to remove heat from the turbine and other components in the power cycle. The TCW System consists of two heat exchangers, two pumps, one surge tank, and associated piping, valves and instrumentation.

During normal operation, water is circulated by one running turbine cooling water pump and the heat removed is transferred to the intake cooling water system through the two turbine cooling water heat exchangers. The second turbine cooling water pump is normally operated in standby and will auto start on low flow. Both pumps can be operated if necessary based on overall heat removal demand and on intake cooling water system temperature.

Table 9.2-13 lists operating flow rates and calculated heat loads for turbine plant components cooled by the TCW System. The TCW System is supplied with makeup by the demineralized water pump. TCW circulates through the shell side of the heat exchangers.

A surge tank open to the atmosphere is connected to the TCW System. The tank level is automatically controlled (by level switches and a level control valve LCV-13-1) with makeup from the Demineralized Water System. Control room alarm is initiated on both high and low water level. The TCW chemistry is measured periodically and the inhibitor added when needed.

The turbine plant components cooled by the TCW System include:

a. Turbine lube oil coolers

b. Turbine electrohydraulic fluid coolers

c. Hydrogen seal oil unit coolers

d. Isolated phase bus air coolers

e. Hydrogen coolers

f. Exciter cooling air units

g. Heater drain pump seal coolers

h. Feedwater pump oil coolers

i. Condensate pump motor bearing coolers

j. Instrument air compressor intercoolers, aftercoolers and oil coolers EC283797

k. Sample coolers, secondary system

Components (a), (c), (e) and (f) listed above are provided with automatic temperature control valves in the cooler outlet piping. It is acceptable to operate the temperature control valve for component (e) in manual.

9.2.7.3 System Evaluation

The TCW System serves no safety function and is not needed to shut down the turbine generator and accessories after a turbine trip. A failure of any component does not affect the function of any safety related equipment.

9.2.7.4 Testing and Inspection

Prior to installation in the system, each component is inspected and cleaned.

Preoperational testing consists of calibrating the instruments, testing the automatic controls for actuation at the proper setpoints, checking the operability and limits of alarm functions, and setting the safety valves.

The TCW System is in service during normal plant operation. System performance is monitored and data taken periodically to confirm mechanical, hydraulic, and heat transfer characteristics.

9.2.7.5 Instrumentation Application

Table 9.2-14 lists the parameters measured to monitor the TCW System.

The TCW pumps can be started and stopped either locally or from the control room.

SECTION 9.2: REFERENCES

1. FPL letter from J. A. Stall to Mr. William A. Passetti, Department of Health, Bureau of Radiation Control, Radioactive Materials Section, dated 8/14/97.

2. Florida Department of Health letter from William Passetti to J. A. Stall, dated September 3, 1997.

3. Evaluation PSL-ENG-SEMS-02-043, “ICW Performance Curves”.

TABLE 9.2-1

DESIGN DATA FOR INTAKE COOLING WATER SYSTEM

1.	Intake Cooling Pumps	
	Type	Single-stage, vertical
	Quantity	3
	Capacity, each, gpm	14,500
	Head, ft.	130
	Design temperature, °F (of pumped fluid)	95 (max) - 40 (min) 90 calculational upper limit for adequate TCW cooling
	Material	
	Case	Aluminum Bronze, ASTM B-148***
	Impeller	Aluminum Bronze, ASTM B-148*
	Shaft	Monel**
	Motor	600 hp, 4000 V, 3-phase, 60 Hz 900 rpm, with 1.15 service factor
	Motor enclosure	WP II
	Codes	NEMA, Standards of the Hydraulic Institute, ASME Section III, Class 3, 1974 edition, addenda
2.	Discharge Piping	
	Material	
	14 in. and larger	3/8 in. wall carbon steel pipe with 1/8 in. cement lining or stainless steel for seismic Category I piping or cement lined cast-iron or ductile iron for non-seismic piping

* Austenitic stainless steel, ASTM A-351 may be used as an alternative in conjunction with 316 stainless steel case and impeller wear rings.

** Stainless steel may be used as an alternative to Monel.

*** ASME SA-351 Gr. CF3M may be used as an alternative.

TABLE 9.2-1 (Cont'd)

3 in. to 12 in.	Carbon steel pipe with 1/8 in. cement lining, cement lined ductile iron and cast iron pipe, aluminum bronze/monel/stainless steel
3/4" to 2-1/2 in.	Aluminum Bronze/Monel/carbon steel (internal coated)
1/2" and under	Aluminum Bronze/Monel/stainless steel (Type 316/Alloy UNS S31254)/Hastelloy/Titanium)
3. Connections	
Cement-lined steel	
2-1/2 in. and larger	Flanged/Welded
Cast Iron or Ductile Iron	
2 in. and smaller	Flanged/Welded
2-1/2 in. and larger	Flanged/Welded
Aluminum Bronze/Monel	
3 in. (Lube water)	Welded/Flanged
3/4" to 2 in.	Screwed/Flanged
Aluminum Bronze/Monel/Stainless Steel	(Type 316/Alloy UNS S31254)
1/2" and under	Screwed/Flanged/Welded/ Compression
Fiberglass-Reinforced Thermo-setting Resin	
4 in. and smaller	Flanged
System design pressure, psig	90
System design temperature, °F	125
4. Valves	
2 in. and smaller	Bronze - screwed or flanged
2-1/2 in. and larger	Carbon steel (flanged wafer) Cast iron (flanged, wafer) stainless steel
Code	ASME Section III, Class 3, 1971 Edition (Winter 1973 Addenda) and 1974 Edition (Summer 1975 Addenda), ANSI 16.5, MSS
5. Basket Strainers	
Quantity	6
Capacity (gpm)	16,500/12,500/1060

TABLE 9.2-1 (Cont'd)

Design Pressure, psig	150, 125, 125
Fluid temperature	40 F to 95 F
Perforation size, in.	0.2, 1/8, 1/4
Material:	
Body & cover	SA-515, GR 70, 316 SS
Baskets	316 SS, 317 SS
Code	ASME III, Class 3, 1995 Edition, through 1996 Addenda, ASME VIII

TABLE 9.2-2
FAILURE MODES & EFFECTS ANALYSIS - INTAKE COOLING WATER SYSTEM

Component Identification	Failure Mode	Effect on System	Method of Detection	Monitor	Remarks
Offsite power	Lost	ICW pumps trip and automatically restart on emergency diesel generator power.	Various loss of power alarms	CRI	Two ICW Pumps and headers are available to supply the required cooling water to the CCW HXs during accident conditions. One ICW train is sufficient to shutdown the unit.
ICW pump suction	Clogged	Loss of suction for one full capacity ICW pump. Operator must stop pump.	Pump header discharge low pressure alarm	CRI	Operator may start standby pump and realign header cross-connect valves (if necessary), to maintain desired flow. (2) One ICW train is sufficient to shutdown the unit.
ICW pump	Fails	Loss of one full capacity ICW pump.	Pump header discharge low pressure alarm & power failure alarm	CRI	Operator may start standby pump and realign header cross-connect valves (if necessary), to maintain desired flow. (2)
ICW pump discharge header	Leaks	Loss of one discharge header. Operator must isolate leaking header by realigning cross-connect valves (if necessary), and ICW pump(s) to maintain desired clow.	Pump discharge header low pressure alarm	CRI	One ICW pump and header is adequate to supply the required cooling water to one CCW HX during accident conditions.
Turbine cooling water HX isolation Valves MV-21-2&3	Valve fails to close upon SIAS	One ICW pump & header will service both one CCW HX & one TCW HX.	CCW HX tube side outlet flow & temperature indications	CRI	One ICW pump & header is adequate to supply the required cooling water to one CCW HX during accident conditions.

TABLE 9.2-2 (Cont'd)

Component Identification	Failure Mode	Effect on System	Method of Detection	Monitor	Remarks
Component cooling water HX	Inlet strainer clogged	Significant reduction of flow to CCW HX. Operator must stop ICW pump.	Strainer high differential pressure alarm & HX outlet low flow alarm	CRI	One ICW pump & header is adequate to supply the required cooling water to one CCW HX during accident conditions. Strainer bypass line or cross connect valves SB21190, SB21237 from alternate cooling water supply line may be opened downstream of strainer.
Air operated temperature control valves	Lose air supply	Fail open valve – no interruption of cooling water flow.	Temperature and flow (1) indications	CRI	Two ICW trains are available to supply the required cooing water to the CCW HXs.
Air operated debris discharge valves	Lose power / air supply	Fail Closed Valve – No diversion of ICW flow	Temperature and flow (1) indications	CRI	
HCV-21-7A HCV-21-7B	Fails to close	One component cooling HX has degraded performance	Temperature and flow (1) indications	CRI	One ICW pump and header is adequate to supply the required cooling water to one component cooling HX.
SS-21-1A SS-21-1B Strainer Control Panel	Lose power	Strainer and debris discharge valve lose power – Valve closes (No diversion of ICW flow), automatic strainer backwashing lost	Strainer high differential pressure alarm & HX outlet low flow alarm	CRI	Alternate dP alarm available. See remarks above for inlet strainer clogged.
CCW HX Temp Control Valves TCV-14-4A & B	One valve closes	One CCW HX lost	Temperature and flow (1) indications	CRI	One ICW pump & header is adequate to supply the required cooling water to one CCW HX during accident conditions.
Diesel generator sets	One fails to start	Loss of one ICW pump & header.	Various loss of power alarms	CRI	One ICW pump & header is required to supply the required cooling water to one CCW HX during accident conditions.

ICW - Intake cooling water
CRI - Control room indication
HX - Heat exchanger

SIAS - Safety injection actuation signal

CCW - Component cooling water

(1) - Local indication only
(2) - The ICW headers A and B are always isolated from each other. Failure of the A header cannot affect the B header, and failure of the B header cannot affect the A header.

TABLE 9.2-3
INTAKE COOLING WATER SYSTEM INSTRUMENTATION APPLICATION

System Parameter & Location	Indication Local	Indication Control Room	Alarm Local	Alarm Control Room	Tag Number	Instrument Range(4)	Normal Operating Range	Instrument Accuracy(4)
Intake Cooling Water								
Pump discharge pressure	*				PI-21-5A, -5B, -5C		50 psig	
Lubricating water strainer differential pressure				HI	PDIS-21-25-1A1, -1A2, -1B1, -1B2			
	*				PI-21-26A1, -26A2, -26B1, -26B2			
	*				PI-21-27A1, -27A2, -27B1, -27B2			
Pump discharge header pressure		*		LO	PIS-21-8A, -8B		50 psig	
Turbine Cooling Water HX Tube Side(2)								
Inlet strainer differential	*		HI	HI	PDIS-21-7A, -7B			
Inlet water pressure	*				PI-21-9A, -9B		30-40 psig	
Inlet water temperature	*				TI-21-9A, -9B		95°F	
Outlet water pressure	*				PI-21-10A, -10B		17.5-27.5 psig	

TABLE 9.2-3 (Cont'd)
INTAKE COOLING WATER SYSTEM INSTRUMENTATION APPLICATION

System Parameter & Location	Indication Local	Indication Control Room	Alarm Local	Alarm Control Room	Tag Number	Instrument Range(4)	Normal Operating Range	Instrument Accuracy(4)
Outlet water temperature	*				TI-21-10A, -10B		107.5°F	
		*			TR-21-3(1)		107.5°F	
Outlet water flow	*				FI-21-8A, -8B		6250 gpm	
Component Cooling Water HX Tube Side(3)								
Inlet strainer differential pressure	*		HI	HI	PDIS-21-6A, -6B		2 psi	
Inlet water pressure	*				PI-21-23A, -23B		25-30 psig	
Inlet water temperature	*				TI-21-12A, -12B		95°F (max)	
Outlet water pressure	*				PI-21-24A, -24B		13.5-18.5 psig	
Outlet water temperature	*				TI-21-13A, -13B		130°F (max)	
		*			TR-21-3(1)			
Outlet water flow	*			LO	FIS-21-9A, -9B		8250-16,500 gpm	

(1) All recordings are in the control room unless otherwise indicated.

(2) Turbine cooling water HX shell side instrumentation is included in Table 9.2-14.

(3) Component cooling water HX shell side instrumentation is included in Table 9.2-7.

(4) Instrument ranges are selected in accordance with standard engineering practices. Instrument accuracies are selected such that existing instrument loop performance and safety analysis assumptions remain valid. Where applicable, instrument accuracies are also evaluated for their impact on setpoints in accordance with the FPL Setpoint Methodology.

TABLE 9.2-4

DESIGN DATA FOR COMPONENT COOLING SYSTEM COMPONENTS

1. Component Cooling Water Pumps

Type	Centrifugal, horizontal-split, double-suction pumps
Quantity	3
Capacity, each, gpm	8500
Head, feet	177
Design pressure, psig	150
Design temperature, F	185
Material	
Case	ASTM A-216 GR WCB steel
Impeller	ASTM A-216 GR WCB steel
Shaft	SAE 4140 Low Alloy steel
Motor	450 hp, 4000 V, 60 Hz, 3-phase, 1800 rpm, with 1.15 service factor
Enclosure	WP II
Codes	Motor: NEMA, Pump: Standards of the Hydraulic Institute; ASME Code, 1971 edition, Winter 1973 Addenda, Section III, Class 3

2. Component Cooling Water Heat Exchangers

Type	Horizontal, counterflow, straight tubes rolled into fixed tube sheets		
Quantity	2		
Flow, lb/hr		(CCW) Shell side	(Sea Water) Tube side
	Normal	5.32×10^6	8.50×10^6
	Accident	3.72×10^6	7.47×10^6
	Shutdown	7.12×10^6	8.50×10^6
	Refueling	6.47×10^6	7.47×10^6

TABLE 9.2-4 (Cont'd)

Design duty, each, Btu/hr	65.0×10^6 (normal) 175.0×10^6(shutdown) 240.0×10^6(accident conditions)** 60.0×10^6(refueling)
Heat transfer area, each, ft^2	18,250
Design pressure, psig	Shell side: 150; Tube side: 90
Design temperature, °F	Shell side: 185; Tube side: 150
Material	
Shell	Carbon steel ASTM A 515, GR 70
Tubes	Aluminum Brass, ASTM B-111, Alloy CDA-687
Tube Sheets	Aluminum Bronze ASTM B-171 Type D
Codes	ASME Section III Class 3, 1971 Edition, Summer 1973 Addenda, HEI, TEMA
3. <u>Surge Tanks</u>	
Type	Horizontal
Quantity	1
Design pressure, psig	100
Design temperature,°F	150
Volume, gallons	2000
Material	ASTM A-283 GR C steel
Code	ASME Section III, Class 3, 1974 Edition
4. <u>Chemical Feed Tank</u>	
Type	Vertical
Quantity	1
Design pressure, psig	150
Design temperature, °F	450

** Note that these are original procurement values. See Ref. 27 in Section 6.2 for the accident loads.

TABLE 9.2-4 (Cont'd)

Volume, gallons	50
Material	Carbon Steel SA-285-C
Code	ASME Section VIII
5. <u>Piping, Fittings and Valves</u>	
Piping material	Carbon steel, ASME SA-106 GR B Seamless
Design pressure, psig	150
Design temperature, F	200
Construction:	
2-1/2 in. and larger	Butt welded except at flanged connections
2 in. and smaller	Socket welded or screwed except at flanged connections
Code	ANSI B31.1, ASME III, Class 3, 1971 Edition, Summer 1973 Addenda
Valves:	
2-1/2 in. and larger	
Gate, globe and ball	Carbon steel, stainless steel, butt weld and flanged ends ANSI 150 and 400 lbs rating
Check and butterfly	Carbon steel, stainless steel and cast iron, flanged and/or wafer. ANSI 150 lbs and 125 lbs rating
2 in. and smaller	Carbon steel and stainless steel, socket weld ends, ANSI 600 and 1500 lbs rating
Codes	ASME Section III Class 2 and 3, 1971 Edition, (Winter 1973 Addenda) and 1974 Edition, (Summer 1975 Addenda); ANSI B16.5, Manufacturer's Stds.

TABLE 9.2-5

DESIGN FLOW RATES AND HEAT LOADS
FOR ALL AUXILIARY EQUIPMENT COOLED
BY THE COMPONENT COOLING SYSTEM

EQUIPMENT (No. Units)	ACCIDENT		Total	NORMAL OPERATION			HOT SHUTDOWN			REFUELING		
	No. Operat.	Duty/Train (10^6 BTU/Hr)	Flow GPM	No. Oper.	Total Duty (10^6 BTU/Hr)	Total Flow GPM	No. Oper.	Total Duty (10^6 BTU/Hr)	Total Flow GPM	No. Oper.	Total Duty (10^6 BTU/Hr)	Total Flow GPM
1. Fuel Pool Hx (2)	0	-	-	1	14	3,200-3,650	1	14	3,200-3,650	1	39.65(3)	3,200-3,560
2. Shutdown Hx (2)	1	57.05	5,096	-	-	-	2	178.42(2)	7,438	2	57.64(2)	7,438
3. Letdown Hx (1)	0	-	-	1	3.0-21.2	190-1200	1	3.0(1)	190(1)	0	-	-
4. Sample Hx (4)	0	-	-	4	1.56	40	2	1.04	40	2	1.04	40
5. HPSI Pumps (2)	1	0.03	41	0	-	76-84	0	-	76-84	0	-	76-84
6. Containment Spray Pumps (2)	1	0.01	10	0	-	12-20	0	-	12-20	0	-	12-20
7. RCP Motors (4)	0	-	-	4	6.42	848-1000	2	3.21(1)	848-1000(1)	0	-	-
8. CEDM (3)	0	-	-	3	4.4	550-600	0	-	550-6000	0	-	-
9. Waste Concen. (5)	0	-	-	0	-	-	0	-	-	0	-	-
10. B.A. Concen. (5)	0	-	-	0	-	-	0	-	-	0	-	-
11. Waste Gas Comp. (2)	0	-	-	1	-	2	1	-	2	1	-	2
12. Blowdown Rad. Monit.(2)	0	-	-	1	-	10	0	-	10	0	-	10
13. Cont. Coolers (4)	2	129.65	3,036	4	3.0	5,400-5,800	4	3.0	5,000-5,800	4	(6)	(6)
14. Control Room A/C (3)	2	1.28	200	3	1.92(4)	300(4)	3	1.92(4)	300(4)	3	1.92(4)	300(4)

NOTES:

(1) During shutdown the letdown Hx and RC Pump Motor Loads are not concurrent with other loads.

(2) The maximum heat load for shutdown cooling Hx is 130 x 10^6 BTU/HR which reduces gradually to 29 x 10^6 BTU/HR.

(3) Heat load to the fuel pool heat exchangers may be as great as 35.7 x 10^6 BTU/HR following a full core offload. In this case, the concurrent shutdown cooling heat load would be correspondingly reduced.

(4) Conservatively based on all three A/C units operating.

(5) Components are no longer used.

(6) Cooling water is supplied to the CFCs via a temporary chilled water system during refueling and CCW flow to the CFCs is isolated.

TABLE 9.2-6

FAILURE MODES AND EFFECTS ANALYSIS - COMPONENT COOLING WATER SYSTEM

Component Identification	Failure Mode	Effect on System	Method of Detection	Monitor	Remarks
Offsite power	Lost	CCW pumps trip and automatically restart on emergency diesel generator power.	Various loss of power alarms	CRI	Two CCW pumps & two CCW HXs are available to cool Reactor Coolant System & auxiliary systems. One CCW train is sufficient to shutdown the unit.
CCW pump suction line	Valve SB14129, SB14133 or SB14137 inadvertently closed	Loss of suction for one CCW pump. Operator must stop pump.	CCW header low flow alarm and/or CCW header low pressure alarm	CRI	Operator may start stand-by pump & realign header cross connect valves MV-14-1, 2, 3 or 4 (if necessary) to maintain desired flow. One CCW train is sufficient to shutdown the unit.
CCW Pump	Fails	Loss of one full capacity CCW pump.	CCW header low flow alarm and/or CCW header low pressure alarm	CRI	Operator may start stand- by pump & realign header cross connect valves MV-14-1, 2, 3 or 4 (if necessary) to maintain desired flow.
CCW HX outlet line	Valve SB14144, SB14148 or SB14152 Inadvertently closed	Loss of one essential supply header system.	CCW HX outlet low pressure & low flow alarms	CRI	Two CCW pumps & one CCW HX are adequate to cool Reactor Coolant System & auxiliary systems during normal operation. Operator may realign cross connect valves MV-14-1 or 2 with two CCW pumps to maintain desired flow.
Essential headers A & B	Leakage	Loss of one essential CCW supply system	Various loss of flow & low pressure alarms	CRI	One CCW pump & one CCW HX are adequate to cool Reactor Coolant System & auxiliary systems in an emergency. N-header valves automatically close on low surge tank level effectively isolating the leaking header from at least one essential header.
N-header main isolation valve (pneumatic) HCV-14-8A/B HCV-14-9/10	(1) Loses air supply	Fail closed valves – flow discontinued through nonessential supply header N. Essential supply headers A & B isolated from each other.	Valve position indicating lights	CRI	Safety related equipment cooling requirements are available from two redundant & independent supply systems A & B.

TABLE 9.2-6 (Cont'd)

FAILURE MODES AND EFFECTS ANALYSIS - COMPONENT COOLING WATER SYSTEM

Component Identification	Failure Mode	Effect on System	Method of Detection	Monitor	Remarks
	(2) One train fails to close on SIAS	Reduced CCW flow through one train	Valve position and flow indicators	CRI	One CCW train is adequate to cool Reactor Coolant System & auxiliary systems during an emergency.
N-header	Leakage	Loss of N-header	Low CCW surge tank water level	CRI	N-header automatically isolated from essential headers on low surge tank water level. Two CCW trains are available to cool RCS & auxiliary systems.
Fuel pool cooling isolation valve (MV-14-17,18)	Fails to close on SIAS	Reduced CCW flow through one train	Valve position and flow indicators	CRI	One CCW train is adequate to cool RCS & auxiliary systems during emergency.
RCP isolation valves (HCV-14-1, 2, 6, 7)	Fails to close on SIAS	None	Alarm in control room and valve position indicating lights	CRI	Neutral header automatically isolated. Two CCW trains are available to cool RCS & auxiliary systems.
Shutdown heat exchanger isolation valve (HCV-14-3A or HCV-14-3B)	Fails to open on SIAS	Loss of flow to shutdown heat exchangers	Valve position and flow indicators	CRI	One CCW train is adequate to cool RCS & auxiliary systems during emergency.
CCW surge tank level transmitter LS-14-6A, 6B	Fails Low	N-header isolation valve closes	Valve position indicating lights	CRI	Two CCW trains are available to cool RCS & auxiliary systems.

TABLE 9.2-7

COMPONENT COOLING WATER SYSTEM INSTRUMENTATION APPLICATION

System Parameter and Location	Indication Local	Indication Control Room	Alarm Local	Alarm Control Room	(1) Recording	Tag Number/or Control Function	Instrument[4] Range	Normal Operating Range	Instrument[4] Accuracy
CCW HX Shell Side[2]									
Inlet Temperature	X					TI-14-2A; -2B		110°F	
Outlet Temperature	X			HI	TR-25-1A;1B	TIC-14-4A; -4B Modulates temperature controlled valve on tube side of HX discharge.		100°F	
Outlet Pressure		*		LO		PIS-14-8A; -8B		80 psig	
Outlet Pressure	X					PI-14-7A; -7B		80 psig	
Outlet Flow		*		LO/HI		FIS-14-1A; -1B		5600 gpm 11200 gpm	
Outlet Radiation		*		HI	RR-26-1,-2	RIS-26-1; -2 Closes CCW surge tank vent valve and diverts the vapors to WM System			
Shutdown HX Shell Side[3]									
Outlet Temperature	X					TI-14-27A; 27B		150°F	
Outlet Temperature		*			TR-09-5A	TE-14-18A&B			
Outlet Flow		*		LO/HI		FIS-14-10A;-10B		4820 gpm	
Fuel Pool HX									
Outlet Temperature		*			TR-09-5A	TE-14-20		100-150°F	
utlet Temperature	X					TI-14-26		110-120°F	
Outlet Flow		*		LO/HI		FIS-14-2		1600-3560 gpm	
Outlet Flow	X					FIS-14-2-1		1600-3560 gpm	
Containment Cooling Unit									
Outlet Temperature		*			TR-09-5A	TE-14-13A TE-14-13B;-13C,-13D		102°F	
Outlet Flow	X			LO		FIS-14-12A;-12B; -12C;-12D		1200 gpm	
CEDM Air Cooler									
Outlet Temperature		*			TR-09-5A	TE-14-23		115°F	
Outlet Flow	X			LO		FIS-14-13		520 gpm	

TABLE 9.2-7 (Cont'd)

System Parameter & Location	Indication Local	Indication Control Room	Alarm Local	Alarm Control Room	(1) Recording	Tag Number/or Control Function	Instrument[4] Range	Normal Operating Range	Instrument Accuracy[4]
RCP & Motor Cooling Water Outlet Flow		*		LO		FIA-1158;1168, 1178, 1188 FIS-14-15A;-15B		212 gpm	
Total Combined Flow		*		LO		15C;15D		1368 gpm	
Temperature Seal Cooler HX Outlet Temperature	X	*		HI		TI-1153;-1163;-1173, 1183 TIS-14-32A1;-32A2 32B1;-32B2 Interconnected with valves; HCV-14-11A1, A2, B1 & B2		200°F	
CCW Surge Tank Level	X			LO HI		LG-14-2A;-2B LS-14-3, 4, control make-up flow into tanks via LCV-14-1 LS-14-1A,-1B LS-14-5 LS-14-6A,-6B Isolates N-header on low surge tank by closing HCV-14-8A,-8B,-9,-10		36-48 in	
Integrated Make-Up (gal)	X					FQ-14-14		-	
HPSI Pump Cooling Water									
Outlet Temperature	X					TI-14-14A;-14B;		100°F	
Outlet Flow	X					FG-14-7A;-7B		35 gpm	-
Boric Acid Concentrator [5]									
Outlet Temperature	X					TI-14-7A;-7B		115°F	
Outlet Flow	X					FI-14-3A;-3B		710 gpm	
Waste Concentrator [5] Cooling Water									
Outlet Temperature	X					TI-14-8		115°F	
Outlet Flow	X					FI-14-4		710 gpm	
Waste Gas Compressors Cooling Water									
Outlet Temperature	X					TI-14-9A;-9B		100°F	
Outlet Flow	X					FG-14-5A;-5B		2 GPM	
CCW Pump Discharge Pressure	X					PI-14-1A;-1B;-1C		100 psig	

TABLE 9.2-7 (Cont'd)

System Parameter and Location	Indication Local	Indication Control Room	Alarm Local	Alarm Control Room	(1) Recording	Tag Number/or Control Function	Instrument[4] Range	Normal Operating Range	Instrument[4] Accuracy
Letdown HX									
Outlet Temperature		*			TR-09-5A;	TE-14-12		130ºF	
Outlet Flow		*		HI		FIS-14-6		190-1200 gpm	
Inlet Temperature		*			TR-09-5A	TE-14-10		65-90	

(1) All recordings are in the control room unless otherwise indicated.

(2) Component Cooling Water HX tube side instrumentation is contained in Subsection 9.2.1.

(3) Shutdown HX tube side instrumentation is contained in Subsection 5.4.7.

(4) Instrument ranges are selected in accordance with standard engineering practices. Instrument accuracies are selected such that existing instrument loop performance and safety analysis assumptions remain valid. Where applicable, instrument accuracies are also evaluated for their impact on setpoints in accordance with the FPL Setpoint Methodology.

(5) The boric acid and waste concentrators are no longer used.

TABLE 9.2-8

DESIGN DATA FOR PRIMARY MAKEUP WATER SYSTEM COMPONENTS

1. Primary Water Storage Tank

Quantity	1
Capacity, Gallons	150,000
Design temperature, °F	125
Design pressure, psig	Atmospheric
Material	Carbon Steel

2. Primary Water Pumps

Quantity	2
Capacity, gpm	325
Type	Horiz. Centrifugal
Head, ft	250
Motor, hp	40 or 50
Material:	
Casing	316 SS
Shaft	SAE 4140
Impeller	316SS
Codes:	NEMA IV Hydraulic Institute, ASME VIII

TABLE 9.2-9

PRIMARY MAKEUP WATER SYSTEM INSTRUMENTATION APPLICATION

System Parameter & Location	Indication Local	Indication Control Room	Alarm Local	Alarm Control Room	Tag Number/or Control Function	Instrument[2] Range	Normal Operating Range	Instrument[2] Range
Primary Water Tank Water Level[1]					Control operation of valve at inlet to primary water tank			
					Stops operation of waste condensate pumps and boric acid condensate pumps on high primary water tank level			
	*		LO/HI		LS-15-5, LIT-15-5		1-21 ft	
		*		LO/HI	LIS-15-9		1-21 ft	
Primary Water Pump Discharge header pressure				LO	Start standby primary water pump on low pressure (PS-15-7)			
	*				PI-15-6A,-6B		110 psig	

(1) All alarms are in the control room unless otherwise indicated.

(2) Instrument ranges are selected in accordance with standard engineering practices. Instrument accuracies are selected such that existing instrument loop performance and safety analysis assumptions remain valid. Where applicable, instrument accuracies are also evaluated for their impact on setpoints in accordance with the FPL Setpoint Methodology.

TABLE 9.2-10

DESIGN DATA FOR SERVICE WATER SYSTEM COMPONENTS

(Deleted)

TABLE 9.2-11

DESIGN DATA FOR CONDENSATE STORAGE TANK

Capacity, gallons	400,000
Operating pressure	1 psig
Operating temperature, F	30-120
Design pressure	2 psig
Design temperature, F	120
Material	Carbon Steel Coated
Seismic design	Category I
Code	ASME, Section III, Class 3, 1977 Edition

TABLE 9.2-12

DESIGN DATA FOR TURBINE COOLING WATER SYSTEM COMPONENTS

1.	Turbine Cooling Water Heat Exchangers	
	Type	Horizontal, straight tube, single pass
	Quantity	2
	Design duty, each Btu/hr	37.5×10^6
	Heat transfer area, each ft^2	16067.9 Gross; 15922.2 Effective
	Design pressure, psig	150 shell side, 90 tube side
	Design temperature, F	150 shell side, 150 tube side
	Material	
	Shell	ASME SA-516 Gr. 70
	Tubes	ASME SB-676 AL6XN (Stainless Steel)
	Tube Sheet	ASME SA-516 Gr. 70 (AL6XN Clad)
	Codes	TEMA, Class B ASME Section VIII
2.	Turbine Cooling Water Pumps	
	Type	Horizontal, centrifugal
	Quantity	2
	Capacity, each, gpm	5100
	Head, feet	152
	Material:	
	Case	Cast iron A-48 Class 25
	Impeller	Bronze ASTM B-145 Alloy 4A
	Shaft	Steel ASTM A-107 Grade 1040
	Motor	250 hp, 4000 V, 3-phase, 60 Hz, 1200 rpm with a 1.15 service factor
	Enclosure	WP-II
	Codes	NEMA, Standards of Hydraulic Institute, ASME VIII

TABLE 9.2-12 (Cont'd)

3. Turbine Cooling Water Surge Tank

Type	Horizontal
Quantity	1
Design pressure	Atmospheric
Design temperature, F	125
Volume, gallons	1000
Material	ASTM A-283 GR C
Code	ASME Section VIII

TABLE 9.2-13

TURBINE PLANT COMPONENTS OPERATING FLOW RATES AND CALCULATED HEAT LOADS

Component Description	Flow/Unit (gpm)	Heat Load/Unit (Btu/hr x 10^6)
Turbine lube oil coolers	2900	8.45
Turbine E-H fluid coolers	40	Negligible
Hydrogen seal oil unit coolers		
Hydrogen side	100	0.32
Air side	260	1.01
Isolated phase bus air coolers	150	1.49
Hydrogen coolers (Total for quantity of 4)	4500	58.2
Exciter air cooler units	200	1.09
Heater drain pump seal coolers	13	Negligible
Feedwater pump oil coolers	20	Negligible
Condensate pumps motor bearing coolers	12	Negligible
Instrument air compressors (2A, 2B, 2C & 2D)	58	0.78
Sample cooler, secondary system	15	Negligible

EC283797

TABLE 9.2-14

TURBINE COOLING WATER SYSTEM INSTRUMENTATION APPLICATIONS

System Parameter & Location	Indication Local	Indication Control Room	Alarm Local	Alarm Control Room	Recording[1]	Tag Number/or Control Function	Instrument[3] Range	Normal Operating Range	Instrument[3] Accuracy
Turbine Cooling Water Pump									
1) Suction pressure	X				.	PI-13-1A;-1B		10-27 psig	
2) Outlet pressure	X					PI-13-2A;-2B		70-80 psig	
Turbine Cooling Water HX									
Shellside[2]									
1) Outlet temperature	X					TI-13-3A;-3B		90-110 F	
		*		Hi	TR-09-5B	TE-13-9A; 9B, TS-13-45A; 45B; TIC-13-2A;-2B Controls intake cooling water flow through tube side of HX by means of temperature control valves TCV-13-2A; -2B		90-110 F 99°F	
2) TCW/Shell Flow Element/Transfer	X					FE-13-50A / FIT-13-50A, FE-13-50B / FIT-13-50B	0-7000 gpm	4250 gpm	
Turbine Electro-Hydraulic Fluid Coolers									
1) Outlet flow	X					FG-13-6A;-6B		40 gpm	-
2) Outlet temperature	X					TI-13-23A;-23B		100 F	
Turbine Lube Oil Coolers									
1) Outlet temperature	X					TI-13-26A;-26B		110 F	
2) Inlet header flow	X					FI-13-7		2900 gpm	
Hydrogen Seal Oil Unit Coolers									
1) Air side cooler									
a) Inlet flow	X					FI-13-5		260 gpm	
b) Outlet temperature	X					TI-13-19		≤110°F	

TABLE 9.2-14 (Cont'd)

System Parameter & Location	Indication Local	Indication Control Room	Alarm Local	Alarm Control Room	Recording[1]	Tag Number/or Control Function	Instrument[3] Range	Normal Operating Range	Instrument[3] Accuracy
Hydrogen Seal Oil Unit Coolers (Cont'd)									
2) Hydrogen side cooler									
a) Inlet flow	X					FI-13-4		100 gpm	
b) Outlet temperature	X					TI-13-20		≤106°F	
Hydrogen Coolers									
1) Inlet header flow	X					FI-13-3		4500 gpm	
2) Outlet temperature	X					TI-13-13A; 13B; 13C; 13D		80-125°F	
Exciter Cooler Air Units									
1) Inlet header flow	X					FI-13-1		200gpm	
2) Inlet header pressure	X					PI-13-5		80 psig	
3) Outboard exciter cooler outlet temperature	X					TI-13-6A; -6B		115.1°F	
4) Inboard exciter cooler outlet temperature	X					TI-13-7A; -7B		115.1°F	
Isolated Phase Bus Air Coolers									
1) Inlet header flow	X					FI-13-2		150 (300 gpm for both coolers)	
2) Outlet temperature	X					TI-13-11A; 11B		118.8°F	
3) Outlet flow from each cooler	X	X	LO	LO		FE-53-1A; 1B		150gpm	
Instrument Air Compressors									
1) Intercooler, Oilcooler, and Aftercooler									
a) Outlet temperature	X		HI			TT-12-1; 2		124-143°F	
b) Outlet flow	X					FG-13-12A;-12B; -11C; -11D		10-58 gpm	

EC283797

TABLE 9.2-14 (Cont'd)

System Parameter & Location	Indication Local	Indication Control Room	Alarm Local	Alarm Control Room	Recording[1]	Tag Number/or Control Function	Instrument[3] Range	Normal Operating Range	Instrument[3] Accuracy
Condensate Pump MotorCooling									
1) Motor Bearing Cooler outlet									
a) Temperature	X					TI-13-31A; 31B; 31C		110°F	
b) Flow	X		LO			FIS-13-21A; 21B; 21C		12 gpm	--
Feedwater Pumps Oil Coolers									
1) Outlet flow	X					FG-13-8A; 8B		20 gpm	--
2) Outlet temperature	X					TI-13-29A; 29B		110°F	
Heater Drain Pumps									
1) Seal cooler outlet									
a) Temperature	X					TI-13-38A; 38B		125°F	
b) Flow	X					FG-13-18A; 18B		6.5 gpm (per cooler)	--

TABLE 9.2-14 (Cont'd)

System Parameter & Location	Indication Local	Indication Control Room	Alarm Local	Alarm Control Room	Recording[1]	Tag Number/or Control Function	Instrument[3] Range	Normal Operating Range	Instrument[3] Accuracy
Turbine Cooling Water SurgeTank									
1) Level	X			LO/HI		LG-13-3; LS-13-1; -2; LS-13-4; -5 Regulate flow to tank from demineralized water pump by means of level control valve LCV-13-1		Centerline of tank	--
2) Integrated Makeup (gal)	X					FQ-13-20		--	

(1) All recordings are in the control room unless otherwise indicated.

(2) Turbine cooling HX tube side instrumentation is contained in Subsection 9.2.1.

(3) Instrument ranges are selected in accordance with standard engineering practices. Instrument accuracies are selected such that existing instrument loop performance and safety analysis assumptions remain valid. Where applicable, instrument accuracies are also evaluated for their impact on setpoints in accordance with the FPL Setpoint Methodology.

Refer to Drawings
2998-G-082, Sh. 1 & 2

FLORIDA POWER & LIGHT COMPANY
ST. LUCIE PLANT UNIT 2

FLOW DIAGRAM
CIRCULATING AND INTAKE
COOLING WATER SYSTEM

FIGURE 9.2-1

Refer to Drawing
2998-G-083, Sh. 1 & 2

FLORIDA POWER & LIGHT COMPANY
ST. LUCIE PLANT UNIT 2

FLOW DIAGRAM
COMPONENT COOLING
SYSTEM

FIGURE 9.2-2

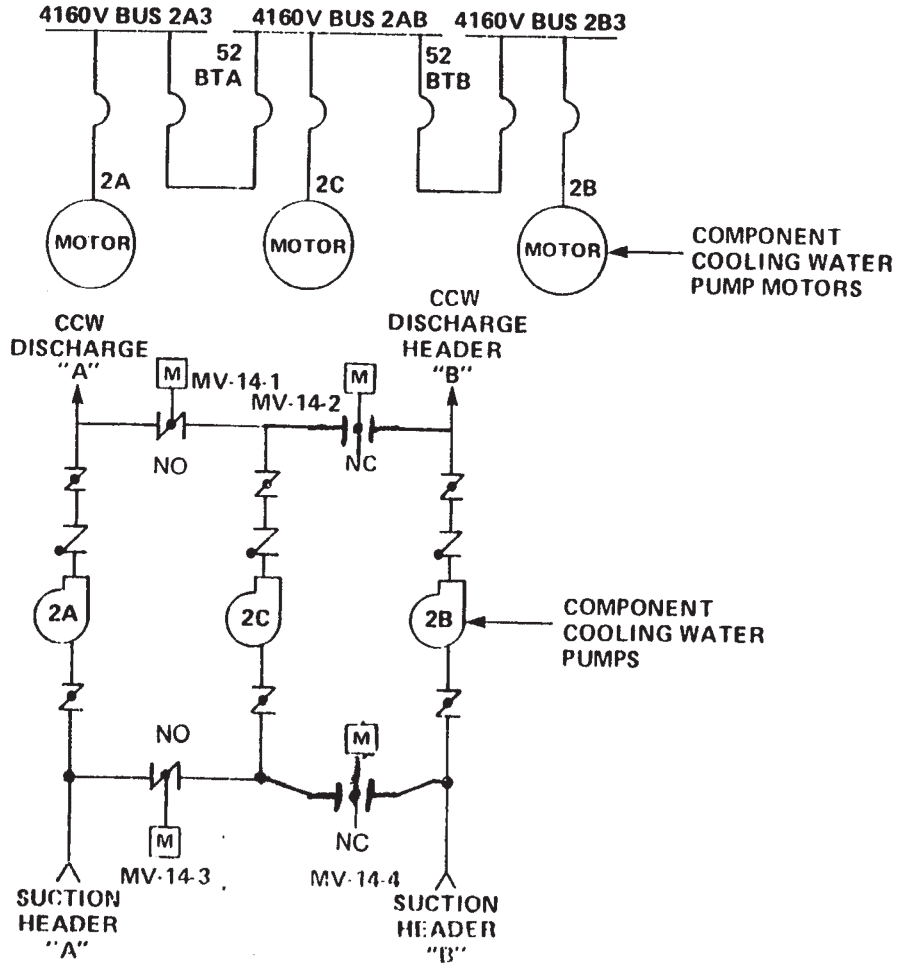

*VALVE LIMIT SWITCH OPEN ONLY WHEN VALVE IS FULLY CLOSED.

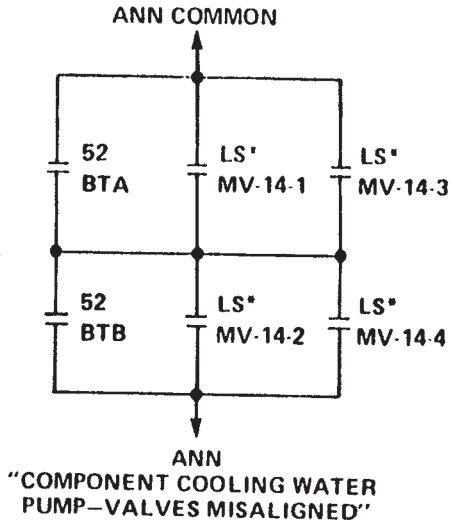

Amendment No. 13 (05/00)

FLORIDA POWER & LIGHT COMPANY
ST. LUCIE PLANT UNIT 2

COMPONENT COOLING WATER PUMP 2C PUMP-VALVE ALIGNMENT ANNUNCIATION
FIGURE 9.2-3

Refer to Drawing
2998-G-084, Sh. 1 & 2

FLORIDA POWER & LIGHT COMPANY
ST. LUCIE PLANT UNIT 2

FLOW DIAGRAM DOMESTIC &
MAKE-UP WATER SYSTEMS

FIGURE 9.2-4

DELETED

FLORIDA POWER & LIGHT COMPANY
ST. LUCIE PLANT UNIT 2

FIGURE 9.2-5

DELETED

FLORIDA POWER & LIGHT COMPANY
ST. LUCIE PLANT UNIT 2

FIGURE 9.2-6

Refer to Drawings
2998-G-087, Sh. 1 & 2

FLORIDA POWER & LIGHT COMPANY
ST. LUCIE PLANT UNIT 2

FLOW DIAGRAM
MISCELLANEOUS
SYSTEMS

FIGURE 9.2-7

Refer to Dwg.
2998-G-089, SH 1A, 1B

Amendment No. 11 (5/97)

FLORIDA POWER & LIGHT COMPANY
ST. LUCIE PLANT UNIT 2

FLOW DIAGRAM
TURBINE COOLING WATER SYSTEM
FIGURE 9.2-9

Refer to Dwg.
2998-G-089, SH. 2

FLORIDA POWER & LIGHT COMPANY
ST. LUCIE PLANT UNIT 2

FLOW DIAGRAM
TURBINE COOLING WATER SYSTEM
FIGURE 9.2-10

9.3 PROCESS AUXILIARIES

9.3.1 COMPRESSED AIR SYSTEMS

The compressed air systems consists of the Instrument Air and Station Air Systems. The Instrument Air System provides a reliable supply of dry, oil-free air for pneumatic instruments and controls and pneumatically operated valves, and the Station Air System provides the necessary station air for normal plant operation and maintenance. The systems serve no safety function since they are not required to achieve safe shutdown or to mitigate the consequences of a LOCA.

Equipment design parameters are given in Table 9.3-1 and the Compressed Air Systems are shown schematically on Figures 9.3-1, 9.3-2 and 9.3-2a.

9.3.1.1 Design Bases

The design basis of the Instrument Air System is to provide a reliable supply of clean, oil-free air at the required pressure for pneumatically operated instruments and control. The systems serves no safety function since it is not required to mitigate the consequences of a LOCA or required for safe shutdown. The system design is such that there is sufficient capacity to meet the needs of all instrument air components inside and outside containment by providing up to 400 SCFM of clean, oil free air. The Instrument Air System utilizes oil free compressors, air dryers and air filters located at each dryer to provide air at the exit of the afterfilter which is capable of meeting the requirements of ISO 8573 Class 0, for particulate and oil, and Class 1 for dewpoint. EC283797

The design basis for the service air system is to provide clean, oil free air to power the operation of pneumatic tools and equipment used for plant maintenance. The system is capable of producing 500 SCFM of air for the anticipated maintenance requirements.

9.3.1.2 System Description

The Instrument Air System utilizes four compressors, each having a separate inlet filter, aftercooler and moisture separator. The compressors are cooled by the Turbine Cooling Water (TCW) System (see Subsection 9.2.7). The instrument air compressors discharge to a header connected to an air receiver, air dryer and filter assembly. The compressed air header is divided into branch lines supplying the Steam Generator Blowdown Treatment Facility, intake structure, containment, component cooling water area, Turbine Building, tank storage areas, Fuel Handling Building, Diesel Generator Building, Reactor Auxiliary Building and other structures, systems and/or components as shown on Figure 9.3-2. The various air-operated valves and pneumatic instruments and controls are supplied from the header.

The four instrument air compressors are in two sets: 2A, 2B and 2C, 2D. The 2C and 2D air compressors function as the principle source of instrument air and are each capable of meeting the full requirement of the plant instrument air usage. EC283797

The second set of air compressors (2A and 2B) which are not full capacity units are normally placed in off, available for use under abnormal operating conditions, (e.g. whenever air compressors are required with only vital power available to meet the instrument air demand during an offsite loss of power event). The 2A and 2B compressors will maintain the instrument

air receiver pressure within the system requirement. The system utilizes two 100% capacity desicant air dryer packages each with 2 desicant towers and 1 afterfilter. One air dryer is in continuous operation while the other is in standby.

Compressors 2C & 2D are operated from the digital Master Control Panel. High and low pressure setpoints are configured in the Master Control Panel. The Master Control Panel receives system pressure from a pressure transmitter mounted on the receiver and uses control algorithms to load and unload compressors 2C & 2D as necessary in order to maintain system pressure between these setpoints. When loaded, system pressure will increase provided the compressor output exceeds system demand. Pressure will continue to increase until the high operating setpoint is reached at which time the compressor will unload (i.e., all inlet valves will be held open), operating but compressing no air. The compressors motors are automatically started and stopped as needed. Compressors 2C & 2D can also be operated locally based on pressure instrumentation in the compressor skid. In the event that the Master Control Panel is unavailable, compressors 2C & 2D will operate under local settings (i.e. lead / lag) and load and unload based on skid mounted instrumentation. EC283797

Compressors 2A & 2B are each equipped with a three position selector switch with “ON”, “AUTO” and “OFF” positions. When a compressor's selector switch is “ON”, the compressor will load and unload based on the configurable setpoints associated with this selector switch position and will function as the lead compressor. When a compressor's selector switch is in “AUTO”, the compressor will load and unload based on the lower setpoints associated with this selector switch position and will function as the lag compressor. In both positions, the controller automatically starts and stops the motor as needed.

The Station Air System consists of an air receiver and distribution piping supplied by construction air or portable compressors. The compressors are cooled by the TCW System (see Subsection 9.2.7). The receiver outlet header is divided into branch lines supplying station air to the containment, Steam Generator Blowdown Treatment Facility; intake structure, Fuel Handling Building, Reactor Auxiliary Building, Turbine Building, Component Cooling Water Building, Diesel Generator Building and tank storage areas and other structures, systems and/or components as shown on Figure 9.2-1. Station air is used for the operation of pneumatic tools and equipment used for plant maintenance. Additional air capacity is available from a tie-in to the construction air system.

Provisions have also been made for utilizing the Station Air System for breathing air for plant personnel when respirators are required.

Cross connect capability exists between the Instrument Air and or Station Air Systems. The cross connect consists of a flexible coupling used to reduce noise and vibrations associated with the reciprocating action of the compressors. A flow check valve in this cross-connect prevents flow in the opposite direction. Cross connection capability also exists between the St. Lucie Unit 1 and St. Lucie Unit 2 instrument and station air systems. The cross connections for the instrument air lines have normally closed pressure regulating valves which are actuated by a decrease in pressure in either unit. The station air line has normally closed manual isolation valves.

9.3.1.3 System Evaluation

The power supplies for the compressor 2A and 2B motors are from the vital power distribution system. If a loss of offsite power occurs, these instrument air compressors can be manually

connected to the emergency diesel generators. A self-contained radiator cooling system is provided when the TCW pumps are not available. Compressors 2C and 2D are powered from non-vital distribution busses and can not be loaded onto the emergency power system.

Instrument Air System redundancy is provided by the two sets of instrument air compressor units (2 compressors per set) plus the cross connect capability from the Station Air System.

The instrument air dryer and filters are specified to remove all particulate matter (oil and dust) over 0.9 microns in size and to reduce the moisture content to a dew point of -40F at 100 psig.

Other than process lines the compressed air equipment is located in the Turbine Building which does not house any safety related equipment.

Since the Compressed Air Systems serve no safety function, they are of a nonsafety design. The portion of the instrument air and the station air piping and valves penetrating the containment are designed to Quality Group B and seismic Category I requirements (refer to Subsection 6.2.4). The containment instrument air header-outer isolation valve is designed to fail closed. The containment station air outer isolation valve is normally closed because no compressed station air is required in the containment during normal plant operation.

Safety related air operated valves are designed to fail in the position required to perform their safety function in the event a loss of air supply occurs. The exception is the containment vacuum relief valves which perform both a containment isolation function and vacuum relief function. Containment vacuum relief is discussed in Subsections 6.2.1 and 3.8.2.3. Other air operated containment isolation valve positions on power failure are indicated in Tables 6.2-52 and 53.

Air accumulators are provided on those air operated valves which are required for operation during the safe shutdown of the plant following an accident or to mitigate the consequences of an accident. The accumulators are designed to seismic Category I requirements.

Complete loss of instrument or station air during full-power operation or under accident conditions in no way reduces the ability of the Reactor Protective System or the Engineered Safety Features and their supporting systems to safely shut down the reactor or to mitigate the consequences of an accident.

The cross connection between units ensures isolation if the air pressure in one unit falls below a minimum of 80 psig.

9.3.1.4 Testing and Inspection

The compressed air systems are inspected and cleaned prior to service. Instruments are calibrated during testing and automatic controls are tested for actuation at the proper setpoints. Alarm functions are checked for operability and limits during preoperational testing. The compressed air systems are operated and tested initially with regard to flow paths, flow capacity, and mechanical operability.

The compressed air systems are in service during normal plant operation. System performance is therefore checked by the performance of the components utilizing instrument or service air.

9.3.1.5 Instrument Application

Table 9.3-2 lists the parameters used to monitor compressed air system operation.

The instrument air compressors are automatically started and stopped utilizing pressure switches, to maintain the air receiver pressure within the approximate range of 105-117 psig. The compressors can also be started manually by local pushbutton.

The standby instrument air compressor is started automatically on low air pressure. After starting, the compressor runs continuously until the operator stops it manually.

9.3.2 PROCESS SAMPLING SYSTEM

The process sampling system consists of a Primary Sampling System used to analyze reactor coolant and reactor auxiliary systems fluids; and a Secondary Sampling System used to analyze steam and feedwater chemistry.

The piping and instrumentation diagrams for the Primary Sampling System is shown in Figures 9.3-3, 9.3-3a, and 9.3-3b. The Secondary Sampling System is shown on Figures 9.3-4 and 9.3-4a. Tables 9.3-3 and 9.3-4 list the Primary Sampling System flow rates and design data. Steam generator blowdown sampling is functionally part of the Steam Generator Blowdown System, and is shown schematically on Figures 10.4-6 and 7. For sampling of process gaseous systems, see Section 11.3. The Post Accident Sampling System is discussed in Subsection 9.3.6.

9.3.2.1 Design Bases

Primary Sampling System (PSS)

The PSS is designed to provide a means of obtaining fluid samples from specific reactor coolant and auxiliary systems locations while minimizing release of radioactive contamination. These portions of the system required to maintain RCS integrity and containment isolation are designed to Quality Group A and B requirements as appropriate. Those portions of the system downstream of the containment isolation valves are non-nuclear safety. The primary sampling lines are equipped with isolation valves to maintain containment integrity as required. Safety features are provided to protect plant personnel and to prevent the spread of contamination from the sampling room when samples are being collected. Instrumentation is provided in the sampling room to monitor the temperature and pressure of the samples before they are collected.

Secondary Sampling System (SSS)

The SSS is designed to collect water and steam samples from the secondary cycle. The SSS has no safety function. It is not required to achieve a safe shutdown nor mitigate the consequences of design basis accidents. Thus the SSS is designated non-seismic, non-nuclear safety class.

9.3.2.2 System Description

Primary Sampling System

Analyses performed on the reactor coolant and auxiliary systems include tests for boron concentration, fission and corrosion product activity levels and concentration, dissolved gas and

corrosion product concentration, chloride concentration, reactor coolant pH and conductivity levels. Typically the samples are collected on a periodic basis. The primary sampling room, located at elevation 19.5 ft in the Reactor Auxiliary Building, contains instrumentation to monitor the temperature and pressure of each of the samples.

In order to obtain a representative sample, the sampling lines are purged to the volume control tank or flash tank prior to withdrawing the sample. The pressure and flow rate of each of the purge flows is indicated in the sample room. Normally seven to ten sample line volumes are purged at a flow rate twice that for sampling (see Table 9.3-3).

The sample volume varies according to the type of analysis to be performed. An appropriately sized sample vessel is used to collect the sample. From this sample, the amounts of O_2, H_2 and dissolved fission gases can be determined. The hot leg sample can also be collected at the sample sink where the sample volume required for a boron or chloride concentration analysis is approximately 250 ml while a crud concentration analysis sample volume could be as large as five liters. In addition to acquiring a sample via the sample vessel, an in-line dissolved gas analyzer may be used for monitoring RCS chemistry.

Secondary Sampling System

Typical analyses performed on the secondary side include tests for cation conductivity, pH, hydrazine and dissolved oxygen. The samples are continuously analyzed by automatic analyzers. The common site cold chemistry laboratory for St. Lucie Units 1 and 2 located at elevation 39.50 feet in the St. Lucie Unit 1 Turbine Building contains instrumentation to monitor the temperature and pressure of each sample. The secondary sample lines are sized for 0.5 gpm flow, except for steam generator blowdown sampling which is sized for 1 gpm and except for isokinetic sampling for corrosion products and dissolved oxygen. Flow rates are based on analyzer requirements.

The sample line valves used for taking grab samples are located in a sample sink in the cold chemistry laboratory. In order to assure that a representative sample is obtained, the sample lines are purged prior to withdrawing the sample. The pressure and flow rate of each of the purge flows is indicated in the cold chemistry laboratory. Normally seven to ten sample line volumes are purged at a flow rate twice that for sampling (see Table 9.3-3).

9.3.2.2.1 Sampling Points

Primary Sampling System

a. Reactor Coolant System Samples

Reactor Coolant System samples are taken from hot leg loop 2A, the pressurizer surge line and the pressurizer steam space.

1) Hot Leg Sample - The hot leg is sampled to check reactor coolant chemistry and radioactivity.

The two types of samples which may be collected from the hot leg of the Reactor Coolant System are (1) a high pressure, low temperature sample collected in a sample vessel and used for determining the amounts of O_2, N_2, H_2 and fission gases, and (2) a low pressure, low temperature sample

collected at the sampling sink and used for determining the chloride and boron concentration.

A high-pressure (~2235 psig) and high-temperature (~600°F) sample from the hot leg of the Reactor Coolant System is routed to the sampling system where it is cooled to 120°F or less in a sample heat exchanger and then may be reduced in pressure by a throttling valve to approximately 25 psia.

Before sampling, a purge flow is established by bypassing the sample vessel to assure that a representative sample is obtained. A portion of the flow is then drawn to the sample sink where a sample is collected, or the flow is diverted to the sample vessel where a high-pressure sample is isolated and collected. In addition to acquiring a sample via the sample vessel, an in-line dissolved gas analyzer may be used for monitoring RCS chemistry.

Grab samples can also be obtained with the sample vessel disconnected by using the sample vessel bypass lines.

2) Pressurizer Surge Line Sample - This taken at the sample sink to check the boron concentration in the pressurizer surge line. A high pressure, low temperature sample collected in a sample vessel is not required because the boron concentration analysis is normally the only test to be performed.

   The high pressure (~2235 psig), high temperature (~650 F) sample from the pressurizer surge line is routed to the sampling room where it is cooled to 120 F or less in a sample heat exchanger and then reduced in pressure across a throttling valve to approximately 25 psig.

   The sample normally flows through a purge line to the volume control tank or to the Waste Management System flash tank (if the volume control tank is not available) until sufficient volume has passed to permit the collection of a representative sample. A portion of the flow is drawn via the grab sample valve and a sample is collected. The purge flow is normally directed to the volume control tank in the Chemical and Volume Control System to minimize waste generation. The pressure and flow rate to the volume control tank is indicated in the sample room.

3) Pressurizer Steam Space Sample - This sample is taken to give a representative sample of fission products and noncondensable gases in the pressurizer steam space. The high pressure (~2235 psig), high temperature (~650 F) sample from the pressurizer steam space is routed to the sampling room where it can be collected in a sample vessel or a low pressure, low temperature sample can be collected in the sample sink as described above.

   Grab samples can also be obtained with the sample vessel disconnected by using the sample vessel bypass line. The sample vessel bypass lines

are used during the initial portion of the sample line purging operation to minimize sample vessel contamination.

a. Shutdown Cooling System Samples

The shutdown cooling suction line sample allows verification of the reactor coolant boron concentration prior to and during shutdown cooling. The pressure at the shutdown cooling sample point can be as high as 300 psig and the temperature can be as high as 350 F.

At the sampling room, the temperature and pressure are reduced to about 120 F and 25 psig, respectively. After the sample lines are purged, a sample is collected at the sample sink.

b. Safety Injection Tank Samples

Samples are taken at each safety injection tank outlet to verify the boron concentration in each safety injection tank. These samples are routed to the sample room through a throttle valve where the pressure is reduced to approximately 25 psig. After the sample lines are purged, a sample is collected at the sample sink.

c. Chemical, and Volume Control System Samples

Sample points for the Chemical and Volume Control System are located at the purification filter 2A inlet and outlet, at the outlet of purification filter 2B and in the purification ion exchanger outlet. The samples at the purification filter 2A inlet and outlet provide a means to determine the particulate activity decontamination factor (DF) for crud activity across the filter. The purification filter 2A inlet sample (letdown flow) can also be a backup to the hot leg sample. The sample at the outlet of purification filter 2B together with the purification filter 2A outlet sample gives a decontamination factor of soluble activity for the ion exchanger, and the combined ion exchanger and filter 2A decontamination factor for particulate activity. The purification filter 2A outlet sample, together with the samples from the outlet of the ion exchangers, gives the decontamination factor for the operating ion exchanger.

The samples from the Chemical and Volume Control System are at a temperature of 120 F and a pressure of approximately 25 psig. Since these are the approximate operating conditions of the sampling systems at the sampling room, no further reduction in temperature or pressure is required.

After the sample lines have been purged a sample is collected at the sample sink. Purging can be to the flash tank rather than to the volume control tank to obtain an adequate flow rate due to the low-differential head available.

d. Safety Injection System Samples

A possible additional sampling point is available for post accident sampling. The Safety Injection System sample is taken to check the boron concentration of the water during the recirculation period following a LOCA from the miniflow sample points. When shutdown cooling is placed in operation, the miniflow lines may be

isolated. During this period samples are then taken directly from the LPSI pump discharge header. The pressure varies at these sample points and the temperature could be as high as 300 F.

At the sample room, the flow is routed through a sample heat exchanger where the temperature is reduced to about 120 F and through a throttling valve where the pressure is reduced to approximately 25 psig. After the sampling lines are purged, a sample is collected at the sample sink.

Secondary Sampling System

The Secondary Sampling System (Figures 9.3-4 and 9.3-4a) continuously monitors the following sample points:

a. Main Steam - This sample is cooled by the St. Lucie Unit 2 Turbine Cooling Water System and its pressure reduced by throttling valves prior to analysis. The sample is analyzed for cation conductivity.

b. No. 5A and 5B Heater Outlet - These samples are cooled by the St. Lucie Unit 2 Turbine Cooling Water System and the pressure is reduced by throttling valves prior to analysis. The samples are analyzed for cation conductivity, pH and hydrazine.

c. Condensate Pump Discharge Header - The pressure of this sample is reduced by a throttling valve prior to analysis and then analyzed for cation conductivity and dissolved oxygen.

d. Condenser Hot Well - These samples are directly routed for analysis by condenser hotwell sample pumps. The samples are analyzed for cation conductivity.

e. Steam Generator Blowdown System Samples

Steam Generator blowdown samples are taken from the blowdown line of each steam generator. These high pressure (~885 psig), high-temperature (~550°F) samples are individually routed to the sample heat exchangers and cooled to approximately 120°F. The pressure of the samples is then reduced to about 75 psig by a throttling valve. EC284033

Grab samples can be obtained at the steam generator blowdown sampling sink. The steam generator blowdown sampling sink is located in the sampling room at elevation 19.50 feet of the Reactor Auxiliary Building. Steam generator blowdown sample lines are continuously monitored for radiation and automatically isolate on high radiation level, as described in Subsection 10.4.8. Discharges from continuous and grab samples of steam generator blowdown are directed to the discharge canal if no radioactivity is present. If necessary, steam generator blowdown sample effluent can be routed to a Steam Generator Blowdown System equipment drain tank.

The samples taken from the Steam Generator Blowdown System are used to continuously monitor the steam generator conductivity and pH, and are used as

an indication of reactor coolant activity levels. A low pressure, low temperature sample can also be taken at the steam generator blowdown sampling sink in order to monitor steam generator chemistry. Steam generator blowdown sample lines are sized for 1.25 gpm flow. EC284033

f. Additional Sampling of Feedwater, Condensate and Heater Drain Piping for Corrosion Products and Dissolved Oxygen

Four (4) isokinetic sample probes are installed in feedwater trains A and B piping near the feedwater flow nozzles, in the condensate piping upstream of the gland steam condenser, and in the heater drain piping downstream of the heater drain pumps. The isokinetic samples are routed to a corrosion product and dissolved oxygen samples panel where the feedwater samples are continuously analyzed for dissolved oxygen and the feedwater, condensate and heater drain samples are routed through corrosion product samplers/filters and flow totalizers.

9.3.2.2.2 Component Description

Primary Sampling System

a. Sample Heat Exchangers

The sample heat exchangers are a heliflow design. The heliflow design is based on spiral coils held together between two flat surfaces. Bolted together, the plate and shell confine a closed spiral shaped fluid circuit outside the coil, running entirely counterflow to the companion circuits inside the coils. Component cooling water flows through these circuits as sample fluid flows through the spiral coils.

b. Sample Vessels

The sample vessels are located inside the sample hood over the sample sink. Each vessel consists of a 300 cc stainless steel sampling cylinder with isolation valves and quick disconnect couplings. The sample vessel allows the operator to collect a high pressure, low temperature liquid or gas sample from which dissolved gases and fission gas activities can be determined. In addition to acquiring a sample via the sample vessel, an in-line dissolved gas analyzer may be used for monitoring RCS chemistry. Either the sample vessel or in-line analyzer may be aligned for use.

c. Sample Sink and Hood

The sample sink is located within the sample hood. All grab samples are obtained within the sample hood and over the sample sink. A demineralized water line is routed to the sink for flushing purposes. The sample sink drains to the chemical drain tank. The sink perimeter has a raised edge to contain spilled liquid. The entrance to the sample hood is shaped so that the air drawn into the hood by the hood fan enters in a smooth, uniform and unbroken pattern, thereby minimizing the possibility of local airborne activity outside the hood.

Secondary Sampling System

The secondary and steam generator sampling sink and hood assembly are similar to the primary sample sink and hood described in item (c), above. The secondary and steam generator sampling system consists of an automatic chemical analyzer panel and an associated sample sink, both located in the St. Lucie Unit 1 Turbine Building (location of the common site cold chemistry laboratory for St. Lucie Units 1 and 2). Continuous secondary samples are automatically analyzed by the chemical and analyzer panel and grab samples are obtained over the sample sink. Constant sample temperature is maintained by a chiller unit. The sample sink and the chemical analyzer panel both drain to the Turbine Building equipment floor drains. All system piping and valves are designed for applicable temperature and pressure and are constructed of corrosion-resistant stainless steel. System chiller is also designed for applicable temperature and pressure and is constructed of copper, bronze, cast iron and stainless steel wetted parts which are corrosion resistant for the application.

9.3.2.3 System Evaluation

Primary Sampling System

The sample sink, is located within the sampling hood and has a raised edge to contain any spilled liquid. To minimize the possibility of spillage the samples are either collected in plastic containers or in a stainless steel sample vessel. The sink is provided with a hood equipped with a fan exhausting to the plant vent. The hot leg sample tubing of the PSS is of sufficient length so that the overall transient time from the point of sampling to the containment wall permits the decay of short-lived radionuclides. This decay time within the containment allows normal access to the sampling room.

The primary sample lines penetrating the containment are each equipped with two normally closed electrically/pneumatically operated isolation valves which if open, close on a containment isolation actuation signal (CIAS). The containment isolation valves in the letdown line also close on CIAS thereby stopping flow from the Chemical and Volume Control System to the PSS. The containment isolation valves on the PSS are also designed to fail closed on loss of air supply. Remote control of these valves is provided to isolate any line failure which might occur outside of the containment. Should any of the remotely operated valves in the PSS fail to close after a sample has been taken, backup manual valves in the sampling room may be closed. Electrical interlocks exist for operator protection such that these remotely operated valves can be opened and closed at the local control station and only closed from the main control room. Once closed from the control room the valves can only be opened from the local control station. The sample sink drains to the chemical drain tank and any leakage from the grab sample valves in the sample sink drains to this tank. The work area around the sink provides adequate space for sample collection and storage.

The throttling valves in the PSS have a limited flow coefficient (C_v) range. This range is based on the flow required and the differential head available under all operating conditions. This limits the sample flow rate to the required value and prevents excessively high flow.

Secondary Sampling System

The Secondary Sampling System serves no safety function; a failure of any component does not affect the function of any NSSS equipment nor result in any radioactive release. The system evaluation of the steam generator blowdown sampling system is described in Subsection 10.4.8. Sampling procedures and Secondary Water Chemistry parameters are described in Subsection 10.3.5.4.

9.3.2.4 Testing and Inspection

The process sampling system is inspected and flushed clean prior to service using demineralized water. The systems are operated and tested initially with regard to flow paths, flow rate, thermal capacity and mechanical operability. Instruments are calibrated during plant hot functional testing. The setpoints of the relief valves are also checked at this time.

During plant start up the Primary Sampling System is hydrostatically tested as outlined in Section 14.0.

9.3.2.5 Instrument Application

Table 9.3-4a lists the parameters used to monitor the Primary Sampling System operation.

9.3.3 EQUIPMENT AND FLOOR DRAINAGE SYSTEMS

The Equipment and Floor Drainage System located in the Reactor Building (RB), Reactor Auxiliary Building (RAB) and Fuel Handling Building (FHB) collects waste liquids from various plant operational systems and conveys them from their points of origin by gravity, by pumps, or by a combination thereof, to the appropriate portion of the Waste Management System (see Section 11.2 for a discussion of the Liquid Waste Management System) or to the Site Drainage System (see Subsection 2.4.2). An independent and selfcontained Equipment and Floor Drainage System is provided for the Diesel Oil Storage Tank (DOST) Building and the Diesel Generator (DG) Building designed to route and isolate fuel oil spills. This system is discussed in Subsection 9.5.4.

9.3.3.1 Design Basis

Waste from radioactive drains is collected for samplings, analysis and processing as required, to assure that releases to the environment are in accordance with the limits established by 10 CFR 20.

The radioactive drainage system and non radioactive drainage systems are isolated from each other.

9.3.3.2 System Description

The radioactive drainage systems are divided into subsystems for the purpose of identification, isolation and routing. Drain fittings are selected to achieve rapid and unobstructed flow paths from the point of liquid influent to the point of disposal or treatment. Floors are pitched approximately 1/8 in per ft to floor drains located at low points of the floors for rapid carry-off of leakage, tank overflow or floor washdown.

Horizontal drainage piping is sloped at a uniform rate of 1/4 in per ft as standard practice. Cleanouts are provided on each drainage system to permit cleaning in the event a blockage occurs.

Storm, floor and equipment drains that are not potentially radioactive are routed to a settling basin. Refer to Section 2.4 for the site drainage features.

Influent to the Reactor Drain Tank

Liquid discharges from selected equipment and miscellaneous leak-off points, in the RB only, are collected by drain fittings and routed by a closed system, by gravity to the reactor drain tank located above elevation 7.58 ft. The reactor drain tank is drained by gravity to the reactor drain pumps located in the RAB and then pumped to the Waste Management System (see Figure 11.2-1).

Influent to the Equipment Drain Tank

a. Reactor Building

   Liquid discharges from equipment, tanks, miscellaneous leak-off points and floor drainage are collected by drain fittings and floor drains and are routed by gravity to the reactor cavity sump at elevation 7.00 feet in the RB. There are two sump pumps in the reactor cavity sump discharging the sump contents to the equipment drain tank located at elevation - 0.50 feet in the RAB. The reactor cavity sump is shown schematically on Figure 6.2-41. The equipment drain tank is part of the Liquid Waste Management System shown on Figure 11.2-6.

b. Reactor Auxiliary Building

   Liquid discharges from equipment, tanks, miscellaneous leak-off points and floor drainage located at elevation 19.00 feet and above are collected in drain fittings and floor drains and are routed by gravity to the equipment drain tank in the RAB (see Figure 1.1.2-6).

   Liquid discharges from equipment, tanks, miscellaneous leak-off points and floor drainage located at elevation - 0.50 feet and below are collected by drain fittings and floor drains and are routed by gravity to the ECCS pump room sumps 2A and 2B, located below elevation - 10 feet. Equipment drain lines to these sumps have redundant isolation valves with local controls and remote manual control capability from the control room. The ECCS room sump pumps (total of four: two pumps for each sump 2A and 2B) transfer the pump fluids to the equipment drain tank in the RAB. The ECCS pump room sumps are shown schematically on Figure 6.2-41.

   An ESF Leakage Collection and Return System (see Subsection 9.3.5) is provided to reroute the ECCS room sump fluid to the containment during the unlikely event of an accident so that the equipment drain tank and the LWMS are not contaminated with high activity fluid.

c. Fuel Handling Building

   Liquid discharges from equipment, tanks, miscellaneous leak-off points and floor drainage are collected by drain fittings and floor drains and are routed by gravity through the FHB to the RAB radioactive floor drain and equipment drain waste header, thence to the equipment drain tank.

Influent to the Laundry Drain Tank

Liquid discharges from clothes washing machines, service sink and floor drains in the laundry room, lavatories, showers and floor drains in hot toilets A and B, and floor drains in hot change

rooms A and B in the health physics area at elevation 19.00 feet are routed by gravity to the laundry drain tanks located at elevation - 0.50 feet. The laundry drain tanks are part of the Liquid Waste Management Systems and are shown on Figure 11.2-6.

Liquid discharges from equipment, miscellaneous leak-off points and floor drainage at elevation -0.50 feet in the vicinity of the laundry drain tank pumps and filter are collected by drain fittings and floor drains and are routed by gravity to the laundry drain sump located below elevation -0.50 feet. The laundry drain sump contains a sump pump with automatic level control for transfer of the liquid waste to the laundry drain tanks. The laundry drain tank fluids are treated by the balance of the Liquid Waste Management System (refer to Figure 11.2-6).

Influent to the Chemical Drain Tank

a. Reactor Auxiliary Building

   Liquid discharges from equipment drains in the vicinity of the waste ion exchanger, the sample room sink and floor drains in the rad chem lab and decontamination room, all at elevation 19.50 ft, are routed by gravity to the chemical drain tank located above elevation -0.50 ft. The chemical drain tank is part of the Liquid Waste Management System; see Figure 11.2-6.

   Liquid discharges from equipment, miscellaneous leak-off points and floor drainage at elevation - 0.50 ft in the vicinity of the chemical drain tank are collected by drain fittings and floor drains and are routed by gravity to the chemical drain sump located below elevation -0.50 ft. The chemical drain sump contains a sump pump with automatic level controls for transfer of the liquid waste to the chemical drain tank. The chemical drain tank fluids are treated by the balance of the Liquid Waste Management System as shown on Figure 11.2-6.

b. Fuel Handling Building

   The floor drain at elevation 34.00 ft and the floor drain at elevation 19.50 ft in the Cask Handling Facility are routed by gravity through the FHB, to the chemical waste header, thence to the chemical drain tank.

Radioactive Leak Detection Waste

The spent fuel pool and refueling canal leak detection drain piping discharge in the Fuel Handling Building are routed by gravity to leak monitoring stations described in Subsection 9.1.2.2.

One of the means for detecting leakage from the Reactor Coolant System utilizes the containment sump as a leakage collection point. Refer to Subsection 5.2.5 for a discussion of leakage detection from the Reactor Coolant System.

9.3.3.3 System Evaluation

The radiological consequences of effluents from the radioactive equipment and floor drainage systems are discussed in Section 11.2. Sources and volumes of waste are given in Table 11.2-7.

Equipment drains, floor drains and piping containing potentially radioactive fluids are made of stainless steel.

The Reactor Cavity Sump pumps, valves and piping arrangements are provided with interlocks and instrumentation to preclude the inadvertent discharge of highly contaminated fluids to the Equipment Drain Tank in the unlikely event of a design basis accident. Orifices are also provided in the sump pump recirculation and discharge piping to distribute flows to achieve proper system operation in the event of valve failure.

The sumps in the ECCS pump rooms at elevation - 10 ft in the Reactor Auxiliary Building have separate level detection instrumentation designed to seismic Category I and Class 1E requirements to enable the operator to identify which sump is filling and to initiate protective action as required. The remainder of the radioactive equipment and floor drainage system serves no safety function. Consequently, the system is not designed to seismic Category I requirements. Analysis of flooding resulting from failure of the Equipment and Floor Drainage System and one of the redundant safety related sumps is presented in Section 3.4 and Appendix 3.6F.

The eight inch diameter cast iron storm drain lines do not penetrate the Reactor Auxiliary Building exterior walls below elevation 22 feet. There are no lines from the radioactive equipment and floor drainage system that penetrate the Reactor Auxiliary Building below elevation 18.0 feet; the elevation associated with the maximum wave runup. Water is thus precluded from backflowing into the Reactor Auxiliary Building and affecting the operation of safety related equipment required to bring the plant to a safe cold shutdown.

The ability to detect a one gpm Reactor Coolant System leak is discussed in Subsection 5.2.5. Fuel pool leak detection is discussed in Subsection 9.1.3.3.

9.3.3.4 Testing and Inspection

Welded fittings in the radioactive equipment and floor drainage system are visually inspected after installation in the system. The equipment and floor drainage systems are hydrostatically tested before the system is fully enclosed.

9.3.3.5 Instrumentation Application

The instrumentation applications for the Equipment and Floor Drainage System are summarized as follows:

Sump	Location	Instrumentation Description
ECCS Pump Room	RAB	Hi and hi-hi water level alarms in the Control Room - See Figure 6.2-41.
Reactor Cavity	Reactor Building	Hi and hi-hi water level alarms in the Control Room - See Figure 6.2-41.
Contain-ment Sump	Reactor Building	Reactor Coolant System leakage detection refer to Subsection 5.2.5.
Laundry Drain Sump	RAB	Sump pump automatic initiation on high water level. Refer to Figure 11.2-6.
Chemical Drain Sump	RAB	Sump pump automatic initiation on high water level. Refer to Figure 11.2-6.

For those components identified in Subsection 9.3.3.2 as being part of the Waste Management System, refer to Figure 11.2-1 and 11.2-6 for a schematic representation of the instrumentation application.

9.3.4 CHEMICAL AND VOLUME CONTROL SYSTEM

9.3.4.1 Design Bases

9.3.4.1.1 Functional Requirements

The Chemical and Volume Control System (CVCS) is designed to perform the following functions:

a. Maintain the chemistry, purity, and the activity level of the reactor coolant within prescribed limits during normal operation and during shutdown

b. Maintain the required volume of water in the Reactor Coolant System compensating for reactor coolant contraction or expansion resulting from changes in reactor coolant temperature and for other reactor coolant losses or additions

c. Provide a controlled path for discharging reactor coolant to the Waste Management System; a further discussion of the Waste Management System is presented in Section 11.2

d. Control the boron concentration in the Reactor Coolant System to obtain optimum control element assembly positioning, to compensate for reactivity changes associated with major changes in reactor coolant temperature, core burnup, and xenon variations, and to provide shutdown margin for maintenance and refueling operations

e. Provide auxiliary pressurizer spray for operator control of pressure during the final stages of shutdown and to allow pressurizer cooling

f. Provide a means for functionally testing the check valves which isolate the Safety Injection System from the Reactor Coolant System

g. Collect the controlled bleedoff from the reactor coolant pump seals

h. Leak test the Reactor Coolant System

i. Provide an alternate means for filling the Reactor Coolant System

j. Provide a means for hydrostatic testing of the Reactor Coolant System

k. Provide a means for injecting concentrated boric acid into the Reactor Coolant System

l. Provide an injection point for zinc acetate solution into the RCS

9.3.4.1.2 Design Criteria

The CVCS is designed in accordance with the following criteria:

a. The CVCS is designed to accept the letdown when the Reactor Coolant System is heated at the rate of 75°F/hr and to provide the required makeup using two of three charging pumps when the Reactor Coolant System is cooled at the analyzed cooldown rate of 75°F/hr and the pressurizer level is raised prior to cooldown. EC290592

b. The CVCS is designed to supply makeup water or accept excess reactor coolant as power decreases or increases.

c. The CVCS is designed for 10 percent step power increases between 90 and 100 percent of full power and 10 percent step power decreases between 100 and 90 percent of full power, as well as for ramp changes of ± 5 percent of full power per minute between 15 and 100 percent power.

d. The volume control tank is sized with sufficient capacity to accommodate the inventory change resulting from a full to zero power decrease with no makeup system operation, assuming that the volume control tank level is initially in the normal operating water level band.

e. The CVCS provides a means for maintaining activity in the Reactor Coolant System within the limits specified in Section 11.1.

f. The CVCS is designed to maintain the reactor coolant chemistry within the limits specified in Table 9.3-5.

g. Letdown and charging portions of the system are designed to withstand the design transients defined in Table 3.9-2.

h. The CVCS is designed to provide sufficient boron addition to the Reactor Coolant System with one charging pump at a rate sufficient to counteract the maximum

reactivity increase due to cooldown at 75°F/hr (analyzed cooldown rate) with a simultaneous maximum xenon decay. EC290592

i. Components of the CVCS are designed in accordance with applicable codes as shown in Table 9.3-6. Quality Groups and seismic categories are as shown on Figures 9.3-5a, 9.3-5b and 9.3-5c.

j. The CVCS is designed to change the Reactor Coolant System boron concentration to the value required for a reactor shutdown for maintenance and/or refueling and to bring the Reactor Coolant System to the refueling concentration. The capability of this system for changing the Reactor Coolant System boron concentration is shown in Table 9.3-7.

k. The capability of the CVCS for boration and makeup is not compromised by stopping letdown flow.

Generic Letter 96-06, Assurance of Equipment Operability and Containment Integrity During Design Basis Accident Conditions, requested licensees to evaluate the effects of LOCA or MSLB containment heat-up on piping systems which breach the reactor containment or have isolated pipe sections. The evaluation determined that one CVCS penetration (#44) would be affected by thermal expansion but would not affect CVCS nor containment operability. (Reference JPN-PSL- SEMS-96-092)

9.3.4.2 System Description

9.3.4.2.1 System Functional Description

9.3.4.2.1.1 Plant Startup

Plant startup is the series of operations which bring the plant from a cold shutdown condition to a hot standby condition at normal operating pressure and zero power temperature with the reactor critical at a low power level.

The charging pumps and letdown backpressure valves are used during initial phases of Reactor Coolant System heatup to maintain the Reactor Coolant System pressure until the pressurizer steam bubble is established. One charging pump normally operates during plant startup to supply water to the regenerative heat exchanger to cool the letdown fluid in order to establish a controlled heatup rate of the Reactor Coolant System within prescribed limitations and to maintain proper Reactor Coolant System pressure during this period.

Oxygen scavenging during plant startup is discussed in Subsection 9.3.4.2.1.2.

During the heatup, the pressurizer water level is controlled manually using the backpressure control valves and the letdown control valves. The letdown flow is automatically diverted to the Waste Management System when the high level limit is reached in the volume control tank. The volume control tank is initially purged with nitrogen and a hydrogen overpressure is established.

The Reactor Coolant System boron concentration may be reduced in accordance with shutdown margin limitations. Compliance with the shutdown margin limitations is verified by sample

analysis. Technical Specifications are set to define those conditions of the CVCS necessary to assure safe reactor operation and shutdown.

9.3.4.2.1.2 Normal Operation

The normal reactor coolant flow path through the CVCS is indicated by the heavy lines on the piping and instrumentation diagrams, see Figures 9.3-5a, b, and c.

Process parameters for the CVCS are listed in Table 9.3-7. Equipment design parameters for the major components are shown in Table 9.3-6. Process flow, temperature, and pressure data are given in Table 9.3-8 with locations corresponding to those noted in the ellipses on Figures 9.3-5a, b and c. The tabulation of the process flow data is for three modes of purification loop operation and four modes of makeup operation. Basically, a letdown flow of 40 gpm is normal purification operation, a letdown flow of 84 gpm is intermediate purification operation, and a letdown flow of 128 gpm is maximum purification operation. (When purification is supplied from SDC, flow may be increased to a maximum of 150 gpm with one Ion Exchanger in operation, and is limited to a maximum of 360 gpm when the flow is returned to the shutdown cooling system and two Ion Exchangers are in parallel operation.) Typical operating conditions are also given for the various system operating modes in Table 9.3-8.

Normal operation includes hot standby operation and power generation when the Reactor System is at normal operating pressure and temperature. Letdown flow from one cold leg passes through the tube side of the regenerative heat exchanger for an initial temperature reduction. The pressure is then reduced by a letdown control valve (LCV-2110P or LCV-2110Q) to the letdown heat exchanger operating pressure. The final reduction to the purification subsystem operating pressure and temperature is made by the letdown heat exchanger and letdown backpressure valve (PCV-2201P or PCV-2201Q). The flow then passes through the purification filter in order to remove insoluble particulates from the reactor coolant (see discussion of filter media size below). A small fraction of the letdown flow may bypass the filter in two locations. The first stream, just before FE-2202, is directed through the boronometer (note: the boronometer is no longer used). The second stream, just after FE-2202, is directed through the process radiation monitor (which measures the reactor coolant radioactivity level). (Note: This monitor is no longer used. See Section 11.5.2.2.2). Both streams return to the main letdown stream which is then directed through one of the two purification ion exchangers.

The normal purification ion exchanger used during power operation contains mixed bed resin which becomes boron and lithium saturated through use and is used for removal of corrosion and fission products. The second purification ion exchanger contains mixed bed resin which is boron saturated through use and is used as necessary to control lithium concentration. The third full capacity ion exchanger, originally denominated as the deborating ion exchanger, contains mixed bed, stratified cation/anion and may be used for boron removal at the end of core cycle life when it is no longer practical to use a feed and bleed method for boron dilution because of the quantity of waste generated. However, one or two of the three ion exchangers can be used to deborate down to end of core cycle in accordance with plant procedures. Furthermore, all three ion exchangers are interchangeable depending on the operating conditions of the plant. To further the concentrations of Co and Ni corrosion products, one or more of the ion exchangers may contain a particle removal resin on top of a mixed resin bed.

Flow continues through a strainer and the second purification filter. Then it is sprayed into the volume control tank where hydrogen gas is absorbed by the reactor coolant. Flow also enters the volume control tank from the reactor coolant pump controlled bleedoff header.

Filter media for the 2A/2B purification filters is selected based on current and anticipated changes in plant loading or outage conditions. CVCS purification filter media was originally specified at 2 micron absolute in order to remove 95% by weight of the expected actual non-soluble particles from the RCS. Plant operating experience has shown that removal of a greater portion of particulates via the purification ion exchangers has ALARA and radioactive waste disposal benefits. Plant operating experience has also shown that use of smaller size media in the 2B purification filters to remove sub-micron particulates has ALARA benefits. Accordingly, the 2A filter upstream from the purification ion exchangers is typically bypassed to allow insoluble particulates to be filtered by the resin beds. Placing the 2A purification filter in bypass also assures adequate flow through the boronometer. Various grade filter media is used within the 2B CVCS purification filters to optimize removal of smaller non-soluble reactor coolant particles (PC/Ms 96167 & 98034).

The charging pumps take suction from the volume control tank and pumps the reactor coolant into the Reactor Coolant System. One charging pump is normally in operation and one letdown control valve is controlled to maintain an exact balance between letdown flowrate plus reactor coolant pump bleedoff flowrate and charging flowrate. The charging flow passes through the shell side of the regenerative heat exchanger for recovery of heat from the letdown flow before being returned to the Reactor Coolant System.

When the Shutdown Cooling System is operational, a flow path through the CVCS can be established to remove fission and activation products. This is accomplished by diverting a portion of the flow from low pressure safety injection pump discharge to the letdown line downstream of the backpressure control valves. The flow then passes through purification ion exchanger, the letdown strainer, the second purification filter, and is returned to the suction of the low pressure safety injection pumps.

A makeup system provides for changes in reactor coolant boron concentration. Boron is initially added to the Chemical and Volume Control System using the boric acid batching tank. Primary water is added to the boric acid batching tank, and the fluid is heated by immersion heaters. Boric acid powder is added to the heated fluid while the mixer agitates the fluid. A boric acid concentration as high as 12 weight percent can be prepared. Electric immersion heaters maintain the temperature of the solution in the boric acid batching tank high enough to preclude precipitation. Normally, the boric acid is mixed to maximum of 3.5 weight percent boric acid and then gravity drained to the boric acid makeup tank. This boric acid solution is supplied to the volume control tank via the boric acid makeup pumps, while the primary water stored in the primary water storage tank is supplied to the volume control tank via the primary water tank pumps. Five modes of makeup system operation are provided utilizing control board mounted flow indicating controllers, batching switches and totalizer counters. In the dilute mode, the primary water batching switch is used to introduce a preset quantity of primary makeup water into the volume control tank or the charging pump suction line and thence the reactor coolant system by means of the charging pumps. In the borate mode, the boric acid batching switch is used to introduce a preset quantity of concentrated boric acid in the same fashion. In the automatic mode, a preset ratio of boric acid and primary makeup water is automatically blended and introduced into the volume control tank upon demand from the volume control tank level program. The preset ratio is adjusted periodically by the operator to match the boric acid concentration in the reactor in the Reactor Coolant System. In the blend mode, the batching switches are used to introduce a preset quantity of boric acid and primary makeup water blended at a preset ratio into the volume control tank or the charging pump suction line. In the manual mode, the primary makeup water and concentrated boric acid flow rates are manually set to achieve the desired blend and the totalizer counters are used to monitor the quantities

introduced. The manual mode can be used to provide makeup to the refueling water tank or to the safety injection tanks.

The chemical addition subsystem provides a means for controlling the reactor coolant chemistry. Oxygen scavenging and pH controlling chemical additives are prepared in the chemical addition tank and injected by the chemical addition metering pump into the charging pump suction header. These chemicals are transported to the charging pump suction with primary water. The chemical addition tank is sized to hold a sufficient quantity of lithium to allow batch additions to the Reactor Coolant System. It also holds a sufficient quantity of hydrazine to reduce the reactor coolant oxygen concentration during startups and shutdowns to below the maximum acceptable level.

The volume of water in the Reactor Coolant System is automatically controlled using pressurizer level instrumentation. The pressurizer level setpoint is programmed to vary as a function of reactor power in order to minimize the transfer of fluid between the Reactor Coolant System and the CVCS during power changes. This linear relationship is shown on Figure 4.4-10. Reactor power is determined for this situation using the average reactor coolant temperature derived from hot and cold leg temperature measurements. A level error signal is obtained by comparing the programmed setpoint with the measured pressurizer water level. Reactor Coolant System volume control is achieved by automatic control of a standby charging pump and a letdown control valve in accordance with the pressurizer level control program shown on Figure 5.4-11.

Two letdown control valves piped in parallel are provided. The letdown control valve chosen for operation is normally controlled by the pressurizer level control program to obtain a letdown flow equal to the total charging flow minus the total reactor coolant pump controlled bleedoff flow. Normally, one charging pump is operated, but a two or three pump operation can be selected for higher purification flow if desired. Proper level can normally be maintained by valve positioning; large changes in pressurizer level due to power changes or abnormal operations result in automatic operation of a standby charging pump and/or modulation of the operating letdown control valve.

The volume control tank level is also maintained automatically. The letdown flow is automatically diverted to the Waste Management System when the highest permissible water level is reached in the volume control tank. When the makeup system is set to the automatic mode of operation, a volume control tank low level signal causes a preset solution of concentrated boric acid and primary water to be introduced into the volume control tank. A low-low level signal automatically closes the outlet valve on the volume control tank and switches the charging pump suction to the refueling water tank.

As part of the Gas Accumulation Management Program, the CVCS Charging Subsystem is provided with the capability to collect, indicate and vent gas that could be potentially transported to the suction side of the charging pumps. Sufficient gas collection volume is provided to ensure that gas binding of the charging pumps will not occur during a small break LOCA design basis accident. Gas collection standpipes, gas level indicators and vents are located upstream of the charging pumps, and gas level indicators and vents are located on the charging pump suction stabilizers. Periodic checks of the gas level indicator will determine when venting is required. A manual isolation valve between each gas collection standpipe/suction stabilizer and its associated gas level indicator allows for maintenance of the indicator without taking the Charging Subsystem out of service.

9.3.4.2.1.3 Plant Shutdown

Plant shutdown is accomplished by a series of operations which bring the reactor plant from a hot standby condition at normal operating pressure and zero power temperature to a cold shutdown for maintenance and/or refueling. The schedule of waste generation for various plant maneuvers is shown in Table 9.3-8.

Should degasification be necessary, it is performed prior to plant cooldown by venting the volume control tank hydrogen overpressure and diverting the letdown flow to the Waste Management System. Makeup is added to the volume control tank or charging pump suction in the normal manner. The purification flow may be increased to accelerate the degasification, ion exchange, and filtration process.

As discussed in NRC Generic Letter 2008-01 and INPO SER 2-05, the presence of unanticipated gas voids within fluid systems can challenge the ability of systems to perform their design functions due to issues such as gas binding, water hammer, injection delay times, etc. Requirements for maintaining Charging System operability with respect to gas intrusion are contained within Gas Accumulation Management Program documents.

Historically, the boron concentration was increased to the cold shutdown value prior to the cooldown of the plant. This methodology required Boric Acid Makeup Tank (BAMT) concentrations in the range of 8-12 weight percent boric acid.

As a result of the Boric Acid Concentration Reduction analysis provided in Combustion Engineering Report CEN-365(L) the methodology for plant shutdown has changed. This analysis was redone as part of the Cycle 19 reload analysis using the same base methodology as in CEN-365(L). The boron concentration needed to maintain the required shutdown margin was calculated for each temperature during the cooldown. The RCS is borated from the BAMT and RWT during cooldown as part of the normal inventory makeup due to coolant contraction. Throughout the cooldown, the RCS boron concentration is maintained above the concentration needed to maintain the required shutdown margin.

During the cooldown, the charging pumps, letdown control valves, and letdown backpressure valves are used to adjust and maintain the pressurizer water level. High charging flow results in a low level in the volume control tank which initiates automatic makeup at the selected shutdown boron concentration. During a cooldown, all or a portion of the charging flow is used to cool the pressurizer in the event the reactor coolant pumps are secured.

For a shutdown for refueling and after the reactor vessel head is removed, the low pressure safety injection pumps, the high head safety injection pumps, the containment spray pumps or the charging pumps may take the borated water from the refueling water tank and inject the water into the reactor coolant loops via the normal flow paths thereby filling the refueling cavity. The resulting concentration of the refueling cavity and the Reactor Coolant System is above the lower operating boron concentration limitation for the refueling water tank. Thus, the contents of the refueling cavity can be returned directly to the refueling water tank prior to plant startup without hindering plant operations due to low boric acid storage concentration. During refueling or periods of shutdown, a portion of the shutdown cooling flow from either of the loops through connections on the discharge side of the Low Pressure Safety Injection (LPSI) pumps is diverted to purify Reactor Coolant inventory. The flow is directed to the Chemical and Volume Control System (CVCS) just upstream of flow element FE-2202 and is processed by the CVCS

ion exchanger and filters. The flow is then returned to the suction of the LPSI pumps via the shutdown cooling lines (Figure 6.3-1a, b and 9.3-5a).

9.3.4.2.1.4 Chemistry and Purity Control

During normal operations and during plant shutdowns, the chemistry and purity of the reactor coolant are controlled to provide the following:

a. Minimum reactor plant radiation levels to permit ready access for plant maintenance and operation.

b. Avoidance of corrosion and excessive fouling of heat transfer surfaces.

c. Minimum corrosion rate of materials in contact with reactor coolant.

d. Maintain a coordinated Li-B control program.

Table 9.3-5 describes the chemistry of the reactor coolant.

The oxygen and chloride limits of 0.1 ppm and 0.15 ppm, respectively as presented in Table 9.3-5, were established from the relationships between oxygen and chloride concentrations and the susceptibility to stress corrosion cracking of austenitic stainless steel (1) (2). This indicates that if the chloride ion and oxygen concentrations are maintained below 0.15 and 0.10 ppm, then chloride stress corrosion does not occur.

This data reveals that no chloride stress corrosion occurs at oxygen concentrations below approximately 0.8 ppm. This oxygen limit was reduced by a factor of eight to give the conservative concentration of 0.1 ppm oxygen. The maximum amount of oxygen from air dissolved in water at 25°C is approximately eight ppm. At this concentration, a chloride concentration of less than approximately 1.5 ppm would preclude the possibility of chloride stress corrosion. This limit was also reduced by a factor of 10 to provide a conservative chloride limit of 0.15 ppm.

The fluoride limit of 0.15 ppm for reactor coolant is the result of the fluoride ion being identified as causing intergranular corrosion of sensitized austenitic stainless steels[(3)]. Based on this data, it is essential to minimize fluoride ions in the reactor coolant.

A zinc injection skid has been added and is located adjacent to the Boric Acid Batch Tank. A zinc acetate solution is pumped to the suction side of the RCS charging pumps via a positive displacement pump on the skid. The connection point for the zinc injection is downstream of the connection point for the metering pump for the chemical injection skid. A concentration of zinc between 5 and 10 ppb will be maintained in the reactor coolant. However, the maximum target value used in the Westinghouse non-fuel evaluations is ≤ 40ppb. The final concentration will be determined based on a zinc injection strategy developed by the chemistry department with support from the NSSS fuel supplier.

During the preoperational test period, 30 to 50 ppm hydrazine is maintained in the reactor coolant whenever the reactor coolant temperature is below 150°F. This is done to prevent halide-induced corrosion attack of stainless surfaces which can occur in the presence of significant quantities of fluorides or chlorides and dissolved oxygen. During heatup, any dissolved oxygen is scavenged by hydrazine thus eliminating one necessary ingredient for halide-induced corrosion. Elimination of oxygen on heatup also minimizes the potential for

general corrosion. At higher temperature, the hydrazine decomposes, not necessarily completely, producing ammonia and a high pH which aids in the development of passive oxide films on Reactor Coolant System surfaces that minimize corrosion product release. The corrosion rates of Ni-Cr-Fe alloy 600 and 300 series stainless steels decrease with time when exposed to prescribed reactor coolant chemistry conditions when rates approach low steady values within approximately 200 days. The high pH condition produced by high ammonia concentration (to 50 ppm) minimizes corrosion product release and assists in the rapid development of the passive oxide film. Most of the film is established within seven days at hot, high pH conditions[(4)]. To aid in maintaining the pH during this passivation period, lithium in the form of lithium hydroxide is added to the reactor coolant.

By the end of the preoperational test period, any fluorides or chlorides are removed from the Reactor Coolant System and concentrations in the reactor coolant are maintained at low levels by reactor coolant purification and demineralized makeup water addition. High hydrazine concentration is not required to inhibit halide-induced corrosion, but hydrazine, is still used during heatup to scavenge oxygen. This assures complete removal of oxygen on heatup while minimizing ammonia and nitrogen generation when hot and at power. When at power, oxygen is controlled to a very low concentration by maintaining excess dissolved hydrogen in the coolant. In the presence of a gamma and neutron flux, water both radiolyzes and synthesizes. The excess hydrogen in solution drives this reaction toward synthesis thereby maintaining a low oxygen concentration.

Since operation with a basic pH control agent results in lower general corrosion release rates from the Reactor Coolant System materials, and because the alkali metal lithium is generated in significant quantities by the core neutron flux through the reaction B-10 (n,α) Li-7, lithium hydroxide is selected as the pH control agent. The production rate of lithium from this reaction is approximately 100 ppb per day at the beginning of core life and decreases with core lifetime in proportion to the decrease in boron concentration. However, even though lithium is the choice for pH control, there has been an historical concern that higher concentrations of lithium may result in zircaloy corrosion and primary water stress corrosion cracking (PWSCC). Current industry consensus is that consequential specific lithium ion or pH effect on PWSCC is unlikely over the range of relevant primary chemistries and is small in comparison to other sources of variability in susceptibility. The plant's boron/lithium program places controls on pH and Lithium to mitigate zircaloy corrosion and PWSCC susceptibility.

The chemistry of the reactor coolant is maintained within specified limits by the purification ion exchangers and by controlling hydrogen and lithium concentration. Hydrogen, controlled in the reactor coolant by maintaining a hydrogen overpressure on the volume control tank, is present to scavenge any oxygen which may be introduced into the Reactor Coolant System. Lithium, added in the form of Lithium-hydroxide via the chemical addition metering pump and present due to the B-10 (N,α) Li-7 reaction in the Reactor Coolant System, is maintained in accordance with the boron/lithium control program in order to reduce corrosion product solubility. Also, the Li-7 promotes the deposition of corrosion products on cooler surfaces (steam generator) rather than hotter surfaces (core). Early in core life, lithium production is the greatest, and periodic removal by ion exchange is required to control the concentration below the upper limit.

Various reactions taking place within the reactor during operation result in the production of tritium, which appears in the reactor coolant as tritiated water. See Section 11.1 for discussion of tritium.

9.3.4.2.1.5 Reactivity Control

The boron concentration is controlled to obtain optimum control element assembly positioning to compensate for reactivity changes associated with changes in reactor coolant temperature, core burnup, xenon concentration variations and to provide shutdown margin for maintenance and refueling operations or emergencies.

The normal method of adjusting boron concentration is by the technique of feed and bleed. To change concentration, the makeup system supplies either primary water or concentrated boric acid to the volume control tank, and the letdown stream is diverted to the Waste Management System. Toward the end of a core cycle, the quantities of waste produced due to feed and bleed operations become excessive due to the low boron concentration. Deborating operations are then required to reduce the Reactor Coolant System boron concentration with one or two CVCS ion exchangers. The capability of the CVCS for changing the Reactor Coolant System boron concentration is shown in Table 9.3-8.

9.3.4.2.2 Component Description

The major components of the CVCS are described in this section. The principal component data summary including component design code and materials of construction is given in Table 9.3-6.

a. Regenerative Heat Exchanger

   The regenerative heat exchanger, located within the containment, conserves Reactor Coolant System thermal energy by transferring heat from the letdown stream to the charging stream and serves to minimize charging nozzle thermal transients. The heat exchanger is designed to maintain a letdown outlet temperature below 450°F under all normal operating conditions. This component is designed to accommodate the transients listed in Tables 3.9-2, 3.9-3a and 3.9-3b.

b. Letdown Heat Exchanger

   The letdown heat exchanger, located within the Reactor Auxiliary Building, uses component cooling water to cool the letdown flow from the outlet temperature of the regenerative heat exchanger to a temperature suitable for long term operation of the purification system. The unit is sized to cool the maximum rate of letdown flow from the maximum outlet temperature of the regenerative heat exchanger (450F) to the maximum allowable temperature of the ion exchange resins (140F). To prevent possible damage to the heat exchanger by excessive component cooling water flow, the flow control valves have a mechanical stop to limit the flow to 1230 gpm maximum required flow. The maximum flow rate to prevent letdown heat exchanger tube damage is 1500 gpm. This component is designed to accommodate the transients listed in Tables 3.9-2, 3.9-3a and 3.9-3b. EC290849

c. Purification Filter

   The purification filters, located in the Reactor Auxiliary Building, are sized for the maximum letdown flow rate. The purification filter, when not bypassed, is used to

remove crud from the reactor coolant. The filter unit contains a filter element which is discarded when the filter differential pressure becomes excessive.

d. Purification and Deborating Ion Exchangers

Three identical CVCS ion exchangers are provided. All ion exchangers, located within the Reactor Auxiliary Building, are sized for the maximum letdown flowrate. One ion exchanger is used continuously to remove impurities and radionuclides from the reactor coolant and a second one is used intermittently to control lithium concentration in the reactor coolant. As permitted by Engineering Evaluation,CVCS ion exchangers may contain an overlay of specialty resin to target removal of fine particulates and/or specific ion species. The third ion exchanger, denominated as the deborating ion exchanger, was originally designed to reduce the reactor coolant boron concentration at the end of the core cycle; however, one or two of the three ion exchangers can be used to deborate down to end of core cycle in accordance with plant procedures. Furthermore, all three ion exchangers are interchangeable depending on the operating conditions of the plant. The units usually contain mixed bed resins and are provided with all connections required to replace resins by sluicing. To further reduce the concentrations of Co and Ni corrosion products, one or more of the ion exchangers may contain a particle removal resin on top of the mixed resin bed as permitted by Reference 8.

e. Deleted

f. Volume Control Tank

The volume control tank, located within the Reactor Auxiliary Building, is used to accumulate letdown water from the Reactor Coolant System, to provide for control of hydrogen concentration in the reactor coolant, and to provide a reservoir of reactor coolant for the charging pumps. The volume control tank is sized to store sufficient liquid volume at the normal operating level band to allow a swing from full power to zero power without makeup operation, and to provide a volume for an automatic makeup control band of 500 gallons. The tank has hydrogen and nitrogen gas supplies and a vent to the Waste Management System to enable venting of hydrogen, nitrogen, helium, and fission gasses. The volume control tank is initially purged with nitrogen to exclude oxygen, and then a hydrogen overpressure is established.

g. Charging Pumps

The charging pumps, located in the Reactor Auxiliary Building, take suction from the volume control tank and return the purification flow to the Reactor Coolant System during plant steady state operations. Normally one charging pump is running to balance the letdown purification flowrate plus the reactor coolant pump controlled bleedoff flowrate. The standby charging pump is automatically started (stopped) as pressurizer level decreases (increases) due to plant loading (unloading) transients. The combined capacity of two of the charging pumps is sufficient to match the reactor coolant contraction rate at the design maximum rate of cooldown per Subsection 9.3.4.1.2a. On the starting or stopping of one or

more of the charging pumps, the charging pump bypass loop is used to minimize thermal transients to the charging piping. When the charging pump starts, the bypass is open. Charging flow does not enter the discharge pipe but flows back to the volume control tank. At the start charging pump signal, the throttling valve in the bypass line closes. As the valve closes, the pressure in the bypass line increases causing flow to begin to divert to the charging header. The timed closing of the bypass throttling valve thus causes a gradual flow ramp increase in the charging line and reduce thermal transients in the charging piping. The throttling valve position is determined by examining their status lights and charging flow instrumentation.

When the charging pump stop signal is received from the pressurizer level controller, the throttling valve begins to open and flow diverts through the bypass line to the volume control tank, and a decreasing gradual flow ramp results until the valve is completely open, then the charging pump stops. This system operates automatically whenever a charging pump is started or stopped.

The charging pump controls are located at the main control room, locally, and on the hot shutdown panel.

The third charging pump is available for manual control by the operator, if desired.

h. Suction Stabilizer and Pulsation Dampener

The charging pump suction stabilizers are located in the Reactor Auxiliary Building connected directly to the suction nozzle of each charging pump. These stabilizers are utilized to minimize the system losses attributed to acceleration head, thereby assuring that sufficient net positive suction head (NPSH) is always available for charging pump operation. The suction stabilizers are designed to reduce the acceleration head loss to five ft.

The charging pump pulsation dampeners are located in the Reactor Auxiliary Building and are connected directly to the discharge nozzle of each charging pump. These dampeners are utilized to reduce the downstream pressure pulsation that are generated by the piston action of the reciprocating charging pump. The pulsation dampeners limit the maximum pulsation level to 100 psi, peak-to-peak, in the discharge piping system.

i. Boric Acid Batching Tank

The boric acid batching tank, located in the Reactor Auxiliary Building and above the boric acid makeup tanks, is used for the preparation of concentrated boric acid which is gravity drained to the boric acid makeup tanks. The boric acid batching tank is designed to permit handling up to 12 weight percent boric acid. The boric acid batching tank is heated and insulated and receives demineralized water for mixing the boric acid solution. Sampling provision, mixer, temperature controller and electric immersion heaters are an integral part of the boric acid batching tank. The concentration of boron in the Boric Acid Batching Tank is

maintained at levels which ensure that the BAMT concentration will be between 2.5 to 3.5 weight percent boric acid.

j. Boric Acid Makeup Tanks

The boric acid makeup tanks, located in the Reactor Auxiliary Building, provide a source of boric acid solution for injection into the Reactor Coolant System. Each tank is insulated and one set of heaters per tank has been deenergized. The other set of heaters in each tank have been reset to heat the tank up to 70°F if the solution temperature drops below 60°F. Each boric acid makeup tank is capable of storing boric acid in concentration of 2.5 to 3.5 weight percent. The combination of the BAMTs and RWT contain sufficient volume to perform a safe shutdown following a loss of letdown at operating conditions. The borated water concentration and volume in each boric acid makeup tank (BAMT) is based upon maintaining 5000 pcm shutdown margin during a plant shutdown. Borated water is added to the RCS inventory to makeup for RCS volume contraction during the cooldown. Sufficient boric acid is added from a BAMT to the RCS to achieve a condition where the cooldown can be concluded using inventory and boric acid concentration from the Refueling Water Tank (RWT). The BAMT volumes and concentrations were calculated in Combustion Engineering Report CEN-365(L), dated July 1, 1988. The volumes and concentrations were reverified as part of the Cycle 19 reload analysis using the same base methodology as in CEN-365(L).

k. Boric Acid Makeup Pumps

The two boric acid makeup pumps, located in the Reactor Auxiliary Building, take suction from the overhead boric acid makeup tanks and provide boric acid to the makeup subsystem and to the charging pump suction header. The capacity of each boric acid makeup pump is greater than the combined capacity of all three charging pumps. The boric acid makeup pumps are also used to recirculate boric acid makeup tank contents, to pump from one boric acid makeup tank to the other, and to supply makeup to the refueling water tank. The boric acid makeup pumps are single stage centrifugal pumps with mechanical seals and liquid and vapor leakage collection connections. The heat tracing has been deenergized and removed.

l. Chemical Addition Tank

The chemical addition tank located in the Reactor Auxiliary Building, provides a means to inject chemicals into the charging pump suction header. Primary water is supplied for mechanical dilution and flushing operations.

m. Chemical Addition Metering Pump

The chemical addition metering pump located in the Reactor Auxiliary Building provides a means of injecting chemicals into the suction of the charging pumps at a controlled rate.

n. Boronometer (Note: the boronometer is no longer used. The valves, piping and

sample vessel have been abandoned in place. The Control Room display instruments and remote control circuits were removed by PC/M 03091.)

The boronometer, located in the Reactor Auxiliary Building, is in a line bypassing the purification filter. It supplements normal chemical analysis by utilizing the neutron absorptionometry technique to continuously monitor the concentration of the boron-10 isotope in the reactor coolant. A neutron source is positioned in the center of a cylindrical pressure vessel. Four neutron detectors located concentrically around the outer edge of the pressure vessel produce pulses whose rate varies inversely with the boron-10 concentration. The pulse rate signal is integrated to improve statistical accuracy and passed to a signal generator which produces a signal proportional to boron concentration. This signal is scaled and applied to a front panel meter located in the control room.

A portion of the response time of the boronometer is due to the time it takes for reactor coolant to be transported from the Reactor Coolant System to the boronometer. With a letdown rate of 40 gpm and a flow rate of 0.5 gpm through the boronometer, response time from the Reactor Coolant System to the boronometer is about 36 minutes. The time constant of the mixing process within the boronometer is about 30 minutes with a 0.5 gpm flowrate. With an added response time of less than one minute for the instrument electronics, the total system requires about 37 minutes to reach equilibrium following a step change in boron concentration. This system response time is adequate considering the relatively slow rate of boron concentration change in the reactor coolant.

Flow through the boronometer is controlled by a manual throttling valve located downstream of the boronometer. Another valve located upstream of the boronometer stops flow to the boronometer on high letdown temperature in order to protect it against possible damage. Remote samples in the CVCS provide a backup means of determining the boron concentration of the reactor coolant.

The accuracy of the boronometer is ± (1.0 percent of reading + 5 ppm) over the total range of 0-5000 ppm.

The boronometer electronics are constructed of solid state components utilizing printed circuits.

o. Process Radiation Monitor (Note: This monitor is no longer used. See Section 11.5.2.2.2)

The process radiation monitor, described in Subsection 11.5.2.2.2, provides a monitoring of reactor coolant gross gamma radiation and specific fission product gamma activity.

p. Piping and Valves

The piping of the CVCS is austenitic stainless steel. The component cooling water side of the letdown heat exchanger is carbon steel. All CVCS piping is in accordance with ASME Code, Section III, Class 1, 2 or 3, or ANSI B31.1.0, as applicable.

The following CVCS motor operated valves are subject to the requirements of NRC Generic Letter 89-10; V2501, V2504, V2508, V2509, V2514, V2553, V2554, V2555.

All valves except the diaphragm-type have backseats to limit stem leakage when in the open position. Diaphragm-type valves are used for resin sluicing operations for the ion exchangers. Manually operated valves for radioactive service with nominal sizes larger than two inches are provided with a double-packed stem and intermediate lantern ring with a leakoff connection. All actuator operated valves for liquid service have stem leakoffs or have the EPRI recommended five ring packing stack-up, with capped leakoff connections, installed in order to control valve stem leakage. The five ring packing stack up was previously reviewed and approved under PC/M 033-990D.

q. Electrical Heaters

Redundant electrical heat tracing is installed on all piping, valves, and other line-mounted components that may potentially contain concentrated boric acid solution for a significant period of time. These areas are located in the boric acid makeup portion of the CVCS. The heat tracing is designed to prevent precipitation of boric acid due to cooling. Boric acid heat tracing subsystem 2A has a design temperature of 170°F with a low temperature alarm setting of 162°F and a high temperature alarm setting of 185°F. Boric acid heat tracing subsystem 2B has a design temperature setting 155°F with a low temperature alarm setting of 148°F and a high temperature alarm setting of 185°F. The portions of the system that are heat traced are indicated on the piping and instrumentation diagrams, Figure 9.3-5.

The Boric Acid heat tracing system is utilized only in the boric acid batching tank, the piping through the batching strainers and the piping up to the boric acid makeup tanks.

The heat tracing is designed to maintain the fluid temperature of the heat traced components at 170± 4°F with insulation designed as described below. This criterion assures that the boric acid is at least 35°F above the saturation temperature for 12 weight percent boric acid solution.

Two independent full capacity electrical strip heater banks are installed on each boric acid makeup tank. The heaters are sized to compensate for heat loss through the boric acid makeup tank insulation to the surroundings and to maintain the boric acid makeup tank temperature at 170°F ± 4°F. A common alarm with high and low temperature annunication is provided for each boric acid makeup tank.

By going to a lower boron concentration of 2.5-3.5 weight percent boric acid the heat tracing is no longer required to be energized for safety considerations (Reference 6). One set of heaters, per tank are energized to prevent precipitation if the solution temperature drops to 60°F. The temperature controllers have been modified to turn the heaters on at 60°F and off at 70°F.

The boric acid batching tank is provided with corrosion resistant electrical immersion heaters. The heaters are sized to supply sufficient heat in six hours to increase the temperature of 500 gallons of 12 weight percent boric acid solution from 40 to 170°F, including the heat of solution required to dissolve the boric acid granules. The boric acid is added to the boric acid batching tank maintaining the demineralized water temperature above the boric acid crystalization point.

r. Thermal Insulation

Thermal insulation is required for conservation of heat and to protect personnel from contact with high temperature piping, valves, and components. Equipment and sections of the CVCS that are insulated are the regenerative heat exchanger, the charging and auxiliary spray lines downstream of the regenerative heat exchanger and the letdown line from the reactor coolant loop to the letdown heat exchanger. Thermal insulation on these sections is designed to limit the insulation surface temperature to 140°F based on ambient temperature of 80°F and the maximum expected piping and component temperature. Electrically heat traced piping, valves, pumps, and other components are insulated to limit the insulation surface temperature to 120°F based on an ambient temperature of 80°F and the controlled component temperature.

Thermal insulation on the boric acid batching tank is designed to limit heat losses to 65 BTU/hr ft^2 based on a boric acid batching tank temperature of 170°F and an ambient temperature of 80°F. Thermal insulation that does not cause chloride stress corrosion is used on all stainless steel surfaces where moisture from that insulation could reach the stainless steel.

s. Refueling Water Tank - The Refueling Water Tank (RWT) provides makeup for contraction during the cooldown after the BAMTs are used. The boron concentration in the RWT raises the RCS boron concentration during later stages of the cooldown, thus maintaining the concentration above the concentration needed to maintain the required shutdown margin.

The RWT provides an independent source of borated water that can be used to compensate for core reactivity change and expected transients throughout core life. A cooldown on the RWT alone can be conducted as follows:

1) Perform a feed-and-bleed to raise the RCS boron concentration from 0 ppm to 388.9 ppm boron.

2) Perform a plant cooldown to 325°F and 275 psia. Charge from the RWT only as required to makeup for coolant contraction.

3) Align the shutdown cooling system after the RCS pressure is less than 275 psia and continue the cooldown to 200°F using the RWT for coolant contraction makeup.

t. Zinc Injection

A zinc injection skid is mounted in the Reactor Auxiliary Building, elevation 43 ft., in the Boric Acid Batch Tank Room. The skid consists of two positive displacement pumps, one mixing tank for zinc solution, one recirculation pump to mix the solution, and piping components and controls. The zinc solution is pumped to the suction of the charging pumps. The connection point for the zinc injection is on the vent line upstream of valve V2838 on elevation 19.5 feet of the Reactor Auxiliary Building. Design data for the zinc injection skid are shown in Table 9.3-6.

9.3.4.3 Safety Evaluation

9.3.4.3.1 Performance Requirements, Capabilities, and Reliabilities

9.3.4.3.1.1 Boric Acid Storage

The boric acid solution is stored in insulated boric acid makeup tanks. Two independent non-1E heating systems are provided for the batching tank and associated interconnected piping. Heat tracing is required only in those sections of the boric acid makeup system that could contain greater than 3.5 weight % boric acid solutions. The heat traced sections include the boric acid batching tank, the piping through the batching strainer and the piping up to the boric acid makeup tanks. Automatic temperature controls and independent local alarm circuits are included in the heat tracing system.

The remaining sections of the boric acid makeup system do not require heat tracing. The boric acid concentration in these sections is between 2.5 and 3.5 weight percent. Figure 9.3-8 is a plot showing the solubility of boric acid for temperatures ranging from 32 to 160 degrees. Note that the solubility of boric acid at 32 degrees is 2.52 weight percent and at 50 degrees is 3.49 weight percent. At or below a concentration of 3.5 weight percent boric acid, the ambient temperature of the auxiliary building will be sufficient to prevent precipitation within the boric acid makeup system. As an additional precaution, one set of heaters for each tank have remained energized. These heaters will heat the solution in the BAMT to 70°F if the temperature falls to 60°F.

The minimum amount of boric acid solution stored in one BAMT and the RWT, or two BAMTs is sufficient to bring the plant to a safe shutdown condition following loss of letdown at any time during plant life if the volume required by Technical Specification Figure 3.1-1 is maintained for the given concentration.

The borated water concentration and volume requirements are based upon maintaining a 5000 pcm shutdown margin during the cooldown to cold shutdown. Borated water is added to the RCS inventory to makeup for RCS volume contraction during the cooldown. Sufficient boric acid is added from the BAMT to the RCS to achieve a condition where the cooldown can be concluded using inventory and boric acid concentration from the Refueling Water Tank (RWT).

9.3.4.3.1.2 Charging Subsystem

The charging pumps are used to inject concentrated boric acid into the Reactor Coolant System. Under normal operating conditions, one charging pump is selected to run and one pump is selected for standby operation. The third pump is normally not running. The standby

charging pump is automatically controlled by the pressurizer level control. For a loss of offsite power (LOOP) the running pump(s) will automatically load onto the emergency diesel generator(s). If a pump is in standby at the time of the LOOP, the pump will remain automatically controlled by the pressurizer level control. On SIAS, the charging pump suction is switched from the volume control tank to the gravity feed line from the boric acid makeup tanks. This prevents a loss of water supply to the charging pumps . During SIAS with offsite power available, any running charging pump would remain running and the standby charging pump would automatically start. The third charging pump is normally not running. However, for certain plant conditions, all three pumps may be running. For a SIAS concurrent with a LOOP, any running charging pumps are momentarily de-energized and are then automatically re-energized (Table 8.3-2) immediately after the diesel generator breaker closes.

The operator can manually start them. Should the charging line inside the containment be inoperative for any reason, the line may be isolated outside the containment, and the charging flow may be injected via the Safety Injection System. The malfunction or failure of one active component does not reduce the ability to borate the Reactor Coolant System since an alternate flow path is always available for emergency boration.

The capability of the CVCS to borate and to makeup is not compromised by stopping letdown flow. Because safe shutdown can be achieved without letdown flow, this portion of the CVCS, which includes the letdown heat exchanger, has no specific requirements to function for post-accident operation. It is for this reason that the designated non-nuclear safety CCW flow is terminated by a SIAS. Further, for accidents which involve an SIAS or CIAS the letdown line is automatically isolated by these signals. If a seismic event ruptures the non- seismic letdown line outside containment (without coincident SIAS or CIAS), the pressure differential switch PDIS-2216 will sense high flow through the regenerative heat exchanger and automatically close the isolation valve V2516 within 6 seconds. This maintains the affected area as a mild environment as evaluated in Section 3.1.3.2 of the Environmental Qualification Report and Guidebook (2998-A-451-1000).

One charging pump has the capability of replacing the flow loss to the containment due to leaks in small Reactor Coolant System lines, such as instrument and sample lines. These lines have flow restricting devices.

The charging pumps and all related automatic control valves are connected to an emergency bus if the normal power supply system should fail. Two charging pumps and two boric acid makeup pumps are started and automatically loaded on to the diesel generator upon SIAS. Any charging pump that was previously running (start or AUTO modes) and any boric acid makeup pump that was previously running prior to a failure of the normal power supply system automatically loads and restarts onto the diesel generator. A charging or boric acid makeup pump not previously running can be manually started after the diesel generator breaker closes. There are two emergency diesel generator sets available for this service, and the components are aligned to the diesels as designated in Subsection 8.3.1. Provisions for gravity feed from the boric acid makeup tank to the charging pumps are provided on SIAS.

Failure of non-code portions of the CVCS or non-code systems which interface with the CVCS does not prevent the CVCS from performing its required safety functions.

As part of the Gas Accumulation Management Program, the CVCS Charging Subsystem is provided with the capability to collect, indicate and vent gas that could be potentially transported to the suction side of the charging pumps. Sufficient gas collection volume is provided to ensure

that gas binding of the charging pumps will not occur during a small break LOCA design basis accident. Gas collection standpipes, gas level indicators and vents are located upstream of the charging pumps, and gas level indicators and vents are located on the charging pump suction stabilizers. Periodic checks of the gas level indicator will determine when venting is required. A manual isolation valve between each gas collection standpipe/suction stabilizer and its associated gas level indicator allows for maintenance of the indicator without taking the Charging Subsystem out of service.

9.3.4.3.1.3 Shutdown without Letdown

It is demonstrated below that the letdown portion of the CVCS is not required to achieve a shutdown from hot standby condition to the shutdown cooling window. Thus the letdown portion is appropriately designed non-seismic.

9.3.4.3.1.3.1 Cooldown Requirement

Three effects must be accounted for in any cooldown, viz., (a) accommodating the reactivity inserted by cooldown of the reactor, (b) accommodating reactor coolant shrinkage and (c) insuring sufficient coolant is available for pressurizer pressure control. These effects are handled as follows:

a. With the BAMT boric acid concentration meeting the storage requirements shown in Technical Specification Figure 3.1-1, boration of the RCS will be performed concurrent with plant cooldown. The boric acid analysis conservatively determined the boron required at each temperature during cooldown to maintain the desired shutdown margin. The boron delivered during the cooldown provides an actual concentration much greater than required. The inventory makeup comes first from the BAMTs and then from the RWT. Alternately the RWT alone can provide inventory makeup and maintain adequate shutdown margin.

9.3.4.3.1.3.2 Shutdown Capability Assumptions

The assumptions used to demonstrate the ability to place the plant on shutdown cooling without the letdown portion of the CVCS are as follows:

a. The limiting case is at end of life. Thus, hot zero power end of life conditions are assumed. The boron concentration is 0 ppm.

b. The reactor coolant pumps are not available.

c. Reactor Coolant System temperature control is accomplished by use of the secondary side steam dump or atmospheric dump valves.

d. Pressurizer pressure control is accomplished via the auxiliary spray line.

e. Motor operated valve V2504 can be either remotely or manually opened to allow the charging pump to take suction from the RWT.

f. Only one charging pump is used.

9.3.4.3.1.3.3 Entering Shutdown Cooling

The plant is brought to shutdown cooling as follows for EPU operation:

a. Reactivity insertion due to cooldown of reactor:

   The charging pumps with suction from the boric acid makeup tank via the boric acid makeup pump discharge line or the gravity feed line (3-CH-939) deliver 3.1 to 3.5 weight percent boric acid (5420-6119 ppm boron) to the Reactor Coolant System via the charging line. The pressurizer level is maintained constant. The boron concentration of the RCS is raised from 0 ppm to at least 643 ppm (RWT boron concentration is at 1800 ppm boron) by charging to makeup for coolant contraction during the shutdown to shutdown cooling entry conditions. This ensures that at each temperature during the cooldown the required shutdown margin is maintained by comparing the required boron concentration to the boron concentration resulting from charging to makeup for coolant contraction. The required boron concentration to maintain the shutdown margin at the shutdown cooling entry condition is 611 ppm boron. The BAMT volume depends on the boric acid concentration supplied, and it ranges from 8,750 gallons of 3.1 weight percent boric acid to 7,550 gallons of 3.5 weight percent boric acid. Makeup for the remainder of the cooldown is supplied from the RWT via motor operated valve V2504 and the charging pumps. The required RWT volume also depends on the BAMT concentration and volume supplied, and it conservatively ranges from 12,000 to 16,000 gallons.

b. Depressurization to the shutdown cooling window:

   The Reactor Coolant System is depressurized using spray supplied by the charging pumps. Cooldown rate is controlled within the Technical Specification limit.

   To place shutdown cooling in service the Reactor Coolant System temperatures and pressure must be reduced to about 276 psia* and 325°F.

c. Shutdown cooling initiation:

   Once the shutdown cooling window is reached, the plant is placed on shutdown cooling. The cooldown is continued using shutdown cooling until cold shutdown conditions are reached. The RWT is used as the source of RCS makeup. The RWT delivers enough boron to raise the RCS boron concentration to at least 684.9 ppm, which is well above the concentration of 634.9 ppm boron which is necessary to maintain the required shutdown margin at 200°F for pre-EPU operation. For EPU operation, the RWT delivers enough boron to raise the RCS boron concentration to at least 728 ppm, which is above the 708 ppm boron necessary to maintain the required 200°F shutdown margin.

9.3.4.3.1.3.4 Shutdown Without Letdown and Without Auxiliary Spray

---

* The operating limit for SDC entry has been conservatively established at 275 psia.

The above method, Subsection 9.3.4.3.1.3, utilized pressure control via either one of the auxiliary spray valves. If it is assumed that these valves are also not available, the operator still can bring the plant to a safe shutdown as follows:

It is assumed that the pressurizer is at thermodynamic equilibrium. This is a reasonable assumption since one charging pump flow of 44 gpm delivers water to the Reactor Coolant System at a rate of about 6.1 lbs/second (Reactor Coolant System inventory is about 450,000 lbs.) It is also assumed that the insurge water is thoroughly mixed with the water already in the pressurizer. With these assumptions, the cooldown to 260 psig shutdown cooling window without use of auxiliary spray is accomplished as follows:

a. The pressurizer is slowly filled with fluid via the surge line by charging with suction from the boric acid makeup tank until the level is increased from 450 to 1300 cubic feet. The equilibrium pressure is about 2100 psig and about 4740 gallons of 2.5 to 3.5 weight percent boric acid are added from the boric acid makeup tank for pre-EPU operation. For EPU operation, the weight percent boric acid added from the makeup tank ranges from 3.1 to 3.5.

b. The saturation temperature in the pressurizer is about 643°F whereas the Reactor Coolant System temperature (Tavg) is about 561°F. The Reactor Coolant System must remain subcooled. Thus, Reactor Coolant System cooldown via the atmospheric steam dump is initiated to reduce the Reactor Coolant System temperature to about 497°F. Shrink causes the pressurizer level to fall to about 325 cubic feet. During cooldown a maximum of 1400 gallons are supplied from the BAMT to make up for RCS leakage and RCP controlled bleed off. If the contents of the BAMT have been charged, motor operated valve V2504 is opened and the remainder of the makeup water is supplied by the RWT.

c. The pressurizer is again slowly filled from the refueling water tank from 325 to 1300 cubic feet. The equilibrium pressure is about 1390 psig and 586°F. About 6680 gallons are added from the refueling water tank. Again the Reactor Coolant System is maintained subcooled by cooling down via the atmospheric steam dumps; the Reactor Coolant System temperature is reduced from 497°F to 400°F. Shrink causes the pressurizer level to fall to about 325 cubic feet. During cooldown a maximum makeup of 2135 gallons are supplied from the RWT.

d. The pressurizer is again slowly filled from the refueling water tank from 325 to 1300 cubic feet. The equilibrium pressure is about 690 psig and 500°F. About 8160 gallons are added from the refueling water tank. Again, the Reactor Coolant System is maintained subcooled by cooling down via the atmospheric steam dumps; the Reactor Coolant System temperature is reduced from 400°F to 250°F. Shrink causes the pressurizer level to fall to about 325 cubic feet. A maximum of 3550 gallons are again supplied from the RWT for makeup.

e. The pressurizer is again slowly filled from the refueling water tank from 325 to 1300 cubic feet. The equilibrium pressure is about 180 psig and 370°F. About 9760 gallons are added from the refueling water tank. The shutdown cooling window has been reached, the plant is placed on shutdown cooling. The cooldown is continued using shutdown cooling until cold shutdown conditions are reached. Raising pressurizer level at the start of the plant cooldown introduces

more BAMT inventory to the Reactor Coolant System. This will raise the boron concentration higher for a given RCS temperature than maintaining constant pressurizer level as in Section 9.3.4.3.1.3.3. Since the previous section demonstrated adequate boric acid delivery to maintain the desired Shutdown Margin at all temperatures during the cooldown, the method presented in this section will supply adequate boric acid to maintain the desired Shutdown Margin also.

9.3.4.3.1.3.5 Shutdown Using Safety Injection Tanks as a Backup Water Supply

During the period of cooldown from hot standby to cold shutdown conditions, the decrease in temperature results in contraction of the Reactor Coolant System inventory. To maintain the RCS level, makeup water from the refueling water tank (RWT) or primary water tank (PWT) is used in conjunction with the borated water from the boric acid makeup tanks (BAMT) and injected into the RCS via the charging pumps. However, since neither the RWT or the PWT is missile protected, tornado induced missiles could result in the loss of contents of those tanks. With the postulated loss to these two water sources due to tornado effects, the boric acid makeup tank inventory in conjunction with the safety injection tank inventory provides adequate fluid makeup to compensate for the RCS shrinkage.

During the cooldown period it was conservatively assumed that the shrinkage in the RCS inventory would be balanced by an equal amount of water. Based upon this assumption (i.e.s pressurizer level held constant) cooldown from full power to a cold shutdown temperature of 200°F requires approximately 19,000 gallons of makeup. The contents of the safety injection tanks and the boric acid makeup tanks are in excess of 40,000 gallons.

During the initial phase of cooldown, the RCS shrink makeup is provided by the BAMTs via the charging pumps. During the final stage of cooldown one safety injection tank is isolated and water drawn from it. A two inch line connecting the common SIT drain line with the volume control tank (VCT) has been provided. Water drained to the volume control tank from the SITs can then be injected into the Reactor Coolant System via the charging pumps. All the components utilized are designed to Quality Group B or C requirements and are protected against the effects of pipe rupture, jet impingement and tornado induced missiles.

9.3.4.3.1.3.6 CVCS Shutdown Requirements to Meet Branch Technical Position RSB 5-1, "Design Requirements of the Residual Heat Removal System"

Branch Technical Position RSB 5-1 requires that the plant can be brought to Shutdown Cooling System initiation in less than 36 hours from the control room using only seismic Category I equipment, assuming the most limiting single failure, and with only onsite or only offsite power. Also, in demonstrating that the system can perform its function assuming a single failure, limited operator action outside of the control room would be considered acceptable if suitably justified.

St. Lucie Unit 2 is classified per RSB 5-1 as a class 2 plant (i.e. partial implementation of the requirements of RSB 5-1 in accordance with Table 1 is recommended). As such, the safe shutdown scenarios that should be applied are those that consider single failure criteria or a safe shutdown earthquake (SSE). Single failure, and SSE events should not be considered coincidentally.

For a situation involving the loss of offsite power, the most limiting single failure within the CCS with regard to the cooldown is the failure of a dc bus and associated diesel generator. This

failure disables one auxiliary spray valve and one train of components associated with charging and boron addition. The charging line isolation valves to each loop will fail open upon loss of power. Letdown flow will be isolated on the loss of power. With offsite power unavailable valve V2504 located on the pump suction line from the refueling water tank can be operated manually. This valve is powered from vital MCC 2B5, but no credit is taken for its remote operation because it is not class 1E. In order for the plant to be brought to cold shutdown, it is justifiable for operator action being required to open valve V2504 manually outside the control room (as discussed in response 3 to Item A.2 within Subsection 5.4.7.5). The procedure to bring the plant to cold shutdown conditions for this scenario is the same as for shutdown without letdown and without auxiliary spray described in Subsection 9.3.4.3.1.3.4.

9.3.4.3.1.3.7 Shutdown with Loss of a Power Supply

An evaluation of the effect of the loss of different power supplies on the ability to achieve a cold shutdown conditions is given below.

With the loss of Power Panel 220 (120V ac) or 480V MCC 2A6 (non-essential portion), one channel of the Pressurizer Level Control System loses power. However, the operator switches to the other channel for level control. If the operator does not switch channels, the charging pumps contine to operate since they automatically receive emergency power (manual control is also available) and letdown is isolated (control valves close). The operator conducts a plant cooldown and achieves the shutdown boron concentration in the RCS without letdown by balancing charging flow with volume shrinkage of the reactor coolant (see Subsection 9.3.4.3.1.3). Primary water flow control is not available, but boric acid flow is available for achieving a cold shutdown boron concentration. Additionally, emergency boration can be implemented. The loss of Power Panel 221 (120V ac) or 480V MCC 2B6 is similar to the loss of Power Panel 220, except the boric acid flow controller and volume control tank level indication are not available. Therefore, the operator, by procedure, emergency borates by balancing charging with coolant contraction during the cooldown. Additionally, both letdown control valves fail closed and are not operable by either PLCS channel. The shutdown procedure is the same as shutdown without letdown (see Subsection 9.3.4.3.1.3).

The loss of 480V MCC 2A2 or 480V MCC 2B2 only affects the boric acid makeup tanks heater controls or temperature alarms.

A boron concentration of 2.5 to 3.5 weight percent no longer requires temperature control of the boric acid makeup tanks provided that the boric acid makeup tank solution temperature remains above 55°F.

The loss of a bus (either 2A2, 2B2, or 2AB) does disable a charging pump. There are two other redundant charging pumps so there is no effect on the charging flow. Also, on loss of power to the regenerative heat exchanger differential pressure instrumentation and associated control panel, there is no negative effect since this instrument is not required for shutdown.

9.3.4.3.2 Overpressure Protection

In order to provide for safe operation of the CVCS, relief valve protection is provided throughout the system. The following is a description of the relief valves that are located in the CVCS:

a. Intermediate Pressure Letdown Relief Valve (V2345)

The relief valve downstream of the letdown valves protects the intermediate pressure letdown piping and letdown heat exchanger from overpressure. The valve capacity is equal to the capacity of both letdown control valves in the wide open position during startup operation. The relief valve set pressure is 600 psig which is less than the design pressure of the intermediate pressure letdown piping and letdown heat exchanger.

b. Low Pressure Letdown Relief Valve (V2531)

The relief valve downstream of the letdown backpressure control valves protects the low pressure piping, purification filters, ion exchangers, and letdown strainer from overpressure. The valve capacity is equal to the capacity of intermediate pressure letdown relief valve. The set pressure is equal to the design pressure of the low pressure piping and components. Administrative controls are provided to govern alignment of the purification system components with the shutdown cooling system to prevent lifting V2531.

c. Charging Pump Discharge Relief Valves (V2324, 2325, 2326)

The relief valves on the discharge side of the charging pumps are sized to pass the maximum rated flow of the associated pump with maximum backpressure without exceeding the maximum rated total head for the pump assembly. The valves are set to open when the discharge pressure exceeds the Reactor Coolant System design pressure by 10 percent.

d. Charging Pump Suction Relief Valves (V2588, 2318, 2321)

The relief valves on the suction side of the charging pumps are sized to pass the maximum fluid thermal expansion rate that occurs if all pumps were operated with the suction and discharge isolation valves closed. The set pressure is less than the design pressure of the charging pump suction piping.

e. Volume Control Tank Relief Valve (V2115)

The relief valve on the volume control tank is sized to pass a liquid flowrate equal to the sum of the following flowrates: the maximum operating flowrate from the reactor coolant pump controlled bleedoff line, the maximum letdown flowrate possible without actuating the high flow alarm on the letdown flow indicator, the design purge flowrate of the sampling system, and the maximum flowrate that the boric acid makeup system can produce with relief pressure in the volume control tank. The set pressure is equal to the design pressure of the volume control tank.

f. Volume Control Tank Gas Supply Relief Valve (V2105)

The relief valve is sized to exceed the combined maximum capacity of the nitrogen and hydrogen gas regulators. The set pressure is lower than the volume control tank design pressure.

g. Reactor Coolant Pump Controlled Bleedoff Header Relief Valve (V2199)

The relief valve at the reactor coolant pump controlled bleedoff header allows the controlled bleedoff flow to continue to the quench tank in the event that a valve in the line to the volume control tank is closed. It does not serve as an overpressure protection function. The valve is sized to pass the flowrate required to assure closure of one excess flow check valve in the event of failure of the seals in one reactor coolant pump plus the normal bleedoff from the other reactor coolant pumps. The maximum relief valve opening pressure is less than the controlled bleedoff high-high pressure alarm setpoint.

h. Heat Traced Piping Relief Valves

Relief valves are provided for those portions of the boric acid system that are heat traced and which can be individually isolated. The set pressure is equal to the design pressure of the corresponding portion of the CVCS piping. Each valve is sized to relieve the maximum fluid thermal expansion rate that would occur if maximum duplicate heat tracing power were inadvertently applied to the isolated line.

i. Charging Line Thermal Relief Valve (V2435)

The relief valve on the charging line downstream of the regenerative heat exchanger is sized to relieve the maximum fluid thermal expansion rate that occurs if hot letdown flow continued after charging flow has stopped by closing the charging line distribution valves with both auxiliary spray valves shut. The valve is a spring loaded check valve.

9.3.4.3.3 Isolation of System

The letdown line and the reactor coolant pump controlled bleedoff line penetrate the reactor containment with flow in the outward direction. The letdown line contains three pneumatically operated valves, two inside the containment and one outside the containment. The two pneumatically operated valves inside containment are automatically closed on a SIAS. One of the pneumatically operated valves inside containment and the pneumatically operated valve outside containment in the letdown line are automatically closed on a CIAS. The controlled bleedoff line contains a pneumatically operated valve outside and a pneumatically operated valve inside the containment, which close automatically on a CIAS. Refer to Subsection 6.2.4 for a description of containment isolation provisions.

The charging pump discharge line carries flow into the containment. Within the containment this line branches into three lines. Two lines direct charging flow to reactor coolant loops 2A2 and 2B1, and the third line diverts flow as auxiliary spray to the pressurizer during a plant shutdown. All these lines are provided with check valves that preclude back flow from the reactor coolant loop. Each line to the reactor coolant loop has a normally open, fail open solenoid operated isolation valve. The solenoid operated isolation valves for auxiliary spray are normally locked closed and fail close. A fail-open pneumatic operated valve is provided on the charging line just outside the containment. This valve remains open upon actuation of CIAS to allow a path for makeup and boron injection, if necessary.

9.3.4.3.4 Leakage Detection and Control

The components in the CVCS are provided with welded connections wherever possible to minimize leakage to the atmosphere. However, flanged connections are provided on all pump suction and discharge lines, on relief valve inlet and outlet connections, on the volume control tank spray nozzle, and on the flowmeters to permit removal for maintenance. Most valves larger than two inches and all remote-operated valves are provided with double-packing, lantern rings, and leakoff connections, unless the valves are diaphragm (pack-less) valves. Actuator operated valves may also have the EPRI recommended five ring packing stack-up, with capped leakoff connections, installed to control valve stem leakage. The five ring packing stack up was previously reviewed and approved under PC/M 033-990D. Activity release due to valve leakage is minimized. Leakage from CVCS valves inside containment is monitored by the Reactor Coolant System Leakage Detection System described in Subsection 5.2.5.

The CVCS can also monitor the total Reactor Coolant System water inventory. If there is no leakage throughout the plant, the level in the volume control tank should remain constant during steady state operation. Therefore, a decreasing level in the volume control tank alerts the operator to a possible leak somewhere in the system.

9.3.4.3.5 Natural Phenomena

The CVCS components are located in the Reactor Auxiliary Building and the Reactor Building and, therefore, are not subject to the natural pheomena described in Chapter 3 other than seismic which is discussed in Section 3.7.

The CVCS is protected against the dynamic effects of pipe rupture as described in Section 3.6 and protected against internally and externally generated missiles as described in Section 3.5.

An additional makeup supply available for post-tornado shutdown is discussed in Subsection 9.3.4.3.1.3.5.

The likelihood of RAB ambient temperature remaining below 55°F for extended periods is low. However, the controls for the function of the BAMT heaters are set to maintain tank temperature. One set of heaters for each BAMT will be controlled by BAMT solution temperature. The heaters will be energized if the temperature falls to 60°F and they will shut off when the solution temperature rises to 70°F.

9.3.4.3.6 Radiological Evaluation

The CVCS is designed to limit radioactive releases to the environment to allowable limits for both normal operation and accident conditions. During normal operation, reactor coolant is diverted through the CVCS. As the reactor coolant passes through the CVCS purification line, the temperature of the fluid is reduced. The reactor coolant passes through the purification ion exchangers and the concentration of solid corrosion products and selected soluble isotopes is reduced. Reactor coolant is then normally returned to the Reactor Coolant System via the charging pumps. However, diversion of the letdown flow to the Waste Management System is performed when changes in reactor coolant inventory or boron concentration are necessitated by startups, shutdown, fuel depletion, etc., or on the high volume control tank liquid level. A further discussion of this diversion to the Waste Management System is presented in Section 11.2. All CVCS equipment drains, vents, leakage, valve stem leakoffs, and relief valve discharges are routed to the Waste Management System. Sources containing fission gases, such as the volume control tank, have provisions for venting to the Waste Management System for storage and decay (see Section 11.3 for a further description).

Since the CVCS letdown line penetrates the containment, it becomes isolated at the containment wall during accident conditions. Radioactive releases to the environment become negligible as sufficient isolation and containment shielding exists to provide the necessary boundary for retaining the radiation.

9.3.4.3.7 Failure Mode and Effects Analysis

Table 9.3-9 shows a failure mode and effects analysis for the CVCS. At least one failure is postulated for each safety related component of the CVCS. Various component leaks and breaks are discussed in Appendix 3.6A and 3.6B. In each case the possible cause of such a failure is presented as well as the local effects, detection methods and compensating provisions. (Note: Table 9.3-9 has been revised in response to PSL-ENG-SENS-98-094. See Section 11.5.2.2.2).

9.3.4.3.8 Applicable General Design Criteria and Regulatory Guides

Conformance with General Design Criteria applicable to the CVCS is discussed in Section 3.1. Conformance with recommendation of Regulatory Guides applicable to the components, piping, instrumentation and controls of the CVCS is discussed in Section 3.2.

9.3.4.4 CVCS Reliability

A high degree of functional reliability is assured by providing standby components and by assuring fail-safe responses to the most probable modes of failure. Redundancy is provided as follows:

Component	Redundancy
Purification and deborating IX	Three identical components
Filtration	Resin beds and filter in series
Charging pumps	One standby, two operating pumps
Charging line isolation valve	One parallel redundant valve
Auxiliary spray isolation valve	One parallel redundant valve
Letdown control valve	One parallel standby valve
Letdown backpressure control valve	One parallel standby valve
Boric acid makeup pump	One parallel standby pump
Boric acid makeup tank	One standby tank
Refueling water tank	None

In addition to the component redundancy it is possible to operate the CVCS in a manner such that some components are bypassed. While the normal charging path is through the regenerative heat exchanger, it is also possible to charge through the high pressure safety injection header. It is possible to transfer boric acid to the charging pump suction header by bypassing the volume control tank or by bypassing the makeup flow controls and the volume control tank.

The purification filter and purification and deborating ion exchangers can be bypassed. Controlled bleedoff flow from the reactor coolant pump seals can be routed to the quench tank rather than the volume control tank via the reactor coolant pump controlled bleedoff header relief valve.

If the letdown temperature exceeds the maximum operating temperature of the resin in the ion exchangers, the flow automatically bypasses the ion exchangers, and the process radiation monitor. The bypass action is initiated when the letdown temperature reaches 140°F.

Frequently used, manually operated valves located in high radiation or inaccessible areas are provided with extension stem handwheels terminating in low radiation and accessible control areas. Manually operated valves are provided with locking provisions if unauthorized operation of the valve is considered a potential hazard to plant operation or personnel safety.

The Refueling Water Tank is required to provide borated water as well as to provide inventory to makeup for coolant contraction. Maintaining the RWT volume and concentration in accordance with Technical Specifications are limiting conditions for plant operation. This borated water can be injected into the RCS by redundant means with either the charging pumps or the HPSI pumps.

9.3.4.5 Inspection and Testing Requirements

Each component was inspected and cleaned prior to installation into the CVCS. A high velocity flush using inhibited water was used to flush particulate material and other potential contamination from all lines to this system.

Instruments were calibrated during preoperational testing. Automatic controls were tested for actuation at the proper setpoints and alarm functions were checked for operability and proper setpoints. The relief valve settings were checked and adjusted as required. All sections of the CVCS were operated and tested initially with regard to flow paths, flow capacity, and mechanical operability. Pumps were tested to demonstrate head capacity.

Prior to preoperational testing, the components of the CVCS were tested for operability.

The charging pumps permit leak testing of the Reactor Coolant System during plant startup operations. Connections are provided to install a hydrostatic test pump in parallel with the charging pumps.

A charging pump was periodically used to check the operability of the check valves that isolate the Reactor Coolant System from the Safety Injection System.

The CVCS was tested for integrated operation with the Reactor Coolant system during hot functional testing. Heat exchanger performance and proper control of letdown flow and charging pumps by the pressurizer level control program were tested during hot functional testing. The charging line was checked to assure that the piping is free of excessive vibration. Response of the makeup portion of the CVCS to the automatic, dilute, manual and borate modes was verified. Any defects in operation that could affect plant safety were corrected before fuel loading.

As part of normal plant operation, tests, inspections, data tabulation, and instrument calibrations are made to evaluate the condition and performance of the CVCS equipment and

instrumentation. Data are taken periodically during normal plant operation to confirm heat transfer capabilities and purification efficiency. Pump and valve leakage are monitored.

Preoperational and functional testing are discussed in Section 14.0 and the Technical Specifications, respectively.

Provisions are made which permit the inservice testing of ASME Code Class 1, 2, or 3 components in accordance with ASME Section XI, (see Subsection 3.9.6).

9.3.4.6 Instrumentation Requirements

9.3.4.6.1 Temperature Instrumentation

a. Boric Acid Batching Tank Temperature

   The boric acid batching tank temperature measurement channel controls the boric acid batching tank heaters. Local indication is provided to facilitate batching operations.

b. Letdown Line Temperature

   The regenerative heat exchanger letdown outlet temperature is indicated in the control room and outside containment. An alarm is provided at the Reactor Turbine Generator Board (RTGB) in the control room to alert the operator to abnormally high letdown temperature. The instrument provides a signal for closing of the letdown stop valve inside containment at a setpoint above the high-temperature alarm. The valve controller switch must be manually reset before the valve can be opened to restore letdown flow.

c. Letdown Heat Exchanger Outlet Temperature

   This channel is used to control the component cooling water flow through the letdown heat exchanger to maintain the proper letdown temperature for purification system operation. Temperature is indicated in the control room at the RTGB and at the Hot Shutdown Control panel. A temperature deviation alarm is provided to alert the operator to temperature excursions that might result in unplanned boration changes via the ion exchangers.

d. Ion Exchanger Inlet Temperature

   This channel actuates isolation valves to bypass flow around the ion exchanger and stops flow to the process radiation monitor if the letdown temperature exceeds the highest permissible ion exchanger operating temperature. Temperature indication and high-temperature alarm are provided in the control room at the RTGB. Flow to the ion exchangers and process radiation monitor must be manually restored when the temperature decreases below the setpoint.

e. Volume Control Tank Temperature

   The volume control tank is provided with temperature indication in the control room. A high-temperature alarm is provided at the RTGB in the control room to

alert the operator to abnormally high water temperature in the volume control tank.

f. Boric Acid Makeup Tank Temperature

Each boric acid makeup tank is provided with redundant non-IE temperature measurement channels with local indication. A common high and low alarm provides annunciation in the control room. One measurement channel controls one of the two heater banks which are clamped onto the boric acid makeup tank to turn on if the solution temperature falls to 60°F to prevent precipitation of the stored boric acid and monitors for high and low temperature. The heaters will turn off at 70°F. The other channel monitors the tank for high temperature. The boron concentration will be low enough to preclude boron precipitation at the ambient temperature of the Auxiliary Building, thus eliminating the need for heat tracing for most of the boric acid system. The auxiliary building temperature is monitored by a local temperature indicator.

g. Charging Line Temperature

The regenerative heat exchanger charging outlet temperature is indicated at the RTGB in the control room, This indication is used to monitor heat exchanger performance and verify that auxiliary spray initiation conditions are satisfied.

9.3.4.6.2 Pressure Instrumentation

a. Letdown Backpressure Controller

The pressure measurement channel upstream of the letdown back-pressure control valves controls these valves to maintain the proper intermediate letdown pressure. The pressure is indicated and can be controlled at the Reactor Turbine Generator Board in the control room. High- and low-pressure alarms are also provided in the control room.

b. Ion Exchanger and Letdown Strainer Differential Pressures

Differential pressure indicators are provided to indicate the pressure loss across each ion exchanger and across the letdown strainer. The strainer differential pressure indicator has a local readout with a control room high differential pressure alarm. The ion exchanger differential pressure indicators are indicated locally,

Periodic readings of these instruments indicates any progressive loading of the units.

c. Boric Acid Makeup Pump Discharge Pressures

Discharge pressure of each boric acid makeup pump is indicated locally. A low pressure alarm annunciated in the control room is provided for both measurement channels.

d. Charging Line Pressure

The charging line pressure has an indicator at the RTGB and a low-pressure alarm in the control room. A low charging line pressure alarm during normal operation is indicative of a charging line failure or a charging pump malfunction.

e. Reactor Coolant Pump Controlled Bleedoff Head Pressure

A pressure measurement channel is provided to measure the pressure at the reactor coolant pump controlled bleedoff header. Indication is provided in the control room and the measuring device has over-pressure protection for Reactor Coolant System design pressure. A high alarm and a high-high alarm are annunciated in the control room. The high alarm indicates that a valve in the line to the volume control is closed. The high-high alarm indicates that the controlled bleedoff flow (to the volume control tank or quench tank) is stopped.

f. Charging Pump Suction Line Pressure

Suction pressure to each charging pump is indicated locally. This indication, in conjuction with the charging pump discharge pressure indication serves as a measure of the pump's performance.

g. Charging Pump Suction Line Pressure Switches

A pressure switch on each charging pump suction manifold stops the associated charging pump on low suction line pressure thus preventing damage of the charging pump due to cavitation.

h. Volume Control Tank Pressure

The volume control tank pressure is indicated in the control room. High and low-pressure alarms are also provided in the control room. A high-pressure alarm indicates either:

1) The automatic controls for the volume control tank inlet valve failed when the volume control tank level was increasing due to excessive letdown or;

2) The automatic controls for stopping the boric acid makeup pumps failed when the volume control tank level was increasing via automatic makeup or;

3) That the operator is filling the volume control tank in the manual makeup mode and did not stop at the high-level indication or;

4) The hydrogen gas regulator valve setting is incorrectly adjusted or failed.

A low-pressure alarm indicates a failure or improper setting to either the supply or vent gas regulator valve.

i. Charging Pump Lubricating Oil Pressure

The lubricating oil pressure for each charging pump oil lubrication system is indicated locally.

j. Charging Pump Lubricating Oil Low-Pressure Switch

A pressure switch on each charging pump oil lubrication system precludes the operation of the associated charging pump on low oil pressure preventing damage to the charging pump bearings.

k. Purification Filter Differential Pressure

Differential pressure indicators are provided to indicate the pressure drop across each of the purification filters. The channel has a local readout with a control room high differential pressure alarm.

l. Boric Acid Strainer Differential Pressure

A differential pressure measurement channel is provided to indicate the pressure loss across the boric acid strainer. The strainer differential pressure indicator has a local readout.

m. Regenerative Heat Exchanger Differential Pressure Switch

A differential pressure switch is provided across the regenerative heat exchanger. It senses high delta pressure across the heat exchanger during high flow. The high flow condition is caused by a rupture of the non-seismic letdown line outside containment. On high delta pressure, isolation valve V2516 is automatically closed to isolate letdown.

9.3.4.6.3 Level Instrumentation

a. Volume Control Tank Water Level

One differential pressure-type level instrument provides volume control tank water level indication at the RTGB in the control room and controls the starting and stopping of the automatic makeup system. This channel also provides a high-level alarm in the control room which is set above the level at which the volume control tank inlet valve diversion to the Waste Management System would normally occur and a low-level alarm in the control room set below the level at which automatic makeup would normally occur.

b. Volume Control Tank Water Level

A second differential pressure-type level instrument on the volume control tank automatically diverts letdown flow to the Waste Management System on high level and switches charging pump suction from the volume control tank to the refueling water tank and actuates a low-low level alarm in the control room.

c. Boric Acid Makeup Tank Water Level

Each boric acid makeup tank is provided with a single bubbler-type level measurement channel with two readout indications. One readout indication is located in the control room while the other indication is locally located. High, low and low-low alarms are provided in the control room to alert the operator of abnormal boric acid levels within the boric acid makeup tank. The low alarm setpoint has been reset to a value consistent with the operating requirements generated by the reduced boric acid concentration in the tank. A select switch

has been added in the control room which defeats the low alarm of the boric acid makeup tank that is not selected and is not being used by operations to meet Technical Specification requirements.

d. Charging Pump Packing Cooling Tank Water Level

Level indication is provided locally at the charging pump packing cooling tank.

e. Charging Pump Packing Cooling Tank Water Level Switch

The automatic seal water tank fill feature has been deleted.

f. Charging Pump Lubricating Oil Level

A sight glass is provided on each charging pump in order to monitor the oil level within the pump's crankcase.

g. Gas Accumulation Level

As part of the Gas Accumulation Management Program, the CVCS Charging Subsystem is provided with the capability to collect, indicate and vent gas that could be potentially transported to the suction side of the charging pumps. Sufficient gas collection volume is provided to ensure that gas binding of the charging pumps will not occur during a small break LOCA design basis accident. Gas collection standpipes, gas level indicators and vents are located upstream of the charging pumps, and gas level indicators and vents are located on the charging pump suction stabilizers. Periodic checks of the gas level indicator will determine when venting is required. A manual isolation valve between each gas collection standpipe/suction stabilizer and its associated gas level indicator allows for maintenance of the indicator without taking the Charging Subsystem out of service.

9.3.4.6.4 Flow Instrumentation

a. Letdown Flow

An orifice-type flow meter indicates letdown flow rate. This channel indicates and actuates a high-flow alarm in the control room.

b. Boronometer Flow (Note: the boronometer is no longer used. The rotameter was abandoned in place and the low flow alarm was removed by PC/M 03091.)

A rotameter located downstream of the boronometer is used when adjusting the flow rate through this unit. The channel indicates locally and a low flow alarm is annunciated in the control room.

c. Concentrated Boric Acid Flow

A flow meter measures the concentrated boric acid flow rate to the blending tee. A flow controller controls the boric acid control valve to obtain a preset flowrate. High and low flow alarms in the control room are delayed after initiation of the makeup signal to allow the set flowrate to become established. The flow is

recorded and the total quantity is indicated at the Reactor Turbine Generator Board. In the borate mode or blend mode of makeup controller operation, a preset batch quantity of boric acid can be added to the Reactor Coolant System.

d. Primary Water Flow

A flow meter measures primary water flow rate to the blending tee. A flow controller controls the primary water control valve to obtain a preset flow rate. High and low flow alarms at the Reactor Turbine Generator Board are delayed to allow the set flowrate to become established. The flow is recorded and the total quantity is indicated at the Reactor Turbine Generator Board. In the dilute mode or blend mode of operation, a preset batch quantity of primary water can be added to the Reactor Coolant System.

e. Charging Flow

Charging flow rate indication is provided in the control room at the Reactor Turbine Generator Board. An alarm for the low flow is provided in the control room and is indicative of a charging pump malfunction or charging line break.

9.3.4.6.5 Boron Measurement Instrumentation

Boron monitoring is attained by local and remote wet chemistry samples.

9.3.4.6.6 Radiation Monitoring Instrumentation (Note: This monitor is no longer used.)

The process radiation monitor provides a continuous recording in the control room of reactor coolant gross gamma radiation and specific fission product gamma activity thus providing a measure of fuel cladding integrity. A high alarm is annunciated in the control room. For more details, see the description in Subsection 9.3.4.2.2, item o.

9.3.5 ESF LEAKAGE COLLECTION AND RETURN SYSTEM

9.3.5.1 Design Basis

The ESF Leakage Collection and Return System is designed to

a. Collect leakage from all ESF system components and return it to the containment, and

b. Eliminate need for liquid waste system during a high activity release accident.

The system is non-safety and non-seismic except for the containment penetrations including the containment isolation valves which are designed to Quality Group B and seismic Category I requirements.

9.3.5.2 System Description

To prevent radioactive contaminants from entering the Liquid Waste Management System (LWMS), the ESF Leakage Collection and Return System (see Figure 9.3-6) isolates the equipment drain tank. In the event of a CIAS an operator from the control room can realign the system to divert radioactive leakage back into containment. This is done by closing valve

SE-06-1 and opening LCV-07-11A and 11B. Should the CIAS/SIAS setpoint not be reached, an operator would be alerted to high radiation in the ECCS room by the area radiation monitors.

Equipment design data is provided in Table 9.3-10.

The valve control switches and indicating lights are mounted in the control room.

9.3.5.3 Safety Evaluation

The ESF Leakage Collection and Return System, except for the containment penetrations, is designed to non-safety and non-seismic requirements, since this system is not required to safely shutdown the reactor or mitigate the consequences of an accident. The containment penetrations and isolation valves which provide containment integrity are designed to Quality Group B and seismic Category I requirements.

The injection phase of ECCS operation lasts for a minimum of 20 minutes, (see Subsection 6.2.2.2.1) during which time the non-radioactive water from the refueling water tank is injected into the Reactor Coolant System and containment. The ECCS room sumps would only collect radioactive water during the recirculation and shutdown cooling phase of ECCS operation. Hence after an accident the operators have at least 20 minutes available to close valve SE-06-1 by manual operation from control room and isolate the equipment drain tank.

9.3.6 POST-ACCIDENT SAMPLING SYSTEM

According to Technical Specification Amendment No. 114, the requirements to have and maintain the PASS have been eliminated. The information in this section is kept only for historical purposes.

The Post-Accident Sampling System (PASS) consists of a shielded skid-mounted sample station, a remotely located control panel, and a remote dissolved oxygen indicating panel. The PASS provides a means to obtain and analyze reactor coolant samples and containment building samples.

The Piping and Instrumentation diagrams for the PASS are shown on Figures 9.3-3a, 9.3-3b, and 9.3-6a. Design data are provided in Tables 9.3-10a, 9.3-10b and 9.3-10c.

9.3.6.1 Design Bases

The PASS is designed in accordance with the criteria stated in Section II.B.3 of Enclosure 3 to NUREG-0737. Combustion Engineering Owners Group issued in September 1993 the NRC approved Topical Report (CEN-415 Revision 1-A "Modification of Post Accident Sampling System Requirements" (Reference 7)). This report approved by the NRC on April 12, 1993, allows the deletion of sampling requirements for containment sump pH and dissolved oxygen in reactor coolant samples. The report also approved deleting the requirement for heat tracing of sample lines and containment hydrogen analysis. Heat tracing of containment atmosphere sample lines is not required if the Core Damage Assessment procedure bases the assessment on noble gas concentration in lieu of iodines. Some components which are no longer required by the design, including heat tracing and instruments, remain in place, but will not be maintained as required equipment. The quantitative design criteria for the PASS are as follows:

a. The PASS provides a means to promptly obtain a reactor coolant liquid, containment building sump liquid, and containment building gas samples. The combined time required for sampling and analysis is less than three hours.

b. The PASS allows for post-accident sampling with resulting personnel radiation exposure not exceeding the criteria of GDC 19 (Appendix A to 10CFR Part 50).

c. The PASS is capable of accommodating an initial reactor coolant radiochemistry spectrum corresponding to a postulated release equivalent to that assumed in Regulatory Guide 1.4, Assumptions Used for Evaluating the Potential Radiological Consequences of a Loss of Coolant Accident for Pressurized Water Reactors, Rev. 2 dated June, 1974, and Regulatory Guide 1.7, Control of Combustible Gas Concentrations in Containment Following a Loss of Coolant Accident, Rev. 2 dated November 1978.

d. The PASS provides a means to remotely quantify the concentrations of total dissolved gas, hydrogen and boron in the liquid samples.

e. Sample flow is returned to the containment to preclude unnecessary contamination of other auxiliary systems and to ensure that radioactive waste remains isolated within the containment.

f. Components and piping are designed to Quality Group D (as defined in Regulatory Guide 1.26) non-seismic requirements. The equipment is located downstream of double isolation valves from safety code systems.

9.3.6.2 System-Description

The requirements for post-accident sampling of the reactor coolant and containment building atmosphere are met through the Post-Accident Sampling System (PASS). The PASS provides a means to obtain reactor coolant samples and containment building atmosphere samples for analysis. A reactor coolant sample can be drawn directly from the Reactor Coolant System (RCS) whenever the RCS pressure is between 200 psig and 2485 psig. RCS sample lines are provided with orifices inside containment so as to limit the flow from any postulated break in the sample line. At pressures below 200 psig, reactor coolant samples can be drawn from a Safeguards System sample line. This pathway also provides a means of sampling the containment building sump during the recirculation mode of Safeguards System operation. A containment building atmosphere sample can be drawn with containment building pressure between 10 psia and 75 psia. All sample flow is returned to the containment building under post-accident conditions to preclude unnecessary contamination of other auxiliary systems and to ensure that high level waste remains isolated within the containment. These sample process pathways were selected to insure a representative sample under all modes of decay heat removal. The PASS sampling flow rates are provided in Table 9.3-10a.

The PASS consists of a remotely located control panel, and a skid-mounted sample station which are designed to maintain radiation exposures to plant personnel as low as reasonably achievable (ALARA) and which are located to minimize the length of sample lines. The PASS is interfaced with the existing reactor coolant and safeguards system sample lines. Post-accident sampling does not require an isolated auxiliary system to be placed in operation.

The PASS is a totally closed system (i.e., samples taken from containment are returned to the containment). In addition, the air flow to the PASS sample station skid is from the surrounding room into the PASS skid and to the PASS ventilation system exhaust. The exhaust air is directed through an activated charcoal filter for iodine removal.

The PASS provides the capability for remote chemical analyses of the reactor coolant including total dissolved gas concentration, dissolved hydrogen concentration and boron concentration. Reactor coolant analysis is provided through the use of an undiluted grab sample facility. Shielded grab samples of the depressurized undiluted reactor coolant liquid may be obtained. Unshielded, depressurized and diluted grab samples of the degassed reactor coolant liquid, reactor coolant dissolved gas and containment building atmosphere may also be obtained.

The operation of the PASS for collecting and analyzing reactor coolant and containment building atmosphere samples may be categorized as (1) reactor coolant sample purging, (2) reactor coolant sample analyses and (3) dilution, (4) undiluted liquid grab sample collection, (5) containment building atmosphere sample purging and dilution, and (6) system flushing. An operation description for these categories is provided below:

Reactor coolant sample purging is accomplished by directing the sample flow through the system isolation valves, the sample vessel/heat exchanger, the pressure reducing throttle valve, and out to the reactor cavity sump. At reactor coolant pressures of less than 200 psig the containment sump sample flow is purged in the same manner using the safeguards pump discharge connection.

Two methods are available to measure reactor coolant dissolved hydrogen. The Whittaker on-line instrumentation measures hydrogen concentration as samples are measured for boron analysis or diluted isotopic analysis.

Reactor coolant total gas analysis is performed on a pressurized sample which is collected by isolating the sample vessel/heat exchanger. Total dissolved gas concentration is determined by degassing the sample. This is accomplished by depressurization and circulation by alternate operation of the burette isolation valve and the sample circulation pump. The resulting displacement of liquid into the burette is used to calculate the dissolved gas concentration. The collected gases, which have been stripped from the liquid, are then directed through a float valve for moisture separation na circulated through hydrogen and oxygen analyzers. After recording the hydrogen and oxygen gas concentrations, the gas sample vessel, which contains nitrogen, may be placed on line to dilute gas volume. This dilution operation reduces the radiation levels such that local samples can be drawn from the gas sample vessel, if desired. Prior to sample withdrawal, additional dilution, which may be necessary for this quantification, may be performed by further nitrogen addition, circulation and venting.

Reactor coolant liquid analyses are accomplished by reinitiating and directing the sample flow through the in-line chemistry analysis equipment. The gas residence chamber and float valve downstream of the throttle valve allows for automatic venting of gases coming out of solution. This venting is required in order to prevent gas bubble interference with flow rate and chemistry measurements in the downstream instrumentation. Boron readings are obtained from the in-line instrumentation. A small fixed volume of depressurized liquid sample (collected in a four-way valve) is then drained to the depressurized liquid sample vessel and diluted. The diluted sample ca be withdrawn into a sample container for analysis.

An undiluted liquid grab sample for chloride analysis can by collected by directing reactor coolant purge flow though the undiluted depressurized liquid sample vessel. This vessel is provided with a lead shielded container and cart for transfer of sample to the analysis location. The isolation valves for the vessel are provided with stem extensions penetrating the shielding.

In accordance with item II.B.3 of NUREG-0737 (pg. 3-67, item 4) PASS has the capability to monitor total dissolved gases and H_2 concentration.

Containment building atmosphere sampling is initiated by opening the containment isolation valves and by using the containment sample pump to purge the air sample through the system. Purge flow is directed back to containment. The containment sample vessel, which contains nitrogen, may be placed on line to dilute the sample to levels acceptable for withdrawal. A containment air sample may then be withdrawn from the containment sample vessel.

System flushing of the liquid and gaseous portions is accomplished by purging with demineralized water and nitrogen, respectively, to reduce personnel exposure during withdrawal of the diluted samples and to reduce contamination plateout between samples.

Radionuclide analyses are performed on grab samples. These samples are counted in standard radionuclide counting equipment. Grab sample techniques are utilized for backup analyses. Containment hydrogen analyzers are described in Subsection 6.2.5.

Radiological analysis of PASS grab samples is used to identify the occurrence and type of core damage. Laboratory analysis of PASS grab samples using germanium detectors and multichannel analysis are employed to identify the presence of selected radioisotopes which are indicative or the various kinds of core damage. Core damage is categorized according to clad failure, fuel overheat, and fuel melt. The analysis takes into account the core burnup, coolant water volume, and coolant temperature corrections.

9.3.6.3 Component Description

The major PASS components are described in this section. The principal component data summary including design code is provided in Table 9.3-10b.

a. Sample Station

   The air flow to the PASS sample station skid is from the surrounding room into the PASS skid and to the PASS ventilation system exhaust.

   The sample station is a free-standing skid-mounted enclosure. The enclosure contains the piping, valves, components and instrumentation necessary to provide the sampling and analysis capability. The enclosure is ventilated from the surrounding room to the ventilation system suction connection in the upper portion of the enclosure. This air flow precludes any possible buildup of radioactive or hydrogen gas and provides for removal of heat generated by internal components.

b. Sample Circulation Pump

   The sample circulation pump is a peristaltic type positive displacement pump. This pump is capable of pumping liquids and/or gases. The pump will be used in the total gas, hydrogen, and oxygen gas analyses operations to strip the gases

out of solution in the sample fluid and circulate them through the hydrogen and oxygen analyzers.

c. Surge Vessel Pump

The surge vessel pump is a progressing cavity (helical) pump. The pump is used to pump down the surge vessel contents to the containment building.

d. Containment Sample Pump

The containment sample pump is a vacuum pump/compressor unit that operates as a positive displacement compressor using a stainless steel diaphragm. The pump is used to collect a containment atmosphere sample and to dilute the sample via circulation through the containment sample vessel.

e. Gas Sample Vessel

The gas sample vessel is a 12,000 ml sample vessel initially filled with nitrogen gas. The vessel supplies the gas analysis loop with nitrogen gas to dilute the radioactive gases present in the sample line. The vessel is equipped with a septum plug which allows the operator to withdraw diluted gaseous sample with a syringe for radiological analysis.

f. Depressurized Liquid Sample Vessel

The depressurized liquid sample vessel is a 12,000 ml sample vessel. This vessel collects a liquid sample trapped in the four-way valve located above the sample vessel. The vessel is partially filled with demineralized water before the sample is drained into the vessel. Additional demineralized water is then added to obtain the proper dilution factor so that a liquid sample can be withdrawn for radiological analysis.

g. Containment Sample Vessel

The containment sample vessel is a 12,000 mi sample vessel that is initially filled with nitrogen gas. The containment sample pump draws a sample from containment and circulates it through the sample vessel where the nitrogen gas dilutes the sample so that it can be withdrawn for radiological analysis. The vessel is equipped with a septum plug for sample withdrawal.

h. Surge Vessel

The surge vessel has a 10 gallon capacity and serves as a vent and drain tank for the depressurized liquid sample vessel and the total gas analysis burette.

i. Sample Vessel/Heat Exchanger

The sample vessel/heat exchanger is a vertically mounted, shell and tube type heat exchanger. The heat exchanger uses component cooling water to cool the reactor coolant sample flow from a maximum RCS temperature of 650 to 120 F to allow low temperature sample analysis. The tube side of the heat exchanger serves as a sample vessel for collection of a pressurized reactor coolant sample.

j. Stainless Steel Burette

The stainless steel burette has a 1,000 ml capacity. The burette is used to determine the amount of total gas present in the sample fluid by measuring a difference in the fluid level of the burette upon degasification of the pressurized reactor coolant sample.

k. Strainer

The strainer is designed to remove insoluble particles which may cause sample station chemistry instrumentation to become plugged. The strainer can be backflushed with demineralized water remotely by operation of valves at the control panel.

l. Grab Sample Facility

The grab sample facility is designed to obtain a 75 cc undiluted sample of reactor coolant liquid. The facility consisted of a lead shielded sample vessel and valves mounted on a cart for transport within the plant. The facility is manually operated.

m. Gas Residence Chamber

The gas residence chamber is a horizontally mounted lead shielded baffled cylindrical vessel. The chamber is used to remove undissolved gases from reactor coolant samples to prevent interference with the in-line process monitors.

n. Charcoal Exhaust Filter

The charcoal filter is designed to remove radioactive iodine and particulate material from the enclosure ventilation exhaust. The filter is mounted in a separate housing located on top of the sample skid enclosure.

9.3.6.4 Instrumentation and Control Description

The major PASS instruments and controls are described in this section. The on-line process monitor data is provided in Table 9.3-10c. The post accident sampling panel will be powered from a non-safety AB power panel pp-234 which is capable of being powered from the diesel generator in the event of a loss of offsite power. The electrical cables associated with the post accident sampling panel and associated instruments will be routed in accordance with Reg. Guide 1.75, Physical Independence of Electrical System (Rev. 1).

a. Control Panel

The panel is designed to meet NEMA-12 requirements. All sample system non-code isolation valves and pumps are controlled from this panel. indication of all process parameters and chemistry readouts are displayed on the panel. To facilitate system and operability all controls and indications are arranged in a mimic of the system. All process pumps and valves are equipped with hand switches at the control panel.

b. Heat Tracing (Note 1)

The containment building atmosphere sample tubing is heat traced to limit plateout of radioiodine and condensation of containment atmosphere vapor, The heat tracing ensures a representative sample.

The tubing lines to be heat traced have both a primary and redundant heater cable, each of which are 100 percent capacity heaters and are physically and electrically independent. The heat tracing circuits are energized through the non-safety related Water Management Heat Trace Control Panels 2A and 2B. If the PASS is required during an accident, concurrent with a loss of offsite power, these control panels are manually loaded onto the diesel generators.

c. Boron Meter

The Boron Meter is a specific gravity measuring device which determines and remotely indicates the concentration of boron present in the liquid sample.

d. Hydrogen Analyzer

The hydrogen analyzer, for the gas stripped from the depressurized reactor coolant sample, is a thermal conductivity device that determines and remotely indicates the volume percent of hydrogen.

e. Oxygen Analyzer

The oxygen analyzer is a paramagnetic device that determines and remotely indicates the volume percent of oxygen in the gas stripped from the reactor coolant.

f. Dissolved Hydrogen Analyzer

The dissolved hydrogen analyzer utilizes an electrochemical sensor to measure the hydrogen partial pressure in the reactor liquid coolant sample. A millivolt signal is transmitted to a remotely located indicator, on the PASS Control Panel, which amplifies and converts this signal to indicate the concentration of dissolved hydrogen in cc H_2 (STP) per kilogram of water.

Note 1 not required as per Topical Report CEN-415, Revision 1-A.

9.3.6.5 System Evaluation

The location of the post-accident reactor and containment atmosphere sampling system are in an area of relatively low post-accident background radiation. This ensures compliance with the personnel exposure limits of NUREG 0737 during sampling and analysis. Additional plant shielding along with selective routing of interconnecting piping to the existing sampling system ensures that (1) the exposure limits for personnel are not exceeded and (2) the onsite radiochemistry analysis equipment is available for post accident sample analyses. The sample station is also physically separated from safety-related equipment such that failure of the associated non-seismic equipment does not cause damage to the safety-related equipment such that failure of the associated non-seismic equipment does not cause damage to the safety-related equipment.

Sufficient shielding will be provided around the post-accident sampling system components to limit personnel exposure to the GDC-19 limits. Regulatory Guide 1.4 source terms will be used.

Cooling water to the Post Accident Sampling system is available during post-accident conditions to enable low temperature sample analyses. Overrides are also available to enable opening of containment isolation valves following a CIAS so that post-accident sampling can be accomplished. Control for the reactor coolant sampling system return containment isolation valve is provided in the control room. An interlock is provided to ensure that this valve and the containment sump isolation valve are open before the system inlet isolation valve is open.

As much as practicable, Post Accident Sampling System connecting piping is pitched downward at least 10 degrees to prevent settling or separation of solids contained by the sample. Traps and pockets in which condensate or crud may settle are avoided since they may be partially emptied with changes in flow condition and may result in sample contamination.

9.3.6.6 Testing and Inspection

The sample station skid and control panel are equipped with doors for testing and inspection during normal operations. Each component is tested and inspected prior to installation in the sample system. Instruments are calibrated during initial system installation. Automatic controls are tested for actuation at the proper setpoints. The system is operated and tested upon installation with regard to flow paths, flow capacity and mechanical operability.

The operability of Post-Accident Sampling System instrumentation, valves, and other components that are required to operate after an accident was demonstrated based on testing and engineering evaluations (Reference 5).

Periodic calibration is performed according to the schedule provided in Table 9.3-10d. The PASS is designed to function for six months under post-accident conditions without recalibration. System operability will be tested at a frequency minimum of six months. Such operability tests will check the functioning of all aspects of the system.

9.3.6.7 Operator Training

FP&L Chemistry Department technicians are trained both in the classroom and in actual hands-on operations, as a function of the Chemistry Department training program. Operating procedures are developed; they are consistent with the recommendations of the NSSS PASS supplier.

9.3.7 REACTOR COOLANT GAS VENT SYSTEM

9.3.7.1 Design Bases

9.3.7.1.1 Functional Requirements

The Reactor Coolant Gas Vent System (RCGVS) is designed to perform the following functions:

a. The primary function of the system is to allow for remote venting of the Reactor Coolant System (RCS) via the reactor vessel head vent or pressurizer steam space vent during post-accident situations when large quantities of non-condensible gases may collect in these high points.

b. As a secondary function, the system may be used in normal RCS venting procedures required for a plant outage.

9.3.7.1.2 Design Criteria

a. Flow Rate

The basic purpose of the vent system is to remove non-condensible gases (primarily hydrogen) from the RCS in a timely manner.

(1) The system is designed to vent non-condensable gas from the RCS in a reasonable period of time over a wide range of reactor coolant temperature and pressure conditions. Over the range of conditions considered (pressures from 250 psia to 2250 psia and temperatures from 200F to 700F) the system is designed to vent one-half of the RCS volume in one hour with the vented volume expressed in standard cubic feet of gas.

(2) At the upper end, flow through the vent system must be limited to avoid excessive mass loss from the Reactor Coolant System. By utilizing flow restricting orifices, the RCGVS is designed to:

a) Limit the coolant liquid loss through the vent to the makeup capacity. This limits the mass loss to below the definition of a LOCA in 10 CFR 50, Appendix A.

b) Limit the vent mass rate such that venting does not result in heat or mass loss from the RCS which would result in uncontrollable pressurizer pressure or level changes under emergency conditions. With 18 of 30 heaters available, the heat loss is within the heater capacity. EC291723

b. Controls

The vent system controls are designed to allow venting under accident conditions and minimize the potential for inadvertent operation.

1) The system permits remote (control room) venting from the reactor vessel head or the pressurizer.

2) The vent system is operable following all design basis events except those requiring evacuation of the control room.

3) Positive open/close control room position indication is provided for all solenoid operated valves. This indication is provided by reed switches which directly sense the valve stem position. The switches are environmentally qualified to the same requirements as the valves.

4) To minimize the possibility of inadvertent operation of the system, administrative controls on valve operation are provided.

5) The RCGVS is designed for a single active failure with active components powered from their respective redundant emergency power sources. Parallel vent paths with valves powered from alternate power sources are provided. The solenoid operated valves are powered from safety grade 125V dc power supplies.

c. Piping and Arrangement

1) The vent path is safety grade and meets the same qualifications as the RCS. Redundance in the vent path is provided and essential piping and components are seismic Category 1, Safety Class 2.

2) The system is designed not to interfere with refueling maintenance actions. System piping is flanged where required to facilitate removal of components that might interfere with refueling operation.

3) Vent paths are provided to both the quench tank and containment atmosphere. The quench tank path allows for cooling of gases and condensing water vapor by releasing the vented gases below the water level in the tank. The containment vent path terminates in the area where good air mixing and maximum cooling properties exist.

4) The vent system materials are designed to be compatible with superheated steam, steam/water mixtures, water, fission gases, helium, nitrogen, and hydrogen as high as 2500 psia and 700 F.

9.3.7.2 System Description

9.3.7.2.1 Summary

The system is designed to permit the operator to vent the reactor vessel head or pressurizer steam space from the control room under post-accident conditions, and is operable following all design basis events except those requiring evacuation of the control room. The vent path from either the pressurizer or reactor vessel head is single active failure proof with active components powered form emergency power sources. Parallel valves powered off alternate power sources are provided at both vent sources to assure a vent path exists in the event of a single failure of either a valve or the containment directly or to the quench tank. The quench tank route allows removal of the gas from the RCS without the need to release the highly radioactive fluid into containment levels. However, venting large quantities of gas to the quench tank will result in rupture of the quench tank rupture disc providing a second path to containment for vented gas.

Cooling of gas vented to the quench tank is provided by introducing the gas below the quench tank volume. The direct vent path is located to take advantage of mixing and cooling in the containment. The system is designed with a flow limiting orifice to limit flow such that the mass flow rate of reactor coolant system fluid out of the vent is less than the makeup capacity of a single coolant charging pump. this effectively limits the flow to less than the LOCA definition of 10 CFR 50, Appendix A. The vent rate limitation also assures that RCS pressure control is not compromised by venting operation. The system has the capability to vent large quantities of hydrogen gas from the RCS.

Although designed for accident conditions, the system may be used to aid in the pre or post-refueling venting of the Reactor Coolant System. Venting of the individual CEDMs and RCPs will still be necessary, however, pressurizer and reactor vessel venting can be accomplished with the system if desired. Vent flow can be directed to the quench tank or through a charcoal filter to the containment purge header for this operation to prevent inadvertent release of radioactive fluid to the containment.

As shown on Figure 5.1-4b non-condensible gases are removed from either the pressurizer or reactor vessel through the flow restricting orifice and one of the parallel isolation valves and delivered to the quench tank or containment via their isolation valves. Venting under accident conditions would be accomplished using only one source (reactor vessel or pressurizer) and one sink (quench tank or containment atmosphere) at a given time.

9.3.7.2.1.1 Normal Operation

This system is not intended for use during normal power operation and administrative controls are provided to minimize the possibility of inadvertent operation.

During normal operation, leakage detection is maintained by use of the pressure instrument. A rise in pressure will indicate leakage past any of the system isolation valves. Small leakage rates can be determined by conducting RCS leak rate calculations. Larger leakage rates can be determined by directing leakage to the quench tank and monitoring tank level change or to the accumulator and monitoring sump instrumentation.

9.3.7.2.1.2 Accident Operation

Operation of the RCGVS during accident conditions will vary depending on the rate of gas generation. For low gas generation rates, gas from within the reactor vessel or pressurizer is vented to the quench tank. Reactor and/or pressurizer vent valves are lined up and the gas released to the quench tank. Monitoring of quench tank pressure is necessary during this mode of operation. From this point the gas could be discharged to the gaseous waste management system if it is available for use.

For high gas generation rates, gases may be vented to the containment atmosphere. Should this valve fail, vent to containment atmosphere can still be accomplished through the quench tank rupture disc.

When venting to either the quench tank or containment, the system operating procedures will require that the operator open the pressurizer or reactor vessel solenoid valve which is powered from the alternate emergency bus (ie, two valves in series will be open, one powered from bus A, and the other from the bus B). This will allow termination of venting for the unlikely situation where one on the valves should electrically fail open.

The RCGVS will be operated as an on-off system to remove gas from the RCS. The volume of gas to be removed is determined by reactor vessel or pressurizer instrumentation and then the venting time is determined dependent upon this volume and system temperature and pressure.

9.3.7.2.2 Component Description

There no major components in the RCGVS. The entire system consists of piping, valves, and pipe fittings. All piping and valves are constructed of austenitic stainless steels and are Nuclear

Safety qualified according to the Class as indicated on Figure 5.1-4b. Piping system supports and valves are seismically qualified as shown on Figure 5.1-4b. Power operated valves are solenoid operated type designed to fail close to minimize inadvertent operation. The solenoid valves control circuitry and position indicator switches are class 1E qualified to IEEE 382-1972 for inside containment. Redundancy in valve arrangement and power supply is designed to meet the single failure criterion. Part of the piping system includes orifices at the pressurizer vent and reactor vessel bead vent, both sized to meet the flow requirements of the system design criteria.

9.3.7.3 Safety-Evaluation

9.3.7.3.1 Performance Requirements, Capabilities, and Reliabilities

The ability to vent the RCS - either reactor vessel or pressurizer - under accident conditions is assured by providing redundant flow paths from each venting source, redundant discharge paths, and emergency power to all power operated valves. A single active failure of either a power operated valve or power supply will not prevent venting to containment (either directly or through the quench tank dependent upon failure mode from either source.

9.3.7.3.2 Pipe break Analysis

Consistent with NRC requirements, the RCGVS is designed to limit mass loss to less than a LOCA as defined in 10 CFR 50, Appendix A and thus a separate analysis of inadvertent system operation or pipe breakage is not required to meet 10 CFR 50.46.

The pressure boundary of the normally pressurized portion of the head vent system is protected from the effects of postulated pipe breaks in the main loop cold leg piping, or branch lines to the cold legs, or non-RCPB piping. The pressure boundary of the normally unpressurized portion of the vent system is protected form the effects of postulated pipe breaks in non-RCPB lines for which venting would be required.

The flow function of the vent system is protected from the effects of failures for which venting would be required.

9.3.7.3.3 Leakage Detection

Leakage past the system isolation valves into the normally unpressurized portion of the system is detected by pressure instrumentation.

9.3.7.3.4 Natural Phenomena

RCGVS components are located in containment and, therefore, are not subject to the natural phenomena described in Chapter 3 other than seismic. Piping has been analyzed and supported in accordance with St. Lucie 2 seismic criteria. All valves have been analyzed and tested for operability during a seismic event by manufacturers. Table 9.3-11 provides a tabulation of seismic Category 1 valves whose operation is relied upon to mitigate the consequences of an accident.

9.3.7.3.5 Failure Modes and Effects Analysis

Table 9.3-12 shows a failure mode and effects analysis for the RCGVS. At least one failure is postulated for each safety-related component of the RCGVS. In each case the possible cause of such a failure is presented as well as the local effects, detection methods, and compensating provisions.

9.3.7.4 Inspection Testing Requirements

Each component is inspected and cleaned prior to installation into the RCGVS. The instrument will be calibrated during pre-operational testing. The valves and controls will be tested for operability following installation.

Component have been specified and purchased as seismic Category I and Nuclear Safety Class where required. Vendors have substantiated either through test, calculational and/or operational data that system components will remain operable under the design seismic loads. Vendors have tested and inspected all safety class equipment in accordance with applicable ASME and IEEE codes.

Operability testing of the system will be accomplished during refueling. The valves will be full-stroke exercised to demonstrate operability.

9.3.7.5 Instrumentation Requirements

The system is designed to be controlled remotely from the main control room. All power-operated valves powered from emergency power sources and alternate sources are used as necessary to meet single failure criteria. Position indication (open/shut) is provided for all remotely operated valves and displayed in the control room.

9.3.7.5.1 Pressure Instrumentation

Vent header pressure instrumentation is provided to monitor any valves leakage. Pressure indication is located in the control room.

SECTION 9.3: REFERENCES

1. Williams, W. L., Corrosion, 13539t, 1957.

2. Proceedings of Conference: Fundamental Aspects of Stress Corrosion Cracking, 1967.

3. Ward, C. T., Matthis, D. L. and Stachle, R. W., "Intergranular Attach of Sensitized Austenitic Stainless Steels by Water Containing Fluoride Ions, "Corrosion, NACE, Vol. 25, No. 9, September 1969.

4. Miller, D A, and Bryant, P. E. C., Corrosion and Coolant Chemistry Interactions in Pressurized Water Reactors, National Association of Corrosion Engineers Conference, March 1970.

5. "Engineering Evaluation and Functional Testing for the C-E PASS Components and Instrumentation", CEN-229(L)-P, Combustion Engineering, Inc., November 1982.

6. "Boric Acid Concentration Reduction Effort, "CEN-365(L), Combustion Engineering Inc., June 1988.

7. "Modification of Post Accident Sampling System Requirements," CEN-415, Revision 1-A, ABB Combustion Engineering Nuclear Power, September 1993.

8. FPL Evaluation PSL-ENG-SENS-00-013, Revision 4, Use of PRC-01 Resin to Remove Co-58 Contaminants, September 2005.

9. NRC Letter to FPL, dated March 27, 2001, “St. Lucie Units 1 and 2 Re: Issuance of Amendments Regarding Elimination of Requirements for Post-Accident Sampling Systems.”

10. FPL Evaluation PSL-ENG-SEMS-07-044, Revision 1, Use of Purolite NRW160 Resins

TABLE 9.3-1

DESIGN DATA FOR COMPRESSED AIR SYSTEM COMPONENTS

1. Instrument Air System Air Compressors

Quantity	4	
2 Compressors (2A,2B), Type,	2-Stage, Rotary Screw, oil free, water-cooled, enclosed in a sound insulated enclosure	EC283797
Design capacity, scfm each	163	
Discharge pressure, psig	107	
Motor	40 hp, 3-phase, 60 Hz, 460 V	
Enclosure	Totally enclosed, fan-cooled	
Codes	ASME Section VIII, NEMA	
2 Compressors (2C,2D), Type,	2-Stage, Rotary Screw, oil free, water-cooled, enclosed in a sound insulated enclosure	EC283797
Design capacity, scfm each	411	
Discharge pressure, psig	125	
Motor	100 HP, 3-phase, 60 Hz, 460 V	
Enclosure	Totally enclosed, fan cooled	
Codes	ASME Section VIII, NEMA	

EC283797

Air Receiver

Quantity	1
Type	Vertical
Design pressure, psig	135
Design Temperature, °F	125
Actual volume, ft^3	94
Code	ASME Section VIII

EC283797

Air Dryer

Quantity	2
Type	Heatless regeneration
Desiccant	Activated alumina
Capacity, scfm	400

TABLE 9.3-1 (Cont'd)

DESIGN DATA FOR COMPRESSED AIR SYSTEM COMPONENTS

1. Instrument Air System (Cont'd)

EC283797

Piping and Valves

Valves	150 lb ANSI for 2-1/2" and larger, 200 lb and 600 lb ANSI for 2" and smaller
Piping	Seamless ASTM A-106, Grade B (2-1/2" thru 6") ANSI B31.1

2. Station Air System

Air Receiver

Quantity	1
Type	Vertical
Design pressure psig	125
Actual volume, ft^3	151
Code	ASME Section VIII

Piping and Valves

Valves	150 lb ANSI for 2-1/2" and larger, 200 and 600 lb ANSI for 2" and smaller
Piping	Seamless ASTM A-106, Grade B (2-1/2" thru 6")
Codes	ANSI B31.1, ASME Section III, Class 2

TABLE 9.3-2
COMPRESSED AIR SYSTEM INSTRUMENT APPLICATION

System Parameter & Location	Indication Local	Indication Control Room	Alarm Local	Alarm Control Room	Tag Number/or Control Function	Instrument(1) Range	Normal Operating Range	Instrument(1) Accuracy	
Instrument Air System (Outside containment)									
Instrument Air Compressor									
1) Discharge temperature	*						112-115°F		EC283797
2) Discharge pressure	*						110-120 psig		
Instrument Air Receiver Pressure	*			HI/LO	PI-18-3 Air receiver pressure <105 psig starts standby compressor: Unit may be manually shutdown at pressure of 75 psig or less.		100-120 psig		EC283797 EC283797
Instrument Air Dryer									
1) Inlet pressure	*						100-120 psig		EC283797
2) Outlet pressure	*						90-120°F		
Instrument Air Discharge Hdr/Afterfilter Package		*			PI-18-9		105-120 psig		
Outlet Pressure	*			LO	PI-18-8 PS-18-7				

TABLE 9.3-2 (Cont'd)

System Parameter & Location	Indication Local	Indication Control Room	Alarm Local	Alarm Control Room	Tag Number/or Control Function	Instrument[1] Range	Normal Operating Range	Instrument[1] Accuracy
Station Air Receiver Pressure	*			HI/LO	PI-18-12		85-100 psig	
Discharge Station Air Header Pressure		*		LO	PI-18-16		90-100 psig	
Main Hatch Door Seal								
1) Hdr pressure	*			HI/LO	PI-18-41A&B PS-18-42A&B		25-30 psig	
2) Accumulator pressure	*				PI-18-40A&B		90-100 psig	

(1) Instrument ranges are selected in accordance with standard engineering practices. Instrument accuracies are selected such that existing instrument loop performance and safety analysis assumptions remain valid. Where applicable, instrument accuracies are also evaluated for their impact on setpoints in accordance with the FPL Setpoint Methodology.

TABLE 9.3-3

PRIMARY SAMPLING SYSTEM FLOW RATES

Source	Nominal Gpm
Pressurizer Steam Space	0.5
Pressurizer Surge Line	0.7
Reactor Coolant System Hot Leg 2A	0.8
Shutdown Cooling Suction Line	1.0
High-Pressure Safety Injection, Low-Pressure Safety Injection and Containment Spray Pumps Miniflow Line	1.0
CVCS Purification Filter 2A Inlet	1.0
CVCS Purification Filter 2A Outlet	1.0
CVCS Purification Filter 2B Outlet	1.0
CVCS Purification Ion Exchanger Series Flow Line	1.0
Safety Injection Tanks	1.0
Low-Pressure Safety Injection Pump Discharge	1.0

TABLE 9.3-4

DESIGN DATA FOR PRIMARY SAMPLING SYSTEM COMPONENTS

1.	Sample Heat Exchangers	
	Quantity	4
	Type	Heliflow
	Tube Side	
	Fluid	Reactor Coolant or Steam
	Design Pressure, Psig	2485
	Pressure Drop, psi at 1.5 gpm	100
	Material	Austentic stainless steel
	Design Temperature	700°F
	Shell Side	
	Fluid	Component Cooling Water
	Design Pressure, psig	150
	Pressure Drop, psi at 3.5 gpm	10
	Material	Carbon steel
	Design Temperature	200°F
	Code	ASME Section VIII 1974 Edition, Winter 1976 Addenda
2.	Sample Vessels	
	Quantity	2
	Internal Volume, cc	300
	Design Pressure, psig	2485
	Design Temperature, °F	250
	Normal Operating Pressure, psig	2100
	Normal Operating Temperature, °F	120
	Material	Stainless Steel (316)

TABLE 9.3-4 (Cont'd)

2. Sample Vessel (Cont'd)	
Fluid	Reactor Coolant
Code	Commercial
3. Relief Valves	
a. Relief Valve in Hot Leg Sample Line	(V5109)
Set Pressure, psig	100
Accumulation, %	10
Backpressure Buildup, psi	5
Superimposed Backpressure, psi	10
Capacity, gpm for Water at 100°F	8.0
Normal Fluid Temperature, °F	120
Maximum Fluid Temperature, °F	250
b. Relief Valve in Pressurizer Steam Sample Line	(V5124)
Set Pressure, psig,	100
Accumulation, %	10
Backpressure Buildup, psi	5
Superimposed Buildup, psi	10
Capacity, gpm for Water at 100 °F	8.0
Normal Fluid Temperature, °F	120
Maximum Fluid Temperature, °F	250
Code	Commercial
4. Hood Fan	
Type	Centrifugal
Motor Horsepower, hp	1/4

TABLE 9.3-4 (Cont'd)

4.	Hood Fan (Cont'd)		
	Fan Speed, rpm		1725
	Flow Rate, scfm		515
5.	Sampling Sink and Hood		
	Quantity		1 (Packaged Assembly)
	Type		Open Top
	Fluid		Reactor Coolant, Condensate and Demineralized Water
	Design Pressure, psig		0
	Design Temperature, °F		200
	Material		Stainless Steel
6.	Piping and Valves		
	Valves	Classes	150 psi; 300 psi; 900 psi; 1500 psi, 1878
		Codes	ASME Section III and ANSI B16.5 as applicable
		Material	304 SS, SA 351-CF8M
	Piping	Code	ANSI B31.1 and ASME Section III Class 2
		Material	304 SS

TABLE 9.3-4a

PRIMARY SAMPLING SYSTEM LOCAL INSTRUMENTATION

System Parameter and Location	Tag Number or Control Function	Inst(1) Range	Normal Operating Range	Inst(1) Accuracy
Heat Exchanger Outlet Temperature	TI-5510, TI-5520 TI-5530, TI-5540		100-140 F	
Sample Vessel Inlet Pressure	PI-5510, PI-5560		2050-2175 psig	
Sample Vessel Outlet Pressure	PI-5530, PI-5550		20-30 psig	
Sample Flow	FI-5530, FI-5550		0.5-1.5 gpm	

(1) Instrument ranges are selected in accordance with standard engineering practices. Instrument accuracies are selected such that existing instrument loop performance and safety analysis assumptions remain valid. Where applicable, instrument accuracies are also evaluated for their impact on setpoints in accordance with the FPL Setpoint Methodology.

TABLE 9.3-5

REACTOR COOLANT AND PRIMARY WATER CHEMISTRY[1]

Reactor Makeup Water Source

Analysis[2]	Typical Value[2]
pH	6.0 - 8.0 @ 25°C
Conductivity	<0.2 µmhos/cm @ 25°C
Chloride	≤1.0 ppb
Fluoride	≤1.0 ppb
Sulfate	≤1.0 ppb
Sodium	≤1.0 ppb
Silica	<10.0 ppb
Suspended Solids	≤10.0 ppb

Reactor Coolant
(Mode 1)

Control Parameter[3]	Steady State Limit
Dissolved Oxygen	≤100 ppb
Chloride	≤150 ppb
Fluoride	≤150 ppb
Hydrogen	25 - 50 cc H_2/Kg_{H20}[6]
Sulfate	≤50 ppb
Lithium	Consistent with the requirements of the boron/lithium control program[5].
Zinc Acetate (Depleted Zinc)	5ppb-10ppb Notes (7)

Diagnostic Parameter[4]	Steady State Typical Value
Boron	Consistent with fuel cycle boron projections.
Conductivity	Consistent with concentration of additives.
pH	Consistent with concentration of additives.
Suspended solids	≤10 ppb
Hydrazine	During startup only, maintain residual until dissolved oxygen is removed.
Ammonia	Trend to monitor.

Notes:

(1) Reference Engineering Evaluation PSL-ENG-SENS-99-005.

(2) In order to prevent degradation of chemistry parameters in the RCS it is necessary to minimize impurity content through the makeup water. Typical values indicated above are those normally achieved in makeup systems and are used for diagnostic evaluation of RCS chemistry values.

(3) Control Parameters are those parameters that require strict control due to material integrity consideration.

(4) Diagnostic Parameters are those parameters which assist the chemistry staff in interpreting primary coolant chemistry variations, or those parameters which may affect radiation field buildup, corrosion performance of system materials, or fuel integrity.

(5) Reference Engineering Evaluation PSL-ENG-SEMS-14-003.

(6) Hydrogen lower limit reduced to 15 cc H_2/Kg_{H20} 24 hours before shutdown.

(7) PC/M: 09052, Zinc Injection

TABLE 9.3-6

PRINCIPAL COMPONENT DESIGN DATA SUMMARY

Component	Parameter	Description
Regenerative Heat Exchanger	Quantity	1
	Type	Shell and Tube, Vertical
	Code	ASME Section III, 1974 Edition Class 2
	Design Values	
	Tube Side (Letdown):	
	Fluid	Reactor Coolant
	Design Pressure, psig	2485
	Design Temperature, F	650
	Materials	Austenitic stainless steel (seamless tube)
	Pressure loss at 128 gpm, psi	99
	Design Flow Rate, gpm	128
	Shell Side (Charging):	
	Fluid	Reactor Coolant, Boric Acid < 12 wt percent
	Design Pressure, psig	3025
	Design Temperature, F	650
	Materials	Austenitic stainless steel
	Pressure loss at 132 gpm, psi	45
	Design Flow, gpm	132

Operating Values

Parameter	Normal	Min. Letdown Max. Charging	Max. Letdown Max. Charging	Max. Letdown Min. Charging
Tube Side (Letdown):				
Flow at 120 F, gpm	40	30	128	128
Inlet Temp., F	550	550	550	550
Outlet Temp., F	263	165	375	450
Shell Side (Charging):				
Flow at 120 F, gpm	44	132	132	44
Inlet Temp., F	120	120	120	120
Outlet Temp., F	395	212	310	452

TABLE 9.3-6 (Cont'd)

Component	Parameter	Description
Letdown Heat Exchanger	Quantity	1
	Type	Shell and Tube, Horizontal
	Design Values	
	Tube Side (Letdown):	
	Code	ASME Section III, 1974 Edition Class 2
	Fluid	Reactor Coolant
	Design Pressure, psig	650
	Design Temperature, F	550
	Materials	Austenitic stainless steel (seamless tube)
	Pressure loss at 128 gpm, psi	50
	Design Flow Rate, gpm	128
	Shell Side (Cooling Water):	
	Code	ASME Section 111, 1974 Edition Class 3
	Fluid	Inhibited Water
	Design Pressure, psig	150
	Design Temperature, F	250
	Materials	Carbon Steel
	Pressure loss at 1200 gpm, psi	15
	Design Flow, gpm	1275

Operating Values

Parameter	Normal	Min. Letdown Max. Charging	Max. Letdown Max. Charging	Max. Letdown Min. Charging
Tube Side (Letdown):				
Flow at 120 F, gpm	40	30	128	128
Inlet Temp.,F	263	165	375	450
Outlet Temp., F	120	120	120	140
Shell Side (Cooling Water):				
Flow at 120 F, gpm	190	51	1200	1200
Inlet Temp., F	100	100	100	100
Outlet Temp., F	130	129	127	135

TABLE 9.3-6 (Cont'd)

Design Parameters

Component	Parameter	Description
Purification Filter	Quantity	2 (2A filter is normally bypassed)
	Type	Replaceable Cartridge
	Design temperature, °F	250
	Design pressure, psig	200
	Design flow, gpm	128(1)
	Normal temperature, °F	120
	Normal pressure, psig	50-100
	Normal flow, gpm	40
	Clean Δp at 128 gpm, psig	5 nominal
	Δp at 128 gal/min, loaded, psi	60 (30 psid per filter) The filter elements have a maximum loaded pressure differential of 75 psid.
	Particle Size Retention for 2 microns and larger, Synthetic Crud %	98 (original criteria per Section 9.3.4.2.1.2 media size varies
	Particle Size Retention for 2 microns and larger, Actual Crud %	95 (original criteria) per Section 9.3.4.2.1.2 media size varies
	Fluid	Reactor coolant
	Code	ASME III, Class 2, 1977 Edition, Summer 1977 Add.
	Shell materials, wetted	Austenitic stainless steel
CVCS Ion Exchangers	Quantity	3
	Type	Flushable
	Design pressure, psig	200
	Design temperature, °F	250
	Normal operating temperature, °F	120
	Normal operating pressure, psig	50-100
	Resin volume, total, ft^3 each,	36.2
	Resin volume, useful, ft^3 each	32
	Normal flow, gpm	40
	Design flow, gpm	128(1)
	Code for vessel	ASME III, Class 2 1974 Edition, Winter 75 Addenda
	Max. Δp at 128 gpm, psi	4.1
	Retention screen size	U.S. #80 mesh
	Material	Austenitic stainless steel
	Fluid	Reactor coolant
	Resin types	Cation/anion stratified or mixed bed specialty resin overlay

(1) Purification flow may be as high as 150 gpm when aligned to the SDC system with one Ion Exchanger in operation. Maximum purification flow while aligned to the Shutdown Cooling System with parallel flow through two Ion Exchangers is 360 gpm.

TABLE 9.3-6 (Cont'd)

Design Parameters

Component	Parameter	Description
Volume control tank	Quantity	1
	Type	Vertical, cylindrical
	Internal volume, gal	4,200
	Design pressure, internal , psig	75
	Design pressure, external, psig	15
	Design temperature, F	250
	Normal operating pressure, psig	7-30
	Normal operating temperature, F	120
	Normal spray flow, gpm	40
	Blanket gas, during plant operation	Hydrogen
	Fluid	Reactor coolant, boric acid <12 wt percent
	Material	ASME SA-240, Type 304
	Code	ASME III, Class 2 1974 Edition, Winter 75
Charging pumps	Quantity	3
	Type	Horizontal, positive Displacement, plunger, constant speed
	Design pressure, psig	2,735
	Design temperature, F	250
	Capacity, gpm	44
	Normal discharge pressure, psig	2,377
	Normal suction pressure	32
	Normal temperature of pumped fluid, F	120
	Driver rating, hp	125
	Materials in contact with pumped fluid	Stainless steel
	Fluid	Reactor coolant, boric acid < 12 wt percent
	Code	ASME III, Class 2, 1971 Edition, Winter 1972 Add.

TABLE 9.3-6 (Cont'd)

Design Parameters

Component	Parameter	Description
Charging pump suction stabilizer	Quantity	3
	Vessel Material	Austenitic Stainless Steel
	Vessel Size, Gal.	10
	Design Pressure, psig	200
	Design Temperature, F	250
	Design Flowrate, gpm	44
	Bladder Material	Ethylene Propylene
	Code	ASME III, Class 2 1977 Edition
Pulsation dampener	Quantity	3
	Vessel Material	Austenitic Stainless Steel
	Design Pressure, psig	3000
	Design Temperature, F	250
	Design Flowrate, gpm	44
	Outlet Pressure Pulsation, psi	100
	Code	ASME III, Class 2, 1977 Edition
Boric acid makeup pumps	Quantity	2
	Type	Centrifugal, horizontal
	Design pressure, psig	150
	Design temperature, F	250
	Design head, ft	231
	Design flow, gpm	143
	Runout head, ft	188
	Runout flow, gpm	240
	Normal operating temperature, F	70
	Normal suction pressure, psig	11
	Motor, hp	25
	Fluid, boric acid, normal wt%	2.5 to 3.5
	Design, wt %	12*
	Material in contact with liquid	Stainless steel
	Code	ASME III, 1974 Edition, Class 2

* The maximum boric acid concentration will be limited to ≤ 3.5 weight percent to eliminate precipitation of boron at the ambient temperature of the Auxiliary Building, thereby eliminating the need for heat tracing for most of the system.

TABLE 9.3-6 (Cont'd)

Design Parameters

Component	Parameter	Description
Boric acid makeup tanks	Quantity	2
	Type	Vertical, cylindrical
	Volume (Total), gal each	9,975
	Design pressure, internal, psig	15
	Design pressure, external, psig	0
	Design temperature, F	200
	Normal operating temperature, F	70
	Number of heaters	6* See Note 1
	Type heater	Electrical strap-on
	Heater capacity	2.25 KW each (2 banks of 3 each)
	Fluid, boric acid, normal wt%	2.5 to 3.5
	design, wt percent	12
	Material	ASME SA-240, Type 304
	Code	ASME III, 1974 Edition, Summer 1974 Class 2
Boric Acid Batching tank	Quantity	1
	Type	Vertical, Cylindrical
	Internal volume (Total), gal	636
	Design Pressure	Atmospheric
	Design temperature, F	200
	Normal operating temperature, F	170
	Type heater	Electrical immersion
	Number of heaters	3
	Heater capacity, kW ea	15
	Fluid, wt percent, boric acid, maximum	12
	Material	ASME SA-240 Type 304
	Code	None
	Mixer type	One 1/2 hp portable, single propeller mixer; 42-inch long shaft; wetted parts stainless steel

Note 1: 3 heaters for each BAMT have been deenergized. The other heaters on each tank have been reset to turn on when solution temperature drops to 60°F and turn off at 70°F.

TABLE 9.3-6 (Cont'd)

Design Parameters

Component	Parameter	Description
Chemical addition metering pump	Quantity	1
	Type	Positive displacement (variable capacity)
	Design Pressure, psig	165
	Design Temperature F	200
	Capacity, gph (max)	40
	Normal discharge pressure, psig	27
	Motor, Hp	.5
	Material in contact with pumped fluid	Stainless steel
	Fluid	N_2H_4(max 35 wt percent) $LiOH-H_2O_7$ (max 37,167 ppm Li)
	Code	None
Chemical addition tank	Quantity	1
	Internal volume, gal	12
	Design and normal operating pressure	Atmospheric
	Design temperature, F	250
	Normal operating temperature, F	100
	Material	Stainless steel
	Code	None
Process radiation monitor(*)	Quantity	1
	Type	Gamma scintillation
	Design pressure, psig	200
	Design temperature, F	130
	Normal operating temperature, F	120
	Normal flowrate, gpm	3.0
	Normal operating pressure, psig	24
	Measurement range, $\mu Ci/cm^3$	10(-4) to 10(+2)
	Code	None
	Fluid	Reactor coolant

*Note: This monitor is no longer used. See Section 11.5.2.2.2

TABLE 9.3-6 (Cont'd)

Design Parameters

Component	Parameter	Description
BORONOMETER	(Note: Abandoned in place by PC/M 03091)	
	Quantity	1
	Vessel design temperature, °F	200
	Vessel design pressure, psig	200
	Normal operating temperature, °F	120
	Minimum required flowrate, gpm	0.5
	Normal operating pressure, psig	24
	Range of measurement, boron, ppm	0-5000
	Accuracy, sample, ppm @ 120°F	+/-(1% of reading + 5 ppm) for sample temperatures between 100°F and 140°F
	Code for vessel	ASME Section VIII, Division 1
	Fluid	Reactor coolant
	Zinc Injection Skid Design Data	
	Zinc Injection Skid	1
	Design Pressure, psig	150
	Design Temperature, °F	40 - 120
	Design Flow Rate, gph	0.16 - 1.60
	Fluid	Water & Zinc acetate*

*Depleted zinc is used.

TABLE 9.3-7

CHEMICAL AND VOLUME CONTROL SYSTEM PROCESS PARAMETERS

Item	Value
Normal letdown and purification flow, gpm	40
Maximum letdown and purification flow, gpm	128[1]
Normal charging flow, gpm	44
Maximum charging flow, gpm	132
Reactor coolant pump controlled bleedoff, 4 pumps, gpm	4
Normal letdown temperature from reactor coolant system loop, °F	535≤T≤549
Normal charging temperature to reactor coolant system loop, °F	395
Normal ion exchanger operating temperature, °F	120
Boric acid makeup tank boron concentration, boric acid, minimum, wt percent	2.5
Refueling water storage tank boron concentration, minimum/maximum equilibrium core, ppm	1900-2200
Minimum Soluble boron addition rate capability at end of life, one charging pump operating, ppm/h	183

(1) Purification flow may be as high as 150 gpm when aligned to the SDC system with one Ion Exchanger in operation. Maximum purification flow while aligned to the Shutdown Cooling System with parallel flow through two Ion Exchangers is 360 gpm.

TABLE 9.3-8

CHEMICAL AND VOLUME CONTROL SYSTEM PROCESS FLOW DATA

CVCS Normal Purification Operation (One Charging Pump In Operation) (a)

CVCS Location	1	2	3	4	5	6	7	a 7	b	8	9	10	a	10 b	c	11	12	13	a,b 14c,d	14 e	14 f	14 g
Flow (gal/min)	40	40	40	40	40	39	1	1/2	1/2	40	40	40	40	40	44	44	44	44	1	0	4	4
Press (lb/in^{2}g)	2206	2190	435	430	34	33	34	34	34	32	31	29	28	25	28	37	2377	2345	39	39	31	18
Temp (F)	550	263	263	120	120	120	120	120	120	120	120	120	120	120	120	120	120	395	135	135	135	135

CVCS Intermediate Purification Operation (Two Charging Pumps in Operation) (a)

CVCS Location	1	2	3	4	5	6	7	a 7	b	8	9	10	a	10 b	c	11	12	13	a,b 14c,d	14 e	14 f	14 g
Flow (gal/min)	84	84	84	84	84	83	1	1/2	1/2	84	84	84	84	84	88	88	88	88	1	0	4	4
Press (lb/in^{2}g)	2177	2111	452	430	58	54	50	58	58	52	50	41	38	25	28	37	2406	2316	39	39	31	18
Temp (F)	550	334	334	120	120	120	120	120	120	120	120	120	120	120	120	120	120	364	135	135	135	135

CVCS Maximum Purification Operation (Three Charging Pumps in Operation) (a)

CVCS Location	1	2	3	4	5	6	7	a 7	b	8	9	10	a	10 b	c	11	12	13	a,b 14c,d	14 e	14 f	14 g
Flow (gal/min)	128	128	128	128	128	127	1	1/2	1/2	128	128	128	128	128	132	132	132	132	1	0	4	4
Press (lb/in^{2}g)	2134	1994	480	430	88	97	97	97	97	85	80	59	55	25	28	37	2562	2353	39	39	31	18
Temp (F)	550	375	375	120	120	120	120	120	120	120	120	120	120	120	120	120	120	310	135	135	135	135

CVCS Makeup System Operation - Manual Mode (Blended Boron Concentration-2150 ppm)

CVCS Location	15	16	17	18	19	20	21	22	23	24	25	26	27	28	29
Flow (gal/min)	129	130	21	21	0	21	111	111	150	0	0	0	129	121	8
Press (lb/in^{2}g)	9	107	107	86	27	35	100	27	29	27	107	27	107	72	72
Temp (F)	70	70	70	70	70	70	95	95	95	95	70	70	70	70	70

a) The pressure drop across the purification filters, ion exchanger and letdown strainers varies with loading. The pressure drops as shown are given with minimal crud deposition or accumulation. The pressure in the volume control tank varies and affects the pressure at locations 5 through 14g, 20, 22, 23, 26, 32 proportionally.

b) Since line pressure drops are dependent on piping and equipment elevations and since assumed pipe lengths were used for calculation purposes, the pressure values are approximate.

c) The parameter values provided above are historical and could change depending on other plant conditions; for example, required RCS hydrogen concentration would change VCT normal operating pressure conditions.

TABLE 9.3-8 (Cont'd)

CVCS MAKEUP SYSTEM OPERATION - AUTOMATIC MODE (BLEND CONCENTRATION - 70 ppm)															
CVCS Location	15	16	17	18	19	20	21	22	23	24	25	26	27	28	29
Flow (gal/min)	150	150	7	7	0	7	125	125	132	0	0	0	143	135	8
Press (lb/in^{2}g)	9	107	107	105	27	31	100	31	31	19	107	27	107	75	75
Temp (F)	70	70	70	70	70	70	95	95	95	95	70	70	70	70	70

CVCS MAKEUP SYSTEM OPERATION - BORATE MODE															
CVCS Location	15	16	17	18	19	20	21	22	23	24	25	26	27	28	29
Flow (gal/min)	129	150	21	21	0	21	0	0	21	0	0	0	129	121	8
2g)Press (lb/in	9	107	107	86	27	33	100	33	33	19	107	27	107	72	72
Temp (F)	70	70	70	70	70	70	95	95	70	95	70	70	70	70	70

CVCS MAKEUP SYSTEM OPERATION - DILUTION MODE															
CVCS Location	15	16	17	18	19	20	21	22	23	24	25	26	27	28	29
Flow (gal/min)	150	150	0	0	0	0	128	128	128	0	0	0	150	142	8
Press (lb/in^{2}g)	9	107	107	107	27	30	100	30	30	19	107	27	107	71	77
Temp (F)	70	70	70	70	70	70	95	95	95	95	70	70	95	70	70

Note: The parameter values provided above are historical and could change depending on other plant conditions; for example, required RCS hydrogen concentration would change VCT normal operating pressure conditions.

TABLE 9.3-8 (continued)

CVCS Makeup System Auto Mode

CVCS Location	30	31	32	33
Flow (gal/min)	8	0	0	0
Press (lb/in^{2}g)	12	7	7	27
Temp (F)	70	70	70	70
CVCS Makeup System Borate System				
CVCS Location	30	31	32	33
Flow (gal/min)	8	0	0	0
Press (lb/in^{2}g)	16	7	7	27
Temp (F)	70	70	70	70
CVCS Makeup System Dilute Mode				
CVCS Location	30	31	32	33
Flow (gal/min)	8	0	0	0
Press (lb/in^{2}g)	15	7	7	27
Temp (F)	70	70	70	70

Note: The parameter values provided above are historical and could change depending on other plant conditions; for example, required RCS hydrogen concentration would change VCT normal operating pressure conditions.

TABLE 9.3-9

FAILURES MODES AND EFFECTS ANALYSIS

CHEMICAL VOLUME CONTROL SYSTEM

No.	Name	Failure Mode	Cause	Symptoms and Local Effects Including Dependent Failures	Method of Detection*	Inherent Compensating Provision	Remarks and Other Effects
				A. LETDOWN AND PURIFICATION PORTION			
1.	Letdown line containment isolation valve V2515, or V2516, or V2522	a) Fails to close	Mech. malf., Corrosion, Elect Malf., Instru. malf.	Loss of redundant isolation capability.	Valve status indicator, Periodic testing, Letdown line flow indicator	Redundant letdown line containment isolation valves provide adequate isolation.	
		b) Fails Close	Mech. malf., Corrosion, Loss of air supply, Elect. malf.	Isolation of letdown line flow path. Gradual increase in pressurizer level.	No flow indication from FIA-2202 Periodic testing Valve status indicator, Pressurizer level indicator	None	Letdown is not required for safe shutdown.
2.	Letdown control valve LCV-2110P or LCV-2110Q	a) Fails open or regulates high	Mech malf., Elect. malf, Instru. malf.	Inability to regulate letdown flow. Also, inability to reduce letdown pressure to the operating pressure of the letdown heat exchanger. Possible excess letdown flow.	Periodic testing, Valve position indicator, Low pressurizer level indication	Redundant letdown control valve.	One letdown control valve is normally controlled by the pressurizer level control program to obtain a letdown flow equal to the charging flow minus total reactor coolant pump bleedoff flow.
		b) Fails closed or regulates low	Mech. malf., Elect. fault , Instru. malf., Loss of air supply	Loss of one letdown control valve.	Periodic testing, Valve position indicator, No flow from indicator FIA-2202, High pressurizer level indication	Redundant letdown control valve	

* The Method of Detection Column is used to show that it is possible to detect the failure during or before the system's operation.

TABLE 9.3-9 (Cont'd)

No.	Name	Failure Mode	Cause	Symptoms and Local Effects Including Dependent Failures	Method of Detection*	Inherent Compensating Provision	Remarks and Other Effects
3.	Letdown pressure valve PCV-2201P or PCV-2201Q	a) Fails open or regulate high	Mech malf., Elect. fault, Instru. Malf.	Possible increase in letdown flow rate, Decrease in pressurizer level, Increase VCT level, Possible flashing in letdown HX.	Low pressure indication from PT-2201, Periodic testing, Low pressurizer indications, High VCT level indication, High letdown flow rate from FIA-2202	Redundant letdown backpressure valve. Flow path can be manually aligned. Pressurizer level control system will close letdown control valve to compensate.	Normally, letdown flow is through one of the parallel configurated letdown backpressure valves.
		b) Fails close or regulates low	Mech. malf., Corrosion, Elect fault, Loss of air supply, Instru. malf.	Decrease or isolation of letdown flow. Increase in pressurizer level.	Low flow indication from FIA-2202, Periodic testing, High pressure indication from PT-2201	Redundant letdown back-pressure valve. Pressurizer level control system will open letdown control valve to compensate	Manual opening of backpressure isolation valves provides alternate flow path.
4.	Boronometer line isolation valve V2468	a) Fails open		No effect. This line is isolated			The Boronometer was abandoned via PC/M 03091.
		b) Fails closed		No effect. This line is isolated			The Boronometer was abandoned via PC/M 03091.
5.	Ion exchanger bypass valve V2520	a) Fails to Bypass position	Loss of air supply, Mech. malf., Elect. malf., Instru. malf.	Letdown flow bypasses ion exchangers. Possible buildup of contaminants in the primary coolant.	Valve status indicator in control room	Remote sampling	This valve is designed to close to the bypass position if letdown temperature exceeds 140°F so that letdown flow bypasses the ion exchangers.

* The Method of Detection Column is used to show that it is possible to detect the failure during or before the system's operation.

TABLE 9.3-9 (Cont'd)

No.	Name	Failure Mode		Cause	Symptoms and Local Effects Including Dependent Failures	Method of Detection*	Inherent Compensating Provision	Remarks and Other Effects
		b)	Fails in straight through position	Elect. malf., Mech. Malf. Corrosion, Instru. malf.	Unable to bypass ion exchangers.	Valve status indicator, high letdown temperature indication from TIC-2224	Alternate ion exchanger bypass flow paths can be aligned.	
6.	Regenerative heat exchanger letdown line temperature indicator controller TIC-2221	a)	Erroneous high temp. indication, Controls high	Elect. malf., Instr. malf.	Undesired isolation of letdown flow.	No flow indication from FIA-2202. Valve (V2515), status indicator	Repair of defective temperature instrumentation.	Excessively high regenerative heat exchanger discharge temperature causes letdown line isolation valve, V2515, to close.
		b)	Erroneous low temperature indication, Controls low	Elect. malf., Instru. malf.	Inability to isolate letdown line on high temperature.	Comparison with downstream tempera-ture instrumentation, Position change in CCW control valve	Repair of defective temperature instrumentation.	
7.	Letdown heat exchanger temperature indicator controller TIC-2223	a)	Erroneous high temperature, Controls high	Elect. malf. Instru. malf.	Abnormally cooled let-down heat exchanger discharge flow	Comparison with temperature indication from TIC-2224	Repair of defective temperature indicator	Signals from this indicator regulate the letdown heat exchanger cooling water control valve
		b)	Erroneous low temperature indication, Controls low	Elect. malf., Mech. malf.	Abnormally high letdown heat exchanger discharge temperature	Same as 6a, High VCT temperature from TIA-2225	Same as 7a.	
8.	Letdown heat exchanger temperature indicator controller TIC-2224	a)	Erroneous high temp. indication, controls high	Elect. malf., Instru. malf.	Automatic bypass of the ion exchangers during plant operation. Possible increase in reactor coolant buildup.	Comparison with temp. indicator TI-2223, Abnormal buildup of fission products detected through sampling of the reactor coolant	Repair of defective temperature indicator	Periodic sampling detects any unusual buildup of reactor coolant impurities.
		b)	Erroneous low temperature indication Controls low	Elect. malf. Instru. malf.	Unable to automatically bypass heat exchangers on high letdown heat exchanger	Comparison with temperature indication TI-2223, High VCT temperature from TIA-2225	Same as 8a.	

*The Method of Detection Column is used to show that it is possible to detect the failure during or before the system's operation.

TABLE 9.3-9 (Cont'd)

No.	Name	Failure Mode	Cause	Symptoms and Local Effects Including Dependent Failures	Method of Detection*	Inherent Compensating Provision	Remarks and Other Effects
9.	Letdown heat exchanger pressure indicator controller PIC-2201	a) Erroneous pressure indication controls high	Elect. Malf., Instru. Malf	Undesired high regulation of letdown backpressure control valve. Possible increase in letdown flow. Decrease In pressurizer level.	Periodic testing, Letdown backpressure control valve position indicator, High letdown flow alarm, Low pressurizer level indication.	Operator can use other letdown instrumentation to aid in manual of the letdown backpressure control valve.	
		b) Erroneous low pressure indication, controls low	Elect. Malf., Instru. Malf.	Undesired low regulation of letdown backpressure control valve. Possible decrease in letdown flow.	Periodic testing, high pressurizer level, letdown backpressure control valve position indicator.	Same as 9a.	
10.	Regenerative heat exchanger pressure differential indicator PDIS-2216	a) Erroneous high diff. pressure indication	Elect. Malf., Instru. Malf.	Undesired isolation of letdown line. Gradual increase in pressurizer level.	Periodic testing, No letdown flow indication from FIA-2202, Low letdown pressure alarm from PA-2201, valve V2516 status indicator.	None	Excessively high regenerative heat exchanger differential pressure causes letdown line isolation valve, V2516, to close automatically
		b) Erroneous low diff. pressure indication	Elect. Malf., Instru. Malf.	Unable to isolate letdown line on high regenerative heat exchanger differential pressure.	Periodic testing, Actuation of letdown heat exchanger relief valve.	Relief valve, V2345 provides overpressure protection for the letdown heat exchanger and intermediate piping and components.	
11.	VCT bypass valve V2500	a) Fails to VCT position	Mech. Malf., corrosion, Loss of air supply, Elect. malf., Instr. Malf.	Inability to automatically bypass the VCT.	Increasing VCT level from indicator LIC-2226. Valve status indicator, Periodic testing	VCT manual isolation valve, V2623, can be used to isolate letdown flow to the VCT during feed and bleed operation.	
		b) Fails to bypass position	Mech, malf., Instru. Malf., Elect. Malf.	Diversion of letdown plow to WMS. Decrease In VCT level.	VCT low level alarm Periodic testing valve status indicator	The charging pump section is automatically switched to the BAMT and/or RWT whenever there is a low level alarm in the VCT.	

*The Method of Detection Column is used to show that it is possible to detect the failure during or before the system's operation.

TABLE 9.3-9 (Cont'd)

No	Name	Failure Mode	Cause	Symptoms and Local Effects Including Dependent Failures	Method of Detection*	Inherent Compensating Provision	Remarks and Other Effects
				B. REACTOR COOLANT PUMP CONTROLLED BLEEDOFF PORTION			
1.	RCP controlled bleedoff header isolation valve to quench tank V2507	a) Fails open during normal plant operation	Mech. malf., Corrosion, Faulty air supply, Elect. malf	No effect – Valve V2199 set pressure sufficient to divert flow to VCT.	Periodic testing, Remote valve position indication verification.	None	Valve V2507 maintained in the closed position and is a failed closed valve.
		b) Fails open during Station Blackout, CIS or Fire in conjunction with loss of CCW to RCP seal longer than 10 minutes	Mech. malf., Corrosion, Faulty air supply, Elect. malf.	Not able to isolate controlled bleed-off to Quench Tank	Periodic testing, Remote valve position indication verification.	Allow higher temperature gradient across RCP seal resulting in elastomer damage and possible shaft leak	Valve V2507 maintained in the closed position and is a failed closed valve.
		c) Fails closed during normal plant operation	Mech. malf., Corrosion, Faulty air supply, Elect. malf.	Controlled bleed-off flow path to the Quench Tank is isolated.	Periodic testing, Remote valve position indication verification.	Alternate flow path to the Quench Tank not available.	Controlled bleedoff flow from the reactor coolant pump can be routed to the VCT.
		d) Fails closed during Station Blackout, CIS or Fire in conjunction with loss of CCW to RCP seal longer than 10 minutes	Mech. malf., Corrosion, Faulty air supply, Elect. malf.	Controlled bleed-off flow path to the Quench Tank is isolated.	Periodic testing, Remote valve position indication verification.	Isolation of controlled bleed-off is required when cooling water to the seals is lost.	Valve V2507 maintained in the closed position.
2.	RCP controlled bleedoff containment isolation valve V2505 or V2524	a) Fails open	Mech. malf., Corrosion, Faulty air supply, Elect. malf.	Partial loss of containment isolation capability.	Periodic testing, Valve status indication	Redundant series containment isolation valve provides backup.	These valves are closed upon generation of a CIS.
		b) Fails close	Mech. malf., Corrosion, Elect. malf., Faulty air Supply, Elect. Malf.	Loss of all RCP controlled bleedoff to VCT. Possible damage to RCP seals due to overheating. High RCP controlled bleedoff header pressure.	High pressure indication from PIA-2215, Periodic testing, Valve status indication	Provide controlled bleedoff flow path to the Quench Tank by opening valve V2507.	These valves are failed closed valves.

TABLE 9.3-9 (Cont'd)

C. CHARGING AND VOLUME CONTROL PORTION

1.	VCT vent line isolation valve V2513	a)	Fails open	Mech. malf. Faulty air supply, Elect. malf.	Inability to maintain a hydrogen overpressure on the VCT.	Low VCT pressure from pressure indicator PIA-2225, Periodic testing Valve status indication	VCT isolation valve V2102 can provide backup isolation	The hydrogen overpressure on the VCT is provided to scavenge any oxygen that may be introduced into the RCS.
		b)	Fails close	Mech. malf., Loss of air supply, Elect. malf.	Loss of capability to purge VCT with nitrogen to exclude oxygen. Possible overpressurization of VCT.	Periodic testing, High pressure indication from PIA-2225, valve status indication	VCT relief valve provides overpressure protection.	

*The Method of Detection Column is used to show that it is possible to detect the failure during or before the system's operation.

TABLE 9.3-9 (Cont'd)

No.	Name	Failure Mode	Cause	Symptoms and Local Effects Including Dependent Failures	Method of Detection*	Inherent Compensating Provision	Remarks and Other Effects
2.	VCT discharge isolation valve V2501	a) Fails open	Mech. malf., Elect. malf., Corrosion, Instru. malf.	Possible emptying of the VCT	Periodic testing. low level alarm from VCT level indication, Valve status indicator	Charging pump suction is switched from VCT to RWT	The charging pump suction is automatically switched from the VCT to the RWT whenever there is a low-low level indication.
		b) Fails close	Mech malf., Elect. malf., Instru. malf.	Isolation of charging pump suction from VCT.	Low charging pump suction line pressure from PS-2224X, PS-2224Y, PS-2224Z, Periodic testing	Charging pump suction can be manually or automatically switched to the RWT	A pressure switch on each charging pump suction manifold stops the associated charging pump on low suction line pressure thus preventing damage due to cavitation.
3.	Charging pump 2A, 2B, or 2C.	a) Operating pump fails	Elect. malf., Mech. malf.	Loss of charging flow. Low pressurizer level. High letdown temperature	Pump "run" light, Low flow indicator/alarm from FIA-2212, Low pressure from indicator PIA-2212, Low level alarm from pressurizer level indicators, high regenerative heat exchanger discharge temperature from TI-2221.	Two redundant standby pumps	Normally one pump is running to balance the letdown and RCS pump bleedoff flowrates.
		b) Standby pump fails to start	Elect. malf., Mech. malf.	Inability to establish charging flow through affected pump. Inability to meet charging requirement of more than one pump. Low pressurizer level.	Pump "run" light, Low flow indication from FIA-2212, Low pressurizer level alarm	Redundant standby pump can be manually started	The combined capacity of two charging pumps is sufficient to match the reactor coolant contraction rate.

*The Method of Detection Column is used to show that it is possible to detect the failure during or before the system's operation.

TABLE 9.3-9 (Cont'd)

No.	Name	Failure Mode	Cause	Symptoms and Local Effects Including Dependent Failures	Method of Detection*	Inherent Compensating Provision	Remarks and Other Effects
		c) Undesired starting of standby pump	Faulty charging pump controls	Reduction in VCT inventory. High pressurizer level.	VCT level indicators, Pressurizer Level indicators/alarms, Pump “run light in control room	Pressurizer level controls will increase letdown flow and/or turn off one charging pump	
4.	Charging pump bypass line throttle valve V2553, V2554, V2555	a) Fails open	Elect. Malf., Mech. Malf,. Corrosion, Instru. Malf.	Inability to establish Charging flow by affected pump.	Periodic testing, Valve status indication	Redundant standby charging pump.	These valve assure the require pressure drop thus preventing potential overpressurization of the VCT.
		b) Fails close	Elect. Malf., Mech malf., Corrosion, Instru. Malf.	Loss of capability to gradually warm up charging line piping during pump startup.	Periodic testing, Valve status indication	None	
5.	Charging line containment isolation valve V2523	a) Fails open	Loss of air supply, Mech. malf., Elect. malf.	Loss of containment Isolation capability on charging line.	Periodic testing, Valve status indication	Charging line check valve inside containment prevents back flow	
		b) Fails close	Mech. Malf., Elect. Malf.	Loss of charging capability via charging line.	Periodic testing, High pressure indication from PIA-2212, no flow indication from FIA-2212, Valve status indication	Charging via safety injection system can be achieved if the charging line becomes inoperable	This valve is normally locked open inside the control room.
6.	Auxiliary spray line isolation valve SE-02-3, SE-02-4	a) Fails to close	Elect. Malf., Mech. Malf.	Possible inadvertent depressurization of the RCS. Continuous excessive pressurizer spraying	High pressurizer water level alarm, Pressurizer indicators and alarms, Periodic testing, Valve status indication	Manual auxiliary spray line valve, V2483, can provide backup isolation	These valves are normally locked closed in the control room.
		b) Fails close	Elect. Malf., Mech. Malf.,	Loss of pressurizer pressure control capability via the auxiliary spray line (RCS pumps shut off). Unable to establish auxiliary spray flow during shutdown for operator control of RCS pressure.	High pressurizer pressure, Periodic testing, Valve status indicator	Redundant isolation valve	Pressurizer pressure control can be achieved without these valves by repeatedly filling (slowly) the pressurizer with fluid via the surge line, then dumping steam via the atmospheric steam dump valves.

*The Method of Detection Column is used to show that it is possible to detect the failure during or before the system’s operation.

TABLE 9.3-9 (Cont'd)

No.	Name	Failure Mode	Cause	Symptoms and Local Effects Including Dependent Failures	Method of Detection*	Inherent Compensating Provision	Remarks and Other Effects
7.	Charging line distribution valve SE-02-1, SE-02-2	a) Fails open	Mech. malf., Elect. malf.	Reduction in auxiliary spray flow during cooldown operation. Unable to terminate charging flow to one charging nozzle.	Pressurizer pressure indicator and alarms Periodic testing, Valve status indication	Charging nozzle manual isolation valve can provide backup capability	
		b) Fails close	Mech. malf., Elect. malf.	Loss of flow via one charging nozzle	Periodic testing, valve status indication	Redundant charging line distribution valve	These valves are designed to fail open
8.	Charging pump pressure switch PS-2224X, PS-2224Y, PS-2224Z	a) Erroneous high pressure	Elect. malf., Mech. malf.	Improper local indication	Periodic testing	None required	No effect on system operation
		b) Erroneous low pressure	Elect. malf., Mech. malf.	Inadvertent shutoff of normally operating charging pump. Loss of one pump if more than one pump is in operation	Low charging flow indication from FIA-2212, Periodic testing	Pressurizer level controls will start standby charging pump	
9.	VCT level indicator LIC-2226	a) Erroneous high level indication	Elect. malf., instru. malf.	Undesired shutoff of the makeup system, if it is in operation. Unable to automatically start the makeup system when required.	Alarm in control room Periodic testing, comparison with level control	None required	
		b) Erroneous low level ndication	Elect. malf., instru. malf.	Inadvertent actuation of the automatic makeup system Unable to stop makeup system at tile end of makeup operation.	No abnormal indication from VCT pressure indicator	Level control LC-2227 annunciates on low VCT level and also divert letdown flow to the flash tank on high VCT level	
		c) Fails to operate	Elect. malf., Mech. malf.	Unable to establish and control the starting and stopping of the automatic makeup system	Periodic testing	The automatic makeup system can be manually actuated and controlled	

*The Method of Detection Column is used to show that it is possible to detect the failure during or before the system's operation.

TABLE 9.3-9 (Cont'd)

No.	Name	Failure Mode	Cause	Symptoms and Local Effects Including Dependent Failures	Method of Detection*	Inherent Compensating Provision	Remarks and Other Effects
10.	VCT level control LC-2227	a) Erroneous high level	Elect. Malf., Instru. Malf.	Undesired diversion of letdown flow to the flash tank. Possible emptying of VCT.	Periodic testing	Automatic makeup system	The VCT can by isolated and the suction of the charging pump switched to the RWT.
		b) Erroneous low level	Elect. Malf., Instru. Malf.	Undesired isolation of VCT.	Periodic testing, Comparison with level indicator LIC-2226	The operator can divert letdown flow to the flash tank	Charging pump suction will be switched automatically to the RWT.
11.	RWT fill/discharge line isolation valve V2504	a) Fails open	Elect. Malf., Mech. Binding,	Reduction in RWT inventory	Low RWT level, Valve status indication Periodic testing	Manual isolation valve V2545, can provide isolation	
		b) Fails close	Elect. Malf., Mech. Binding, Corrosion	Unable to establish charging pump suction from RWT when required.	Low charging pump suction pressure indication, Periodic testing	None	Charging pump pressure indicator switch will stop pump, and prevent damage due to cavitation.
12.	Charging pump controls	a) Fails to start stand- by pump	Elect. Malf., Instru. Malf.	Unable to establish adequate charging when more than one pump is required. Decrease in pressurizer level.	Low flow indication from FIA-2212, Periodic testing, low charging pump discharge pressure indication from PIA-2212, Pump “run” light, low pressurizer level.	Manual starting of standby pump(s) to attain the required charging flow.	
		b) Fails to stop operating pump(s)	Elect. Malf., Instru. Malf.	Possible damage to charging pump(s) due to low suction pressure. Possible over charging of primary system. Reduction in VCT inventory.	High pressurizer level indication, low VCT level alarm Periodic testing	Manual interruption of power supply to pump.	

*The Method of Detection Column is used to show that it is possible to detect the failure during or before the system’s operation.

TABLE 9.3-9 (Cont'd)

No.	Name	Failure Mode	Cause	Symptoms and Local Effects Including Dependent Failures	Method of Detection*	Inherent Compensating Provision	Remarks and Other Effects
		c) Fails to close/open charging pump throttle valve	Elect. malf. Instru. malf.	Unable to establish charging flow, also, unable to stop charging flow at the end of shutdown operation, possible emptying of boric acid makeup tanks.	Periodic testing, abnormal flow indication from FIA-2212	Manual throttling to achieve startup or/and shutdown	
				D. CHEMICAL ADDITION PORTION			
1.	Chemical addition metering pump	a) Fails to start	Elect. malf., Corrosion, Mech. malf.	Inability to inject lithium hydroxide or hydrazine into the RCS when required for chemistry control	Periodic testing, Visual check to see if the pump is running.	None	
		b) Fails during operation	Elect. malf., Mech. malf.	Reduction in the quantity of lithium hydroxide injected into the RCS.	Visual check to see if the pump is running.	None	
				E. BORATION PORTION			
1.	Boric acid batching tank heater	a) Fails open or low	Elect. malf.	Possible precipitation of boric acid solution during batching operation. Reduction in boric acid solution temperature. Inability to prepare boric acid solution due to solubility problem.	Low temperature indication from TIC-2213	Portable mixer	Adequate quantity of boric acid solution is stored in the boric acid makeup tanks during the intermittent batching process.
		b) Fails high	Elect. malf.	Excessive heating of boric acid solution. Possible precipitation due to evaporation	High temperature indication from TIC-2213	Manually disconnect heater power supply	

*The Method of Detection Column is used to show that it is possible to detect the failure during or before the system's operation.

TABLE 9.3-9 (Cont'd)

No.	Name	Failure Mode	Cause	Symptoms and Local Effects Including Dependent Failures	Method of Detection*	Inherent Compensating Provision	Remarks and Other Effects
2.	Boric acid makeup tank heaters	a) Fails off or low	Elect. malf.	Possible precipitation of boric acid in affected tank. Decrease in boric acid solution temperature.	Low temperature indication/alarm from TIC-2207, or TIC-2209	Redundant boric acid source from unaffected makeup tank.	The boric acid makeup pumps can be used to recirculate the contents of the makeup tanks thus precluding precipitation.
		b) Fails high	Elect. malf.	Excessive heating of boric acid solution. Possible boiling which leads to precipitation.	High temperature indication/alarm from TIC-2206 or TIC-2208. Local sampling	Manually disconnect heater bank power supply	
3.	Gravity feed line Isolation valve V2508 or V2509	a) Fails open	Elect. malf., Mech. malf.	Undesired boron injection. Increase in the RCS boron concentration. Draining of affected makeup tank.	Periodic testing, low level indication/ alarm from LIA-2206 or LIA-2208, Valve status indication	The affected tank can be manually isolated.	CVCS ion exchanger operation initiated to remove excess boron from the RCS.
		b) Fails close	Elect. malf., Mech. malf.,	Inability to inject contents of one makeup tank via the gravity feed line.	Periodic testing, No change in level indication of affected tank, valve position indication	Redundant makeup tank. Redundant flow path via makeup pump.	
4.	Boric acid makeup Pump 2A or 2B	a) Fails to start	Elect. malf., Mech. Binding Pump controls malf.	Unable to establish boron makeup or boron injection via affected pump.	Pump "run" light, low makeup pump discharge pressure indication from PI-2206 or PI-2208, no change in makeup tank level, low flow indication from FIC-2210Y	Redundant standby pump can be manually started. Makeup tanks gravity feed line during shutdown operation.	

*The Method of Detection Column is used to show that it is possible to detect the failure during or before the system's operation.

TABLE 9.3-9 (Cont'd)

No.	Name	Failure Mode	Cause	Symptoms and Local Effects Including Dependent Failures	Method of Detection*	Inherent Compensating Provision	Remarks and Other Effects
		b) Fails during operation	Elect. malf., Shaft seizure, Pump controls malf.	Loss of boron makeup or boron injection via affected pump	Decrease in makeup pump discharge pressure, low flow indication from FIC-2210Y, Pump "run" light	Redundant standby pump	
5.	Makeup tank recirculation line control valve V2650 or V2651	a) Fails open	Mech. malf., Faulty air supply, Elect. malf.	Unable to control recirculation of boric acid solution	Periodic testing, Valve status indication	Recirculation line isolation valve can provide backup isolation	
		b) Fails close	Mech. malf., Loss of air supply	Unable to establish recirculation flow. Unable to transfer boric acid solution via affected valve. Possible boric acid stratification.	Periodic testing, Makeup tank level indicator, Valve position indication, high pump discharge pressure	Some recirculation is possible through the associated mini-flow bypass line	Normally, continuous recirculation is in progress when pump is running.
6.	Direct charging pump suction boration line isolation valve V2514	a) Fails open	Mech. malf., Elect. malf.	Unable to control boron addition during boration. Undesired boration of the RCS. Possible reactor power decrease.	Low flow alarm from FIC-2210Y, Periodic testing, Valve status indicator in control room	Deborating operations established with CVCS ion exchangers.	CVCS ion exchangers remove excess boron from the RCS.
		b) Fails close	Elect. malf., Mech. malf., Corrosion	Unable to route boron acid solution directly to the charging pump suction header via makeup pumps for emergency and normal shutdown boration.	Periodic testing, Valve status indicator	Boration via the gravity feed line	Alternate path can be established by manually opening cross connect valve V2647
7.	Boration line flow control valve FCV-2210Y	a) Fails open	Mech. malf., Elect. malf.	Unable to control addition of boric acid solution. Possible over boration of RCS.	High flow rate indication from FIC-2210Y, Periodic testing, Local sampling, Valve position indication	In AUTO mode of control, makeup controller can increase the reactor makeup water flow to obtain the proper blend	Alternative – switch to MANUAL control and open V2647

*The Method of Detection Column is used to show that it is possible to detect the failure during or before the system's operation.

TABLE 9.3-9 (Cont'd)

No.	Name	Failure Mode	Cause	Symptoms and Local Effects Including Dependent Failures	Method of Detection*	Inherent Compensating Provision	Remarks and Other Effects
		b) Fails close	Mech. malf., Elect. malf., Loss of air supply, Corrosion	Possible deboration of the RCS.	No flow indication from FIC-2210Y, Periodic testing, Local sampling	If power is available, open valve V2514, otherwise alternate flow path via cross connect valve V2647	The blending tee VCT bypass line isolation valve can be opened. This would allow the controlled reactor makeup water and the boric acid solution to be discharged directly into the charging pump(s) suction header
8.	Reactor makeup water flow control valve FCV-2210X	a) Fails open	Mech. malf., Elect. malf.	Unable to control addition of reactor makeup water. Possible change in RCS boron concentration.	Valve status indication, High flow rate indication from FIC-2210X, Periodic testing, Local sampling	Makeup controller can increase the boric acid solution to achieve proper blend	
		b) Fails close	Mech. malf., Elect. malf., Loss of air supply	Possible over boration of RCS. Loss of capability to provide makeup water via normal path.	Periodic testing, No flow indication from FIC-2210X, Local sampling, Valve status indication	Alternate path via reactor makeup bypass line	
9.	Blending line control valve V2512	a) Fails open	Mech. malf., Faulty air supply, Elect. malf.	Unable to control discharge of reactor coolant makeup to the VCT for boration or dilution.	Periodic testing, High VCT level alarm, Valve status indication	The boron makeup and primary water control valves can provide backup.	
		b) Fails close	Mech. malf., Loss of air supply, Corrosion, Elect. malf.	Unable to discharge reactor coolant makeup directly to the VCT. Possible reduction in VCT inventory	Periodic testing, Low VCT level alarm Valve status indication	Alternate path via blending tee VCT bypass line	
10.	Blending tee VCT bypass line isolation valve V2525	a) Fails open	Elect. malf., Mech. malf.	Unable to isolate reactor makeup water during emergency shutdown (When boration subsystem is in operation). Possible deboration during emergency operation.	Periodic testing, valve status indicator, Local sampling	The makeup controller can adjust the flow control valves to attain the maximum boration level	This valve is closed by an SIAS. It is opened to facilitate with VCT bypass.

*The Method of Detection Column is used to show that it is possible to detect the failure during or before the system's operation.

TABLE 9.3-9 (Cont'd)

No.	Name	Failure Mode	Cause	Symptoms and Local Effects Including Dependent Failures	Method of Detection*	Inherent Compensating Provision	Remarks and Other Effects
		b) Fails close	Elect. malf. Mech. malf.	Unable to provide alternate path for the discharge of reactor coolant makeup to the charging pumps.	Periodic testing, Valve status indicator	Normal discharge flow path	
11.	Boric acid line heat tracing(1)	a) Fails off or low	Elect. malf.	Cooldown of static concentrated boric acid solution in affected section. Possible precipitation of boric acid solution.	Indication locally of malfunctioning heat tracing section	Redundant heat tracing section	
		b) Fails to high output	Elect. malf.	Excessive overheating of static concentrated boric acid solution in affected section	Actuation of thermal relief valves	Relief valve offers line protection	Thermal relief valves are provided for the portions of the boric acid system that are heat traced and which can be individually isolated
12.	Boric Acid batching tank temperature indicator TIC-2213	a) Erroneous low temp indication	Elect. malf.	Possible excessive heating of boric acid solution	Periodic testing	Isolation of affected heaters	
		b) Erroneous high temp. indication	Elect. malf.	Possible precipitation of boric acid solution within the batching tank during batch operation. Unable to automatically actuate batching tank heaters.	Periodic testing, local sampling	Portable mixer. Redundant batching tank heaters can be manually turned on and off	

NOTE 1: This applies only to those sections of the system where heat tracing must be retained.

*The Method of Detection Column is used to show that it is possible to detect failure during or before the system's operation.

TABLE 9.3-9 (Cont'd)

No.	Name	Failure Mode	Cause	Symptoms and Local Effects Including Dependent Failures	Method of Detection*	Inherent Compensating Provision	Remarks and Other Effects
13	Makeup tank temperature indicator/ control TIC-2207, or TIC-2209	a) Erroneous low temp. indication	Elect. malf.	Undesired actuation of affected makeup tank heater. Possible overheating of boric acid solution in affected tank.	Comparison with redundant temperature indicator, Decrease in makeup tank level from indicator LIA-2206 or LIA-2208	Manual isolation of affected heater. Redundant temp indicator.	A common alarm with high and low temperature annunciation is provided for each boric acid makeup tank.
	TIC-2206, or TIC-2208	b) Erroneous high temp. indication	Elect. malf.	Unable to energize heater banks of the affected tank.	Comparison with redundant temperature indicator	Redundant temperature indicator	
14	Makeup lines flow controller FRC-2210X or FRC-2210Y	Controls makeup too high or too low	Elec. malf.	Unable to properly control borate or dilute batching. Changes in RCS boron concentration.	Local sampling	None	
15	Makeup mode selector switch HS2210	a) Fails to operate properly	Elect. malf., Instru. malf.	Unable to control the addition of predetermined makeup to the primary system. Changes in RCS boron concentration.	Periodic testing	None	
		b) Fails during makeup operation	Elect malf., Instru. malf.	Unable to isolate makeup water and boration lines at the end of makeup operation. Unable to shutoff makeup pumps at the end of makeup.	Periodic testing, flow indication from FRC-2210X or FRC-2210Y Pump "run" light	Manual shutoff of makeup pump and isolation of makeup water and boration lines.	

*The Method of Detection Column is used to show that it is possible to detect the failure during or before the system's operation.

TABLE 9.3-9 (Cont'd)

No.	Name	Failure Mode	Cause	Symptoms and Local Effects Including Dependent Failures	Method of Detection*	Inherent Compensating Provision	Remarks and Other Effects
16.	Boric acid pump controls	a) Fails to start makeup pump	Elect. malf., Instru. malf.	Unable to establish borate batching via affected pump	Pump "run" light, Low makeup pump discharge pressure indication from PI-2206 or PI-2208, Periodic testing	Redundant pump	
		b) Fails to stop operating pump	Elect. malf., Instru. malf.	Unable to shutoff affected pump at the end of borate batching	Periodic testing, Pump "run" light	Recirculation and miniflow paths	The recirculation line prevents damage to operating pump when the boration flow control valve closes at the end of borate batching
		c) Spurious actuation	Elect. malf., Instru. malf.	No impact on system operation	Pump "run" light, Pump discharge pressure	Power supply to the affected pump can be manually disconnected	

*The Method of Detection Column is used to show that it is possible to detect the failure during or before the system's operations.

TABLE 9.3-9 (Cont'd)

V2507 Position Change - From Normally Locked Open, Fail Open to Normally Closed, Fail closed.

No	Name	Failure Mode	Cause	Plant Condition	Symptoms/Local Effects	Method of Detection	Inherent Compensating Provision/Failure Mode Effect	Reparks and Other Effects
17	RCP controlled bleed-off header isolation valve to Quench Tank V2507	a) Fails open	Mech. malf., Corrosion, Faulty air supply, Elect. malf.	Normal plant operation	No effect - Valve V2199 set pressure is sufficient to divert flow to Volume Control Tank.	Periodic testing, Remote valve position indication verification	No effect	Valve V2507 maintained in the closed position and is a fail closed valve.
		b) Fails open	Mech. malf., Corrosion, Faulty air supply, Elect. malf.	Station Blackout, CIS or Fire in conjunction with Loss of CCW to the RCP seal for longer than 10 minutes	Not able to isolate controlled bleed-off to the Quench Tank	Periodic testing, Remote valve position indication verification.	Allow higher temperature gradient across RCP seal resulting in elastomer damage and possible shaft leakage.	Valve V2507 maintained in the closed position and is a fail closed valve.
		c) Fails closed	Mech. malf., Corrosion, Faulty air supply, Elect. malf.	Normal operation	Controlled bleed-off flow path to the Quench Tank isolated	Periodic testing, Remote valve position indication verification.	Alternate path to the Quench Tank not available.	Controlled bleed-off flow from the Reactor Coolant Pumps can be routed to the volume control tank.
		d) Fails closed	Mech. malf., Corrosion, Faulty air supply, Elect. malf.	Station Blackout, CIS or Fire in conjunction with loss of CCW to the RCP seal for longer than 10 minutes	Controlled bleed-off flow path to the Quench Tank is isolated	Periodic testing, Remote valve position indication verification.	Isolation of controlled bleed-off is required when cooling water to the seals is lost.	Valve V2507 maintained in the closed position.
18	RCP controlled bleed-off containment isolation valve V2505 or V2524	a) Fails open	Mech. malf., Corrosion, Faulty air supply, Elect. malf.	Normal operation or CIS	Partial loss of containment isolation capability	Periodic testing, valve status indication	Redundant series containment isolation valve provides backup.	These valves are closed on CIS.
		b) Fails closed	Mech. malf., Corrosion, Faulty air supply, Elect. malf.	Normal operation, CIS, Station blackout or fire	Loss of all RCP controlled bleed-off to VCT. Possible damage to RCP seals due to overheating. High RCP controlled bleed-off header pressure.	High pressure indication from pressure indicator PIA-2215, Periodic testing, Valve status indication.	Provide controlled bleed-off flow path to the Quench Tank by opening valve V2507	These valves are fail closed valves.

TABLE 9.3-10

DESIGN DATA FOR ESF LEAKAGE COLLECTION AND RETURN SYSTEM

Valves SE-06-1, SE-07-4

Type	Globe (3 in)
Operator	Solenoid
Codes and Standards	ANSI B31.1 Class 150 lb and 300 lb
Material	304 Stainless Steel

Piping

Type	3 in, sch 10S
Material	304 Stainless Steel
Code and Standards	ANSI B31.1

TABLE 9.3-10a

POST-ACCIDENT SAMPLING SYSTEM FLOW RATES
(Historical)

Source	Nominal Flow
Reactor Coolant Hot Leg	0.2 - 1.0 gpm
Containment Building Sump	0.2 - 1.0 gpm
Containment Atmosphere	0.2 cfm

TABLE 9.3-10b

DESIGN DATA FOR POST-ACCIDENT SAMPLING SYSTEM COMPONENTS
(Historical)

1. Sample Circulation Pump

Type	Peristaltic Positive Displacement
Fluid	Post-Accident Reactor Coolant
Suction Pressure (max) psig	5
Suction Temperature (Max) °F	160
Rated Flow, gpm	1
Rated Head, ft	50
Code	Non-Code

2. Surge Vessel Pump

Type	Positive Displacement
Fluid	Post-Accident Reactor Coolant
Suction Pressure (max) psig	5
Suction Temperature (max) °F	160
Rated Flow, gpm	1
Rated head, ft	185
Code	Non-Code

3. Containment Sample Pump

Type	Vacuum Pump/Compressor
Fluid	Post-Accident Containment Atmosphere
Suction Pressure (max) psia	10-75
Suction Temperature (max) °F	300
Rated Flow, cfm	0.2
Maximum Discharge Pressure, psig	95
Code	Non-Code

4. Sample Vessel/Heat Exchanger

Type	Shell (cooling); Tube (sample flow)
Tube Sides:	
Fluid	Post Accident Reactor Coolant
Piping Design Pressure (max) psig	2485
Inlet Temperature (min/max) °F	120/650
Shell Side:	
Fluid	Component Cooling Water
Piping Design Pressure, psig	150
Inlet Temperature (min/max) °F	65/120
Flow (max) gpm	30
Code	Non-Code

5. Depressurized Liquid Sample Vessel

Internal Volume, cc	12000 ml
Design Pressure, psig	50
Design Temperature, °F	200
Operational Pressure, psig	5

TABLE 9.3-10b (Cont'd)

5. Depressurized Liquid Sample Vessel (Cont'd)

Operational Temperature, °F	120
Material	Stainless Steel 316L
Fluid	Post-Accident Reactor Coolant Code
Code	Non-Code

6. Gas Sample Vessel

Internal Volume, ml	12000
Design Pressure, psia	50
Design Temperature, °F	200
Operational Pressure, psig	5
Operational Temperature, °F	120
Material	Stainless Steel 316L
Fluid	N_2, H_2, 0_2, Fission Products
Code	Non-Code

7. Containment Sample Vessel

Internal Volume, ml	12000
Design Pressure, psig	50
Design Temperature, °F	300
Operational Pressure, psig	0 to 5
Operational Temperature, °F	250
Material	Stainless Steel 316L
Fluid	Steam, Air, H_2, Fission Products Code
Code	Non-Code

8. Surge Vessel

Internal Volume, gal.	10
Design Pressure, psig	100
Design Temperature, °F	200
Operational Pressure, psig	5
Operational Temperature, °F	120
Material	Stainless Steel 316L
Fluid	Post-Accident Reactor Coolant
Code	Non-Code

9. Burette

Internal Volume, ml	1000
Design Pressure, psig	100
Design Temperature, °F	200
Operational Pressure, psig	5
Operational Temperature, °F	120
Material	Stainless Steel 316L
Fluid	Post-Accident Reactor Coolant
Code	Non-Code

TABLE 9.3-10b (Cont'd)

10. Strainer

Type	"Y" Type Mesh
Particle Size Retention	250 Microns
Operating Pressure, psig	2235
Operating Temperature, °F	621
Design Flow, gpm	2
Operating Flow (max) gpm	1
Clean ΔP (psig @ gpm)	2 @ 1
Loaded ΔP (psig @ gpm)	10 @ 1
Collapse ΔP (psig @ gpm)	70 @ 1

11. Gas Residence Chamber

Design Pressure, psig	130
Design Temperature, °F	350
Operational Pressure, psig	80
Operational Temperature, °F	120
Volume, cc	4600
Fluid	Post-Accident Reactor Coolant
Material	Stainless Steel 316L
Code	Non-Code

12. Exhaust Charcoal Filter

Type	Replaceable Cartridge
Type Element	Activated Charcoal
Design Flow, scfm	333
Operational Flow, scfm	250-333
Operational Pressure	Atmospheric
Fluid	Aux. Bldg. Atmosphere
Clean ΔP, inches water @ scfm	< 1 @ 333
Loaded ΔP, inches water @ scfm	1 @ 333
Code	Non-Code

TABLE 9.3-10c

DESIGN DATA FOR POST-ACCIDENT SAMPLING SYSTEM PROCESS INSTRUMENTS
(Historical)

Instrument	Description	Accuracy(1)	Range(1)
Boron Meter	Density Sensor		
Hydrogen Analyzer	Thermal Conductivity Sensor		
Oxygen Analyzer	Paramagnetic Sensor		
Dissolved Hydrogen Analyzer	Electrochemical sensor		

(1) Instrument ranges are selected in accordance with standard engineering practices. Instrument accuracies are selected such that existing instrument loop performance and safety analysis assumptions remain valid. Where applicable, instrument accuracies are also evaluated for their impact on setpoints in accordance with the FPL Setpoint Methodology.

TABLE 9.3-10d

INSTRUMENT CALIBRATION FREQUENCY

Component Identification	Calibration Frequency	Maintenance Frequency	Maintenance Calibration Technique
Charcoal Filter	-	as req'd	Replace filter when saturated, or when dosage is unacceptable (test with freon)
Pumps	-	as req'd	As required
Valves	-	18 mos	Functionally test and repair as required
Level Instruments	18 mos	-	Reset zero and span against known vessel levels
Pressure Instruments	18 mos	-	Check accuracy against a standard
Pressure Instruments with alarm & control functions	18 mos	-	Check pressure setpoints with alarm & control functions
H_2 & O_2 Meters	18 mos	-	Set zero and span using standard gases
Boron Meter	18 mos*	-	Check zero, span, and temperature compensator against test boron solution and demineralized water
Flow Meters	18 mos	-	Check accuracy against a standard
Panalarm	18 mos	-	Check alarm function
Dissolved H_2 Meter	90 days	as req'd	Calibrate in accordance with operation and maintenance manual

* Calibration check every six months during operability check. If found out of specification, then full calibration will be performed. Calibration frequency does not exceed 18 months.

TABLE 9.3-11

RCGVS SEISMIC CATEGORY I VALVE LIST

Valve No.	Description	Size (in.)	Type	Actuation Type
V1462	Reactor Vessel Vent isolation	1	Globe	Solenoid
V1463	Reactor Vessel Vent isolation	1	Globe	Solenoid
V1460	Pressurizer Vent isolation	1	Globe	Solenoid
V1461	Pressurizer Vent isolation	1	Globe	Solenoid
V1464	Quench Tank Vent isolation	1	Globe	Solenoid
V1465	Containment Vent isolation	1	Globe	Solenoid
V1466	Containment Vent isolation	1	Globe	Solenoid

TABLE 9.3-12

FAILURE MODES EFFECTS ANALYSTS FOR THE REACTOR COOLANT GAS VENT SYSTEM

No.	Name	Failure Mode	Cause	Symptoms and Local Effects Including Dependent Failures	Method of Detection	Inherent Compensating Provision	Remarks and Other Effects
1.	Pressure Indicator PI-1140	a. spurious high pressure indication	Instrument Drift	No impact on normal operation. Loss of ability to detect leakage into the the vent system piping.	Valve position indication in the control room.	None	Post-Accident venting is not affected
		b. spurious low pressure indication	Instrument Drift	No impact on normal operation. Loss of ability to detect leakage into the vent system piping.	Valve position indication in the control room.	None	Post-Accident venting is not affected.
2.	Quench Tank Isolation Valve V1464	a. Fails Open	Mechanical Binding, Seat Leakage	Inability to isolate quench tank from the reactor coolant gas vent system.	Valve position indication in the control room.	None	Redundant isolation valves to the reactor vessel and pressurizer preclude uncontrolled venting to the quench tank.
		b. Fails Closed	Mechanical Failure, Loss of Power	No impact on normal operation. Inability to vent pressurizer or reactor to quench tank.	Valve position indication in the control room. Operator.	None	Venting to the containment is possible, if necessary.
3.	Pressure Instrument Isolation Valves V1467 VPIS1140	a. Fails Open	Mechanical Binding, Seat Leakage	None	Operator.	Redundant Valves	
		b. Fails Closed	Mechanical Failure	Loss of ability to detect seat leakage from the pressurizer and reactor isolation valves into the reactor coolant gas vent system piping.	Operator	None	Unlikely events since valve is normally open and has only a manual operator.
4.	Containment Isolation Valve V1465 V1466	a. Fails Open	Mechanical Binding, Seat Leakage	Inability to isolate reactor coolant vent system from containment.	High containment pressure and humidity if venting is in progress. Valve position indication in the control	None	Redundant isolation valves to the reactor vessel and pressurizer preclude uncontrolled venting to the containment.

TABLE 9.3-12(Cont'd)

No.	Name	Failure Mode	Cause	Symptoms and Local Effects Including Dependent Failures	Method of Detection	Inherent Compensating Provision	Remarks and Other Effects
		b. Fails Closed	Mechanical Failure, Loss of Power to the Valve	No impact on normal operation. Inability to vent pressurizer or reactor to containment.	Valve position indication in the control room. Operator.	None	Venting to the quench tank if possible, if necessary.
5.	Pressurizer Vent Isolation Valve V1460 V1461	a. Fails Open	Mechanical Binding, Seat Leakage	No impact on normal operation. Inability to vent the reactor vessel without also venting pressurizer. This is satisfactory and will not impact natural circulation.	Valve position indication in control room. PI-1140 high pressure indication.	None	Redundant isolation valves to containment V1465 V1466 and quench tank V1464 precludes uncontrolled venting to the pressurizer.
		b. Fails Closed	Mechanical Failure, Loss of Power.	Inability to vent the pressurizer.	Valve position in the control room. Isolation valve. Operator.	Parallel redundant isolation valve.	Parallel isolation valve allow venting of the pressurizer.
6.	Reactor Vessel Vent Isolation Valve V1462 V1463	a. Fails Open	Mechanical Binding, Seat Leakage	No impact on normal operation. Unable to vent pressurizer without also venting the Reactor Vessel. This is satisfactory and will not impact natural circulation.	Valve position indication in the control room. PI-1140 high pressure indication.	None	Redundant isolation valves to containment V1465, V1466 and V1464 preclude uncontrolled venting of the reactor vessel.
		b. Fails Closed	Mechanical Failure, Loss of Power	Inability to vent the reactor vessel.	Valve position in the control room. Operator.	Parallel redundant isolation valve.	Parallel isolation valve allows venting of the reactor vessel.
7.	Position Indicator for V1462, V1463	False indication of valve position	Electro-mechanical failure.	Loss of ability to detect valve position in reactor vessel vent line.	Pressure gauge PI-1140 indication shows valve is opened.	None	
8.	Position Indicator for V1460, V1461	False indication of valve position	Electro-mechanical failure.	Loss of ability to detect valve position in pressurizer vent line.	Pressure gauge PI-1140 indication shows valve is opened.	None	

TABLE 9.3-12(Cont'd)

No.	Name	Failure Mode	Cause	Symptoms and Local Effects Including Dependent Failures	Method of Detection	Inherent Compensating Provision	Remarks and Other Effects
9.	Position Indicator for V1464	False Indication of valve position	Electro-mechanical failure	Loss of ability to detect valve position in quench tank vent line.	Quench Tank temperature and pressure verify valve position. Pressure gauge PI-1140.	None	
10.	Position Indicator for V1465, V1466	False Indication of valve position	Electro-mechanical failure	Loss of ability to detect valve position in containment vent line.	Containment pressure/humidity/ radiation levels verify containment valve position. Pressure gauge PI-1140	None	
11.	Drain Valves V1469, V1471 V1486	a. Seat Leakage	Contamination, Mechanical damage	No impact on system operation.	None	Drain valves are provided with secondary boundaries such as blind flanges.	
		b. Fails Closed	Mechanical Binding	No impact on normal operations. Inability to drain affected line section.	Operator	None	
12.	Accumulator isolation valve V1466	a. Fails Open	Mechanical Binding, Seat Leakage	Inability to isolate accumulator from containment.	High containment pressure and humidity if venting is in progress. Valve position indication in the control room	None	Redundant isolation valves to the reactor vessel and pressurizer preclude uncontrolled venting to the containment.
		b. Fails Closed	Mechanical failure, Loss of Power to the Valve	Inability to use accumulator for leak detection.	Valve position indication in the control room. Operator.	None	Venting to containment and quench tank still possible.

Refer to Dwg.
2998-G-085, SH. 1

Amendment No. 11,(5/97)

FLORIDA POWER & LIGHT COMPANY
ST. LUCIE PLANT UNIT 2

FLOW DIAGRAM
SERVICE AIR SYSTEM
FIGURE 9.3-1

Refer to Dwg.
2998-G-085, SH. 2A, B, C

Amendment No. 11,(5/97)

FLORIDA POWER & LIGHT COMPANY
ST. LUCIE PLANT UNIT 2

FLOW DIAGRAM
INSTRUMENT AIR SYSTEM
FIGURE 9.3-2

Refer to Dwg.
2998-G-085, SH. 3

FLORIDA POWER & LIGHT COMPANY
ST. LUCIE PLANT UNIT 2

FLOW DIAGRAM
INSTRUMENT AIR SYSTEM
FIGURE 9.3-2a

Refer to Drawing
2998-G-078 SH. 150

FLORIDA POWER & LIGHT COMPANY
ST. LUCIE PLANT UNIT 2

FLOW DIAGRAM
SAMPLING SYSTEM
FIGURE 9.3-3

Refer to Drawing
2998-G-078, SH. 153

FLORIDA POWER & LIGHT COMPANY
ST. LUCIE PLANT UNIT 2

FLOW DIAGRAM
SAMPLING SYSTEM
FIGURE 9.3-3a

Refer to Drawing
2998-G-078, SH. 152

FLORIDA POWER & LIGHT COMPANY
ST. LUCIE PLANT UNIT 2

FLOW DIAGRAM
SAMPLING SYSTEM
FIGURE 9.3-3b

Refer to Drawing
2998-G-092, SH. 2

FLORIDA POWER & LIGHT COMPANY
ST. LUCIE PLANT UNIT 2

FLOW DIAGRAM
MISCELLANEOUS SAMPLING SYSTEMS
FIGURE 9.3-4

Refer to Drawing
2998-G-092, SH. 6

FLORIDA POWER & LIGHT COMPANY
ST. LUCIE PLANT UNIT 2

SECONDARY SAMPLING SYSTEM

FIGURE 9.3-4a

Refer to Drawing
2998-G-078, SH. 120

FLORIDA POWER & LIGHT COMPANY
ST. LUCIE PLANT UNIT 2

FLOW DIAGRAM

CHEMICAL AND VOLUME CONTROL SYSTEM

FIGURE 9.3-5a

Refer to Drawings
2998-G-078, SH. 121A, B

FLORIDA POWER & LIGHT COMPANY
ST. LUCIE PLANT UNIT 2

FLOW DIAGRAM
CHEMICAL & VOLUME CONTROL SYSTEM
FIGURE 9.3-5b

Refer to Dwg.
2998-G-078, SH. 122

FLORIDA POWER & LIGHT COMPANY
ST. LUCIE PLANT UNIT 2

FLOW DIAGRAM
CHEMICAL & VOLUME CONTROL SYSTEM
FIGURE 9.3-5c

Refer to Drawings
2998-G-078 SH 160A & 162
2998-G-088 SH 1 & 2

FLORIDA POWER & LIGHT COMPANY
ST. LUCIE PLANT UNIT 2

FLOW DIAGRAM WASTE MANAGEMENT SYSTEM

FIGURE 9.3-6

Refer to Drawing
2998-G-078 SH 150

FLORIDA POWER & LIGHT COMPANY
ST. LUCIE PLANT UNIT 2

FLOW DIAGRAM SAMPLING SYSTEM

FIGURE 9.3-6a

Figure 9.3-7 has been deleted.

FLORIDA POWER & LIGHT COMPANY
ST. LUCIE PLANT UNIT 2

FIGURE 9.3-7

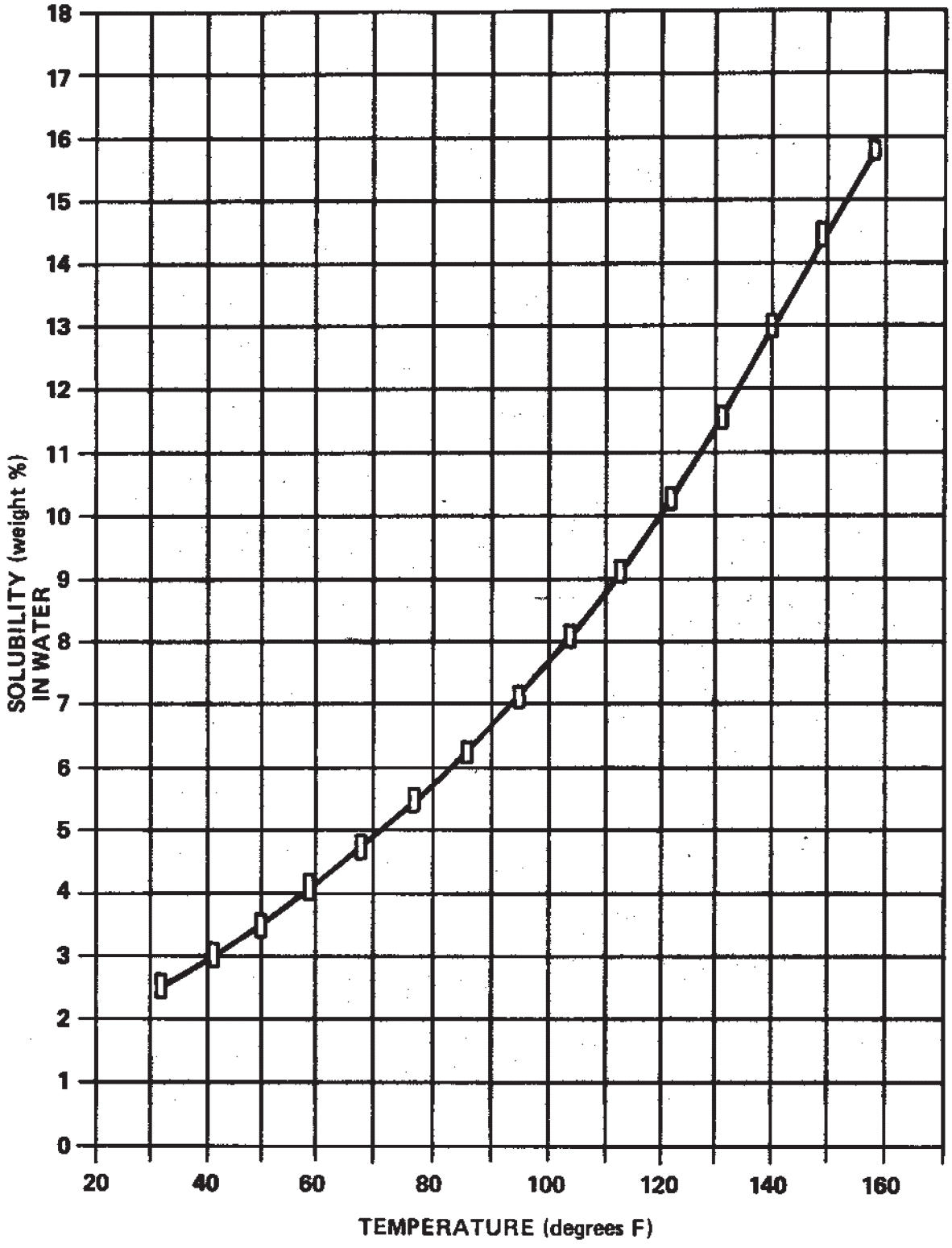

AMENDMENT NO. 5 (4/90)

FLORIDA POWER & LIGHT COMPANY
ST. LUCIE PLANT UNIT 2

BORIC ACID SOLUBILITY

FIGURE 9.3-8

9.4 AIR CONDITIONING, HEATING, COOLING AND VENTILATION SYSTEM

Heating, ventilating and air conditioning (HVAC) systems are provided throughout the plant as required for personnel comfort, personnel and general public health and safety protection, and for proper equipment operation.

The plant HVAC systems are arranged on distinct areas according to their functions and interfaces. Each distinct area is provided with a separate ventilation system whose design is commensurate with the importance of the area served and the potential for airborne fission product releases in the area.

In order to protect plant personnel and the general public against excessive exposure to radiation during normal plant operation, HVAC systems are designed so that: 1) potentially contaminated plant areas are purged with sufficient outside air so as to maintain airborne fission product concentrations below the maximum permissible concentrations of 10 CFR 20; 2) ventilation air patterns are directed from clean areas to areas of progressively higher airborne radioactivity; 3) ventilation air exhausted from potentially contaminated areas is filtered for the removal of particulates as required to satisfy Appendix I of 10 CFR 50, and 4) air exhausted from the Shield Building annulus, Fuel Handling Building and Reactor Auxiliary Building (main ventilation system) is first filtered, and then discharged to the environment through vent stacks in order to facilitate an overall measurement of gaseous releases and to prevent potential contamination of ventilation air intakes.

Outside air summer conditions used on the design of HVAC systems are 93°F dry bulb and 81°F wet bulb, which can be exceeded one percent of the time as indicated in ASHRAE Handbook of Fundamentals (1972).

9.4.1 CONTROL ROOM AIR CONDITIONING SYSTEM AND CONTROL ROOM EMERGENCY CLEANUP SYSTEM

The Control Room Air Conditioning System (CRACS) and Control Room Emergency Cleanup System (CRECS) are two of the systems required to assure control room habitability. The design of the control room envelope and other habitability systems are described in Section 6.4. The control room envelope boundary is shown in Figure 1.2-19.

9.4.1.1 Design Bases

The design bases for the Control Room Air Conditioning System and Control Room Emergency Cleanup System are as follows:

a. Control the environment in the control room envelope, for the comfort of control room personnel and to assure the operability of control components during normal plant operation, anticipated operational occurrences or abnormal occurrences.

b. Assure that no single active failure coincident with a loss of offsite power can result in loss of functional performance.

c. Maintain the control room envelope at an average positive pressure of 1/8 inch WG above that of the surroundings during normal plant operation and following a

loss-of-coolant accident (LOCA). According to Technical Specification Amendment 153, the definition of the Surveillance Requirement (SR) for CREACS to maintain a positive pressure of 0.125 inches water gauge relative to the outside atmosphere during the pressurization mode of operation at a makeup flow rate of 450 cfm is acceptable. This SR was deleted because measurements of unfiltered air leakage into the control room envelope at numerous facilities demonstrated that a basic assumption of this SR, an essentially leak-tight control room envelope boundary, was incorrect. Hence, meeting the SR by achieving the required control room envelope pressure is not necessarily a conclusive indication of control room envelope boundary leak tightness. The SR was replaced with a new inleakage measurement SR and a Control Room Envelope Program in accordance with the NRC-approved TSTF-448, Revision 3.

d. Provide means to limit the introduction of airborne radioactivity, smoke, toxic gases or steam to the control room envelope.

e. Provide air cleaning for the control room envelope atmosphere so that airborne radiological doses, experienced by control personnel following a design basis accident (DBA) do not exceed limits imposed by General Design Criterion 19.

f. Assure that makeup air brought in during an event that has resulted in control room isolation does not bypass the air cleaning process before it mixes with the control room envelope air.

g. Assure that essential portions of the systems and control components are protected against missiles (internal and external) and floods, and are designed to remain functional subsequent to a Safe Shutdown Earthquake.

h. Provide accessibility for adjustments, periodic inspections and testing of the system components to assure continuous functional reliability.

The safety and seismic classifications of components of the Control Room Air Conditioning and Control Room Emergency Cleanup Systems are given in Table 3.2-1. Protection against internal and external missiles is discussed in Section 3.5. Protection against the dynamic effects associated with postulated pipe rupture is discussed in Section 3.6. Environmental design criteria and qualification of components are discussed in Section 3.11.

9.4.1.2 System Description

The CRACS and CRECS air flow diagrams are shown on Figures 9.4-1 and 9.4-2. System component design data for the CRACS and CRECS are given in Tables 9.4-1 and 9.4-2 respectively.

9.4.1.2.1 Normal Operation

The Control Room Air Conditioning System consists of three 50 percent capacity air conditioners and a ducted air intake and air distribution system. Each air conditioner is located at elevation 62 feet and includes a cabinet type centrifugal fan, direct expansion refrigerant cooling coil, roughing filter, water cooled refrigerant condenser and refrigerant compressor. The Component Cooling Water System supplies water to the refrigerant condenser coils (refer to Subsection 9.2.2).

During normal operation, the control room is air conditioned by one of the three air conditioning units, HVA/ACC-3A, 3B, and 3C. One unit is normally running with the other unit in auto. The third unit is OFF, available for manual actuation in the event of a failure of the operating or standby unit. The normal operating conditions maintained in the control room are 75 ± 5°F and 50 ± 5 percent relative humidity.

Control room air is drawn into the air handling section through a return air duct system and roughing filters, and is cooled as required. Conditioned air is directed back to the control room through the supply air duct system. Outside air makeup is effected through either of two outside air intakes located in the northern and southern walls of the Reactor Auxiliary Building at elevation 78 ft. This makeup air replenishes the air exfiltrated to the outside in addition to that being exhausted by the toilet fan (HVE-14) and kitchen exhaust fan (HVE-33). The return air flowrate is controlled automatically by the return dampers (D-39 and 40) with its corresponding controller either in Auto or Manual control mode to maintain a constant positive pressure of ≥1/8 inch wg in response to the average pressure differential between the control room and its surroundings.

9.4.1.2.2 Emergency Operation

On receipt of a containment isolation actuation signal (CIAS) from either St. Lucie Unit 1 or Unit 2, the CRECS fans (HVE-13A and B) are automatically started and the charcoal filter train dampers are opened. Outside air intakes are isolated by the redundant low leakage butterfly valves FCV-25-14, -15, -16, and -17 located in the outside air makeup ducts. The kitchen and toilet exhaust ducts are isolated by redundant low leakage butterfly valves FCV-25-24 and -25, and FCV-25-18 and -19, respectively. A portion of the control room air is recirculated through the HEPA filters and charcoal adsorbers for removal of radioactive particles and iodine, respectively.

To facilitate operation of the CREC system on receipt of a containment isolation actuation signal (CIAS) from either St. Lucie Unit 1 or Unit 2, the Control Room Air Conditioner that is in AUTO is also automatically started and the running CRAC unit remains operating.

The control room outside air intakes are provided with duct mounted radiation detectors which monitor the outside air flow using a beta scintillation crystal. Upon receipt of a high radiation signal, isolation valves FCV-25-14, -15, -16 and -17 automatically close to prevent contaminated outside air from entering inside the control room and the CRECS fan automatically starts to provide HEPA and charcoal filtration to the supply air. Isolation valves for the kitchen and toilet exhaust are also isolated upon high radiation.

In the event of a CIAS or high radiation signal followed by a loss of offsite power, the outside air intake isolation valves are designed to fail as is and the CRECS fans stop. Outside air is not drawn into the control room because the control room is pressurized during normal operation and the coasting down fan is discharging against a positive pressure in addition to overcoming ductwork and damper frictional losses. When sequenced onto the diesel generator the valves automatically close and the CRECS fans and two CRAC fans are started.

Automatic isolation of the Control Room via CIAS or high radiation signal occurs within 30 seconds, with or without offsite power. This time includes instrument response time, valve closure time and EDG restoration of AC power if offsite power is not available.

By observing the radiation monitors located in the outside air intake ducts, the operator restores outside air makeup by selecting which set of valves to open. The radiation monitors are described in Subsection 12.3.4.

The Control Room Emergency Cleanup System removes potentially radioactive particulates and iodine from the control room air during the post-LOCA operating mode. Each unit consists of a roughing filter, HEPA prefilter, charcoal adsorber, HEPA afterfilter and fan. The system operates along with the CRAC system post-LOCA to maintain a positive control room pressure. The flow control valves, installed in each air intake, control the flow of air being drawn into the control room. Post-LOCA makeup flow enters through one of these ducts and passes through the charcoal filters. Thus, all makeup air is filtered.

The redundant air cleaning units remove radioactivity from the control room envelope atmosphere. The HEPA filters remove 0.3 micron particles from atmospheric air at an efficiency greater than 99.9 percent. The charcoal adsorbers have the radioactive removal efficiency of 99.825 percent minimum when tested in accordance with ASTM D3803-1989.

9.4.1.3 Safety Evaluation

During normal operation, the control room is air conditioned by one of the three air conditioning units, HVA/ACC-3A, 3B, and 3C. One unit is normally running with another unit in Auto. The third unit is OFF, available for manual actuation in the event of a failure of the operating or standby unit.

In postulating a single active failure of one 50 percent unit during normal condition and a second 50 percent unit out for maintenance, one 50 percent capacity unit is still available for cooling. With only one unit operating, the temperature of the control room is 100 FDB and 71 FWB based on 93 F outside ambient temperature and outside air intake of 750 cfm. Since the equipment within the control room is qualified for a higher temperature operation of one air conditioning unit during normal condition is acceptable. At this elevated temperature, the control room effective temperature (ET), (combination of temperature, humidity and air velocity) is 82 F. The ASHRAE Handbook of Fundamentals (1972) indicates that an ET of 85 F marks the upper permissible limit of occupancy for moderately hard work activities. An ET of 82 F is well tolerated during the usual 12 hour shift.

The CRACS is designed to control the environment assuming the simultaneous operation of all equipment located in the control room envelope coinciding with the highest site design ambient conditions. Under these assumptions, the system is capable of maintaining the environmental conditions of 80 ± 4 F and less than 70 percent relative humidity during an accident condition.

Components of the CRACS and CRECS, including the isolation valves and ductwork, are located within the control room envelope which is designed to seismic Category I criteria and to withstand the effects of natural phenomena and external missiles. The system components and ductwork are seismically designed, qualified and erected in accordance with the seismic design measures of Section 3.7 and the quality group classifications of Table 3.2-1. Unfiltered in-leakage paths through the isolation valves are reduced by using low leakage butterfly valves as indicated on Table 6.4-1.

The systems contain three redundant air conditioning and two redundant air cleaning trains, with separate power supplied for each train. The trains are automatically powered by the emergency diesel generators in accordance with the diesel loading sequences outlined in Section 8.3.

Instrumentation and control of the redundant trains are separated. No single active failure in the system, coincident with loss of offsite power, can prevent the system's ability to function. A failure modes and effects analysis is presented in Table 9.4-3.

As described in Section 6.4, the type of control room system provided is zone isolation with filtered recirculated air, widely separated dual air inlets, and provisions for positive pressurization. Makeup air for pressurization is filtered before entering the control room. The design of the filtration units meet the intent of Regulatory Guide 1.52, "Design, Testing, and Maintenance Criteria for Post Accident Engineered-Safety-Feature Atmosphere Cleanup System Air Filtration and Adsorption Units of Light-Water-Cooled Nuclear Power Plants," 3/78 (R2) as shown in Table 6.5-1. The recirculation air cleaning flowrate is designed to maintain airborne radiation doses below the requirements of Appendix A to 10 CFR 50.

Based on a control room volume of 97,600 cubic feet (which conservatively includes space above the hung ceiling and adjacent offices), 0.953 air changes per hour of recirculated air and 0.277 air changes per hour of makeup air is passed through the filters.

The total infiltration of outside air to the isolated control room via doors, penetrations, isolation dampers, roof and walls was originally calculated to be 100 cfm with a 1/8 inch WG differential across all openings (see Section 6.4); this was more than the Staff's limit of 0.06 air changes per hour (equivalent to 97.6 cfm). The control room is pressurized via the air intake lines and charcoal filters so as to preclude inleakage. The inleakage rates are relevant to the pressurization capability and are discussed in Section 6.4.2.3.

The control room operator has the ability, through radiation monitors, to determine radiation levels in each of the outside air intake ducts. Two additional radiation monitors are provided in the control room and an airborne monitor is provided in the recirculation duct. Upon receipt of a high radiation alarm with no CIAS present, the charcoal filter train dampers are automatically open and the CRECS fans are automatically started. For additional information concerning area radiation and airborne radioactivity monitoring instrumentation refer to Subsection 12.3.4.

Unit 1 UFSAR Sections 6.4 and 12.2 provide discussion of the time to reach the CO_2 limit in the Unit 1 control room. The applicable calculations are based on a control room volume of 62,700 cubic feet, as well as the assumption that there are ten operators in the control room. The assumption that there are ten operators in the Unit 1 control room is no longer accurate since the addition of the Technical Support Center to the control room envelope, however, it is an applicable assumption for Unit 2. The calculations are linear and a ratio of these time estimates can be performed for a larger control room. The time to reach the limit would be increased to approximately 96 hours. The CROAI valves would be opened prior to reaching this limit.

Heat and toxic gas protection are discussed in Section 6.4.

Administrative controls are provided for all doors leading to the control room to be closed when not in use. Piping and cable tray penetrations are sealed against the concrete wall. Electrical raceways are sealed against inleakage by means of air-tight fire stops.

The presence of toxic chemicals, storage locations, maximum amount in storage and frequency of shipments are site related and are discussed in Section 2.2. Pursuant to General Design Criterion 19, the plant can also be brought to a safe shutdown by using the hot shutdown panel located external to the control room (see Subsection 7.4.1).

9.4.1.4 Inspection and Testing Requirements

Manufacturers tests included:

a. pressure testing of filter casings at positive pressure of two psig and negative pressure of 15 inch wg vacuum for distortion,

b. leak testing of casings at 15 in. wg vacuum,

c. performing filtration tests to verify filter design performance for filtration, air flow capacity, air flow resistance, moisture and overpressure resistance and shock and vibration, and

d. verifying charcoal adsorbers design efficiency.

Preoperational tests were performed on the systems to ensure meeting performance and design basis requirements. Automatic and manual sequences were tested to ensure proper operation. Each air cleaning unit was tested during the preoperational period and regularly thereafter to verify that the unit meets the particulate filtration, iodine adsorption and leaktightness requirements.

Each air cleaning unit is equipped with the necessary sampling ports, instruments taps, etc. to permit:

a. The DOP testing of the HEPA filter sections in accordance with the recommendations of ANSI Standard N510-1980.

b. Leak-testing the charcoal adsorber section with a gaseous halogenated hydrocarbon refrigerant in accordance with the recommendations of ANSI N510-1980.

c. Leak-testing of the filter housings in accordance with the recommendations of ANSI N510-1980.

The efficiencies of the charcoal adsorbers were determined by laboratory testing of representative samples of the adsorbent exposed simultaneously to the same service conditions as the adsorber section. A sufficient number of representative samples located in parallel with the adsorber section were provided. The design of the samples was in accordance with the recommendations of Appendix A to ANSI N509-1976.

Periodic surveillance requirements for the CRACS and CRECS are a part of the Technical Specifications.

9.4.1.5 Instrumentation Requirements From the Outside Air Intake

The air conditioners, CRECS fans and outside air intake valves are controlled by remote manual operation in the control room. The outside air intake valves can also be opened or closed by manual operation. CIAS and/or a high radiation actuation signal automatically closes the outside air intake valve, kitchen and toilet exhaust and starts the CRECS fan. Air flow through the units is monitored and loss of flow conditions is annunciated. Positions of air intake isolation valves, fan inlet dampers and filter inlet damper are indicated in the control room, and control room pressure indication is provided. Table 9.4-4 lists the measured parameters for monitoring

the performance of the CRECS and CRACS. CRECS and CRACS are safeguard support systems and their actuation (CIAS) is discussed in Subsection 7.3.1.

9.4.2 FUEL HANDLING BUILDING VENTILATION SYSTEM

The Fuel Handling Building Ventilation System consists of two supply systems and two exhaust systems. The system flow diagram is shown on Figure 9.4-1. The system control diagram is shown on Figure 9.4-11. System component design data are given in Table 9.4-5.

9.4.2.1 Design Bases

The Fuel Handling Building Ventilation System is designed to:

a. direct airflow from areas of low potential radioactivity to areas of progressively higher potential radioactivity, prevent accumulation of airborne radioactivity in the Fuel Handling Building.

b. maintain a negative pressure with respect to outside area when all outside doors are closed,

c. limit offsite effluents from fuel pool area during normal operation by removing airborne radioactive particulates through HEPA filtration,

d. via bypass through the SBVS, limit the offsite exposures resulting from a fuel handling accident to within the guidelines established for design basis accidents assuming a single active failure,

e. ensure that the portion of the Fuel Handling Building Ventilation System required to mitigate the consequences of a fuel handling accident is designed to remain functional subsequent to a SSE.

f. provide accessibility for adjustments and periodic inspections and testing of the system components to assure continuous functional reliability, and

g. provide ventilation to maintain acceptable environmental conditions.

A discussion of the radiation monitoring system and the monitoring of normal and abnormal radiation levels within the Fuel Handling Building is presented in Subsection 12.3.4. Missile protection is discussed in Section 3.5, and protection against pipe rupture is discussed in Section 3.6.

9.4.2.2 System Description

9.4.2.2.1 Normal operation

During normal operation, the Fuel Handling Building is ventilated by the supply air systems HVS-6 and HVS-7 and exhausted by HVE-15 and either HVE-16A or 16B.

Each supply system consists of a hooded wall intake and air handling unit with roughing filters, fan section, and a duct distribution system. One system (HVS-6) supplies air to the fuel pool area including the fuel storage area, and the other system (HVS-7) supplies air to the balance of

the Fuel Handling Building, excluding the HVAC equipment room. The HVAC equipment room is ventilated by a separate exhaust fan (HVE-17).

The fuel pool area air is exhausted through air inlets around the periphery of the fuel pool. Air is passed through a prefilter and HEPA filter bank before being discharged by either one of two 100 percent capacity centrifugal fans (HVE-16A or 16B) to the atmosphere via the Fuel Handling Building vent stack.

Air exhaust from the Fuel Handling Building equipment area is passed through a prefilter and HEPA filter bank before being discharged by a centrifugal fan (HVE-15) to the atmosphere via the Fuel Handling Building vent stack.

Compliance of the Fuel Handling Building exhaust filtration units (HVE-15, HVE-16A and 16B) to Regulatory Guide 1.140, "Design, Testing, and Maintenance Criteria for Normal Ventilation Exhaust System Air Filtration and Adsorption Units of Light-Water-Cooled Nuclear Power Plants," 10/79 (R1) is described in Table 9.4-16.

During normal operation the Fuel Handling Building air temperature is kept below 104°F.

9.4.2.2.2 Emergency Operation

The Fuel Handling Building Ventilation System (portion of system for spent fuel pool ventilation) is interconnected with the Shield Building Ventilation System (SBVS). In the event of a high radiation signal, the fuel pool area is exhausted to the plant vent via the SBVS filters. The SBVS design is in accordance with the guidance provided by Regulatory Guide 1.52 (R2), as indicated in Subsection 6.5.1 and discussed in Subsection 6.2.3.

An inflatable seal is provided around the cask area shield door to minimize leakage. This seal is designed to remain functional during a safe shutdown earthquake. Two Quality Group C check valves are provided on the air supply line to the seal to prevent deflation on the occurrence of a single active failure coincident with a loss of offsite power.

The radiation monitoring system alarms in the control room upon an alert or high radiation signal. Upon receipt of a high radiation signal in the fuel pool exhaust, the following occurs (see Figure 9.4-11):

a. The supply and exhaust fans (HVS-6 and HVS-7, HVE-15 and HVE-16A or 16B) for the normal Fuel Handling Building ventilation are deenergized. The motorized dampers (D-29 through D-36) for the supply and exhaust building penetrations close. Exhaust fan HVE-17 automatically de-energizes.

b. The normally closed butterfly valves FCV-25-30 and FCV-25-31 open.

c. The normally open butterfly valves FCV-25-32 and FCV-25-33 close.

d. Shield Building Ventilation System fans HVE-6A and 6B automatically start and draw air through the spent fuel pool area exhaust line.

e. Since each train is 100 percent capacity, the operator has the capability from the control room HV control board, to put on standby one of the SBVS fans manually while the other fan continues to run.

f. During the initial venting period, the SBVS flow control damper (D-23 or D-24) is fully open. When differential pressure is established, the damper is energized to partially close to provide rated flow through the filters.

g. Redundant differential pressure transmitters operate pressure differential indicating switches to open the two position butterfly valves (FCV-25-11 or FCV-25-12) mounted in the outside air makeup line of the operating SBVS train when the spent fuel pool area to outside air differential pressure is established. The transmitters are located in the fuel pool area, read out in the control room and annunciate high and low differential pressure.

   The self-regulating check valves (V-25-23 and V-25-24) located downstream of the butterfly valve in the SBVS outside air cooling line open when required to prevent the differential pressure from exceeding -3 in. wg.

9.4.2.3 Safety Evaluation

The fuel pool exhaust ductwork, the supply and exhaust motorized isolation dampers, and the ductwork of the fuel pool exhaust line to the SBVS are seismic Category I and Quality Group C, while the remaining supply and exhaust ductwork is nonseismic and nonsafety related.

Each area serviced by the system is analyzed during design to assure that air flows are directed from areas of lower radioactive concentrations to areas of higher concentrations when all outside doors are closed.

Air is supplied to the fuel pool area from approximately 20 ft. above the floor elevation, forcing migration of the air downward to the fuel pool surface. The amount of air supplied, being less than that exhausted, prevents out-leakage from the fuel pool area to the equipment spaces within the building and to the environment, when the L-shaped door and other doors are kept closed.

The safety related dampers of the Fuel Handling Building Ventilation System are designed to satisfy the single failure criterion. Redundant trains are powered from separate safety related buses A and B so that in the event of a single failure in one train, the other safety related bus provides power to its associated train which operates and provides the safety function.

FCV-25-32 and 33 are subject to the requirements of the NRC Generic Letter 89-10 Program.

Upon receipt of a high radiation signal from the fuel pool area, the fail closed isolation damperslocated at fuel pool area ventilation penetrations automatically close, the normal ventilation systems are de-energized and the SBVS is actuated. The SBVS evacuates the air from the fuel pool area and provides charcoal and HEPA filtration. The SBVS evacuation of the fuel pool air area ensures a negative pressure in that area to preclude unfiltered leakage of radioactivity to the environment. The redundant isolation dampers on the supply and exhaust building penetrations ensures that no set of circumstances could cause air to be evacuated from the fuel pool area other than through the SBVS.

A CIAS (either before or after the high radiation signal) also ensures that the SBVS evacuates the Shield Building annulus space. This is accomplished by automatically closing valves FCV-25-30 and -31 and automatically opening valves FCV-25-32 and -33 when the CIAS overrides the high radiation signal. Thus for a postulated fuel handling accident inside

containment, any potential radioactivity release is filtered by the SBVS. The locations of these valves with respect to SBVS and FHB ventilation systems is shown on Figures 9.4-1 and 9.4-11.

In addition to the Fuel Handling Building being designed to withstand externally generated missiles, the outside air intakes for the ventilation systems are provided with a concrete labyrinth while the air exhaust is vented through a stack, which minimizes the probability of the entrance of external missiles.

9.4.2.4 Inspection and Testing Requirements

Preoperational and functional testing are described in Section 14.0 and the Technical Specifications, respectively.

9.4.2.5 Instrumentation Requirements

Radiation monitors are provided in the Fuel Handling Building exhaust vent stack which annunciate in the control room upon the receipt of a high radiation level. The radiological considerations of normal system operation are as discussed in Subsection 12.1.2.2.

Seismic Category I redundant radiation monitors (see Subsection 12.3.4) are installed in the spent fuel pool area. A high radiation signal from the fuel pool area causes the Fuel Handling Building Ventilation System fans to de-energize, isolates the Fuel Handling Building, and energizes the SBVS. This radiation monitoring system alarms both locally and in the control room at the alert radiation level. A high radiation signal from the FHB starts both exhaust fans HVE-6A and 6B. Normally the exhaust fan dampers (D-23 and D-24) are fully open. At 0.20 in. wg. negative differential pressure signal from PDS-25-17A, 17B (spent fuel pool area), the dampers partially close to reduce the airflow. Upon receipt of two in. wg. negative differential pressure signal from spent fuel pool area (PDS-25-17A & 17B), the outside cooling air inlet valves (FCV-25-11 and 12) automatically open.

Local differential pressure indicators are provided in each filter section. Flow switches are provided in each exhaust duct and low flow alarms annunciate in the control room.

The Fuel Handling Building supply air fan (HVS-7) is interlocked with the exhaust fan (HVE-15) and started manually by a local push button.

The fuel pool area supply fan (HVS-6) is interlocked with the exhaust fans (HVE-16A and 16B) and started manually from the control room. Flow from the operating fans are monitored and if required the SBVS fans are started manually from the control room following flow failure.

The seismic Category I motor operated dampers and isolation valves have position indicating lights in the control room.

9.4.3 REACTOR AUXILIARY BUILDING VENTILATION SYSTEMS

The Reactor Auxiliary Building Ventilation Systems consist of the main ventilation and various auxiliary systems which are shown on Figure 9.4-1. The control diagrams are shown on Figure 9.4-2.

The ventilation systems serving the Reactor Auxiliary Building (RAB) are as follows:

a. RAB Main Ventilation System

b. RAB Electrical Equipment and Battery Room Ventilation System

c. RAB Miscellaneous Ventilation Systems

d. ECCS Area Ventilation System.

9.4.3.1 Design Bases

The Reactor Auxiliary Building Ventilation Systems are designed to:

a. provide ventilation to permit proper functioning of equipment during normal operation,

b. provide air flow from areas of low potential radioactivity to areas of progressively higher potential radioactivity (with exterior doors closed),

c. provide an air supply for cooling of safety related equipment assuming a single active failure coincident with loss of offsite power,

d. withstand safe shutdown earthquake loads without loss of capability of cooling safety related equipment required for a safe Shutdown.

e. prevent the accumulation of a combustible concentration of hydrogen in the battery rooms during normal and accident conditions,

f. assure that occupational radiation exposure, resulting from airborne contaminants that may be present from the ECCS area and radwaste processing equipment and piping, is maintained within 10 CFR 20 guidelines, as applied by Regulatory Guide 8.8, "Information Relevant to Ensuring that Occupational Radiation Exposures at Nuclear Power Stations will be as Low as is Reasonably Achievable," (6/78) (R3).

g. assure that the ventilation system operation during normal operation does not cause an annual offsite release of gaseous radioactivity from the plant to exceed limits allowed by 10 CFR 50, Appendix I, and

h. permit periodic testing and inspection of principal components.

In addition to the above design bases, the Emergency Core Cooling System (ECCS) Area Ventilation System is designed to:

a. Provide high efficiency particulate filtration and iodine adsorption for air exhausted from ECCS areas following a DBA-LOCA and limit the post accident radiological doses below the guidelines established for design basis accidents, and

b. create and maintain a slightly negative pressure relative to surrounding areas assuming a leakage in the ECCS areas from pump seals, or valve stems, and

c. Limit the temperature rise and provide post-LOCA filtration and adsorption of fission products in the exhaust air from the following areas:

    1. ECCS pump rooms
    2. Heat exchanger rooms
    3. Penetration area

The discussion of the radiation monitoring system and the monitoring of normal and abnormal radiation levels within the Reactor Auxiliary Building is presented in Subsection 12.3.4.

In addition to the Reactor Auxiliary Building being designed to withstand externally generated missiles, the outside air intakes and exhausts for ventilation systems are provided with concrete labyrinths or structural steel to preclude the entrance of external missiles (refer to Section 3.5).

9.4.3.2 System Description

9.4.3.2.1 RAB Main Ventilation System

The RAB Main Ventilation System consists of a redundant air supply system (HVS-4A and 4B) and a redundant air exhaust system (HVE-10A and 10B). Air supply is effected through wall louvers, roughing filters, two 100 percent capacity centrifugal fans (HVS-4A and 4B) and duct distribution systems. Component data are given in Table 9.4-6.

The air supply is designed to Quality Group C and seismic Category I requirements, under loss of normal power, the supply fans are automatically connected to the emergency diesel generator sets.

The air exhaust system includes a 100 percent capacity bank of prefilters and HEPA filters, two 100 percent capacity exhaust fans (HVE-10A and 10B) and duct exhaust systems. The exhaust system serves no safety function. Compliance of the RAB main exhaust filtration unit (HVE-10A and 10B) to Regulatory Guide 1.140 (R1) is delineated in Table 9.4-16. Under accident conditions, the ECCS areas are supplied and exhausted by the ECCS area ventilation system described in Section 9.4.3.2.4.

The supply and exhaust fans can be started/stopped by the operator from the control room or local pushbutton station. During accident conditions, the other redundant supply fan (HVS-4A or 4B), is started automatically on an SIAS. Operator intervention is required to place one fan on a standby mode.

The RAB Main Ventilation System provides a minimum of four air changes per hour for each of the rooms in the building. Ventilation rate is sized to limit the temperature to the design ambient maximum temperature of 104°F in the equipment areas (excluding ECCS areas during accident conditions, see Section 9.4.3.2.4) assuming an outside air temperature of 93°F.

The exhaust from potentially contaminated areas is discharged to the plant vent. Refer to Section 12.3 for a discussion of the Reactor Auxiliary Building radiation monitoring system.

9.4.3.2.2 RAB Electrical Equipment and Battery Room Ventilation System

The electrical equipment rooms (2A, 2B and 2C areas) and battery rooms 2A and 2B (all located at elevation 43 feet) are ventilated by a system which includes a louvered intake, filters, two redundant supply fans (HVS-5A and 5B), a duct distribution system, and exhaust fans.

Equipment area 2A is exhausted by power roof ventilators RV-3 or RV-4. Equipment areas 2B and 2C are exhausted through fans HVE-11 or HVE-12. Battery rooms 2A and 2B are exhausted by roof ventilators RV-1 and RV-2, respectively.

In the event of a failure of one supply or exhaust fan, a low discharge flow alarm annunciates in the control room, and the operator starts the second fan if it is not already running.

Upon loss of offsite power, the system is automatically connected to the emergency diesel generator sets. Each electrical equipment room exhaust fan is connected to separate emergency buses, as are the battery room exhaust fans. The supply fans are similarly connected to separate buses.

Ventilator air flow rates for the electrical and battery rooms are sized to achieve a temperature less than 104°F assuming an outside air temperature of 93°F. Electrical equipment room temperatures exceeding 110°F are annunciated in the control room.

The electric equipment room high temperature and battery room vent air supply low flow alarms have redundant channels and alarms for operator indication. Alarms are electrically independent of the HVAC systems so that the failure of the HVAC system will not disable the operability of the alarming system.

The RAB Electrical Equipment and Battery Room Ventilation System is designed to Quality Group C and seismic Category I requirements. EC287236

System component design data are given in Table 9.4-6.

9.4.3.2.3 RAB Miscellaneous Ventilation Systems

The radiological cold and hot areas of the RAB on elevation 19.5 feet are air conditioned by package units HVA/ACC-15 and HVA/ACC-16 and locally exhausted by fans HVE-4 and HVE-5, respectively. Air from locker room personnel areas that is clean is exhausted directly to the atmosphere by HVE-4. Air from locker room personnel areas that is hot is passed through a prefilter and HEPA filter before being vented locally by HVE-5. HVE-4 and HVE-5 and discharge dampers (fail open) L-5 and L-6 are interlocked together. A single combination cooling/heating two-step thermostat will maintain the facility temperature at 80°F DB in the summer and 68°F DB in the winter. The control of HVE-4 and HVE-5 operates directly from the MCC and are not interlocked with the air conditioning units.

The laboratory supply and storage room, first aid room and health physics office are serviced by a packaged heat pump HVA/ACC-2. The packaged heat pump provides ventilation, filtration and cooling during the summer and heating during the winter. The health physics station, counting room, instrument calibration and repair shop, and radiochemistry lab are serviced by a packaged air conditioning unit HVA/ACC-1. A portion of the air is exhausted through the laboratory hoods in the radiochemistry laboratory and the balance is recirculated through a packaged air conditioning unit. Air is also exhausted from the first aid toilet room through exhaust fan HVE-25.

The tank room is ventilated and exhausted by a wall propeller fan HVE-24 at elevation 62 feet. EC284572
The fan operation is controlled via a temperature switch set at 80°F with an 8°F differential.
Makeup air is effected through an outside air intake hood. The elevator control room is EC284572
ventilated and exhausted by a through wall air conditioning unit, TWU-8, at elevation 62 feet.

The fan is automatically operated and set to maintain the elevator control room at 80°F. The main purpose of the through wall air conditioning unit is to provide humidity control. The component data for these non-safety systems are given in Table 9.4-6.

The Static Inverter Room, containing “A” Train equipment, is located within the 2B EER Room. The Static Inverter Room is air conditioned by an independent 100% capacity split system. Air handler HVA-4 is located within the Static Inverter Room and Air Cooled Condenser ACC-4 is located on the 62’ Deck between the RAB and TGB. HVA-4/ACC-4 is designed as a backup cooling system for equipment located in the Static Inverter Room in the event room temperature increases above 93°F. This is not expected to occur unless there is a fire in the 2B EER Room or on a loss of ventilation supply. The design capacity of HVA/ACC-4 is designed to be sufficient to maintain Static Inverter Room temperature less than 104°F during a fire in the “B” Electrical Switchgear Room. The 104°F temperature limit was originally based on the maximum operating temperature of the “A” and “C” Inverters. Subsequently, the inverters were replaced with inverters designed to operate at temperatures up to 122°F. HVA-4/ACC-4 is automatically loaded on the “A” Emergency Diesel Generator. The component data for this system is provided in Table 9.4-6. EC287236

The Control Element Drive Mechanism Control System (CEDMCS) equipment enclosure, located in the cable spreading room (2C EER) inside the RAB on elevation 43 feet, is air conditioned by two independent 100% capacity split systems. The air handlers HVA-5A, 5B are located locally and the condensing units ACC-5A, 5B are located above Turbine Building Battery Room 2D. The system is designed to maintain the CEDMCS enclosure ambient temperature less than 70°F because past experience has shown that CEAs start to exhibit problems when the CEDMCS enclosure temperature is above 70°F. This air conditioning system also provides cooling air to the ERDADS enclosure under normal operating conditions. Two (2) standby through wall units (TWU-5, 6) are provided as backup to maintain the ERDADS enclosure at approximately 80°F in the event of a loss of normal cooling. The back-up ERDADS A/C units are powered from redundant non-safety power sources which are automatically loaded onto their respective diesel generators. The ERDADS enclosure contains the Unit 2 isolation and plant data concentrator equipment shown on UFSAR Figures 7.5A-1 and 7.5A-2. The component data for this system is provided in Table 9.4-6. EC287236

9.4.3.2.4 ECCS Area Ventilation System

The ECCS Area Ventilation System component data are given on Table 9.4-7.

The air exhaust system consists of two redundant centrifugal exhaust fans (HVE-9A and 9B), HEPA and charcoal filter banks, and associated ductwork, dampers, and controls. The exhausted air is vented to the outside atmosphere.

The ECCS pump area, shutdown cooling heat exchanger area, and HPSI pump area are exhausted by (2) redundant safety-related exhaust fans HVE-9A, and HVE-9B. As shown on Figure 9.4-2, the exhaust air route is directly via the exhaust duct to exhaust fan HVE-9A, and via the pipe tunnel to exhaust fan HVE-9B. The single failure criterion is met for the ECCS area ventilation system as follows: in the event that exhaust fan HVE-9A fails, the redundant exhaust fan HVE-9B exhausts the air from the pump and heat exchanger area via the common pipe tunnel. When HVE-9A is out of service, a damper (D-14) closes directly upstream of this exhaust fan, thus preventing air from being drawn through the nonfunctioning fan.

Under normal operation, the Reactor Auxiliary Building Main Ventilation System provides the necessary ventilation of the ECCS pump rooms as described in Section 9.4.3.2.1. Under accident conditions when several or all of the pumps are operating, the air supply (HVS-4A,B) to the nonessential section of the Reactor Auxiliary Building is directed to the pump rooms to provide the additional cooling air requirement. The ventilation air flow rate is sized to maintain an ambient temperature at or below 120°F in the ECCS equipment areas during accident operating conditions. Dampers are positioned automatically on SIAS signal to provide the proper flow path for supply air to the ECCS area. Simultaneously, the exhaust fans (HVE-9A and 9B) are automatically energized and dampers in the exhaust ductwork are automatically positioned to allow the fans to draw all exhaust air from the areas through the HEPA and charcoal filter bank before discharge to the atmosphere. Table 9.4-8 lists the system components actuated on SIAS and gives the control function of the SIAS on these components.

The ventilation system is sized to maintain a negative pressure in the ECCS area with respect to surrounding areas of the Reactor Auxiliary Building. Access into the ECCS area from other parts of the Reactor Auxiliary Building is through gasketed self closing or locked closed doors. Opening of locked doors is under administrative controls.

Piping penetrations into the enclosed area are provided with flexible seals which limit the amount of in-leakage. The seals permit differential movement between the piping and the wall due to thermally or seismically induced motion.

9.4.3.3 System Evaluation

RAB ventilation systems required for the operation of safety related components meet the same requirements for redundancy, independence, emergency power, quality assurance, and natural phenomena protection as the safety system which they serve. Table 3.2-1 specifies the Quality Group and seismic classifications, as well as the flood and missile protection provided for these components.

Where redundant safety related components (such as emergency electrical switchgear and ECCS area require ventilation for proper operation, the redundant components are served by two redundant ventilation fans and associated dampers and controls. In this way failure of a single active ventilation component cannot affect the proper functioning of the redundant safety related components. The inlet louvers provided on HVAC systems are fixed and cannot fail in a closed position. Each of the redundant ventilation components and its controls are powered from a separate emergency bus which is part of the same emergency electrical load group as the components which it serves.

The ventilation system components required to perform safety functions are designed and installed as seismic Category I equipment and are located in seismic Category I structures. Test and calculational data verifies the capability of the equipment to function during and following a safe shutdown earthquake (see Section 3.10).

Each battery room ventilation rate has been sized to avoid buildup of hydrogen.

Dampers connecting the ECCS Area Ventilation System, with non-essential parts of the RAB Ventilation System fail in the closed position upon loss of control air or power. Dampers which align flow from the area through the charcoal filter train and exhaust fans fail in the open position.

The ECCS Area Ventilation System is sized to maintain a slightly negative pressure in the ECCS area with respect to surrounding areas of the Reactor Auxiliary Building. Ductwork conveying air to the HEPA and charcoal filters are also at a negative pressure. Upon loss of normal power, the system, is automatically connected to the emergency power source. The fans and dampers associated with each of the separate filter trains are powered from, separate buses and receive actuation signals from separate SIAS channels. The ECCS pump rooms and shutdown cooling heat exchanger rooms are serviced by both fans HVE-9A and 9B. The duct connecting the pipe tunnel to HVE-9A is sized to handle 30,000 CFM and is used in conjunction with pipe tunnel, as a plenum, to exhaust air from ECCS pump rooms and shutdown cooling heat exchanger rooms by the redundant fan HVE-9B. Therefore, no single failure prevents the ECCS exhaust system from operating. A failure modes and effects analysis is presented in Table 9.4-9.

Charcoal filter components of the ECCS Area Ventilation System receive factory and fluid tests similar to those described for the Shield Building Ventilation System in Subsection 6.2.3. Table 6.5-1 provides a comparison of the ECCS Area Ventilation System, filtration units with the recommendations of Regulatory Guide 1.52 (R1).

Offsite radiological releases during normal operation resulting from the RAP ventilation systems operation are maintained within the limits of 10 CFR 50 Appendix I. The exhaust air released through the plant vent stack was originally provided with isokinetic sampling connections for radioactivity sampling (refer to Subsection 12.3.4). However, Engineering Evaluation PSL-ENG-SENS-05-033 documents that isokinetic sampling is not necessary to achieve representative sampling in this application.

9.4.3.4 Inspection and Testing

Manufacturer's test include:

a. performing filtration tests to verify filter design performance for filtration, air flow capacity, air flow resistance, moisture and overpressure resistance, shock and vibration,

b. verify charcoal adsorber design efficiency.

Functional testing for the ECCS Area Ventilation System is described in the Technical Specifications.

9.4.3.5 Instrumentation Application

Table 9.4-10 lists the parameters used to monitor and control the RAB Ventilation Systems operation. Pressure differentials across HEPA filters and filter train are indicated and recorded, and high pressure differential is annunciated in the control room. The air temperature entering and leaving the filter train and the charcoal bed temperature are recorded. High charcoal bed temperature is annunciated in the control room. Air flow through the filter train is indicated and recorded in the control room. The ECCS pump room high temperature alarms are electrically independent of the HVAC systems so that the failure of the HVAC system does not disable the operability of the alarming system.

Low air flow from, exhaust fans HVE-9A and 9B is annunciated in the control room. Both exhaust fans are automatically started on SIAS, but the operator can manually shut one fan

down and place it on standby. On a low flow alarm, the operator manually starts the standby fan. Table 9.4-8 lists the ECCS Area Ventilation System components that are actuated by the SIAS signal and lists the HVAC control functions of the SIAS.

9.4.4 TURBINE BUILDING VENTILATION SYSTEM

The Turbine Building is an open structure with no mechanical ventilation system for the equipment areas. Equipment in the open areas is ventilated by natural ventilation. The enclosed condensate storage tank, located beside the Turbine Building, is provided with a missile protected opening on top of the dome for natural ventilation. Makeup air is effected through two labyrinth doors on the ground floor.

The Turbine Building switchgear room, which is totally enclosed, is provided with a filtered air supply system. Supply fans HVS-18 and HVS-19 in combination with high efficiency filters provide a saline and dust free environment for the switchgear. Component design data is given in Table 9.4-11 and the air flow and control diagram is shown on Figure 9.4-9.

The chemical storage room, which is enclosed is ventilated by a wall mounted supply fan. Component design data for this room is given on Table 9.4-11. The air flow and control diagram is shown on Figure 9.4-9.

9.4.4.1 Design Basis

The Turbine Building Ventilation System is designed to:

a. provide ventilation to permit proper functioning of equipment during normal operation in the switchgear room and chemical storage room,

b. permit periodic inspection and testing of system components, and

c. provide the switchgear room with a saline free and dust free environment and maintain a slight positive pressure within the room.

9.4.4.2 System Description

The Turbine Building switchgear room ventilation system includes two (2) filtered air supply units HVS-18 and HVS-19, ductwork, and a relief air system. Each train includes a filter housing with a louver, prefilters, high efficiency filters, a centrifugal fan, and a backdraft damper. Each supply fan provides filtered supply air into a common ductwork system. This arrangement allows a single fan train to supply air to both the A and B sides of the switchgear room at 50% of the required air flow. Operation of both supply air systems delivers 15,000 CFM of clean air Into each switchgear room. This keeps the room temperature below 104°F during the design outside ambient air temperature of 93°F. Pressure relief dampers are provided on the East side of each switchgear room. These dampers are selected to allow the relief of the specified amount of air while maintaining a light positive pressure within the room. The dampers start to open at a pressure of 0.1 inches of water guage (w.g.) and will fully open when the pressure in the room reaches 0.125 inches w.g. Each supply fan is controlled from a local 'START-STOP' push button located near the fan unit. The control and the selection of the fan is manual. Power supplies for HVS-18 and HVS-19 are from the non-safety MCC 2A1 and MCC 2B1. One train system shall be in operation at all times in order to provide filtered supply air to the switchgear room and provide positive pressure. Periodic check of the temperature in the switchgear room will determine the number of systems to be in operation.

The chemical storage ventilation system consists of a motorized intake louver, medium efficiency filter, wall mounted propeller supply fan (HVE-20) and fixed opening discharge louver. Air is drawn through the motorized louver by the propeller fan and filtered by the medium efficiency filter before being discharged to the room where it picks up heat. The room is maintained at a slightly positive pressure. Air is relieved through the discharge louver. The fan is normally running during plant operation.

9.4.4.3 System Evaluation

The Turbine Building Ventilation System is not required to mitigate the consequences of a design basis accident or to provide a safe shutdown of the reactor. Therefore it is not designed to safety or seismic requirements. The failure of any system component does not affect any safety related system, structure or component.

9.4.4.4 Inspection and Testing

Preoperational tests are performed to ensure that the system is capable of meeting its performance and design basis requirements.

9.4.5 DIESEL GENERATOR BUILDING VENTILATION SYSTEM

9.4.5.1 Design Basis

The Diesel Generator Building Ventilation System is designed to:

a. provide ambient conditions suitable for occupancy when the emergency diesel generators are not in operation, and

b. permit periodic inspection and testing of system components.

System component design data are given in Table 9.4-12. The system air flow diagram is shown on Figure 9.4-9.

9.4.5.2 System Description

A power roof ventilator, located in each room, is sized for four air changes per hour. The system maintains the rooms at 104°F based on 93°F ambient air temperature during normal conditions. When the diesel generators are in operation, the fans serving the engine cooling system radiators provide ventilation air flow through the building to maintain a temperature of 104°F during emergency conditions.

There are no automatically controlled valves in this system. The power roof ventilators are the only two pieces of equipment to be controlled, and they are actuated manually from a local pushbutton station. The outside air intake and the radiator exhaust openings are protected by tornado missile shields.

9.4.5.3 System Evaluation

The Diesel Generator Buildings Ventilation System serves no safety function since it is not required for operation of the emergency diesel generators. The roof ventilators are seismically qualified to prevent damage to the diesel generator during a seismic event.

9.4.5.4 Inspection and Testing

Preoperational tests are performed to ensure that the system is capable of meeting its performance and design basis requirements.

9.4.6 INTAKE STRUCTURE VENTILATION SYSTEM

9.4.6.1 Design Basis

The Intake Structure Ventilation System is designed to:

a. provide ventilation to assure a controlled thermal environment in the intake cooling water pump enclosure during normal operation and accident conditions,

b. provide system functional capability assuming a single active component failure coincident with a loss of offsite power,

c. provide system functional capability during a safe shutdown earthquake, and

d. permit periodic inspection and testing of system components.

The system component design data are given in Table 9.4-12. The system air flow diagram is shown on Figure 9.4-9.

9.4.6.2 System Description

The Intake Structure Ventilation System consists of two redundant 100 percent capacity propeller exhaust fans, two pressure dampers and two screened openings. The air drawn through the screened openings and exhausted by the propeller fans to the atmosphere. One of the fans of the Intake Structure Ventilation System is normally operated as necessary, to maintain the temperature of the intake cooling water pump room less than 120°F. For plant operation in Mode 5, 6 or with the reactor defueled, ventilation, if necessary, may be provided via a temporary (non-safety) system.

9.4.6.3 Safety Evaluation

The Intake Structure Ventilation System is designed to Quality Group C and seismic Category I requirements. Two 100 percent capacity propeller exhaust fans serve the safety related equipment to assure a controlled environment in the structure. Each exhaust fan is powered from an independent redundant bus of the emergency electrical distribution system. Therefore, no single active failure coincident with a loss of offsite power can prevent the system from performing its functional capability.

Missile protection and pressure dampers are provided in the exhaust opening to protect the exhaust fans from external missiles and excessive wind conditions.

9.4.6.4 Inspection and Testing Requirements

Preoperational testing is addressed in Section 14.0.

9.4.6.5 Instrumentation Requirements

Exhaust fans are controlled manually from a local pushbutton station.

9.4.7 COMPONENT COOLING AREA VENTILATION SYSTEM

9.4.7.1 Design Basis

The Component Cooling Area Ventilation System is designed to:

a. provide ventilation to assure a controlled thermal environment in the component cooling area, and

b. permit periodic inspection and testing of system components.

System component design data are given in Table 9.4-12. The system air flow diagram is shown on Figure 9.4-9.

9.4.7.2 System Description

For personnel comfort during normal operation, two propeller fans (HVE-40A and 40B) and exhaust ductwork are provided in the component cooling area. Air is drawn in through the intake openings, picks up heat and is exhausted through exhaust ductwork by the two propeller exhaust fans.

9.4.7.3 System Evaluation

During normal or accident conditions, the mechanical exhaust fans are not required to operate. Ventilation to the component cooling area is based on natural ventilation. Cool air is drawn through the intake openings and picks up heat from the equipment. Because of a stack effect, the hot air rises and is exhausted through the openings in the roof. Natural ventilation is sufficient to maintain a temperature below 120°F during accident conditions and 107°F during normal conditions. Therefore the system is nonsafety and nonseismic.

Screened and missile protected exhaust and intake openings are provided on the roof and at the floor level on the walls.

9.4.7.4 Inspection and Testing

Preoperational tests are performed to ensure that the system is capable of meeting its performance requirements.

9.4.8 REACTOR BUILDING VENTILATION SYSTEMS

The ventilation systems located inside and/or servings the Reactor Building are listed below and are shown on Figure 9.4-1. Each system is designated according to the scheme used for identification purposes as shown on the P&I diagrams referenced below:

Scheme	System	Diagram
A	Containment Purge System	9.4-9
B	Containment Vacuum Relief	9.4-9
C	Containment Fan Coolers	9.4-9
E	Reactor Support Cooling System	9.4-9
F	CEDM Cooling System	9.4-9
G	Reactor Cavity Cooling System	9.4-9
I	Shield Building Ventilation System	9.4-11
J	Continuous Containment/Hydrogen Purge System	9.4-11

9.4.8.1 Containment Purge System

The Containment Purge System flow diagram is shown on Figure 9.4-1 and the control diagram on Figure 9.4-9. System component design data are given in Table 9.4-13.

9.4.8.1.1 Design Bases

The Containment Purge System (HVE-8A or 8B) is designed to reduce the level of radioactive contamination in the containment atmosphere below the limits of 10 CFR 20 so as to permit personnel access to the containment during shutdown and refueling.

The Containment Purge System is nonsafety and nonseismic. The containment penetrations and isolation valves are Quality Group B, seismic Category I, except the bellows in penetration P-11 which are Non-Nuclear Safety and Non-Seismic.

9.4.8.1.2 System Description

The Containment Purge System, which exhausts the containment atmosphere to the environment, is rated ar 42,000 cfm and is operated during shutdown and refueling modes to reduce the residual iodine and particulate activity, as well as to reduce the activity of the nonfilterable noble gases and tritium. Where only short term access to the containment is required, the system is not required to operate.

The suction side of the purge system is connected through a 48 inch by 48 inch duct to the Containment Cooling System ring duct header to assure uniform purging of the containment. A 36 inch by 14 inch branch duct is connected through an automatic damper to forty air inlets located above the water line in the refueling cavity. This exhaust branch is activated during refueling. During normal refueling purge, the containment air from the ring header is drawn through butterfly isolation valves FCV-25-4, -5, and -6 into a filter casing that is common to two belt-driven, single width, single inlet, upblast fans that discharge to the plant vent.

The filter casing and high efficiency filter mounting frames, common to both fans, are of all welded construction and have the flexibility of accepting either the particulate filtration

configuration of 50% efficiency prefilters plus HEPA filters or Iodine Removal configuration of 90-95% efficiency prefilters plus carbon absorbers with minimal effort.

The air makeup side of the purge system includes, in the direction of flow, an air intake louver, a bank of medium efficiency filters, and three 48 in. diameter butterfly type isolation valves designated FCV-25-1, -2 and -3.

The system is manually energized from the control room. When the switch is moved to the 'start' position in the control room, exhaust butterfly valves FCV-25-4, -5, and -6 open and, through valve limit switches, start a fan. Fan motor starter interlocks and a differential pressure switch permit opening of makeup air butterfly valves FCV-25-1, -2, and -3 only when a negative pressure differential (-0.5 in wg) has been established in the containment. This prevents unfiltered flowback through the makeup air valves. The purge fans are designed to trip off if a high differential pressure between the containment and the annulus occurs (-9 in wg). The Containment Purge System isolation valves (FCV-25-1, 25-2, 25-3, 25-4, 25-5 and 25-6) close automatically on activation of the containment isolation actuation signal (CIAS).

9.4.8.1.3 System Evaluation

The Containment Purge System is not a safety related system and is not required to operate following a design basis accident. It is required for purging the containment to allow required access time for plant personnel during planned shutdown and refueling operations. The system requires approximately 15 hours to reduce the sum of the c/mpc to 1.0. A radiation monitor is provided in the plant vent stack to continuously monitor and record the radioactivity level of plant effluent gases being discharged from the plant vent in order to assure that the plant releases do not exceed Technical Specification limits. Compliance of the containment main purge filtration unit (HVE-8A and 8B) to Regulatory Guide 1.140(B1) is delineated in Table 9.4-16.

Isolation valves and containment penetrations are designed to Quality Group B and seismic Category I requirements except the bellows in penetration P-11 which are non Nuclear Safety and Non-Seismic. A containment isolation actuation signal closes these valves. The isolation valves are also designed to fail closed upon loss of instrument air.

9.4.8.1.4 Testing and Inspection

Each component of the Containment Purge System is inspected prior to installation. Components are accessible for periodic inspection during plant shutdown. Preoperational tests are performed on the system to ensure meeting performance and design basis requirements. Two inch injection and one inch sample connections are provided in the filter train for periodic testing of HEPA filters.

9.4.8.2 Containment Vacuum Relief System

The Containment Vacuum Relief System is described as part of the containment functional design in Subsections 6.2.1 and 3.8.2.3.

9.4.8.3 Containment Fan Coolers

The containment fan coolers are described in Subsection 6.2.2.

9.4.8.4 Reactor Support Cooling System

The Reactor Support Cooling System flow diagram is shown on Figure 9.4-1 and the control diagram on Figure 9.4-9. System component design data are given in Table 9.4-14.

9.4.8.4.1 Design Bases

The purpose of the Reactor Support Cooling System (in conjunction with the Reactor Cavity Cooling System) is to limit the temperature at the bottom of the lubrication plates between the reactor and support leg to 300°F, restrict thermal growth of the supporting steel work for the reactor vessel to 3/16 inches by limiting surface temperature to 140°F and limit the temperature at steel-concrete interfaces to 150°F.

The temperature instrumentation used to monitor the reactor support temperatures does not perform a safety related function. An Engineering evaluation (PSL-ENG-SEMS-99-032) was performed to determine the minimum redundancy required for this indication, and the compensatory actions in the event that less than the minimum number of channels are available. The engineering study has evaluated this condition and concluded that the following HVAC cooling equipment is required to remain in service to maintain the Reactor Supports within their design limitation specified above:

a. Sufficient number of Containment Fan Coolers to maintain Containment Atmosphere Temperature equal to or less than 120°F.

b. One out of two Reactor Cavity Fans (HVS-2A and HVS-2B);

c. One out of two CEDM Cooling Fans (HVE-21A and HVE-21B); and

d. One out of two Reactor Support Cooling Fans (HVE-3A and HVE-3B).

The inability to maintain Containment atmosphere temperature at or below 120°F will require operator action to initiate reactor shutdown (trip the reactor) within 45 minutes. The loss of any one of the other required fans, namely Reactor Cavity, CEDM Cooling, or Reactor Support Cooling, shall require the starting of the corresponding standby fan or the lost fan (or fans) shall be restored within 45 minutes. If this cannot be achieved, the operator must initiate a plant trip.

The Reactor Support Cooling System is not required to safely shut down the reactor or mitigate the consequences of a LOCA.

9.4.8.4.2 System Description

The structural steel members beneath the lubrication plates are cooled by utilizing air at 120°F from the containment atmosphere. Either of two 100 percent capacity centrifugal fans (HVE-3A or 3B) supplies this air through duct work and distributes approximately 3800 cfm to each of the three support legs. Flow nozzles are used to distribute the air uniformly to the support structures.

During normal operation, one fan is operated while the other acts as a standby. The fan is started manually from the control room. An air flow switch in the discharge of each fan annunciates after a 10 second time delay on low flow. The reactor support cooling fan motors are tripped (if running) and blocked from starting/restarting on a safety injection actuation signal (SIAS) event due to the environmental conditions created inside the containment building.

The temperature of each reactor support is monitored by temperature sensors which input into two recorders. Temperature at any sensor location is annunciated above 150°F in the control room. The thermocouples used to monitor the support temperature are subject to failure. It may not be practical to replace these thermocouples due to their location in the Reactor under vessel area which have very limited accessibility and very high radiation. An engineering study was performed based on data received from both Unit Nos. 1 and 2, fully operational support temperature monitoring system. This study concluded that the design base requirement of limiting the steel-concrete interface to 150°F would not be jeopardized should the following HVAC cooling equipment remain in service:

a. Sufficient number of Containment Fan Coolers (HVS-1A, HVS-1B, HVS-1C and HVS-1D) to maintain Containment Atmosphere temperature equal to or less than 120°F.

b. One out of two Reactor Cavity Fans (HVS-2A and HVS-2B);

c. One out of two CEDM Cooling Fans (HVE-21A and HVE-21B); and

d. One out of two Reactor Support Cooling Fans (HVE-3A and HVE-3B).

Since the in-place thermocouples may continue to remain functioning for an undetermined length of time, this monitoring system will be left in service to supply additional engineering data reconfirming support cooling. An Engineering evaluation (PSL-ENG-SEMS-99-032) was performed to determine the minimum redundancy required for this indication, and the compensatory actions in the event that less than the minimum number of channels are available. Should there be less than the minimum number of operable channels, the minimum number of operable channels will be restored during the next refueling outage, or an alternate monitoring program will be implemented.

9.4.8.4.3 System Evaluation

The Reactor Support Cooling System is not a safety related system but is seismically qualified to protect neighboring safety related equipment. Although failures of this system can produce no consequences that would require a safety classification, it has been designed with the necessary features to assure continuity and reliability of operation.

The fans are powered from safety bus and upon loss of offsite power, the fans are automatically loaded onto the diesel generators.

9.4.8.4.4 Testing and Inspection

Preoperational tests are performed on the system to ensure its capability of meeting performance and design basis requirements.

9.4.8.5 CEDM Cooling System

The Control Element Drive Mechanism (CEDM) Cooling System flow diagram is shown on Figure 9.4-1 and the control diagram on Figure 9.4-9. System component design data are given in Table 9.4-14.

9.4.8.5.1 Design Bases

The CEDM Cooling System is designed to ventilate the CEDM magnetic jack coils and thus maintain them at a temperature below 350°F.

The system is not safety related but the ductwork is seismically qualified to prevent damage to neighboring safety related equipment.

9.4.8.5.2 System Description

The CEDM Cooling System consists of redundant cooling fans and a cooling coil enclosed in a mounting at floor elevation 62 ft.

A negative pressure is maintained inside the CEDM cooling shroud by fans HVE-21A or 21B. Air enters the cooling shroud at the ambient containment air temperature, is distributed by an orifice plant to the CEDM chimneys, and leaves at approximately 155°F. The heated air is cooled in an air to water heat exchanger and is discharged back to the containment. Component cooling water from the nonessential header supplies the heat exchanger at a design temperature of 100°F. Air temperatures entering and leaving the cooling coil are recorded and annunciated in the control room at 160°F and 115°F, respectively.

The CEDM Cooling System is in service during normal plant operation. One fan is operated while the other serves as a standby.

Each fan is started manually from a control switch in the control room. Indicating lights in the control room indicate operating status. The control element drive mechanism cooling fan motors are tripped (if running) and blocked from starting/restarting on a safety injection actuation signal (SIAS) event due to the environmental conditions created inside the containment building.

Fans HVE-21A and 21B are interlocked so that on an electrical motor trip the standby fan starts automatically. As discussed in Subsection 9.4.8.4.1, one CEDM Cooling Fan is required to maintain Reactor Supports within design limitations.

Refer to Section 4.6 for a discussion of loss of CEDM cooling air flow.

9.4.8.5.3 System Evaluation

The CEDM Cooling System is not a safety related system. The ductwork is seismically qualified to remain intact in the event of a safe shutdown earthquake.

An air flow switch in the intake of each fan annunciates in the control room a failure to operate and starts the standby fan automatically with the low flow signal after a predetermined delay. Air temperatures entering and leaving the cooling coil are recorded and annunciated in the control room at 160°F and 115°F, respectively.

9.4.8.5.4 Testing and Inspection

Preoperational tests are performed on the system to ensure its capability of meeting performance and design basis requirements.

9.4.8.6 Reactor Cavity Cooling System

The Reactor Cavity Cooling System air flow diagram is shown on Figure 9.4-1 and the control diagram on Figure 9.4-9. System component design data are given in Table 9.4-14.

9.4.8.6.1 Design Bases

The Reactor Cavity Cooling System is designed to ventilate the annular space between the reactor vessel and the concrete primary shield wall to limit the concrete surface temperature to a maximum of 150°F to minimize the possibility of concrete dehydration. The cooling system limits thermal growth of the supporting steel work, in conjunction with the Reactor Support Cooling System which is discussed in Subsection 9.4.8.4, and also cools the reactor vessel insulation.

The Reactor Cavity Cooling system is not required to safely shut down the reactor or mitigate the consequences of a LOCA.

9.4.8.6.2 System Description

Basic components consist of two redundant axial fans (HVS-2A and 2B), each sized for 100 percent capacity, and a ducted air supply system. Cooled air, between 100 and 105°F, is drawn from the fan cooler ring header and directed into the annular space formed between the reactor vessel and the primary shield wall.

During normal operation only one fan is operated while the other acts as a standby. As discussed in Subsection 9.4.8.4.1, one Reactor Cavity Cooling Fan is required to maintain Reactor Supports within design limitations.

An air flow switch in the discharge of each fan annunciates in the control room on low flow after a 10 second time delay. The reactor cavity cooling fan motors are tripped (if running) and blocked from starting/restarting on a safety injection actuation signal (SIAS) event due to the environmental conditions created inside the containment building.

Ambient temperatures are recorded from two locations 180 degrees apart in the reactor cavity and alarmed in the control room at 150°F. An Engineering evaluation (PSL-ENG-SEMS-99-032) was performed to determine the minimum redundancy required for this indication, and the compensatory actions in the event that less than the minimum number of channels are available. Should there be less than the minimum number of operable channels, the minimum number of operable channels will be restored during the next refueling outage, or an alternate monitoring program will be implemented.

In case of loss of offsite power, the fans are automatically loaded on the emergency diesel generators and automatically restarted to provide continued cooling of the reactor cavity in order to facilitate maintenance of the reactor in a hot standby condition. Each 100 percent capacity redundant fan is thus available to maintain reactor cavity cooling upon loss of offsite power.

9.4.8.6.3 System Evaluation

The Reactor Cavity Cooling System is not required to safely shut down the reactor or mitigate the consequences of a LOCA. There are no safety related components located in the reactor

cavity which require cooling to perform their function other than the out of core neutron detectors which are qualified to function at 180 F.

The Reactor Cavity Cooling System is seismically qualified to protect neighboring safety related equipment.

Although failures of this system can produce no consequences that would require a safety classification, it has been designed with the necessary features to assure continuity and reliability of operation. The fans are powered from safety buses and upon loss of offsite power the fans are automatically loaded onto the diesel generators.

9.4.8.6.4 Testing and Inspection

Preoperational tests are performed on the system to ensure its capability of meeting performance and design basis requirements.

9.4.8.7 Shield Building Ventilation System

The Shield Building Ventilation System is discussed in Subsections 6.5.1 and 6.2.3.

9.4.8.8 Continuous Containment Purge/Hydrogen Purge System

The Continuous Containment Purge/Hydrogen Purge System flow diagram is shown in Figure 9.4-1 and the control diagram on Figure 9.4-11. System component design data are given in Table 9.4-15.

9.4.8.8.1 Design Bases

The Continuous Containment Purge/Hydrogen Purge System is designed to:

a. provide a sufficiently low concentration of radionuclides in the containment atmosphere in order to allow required access time for plant operators during inspection and maintenance operations,

b. provide a means of relieving containment pressure buildup as a result of instrument air leakage and/or containment atmosphere temperature fluctuations,

c. provide the capability of ensuring that the containment source term contribution to the annual average offsite doses is maintained as low as is reasonably achievable, and

d. provide a hydrogen removal capability.

The Continuous Containment Purge/Hydrogen Purge System is not required for the safe shut down of the reactor or to mitigate the consequences of a design basis accident. Therefore, the system is not safety related, other than the containment isolation valves and penetrations which are Quality Group B and seismic Category I. The system is seismically qualified to preclude damage to neighboring safety related equipment.

Redundant hydrogen recombiners are provided to control the concentration of hydrogen following a LOCA (refer to Subsection 6.2.5). Although not required, the Continuous Containment Purge/Hydrogen Purge System is available.

9.4.8.8.2 System Description

The system consists of a purge makeup penetration line, an exhaust penetration line, an air cleaning unit, redundant 100 percent capacity centrifugal exhaust fans, discharge ductwork and interconnecting ductwork between the fan discharge and suction header of the SBVS. The exhaust line inside the containment is provided with an inlet bell and screen and is connected to two four in. lines that run to the top of the dome where exhaust openings are provided. The isolation valve inside containment on the makeup line is provided also with a debris screen. The flow control valves in air cleaning unit bypass line and in the main discharge line are interlocked such that any one can not be opened unless the other is fully closed.

Containment air is drawn by the system exhaust fan during operation (2000-2500 cfm) and passed through the air cleaning unit where air is filtered prior to release to the environment.

The system is started, on an as-required-basis, by opening the isolation valves in the exhaust line and starting the exhaust fan manually from the control room. When a negative pressure is attained in the containment, the isolation valves of the makeup line are manually opened to allow makeup air inside the containment. When the air pressure exceeds -1.4 in wg, the makeup air flows into the Reactor Building. An air flow switch in the discharge of each fan annunciates in the control room on low flow after a 10 second time delay. The normal air flow is indicated and recorded in the control room.

9.4.8.8.3 System Evaluation

The Continuous Containment Purge/Hydrogen Purge System is utilized to reduce and maintain the concentration of radionuclides airborne within the containment below the levels which could result in exposures in excess of 10 CFR 20 limits. Using the recommendations and guidance provided in NUREG-0017, and assuming 1.0 percent per day of the noble gases and 0.001 percent per day of the iodines in the primary coolant under normal operating conditions become airborne in the containment, an individual could repeatedly enter the containment for 60 minutes per week and not exceeding a dose rate of three rem/yr. Compliance with 10 CFR 50 Appendix I individual dose criteria can be achieved without the use of charcoal filters on the continuous containment purge exhaust. Charcoal filtration of the exhaust meets the cost-benefit criteria of Appendix I. Compliance of the continuous containment/ hydrogen purge filtration unit (HVE-7A and B) to Regulatory Guide 1.140 (R1) is described in Table 9.4-16.

The Continuous Containment Purge/Hydrogen Purge System is not required for the safe shutdown of the reactor or to mitigate the consequences of a design basis accident. Therefore, the only portion of the system that is Quality Group B are the containment penetrations and isolation valves. A loss of instrument air supply causes the valves to fail close. FCV-25-29 and FCV-25-34 are key locked closed at power.

Upon receipt of a CIAS, the isolation valves close automatically and the fan is stopped manually if the system was in service. The hydrogen purging mode is discussed in Subsection 6.2.5.

In accordance with Branch Technical Position CSB 6-4, "Containment Purging During Normal Plant Operation," (Rev 1), the exhaust purge and makeup line penetration sizes are eight inches with a containment isolation valve closure time of five seconds. These limits are derived from limiting possible radiological consequences resulting from a LOCA release through the purge vent and limiting possible adverse interactive effects between minimum containment pressure

and ECCS performance. To prevent the purge lines from clogging, the inlet bell on the exhaust purge line and the check valve on the makeup line are provided with wire mesh screen.

An analysis performed to determine post LOCA offsite doses at the low population zone indicates that the dose guidelines established for design basis accidents are not exceeded.

The hydrogen purge system designed for a rate of 100 cfm is more than sufficient to control hydrogen buildup following an accident.

9.4.8.8.4 Testing and Inspection

Preoperational tests are performed on the system to ensure its capability of meeting performance and design bases requirements.

This system is operated on an as-required-basis during normal plant operation and thus no special test provisions are required to monitor the system for operability. Two inch injection and one inch sample connections are provided in the air cleaning unit to facilitate periodic testing of HEPA filters and charcoal adsorbers. Access doors are provided in each compartment of the air cleaning units for testing and visual inspection of the filters.

TABLE 9.4-1

DESIGN DATA FOR THE CONTROL ROOM AIR CONDITIONING SYSTEM COMPONENTS

General	
Quantity	3
Identification	HVA/ACC-3A, 3B and 3C
Type	Packaged air conditioning system, direct expansion with water cooled condensers
Quality Group	C
Seismic Category	I
Nominal Air Flow Rate, cfm normal/accident (each)	9100/11640
Equipment Design Temperature, °F	60 to 125
Casing Materials	Galvanized steel coated with epoxy paint
Fan	
Number of Fans per Unit	1
Type of Fan	Centrifugal
Type of Drive	V-Belt
Flow Rate of Fan, cfm (normal/accident)	9100/11640
Fan Static Pressure, in. wg (Normal/Accident)	5.0/4.0
Fan Motor	
Quantity per Fan	1
Class	1E
Horsepower/rpm	15/1800
Insulation	Class H
Nominal Voltage/Frequency/Phase	460/60/3
Enclosure	Drip Proof

TABLE 9.4-1 (Cont'd)

Compressor Motor	
Quantity per Unit	1
Class	1E
Hp/rpm	65/3474
Nominal Voltage/Frequency/Phase	460/60/3
Enclosure	Semi-hermetic Compressor Housing
Cooling Coil Section	
Quantity per Unit	1
Type	Finned Tube
Code	ASME Section III/3
Cooling Medium	Refrigerant R134a
Design Working Water Pressure, psig	200
Sensible Heat Removal Capacity, Btu/hr (Normal/Emergency)	233,500/346,830
Total Heat Removal Capacity, Btu/hr (Normal/Emergency)	262,000/384,950
Entering Air Temperature, F DB (Normal/ Emergency)	78.5/81.5
Refrigerant Temperature, F	43
Filters	
Quantity	6
Type/Efficiency	Bag/50 to 55 percent
Maximum Pressure Drop	
Clean, in. wg	0.25
Loaded, in. wg	0.60
Water Cooled Condenser	
Quantity per Unit	1

TABLE 9.4-1 (Cont'd)

Water Cooled Condenser (cont'd)	
Code	ASME Section III/3
Water Flow rate, gpm	100
Water Supply Temperature, °F	100*
Fouling Factor	.001
Saturated Condensing Temperature, °F	140
Condenser Plate	Stainless Steel
Design Working Pressure, psig	
a) Refrigerant Side	435
b) Water Side	150
Toilet Exhaust Fan (HVE-14)	
Type of Fan	Centrifugal
Type of Drive	Direct
Quality Group	NNS
Seismic Category	Nonseismic
Flow Rate, cfm	200
Fan Static Pressure, in. wg	.67
Fan Motor hp	1/4
Kitchen Exhaust Fan (HVE-33)	
Type of Fan	Centrifugal
Type of Drive	Direct
Quality Group	NNS
Seismic Category	Nonseismic
Flow Rate, cfm	350
Fan Static Pressure, in. wg	1.5
Fan Motor hp	1

* This temperature was specific for procurement purposes. Component cooling water temperatures under accident conditions are shown on Figure 6.2-3a.

TABLE 9.4-2

DESIGN DATA FOR THE CONTROL ROOM EMERGENCY CLEANUP SYSTEM COMPONENTS

General	
Quality	2
Identification	HVE-13A and 13B
Quality Group	C
Seismic Category	I
Nominal Air Flow Rate, cfm per unit	2000
Equipment Design Temperature Range, °F	60 to 125
Construction Standard	ANSI N509-1976
Fan	
Quantity per Unit	1
Type of Fan	Centrifugal
Type of Drive	Direct
Nominal Operating Range, cfm	2000
Fan Static Pressure at Nominal Air Flow Rate, in. wg	12.3
Fan Motor	
Quantity per Fan	1
Class	1E
Horsepower, hp	10
Nominal Voltage/Frequency/Phase	460/60/3
Enclosure	Totally Enclosed Fan Cooled

TABLE 9.4-2 (Cont'd)

Casing	
Material	Carbon Steel
Design Pressure:	
Positive, psig	2
Negative, in. wg	15
Prefilters	
Quantity per Unit	2
Cell Size, in.	24 wide x 24 high x 12 deep
Cell Arrangement	1 wide x 2 high
Face Velocity, fpm	250
Access for Filter Loading	Downstream
Efficiency, percent	90
Maximum Pressure Drop,	
Clean, in. wg	1.0
Loaded, in. wg	3.0
HEPA Prefilters	
Quantity per Unit	2
Cell Size, in.	24 wide x 24 high x 11 1/2 deep
Cell Arrangement	1 wide x 2 high
Maximum Pressure Drop,	
Clean, in. wg	1.0
Loaded, in. wg	3.0
Access for Filter Loading	Upstream

TABLE 9.4-2 (Cont'd)

HEPA Prefilters (Cont'd)	
Efficiency, percent	99.95 of the DOP when tested with ANSI N-510-1980
Material	Pleated glass paper without separators, enclosed in stainless steel frame, ASTM-A268; alternate HEPA filter design includes aluminum separators and cadmium plated carbon steel frame
Standards	MIL-F-51068D, MIL-F-51079A and UL 586 Class I
Charcoal Adsorbers	
Number of Beds per Unit	2
Make and type	CVI HECA Module
Construction	Vertical
Material	Adsorber, activated coconut shell charcoal; enclosure, stainless steel ASTM A240 type 304
Bulk density (bone dry), gm/ml	.38 minimum per ASTM D2854
Loading capacity	2.5 mg of iodine per gram of charcoal
Amount of Charcoal, lbs	804 per filter train
Particle Size Distribution	10 thru 14 mesh
Plenum Size, in.	33 wide x 84 high x 60 deep
Bed Arrangement	2 wide x 1 high
Bed thickness, in. nominal	4

TABLE 9.4-2 (Cont'd)

Charcoal Adsorbers (Cont'd)	
Efficiency	99.825 percent minimum when tested in accordance with ASTM D3803-1989.
Maximum Pressure Drop, in. wg	2.4
Nondestructive Tests	ANSI N510-1980
Type of Loading	Overhead hopper
HEPA After Filters	
Quantity per Unit	2
Cells size, in.	24 wide x 24 high x 11 1/2 deep
Cell arrangement	1 wide x 2 high
Maximum Pressure Drop,	
Clean, in. wg	1.0
Loaded, in. wg	3.0
Efficiency, percent	99.95 of the DOP when tested with ANSI N-510-1980
Material	Pleated glass paper without separators enclosed in stainless steel frame, ASTM A268; alternate HEPA filter design includes aluminum separators and cadmium plated carbon steel frame
Access for Filter Loading	Downstream
Standards	MIL-F-51068D, MIL-F-51079A and UL 586 Class I
Ducts	
Material	Galvanized sheet metal - ASTM-A526
Quality Group	C
Seismic Category	I

TABLE 9.4-3

CONTROL ROOM AIR CONDITIONING SYSTEM AND CONTROL ROOM EMERGENCY CLEANUP SYSTEM
FAILURE MODES AND EFFECTS ANALYSIS

Component Identification	Failure Mode	Effect on System	Method of Detection	Monitor[1]	Remarks
1. Outside air intake valves:	a) One valve fails to close on CIAS or high radiation	a) Loss of one isolation valve	a) Valve position indication	CRI	a) i) Redundant valve in series closes ii) Valve can be closed manually
Northern Side – FCV-25-14 or 16 Southern Side FCV-25-15 or 17	b) One valve fails to open due to electrical A or B train failure	b) Loss of one outside air intake	b) Valve position switch and low flow indication	CRI	b) i) Redundant outside air intake train is available ii) Valve can be open manually
2. Dampers to emergency clean-up units D-17A or D-17B	One damper fails to open	Loss of one CRECS	Damper position switch, no flow alarm, and low flow indication	CRI	100 percent capacity redundant CRECS is available
3. CRECS Filters: medium efficiency; pre-HEPA, charcoal, after HEPA	One filter clogs	Loss of one CRECS	Pressure differential alarm across pre-HEPA filters; pressure differential recorder across filter train, pre-HEPA and after HEPA filters	CRI	100 percent capacity redundant CRECS is available
4. CRECS fan inlet dampers D-18 or D-19	One damper fails to open	Loss on one CRECS	No flow alarm and low flow indication	CRI	100 percent capacity redundant CRECS is available
5. CRECS fans HVE-13A or 13B	One fan fails to start	Loss of one CRECS	No flow alarm and low flow indication	CRI	100 percent capacity redundant CRECS is available
6. Modulating dampers D-39 or D-40	One damper fails to modulate	Loss of modulation	None	-	Damper is designed to fail-open position. Redundant damper is available for modulation.
7. Dampers to air conditioning units	a) One fails to open	a) Loss of one air conditioning unit	Low flow alarm	CRI	a) Two 100 percent redundant air conditioning units are available
D-20, D-21 or D-22	b) One fails to close	b) None	-	-	b) If air conditioning unit is not operating, short circuit back flow is prevented by gravity damper located on the discharge side.
8. Air conditioning units	a) Loss of CCW	a) Loss of one air conditioning unit	High condenser temper ature automatically stops the air conditioning unit. This initiates a no flow alarm in the control room	CRI	Two 100 percent redundant air conditioning units are available
	b) CRAC fans fails to start/run	b) Control Room Emergency Filtration function degraded	Low Flow Alarm	CRI	Two 100% redundant CRAC fans are available

[1] CRI = Control Room Indication

TABLE 9.4-3(Cont'd)

Component Identification	Failure Mode	Effect on System	Method of Detection	Monitor[1]	Remarks
9. Fans HVE-14 and HVE-33 isolation valves: FCV-25-18 or 19 FCV-25-24 or 25	One valve fails to close	Loss of one isolation valve	Valve position switch and control room pressure indication	CRI	a) Redundant valve in series closes b) Valve can be manually closed

[1] CRI = Control Room Indication

TABLE 9.4-4

CONTROL ROOM VENTILATION SYSTEM INSTRUMENTATION APPLICATION

System Parameter and Location	Indication Local	Indication CR HVCB	Alarm(1) High	Alarm(1) Low	(1) Recording	TAG # or Control Function	Instrument(3) Range	Normal Operating Range	CRI Instrument(3) Accuracy
Control Room Emerg. CleanUp System									
1) Isolation valve position		X				Limit Switches Indicates the position of FCV-25-14,15,16,17 -18,19,24,25	-	-	-
2) a) Normal intake air flow b) Emergency intake air flow		X				FI-25-18A;-18B		a) 750 cfm b) >450 cfm	
3) Intake air radiation		X(2)	X(2)		X(2)	Indicates which intake is "cleaner"		10^2-10^3 CPM	
4) HEPA pre filters differential pressure	X					FG-25-7; 11		0.7-3.0 inch WG	
5) HEPA after filter differential pressure	X				X	PDT-25-21A; 21B, PR-25-1A, 1B FG-25-10, -14		0.7-3.0 inch WG	
6) Filter train differential pressure	X				X	PR-25-1A; 1B PDT-25-22A; 22B		4-8 inch WG	
7) Charcoal filter differential pressure	X				X	PR-25-1A; - 1B FG-25-9, -13 PDT-25-20A; 20B		2.4 inch WG	
8) Air temperature downstream of medium eff. filter and charcoal adsorber	X		X		X	TR-25-1A;-1B		60-125°F	
9) Charcoal adsorber temperature	X		X		X	TR-25-1A;-1B		60-200°F	
10) Fan discharge flow	X	X			X	FI-25-19A1;-19B1, FR-25-1A, 1B Controls air flow thru fans HVE-13A & B		2000 cfm	
11) Inside/Outside control room differential pressure	X	X				PDIS-25-23A&B		0-.125 inch WG	
12) Deleted									

TABLE 9.4-4 (cont'd)

CONTROL ROOM VENTILATION SYSTEM INSTRUMENTATION APPLICATION

System Parameter and Location	Indication Local	Indication CR HVCB	Alarm(1) High	Alarm(1) Low	(1) Recording	TAG # or Control Function	Instrument(3) Range	Normal Operating Range	CRI Instrument(3) Accuracy
13) Damper position		X				Limit switches will indicate position of D-17A, 17B, 18 & 19	-	-	-
14) Discharge Flow Failure		X		X		FS-25-9A, -9B		0.10 in. inch WG	-
15) Discharge Flow Failure						To start standby Fan, FS-25-16A, & 16B	-	-	-
Packaged A/C Units for Control Room									
1) Intake temperature	X					Local Temperature Indication TI-25-8, 10, 12		60-125°F	-
2) Discharge temperature	X					Local Temperature Indication TS-25-9, 11, 13		60-125°F	-
3) Discharge flow failure				X		Alerts operator of malfunction FS-25-10A, 10B, 10C		.03 to 0.5	-
4) Control room return air temperature	X					Starts Air Conditioner at 75°F TE-25-65A, B, C		70-80°F	-
5) Offices temperature	X					Control supply damper to maintain room temp. TS-25-13, 14		60-80°F	-
6) Kitchen/Dining/Conference Room Temperature	X					Control supply damper to maintain room temp. TS-25-12		60-80°F	-
Toilet and Kitchen Exhaust									
1) Isolation valve positions		X				Limit switch indicate position of FCV-25-18, FCV-25-19, 24 & 25	-	-	-

(1) All alarms and recordings are on HVCB unless otherwise indicated.
(2) Radiation monitoring panel.
(3) Instrument ranges are selected in accordance with standard engineering practices. Instrument accuracies are selected such that existing instrument loop performance and safety analysis assumptions remain valid. Where applicable, instrument accuracies are also evaluated for their impact on setpoints in accordance with the FPL Setpoint Methodology.

TABLE 9.4-5

DESIGN DATA FOR FUEL HANDLING BUILDING VENTILATION SYSTEM

Fuel Pool Area Supply Ventilation	
Identification	HVS - 6
Quantity	1
Quality Group	D
Fan Capacity, cfm (minimum)	9450
Fan Static Pressure, in. wg	2.2
Fan Motor, hp	7.5
Filters, Quantity	9
Type	Throwaway
Material	Viscous coated fibers
Maximum pressure drop, loaded, in. wg.	0.5
Fuel Pool Area Exhaust Ventilation	
Identification	HVE - 16A and 16B
Quantity	2 fans and one filtration unit
Quality Group	D
Number of Fan Normally Running	1
Fan Capacity, cfm (minimum)	10,000
Fan Static Pressure, in. wg	8.9
Fan Motor, hp	25
Prefilters, Quantity	9
Type	Medium efficiency disposable filter
Material	Glass fiber media
Maximum pressure drop, loaded in. wg	1.0

TABLE 9.4-5 (Cont'd)

HEPA Filters,	Quantity	9
	Cell Size, in.	24 x 24 x 11 1/2
	Max. pressure drop, clean, in. wg	1.0
	Max. pressure drop, loaded, in. wg	3
	Material	pleated glass paper without separators enclosed in stainless steel frame ASTM A268; alternate HEPA filter design includes aluminum separators and cadmium plated carbon steel frame
	Efficiency, percent	99.97 when tested with 0.3 Micron DOP
	Standards	Mil-51068D, MIL-F-51079A and UL 586 Class I

<u>Fuel Handling Building Lower Elevation Supply Ventilation</u>

Identification		HVS - 7
Quantity		1
Quality Group		D
Fan Capacity, cfm (minimum)		9,600
Fan Static Pressure, in. wg		2.1
Fan Motor, hp		7.5
Filters,	Quantity	9
	Type	Throwaway
	Material	Viscous coated fibers
	Maximum pressure drop, loaded, in. wg	0.50

<u>Fuel Handling Building Lower Elevation Exhaust Ventilation</u>

Identification	HVE - 15
Quantity	1
Quality Croup	D
Fan Capacity, cfm (minimum)	9,700
Fan Static Pressure, in. wg	6.3
Fan Motor, hp	20

TABLE 9.4-5 (Cont'd)

Prefilters,	Quantity	9
	Type	Medium efficiency disposable filter
	Material	Glass fiber media
	Maximum pressure drop, loaded, in. wg	1.0
HEPA Filters,	Quantity	9
	Cell Size, in.	24 x 24 x 11 1/2
	Max. pressure drop, clean, in. wg	1.0
	Max. pressure drop, loaded, in. wg	3
	Material	pleated glass paper without separators enclosed in stainless steel frame ASTM A268; alternate HEPA filter design includes aluminum separators and cadmium plated carbon steel frame
	Efficiency, percent	99.97 when tested with 0.3 Micron DOP
	Standards	MIL-F-51068D, MIL-F-51079A and UL 586 Class I

<u>H&V Room Exhaust Ventilation</u>

Identification	HVE - 17
Quantity	1
Quality Group	D
Fan Capacity, cfm (minimum)	6,000
Fan Static Pressure, in. wg	1.2
Fan Motor, hp	3

TABLE 9.4-6

DESIGN DATA FOR REACTOR AUXILIARY BUILDING VENTILATION SYSTEM COMPONENTS

1. Reactor Auxiliary Building Main Supply System (HVS-4A &4B)

Number of fans installed	2
Number of fans normally operating	1
Quality Group	C
Seismic Category	I
Fan capacity, each, cfm	81,470
Fan static pressure, inch wg	6.95
Fan motor hp	150
Filters	
Quantity	36
Type	Medium efficiency disposable filter
Material	Glass fiber filter media
Maximum pressure drop, loaded, inch wg	1.0

2. Reactor Auxiliary Building Main Exhaust System (HVE-10A & 10B)

Number of fans installed	2
Number of fans normally operating	1
Quality Group	NNS
Seismic Category	Nonseismic
Fan capacity, each, cfm	89,730
Fan static pressure, inch wg	9.7
Fan motor hp	250
Prefilters	
Quantity	78
Type	Medium efficiency disposable filter
Material	glass fiber filter media
Maximum pressure drop, loaded, in. wg	1.0
HEPA Filter	
Quantity	78
Efficiency, percent	99.97 when tested with 0.3 micron DOP
Standards	Mil-F-51068D Mil-F-51079A and UL-586, Class I
Material	Pleated glass paper without separators enclosed in stainless steel frame ASTM A268; alternate HEPA filter design includes aluminum separators and cadmium plated carbon steel frame
Maximum pressure drop loaded, inch wg	3.0

TABLE 9.4-6 (Con'd)

3. Electrical Equipment and Battery Room Ventilation Supply System (HVS-5A & 5B)

Number of fans installed	2
Number of fans normally operating	1
Quality Group	C
Seismic Category	I
Fan capacity, each, cfm	63,100
Fan static pressure, in. wg	5.7
Fan motor hp	100
Filters	
Quantity	42
Type	Medium efficiency disposable filter
Material	Glass fiber filter media
Max mum pressure drop, loaded, in. wg	1.0

4. Electrical Equipment Room Exhaust System

Number of fans installed:	
Propeller Fans (RV-3&4)	2
Centrifugal Fans (HVE-11&12)	2
Quality Group	C
Seismic Category	I
Number of fans normally operating:	
Propeller Fans RV-3 or 4	1
Centrifugal Fans HVE-11 or 12	1
Fan Capacity, cfm each:	
Propeller Fans RV-3 or 4	17,550
Centrifugal Fans HVE-11 or 12	45,380
Fan Motor, hp each: (purchased values)	
Propeller Fans RV-3 or 4	5
Centrifugal Fans HVE-11 or 12	50

5. Battery Room Exhaust System (RV-1 and 2)
(Data given applies to each room 2A and 2B)

Number of fans installed	1
Number of fans normally operating	1
Quality Group	C
Seismic Category	I
Fan capacity, each, cfm	1060 (RV-1), 810 (RV-2)
Fan motor, hp (purchased)	0.75

6. Locker Rooms/Personnel Area Supply System (HVS-3 and HVA/ACC-15 & 16)

HVS-3

Number of fans installed	1
Number of fans normally operating	0 (replaced with HVA/ACC
Quality Group	C 15 & 16 via PC/M 137-283)
Seismic Category	I
Fan capacity, cfm (summer/winter)	6000/4000
Fan static pressure, in. wg	1.5

TABLE 9.4-6 (Con'd)

6. Locker Rooms/Personnel Area Supply System (HVS-3) (Cont'd)

Fan motor, hp	5
Filters	
Quantity	6
Type	Throwaway
Material	Viscous coated fibers
Maximum pressure drop, loaded, in. wg	0.50
HVA/ACC-15 & 16	
Number of air conditioners installed	2
Number of air conditoners normally operating	2
Safety Classification	NNS
Seismic Category	Nonseismic
Fan Capacity, cfm	4000 (each)

7. Locker and Cold Areas Exhaust System (HVE-4)

Number of fans installed	1
Number of fans normally operating	1
Quality Group	NNS
Seismic Category	Nonseismic
Fan capacity, cfm	1800
Fan static pressure, in. wg	1.1
Fan motor, hp	0.75

8. Laundry and Hot Areas Exhaust System (HVE-5)

Number of fans installed	
Number of fans normally operated	1
Quality Group	NNS
Category	Nonseismic
Fan capacity, cfm	4200
Fan static pressure, in. wg	6.7
Fan motor, hp	7.5
Prefilters	
Quantity	6
Type	Medium efficiency disposable
Material	Glass fiber filter media
Maximum pressure drop, loaded, in. wg	1.0

TABLE 9.4-6 (Con'd)

8. Laundry and Hot Areas Exhaust System (HVE-5) (Cont'd)

HEPA filters	
Quantity	6
Efficiency, percent	99.97 when tested with 0.3 micron DOP
Standards	Mil-F-51068D, Mil-F-51079A and UL-586 Class I
Material	Pleated glass paper without separators enclosed in stainless steel frame ASTM A268; alternate HEPA filter design includes aluminum separators and cadmium plated carbon steel frame
Maximum pressure drop, loaded, in. wg	3.0

9. Health Physics, First Aid and Cold Laboratory Room Ventilation Supply System (2HVA/ACC-2)

Number of air conditioners installed	1
Number of air conditioners normally operating	1
Quality Group	NNS
Seismic Category	Nonseismic
Fan capacity, cfm	2250
Fan static pressure, in. wg	1.45
Fan motor, hp	1.5
Compressor, kw	9.2
Condenser fan motor, hp	.75
Filters	
Quantity	4
Type	Panel
Material	Glass fiber filter media
Maximum pressure drop loaded, in. wg	0.4

10. Counting, Instrument and Radio Chem. Room Ventilation Supply System (HVA/ACC-1)

Number of air conditioners installed	1
Number of air conditioners normally operating	1
Quality Group	NNS
Seismic Category	Nonseismic
Fan capacity, cfm	5600
Fan static pressure, in. wg	1.1
Fan Motor, hp	7-1/2
Compressor, kw	2 @ 19.5
Condenser fan motor, hp	3 @ 1.1

TABLE 9.4-6 (Con'd)

10. Counting, Instrument and Radio Chem. Room Ventilation Supply System (HVA/ACC-1) (Cont'd)

Filters	
Quantity	16
Type	Panel
Material	High Efficiency Throwaway
Maximum pressure drop, loaded, in. wg	0.4

11. First Aid Toilet Exhaust (HVE-25)

Number of fans installed	1
Number of fans normally operating	1
Quality Group	NNS
Seismic Category	Nonseismic
Fan capacity, cfm	115
Fan static pressure, in. wg	.375
Fan motor, hp	1/25 HP

12. Elevator Control Room (TWU-8) EC284572

Number of air conditioners installed	1
Number of air conditioners normally operating	1
Quality Group	NNS
Seismic Category	Nonseismic
Cooling capacity, BTU/hr	6000 EC284572

13. Tank Room (HVE-24)

Number of fans installed	1
Number of fans normally operating	1
Quality Group	NNS
Seismic Category	Nonseismic
Fan capacity, cfm	2500
Fan static pressure in. wg	0.25
Fan motor hp	0.75

14. CEDMCS Equipment Enclosure (HVA/ACC-5A, B)

Number of air conditioners installed	2
Number of air conditioners normally operating	1
Safety Classification	NNS for ACC-5A, B QR for HVA-5A,B

TABLE 9.4-6 (Con'd)

14. CEDMCS Equipment Enclosure (HVA/ACC-5A, B) (Cont'd)

Seismic Category	D, Seismic II/I for HVA-5A, B
Fan capacity,cfm	7,000 (each) EC287236
Fan static pressure, in. wg	3.8
Fan Motor, hp	7.5
Compressor, hp	10.0
Condenser fan motor, hp	1.0

15. ERDADS Standby A/C (TWU-5 & TWU-6)

Number of air conditioners installed	2
Number of air conditioners normally operating	None
Safety Classification	QR
Seismic Category	D, Seismic II/ I
Fan Capacity (approximate), cfm	600 (each)
Fan/Compressor, KW	3

16. Static Inverter Room Standby A/C (HVA/ACC-4)

Number of air conditioners installed	1 EC287236
Number of air conditioners normally operating	None
Safety Classification	QR
Seismic Category	D, Seismic II/I
Fan Capacity (approximate), cfm	2000
Fan/Compressor, KW	11.71

TABLE 9.4-7

DESIGN DATA FOR ECCS AREA VENTILATION SYSTEM COMPONENTS (HVE-9A&9B)

1. Fans

Quantity	2, one per filter train
Fan static pressure, in. wg	8
Actual air flow at inlet, cfm	30,000 per fan
Air density, lb/ft ^{3}	0.075
Quality Group	C
Seismic Category	I
Type, both systems	Centrifugal, fixed pitch belt, air foil, non-overloading

2. Motors

Quantity	2, one per fan
Type	Induction 60 HP, 460 volt 3 phase, 60 cycle
Insulation	Class B
Enclosure	Drip-proof

3. HEPA Filters

Quantity	30 per filter train
Cell size, in.	24 x 24 x 11-1/2
Cell arrangement	6 wide x 5 high
Max pressure drop, clean, in. wg	1.0
Max pressure drop, loaded, in. wg	3.0
Efficiency, percent	99.97 when tested with 0.3 micron DOP
Material	Pleated glass paper without separators enclosed in stainless steel frame ASTM A268; alternate HEPA filter design includes aluminum separators and cadmium plated carbon steel frame
Standards	MIL-F-51068D, MIL-F-51079A and UL-586 Class I

4. Charcoal Adsorbers

Number of beds	10 per filter train
Bed size, in. (W x H x D)	2 x 146 x 60
Bed arrangement	10 wide x 1 high
Max pressure drop, in. wg	1.35
Efficiency, percent	99 minimum in accordance with ANSI N509-1976
Loading capacity	2.5 mg of iodine per gram of charcoal
Minimum. residence time, sec	0.25
Material: Adsorber	Activated coconut shell charcoal
Enclosure	Stainless steel ASTM A240
Type of Loading	Overhead hopper

5. Ducts

Material	Galvanized sheet metal, ASTM A-526

TABLE 9.4-8

RAB HVAC COMPONENTS WITH SIAS, INTERLOCKS OR MANUAL CONTROLS

	Component	Manual Operation Local	Manual Operation Control Room	SIAS Yes	SIAS No	Interlock	SIAS Control Function
1.	Main supply fans (HVS-4A,4B)	*	*	*			Start
2.	Supply air dampers to Engineered Safety Features pump room (D-1,D-2,D-3,D-4)			*		HVE-9A,9B	Open
3.	Supply air dampers to remaining areas (D-8A,8B)			*		HVE-9A,9B	Close
4.	Supply air(1) dampers to selected areas (D-7A,7B)			*		HVE-9A,9B	Close
5.	Exhaust air dampers for Engineered Safety Features pump room (D-9A,9B)			*		HVE-9A,9B	Close
6.	Main exhaust air dampers for pipe tunnel (D-12A,12B)			*		HVE-9A,9B	Close
7.	Main exhaust dampers for shutdown heat exchangers (D-5A,5B, D-6A,6B)			*		HVE-9A,9B	Close
8.	Main exhaust						
	a) fans (HVE-10A,10B)	*	*	* (2)		None	Stop
	b) inlet dampers	*	*		*	Interlock with HVE-10A,10B	None

(1) Selected areas: specific branch ducts to corridor as shown on Fig. 9.4-1
(2) Component circuit to be shed by a SIAS per PC/M 83015

TABLE 9.4-8 (Cont'd)

Component	Manual Operation Local	Manual Operation Control Room	SIAS Yes	SIAS No	Interlock	SIAS Control Function
9. ECCS area exhaust						
a) fans (HVE-9A, 9B)	*	*	*		None	Start
b) filter train inlet dampers (D-13, D-15)				*	HVE-9A,9B	See note (2)
c) fan inlet dampers (D-14, D-16)				*	HVE-9A,9B	See note (2)
d) fan outlet dampers (L-7A, 7B)				*	HVE-9A,9B	See note (2)
Electrical and Battery Room Ventilation System						
1. Supply fans (HVS-5A, 5B)	*			*	None	None
2. Room 1A exhaust fans (RV-3, 4) and pressure dampers	*			*	Pressure Dampers	None
3. Room 1B fans (HVE-11, 12)	*			*	None	None
4. Battery rooms 2A & 2B exhaust fans (RV-1, RV-2)	*			*	None	None
Locker and Personnel Areas Ventilation System						
1. Air handling unit for hot and cold locker and shower supply (HVA/ACC-15 &16)	*			*	HVE-5	None
2. Locker Room Personnel areas exhaust fan (HVE-4) and damper (L-5)	*			*	HVA-ACC-15 & 16 L-5	None
3. Locker Room Personnel areas exhaust fan (HVE-5) and damper (L-6)	*			*	HVA/ACC-15 & 16 L-6	None

(2) Dampers are opened or closed from interlocks with HVE-9A, 9B

TABLE 9.4-8 (Cont'd)

Component	Manual Operation Local	Manual Operation Control Room	SIAS Yes	SIAS No	Interlock	SIAS Control Function
Radio-Chem Lab., Health Physics Count Room Instrument Room, Repair Shop A/C System						
1. Packaged air conditioning unit HVA/ACC-1	*			*	None	None
Lab Supply and Storage Room, First Aid, and Health Physics A/C System						
1. Packaged heat pump unit HVA/ACC-2	*			*	None	None

TABLE 9.4-9

ECCS AREA VENTILATION SYSTEM FAILURE MODES & EFFECTS ANALYSIS

Component Identification	Failure Mode	Effect on System	Method of Detection	Monitor[1]	Remarks
1. Isolation dampers		a) Loss of one isolation damper	Damper position switch	CRI	Redundant damper series will close
a) D-5A, D-5B, D-6A, D-6B, D-9A, D-9B, D-12A, D-12B	a) One damper fails to close				
b) D-7A, D-7B, D-8A, or D-8B	b) One damper fails to close	b) Loss of one isolation damper	Damper position switch	CRI	Redundant damper series will close
2) Dampers D-1, D-2, D-3 or D-4	One damper fails to open	Loss of make-up air to ECCS area	Damper position switch and high ECCS area negative pressure alarm	CRI	Redundant damper in parallel will open
3. Dampers upstream filtration units D-13, D-15	One damper fails to open	Loss of one ECCS filter unit	Damper position switch and low flow alarm and flow indication and high ECCS pressure alarm	CRI	100 percent capacity redundant unit available
4. Filtration filters HEPA, charcoal	One filter clogs	Loss of one ECCS filter unit	HEPA filter differential pressure indication and alarm. Filter train and charcoal adsorber differential pressure indication	CRI	100 percent capacity redundant unit available
5. Exhaust fans HVE-9A or HVE-9B	One fan fails to start	Loss of one ECCS filter unit	Low flow alarm and flow indication and high ECCS pressure alarm.	CRI	100 percent capacity redundant unit available
6. Suction dampers D-14 or D-16	One damper fails to open	Loss of one ECCS filter unit	Low flow alarm and flow indication and high ECCS pressure alarm	CRI	100 percent capacity redundant unit available
7. Discharge louvers L-7A or L-7B	One louver fails to open	Loss of one ECCS filter unit	Low flow alarm and flow indication and high ECCS pressure alarm	CRI	100 percent capacity redundant unit available
8. Supply fans HVS-4A & 4B	One fan fails to start	Loss of one supply fan to ECCS area	Low flow alarm	CRI	100 percent capacity redundant fan available

[1] CRI = Control Room Indication.

TABLE 9.4-10
REACTOR AUXILIARY BUILDING VENTILATION SYSTEM INSTRUMENT APPLICATIONS

System Parameter and Location	Indication Local	Indication Control Room	Alarm[1] High	Alarm[1] Low	(1) Recording	Control Function	Normal[2] Instrument Range	Operating Range	Instrument[2] Accuracy
Main Supply System (HVS-4A, 4B)									
1) Inlet temperature	*					Local temperature indication		32-93 F	
2) Outlet temperature	*					Local temperature indication		32-93 F	
3) Fan outlet flow switch				*		Alert operator for abnormal operation of supply fan and to start the redundant fan.		.43 in. wg	-
4) Filter differential pressure	*					Alert maintenance personnel for proper main-tenance of filters.		0.3 to 1.0 in. wg	
ECCS Pump Room A & B									
1) Temperature			*		*	Alert operator to check ECCS Ventilation System for proper functioning and check pump room for any fire		43-104°F (Normal) 120 Accident	
2) Pressure (Negative)		*	*			Alert operator to check open doors and check proper functioning of ECCS exhaust system		0 to –3 in. wg	
ECCS Exhaust System (HVE-9A & -9B)									
1) HEPA filter differential pressure	*	*	*		*	Alert operator for proper maintenance of HEPA filter		1.0 to 3 in. wg	
2) Adsorber differential pressure	*				*	Alert operator for abnormal operation of adsorber		1.35 in. wg	
3) Filter train air flow		*			*	Maintain air flow of 30000 cfm		30,000 cfm	

TABLE 9.4-10 (Cont'd)

System Parameter and Location	Indication Local	Indication Control Room	Alarm[1] High	Alarm[1] Low	(1) Recording	Control Function	Normal[2] Instrument Range	Operating Range	Instrument[2] Accuracy
ECCS Exhaust System (Cont'd)									
4) Air flow temperature downstream adsorber					*	Alert operator for any danger of fire.		40-200F	
5) Charcoal bed temperature			*		*	Alert operator for any danger of fire.		40-200F	
6) Air flow temperature upstream HEPA filter					*	Alert operator for any danger of fire.		40-200F	
7) Filter train differential pressure					*	Alert operator for proper maintenance		2.15 to 4.1 in. W.G.	
8) Outlet flow switch				*		Alert operator for abnormal operation of exhaust fan and start redundant fan		.50 in. W.G.	-
Main Exhaust System (HVE-10A & -10B)									
1) HEPA filter differential pressure	*		*			Alert operator for proper maintenance of HEPA filters.		1.0 to 3 in. W.G.	
2) Prefilter differential pressure	*					Alert operator for proper maintenance of Prefilters.		0.55 to 1.5 in. W.G.	
3) Exhaust flow switch	*			*		Alert operator for abnormal operation of exhaust fan and start redundant fan		.695 in W.G.	-
4) Exhaust air flow	*					Maintain air flow	-	-	-
Electrical Equipment & Battery Room Vent System (HVS-5A, -5B & HVE-11, -12)									
1) Inlet Temperature	*					Indicates temperature during balancing.		32-93F	
2) Temperature indication downstream of supply fans	*					Indicates temperature during normal operation		32-93F	

TABLE 9.4-10 (Cont'd)

System Parameter and Location	Indication Local	Indication Control Room	Alarm(1) High	Alarm(1) Low	(1) Recording	Control Function	Normal(2) Instrument Range	Operating Range	Instrument(2) Accuracy
Electrical Equipment & Battery Room Vent System (Cont'd)									
3) Supply air flow switch				*		Alert operator for abnormal operation of fan and start redundant fan		.43 in. W.G.	-
4) Exhaust air flow switch				*		Alert operator for abnormal operation of exhaust fans and start redundant fan		.10 in. W.G.	-
5) Electrical equipment room temperature			*			Alert operator to check ventilation system and check room for any fire		70-104°F	
6) Filter differential pressure	*					Alert maintenance personnel for proper maintenance of pre-filter.		0.28 to 1.0 inch W.G.	
7) Supply air flow switches for Battery Rooms				*		Alert operator for low air supply to Battery Room		0.09 in. W.G.	-
Locker Rooms Personnel Area Ventilation System (HVA/ACC-15 & 16, HVE-4, HVE-5)									
1) Room temperature controller	*					Control air flow during winter conditions		50-100°F	
2) Filter pressure differential of HVA/ACC-15 & 16	*							0.1 to 0.5 inch W.G.	
3) Inlet temperature of HVA/ACC-15 & 16	*							70-93°F	
4) Outlet temperature of HVA/ACC-15 & 16	*							32-93°F	
5) HEPA pressure differential of HVE-5	*							1.0 to 3 in. W.G.	
6) Prefilter pressure differential of HVE-5	*							0.3 to 1 in. W.G.	

TABLE 9.4-10 (Cont'd)

System Parameter and Location	Indication Local	Indication Control Room	Alarm(1) High	Alarm(1) Low	(1) Recording	Control Function	Normal(2) Instrument Range	Operating Range	Instrument(2) Accuracy
Radio Chem Lab Health Physics: Count Room & Instrument Shop Vent System (HVA/ACC-1)									
1) Room temperature	*					Control air conditioning by electronic room thermostat		60-105°F	
2) Mix air temperature	*							59-82°F	
3) Supply air temperature	*							54F	
4) Filter pressure differential	*							0.1 to 0.4 in. W.G.	
First Aid; Lab Supply & Storage and Health Physics Room (HVA/ACC-2)									
1) Room temperature	*					Control air heat pump by "on-off" heating cooling thermostat		60-105°F	
2) Mixed air temperature	*							66.4-78.5°F	
3) Supply air temperature	*							56°F	
4) Filter pressure differential	*							0.1 to 0.4 in. W.G.	
CEDMCS/ERDADS Equipment Enclosure (HVA-5A, B)									
1) Room temperature			*			Provides input to control CEDMCS enclosure temperature		69°F (setpoint) 65°F-69F ≥72°F (Alarm)	
2) Supply air temperature			*			Ensures AHU is cooling properly. Starts standby unit when supply temperature is high with respect to room temperature.		Approximately 10°F below room temperature	

TABLE 9.4-10 (Cont'd)

System Parameter and Location	Indication Local	Indication Control Room	Alarm(1) High	Alarm(1) Low	(1) Recording	Control Function	Normal(2) Instrument Range	Operating Range	Instrument(2) Accuracy
ERDADS Enclosure Standby A/C (TWU-5, TWU-6)									
1) Room temperature			*			Provides cooling upon loss of normal cooling to ERDADS enclosure.		≤ 80 F Thermostat ≥ 85 F alarm	

(1) All alarms and recordings are in the control room unless otherwise indicated.

(2) Instrument ranges are selected in accordance with standard engineering practices. Instrument accuracies are selected such that existing instrument loop performance and safety analysis assumptions remain valid. Where applicable, instrument accuracies are also evaluated for their impact on setpoints in accordance with the FPL Setpoint Methodology.

TABLE 9.4-11

TURBINE BUILDING VENTILATION SYSTEM COMPONENT DESIGN DATA

A. Switchgear Room (HVS-18 & 19)	
Number of fans installed	2
Number of fans normally operating	2
Quality Group	NNS
Seismic Category	Nonseismic
Fan capacity, cfm, each	15,000
Fan static pressure, in. wg	3.5
Fan motor hp	15
B. Chemical Storage (HVE-20)	
Number of fans installed	1
Number of fans normally operating	1
Quality Group	NNS
Seismic Category	Nonseismic
Fan capacity, cfm	1350
Fan static pressure, in. wg	0.4
Fan motor hp	0.33

TABLE 9.4-12

DIESEL GENERATOR BUILDING INTAKE, STRUCTURE
AND COMPONENT COOLING AREA VENTILATION SYSTEMS COMPONENT DESIGN DATA

A. Diesel Generator Building Ventilation System (RV-5 and 6)

(Data given applies to each room 2A and 2B)

Number of fans installed	1
Number of fans normally operating	1
Quality Group	QR
Seismic Category	D
Fan capacity, cfm, each	6600
Fan static pressure, in. wg	0.64
Fan motor hp	3

B. Intake Structure Ventilation System

Number of fans installed (HVE-41A & 41B)	2
Number of fans normally operating	2
Quality Group	C
Seismic Category	I
Fan capacity, cfm, each	19,300
Fan static pressure, in. wg	0.725
Fan motor hp	7 1/2

C. Component Cooling Area Ventilation System

Number of fans installed (HVE-40A & 40B)	2
Number of fans normally operating	2
Quality Group	QR
Seismic Category	D
Fan capacity, cfm, each	11,500
Fan static pressure, in. wg	0.5
Fan motor hp	5

TABLE 9.4-13

DESIGN DATA FOR CONTAINMENT PURGE SYSTEM COMPONENTS (HVE-8A AND 8B)

Number of fans installed	2
Number of fans normally operating	0
Number of fans operating during refueling or shutdown	1
Quality Group	NNS
Seismic Category	Nonseismic
Fan capacity, each, cfm	42,000
Fan static pressure, in wg	8.64 in. wg
Fan motor hp	100
PARTICULATE CONFIGURATION	
Prefilters, Quantity	42
Type	Medium efficiency disposable
Material	Glass fiber filter media
Maximum Pressure Drop, Loaded, in wg	1.0 in. wg
HEPA Filters, Quantity	42
Efficiency, percent	99.97 when tested with 0.3 micron DOP
Standards	Mil-F-51068D, Mil-F-51079A and UL-586 Class I
Material	Pleated glass paper without separators enclosed in stainless steel frame ASTM A268; alternate HEPA filter design includes aluminum separators and cadmium plated carbon steel frame
Maximum Pressure Drop, Loaded, in wg	3.0 in. wg

TABLE 9.4-13 (con't)

DESIGN DATA FOR CONTAINMENT PURGE SYSTEM COMPONENTS (HVE-8A AND 8B)

IODINE REMOVAL CONFIGURATION	
Prefilters, Quantity	42
Flanders Filters, Part No.	00A-0-16-01-1L-Size YY-F
Type	High Efficiency (90-95%)
Material	"A" Glass
Maximum Pressure Drop, Loaded, in wg	1.5 in. wg
Carbon Absorbers, Quantity	42
Flanders Filter Part No.	2 V-N63-G16
Efficiency, Percent	99.9
Material	Carbon: Sutcliffe Speakman Speakman 208C
Maximum Pressure Drop, Loaded in wg	1.3 in. wg
Makeup Air Filters	
Quantity	20
Type	Medium efficiency disposable
Material	Glass fiber filter media
Maximum Pressure Drop, Loaded, in wg	1.0 in. wg

TABLE 9.4-14

DESIGN DATA FOR REACTOR SUPPORT, REACTOR CAVITY AND CEDM COOLING SYSTEM

1. Reactor Support Cooling System (HVE-3A & 3B)

Number of fans installed	2
Number of fans normally operating	1
Quality Group	NNS
Seismic Category	Seismically Qualified
Fan capacity, cfm, each	11,400
Fan static pressure, in. wg	11.09
Fan motor hp	40

2. Reactor Cavity Cooling System (HVS-2A & 2B)

Number of fans installed	2
Number of fans normally operating	1
Quality Group	NNS
Seismic Category	Seismically Qualified
Fan capacity, cfm, each	21,000
Fan static pressure, in. wg	2.5
Fan motor hp	20

3. CEDM Cooling System (HVE-21A and 21B)

Number of fans	2
Number of fans normally operating	1
Quality Group	NNS
Seismic Category	Seismically Qualified
Fan capacity, cfm, each	73,000
Fan static pressure, in. wg	24.0

TABLE 9.4-14 (Cont'd)

3. CEDM Cooling System (Cont'd)

Fan motor, hp	400
Entering water temperature, F	100
Water quantity, flow rate, gpm	520

TABLE 9.4-15

DESIGN DATA FOR CONTINUOUS CONTAINMENT PURGE/
HYDROGEN PURGE SYSTEM COMPONENTS (HVE-7A and 7B)

Fan	
Type	Centrifugal
Quality Group	NNS
Seismic Category	Seismically Qualified
Type of Drive	Direct
Continuous Purge Mode, cfm, each	2000 (2500 intermittent)
Hydrogen Purge Mode, cfm, each	100
Fan static pressure, in. wg	45.65
Fan Motor, hp	40
Air temperature, F	120
Demister	
Quantity	3
Cell size, in.	24 x 24 x 6
Face Velocity, fpm	312.5
Maximum Pressure Drop, Clean, in. wg	1.0
Maximum Pressure Drop, Loaded, in. wg	2.0
Entering Air, dry bulb F/relative humidity %	120/100
Efficiency, percent	99 when exposed to water particles of 1 to 5 microns in size
Electric Heaters	
Quantity	1
Size, W x H x D	24 x 32 x 6
Kw	12
No. of Circuits	1
Medium-Efficiency Prefilters	
Quantity	2
Type	Flanders A923L
Cell size, W x H x D	24 x 24 x 12
Cell Arrangement W x H	1 x 2
Access for Filter Loading	Downstream.
Maximum Pressure Drop	
Clean, in. wg	0.49
Loaded, in. wg	1.0

TABLE 9.4-15 (Cont'd)

<u>HEPA Prefilters</u>	
Quantity	2
Maximum Pressure Drop	
Clean, in. wg	1.0
Loaded, in. wg	3.0
Efficiency, percent	99.97 when tested with 0.3 micron DOP
Material	Pleated glass paper without separators enclosed in stainless frame ASTM A268 alternate design includes aluminum separators
Cell Size, in. (W x H x D)	24 x 24 x 11.5 deep
Cell Arrangement	1 wide x 2 high
Standards	Mil-F-51068D, Mil-F-51079A and UL-586 Class I, ASME AG-1
<u>Charcoal Adsorbers</u>	
Number of beds	2
Make and Type	CVI HECA module
Cell Construction	Vertical
Material	Adsorber: activated coconut shell; charcoal enclosure: stainless steel ASTM A240 Type 304
Bulk density (bone dry), g/ml	0.38 minimum
Loading capacity	2.5 mg of iodine per gram of charcoal
Amount of Charcoal, lbs	600
Particle Size Distribution	10 through 14 mesh
Plenum Size, in.	36 Wide x 84 High x 60 Deep
Bed Arrangement	2 Wide x 1 High
Bed Thickness, in. nominal	2
Efficiency, percent	99 minimum in accordance with ANSI N509-1976
Maximum Pressure Drop, in. wg	1.35
Type of Loading	Overhead hopper

TABLE 9.4-15 (Cont'd)

HEPA After Filters	
Quantity	2
Cell Size, in. (W X H X D)	24 x 24 x 11.5
Cell Arrangement	1 wide x 2 high
Maximum Pressure Drop	
Clean, in. wg	1.0
Loaded, in. wg	3.0
Efficiency, percent	99.97 when tested with 0.3 micron DOP
Material	Pleated glass paper without separators enclosed in stainless steel frame ASTM A268 alternate design includes aluminum separators
Standards	Mil-F-51068D, Mil-F-51079A and UL-586 Class I ASME AG-1

TABLE 9.4-16

COMPARISON OF NORMAL VENTILATION FILTRATION SYSTEMS WITH REGULATORY POSITIONS OF REGULATORY GUIDE 1.140 (R1)

Regulatory Position	RAB Main Exhaust (HVE – 10A&10B)		Containment Purge (HVE – 8A&8B)	Continuous Containment H_2 Purge (HVE-7A&7B)	Fuel Pool Exhaust (HVE-16A&16B)	Fuel Handling Building Exhaust (HVE-15)
1a	Comply		Comply	Comply	Comply	Comply
1b	Atmospheric cleanup systems for normal ventilation are located in areas that have radiation Level I or Level II. Therefore, shielding of components of these air clean-up systems and personnel are not required.					
1c	Comply		Comply	Comply	Comply	Comply
1d	Comply		Comply	Comply	Comply	Comply
2a	Heater	- No	No	Yes	No	No
	Prefilters	- Yes	Yes	Yes	Yes	Yes
	Pre-HEPA Filters	- Yes	Yes	Yes	Yes	Yes
	Iodine Adsorber	- No	No	Yes	No	No
	After HEPA Filters	- No	No	Yes	No	No
	Fan	- Yes	Yes	Yes	Yes	Yes
	Ductwork/ Instrumenation	- Yes	Yes	Yes	Yes	Yes

Note: Except for Continuous Containment/H_2 Purge, atmospheric cleanup systems are designed to remove only particulate matter, therefore the heater, charcoal adsorber and HEPA afterfilter are not required.

TABLE 9.4-16 (Cont'd)

Regulatory Position	RAB Main Exhaust (HVE – 10A&10B)	Containment Purge (HVE – 8A&8B)	Continuous Containment H_2 Purge (HVE-7A & 7B)	Fuel Pool Exhaust (HVE-16A&16B)	Fuel Handling Building Exhaust (HVE-15)
2b (Note b)	Air Capacity (CFM) - 89,730 (Note a)	42,000 (Note a)	2,000/2,500	10,000	9,700
	Filter Arrangement (High x Wide) - 6x13	6x7	2x1	3x3	3x3
	Service Platform and Ladder @ 3 HEPA high - Yes (Fixed)	Yes (Fixed)	Not Required	Not Required	Not Required
	No. of trains - 1 (Note a)	1 (Note a)	1	1	1
	Note: a) The reason to limit the flow to 30,000 CFM is to have an arrangement of 3 HEPA high x 10 HEPA wide for maintenance purposes. Since fixed platforms with ladders are provided at 3 HEPA high, multiple trains of 30,000 CFM are not required. b) The design and procurement of normal ventilation systems were completed before the issuance of Reg Guide 1.140 on October, 1979.				
2c	Comply	Comply	Comply	Comply	Comply
2d	Comply	Comply	Comply	Comply	Comply
2e	Comply	Comply	Comply	Comply	Comply
2f	Comply	Comply	Comply	Comply	Comply
3a	Not Applicable	Not Applicable	Comply	Not Applicable	Not Applicable
3b	Comply	Comply	Comply	Comply	Comply
3c	Comply	Comply	Comply	Comply	Comply
3d	Comply	Comply	Comply	Comply	Comply
3e	Comply	Comply	Comply	Comply	Comply
3f	Comply except as noted*	Comply except as noted*	Comply except as noted*	Comply except as noted**	Comply except as noted**
	Note: *Ducts are balanced within 10 percent of the design air flow ** Ducts are balanced within -10 percent and +25 percent of the design air flow				
3g	Not Applicable	Not Applicable	Comply	Not Applicable	Not Applicable
3h	Not Applicable	Not Applicable	Comply	Not Applicable	Not Applicable

TABLE 9.4-16 (Cont'd)

Regulatory Position	RAB Main Exhaust (HVE – 10A&10B)	Containment Purge (HVE – 8A&8B)	Continuous Containment/ H_2 Purge (HVE-7A & 7B)	Fuel Pool Exhaust (HVE-16A&16B)	Fuel Handling Building Exhaust (HVE-15)
3i	Comply	Comply	Comply	Comply	Comply
3j	Comply	Comply	Comply	Comply	Comply
3k	Comply	Comply	Comply	Comply	Comply
3l Note (a)	Comply	Comply	Comply	Comply	Comply
3m	Comply	Comply	Comply	Comply	Comply
4a	A permanent service gallery of 3 feet is provided. Service space is adequate for removal of largest component of the system		Comply	Comply	Comply
4b	Comply	Comply	Comply	Comply	Comply
4c	Comply	Comply	Comply	Comply	Comply
4d	Comply	Comply	Comply	Comply	Comply
5a	Comply	Comply	Comply	Comply	Comply
5b	Comply	Comply	Comply	Comply	Comply
5c	Comply	Comply	Comply	Comply	Comply
5d	Not Applicable	Not Applicable	Comply	Not Applicable	Not Applicable
6a	Not Applicable	Not Applicable	Comply	Not Applicable	Not Applicable
6b	Not Applicable	Not Applicable	Comply	Not Applicable	Not Applicable

Note (a) Dampers and balancing dampers are designed and constructed in accordance with the industry and manufacturers standards, as required by ANSI N509-1976 Paragraph 5.9.3.2 for Construction Class B dampers. The valves utilized as shut-off devices are designed in accordance with ASME Section III and ANSI-B31.1, therefore in compliance with the requirements of ANSI-N509-1976 Paragraph 5.9.3 for construction Class A devices

Refer to Drawing
2998-G-862

FLORIDA POWER & LIGHT COMPANY
ST. LUCIE PLANT UNIT 2

HVAC - AIR FLOW DIAGRAM

FIGURE 9.4-1

Refer to Drawing
2998-G-879 SH 2

FLORIDA POWER & LIGHT COMPANY
ST. LUCIE PLANT UNIT 2

HVAC - CONTROL DIAGRAMS -
SHEET 2

FIGURE 9.4-2

DELETED

FLORIDA POWER & LIGHT COMPANY
ST. LUCIE PLANT UNIT 2

FIGURE 9.4-3

DELETED

FLORIDA POWER & LIGHT COMPANY
ST. LUCIE PLANT UNIT 2

FIGURE 9.4-4

DELETED

FLORIDA POWER & LIGHT COMPANY
ST. LUCIE PLANT UNIT 2

FIGURE 9.4-5

DELETED

FLORIDA POWER & LIGHT COMPANY
ST. LUCIE PLANT UNIT 2

FIGURE 9.4-6a

DELETED

FLORIDA POWER & LIGHT COMPANY
ST. LUCIE PLANT UNIT 2

FIGURE 9.4-6b

DELETED

FLORIDA POWER & LIGHT COMPANY
ST. LUCIE PLANT UNIT 2

FIGURE 9.4-7

DELETED

FLORIDA POWER & LIGHT COMPANY
ST. LUCIE PLANT UNIT 2

FIGURE 9.4-8

Refer to Drawing
2998-G-878

FLORIDA POWER & LIGHT COMPANY
ST. LUCIE PLANT UNIT 2

HVAC - CONTROL DIAGRAMS -
SHEET 1

FIGURE 9.4-9

DELETED

FLORIDA POWER & LIGHT COMPANY
ST. LUCIE PLANT UNIT 2

FIGURE 9.4-10

Refer to Drawing
2998-G-879 SH 3

FLORIDA POWER & LIGHT COMPANY
ST. LUCIE PLANT UNIT 2

HVAC - CONTROL DIAGRAMS -
SHEET 3

FIGURE 9.4-11

9.5 OTHER AUXILIARY SYSTEMS

9.5.1 FIRE PROTECTION PROGRAM

EC282743

The fire protection program is based on the NRC requirements and guidelines, Nuclear Electric Insurance Limited (NEIL) Property Loss Prevention Standards and related industry standards. With regard to NRC criteria, the fire protection program meets the requirements of 10 CFR 50.48(c), which endorses, with exceptions, the National Fire Protection Association's (NFPA) 805, "Performance-Based Standard for Fire Protection for Light Water Reactor Electric Generating Plants – 2001 Edition. St. Lucie Nuclear Plant Unit 2 has further used the guidance of NEI 04-02, "Guidance for Implementing a Risk-Informed, Performance-Based Fire Protection Program under 10 CFR 50.48(c)" as endorsed by Regulatory Guide 1.205, "Risk-Informed, Performance Fire Protection for Existing Light-Water Nuclear Power Plants."

Adoption of NFPA 805, "Performance-Based Standard for Fire Protection for Light Water Reactor Electric Generating Plants", 2001 Edition in accordance with 10 CFR 50.48(c) serves as the method of satisfying 10 CFR 50.48(a) and General Design Criterion 3. Prior to adoption of NFPA 805, General Design Criterion 3, "Fire Protection" of Appendix A, "General Design Criteria for Nuclear Power Plants," to 10 CFR Part 50, "Licensing of Production and Utilization Facilities," was followed in the design of safety and non-safety related structures, systems, and components, as required by 10 CFR 50.48(a).

NFPA 805 does not supersede the requirements of GDC 3, 10 CFR 50.48(a), or 10 CFR 50.48(f). Those regulatory requirements continue to apply. However, under NFPA 805, the means by which GDC 3 or 10 CFR 50.48(a) requirements are met may be different than under 10 CFR 50.48(b). Specifically, whereas GDC 3 refers to SSCs important to safety, NFPA 805 identifies fire protection systems and features required to meet the Chapter 1 performance criteria through the methodology in Chapter 4 of NFPA 805. Also, under NFPA 805, the 10 CFR 50.48(a)(2)(iii) requirement to limit fire damage to SSCs important to safety so that the capability to safely shut down the plant is satisfied by meeting the performance criteria in Section 1.5.1 of NFPA 805.

A Safety Evaluation was issued on March 31, 2016 by the NRC, that transitioned the existing fire protection program to a risk-informed, performance-based program based on NFPA 805, in accordance with 10 CFR 50.48(c).

9.5.1.1 DESIGN BASIS SUMMARY

9.5.1.1.1 Defense-In-Depth

EC282743

The fire protection program is focused on protecting the safety of the public, the environment, and plant personnel from a plant fire, and its potential effect on safe reactor operations. The fire protection program is based on the concept of defense-in-depth. Defense-in-depth shall be achieved when an adequate balance of each of the following elements is provided:

1. Preventing fires from starting,

2. Rapidly detecting fires and controlling and extinguishing promptly those fires that do occur, thereby limiting fire damage,

3. Providing an adequate level of fire protection for structures, systems, and components important to safety, so that a fire that is not promptly extinguished will not prevent essential plant safety functions from being performed.

9.5.1.1.2 NFPA 805 Performance Criteria

The design basis for the fire protection program is based on the following nuclear safety and radiological release performance criteria contained in Section 1.5 of NFPA 805:

- Nuclear Safety Performance Criteria. Fire protection features shall be capable of providing reasonable assurance that, in the event of a fire, the plant is not placed in an unrecoverable condition. To demonstrate this, the following performance criteria shall be met.

    a. Reactivity Control. Reactivity control shall be capable of inserting negative reactivity to achieve and maintain subcritical conditions. Negative reactivity inserting shall occur rapidly enough such that fuel design limits are not exceeded.

    b. Inventory and Pressure Control. With fuel in the reactor vessel, head on and tensioned, inventory and pressure control shall be capable of controlling coolant level such that subcooling is maintained such that fuel clad damage as a result of a fire is prevented for a PWR.

    c. Decay Heat Removal. Decay heat removal shall be capable of removing sufficient heat from the reactor core or spent fuel such that fuel is maintained in a safe and stable condition.

    d. Vital Auxiliaries. Vital auxiliaries shall be capable of providing the necessary auxiliary support equipment and systems to assure that the systems required under (a), (b), (c), and (e) are capable of performing their required nuclear safety function.

    e. Process Monitoring. Process monitoring shall be capable of providing the necessary indication to assure the criteria addressed in (a) through (d) have been achieved and are being maintained.

- Radioactive Release Performance Criteria. Radiation release to any unrestricted area due to the direct effects of fire suppression activities (but not involving fuel damage) shall be as low as reasonably achievable and shall not exceed applicable 10 CFR, Part 20, Limits.

Chapter 2 of NFPA 805 establishes the process for demonstrating compliance with NFPA 805.

Chapter 3 of NFPA 805 contains the fundamental elements of the fire protection program and specifies the minimum design requirements for fire protection systems and features. EC282743

Chapter 4 of NFPA 805 establishes the methodology to determine the fire protection systems and features required to achieve the nuclear safety performance criteria outlined above. The methodology shall be permitted to be either deterministic or performance-based. Deterministic requirements shall be “deemed to satisfy” the performance criteria, defense-in-depth, and safety margin and require no further engineering analysis. Once a determination has been made that a

fire protection system or feature is required to achieve the nuclear safety performance criteria of Section 1.5, its design and qualification shall meet the applicable requirement of Chapter 3.

9.5.1.1.3 Codes of Record

The codes, standards and guidelines used for the design and installation of plant fire protection systems are listed in the DBD-FP-1, Fire Protection Design Basis Document.

9.5.1.2 SYSTEM DESCRIPTION

9.5.1.2.1 Required Systems

Nuclear Safety Capability Systems, Equipment, and Cables

Section 2.4.2 of NFPA 805 defines the methodology for performing the nuclear safety capability assessment. The systems, equipment, and cables required for the nuclear safety capability assessment are contained in PSL-ENG-SEMS-98-067, St. Lucie Unit 2 Nuclear Safety Capability Assessment Basis Document; 2998-B-048, Unit 2 Nuclear Safety Capability Assessment (NSCA); 2998-B-049, Unit 2 Essential Equipment List; and St. Lucie Plants Units 1 & 2 EDISON Cable and Raceway Database.

Fire Protection Systems and Features

Chapter 3 of NFPA 805 contains the fundamental elements of the fire protection program and specifies the minimum design requirements for fire protection systems and features. Compliance with Chapter 3 is documented in DBD-FP-1, Fire Protection Design Basis Document.

Chapter 4 of NFPA 805 establishes the methodology and criteria to determine the fire protection systems and features required to achieve the nuclear safety performance criteria of Section 1.5 of NFPA 805. These fire protection systems and features shall meet the applicable requirements of NFPA 805 Chapter 3. These fire protection systems and features are documented in DBD-FP-1, Fire Protection Design Basis Document.

Radioactive Release

Structures, systems, and components relied upon to meet the radioactive release criteria are documented in DBD-FP-1, Fire Protection Design Basis Document.

9.5.1.2.2 Definition of “Power Block” Structures

Where used in NFPA 805 Chapter 3 the terms “Power Block” and “Plant” refer to structures that have equipment required for nuclear plant operations. For the purposes of establishing the structures included in the fire protection program in accordance with 10 CFR 50.48(c) and NFPA 805, the plant structures listed in DBD-FP-1, Fire Protection Design Basis Document are considered to be part of the ‘powerblock.’ EC282743

9.5.1.3 SAFETY EVALUATION

The DBD-FP-1, Fire Protection Design Basis Document, documents the achievement of the nuclear safety and radioactive release performance criteria of NFPA 805 as required by

10 CFR 50.48(c). This document fulfills the requirements of Section 2.7.1.2 “Fire Protection Program Design Basis Document” of NFPA 805. The document contains the following:

- Identification of significant fire hazards in the fire area. This is based on NFPA 805 approach to analyze the plant from an ignition source and fuel package perspective.
- Summary of the Nuclear Safety Capability Assessment (at power and non-power) compliance strategies.
  - Deterministic compliance strategies
  - Performance-based compliance strategies (including defense-in-depth and safety margin)
- Summary of the Non-Power Operations Modes compliance strategies.
- Summary of the Radioactive Release compliance strategies.
- Summary of the Fire Probabilistic Risk Assessments.
- Key analysis assumptions to be included in the NFPA 805 monitoring program.

9.5.1.4 FIRE PROTECTION PROGRAM DOCUMENTATION, CONFIGURATION CONTROL AND QUALITY ASSURANCE

In accordance with Chapter 3 of NFPA 805 a fire protection plan documented in 1800022, Fire Protection Plan, defines the management policy and program direction and defines the responsibilities of those individuals responsible for the plan’s implementation. 1800022, Fire Protection Plan:

- Designates the senior management position with immediate authority and responsibility for the fire protection program.
- Designates a position responsible for the daily administration and coordination of the fire protection program and its implementation.
- Defines the fire protection interfaces with other organizations and assigns responsibilities for the coordination of activities.
- Identifies the appropriate authority having jurisdiction for the various areas of the fire protection program.
- Identifies the procedures established for the implementation of the fire protection program, including the post-transition change process and the fire protection monitoring program. EC282743
- Identifies the qualifications required for various fire protection program personnel.
- Identifies the quality requirements of Chapter 2 of NFPA 805.

Detailed compliance with the programmatic requirements of Chapters 2 and 3 of NFPA 805 are contained in DBD-FP-1, Fire Protection Design Basis Document. EC282743

9.5.2 COMMUNICATIONS SYSTEMS

9.5.2.1 Design Basis

The communications systems are designed to assure reliable and diverse onsite and offsite communications services for normal operation and emergency conditions under maximum noise levels, and are illustrated on Figures 9.5-1, 9.5-3 and Table 9.5-6.

9.5.2.2 System Description

The onsite communications systems are as follows:

a. Private branch telephone exchange (PBX)

b. Page/party line communication (PA)

c. Sound powered head sets

d. Site alarm signals

e. Two-way radio systems

The offsite communications systems are as follows:

a. Private branch telephone exchange (PBX)

b. Two-way radios

c. Emergency Notification System (TMI Action Item III A.3.3)

d. Health Physics Network Dial up communications link (TMI Action Item III A.3.3)

e. Cellular telephones

9.5.2.2.1 Onsite Communications Systems

The private branch telephone exchange (PBX) system consists of a main module located in the Unit 1 service building telecommunications room, a remote module in the Unit 2 south service building telephone equipment room, telephone sets, environmental support equipment, fiber optic cable, associated equipment and wires. The PBX system is considered non safety related; however, some aspects of the Quality Assurance program are applied to the design and installation due to its importance to plant operation. The system has capacity to provide onsite and offsite telephone communication for both nuclear units and the simulator building.

The onsite communication system includes the control room, remote shutdown room, offices, and labs. Offsite communication includes two lines for telemetry, load control and supervisory control in addition to the telephone company central office voice trunks. In addition, normal plant telephone service is provided. In the event of complete loss of all plant telephone service a telephone line is provided for communication between the site and the system load dispatch office.

The two PBX modules are linked using fiber optic cable routed in dedicated conduit.

The environment for both the main and remote units should be maintained within the recommended operating limits of ambient room temperature and relative humidity. To accomplish this goal the Unit 1 telecommunications room is provided with two fully redundant HVAC units. The Unit 2 telephone room is provided with cooling from the South Service Building HVAC units.

The page/party line communication system consists of a solid state combined speaker and handset station amplifier, speakers and associated equipment and wiring. The system provides one page and five party line channels. The page/party system for St. Lucie Unit 2 is interfaced with the St. Lucie Unit 1 page/party system through a merge/isolate assembly.

The sound powered communication system consists of sound powered headsets, remote jack stations and wiring. Jack stations are located in vital areas where communication is required for remote shutdown. A dedicated headset is stored adjacent to each jack station. The system provides back-up communication in the unlikely event of a complete loss of normal communication.

The site alarm signals are incorporated into the page/party system. Site evacuation, containment evacuation, E-Plan activation and fire alarm signals are provided by tone generators. The tone generators are remotely controlled by the control room operator pushbutton stations. High containment radiation initiates a containment evacuation signal. Two emergency pushbutton stations in the containment can also initiate this signal. The tone generator signals are fed to the page/party station amplifiers and broadcast through the speaker system in the entire site. The page/party system is provided with a volume override feature to assure that maximum sound dispersion is provided in the event of a site alarm.

A diverse two-way radio system is provided for normal and emergency onsite and near-site communications.

9.5.2.2.2 Offsite Communications Facilities

Offsite commercial telephone service is provided by a private branch telephone exchange (PBX) system as described above.

As a back-up to the telephone lines, diverse and redundant radio and cellular telephone systems can provide emergency communications between required local, state and federal (NRC, FEMA) governmental agencies, as well as various offsite FPL departments and locations. A dedicated two-way radio communication system is also provided for plant security purposes (see Section 13.6).

The Emergency Notification System is a dedicated telephone system linking St. Lucie Unit 2 with the NRC's regional office and the NRC's operations center. To operate this phone the operator need only lift the receiver causing the phones at the NRC to ring automatically. Extensions on this phone line are located in the critical areas which would be manned during emergencies. These areas are the following:

a. Control Room

b. Technical Support Center - Unit 1

c. Emergency Operations Facility

The Health Physics Network is intended for use as the dedicated line between the NRC Headquarters and the St. Lucie Unit 2 site for health physics data transmission during site emergencies and other significant events. Extensions of this dial-up communications link are located in the following areas:

a. Technical Support Center - Unit 1

b. Emergency Operation Facility

Neither the emergency notification system or the health physics network interface with the site PBX system.

9.5.2.3 Systems Evaluation

Communication facilities of the types described are conventional and have a history of reliable operation at Florida Power & Light Company plants.

The availability of the page party/site alarms, two way radio systems, and emergency notification system, cellular telephone system is assured by powering the system from a vital ac bus which has three alternate supplies (See Drawing 2998-G-332, Sheet2);

a. inverter, powered from an emergency MCC

b. voltage regulating transformer, powered from an emergency MCC

c. dc power from station battery

The availability of the PBX system is assured by powering this system from:

a. Main Module - Unit 1 Service Building

   The telephone system power panel is located in the Service Building and fed from the PP-135 located in Unit 1 North Security Building. PP-135 is supplied from the Emergency Diesel Generator upon loss of AC power.

b. Remote Module - Unit 2 South Service Building

   This module is supplied from a power panel in the South Service Building. In the event of loss of normal AC power, the power panel will be supplied from the South Service Building diesel generator.

c. HVAC - Unit 1 Service Building

   The normal HVAC supply for the Unit 1 Service Building Telecommunications Room is from the North Service Building chiller unit. Backup AC for the telecommunication room will be supplied from PP-135 in the North Security Building, which will be powered from the emergency diesel generator upon loss of AC power.

d. HVAC - Unit 2 South Serivce Building Telephone Room

The Unit 2 telephone room is provided with cooling from the South Service Building HVAC units.

Diverse offsite and onsite communications systems ensure that plant communications are maintained. In general, each of the communication systems have their interconnection cables run in a dedicated conduit system to minimize the probability of common mode failure. The unique design features that will assure functionally operable onsite communications is described below.

The Sound Powered Telephone System will be available for inplant communications from the Control Room and between various locations throughout the plant. This system uses voice sound power to generate the communication signal and does not require external power, making it immune to disruption in the event of loss of all onsite power.

The availability of Health Physic's Network Dial up communications link and the PBX system is assured by the inherent back up systems provided by Southern Bell.

The Page Party/Site Alarm System has the following features:

1. The various instruments are distributed throughout the plant. Should one instrument fail, an alternate instrument would be available within a short distance.

2. Each instrument is individually fused. Should a component fail that would overload the power, the individual instrument fuse would open the circuit preventing disruption to the entire system.

3. The Page Party/Site Alarm System electrical cables are routed through dedicated conduits in the manholes with sound powered cables (in the security ductbank from the main plant area to the outlying building the Page Party and two way radio communication cable run in the same manhole). Damage to the Page Party/Site Alarm conduit and cables would not disrupt other communication systems. Routing of more than two communication systems within one manhole or raceway system is not permitted to assure that the loss of any one raceway system will not jeopardize total site communications.

4. The bulk of the interconnecting cabling is sectionalized at a main terminal box by building and/or areas; in addition to that the Reactor Auxiliary, Reactor Containment and Turbine Buildings (i.e., section cables) are designed to ring loops, some remote instruments are fed radially. Should an interconnecting cable be severed in any loop, the equipment would continue to function, being connected by the remaining parts of the loop.

5. In the page/party system, if a line is severed producing an open circuit the system is sectionalized into two parts; if the line is shorted, service may be impaired or totally lost until it is repaired.

6. Disconnects are provided to isolate and remove any section/loop from the system should a malfunction introduce noise into the entire system. If communications are disrupted, the malfunctioning section/loop can be removed from the system.

7. On loss of power from the vital 120V AC Bus, the Page Party/Site Alarm signals will not function.

The PBX Telephone System has the following features:

1. Various instruments are distributed throughout the Plant. Should one instrument fail, an alternate instrument would be available within a short distance.

2. The PBX system electrical cables are routed through separate conduit from the other communication systems, other than when mixed with radio page circuits in manholes/conduits as required. Routing of more than two communication systems within one manhole or raceway system is not permitted to assure that the loss of any one raceway system will not jeopardize total site communication.

3. On loss of power, the PBX system will remain operable powered from its back up emergency power source.

The Sound Powered Telephone System has the following features:

1. The system consists of two individual circuits in a single cable; should one circuit fail, the other circuit will be available.

2. The sound powered phone system cables are routed through separate conduits from the other communications system, other than when mixing with PA cables in manholes. Routing of more than two communications systems within one manhole or raceway system is not permitted to assure that the loss of any one raceway system will not jeopardize total site communications. If a line is severed producing an open circuit, the communication channel is sectionalized. If the line is shorted, service may be impaired or totally lost.

3. The individual instrument is connected into the system via a telephone jack. Should an instrument fail, it could be disconnected and another instrument connected.

4. The sound powered system does not require external power and is immune to power loss.

The Two-Way-Radio-System has the following features:

1. The radio trunking system operates on the 900 MHz frequency band, and is the main source for onsite two-way radio communications. The repeaters are in a separate structure west of the plant, with an emergency generator and air conditioning. The antennas are mounted on an adjacent tower. In addition, Unit 1 and Unit 2 each have a 900 MHz transceiver that can provide "talk-around" capability onsite using hand held radios if the trunking system fails.

2. Redundancy and diversity is provided such that the loss of one radio system will not result in the total loss of all onsite or offsite radio communications.

A fixed cellular telephone transceiver with a phoneset in the control room is installed on RAB elevation 43 feet. The antenna is installed on the RAB roof. The power source is from 120 Volt

ac Vital Bus #1. This system provides a telephone link which is independent of the offsite commercial telephone wire system.

Routing of more than two communications systems within one manhole or raceway system is not permitted to assure that the loss of any one raceway system will not jeopardize total site communications.

Working stations vital to attain a safe plant shutdown are listed in Table 9.5-6. Also indicated in this table are the estimated maximum sound levels at each working station, the communications facilities provided at or in the vicinity of each working station and the maximum noise level that could exist at each working station and still maintain effective communication with the control and Hot Shutdown Rooms.

During emergency plant operation, including transients, fire, accidents and loss of offsite power conditions, the plant communication systems provide effective two-way communication between all plant personnel in all vital working stations/areas in the plant.

9.5.2.4 Inspection and Testing

The systems assure reliable onsite and offsite communications for normal and emergency conditions. Routine use of the communication systems provides a check of their continued availability. Pre-operation procedures will verify that there is adequate and understandable communications.

9.5.3 LIGHTING SYSTEMS

9.5.3.1 Design Bases

The lighting systems and their power sources are designed to provide sufficient illumination to enable the plant operators to perform required activities and to move safely through the plant. Lighting systems are designed to provide illumination levels that equal or exceed those recommended in the Illuminating Engineering Society Handbook (4th Edition).

9.5.3.2 System Description

Indoor lighting is provided by fluorescent, incandescent, light emitting diode (LED) or high intensity discharge (HID) luminaries. Incandescent lighting is used in the containment and fuel pool area, except in underwater applications in the fuel pool and refueling cavity in which quartz lighting is used. The housing for the fixtures inside the containment do not contain aluminum. Lighting supports inside the control room are seismically analyzed. The outdoor lighting is by LED or HID controlled by a photoelectric cell. A control room selector switch allows manual or photoelectric operation of the lighting. Specific outdoor lighting (e.g., doorway lighting) is locally switched.

Plant lighting is divided into three main systems, which are defined as follows:

a. Normal AC Lighting System: The Normal AC Lighting System provides lighting in all plant areas and is operable during normal plant operation. Power to the Normal AC Lighting System is provided through the nonsafety related electrical auxiliary system. The Normal AC Lighting System provides approximately 80 percent of the plant lighting load.

b. Normal/Emergency AC Lighting System: Where continuity of lighting is desirable for safe operation or shutdown of the plant, Normal/ Emergency AC Lighting is used in addition to the Normal AC Lighting. Normal/Emergency AC Lighting provides the necessary lighting following a loss of offsite power. A redundant system consisting of two separate and distinct trains (A and B) of Normal/Emergency AC Lighting is provided and is energized in all plant operating modes. Power to the Normal/Emergency AC Lighting System is through the safety related electrical auxiliary system. When the plant is in the normal operating mode, power to the safety related electrical auxiliary system is provided by either the start- up/standby transformers or the auxiliary transformers. Upon loss of offsite power, each train of Normal/Emergency AC Lighting is re-energized from its associated diesel generator source. The Normal/Emergency AC Lighting System provides approximately 20 percent of the plant lighting load. Access/egress areas are illuminated by the Normal/Emergency AC Lighting System.

   The normal emergency lighting design provides normal emergency lighting throughout the plant and outlying areas and specifically in those areas indicated below:

   a. Main Control Room
   b. Hot Shutdown Area
   c. Shutdown Cooling System Area
   d. Low Pressure Safety Injection Pump Area
   e. High Pressure Safety Injection Pump Area
   f. Containment Spray Pump Area
   g. Boric Acid Tank and Pump Area
   h. Auxiliary Feedwater Pump Area
   i. Component Cooling Water Pump Area
   j. Diesel Generator Room
   k. Essential Switchgear Rooms
   l. Electrical Equipment Distribution Areas

   The normal emergency lighting system assures that in the unlikely event of a loss of offsite power, adequate plant lighting is available for plant and personnel safety.

c. DC Emergency Lighting System: Following the momentary loss of the Normal/Emergency AC Lighting System (until the Normal/Emergency Lighting system is re-energized from the diesel generator), illumination is provided by the DC Emergency Lighting System. In the control room and hot shutdown control panel area, this lighting system consists of two completely separate and

redundant systems (A and B), each powered from one of the safety related 125V batteries. In the balance of plant safety related areas and access/egress routes to or from these areas DC emergency lighting is provided by self- contained storage battery lighting fixture assemblies.

9.5.3.3 Failure Analysis

Following loss of normal ac power, the DC self contained storage battery lighting fixtures and both trains of the redundant DC Emergency Lighting System are automatically energized; failure of one train does not result in the failure of the other train. Approximately 10 seconds after the loss of normal ac power, both trains of the redundant Normal/Emergency Lighting System receive power from the diesel generators; failure of one train does not result in the failure of the other train. The 125V DC Emergency Lighting System then is automatically de-energized by a hold out relay mounted on each DC emergency lighting panel and by automatic operation of the individual self- contained storage battery lighting fixture assemblies.

Since necessary lighting for safe shutdown and response to fires is provided by two ac trains and a dc backup, no single failure can prevent sufficient illumination at all times.

9.5.4 DIESEL GENERATOR FUEL OIL STORAGE AND TRANSFER SYSTEM

9.5.4.1 Design Bases

The Diesel Generator Fuel Oil System is designed to:

a. provide oil storage capacity for at least seven days power operations of one diesel generator set in accordance with the requirements of IEEE 308-1974, "IEEE Standard Criteria for Class 1E Power Systems for Nuclear Power Generating Stations, "and ANSI N195-1976," Fuel Oil System for Standby Diesel Generators.

b. maintain fuel supply to at least one diesel generator set, assuming a single active or passive failure of the system coincident with loss of offsite power.

c. meet seismic Category I and Quality Group C requirements (owner optional upgrade, see Table 3.2-1).

d. withstand maximum flood levels or tornado wind loadings without loss of function.

9.5.4.2 System Description

The Diesel Fuel Oil System is shown on Figures 9.5-6, 9.5-7 and 9.5-8. The design data is found in Table 9.5-1.

The Diesel Generator Fuel Oil System is used to transfer diesel fuel oil from the onsite storage tanks to the day tanks which supply the emergency diesel generator sets. Figure 9.5-6 shows the fuel oil storage tanks and transfer pumps which supply the diesel day tanks. A diagram of the fuel oil system from the day tanks to the engines is shown on Figures 9.5-7 and 9.5-8.

Two subsystems are provided, each consisting of a diesel oil storage tank, transfer pump, two day tanks, interconnecting piping and valves and associated instrumentation and controls. In

normal operation, subsystem A serves diesel generator A and subsystem B serves diesel generator B. However, the two subsystems can be cross-connected at the transfer pumps. Electrical power necessary for operation on each subsystem is supplied from the associated diesel generator bus.

The main components of the system are the following:

a. Diesel oil storage tanks - Two tanks are provided in the system. One diesel oil storage tank and two day tanks (per engine set) are provided with a combined usable volume which is sufficient for at least 7 days accident load operation of one diesel generator set as required by IEEE 308-1974 and ANSI N195-1976.

b. Diesel oil transfer pumps - One transfer pump is provided in each subsystem to transfer oil from the storage tanks to the day tanks.

c. Day tanks - Two day tanks in each subsystem provide fuel oil to their associated diesel generator set. Fuel oil to each diesel generator is supplied from its respective day tank by a dc motor driven fuel pump and an engine driven fuel pump. Two day tanks provide a usable volume which is sufficient for at least 1 hour 100% load operation of one diesel generator set as required by ANSI N195-1976.

   The Diesel Generator set is provided with two skid mounted diesel oil day tanks. These tanks are located at the ends of the Diesel Generator set thereby providing physical separation from the hot surfaces such as the 22 inch Diesel Generator Exhaust Lines which are located in the center of the DG set.

   The fuel oil piping between the day tanks is basically routed around the base of the diesel in order to minimize exposure to hot surfaces. In addition, all high temperature lines in the Diesel Generator room are insulated in order to prevent oil exposure to hot surfaces. Due to the Diesel Generator design, there are no open flames in the Diesel Generator Building.

d. Interconnecting piping and valves - Cross-connection lines with locked closed valves are provided for supplying oil to the subsystems. The cross-connection lines are provided at both the diesel oil transfer pump suction and discharge. Additionally, a two inch line with two locked closed valves provides a cross-connection capability between Unit 1 and 2 diesel oil transfer pump discharge headers. EC285823

e. Solenoid valves - Solenoid valves in the transfer lines from the storage tank to the day tanks prevent the day tanks from overflowing.

f. As minimum the engine mounted piping as designed, fabricated, and installed by the engine manufacturer has been analyzed for design stresses and compared with the allowable stresses permitted by ANSI B31.1 Power Piping. The loads include mechanical, pressure, thermal and seismic forces. The results of the design study shows adequate margins of safety when compared to the allowable stresses contained in ANSI B31.1.

Fuel oil is supplied to the day tank at each engine by the fuel oil transfer system through a solenoid valve at each day tank. Fuel oil is drawn from the day tank through a check valve and the duplex strainer by the dc motor driven fuel pump and/or the engine driven fuel pump.

From the pump discharges (4.5 gpm each), fuel oil is directed through a 10 psi relief/check valve, duplex filter and into the engine fuel header. Here the fuel goes to each injector inlet filter and into the injector. All excess fuel oil that is not used passes through the injector outlet filter and returns to the day tank. This excess fuel oil is also used to cool the injector.

To protect the dc motor driven and the engine driven fuel pumps and system components, there is a 50 psi relief valve at the discharge of the dc motor driven pump and a 65 psi system relief valve at the fuel filter block for the engine driven pump to limit fuel oil pressure to 65 psi. Each relief valve provides a recirculation path back to the fuel oil day tank.

Since the system is redundant, failure of either the motor driven pump or the engine driven pump would not result in any deterioration of performance. Therefore, each pump is monitored by a local gauge and a low pressure switch that sounds an alarm.

9.5.4.3 Safety Evaluation

EC285823

The design of the Diesel Generator Fuel Oil System provides electrical and physical separation of components to assure that the system can withstand a single failure. The pumps, tanks, piping and valves in the system are designed to seismic Category I requirements. The equipment is designed to withstand ambient outdoor conditions of heat, humidity, and salt spray at the site. The major portions of the Diesel Oil Storage Tank (DOST) fill and vent lines are located within the seismic Category I DOST Building which is designed against the effects of tornadoes and tornado induced missiles.

The tank fill lines are seismically designed and are entirely located within the DOST Building except for three inch branch connections which penetrate and extend approximately one foot outside the building wall. This is the minimum length compatible with tank refilling operations and minimizes exposure to tornado induced missiles. Both fill lines are seismically qualified up to and including locked closed valves located just inside the storage building wall. The one foot piping run outside the DOST is provided with a closed cap. This design precludes the possibility of water being introduced into the tanks during any adverse environmental conditions. The fill lines terminate two feet above grade.

The tank vent line penetrates and extends approximately one and a half feet outside the DOST Building roof to accommodate the flame arrestor. The minimal extent of the exposed line and its location on the roof greatly reduces the possibility of a tornado missile strike. Loss of the vent line would not impair the tank's ability to store and deliver emergency fuel oil. Each vent line is equipped with a downward pointing goose neck type connection to preclude the entrance of water into the tank during adverse environmental conditions. The vent line terminates approximately 48 feet above grade.

The overflow line vacuum breaker line penetrates and extends approximately three feet outside the DOST Building roof to accommodate the flame arrestor. Loss of the overflow line vacuum breaker line would not impair the tank’s ability to store and delivery emergency fuel oil. Each overflow line vacuum breaker line is equipped with a downward pointing goose neck type connection to preclude the entrance of water into the tank during adverse environmental conditions. The overflow line vacuum breaker line terminates approximately 48 feed above

grade. In the unlikely event of failure of the overflow vent, more than the TS minimum required volume remains.

Components of the Diesel Generator Fuel Oil System including the diesel oil transfer pumps, diesel oil storage tanks, day tanks and associated instrumentation are designed for, or protected from, tornado, winds and tornado driven missiles (see Section 3.3 for a discussion of wind and tornado loadings). The fuel oil transfer pumps and the diesel oil storage tanks are located in an enclosed seismic Category I structure. Day tanks and associated instrumentation are located in the seismic Category I Diesel Generator Building (see Section 3.8 for a discussion on the seismic design of structures). The diesel fuel oil transfer pumps are located above the probable maximum flood level to ensure their operation during floods (for a discussion on water level (flood) design, see Section 3.4). The discharge lines from the transfer pumps exit the Diesel Oil Storage Tank Building above grade, then run underground to the Diesel Generator Building where they rise above grade and enter the Diesel Generator Building. Both the above ground and underground portions of the lines are protected from design basis tornado missiles in accordance with the requirements of UFSAR Section 3.5. The two lines (i.e., both trains) are routed together for approximately 100 feet, at which point they branch off to their respective Diesel Generator Buildings.

The DOST and Diesel Generator (DG) Buildings are provided with an independent and self-contained equipment and floor drainage system. The major fluid contained in these buildings is fuel oil and the drainage system is designed to route and isolate any oil to the outside of both the DOST and DG buildings in the event of a spill or tank overflow. A spill would result if either a Diesel Oil Storage Tank or Diesel Generator Day Tank were to overflow, therefore, the overflow line for each tank is piped directly to a floor drain in the building. Drains from both buildings are then directed underground to a pump box in the yard outside. Maintenance procedures are developed to periodically inspect the box for fluid level; at high level the fluid is disposed of via a portable sump pump. Figure 9.5-6 illustrates the equipment and floor drain system from the tank overflows to the pump box.

A separate drain header is provided for each tank room in the DOST building and these headers are provided with locked closed valves prior to entry into the pump box. This allows for controlled drainage to the DOST rooms in the unlikely event that the worst case accident postulated for fire protection were to occur, i.e., rupture of a storage tank in conjunction with the contents igniting. Separate headers preclude the possibility of backup of fuel oil into one (unaffected) DOST room due to a tank rupture in the other, which could occur with a common header. The locked closed valves ensure that there is no direct path for fuel oil from a ruptured tank to the outside through the pump box or to the DG Building through its drain header. The limiting condition is not considered to occur to the Day Tank in the DG Building since its usable capacity is only ≈ 300 gallons (usable at Diesel Oil Transfer pump stop setting) compared to a maximum storage tank capacity of ≈45,000 gallons, thus a common drain header and locked open valve to the pump box is utilized for the DG building drains.

The Diesel Generator Fuel Oil System for St. Lucie Units 1 and 2 are independently capable of supplying sufficient fuel to their respective diesel generator sets. In addition, a two inch interconnection between Units 1 and 2 can provide additional fuel supply. Redundant locked closed valves ensure that the functionality of the intertie is not compromised.

There is one diesel oil storage tank associated with each diesel generator set. The capability exists to cross connect the two tanks through locked closed valves. One tank can be refilled after aligning the fuel oil system so that the diesel engine will draw fuel from the other tank by

opening the locked closed valves that cross connect the diesel fuel transfer pump discharge piping and by shutting the transfer pump discharge valves on the tank to be filled. The isolated diesel oil storage tank is then capable of accepting oil. Any sediment stirred up by the delivery of oil will settle on the bottom of the tanks. The tank inlet piping is located four inches above the bottom of the tank, thereby assuring that the tank bottom sediment will not be pumped to the diesel generator sets. Once filled, and the oil is allowed to settle, the diesel fuel oil system could then be aligned to its original position.

The precautionary measures taken to assure the quality and reliability of the fuel oil supply for the emergency diesels are as follows:

a. The emergency diesel fuel is purchased as ASTM 2D fuel oil.

b. Diesel fuel oil sampling and testing is performed in accordance with the Diesel Fuel Oil Testing Program required by Technical Specifications.

Further precautions taken to prevent detrimental effects of sediment on diesel performance include wye strainers in the diesel fuel oil piping, a duplex fuel filter and duplex strainer for each diesel. The fuel oil system has been designed to meet the requirements of ANSI-N195, and therefore provisions are also made to detect and remove accumulated water on a periodic basis by the use of a sump located at the bottom of the storage tank. Additionally, growth of algae in the diesel fuel storage tank is prevented by use of a fuel additive which contains a biocide. This control of microbial growth eliminates the formation of the gelatinous masses which could cause fouling of strainers, line and injectors.

A commitment has been obtained from a local fuel oil company to supply fuel oil from the Port Canaveral Terminal on a 24 hour emergency basis. Diesel fuel will be delivered by transport vehicles at the rate of 8,000 gallons per transport and will be delivered within 24 hours of the request. The causeways, separated by as much as 20 miles, join the island to the mainland and ensure that access is available for the fuel oil trucks at either the north or south end of the island. As all roads onsite are above the probable maximum flood level, unfavorable weather could not flood access to the storage tanks.

In the event there are no bridges open which would permit trucking of fuel on to Hutchinson Islands a barge containing an on-board pump and hoses can be chartered from a local fuel oil company to transport diesel fuel from the substantial FP&L inventory at Port Canaveral or Port of Miami to the St. Lucie site in about one day.

The exterior and interior surface of each diesel fuel oil storage tank is commercially sandblasted in accordance with SSPC-SP-10 "Near White Blast Cleaning." All surfaces (except galvanized materials) are then primed with one coat (3-1/2 to 5 mils dry film thickness) of Carbo Zinc 11 as manufactured by the CarboLine Company. The exterior surface of the diesel oil storage tank will also receive two finish coats of a chlorinated rubber type coating applied at 4-6 mils each minimum dry film thickness in order to prevent corrosion. The associated pumps, piping and valves are also cleaned and painted to protect against corrosion.

The St. Lucie Unit 2 design minimizes the use of buried components. The Diesel oil storage tanks are housed in the DOST Building while the Day Tanks are located in the Diesel Generator building. There are no buried pumps or valves within the Diesel Oil Storage and Transfer System.

The only buried component within the Diesel Oil Storage and Transfer System is the two inch piping run between the Diesel Oil Storage Tank and the Day Tanks. This two inch piping is provided with a corrosion resistant coating and is encased within a three inch guard pipe. The guard pipe is also coated with a corrosion resistant coating and is also cathodically protected.

Similar to the issues discussed in NRC Generic Letter 2008-01 and SER 2-05, the presence of unanticipated gas voids within the Diesel Generator Fuel Oil and Transfer System can challenge the ability of the system to perform its design functions due to issues such as gas binding, water hammer, injection delay times, etc. EDG subsystems present little to no opportunity for gas intrusion or air entrainment. Fill, vent, and surveillance operations procedures for the EDG subsystems assure acceptable system performance following maintenance or operational activities that could result in gas void formation. These procedures ensure that the subsystem is left in an operable condition on a monthly basis.

9.5.4.4 Testing and Inspection

The components are inspected and cleaned prior to installation to the system. Instruments are calibrated during testing, and automatic controls are tested for actuation at the proper setpoints. Alarm functions are checked for operability and limits during plant preoperational testing. Actuation of system components is tested periodically in accordance with plant technical specification requirements.

9.5.4.5 Instrumentation Application

Table 9.5-2 lists the measured parameters for monitoring the performance of the Diesel Generator Fuel Oil System.

Each fuel oil transfer pump has an AUTO/MANUAL selector switch located on the diesel generator local panel.

Each diesel oil transfer pump is controlled by the oil level in its corresponding day tanks. A high level signal in both day tanks stops the pump. A high or Hi-Hi level signal in one day tank closes its corresponding solenoid supply valve. A low level signal in either day tank opens its corresponding solenoid supply valve and starts the diesel oil transfer pump.

Storage tank oil level and day tank oil level alarms, designed to Class 1E requirements, are annunciated in the control room.

9.5.5 DIESEL GENERATOR COOLING WATER SYSTEM

9.5.5.1 Design Bases

Each Diesel Generator Cooling Water System is designed to:

a. cool the diesel generator set sufficiently to permit proper operation under all diesel loading conditions;

b. perform its function under the same environmental conditions as the diesel generator set which it serves (see Section 3.11);

c. function independently from its redundant cooling water system to assure that no single failure can prevent cooling of the redundant diesel generator set;

d. meet seismic Category I and Quality Group C requirements (owner optional upgrade, see Table 3.2-1).

e. as a minimum, the engine mounted piping as designed, fabricated, and installed by the engine manufacturer has been analyzed for design stresses and compared with the allowable stresses permitted by ANSI B31.1 Power Piping. The loads include mechanical, pressure, thermal and seismic forces. The results of the design study show adequate margins of safety when compared to the allowable stresses contained in ANSI B31.1.

9.5.5.2 System Description

Each of the two diesel engines in each diesel generator set has a self-contained cooling system which consists of a forced circulation cooling water system, to cool the engine directly, and an air- cooled radiator system, to remove the heat from the cooling water. Design data for the Diesel Generator Cooling Water System are given in Table 9.5-3. The system is shown on Figures 9.5-7 and 9.5-8.

A portion of the cooling water system supplies water to an aftercooler via an individual engine pipe manifold. The aftercoolers remove heat from the pressurized air leaving the turbocharger.

When running, the cooling water system is pressurized to approximately 30 to 45 psig. An expansion tank operates at slightly above atmospheric pressure (approximately four psig) and is connected to the suction side of the engine cooling water pumps.

Each cooling water pump and radiator fan is driven directly from its respective engine crankshaft. The Diesel Generator Cooling Water System requires no external source of power and does not depend on any external plant cooling system.

Makeup water for normal maintenance functions is furnished from a two inch, normally-isolated, expansion tank water filler line as shown on Figures 9.5-7 and 9.5-8. This helps ensure, along with the self-contained system design, that the components and piping are filled with water.

A three-way temperature-controlled valve controls the flow through the air-cooled radiator to maintain the required temperature (180°F).

During periods of diesel generator standby the engine preheat system maintains temperature above 85°F and the cooling water system between 125°F and 155°F.

The engine preheat system operates by means of convection. Two electric heaters are used per individual engine and are located at the lowest level in the system such that all heated water rises while the cooler water flows to the heaters directly or by crossflow. One heater is connected to the lube oil heat exchanger where heat is transferred to the lube oil to maintain the lube oil temperature at standby conditions and it also contributes heat to the water system.

The second heater is connected directly to the water system where by convection it heats the water into the piping and engine. The engine is heated by crossflow where heated water enters the engine block through the 1 1/4" equalizer connection at jacket water pump discharge. (See Figures 9.5-7 and 9.5-8). This equalizer connection goes downward from each pump connection and is connected together about 3 feet below the pump connection, so that the

heated water rises. The cooler water from the engine block returns to the heater by means of crossflow. The heaters are thermostatically controlled to maintain standby temperatures.

The two electric immersion heaters are provided for standby heating. The engine can thus be kept in constant readiness for an immediate start. The 15 kW, 480V, 3 phase ac heating units are mounted at the bottom of the accessory rack to heat the engine cooling water. The water circulates through the thermostatic switch which senses water temperature and controls the heating elements to keep the water in the oil cooler heat exchanger between 125°F and 155°F.

Power is provided to these immersion heaters from safety related MCC 2A7 for the A Diesel Generator and MCC 2B7 for the B Diesel Generator.

In the standby mode the lube oil is circulated by a continuously operating ac motor driven pump. As the oil is circulating through the lube oil cooler it picks up heat from the preheated jacket water. The standby oil and water temperatures are monitored and alarmed. Should a low temperature condition exist it is alarmed and the engine can be started and operated at idle speed.

Acceptable operation of the preheat system was assured by inspection of the PSL-1 diesel generators which are essentially duplicates of the PSL-2 units. While in the standby mode all local temperature indicators for the lube oil systems indicated temperatures in the range of 90°F to 125°F.

9.5.5.3 Safety Evaluation

Each Diesel Generator Cooling Water System is capable of providing sufficient capacity to cool the diesel generator set which it serves under postulated loading and ambient conditions.

Each Diesel Generator Cooling Water System is independent of any external power or cooling water source. Failure of either cooling system of one diesel generator set cannot affect the redundant diesel generator set. There are no connections between cooling systems of the redundant diesel generator sets.

The Diesel Generator Cooling Water System is protected from hurricane or tornado winds, external missiles, and/or flooding by virtue of its location within the Diesel Generator Building (see Section 3.3 for a discussion of wind and tornado loadings, and Section 3.4 for a discussion of water level (flood) design). The Diesel Generator Building is designed as a seismic Category I structure (see Section 3.8) and is situated above the probable maximum flood level. See Sections 3.5 and 3.6 for detailed discussions of internal and external missiles, and pipe whip and jet impingement.

The cooling water expansion tank is a 30 gallon tank for each engine. The tank holds 15 gallons of water which allows for 15 gallons expansion in the water system. Any leakage that may occur would be minimal. However, the diesel generator vendor postulates a leak of one (1) drop every two minutes for 200 hours. At this rate the system would lose less than 1/4 of a gallon after 200 hours. The jacket water system was tested with the expansion tank in the installed configuration proving that the NPSH was adequate for the cooling water pump.

Subsection 9.4.5 discusses the ambient temperature of the Diesel Generator Building under all conditions.

Corrosion of the cooling water system components is minimized by the use of demineralized water and a corrosion inhibiter in accordance with the engine manufacturer's recommendation. The makeup water system is not required for the operation of the diesel generator set.

Similar to the issues discussed in NRC Generic Letter 2008-01 and SER 2-05, the presence of unanticipated gas voids within the Diesel Generator Cooling Water System can challenge the ability of the system to perform its design functions due to issues such as gas binding, water hammer, injection delay times, etc. EDG subsystems present little to no opportunity for gas intrusion or air entrainment. Fill, vent, and surveillance operations procedures for the EDG subsystems assure acceptable system performance following maintenance or operational activities that could result in gas void formation. These procedures ensure that the subsystem is left in an operable condition on a monthly basis.

9.5.5.4 Tests and Inspections

The testing and inspection of the diesel generator sets is described in Subsection 8.3.1.

9.5.5.5 Instrument Application

The Diesel Generator Cooling Water System is monitored, alarmed or controlled by the following.

Temperature Indicators:

Engine Discharge	TI-59-004A, -008A, -012B, -016B
Engine In	TI-59-003A, -007A, -011B, -015B

Temperature Switches:

High Temperature Shutdown set 205°F
High Temperature Alarm 195°F
Immersion Heater Control set to maintain temperature between 125°F and 155°F
(TS-59-004A, -008A, -012B, -016B)

Pressure Switches:

Low water Pressure Alarm (23 psi)	PS-59-007A, -022A, -045B, -060B
Start Cut Off Back Up Switch (20 psi)	PS-59-008A, -023A, -046B, -061B

Level Switch:

Low Water Level Alarm	LS-59-002A, -004A, -016B, -023B

Water Level Sight Glass

Temperature indicators TI-59-003A, -004A, -007A, -008A, -011B, -012B, -015B and -016B, give local visual indication of the temperature of the cooling water at the engine in and discharge for each diesel generator sets.

The temperature switches TS-59-002A, -006A, -010B and -014B will shutdown the diesel generator when the cooling water temperature exceeds 205°F. During emergency operation

this shutdown is bypassed. Normal operating temperature for the cooling water is 185°F discharge from the engine.

The temperature switches TS-59-003A, -007A, -011B and -015B are provided to alarm on high cooling water temperature. This is annunciated locally at the EDG control panel as well as a trouble light. This is available at any time.

The immersion heater control switch is provided to control the standby immersion heater. The switch senses water temperature and controls the heating elements to keep water in the oil cooler heat exchanger between 125°F and 155°F.

Pressure Switches PS-59-007A, -022A, -045B and -060B are provided to alarm on low water pressure. This is alarmed locally on the EDG control panel as well as back at the control room as a trouble alarm.

The start cut off pressure switches are provided as a back up to protect the air start motors. The water pressure switches PS-59-008A, 023A, 046B and 061B are included only as a backup to the air start system to be sure that the air start motors disengage as the engines are accelerating.

The low water level alarm LS-59-002A, -004A, -016B and -023B are provided to annunciate low water level in the expansion tank. This alarm is provided locally in the EDG control panel as well as a trouble alarm in the control room.

Water level sight glass is provided for local visual check of the water level in the expansion tank.

When an alarm is indicated in the control room as an "Emergency Diesel Generator Local Alarm" it alerts the operator to diesel generator trouble. An operator then can be dispatched to the Diesel Generator Building, and by viewing the local annunciator panel, be alerted to the specific cooling system alarm. Then the locally mounted temperature gauge and sight glass on the engine cooling water system can be used to allow visual temperature monitoring to ascertain proper engine cooling water temperature or level.

Instrumentation is calibrated and tested periodically in accordance with plant technical specification requirements.

In the event of SIAS or loss of offsite power, the diesel generator is not shut down on high engine water temperature. Subsection 8.3.1 discusses diesel generator lockout signals.

9.5.6 DIESEL GENERATOR AIR STARTING SYSTEM

9.5.6.1 Design Bases

Each Diesel Generator Air Starting System is designed to:

a. store and provide sufficient charging air to ensure starting of its associated diesel generator set;

b. withstand safe shutdown earthquake loads without loss of function;

c. perform its function under the same environmental conditions as the diesel generator set which it serves (see Section 3.11);

d. ensure starting of its associated diesel generator set;

e. meet seismic Category I, and Quality Group C requirements (owner optional upgrade, see Table 3.2-1);

f. as a minimum, the engine mounted piping as designed, fabricated, and installed by the engine manufacturer has been analysed for design stresses and compared with the allowable stresses permitted by ANSI B31.1 Power Piping. The loads include mechanical, pressure, thermal and seismic forces. The results of the design study shows adequate margins of safety when compared to the allowable stresses contained in ANSI B31.1.

9.5.6.2 System Description

Each of the diesel generator sets has an independent air starting package, 2A and 2B. The 2A air start package serves the 2A1 (16 cylinder) and 2A2 (12 cylinder) engines while the 2B air start package serves the 2B1 and 2B2 engines. Each air start package is divided into two subsystems, with each subsystem consisting of two air receivers, four air start motors and associated piping and components. Each subsystem is normally aligned to four air start motors (two motors on the 16 cylinder engine and two motors on the 12 cylinder engine). This allows either subsystem (or any 4 of 8 air start motors) to start both of the tandem engines. Starting system design data are given in Table 9.5-4. The system is shown on Figures 9.5-7 and 9.5-8.

The air start system when energized engages the engine air start motors, the pressure switches, the air solenoid, manual, check and relief valves, the piping and connectors.

There are four starting air tanks installed in redundant pairs. Each pair is connected to its air compressors assembly. Each air tank has a pressure switch to alarm low tank pressure.

When a start signal is initiated, the air start solenoid valve is energized and air is admitted from the air tanks to the engaging mechanism of the air start motors. Air also is admitted to the Governor Boost device which pressurizes the Woodward Governor oil system.

When a start signal is given, all start solenoid air valves (SV) will be energized simultaneously and all eight starting motor gears will engage the flywheel and crank the engine to start. The air supply is cut off at approximately 100 RPM. The control system will prevent any re-engagement of the starter motor pinions at speeds above 50 RPM.

Each diesel generator set is also provided with an electric motor driven air compressor. The electric motor driven air compressor motor is rated 7 1/2 HP, 460V, 3 phase and is powered from safety-related MCC 2A7, 2B7 for the redundant diesel generator sets.

A pressure switch is connected to the air header and also the loadless start device to control the compressor. The loadless start device keeps the compressor unloaded to reduce the starting load on the electric motor until the motor has accelerated to approximately rated speed. The pressure switch starts the electric motor driven compressor at 150 psi and stops it at 200 psi. A relief valve is provided on all the air storage tanks to protect these tanks.

If needed, any tank or air compressor may be isolated for servicing and not jeopardize the operation of the DG.

9.5.6.3 System Evaluation

Each Diesel Generator Air Starting System is capable of starting its respective diesel generator set if either one of its two air start motor sets function. The compressor assures that the four starting air receivers are fully charged at all times. For maintenance convenience, a connection is provided to pressurize the start-up air tanks with an alternative pressure source.

Any single failure of the starting air system for a diesel generator set can only affect the diesel generator set which it serves. There are no interconnections between starting air systems of redundant diesel generator sets. The Staff in its Safety Evaluation Report of October 1981 states at Section 9.5.6 the following:

“Redundancy in the starting system is provided by two diesel generators so that a malfunction or failure in one system does not impair the ability of the other system to start its diesel engine. This meets the requirements of General Design Criterion 17, “Electric Power Systems.”

The starting operations are automatic and self-initiated. The engine takes approximately two seconds cranking time to start, with the maximum cranking duration set at nine seconds. If the diesel generator fails to start after nine seconds a timing relay automatically stops the starting motors. A "Fail to Start" alarm is sent and the emergency shutdown relay is tripped. This leaves five seconds worth of air in the air receivers for a second try at starting the diesel generator. To try to start the diesel generator again the emergency shutdown relay must be reset and a start signal must be present.

Each pair of air receivers are sized for five starts. Each start takes approximately 2 seconds of cranking time. The system is designed to start the EDG in such a time that the diesel generator can reach rated speed and voltage within the specified time (maximum of 10 seconds).

The air starting system is protected from hurricane or tornado winds, external missiles or flooding by virtue of its location inside the Diesel Generator Building. The Diesel Generator Building is designed as a seismic Category I structure and is located above the Probable Maximum Flood level. See Section 3.3 for a discussion of wind and tornado loadings and Section 3.4 for a discussion of water level (flood) design. See Sections 3.5 and 3.6 for discussions on internal and external missiles, pipewhip, and jet impingement. Seismic design of structures is discussed in Section 3.8. The system components are designed to operate in the ambient temperature of the Diesel Generator Building (see Subsection 9.4.5).

The air starting system (receivers, valves, etc.) and piping are stainless steel to minimize corrosion and contamination of starting air. Each air receiver receives air from the air compressor via an air aftercooler, dryer and filters which provide dry, clean air for the air start system.

The EDG air start system is self contained and does not come into contact with the other EDG fluid subsystems. This system presents little to no opportunity to present gas intrusion or air entrainment issues similar to GL 2008-01 or INPO SER 2-05.

9.5.6.4 Testing and Inspection

The testing and inspection of the diesel generator sets is discussed in Subsection 8.3.1.

9.5.6.5 Instrumentation Application

Pressure switches are provided on each tank to alarm low air pressure. In addition, a pressure gauge is provided on each tank for local indication. If a low air pressure alarm is received, a locally troubled alarm is sounded in the control room and an operator will be dispatched to the DG Building.

9.5.7 DIESEL GENERATOR LUBRICATING SYSTEM

9.5.7.1 Design Bases

Each Diesel Generator Lubrication System is designed to:

a. supply sufficient lubrication to permit proper operation of its associated diesel generator set during diesel generator operation and shutdown;

b. perform under the same environmental conditions as the diesel generator set which it serves (see Section 3.11);

c. function independently from its redundant diesel generator lubrication system to assure that no single failure can prevent lubrication of the redundant diesel generator set.

d. meet seismic Category I, and Quality Group C requirements (owner optional upgrade, see Table 3.2-1);

e. as a minimum, the engine mounted piping as designed, fabricated, and installed by the engine manufacturer has been analyzed for design stresses and compared with the allowable stresses permitted by ANSI B31.1 Power Piping. The loads include mechanical, pressure, thermal and seismic forces. The results of the design study shows adequate margins of safety when compared to the allowable stresses contained in ANSI B31.1.

9.5.7.2 System Description

Each diesel engine of each diesel generator set has its own Diesel Generator Lubricating System. System design data are given in Table 9.5-5. The system is shown on Figures 9.5-7 and 9.5-8.

The present St. Lucie Unit No. 2 design utilizes two Emergency Diesel Generators each consisting of a twelve (12) cylinder and a sixteen (16) cylinder engine and their associated turbocharger systems. Each of the four (4) engines incorporates a self-contained lube oil system consisting of a lube oil sump located at the base of the engine, an engine driven lube oil pressure pump, scavenger pump, piston cooling pump, motor-driven soak back pumps, a filter, strainer, heat exchanger and associated piping. The lube oil heat exchanger is served by the Diesel Generator Cooling Water System.

The engine lubricating oil system is comprised of three separate systems. These are the piston cooling system, the scavenging oil system and the main lubricating system. Each having its own oil pump and all being driven from the accessory gear train at the front of the engine.

In the diesel generator operating mode, engine lubrication is provided by both the engine-driven lube oil pressure pump and the piston cooling pump. These individual pumps are of the positive displacement gear type and are both contained in one housing and driven from a common drive shaft. The lube oil pressure pump takes suction from the lube oil strainer and supplies oil to lubricate the engine bearings, turbocharger bearings, and the upper oil gallery.

The piston cooling and lube oil pressure pumps take oil from a common suction and delivers oil to the two piston cooling oil manifolds (one on each side of the engine) extending the length of the engine.

The purification and cooling function of the lube oil is performed by the engine driven scavenger oil pump. This pump is a positive displacement helical gear type pump, which draws oil out of the engine oil pan sump through the scavenger strainer and pumps oil through the main lube oil filter, lube oil cooler and then discharge into the main lube oil strainer housing located at the front of the engine. The Lube Oil Cooler Unit is designed to maintain the oil at a normal operating temperature of 190°F. An indication of low temperature is provided by TS-59-001A, 005A, 009B & 013B which actuates an alarm at 85°F, thereby preventing damage to the diesel generator and its associated lube oil system components. A bypass relief valve, set 40 psid, is provided around the lube oil filter for insuring adequate lube oil to the engine and preventing excessive oil pump outlet pressure when the filter element is clogged.

In the standby mode, lube oil is drawn from the engine sump by continuously operating ac motor driven pumps. There are two independent flow paths provided for lubricating the diesel. One of the flow paths is provided by a Turbo Lube Oil pump, and the other by a soakback pump. Lube oil is discharged from the Turbo pumps through the auxiliary lube oil filter to an engine connection that supplies oil to the turbocharger bearings. (Note that when the engine is running, the engine system supplies oil for the turbocharger and the motor driven pump is not required). This insures that the turbocharger bearings are lubricated and ready for a fast start. Excess flow is diverted into the soakback pump discharge.

The soakback pumps provide lube oil through a 30 psi check valve to the engine lube oil filter, the lube oil cooler, and the lube oil strainer. The oil then overflows to an internal dam and returns to the engine sump. This circuit preheats the lube oil and maintains oil in the piping and accessories.

The four (4) inch main header has a loop seal to minimize the possibility of draining the lube oil filter and cooler units. This main header will also incorporate a flow path to maintain a low pressure flow lube oil to the engine oil gallery (engine bearings) during the standby mode of operation. Sight flow glasses have been added to provide visual verification of the oil level. The main header contains a vacuum breaker for the protection of the accessory equipment loop. This will minimize the probability of siphoning the oil in the accessory equipment back into the engine sump.

A redundant 125V DC motor driven lube oil pump is provided in parallel for each AC motor driven pump. The DC pumps are of sufficient capacity to furnish lube oil to the turbocharger and to preheat the circuit. If a low pressure condition exists on the normally running AC driven lube oil pumps, the control logic will automatically start the standby DC pump. The DC pump will remain running until the discharge pressure of the AC pump has been restored.

The AC power supplies for DG 2A Turbo Lube Oil AC Pump 2A1 and 2A2 are from MCC 2A7 and DG 2B Turbo Lube Oil AC Pump 2B1 and 2B2 are from MCC 2B7. DC power supplies for

DG 2A Turbo Lube DC Pump 2A1 and 2A2 are from DC Bus 2A via DG 2A control panel, and DG 2B Turbo Lube Oil DC Pump 2B1 and 2B2 are from DC Bus 2B via DG 2B control panel. Full voltage local starters are utilized for the AC pumps and reduced voltage (step) local starters are used for the DC pumps. The reduced voltage starters are necessary to limit inrush current to the DC motors to a level that will not damage the motors' windings.

The turbo DC pump motors are normally de-energized and have been wired up with Class 1E space heaters which prevent any condensation buildup which could cause a short circuit failure of the motor. The AC pump motors have also been provided with Class 1E space heaters. However, since these motors are constantly operating, enough heat is generated to prevent any condensation buildup. Therefore, these spare heaters are not utilized.

In the operating mode, lube oil is drawn from the strainer by the engine mounted pressure pump which supplies oil to lubricate the engine bearings, engine bearings, turbo bearings and the top deck. The piston cooling pump delivers oil to the piston cooling header where oil jets up into the piston thereby cooling the pistons.

During operation, the oil pressure is monitored by pressure switches which provide alarm and shutdown capabilities. Low oil pressure conditions will alarm prior to engine shutdown.

In the event of SIAS or loss of offsite power, the diesel generator is not shut down on low engine oil pressure. Subsection 8.3.1.1.2(k) discusses diesel generator lockout signals.

Procedures have been written regarding the addition of lube oil, including the location to add the oil, conditions under which oil is added, and the proper type of oil to add. As an added assurance that no deleterious material is present in the engine lubrication system, monthly samples of diesel lube oil are analyzed for content.

Line mounted pressure switches are provided to alarm low pressure conditions locally and in the common trouble alarm in the main control room. Additionally, locally mounted pressure gauges are provided to measure actual oil pressure in the various lines. The standby oil and water temperatures are monitored and alarmed. Should a low temperature condition exist, it will be alarmed and the engine can be started and operated at idle speed to maintain minimum temperature.

9.5.7.3 System Evaluation

The Diesel Generator Lubricating System is capable of providing sufficient lubrication for the diesel generators under all loading conditions.

During diesel generator operation, the lubricating system is independent of any source of external power or external cooling water. Failure of the lube oil system on one diesel generator set cannot affect the redundant diesel generator set.

As each lube oil system associated with its diesel generator set is located in its own room with no interconnecting piping, a postulated missile generated by one diesel generator will not damage the lube oil system associated with the other diesel generator set.

Components are designed to Quality Group C requirements. The lube oil system is protected from hurricane or tornado winds, external missiles and flooding by virtue of its location inside the Diesel Generator Building. The Diesel Generator Building is designed as a seismic Category I

structure, and is located above the PMF level. See Section 3.3 for a discussion of wind and tornado loadings, and Section 3.4 for a discussion of water level (flood) design. Seismic design of structures is discussed in Section 3.8. See Sections 3.5 and 3.6 for discussions on internal and external missiles, and pipe whip and jet impingement.

The components of this system are designed to operate under the most severe conditions of temperature and pressure expected during operation of the diesel generator. Ambient temperature of the Diesel Generator Building for various conditions is discussed in Subsection 9.4.5.

Similar to the issues discussed in NRC Generic Letter 2008-01 and SER 2-05, the presence of unanticipated gas voids within the Diesel Generator Lubricating System can challenge the ability of the system to perform its design functions due to issues such as gas binding, water hammer, injection delay times, etc. Evaluation EDG subsystems present little to no opportunity for gas intrusion or air entrainment. Fill, vent, and surveillance operations procedures for the EDG subsystems assure acceptable system performance following maintenance or operational activities that could result in gas void formation. These procedures ensure that the subsystem is left in an operable condition on a monthly basis.

9.5.7.4 Testing and Inspection

The testing and inspection of the diesel generator sets are described in Subsection 8.3.1.

9.5.7.5 Instrumentation Application

The following temperatures and pressures are monitored and/or alarmed.

a) Temperature Indicators

Lube Oil into Cooler (at filter)	TI-59-001A, -005A, -009B, -013B
Lube Oil out of Cooler	TI-59-002A, -006A, -010B, -014B

These are local temperature gauges used to locally read actual temperatures of the lube oil.

b) Temperature Switches

Low Lube Oil Temperature (85°F) TS-59-001A, -005A, -009B, -013B

This temperature switch alarms low lube oil temperature locally and a diesel trouble alarm in the control room.

c) Pressure Indicators

Lube Oil Pressure Gauge	PI-59-001A, -005A, -013B, -017B
Lube Oil into Filter Pressure Gauge	PI-59-002A, -006A, -014B, -018B
Lube Oil out of Filter Pressure Gauge	PI-59-003A, -007A, -015B, -019B

These are locally mounted pressure gauges to measure actual oil pressure.

d) Pressure Switches

Low Idle Pressure Alarm (25 psi)	PS-59-001A, -016A, -039B, -054B
Low Engine Oil Pressure Alarm (40 psi)	PS-59-002A, -017A, -040B, -055B
Low Engine Oil Pressure Shutdown (20 psi)	PS-59-003A, -018A, -041B, -056B
High Crankcase Pressure Alarm (1" H_2O)	PS-59-004A, -019A, -042B, -057B
Low Standby Pressure Alarm (10 psi)	PS-59-005A, -020A, -043B, -058B
Low Lube Oil Pump Pressure (10 psi)	PS-59-006A, -021A, -044B, -059B

Pressure Indicating Switches

Diesel 2A1 Turbo L.O. Filter Low Pressure (PI function)	PIS-59-001A
Diesel 2A2 Turbo L.O. Filter Low Pressure (PI function)	PIS-59-006A
Diesel 2B1 Turbo L.O. Filter Low Pressure (PI function)	PIS-59-011B
Diesel 2B2 Turbo L.O. Filter Low Pressure (PI function)	PIS-59-016B
Diesel 2A1 Soak Pump L.O. Low/High Pressure Alarm (20 Psi falling, 162 Psi rising)	PIS-59-002A
Diesel 2A2 Soak Pump L.O. Low/High Pressure Alarm (20 Psi falling, 162 Psi rising)	PIS-59-007A
Diesel 2B1 Soak Pump L.O. Low/High Pressure Alarm (20 Psi falling, 162 Psi rising)	PIS-59-012B
Diesel 2B2 Soak Pump L.O. Low/High Pressure Alarm (20 Psi falling, 162 Psi rising)	PIS-59-017B
Diesel 2A1 AC Turbo L.O. Pump Low Pressure Alarm (18 Psi falling)	PIS-59-004A
Diesel 2A2 AC Turbo L.O. Pump Low Pressure Alarm (18 Psi falling)	PIS-59-009A
Diesel 2B1 AC Turbo L.O. Pump Low Pressure Alarm (18 Psi falling)	PIS-59-014B
Diesel 2B2 AC Turbo L.O. Pump Low Pressure Alarm (18 Psi falling)	PIS-59-019B

These pressure switches and pressure indicating switches alarm low lube oil pressure, shutdown the diesel generator on low lube oil pressure when diesel is in a non-emergency situation (testing) and one will alarm high crankcase pressure. All the alarms are shown locally and a common trouble alarm is sent back to the control room.

e) Level Switches

Low Lube Oil Sump Level Alarm LS-59-001A, -003A, -015B, -022B

The level switch alarms on low oil level in the sump.

If a trouble alarm is received in the control room, an operator will be sent to the EDG Local Control Panel to investigate the problem. Depending on the situation (testing or emergency operation), appropriate action will be taken by the operator.

Instrumentation is calibrated and tested periodically in accordance with plant technical specification requirements.

9.5.8 DIESEL GENERATOR COMBUSTION AIR INTAKE AND EXHAUST SYSTEM

9.5.8.1 Design Bases

The Diesel Generator Combustion Air Intake and Exhaust System is designed to:

a. supply adequate combustion air to the diesel generators and to exhaust the combustion products to the atmosphere;

b. prevent water that could adversely affect diesel generator operation from reaching the engine air intakes;

c. withstand safe shutdown earthquake loadings;

d. withstand tornado loadings, including high winds and missiles;

e. function independently from its redundant diesel generator set air intake and exhaust system to assure that no single failure can prevent operation of the redundant diesel generator set.

For seismic and safety class classifications, refer to Table 3.2-1.

9.5.8.2 System Description

The diesel generator combustion air intakes and exhausts are shown on Figures 9.5-11 and 12, and additional information is provided in Subsection 8.3.1.

The diesel generators consume intake air from the surrounding ambient air inside the Diesel Generator Building. See Subsection 9.4.5 for discussion of Diesel Generator Building ambient air conditions. Intake air entering the Diesel Generator Building between Elevations 19 to 22.9 feet is turned upward and screened prior to entering the diesel generator room by virtue of the building's design, thus precluding the entrance of missiles and precipitation that could adversely affect diesel generator operation.

Each diesel generator set has a dry-type intake filter/silencer and a short flexible connector from the air filter to the turbocharger. The exhaust air system for each engine of the diesel generator set consists of an exhaust silencer and ducting. Exhaust bellows connect the engine housing to the exhaust system. The exhaust ducting exits to the roof and is sized to avoid excessive backpressure.

9.5.8.3 System Evaluation

The diesel generators consume intake air from the surrounding ambient air in the Diesel Generator Building. Intake air entering the Diesel Generator Building between elevation 19 and 22.9 feet is turned upward and screened prior to entering the diesel generator room by virtue of the building design, thus precluding the entrance of missiles and precipitation that could adversely affect diesel generator operation. Thus the diesel generator combustion air intakes are protected from tornado generated missiles and shielded from direct wind or rain. Air intake filters are also provided on the engine to remove particulate.

The diesel generator exhaust air system for each engine of the diesel generator set consists of an exhaust silencer and ducting. Exhaust bellows connect the engine housing to the exhaust

system. The exhaust ducting exits to the roof and is sized to avoid excessive back pressure. The roof exhausts are protected from tornado winds and external missiles, as well is precipitation, by barrier hoods.

The Diesel Generator Building is designed as a seismic Category I structure (see Section 3.8) and is located above the PMF level. See Section 3.3 for a discussion of wind and tornado loadings, and Section 3.4 for a discussion of water level (flood) design. See Sections 3.5 and 3.6 for discussion on internal and external missiles, pipe whip and jet impingement.

The diesel generators and their accessories are located inside the Diesel Generator Building. To keep the amount of concrete dust down, the floors, and ceiling on the inside of the Diesel Generator Building are painted or coated. The combustion air intake contains a filter to filter out any dust or other deleterious material.

The relays, control switches and other electrical components are located inside a NEMA 12 free standing cabinet. This assures that excessive dust will not settle on these components.

In addition the Diesel Generator is periodically tested and inspected to assure its availability.

The pressure drop due to a tornado has been taken into consideration in the design of the diesel generator air intake and exhaust flow.

The diesel generators and related systems are designed and fabricated utilizing non-combustible and fire resistant materials to the maximum extent practical. Each DG is provided with its own air intake and exhaust system, thereby assuring that a fire in one part of the building does not degrade the quality of the diesel combustion air in the other part. The Diesel Generator Building is divided into two fire areas. Fire hazards and ignition sources in the Diesel Generator Building have been analyzed. See the Fire Design Basis Document (Reference 7) for additional information. EC282743

Diesel generator air intakes are provided on opposite sides of the Diesel Generator Building which prevent smoke and hot gases from a fire in the diesel generator room from affecting the redundant unit.

The engine exhaust plenum is designed such that there is sufficient backpressure for the engine to operate at rated capacity upon total loss of the bellows assembly and exhaust ducting.

Any single failure of the combustion air intake or exhaust system for a diesel generator set can only affect the diesel generator set which it serves.

Bulk gas storage is located over 700 feet northwest of the Diesel Generator Building with the St. Lucie Unit I Reactor Auxiliary Building and Unit 2 Shield Building positioned between. An accidental gaseous release does not affect the operation of the Unit 2 diesel generators. Four 15 lb CO_2 fire extinguishers are located in each diesel generator compartment. A failure of one of these bottles does not displace enough oxygen to impact both diesel generators.

The diesel generator exhaust lines penetrate the top of the Diesel Generator Building while the air intakes are positioned in the walls. The rising, hot exhaust gases do not affect the air intake.

Intake filters are provided on the diesel generator air intake lines to entrap particulates before entering the diesel engine.

9.5.8.4 Inspection and Testing Requirements

Preoperational and periodic test and inspections of system functions are performed in accordance with plant operating procedures. The regular testing of the diesel generators themselves proves the integrity of the intake and exhaust systems.

9.5.8.5 Instrument Application

The diesel generator exhaust gas is monitored by means of a pyrometer. The pyrometer is locally mounted on the diesel generator and allows each engine cylinder temperature as well as the engine turbocharger temperature to be monitored.

By comparing the readings between the two engines, information on load sharing and overall engine conditions is quickly available. A normal reading will be readings from each engine that are fairly close together (within 200F of each other). If the readings are farther than this apart, it indicates that one engine (the engine with the higher reading) will be more heavily loaded than the other engine, and the governors will have to be adjusted to equalize the load between the engines. However, if one reading is very low, it indicates that the affected engine has failed or has several cylinders that are not firing.

An exhaust temperature differential alarm is provided in the control room as a trouble alarm.

If an alarm is given an operator can be dispatched to the DG building to ascertain the problem using the locally mounted pyrometer. After the operator has determined the problem, the operator will take appropriate action, depending on the situation (testing or emergency operation). No instrumentation/alarms are provided to directly monitor the intake air. Any problems with the intake air system that would affect diesel engine operation could be detected by other means (i.e., exhaust temperature differential).

EC282743

REFERENCES

1. Safety Evaluation by the Office of Nuclear Reactor Regulation for St. Lucie Plant, Unit Nos. 1 and 2 - Issuance of Amendments Regarding Transition to a Risk-Informed, Performance-Based Fire Protection Program in Accordance with Title 10 of the Code of Federal Regulations Section 50.48(c), dated March 31, 2016 (ML15344A346).

2. License Amendment Request, Transition to 10 CFR 50.48(c) - NFPA 805 Performance-Based Standard for Fire Protection for Light Water Reactor Electric Generating Plants, 2001 Edition, dated March 22, 2013.

3. National Fire Protection Association Standards, NFPA 805, Performance-Based Standard for Fire Protection for Light Water Reactor Electric Generating Plants, 2001 Edition.

4. Regulatory Guide 1.205, Risk-Informed, Performance-Based Fire Protection for Existing Light-Water Nuclear Power Plants, Revision 1, dated December 2009.

5. NEI 04-02, Guidance for Implementing a Risk-Informed, Performance-Based Fire Protection Program under 10 CFR 50.48(c), Revision 2, dated April 2008.

6. FAQ 12-0062, Updated Final Safety Analysis Report (UFSAR) Standard Level of Detail, Revision 1, dated May 21, 2012.

7. DBD-FP-1, Fire Protection Design Basis Document.

8. 1800022, Fire Protection Plan.

9. 2998-B-048, Unit 2 Nuclear Safety Capability Assessment (NSCA).

10. 2998-B-049, Unit 2 Essential Equipment List.

11. PSL-ENG-SEMS-98-067, St. Lucie Unit 2 Nuclear Safety Capability Assessment Basis Document.

12. St. Lucie Plant Units 1 & 2 EDISON Cable and Raceway Database.

TABLE 9.5-1

DESIGN DATA FOR DIESEL GENERATOR FUEL OIL SYSTEM

1. Piping

Material	Carbon Steel, A106 GR B
Design pressure, psig	
Suction	50
Discharge	100
Design temperature, °F	
Suction	120
Discharge	120
Pipe schedule	Schedule 40 or Schedule 80
Connections	
2-1/2 in. and larger	Butt weld, flanged or Victaulic
2 in. and smaller	Socket weld or flanged or threaded
Valves	
2-1/2 in. and larger	Butt weld and/or flanged
2 in. and smaller	Socket welded
Codes	ANSI B31.1
	ASME Section III, Class 3 (1971 edition, Summer 1973 addenda)
Seismic design	
Tank overflow, fill and venting	Non-Category I
Balance of fuel oil piping	Category I

2. Diesel Oil Transfer Pump

Type	Horizontal, centrifugal, single stage
Number	2
Capacity, gpm	25
Discharge pressure, psig	30
Material	
Casing	SA351 GR CF8M
Impeller	A296 GR CF8M
Shaft	A276 Type 316
Motor	3 hp, 460V, 3 phase, 60 Hz 1750 rpm with 1.15 service factor
Code	ASME Section III, Class 3 (1974 edition, Winter 1974 addenda)
Seismic design	Category I

EC283221

Table 9.5-1 (Continued)

3. Diesel Oil Storage Tanks

Quantity per diesel generator set	1
Usable capacity, gal (maximum volume at non seismic fill nozzle)	≈ 43400
Usable capacity, gal (at fill level)	≈ 43,872
Gross capacity, gal (available at fill level)	44,752 (includes NNS volume of ≈1,005 gal)
Gross capacity, gal (overflow polars)	45,004
Material	Carbon steel
Design pressure	Atmospheric
Design temperature, °F	125
Code	ASME Section III, Class 3 (1977 edition)
Seismic design	Category I

4. Day Tanks

Quantity per diesel generator set	2
Usable capacity, gal maximum, at Diesel Oil Transfer Pump Level switch stop setting	≈ 300
Gross capacity, gal	333.5
Material	1/4" carbon steel ASTM A-SA-285 GRC SA-515-70
Design pressure	Atmospheric
Design temperature, °F	150
Code	ASME Section III, Class 3
Seismic design	Category I

5. Engine-Driven and Motor-Driven Diesel Fuel Oil Pump

Type	Positive Displacement
Quantity	4
Capacity, gpm	4.5
Discharge Press, psig	50
Motor hp	0.5 hp

TABLE 9.5-2

DIESEL GENERATOR FUEL OIL SYSTEM INSTRUMENTATION APPLICATION

System Parameter & Location	Indication: Control Local Room	Alarm(1): Control Room	Alarm(1): Control Room Recording	Tag Number/or Control Function	Instrument[4] Range	Operating Range	Instrument[4] Accuracy
Diesel Oil Storage Tank Level	*	Low[1][3]		LIS-17-9A,-9B		Full-4ft	
				LS-17-10A,-10B		Full-4ft	
Diesel Oil Transfer Pump Pressure	*			PI-17-5,-6		40 psig	
Day Tank Level	*			2-LI-59-001A,-002A 2-LI-59-003B,-004B		Full	
		LL[3]		2-LS-59-006A,-018B			
				2-LS-59-010A,-024B			
		HH[3]		2-LS-59-005A,-017B,-011A, -025B Hi-Hi level closes corresponding Tank Inlet Valve			
		LL[l]		2-LS-59-009A,-021B,-014A,-028B			
				2-LS-59-007A,-019B,-013A,-027B (Low Level starts pump & opens Tank Inlet Valve)			
				2-LS-59-008A,-020B,-012A,-026B (High level closes inlet valves and stops pump)[2]			
Diesel Oil Storage Tank Truck Fill Line Temperature	*			TI-17-3A, -3B TI-17-2A, -2B			

(1) Safety grade alarms in control room.
(2) This stop can be overridden by switching to manual mode.
(3) Safety grade local alarm. Common alarm is also annunciated in the control room.
(4) Instrument ranges are selected in accordance with standard engineering practices. Instrument accuracies are selected such that existing instrument loop performance and safety analysis assumptions remain valid. Where applicable, instrument accuracies are also evaluated for their impact on setpoints in accordance with the FPL Setpoint Methodology.

TABLE 9.5-3

DESIGN DATA FOR DIESEL ENGINE COOLING WATER SYSTEM COMPONENTS

1. Radiator	12 cylinder engine	16 cylinder engine
Type	Straight Fin Tube	Straight Fin Tube
Quantity per engine	1	1
Design duty, 10^6 BTU/hr	5.3	7.1
Heat transfer area, ft^2	880	1151
Design pressure, psig	100	100
Design temperature, F	350	350
Air flow, acfm	67,491	90,000
Air Density	.939	.939
Material		
Tubes	Admiralty	Admiralty
Fins	Aluminum	Aluminum
Seismic Design	Category I	Category I
Code	ASME Section VIII, 1974 Edition, Summer 1975 Addenda	ASME Section VIII, 1974 Edition, Summer 1975 Addenda
2. Expansion Tank		
Quantity per diesel engine	1	
Dimensions, diameter/ length, in.	12/60	
Design pressure, psig	15	
Design Temp, F	220	
Material	ASTM SA-106-B Shell SA-285-C Heads	

TABLE 9.5-3 (Cont'd)

2. Expansion Tank (Cont'd)	
Seismic design	Category I
Code	ASME Section III, Class 3 1974 Edition, Summer 1975 Addenda
3. Piping, Fittings and Valves	
Material	
4 in. and 6 in. piping	ASTM A-106 Grade B, seamless
Design pressure, psig	70
Design Temperature, °F	205
Code	ASME Section III, Class 3, 1974 Edition, Summer 1975 Addenda

TABLE 9.5-4

DESIGN DATA DIESEL GENERATOR STARTING SYSTEM COMPONENTS

1.	Compressor	
	Type	Air cooled, reciprocating piston
	Quantity per set	1
	Discharge pressure, psig	200
2.	Compressor Driver	
	Motor, hp	7 1/2
3.	Air receivers	
	Quantity per set	4
	Design pressure, psig	250
	Design temperature, °F	200
	Volume, ft^3	36
	Material	Stainless Steel SA 240 TP 304*
	Code	ASME Section III, Class 3 1974 edition, Summer 1975 Addenda
	*Top Heads replaced with Non-Appendix B material	
4.	Piping, Fittings and Valves	
	Piping material	Stainless Steel SA 312 GR 304
	Fittings Material	Stainless Steel SA 182F GR 304
	Design pressure, psig	250
	Design temp, °F	200
	Code	ASME Section III, Class 3 1974 Edition, Summer 1975 Addenda

TABLE 9.5-5

DESIGN DATA FOR DIESEL GENERATOR LUBE OIL SYSTEM COMPONENTS

Piping, Fittings and Valves		
Piping material	ASTM-A-106 GR B	
Fittings	ASTM A-105 ASTM A-234	
Design pressure, psig	150	
Design temperature, F	300	
Code	ASME Section III, Class 3, 1974 Edition, Summer 1975 Addenda	
SOAK Back Lube Oil Pump		
Motor Characteristics 460V AC, 3 Phase, 60 Hz 1 hp, 1150 rpm		
	Engine	
	12 cylinder	16 cylinder
Pump Capacity (nominal)	6 gpm	6 gpm
Discharge Head	50 psig	50 psig
DC Driven Aux Soak Back Pump		
Motor Characteristics 125V DC 1/2 hp, 1800 rpm		
Pump Capacity	6 gpm	6 gpm
Discharge Head	50 psig,	50 psig
Lube Oil Scavenging Pump		
Pump Capacity	279 gpm	390 gpm
Discharge Head	25 psig (Hot) 60 psig (Cold)	25 psig (Hot) 60 psig (Cold)
Piston Cooling Pump		
Pump Capacity	66 gpm	92 gpm

TABLE 9.5-5 (Cont'd)

	Engine	
	12 Cylinder	16 Cylinder
Lube Oil Pressure Pump		
Pump Capacity	157 gpm	185 gpm
Discharge Head	125 psig	125 psig
AC Turbo Lube Oil Pump		
Motor characteristics 460V AC, 3 Phase, 60 Hz 2 hp, 1200 rpm		
Pump Capacity (min)	6.5 gal	6.5 gal
Discharge Head	80 psig	80 psig
DC Turbo Lube Oil Pump		
Motor characteristics 125V dc 2 hp, 1150 rpm		
Pump Capacity	6.5 gpm	6.5 gpm
Discharge head	80 psig	80 psig

TABLE 9.5-6
SUMMARY OF ONSITE COMMUNICATION SYSTEMS CAPABILITIES AND NOISE CONSIDERATION DURING TRANSIENTS AND/OR ACCIDENTS

STATION	MAXIMUM ANTICIPATED SOUND LEVEL dBA	COMMUNICATION SYSTEMS AVAILABLE AND MAXIMUM BACKGROUND NOISE FOR EFFECTIVE COMMUNICATION			
		PBX TEL dBA	PAGE/PARTY, dba PAGING	PARTY LINE STA	SOUND POWERED HEADSET dBA
Main Control Room	75	80(1)	80	95(2)	-
Hot Shutdown Room	70	80(1)	80	95(2)	96(6)
Shutdown Cooling System Area	90	95(2,5)	100(4)	95(2,5)	95(6)
Low Pressure & High Pressure Safety Injection Pump Areas	95	95(2,5)	103(4)	95(2,5)	95(6)
Containment Spray Pump Area	95	95	103(4)	95(2)	95(6)
Boric Acid Tank & Pump Area	90	95	95(4)	95(2)	95(6)
Auxiliary Feedwater Pump Area	95	95(2)	103(4)	95(2)	95(6)
Component Cooling Water Pump Area	95	95(2)	100(4)	95(2,5)	95(6)
Intake Cooling Water Pump Area	95	-	105(4)	95(2)	95(6)
Diesel Generator	115	120(3)	115(4)	115(3)	120(7)
Essential Switchgear Rooms					
Turbine Bldg. El. 19.5'	80	95(2)	98(4)	95(2)	95(6)
Reactor Aux. Bldg. El. 19.5' & 43'	75	95(2)	100(4)	95(2)	95(6)

Notes

1 - Standard type communications equipment
2 - Handsets equipped with noise cancelling microphones
3 - Soundproof booth or acoustical shield and noise cancelling microphones
4 - Paging loudspeakers are spaced closer together. During emergency conditions, paging amplifiers are remotely controlled to provide full audio power, overriding the volume controls.
5 - Additional communications equipment is located outside the actual room, where noise levels are approximately 20 dB lower.
6 - Boom microphone with ear-muff type headset
7 - Noise shielded microphone with ear-muff type headset

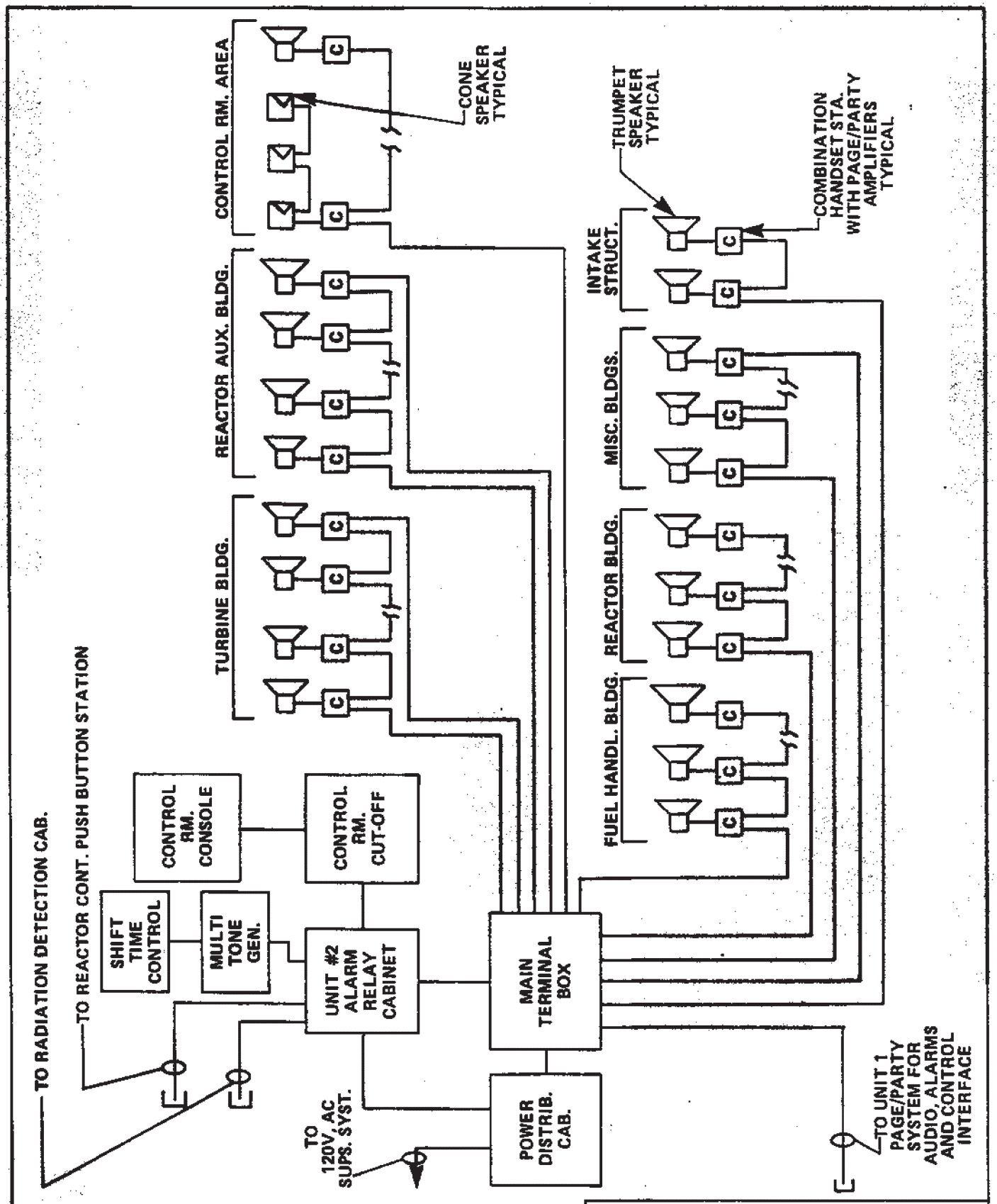

FLORIDA POWER & LIGHT COMPANY
ST. LUCIE PLANT UNIT 2

PAGE/PARTY SYSTEM
BLOCK DIAGRAM

FIGURE 9.5-1

Figure 9.5-2 has been deleted.

FLORIDA POWER & LIGHT COMPANY
ST. LUCIE PLANT UNIT 2

FIGURE 9.5-2

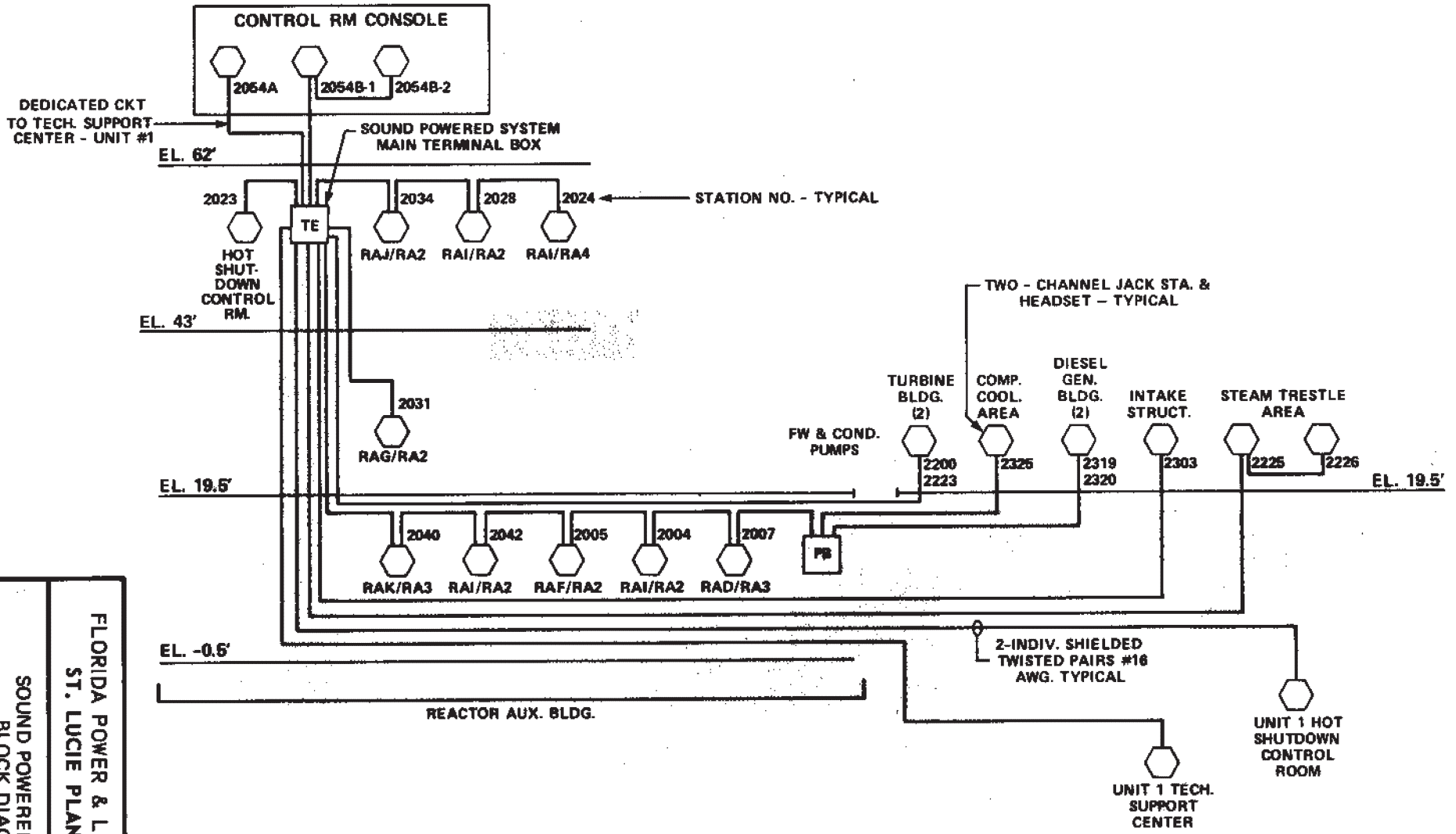

FLORIDA POWER & LIGHT COMPANY
ST. LUCIE PLANT UNIT 2

SOUND POWERED SYSTEM BLOCK DIAGRAM

FIGURE 9.5-3

Figure 9.5-4 & 9.5-5 have been deleted.

FLORIDA POWER & LIGHT COMPANY
ST. LUCIE PLANT UNIT 2

FIGURE 9.5-4
FIGURE 9.5-5

Refer to Drawing
2998-G-086 SH 1

FLORIDA POWER & LIGHT COMPANY
ST. LUCIE PLANT UNIT 2

FLOW DIAGRAM MISCELLANEOUS SYSTEMS

FIGURE 9.5-6

Refer to Dwg.
2998-G-096 SH 1A, B, C

FLORIDA POWER & LIGHT COMPANY
ST. LUCIE PLANT UNIT 2

FLOW DIAGRAM
EMERGENCY DIESEL GENERATOR
SYSTEM DIESEL ENGINE 2A1

FIGURE 9.5-7

Refer to Dwg.
2998-G-096 SH 2A, B, C

FLORIDA POWER & LIGHT COMPANY
ST. LUCIE PLANT UNIT 2

FLOW DIAGRAM
EMERGENCY DIESEL GENERATOR
SYSTEM DIESEL ENGINE 2B2

FIGURE 9.5-8

FIGURE 9.5-9 DELETED

FIGURE 9.5-10 DELETED

Refer to Drawing
2998 - 1885

FLORIDA POWER & LIGHT COMPANY
ST. LUCIE PLANT UNIT 2

AIR INTAKE PIPING
SCHEMATIC

FIGURE 9.5-11

Refer to Dwg.
EMDRAC - 2998 - 1884

FLORIDA POWER & LIGHT COMPANY
ST. LUCIE PLANT UNIT 2

SCHEMATIC DIAGRAM
EXHAUST SYSTEM PIPING

FIGURE 9.5-12

EC282743

Appendix 9.5A, Amendment 23, previously contained the Fire Protection Report. This appendix was removed from the UFSAR as a result of the transition of the St. Lucie Fire Protection Program to a new license condition under 10CFR50.48(c) (known as NFPA 805).

If you have been directed to Appendix 9.5A by another Chapter of the UFSAR or another document, please refer to Amendment 23 of Appendix 9.5A maintained in plant records.

10CFR50.48(c) (NFPA 805) Changes

The License Amendment Request (LAR) submitted to the NRC is documented in L-2013-099 and its subsequent RAIs. The (LAR) was approved by the NRC in the safety evaluation "St. Lucie Plant, Units Nos. 1 and 2 – Issuance of Amendments Regarding Transition to a Risk-Informed, Performance-Based Fire Protection Program in Accordance with Title 10 of the Code of Federal Regulations Section 50.48(c)," dated March 31, 2016 (ML15344A346). As committed to in LAR Table S-2, Item 9, details used in the LAR that originated from the UFSAR are to be carried forward as a Nuclear Record. The record for this commitment is considered to be Amendment 20 of the Unit 2 UFSAR Appendix 9.5A which is maintained in plant records for the life of the plant.

For information on the current fire protection program requirements established under NFPA 805 refer to the Fire Protection Design Basis Document (DBD-FP-1).

9.6 CRANES - OVERHEAD HEAVY LOADS HANDLING SYSTEMS

9.6.1 NUREG-0612, “CONTROL OF HEAVY LOADS AT NUCLEAR PLANTS”

The objectives of NUREG-0612 are: (a) to ensure that all load handling systems at nuclear power plants are designed and operated so that their probability of failure is uniformly small and appropriate for the critical tasks in which they are employed; and (b) to ensure that, for load handling systems in areas where their failure might result in significant consequences, either (1) additional features are provided to ensure that the potential for a load drop is extremely small, or (2) conservative evaluations of load handling accidents indicate that the potential consequences of any load drop are acceptably small.

9.6.2 SYSTEMS SUBJECT TO NUREG-0612

The overhead load handling systems identified in Table 9.6-1 are subject to the general guidelines of NUREG-0612.

9.6.3 IMPLEMENTATION OF NUREG-0612 GUIDELINES

9.6.3.1 Safe Load Paths

Specific load paths are prepared, and referenced in the applicable procedures, for major loads which routinely are carried over the same routes. To provide suitable visual aid to crane operators, an individual is used to lead the heavy load over the path. Deviations require prior approval by the On-site Review Group.

9.6.3.2 Load Handling Procedures

Procedures have been developed for handling heavy loads over or in proximity to irradiated fuels and safe shutdown equipment. This administrative procedure describes the measures taken to ensure that heavy loads remain with the safe load paths. In addition, the procedure defines the safe load paths. The procedure requires that (1) a sign is placed at the controls of each affected crane stating that all heavy loads greater than or equal to 1380 lb shall be carried in the defined safe load path and (2) a map of the safe load paths is posted on the crane.

9.6.3.3 Crane Operator Training

A program for crane operator training, qualification, and conduct has been implemented in accordance with ANSI B30.2-1976, Chapter 2-3 with the following exceptions:

1. Eye test of 20/40 in both eyes for new employees will be required.

2. A crane deadman switch will be used instead of a main line disconnect to secure power because of the power requirements of the crane motor heaters.

3. Controls necessary for crane operation will be tested before beginning a new shift.

4. At shift change, the upper limit device will be tested under no load unless the hook is loaded or unless no crane operation in the area of the upper limit is anticipated.

9.6.3.4 Special Lifting Devices

The following special lifting devices have been identified as subject to compliance with the criteria of NUREG-0612:

- spent fuel transfer cask lifting yoke
- spent fuel transfer cask lifting yoke extension
- core support barrel lift rig
- upper guide structure lift rig

A detailed comparison of the existing design of these devices and the design, fabrication, and testing requirements of ANSI N14.6 has been performed. Results indicate that the spent fuel transfer cask lifting yoke and extension are in compliance with ANSI N14.6-1993; and that the core support barrel and upper guide structure lift rigs are in compliance with ANSI N14.6-1978 with the following limited exceptions relative to stress design factors (3 for minimum yield and 5 for ultimate):

- Upper Guide Structure Lift Rig

Component	Actual Stress	3 x Actual Stress	S_{yield} @ 100°F
A. Spreader Beam	11,600 psi Bending	34,000 psi	30,000 psi
B. Column Plate	14,500 psi Bending	43,500 psi	30,000 psi

- Core Support Barrel Lift Rig

Component	Actual Stress	3 x Actual Stress	S_{yield} @ 100°F
A. Spreader Beam	10,030 psi Bending	30,100 psi	30,000 psi
B. Column Plate	10,714 psi Bending	32,243 psi	30,000 psi

All nonconforming stresses are less than 1/2 of the yield stress, which meets the design requirements in effect at the time of fabrication (1976).

The lift rig was not load tested to 150% capacity.

Both lift rigs were load tested to 125% of operating load prior to use, which was considered a good test standard at the time the lift rig was fabricated. Following the load test all structural welds were liquid penetrant inspected prior to shipment. The 125% load test is considered to be adequate to insure the integrity of the equipment provided visual inspection criteria are employed prior to each use. Specified periodic nondestructive examination of the upper guide structure lift rig and core support barrel lift rig, shall be performed at an interval not to exceed ten years. Additionally, periodic nondestructive examination of the reactor head lift rig shall be performed at an interval not to exceed ten years. [Reference 2, Engineering Evaluation PSL-ENG-SECS-09-015, “Requirements for Periodic Inspection and Testing of Special Lifting Devices in Reactor Containment Building (Unit 2)”].

In lieu of the magnetic particle and liquid penetrant examination techniques, the use of the acoustic emission examination method is acceptable for inspection of the special lifting devices (including the reactor head lift rig) at the St. Lucie Nuclear Plant.

9.6.3.5 Lifting Devices (Not Specifically Designed)

The program for sling use and maintenance meets the requirements of ANSI B30.9. Further, the rated capacities are marked on each sling. Since crane hoisting speeds are relatively slow (less than 30 fpm at rated load), any contribution from a dynamic effect would not be significant. In addition, as required by ANSI B30.9, a safety factor of 5 is applied.

9.6.3.6 Cranes (Inspection, Testing and Maintenance)

The crane inspection, testing, and maintenance program complies with the requirements of ANSI B30.2-1976 with the exception that tests and inspections are performed prior to use where it is not practical to meet the frequencies of ANSI B30.2 for periodic inspection and testing, or where the frequency of crane use is less than the specified inspection and test frequency.

9.6.3.7 Crane Design

St. Lucie Unit 2 cranes comply with the applicable design requirements of ANSI B30.2, CMAA 70 and CMAA 74.

The main hoist for the spent fuel cask handling crane also complies with NUREG-0554, Single-Failure-Proof Cranes for Nuclear Power Plants.

References to Section 9.6

1. FPL Engineering Evaluation PSL-ENG-SECS-07-035, “Use of Acoustic Emission Technology as an Alternate Method for NDE of Special Lifting Devices”

2. FPL Engineering Evaluation PSL-ENG-SECS-09-015, “Requirements for Periodic Inspection and Testing of Special Lifting Devices in Reactor Containment Building (Unit 2)”

TABLE 9.6-1

NUREG-0612 UNIT 2 COMPLIANCE MATRIX

Equipment Designation	Heavy Loads (tons)	Weight or Capacity (tons)	Guideline I Safe Load Paths	Guideline 2 Procedure	Guideline 3 Crane Op Training	Guideline 4 Special Lifting Devices	Guideline 5 Slings	Guideline 6 Crane-Test and Inspection	Guideline 7 Crane Design
Charging pump A, B, & C (3)	1	5	R	C	C	---	C	C	C
Turbine gantry Crane (2)	1	200/35	R	C	C	---	C	C	C
Reactor polar crane	191.4	200/60	C	C	C	---	---	C	C
Auxiliary Telescoping jib	1	1	R	C	C	---	C	C	C
Refueling machine	1	1	R	C	C	---	C	C	C
Refueling machine hoist	1	1	R	C	C	---	C	C	C
Fuel Transfer machine	1	1	R	C	C	---	C	C	C
Spent-fuel handling machine	1	1	R	C	C	---	C	C	C
Refueling canal bulkhead monorail	1.25	3	R	C	C	---	C	C	C
Cask storage pool bulkhead monorail	1.25	3	R	C	C	---	C	C	C
Spent fuel cask handling crane	129.5*	150/25	C	C	C	---	---	C	C
Diesel generator monorails (8)	1	1	R	C	C	---	C	C	C
Intake Structure Bridge Crane	1	45	R	C	C	---	C	C	C

EC287230

Fourteen heavy-load handing systems are excluded because load drop will not cause damage to system or components required for shutdown or decay heat removal.

C = License action complies with NUREG-0612 Guideline.
NC = Applicant action does not comply with NUREG-0612 Guideline.
R = Applicant has proposed revisions/modifications designed to comply with NUREG-0612 Guideline.

* Included the weight of the spent fuel transfer cask lifting yoke and lifting yoke extension