Chapter 7: INSTRUMENTATION AND CONTROLS

TABLE OF CONTENTS

Section	Title	Page
7.1	INTRODUCTION	7.1-1
7.1.1	Identification of Safety-Related Systems	7.1-1
7.1.1.1	Safety Systems	7.1-1
7.1.1.2	Safety Function	7.1-2
7.1.1.3	Power Generation Systems	7.1-3
7.1.1.4	Definition and Symbols	7.1-3
7.1.2	Identification of Safety Criteria	7.1-4
7.1.3	Instrument Setpoint Control Program	7.1-4
7.2	REACTOR PROTECTION SYSTEM	7.2-1
7.2.1	Description	7.2-1
7.2.1.1	System Description	7.2-1
7.2.1.1.1	Identification	7.2-1
7.2.1.1.2	Power Supply	7.2-1
7.2.1.1.3	Physical Arrangement	7.2-2
7.2.1.1.4	Logic	7.2-3
7.2.1.1.5	Operation	7.2-3
7.2.1.1.6	Mode Switch	7.2-5
7.2.1.1.7	Scram Bypass	7.2-6
7.2.1.1.8	Wiring	7.2-7
7.2.1.2	Design Basis Information	7.2-8
7.2.1.2.1	Safety Objective	7.2-8
7.2.1.2.2	Safety Design Bases	7.2-8
7.2.1.2.3	Scram Functions and Trip Settings	7.2-10
7.2.1.2.4	Design Criteria	7.2-19
7.2.1.3	Inspection and Testing	7.2-20
7.2.2	Analysis	7.2-22
7.2.3	ATWS-RPT/ARI	7.2-24
7.2.3.1	Design Basis Information	7.2-25
7.2.3.2	System Description	7.2-25
REFERENCES FOR SECTION 7.2		7.2-27
7.3	ENGINEERED SAFETY FEATURES SYSTEM	7.3-1
7.3.1	Description	7.3-1
7.3.1.1	System Descriptions	7.3-1
7.3.1.1.1	Primary Containment Isolation and Nuclear Steam Supply Shutoff System	7.3-1
7.3.1.1.1.1	Definitions	7.3-1

TABLE OF CONTENTS

Section Title Page

7.3.1.1.1.2 Identification 7.3-2
7.3.1.1.1.3 Power Supply 7.3-2
7.3.1.1.1.4 Physical Arrangement 7.3-2
7.3.1.1.1.5 Logic 7.3-3
7.3.1.1.1.6 Operation 7.3-5
7.3.1.1.1.7 Isolation Valve Closing Devices and Circuits 7.3-8
7.3.1.1.1.8 Isolation Functions and Settings 7.3-12
7.3.1.1.2 Emergency Core Cooling Systems Instrumentation and Control 7.3-26
7.3.1.1.2.1 HPCI System Instrumentation and Control 7.3-26
7.3.1.1.2.2 Automatic Depressurization System Instrumentation and Control 7.3-33
7.3.1.1.2.3 Core Spray System Instrumentation Control 7.3-36
7.3.1.1.2.4 LPCI System Instrumentation and Control 7.3-39
7.3.1.2 Design-Basis Information 7.3-46
7.3.1.2.1 Design Bases for Primary Containment Isolation 7.3-46
7.3.1.2.1.1 Safety Objective 7.3-46
7.3.1.2.1.2 Safety Design Bases 7.3-47
7.3.1.2.2 Design Bases for Emergency Core Cooling Systems Instrumentation and Control 7.3-49
7.3.1.2.2.1 Safety Objective 7.3-49
7.3.1.2.2.2 Safety Design Bases 7.3-50
7.3.1.3 Final System Drawings 7.3-51
7.3.2 Analysis 7.3-51
7.3.2.1 Primary Containment Isolation 7.3-51
7.3.2.2 Emergency Core Cooling System Instrumentation and Control 7.3-54
7.3.3 Instrumentation 7.3-56
7.3.3.1 Containment Isolation Monitoring System 7.3-61
7.3.4 Tests and Inspection 7.3-62
7.3.4.1 Primary Containment Isolation and NSS Shutoff System 7.3-62
7.3.4.2 Emergency Core Cooling Systems 7.3-62
7.3.4.3 Test Provisions and Procedures 7.3-62
7.3.5 Environmental Considerations 7.3-65
7.3.5.1 Primary Containment Isolation and NSS Shutoff System 7.3-65
7.3.5.2 HPCI System 7.3-65
7.3.5.3 Automatic Depressurization System 7.3-66
7.3.5.4 Core Spray System 7.3-66
7.3.5.5 LPCI 7.3-66
REFERENCES FOR SECTION 7.3 ..... 7.3-67

TABLE OF CONTENTS

Section	Title	Page
7.4	SYSTEMS REQUIRED FOR SAFE SHUTDOWN	7.4-1
7.4.1	Description	7.4-1
7.4.1.1	Reactor Trip System	7.4-1
7.4.1.2	Reactor Core Isolation Cooling System	7.4-1
7.4.1.3	High Pressure Coolant Injection System	7.4-3
7.4.1.4	Safety Relief Valves	7.4-3
7.4.1.5	Residual Heat Removal System	7.4-3
7.4.2	Plant Shutdown From Outside the Control Room	7.4-3
7.4.2.1	Description	7.4-3
7.4.2.1.1	General	7.4-3
7.4.2.1.2	Hot Standby	7.4-4
7.4.2.1.3	Cold Shutdown	7.4-4
7.4.2.2	Analysis	7.4-5
7.4.2.2.1	NRC General Design Criterion 19	7.4-5
7.4.2.2.2	IEEE-279-1971	7.4-5
REFERENCES FOR SECTION 7.4		7.4-7
7.5	SAFETY-RELATED DISPLAY INSTRUMENTATION	7.5-1
7.5.1	Reactor, Reactor Coolant, Containment Readouts and Indications	7.5-1
7.5.1.1	Design Criteria.	7.5-1
7.5.1.2	Loss-of-Coolant Accident Information	7.5-2
7.5.1.3	Control Room Accident Monitoring Panel	7.5-6
7.5.1.4	Direct Valve-Position Indication	7.5-6
7.5.2	Automatic Depressurization System Annunciation	7.5-6
7.5.3	Automatic Annunciation of Operating Bypasses	7.5-7
7.5.4	Control Rod Position Indicating System	7.5-7
7.5.5	Detailed Control Room Design Review.	7.5-7
REFERENCES FOR SECTION 7.5		7.5-9
7.6	ALL OTHER INSTRUMENTATION SYSTEMS REQUIRED FOR SAFETY	7.6-1
7.6.1	Neutron Monitoring System	7.6-1
7.6.1.1	Safety Objective	7.6-1
7.6.1.2	Power Generation Objective	7.6-1
7.6.1.3	Identification	7.6-1
7.6.1.4	Source Range Monitor Subsystem	7.6-1
7.6.1.4.1	Power Generation Design Bases	7.6-2
7.6.1.4.2	Physical Arrangement	7.6-2

TABLE OF CONTENTS

Section	Title	Page
7.6.1.4.3	Signal Conditioning	7.6-3
7.6.1.4.4	Trip Functions	7.6-4
7.6.1.4.5	Power Generation Evaluation	7.6-4
7.6.1.4.6	Inspection and Testing	7.6-5
7.6.1.5	Intermediate Range Monitor Subsystem	7.6-5
7.6.1.5.1	Safety Design Bases	7.6-5
7.6.1.5.2	Power Generation Design Bases	7.6-5
7.6.1.5.3	Identification	7.6-6
7.6.1.5.4	Power Supply	7.6-6
7.6.1.5.5	Physical Arrangement	7.6-6
7.6.1.5.6	Signal Conditioning	7.6-6
7.6.1.5.7	Trip Function	7.6-7
7.6.1.5.8	Safety Evaluation	7.6-7
7.6.1.5.9	Power Generation Evaluation	7.6-8
7.6.1.5.10	Inspection and Testing	7.6-8
7.6.1.6	Local Power Range Monitor Subsystem	7.6-8
7.6.1.6.1	Power Generation Design Bases	7.6-9
7.6.1.6.2	Power Supply	7.6-9
7.6.1.6.3	Physical Arrangement	7.6-9
7.6.1.6.4	Signal Conditioning	7.6-10
7.6.1.6.5	Trip Functions	7.6-11
7.6.1.6.6	Power Generation Evaluation	7.6-11
7.6.1.6.7	Inspection and Testing	7.6-12
7.6.1.7	Average Power Range Monitor Subsystem	7.6-12
7.6.1.7.1	Safety Design Bases	7.6-12
7.6.1.7.2	Power Generation Design Bases	7.6-12
7.6.1.7.3	Power Supply	7.6-12
7.6.1.7.4	Signal Conditioning	7.6-13
7.6.1.7.5	Trip Function	7.6-14
7.6.1.7.6	Safety Evaluation	7.6-14
7.6.1.7.7	Power Generation Evaluation	7.6-15
7.6.1.7.8	Inspection and Testing	7.6-15
7.6.1.8	Rod Block Monitor Subsystem	7.6-15
7.6.1.8.1	Power Generation Design Bases	7.6-16
7.6.1.8.2	Power Supply	7.6-16
7.6.1.8.3	Signal Conditioning	7.6-16
7.6.1.8.4	Trip Function	7.6-17
7.6.1.8.5	Isolation	7.6-17

TABLE OF CONTENTS

Section	Title	Page
7.6.1.8.6	Power Generation Evaluation	7.6-18
7.6.1.8.7	Inspection and Testing	7.6-19
7.6.1.9	Traversing Incore Probe Subsystem	7.6-19
7.6.1.9.1	Power Generation Design Basis	7.6-19
7.6.1.9.2	Physical Arrangement	7.6-19
7.6.1.9.3	Signal Conditioning	7.6-21
7.6.1.9.4	Power Generation Evaluation	7.6-22
7.6.1.9.5	Inspection and Testing	7.6-22
7.6.2	Refueling Interlocks	7.6-22
7.6.2.1	Safety Objective	7.6-25
7.6.2.2	Safety Design Bases	7.6-25
7.6.2.3	Safety Evaluation	7.6-25
7.6.2.4	Inspection and Testing	7.6-26
7.6.3	Rod Sequence Control System	7.6-26
7.6.4	Reactor Vessel Instrumentation	7.6-26
7.6.4.1	Safety Objective	7.6-26
7.6.4.2	Safety Design Basis	7.6-27
7.6.4.3	Power Generation Objective	7.6-27
7.6.4.4	Power Generation Design Bases	7.6-27
7.6.4.5	Reactor Vessel Temperature	7.6-27
7.6.4.6	Reactor Vessel Water Level	7.6-28
7.6.4.7	Reactor Vessel Coolant Flow and Differential Pressures	7.6-31
7.6.4.8	Reactor Vessel Internal Pressure	7.6-32
7.6.4.9	Reactor Vessel Top Head Flange Leak Detection	7.6-33
7.6.4.10	Safety Evaluation	7.6-33
7.6.4.11	Inspection and Testing	7.6-33
7.6.5	Safety Relief Valve Low-Low Set Logic	7.6-33
REFERENCES FOR SECTION 7.6.		7.6-35
7.7	CONTROL SYSTEMS NOT REQUIRED FOR SAFETY	7.7-1
7.7.1	Feedwater System Control and Instrumentation	7.7-1
7.7.1.1	Power Generation Objective	7.7-1
7.7.1.2	Power Generation Design Basis	7.7-1
7.7.1.3	System Description	7.7-1
7.7.1.3.1	Reactor Vessel Water Level Measurement	7.7-2
7.7.1.3.2	Steam Flow Measurement	7.7-2
7.7.1.3.3	Feedwater Flow Measurement	7.7-2
7.7.1.3.4	Feedwater Control Signal	7.7-3

TABLE OF CONTENTS

Section	Title	Page
7.7.1.4	Inspection and Testing	7.7-5
7.7.2	Turbine-Generator Instrumentation and Control Systems	7.7-5
7.7.2.1	Power Generation Objectives	7.7-5
7.7.2.2	Power Generation Design Basis	7.7-5
7.7.2.2.1	Electrohydraulic Control (EHC), and Turbine Supervisory Instrumentation (TSI) Controls	7.7-5
7.7.2.2.2	Main Condenser Instrumentation and Control	7.7-6
7.7.2.2.3	Condensate System Instrumentation and Control	7.7-6
7.7.2.2.4	Condensate Demineralizer Instrumentation	7.7-6
7.7.2.3	System Description	7.7-7
7.7.2.3.1	IPR, EHC, and Turbine Bypass Controls	7.7-7
7.7.2.3.2	Low Main Condenser Vacuum Trip	7.7-8
7.7.3	Reactor Manual Control System	7.7-9
7.7.3.1	Power Generation Objective	7.7-9
7.7.3.2	Safety Design Bases	7.7-9
7.7.3.3	Power Generation Design Bases	7.7-9
7.7.3.4	System Description	7.7-9
7.7.3.5	General Operation	7.7-10
7.7.3.5.1	Insert Cycle	7.7-11
7.7.3.5.2	Withdraw Cycle	7.7-12
7.7.3.6	Control Rod Drive Hydraulic System Control	7.7-12
7.7.3.7	Rod Block Interlocks	7.7-12
7.7.3.7.1	General	7.7-13
7.7.3.7.2	Rod Block Functions	7.7-13
7.7.3.7.3	Rod Block Bypasses	7.7-16
7.7.3.7.4	Arrangement of Rod Block Trip Channels	7.7-17
7.7.3.8	Control Rod Information Displays	7.7-18
7.7.3.9	Safety Evaluation	7.7-20
7.7.3.10	Inspection and Testing	7.7-21
7.7.4	Plant Process Computer System	7.7-21
7.7.4.1	Power Generation Objective	7.7-21
7.7.4.2	Power Generation Design Bases	7.7-21
7.7.4.3	Safety Objective	7.7-22
7.7.4.4	Safety Design Basis	7.7-22
7.7.4.5	Computer System Components	7.7-22
7.7.4.5.1	Central Processor	7.7-22
7.7.4.5.2	Bulk Memory Subsystem	7.7-22
7.7.4.5.3	Peripheral I/O Subsystem	7.7-23

TABLE OF CONTENTS

Section Title Page

7.7.4.5.4 Data Acquisition Subsystem (DAS) Hardware 7.7-23
7.7.4.5.5 CRT Color Terminals 7.7-23
7.7.4.6 Reactor Core Performance Function 7.7-23
7.7.4.6.1 Power Distribution Evaluation..... 7.7-23
7.7.4.6.2 Fast Core Monitoring 7.7-24
7.7.4.6.3 LPRM Calibration..... 7.7-24
7.7.4.6.4 Fuel Exposure 7.7-24
7.7.4.6.5 Control Rod Exposure 7.7-24
7.7.4.6.6 LPRM Exposure 7.7-25
7.7.4.6.7 Isotopic Composition of Exposed Fuel 7.7-25
7.7.4.6.8 Stability Monitoring 7.7-25
7.7.4.7 Plant Process Computer System Software 7.7-25
7.7.4.7.1 Data Acquisition and Processing Software 7.7-25
7.7.4.7.2 Balance of Plant (BOP) Software. 7.7-26
7.7.4.7.2.1 Man-Machine Interface (MMI). 7.7-26
7.7.4.7.2.2 NSSS/BOP Post Trip Logging 7.7-27
7.7.4.8 Inspection and Testing 7.7-27
7.7.5 Recirculation Flow Control System 7.7-28
7.7.5.1 Power Generation Objective 7.7-28
7.7.5.2 Power Generation Design Bases 7.7-28
7.7.5.3 Safety Design Bases 7.7-28
7.7.5.4 System Description 7.7-28
7.7.5.4.1 General 7.7-28
7.7.5.4.2 Motor-Generator Set 7.7-29
7.7.5.4.3 Speed Control Components 7.7-30
7.7.5.4.4 Safety Evaluation 7.7-32
7.7.5.4.5 Inspection and Testing 7.7-32
7.7.6 Safety Parameter Display System 7.7-32
7.7.6.1 Power Generation Objective 7.7-32
7.7.6.2 Power Generation Design Bases 7.7-33
7.7.6.3 System Description 7.7-34
7.7.6.3.1 Data Acquisition Subsystem (DAS) 7.7-34
7.7.6.3.2 Host Processor Subsystem 7.7-34
7.7.6.3.3 Colorgraphic User's Terminal (CUT) 7.7-35
7.7.6.4 Safety Parameters and Associated Variables 7.7-35
7.7.6.4.1 Safety Parameters 7.7-35
7.7.6.4.2 Key Plant Variables 7.7-36
7.7.6.5 Emergency Operating Procedure Graphs 7.7-36

TABLE OF CONTENTS

Section	Title	Page
7.7.7	Rod Worth Minimizer (RWM) Microcomputer System	7.7-36
7.7.7.1	Description	7.7-36
7.7.7.2	Rod Worth Minimizer Inputs.	7.7-37
7.7.7.3	Rod Worth Minimizer Outputs.	7.7-38
7.7.7.4	Rod Worth Minimizer Indications	7.7-38
7.7.7.5	Design Objective	7.7-39
7.7.7.6	Design Basis	7.7-39
7.7.7.7	Safety Evaluation.	7.7-39
7.7.7.8	Inspection and Testing.	7.7-39
7.7.7.9	Diagnostics Available for RWM.	7.7-40
7.7.7.9.1	RWM Failure Detection.	7.7-40
7.7.7.9.2	RWM Computer Stall Indication.	7.7-40
REFERENCES FOR SECTION 7.7.		7.7-41

Chapter 7: INSTRUMENTATION AND CONTROLS

LIST OF TABLES

Tables	Title	
7.1-1	Definitions Applicable to Instrumentation and Control of Protection Systems	T7.1-1
7.2-1	Reactor Protection System Scram Settings	T7.2-1
7.2-2	Valve Channel Sensing Logic	T7.2-2
7.2-3	ATWS-RPT-ARI Initiation Instrumentation	T7.2-3
7.3-1	Process Pipelines Penetrating Primary Containment	T7.3-1
7.3-2	Primary Containment Isolation and Nuclear Steam Supply Shutoff System Isolation Setpoints	T7.3-21
7.3-3	High-Pressure Coolant Injection System Instrument Trip Settings	T7.3-23
7.3-4	Automatic Depressurization System Instrument Trip Settings	T7.3-24
7.3-5	Core Spray System Instrumentation	T7.3-25
7.3-6	Low-Pressure Coolant Injection Instrument Trip Settings	T7.3-26
7.4-1	Locations of Remote Shutdown Panels	T7.4-1
7.4-2	Safety-Related Controls, Alternate Shutdown Capability Panels	T7.4-2
7.4-3	Non-Safety-Related Controls and Monitoring Indicators, Alternate Shutdown Capability Panels	T7.4-4
7.4-4	Other Controls and Monitoring Indicators Provided Outside the Main Control Room	T7.4-9
7.4-5	Location of Remote Shutdown Fuse Panels (RSFP)	T7.4-10
7.4-6	Reactor Core Isolation Cooling System Trip Setting	T7.4-11
7.6-1	SRM Trips and Alarms	T7.6-1
7.6-2	IRM Trips and Alarms	T7.6-2

LIST OF TABLES

Tables Title

7.6-3 LPRM Trips and Alarms T7.6-3

7.6-4 APRM Trips and Alarms T7.6-4

7.6-5 Refueling Interlock Effectiveness T7.6-5

7.6-8 Reactor Vessel Instrumentation Instrument Specifications T7.6-10

7.7-1 Safety Parameter Display System Safety Parameters and Associated Key Plant Variables T7.7-1

7.7-2 Safety Parameter Display System Key Plant Variable Ranges T7.7-6

LIST OF FIGURES

Figure	Title
7.1-1	Piping and Instrumentation Symbols, Sheets 1 through
7.1-2	Logic Symbols Used on Functional Control Diagrams
7.2-1	Reactor Protection System Schematic Diagram, Sheets 1 through 3
7.2-2	Schematic Diagram of Logics in One Trip System
7.2-3	Schematic Diagram of Actuators and Actuator Logics
7.2-4	Relationship between Neutron Monitoring System and Reactor Protection System
7.2-5	Functional Control Diagram for Neutron Monitoring Logics
7.2-6	Typical Arrangement of Channels and Logics
7.2-7	Turbine Stop Valve Performance Characteristics
7.2-8	Typical Configuration for Turbine Stop Valve Closure Scram
7.2-9	Typical Configuration for Main Steam Line Isolation Scram
7.2-10	DAEC ATWS-RPT/ARI
7.3-1	Temperature Switch Location RCIC and HPCI Steam Line Isolation, Sheets 1 through 3
7.3-2	Temperature Switch Location Main Steam Line Isolation Sheets 1 through 3
7.3-3	Piping Arrangement Drawing, Sheets 1 through 9
7.3-4	Typical Isolation Control System for Main Steam Line Isolation Valves
7.3-5	Typical Isolation Control System Using Motor-Operated Valves
7.3-6	Nuclear Boiler System - FCD, Sheets 1 through 3
7.3-7	Main Steam Line Isolation Valve, Schematic Control Diagram
7.3-8	Main Steam Isolation Valve Performance Characteristic

LIST OF FIGURES

Figure	Title
7.3-9	Typical ECCS Actuation and Initiation Logic
7.3-10	HPCI System - FCD, Sheets 1 through 3
7.3-11	Typical ECCS Trip System Actuation Logic
7.3-12	Core Spray System - FCD
7.3-13	RHR System - FCD, Sheets 1 through 3A
7.3-14	LPCI Break Detection Logic Component Arrangement
7.3-15	Recirculation System - FCD, Sheets 1 through 3
7.3-16	Main Steam Line High Flow Channels
7.3-17	Typical Arrangement for Main Steam Line Break Detection by Flow Measurement
7.3-18	Typical Elbow Flow Sensing Arrangement
7.3-19	Typical HPCI or RCIC High Exhaust Pressure Detection Arrangement
7.3-20	HPCI or RCIC Room Temperature Detector Arrangement
7.3-21	Reactor Water Cleanup Break Detection by Differential Flow Measurement
7.3-22	Reactor Water Cleanup Break Detection by High Ambient and High Differential Temperature Measurement
7.6-1	Neutron Monitor - Instrument and Electrical Diagram, Sheets 1 and 2
7.6-2	SRM/IRM Neutron Monitoring Unit
7.6-3	Detector Drive System Schematic
7.6-4	Functional Block Diagram of SRM Channel

LIST OF FIGURES

Figure	Title
7.6-5	Neutron Monitoring System - FCD
7.6-6	Ranges of Neutron Monitoring System
7.6-7	Functional Block Diagram of IRM Channel
7.6-8	Typical IRM Circuit Arrangement for Reactor Protection System Input
7.6-9	Control Rod Withdrawal Error During Start-Up
7.6-10	Deleted
7.6-11	Power Range Neutron Monitoring Unit
7.6-12	Flow Reference and RBM Instrumentation
7.6-13	Typical APRM Circuit Arrangement for Reactor Protection System Input
7.6-14	APRM Tracking Reduction in Power by Flow Control
7.6-15	APRM Tracking With On-Limits Control Rod Withdrawal
7.6-16	Assignment of Power Range Detector Assemblies to RBM
7.6-17	Assignment of LPRM Strings to TIP Machines
7.6-18	Traversing Incore Probe Subsystem Block Diagram
7.6-19	Traversing Incore Probe Assembly
7.6-20	TIP Equipment and Neutron Monitoring System Arrangement
7.6-21	Traversing Incore Probe Functional Control Diagram
7.6-30	Reactor Vessel Level Indication
7.6-31	Safety/Relief Valve Low-Low Set Function

LIST OF FIGURES

Figure	Title
7.6-32	Deleted
7.7-1	Feedwater Control System - Instrument and Electrical Diagram
7.7-2	CRD Hydraulic System - FCD, Sheets 1 through 7
7.7-3	Arrangement Reactor Coolant BB
7.7-4	Input Signals to Four-Rod Display
7.7-5	Deleted
7.7-6	Recirculation Flow Control Illustration

CHAPTER 7
INSTRUMENTATION AND CONTROLS

7.1 INTRODUCTION

Chapter 7 presents the details of major instrumentation and control systems in the plant. Some of these systems are safety systems; others are power generation systems.

7.1.1 IDENTIFICATION OF SAFETY-RELATED SYSTEMS

7.1.1.1 Safety Systems

The safety systems described in this chapter are the following:

1. Nuclear safety systems and engineered safeguards (required for accidents and abnormal operational transients), as follows:

    a. Reactor protection system.

    b. Primary containment isolation and nuclear steam supply (PCI/NSS) shutoff systems.

    c. Emergency core cooling systems control and instrumentation.

    d. Neutron monitoring system (specific portions).

2. Process safety systems (required for planned operation), are as follows:

    a. Neutron monitoring system (specific portion).

    b. Refueling interlocks.

    c. Reactor vessel instrumentation.

    d. Process radiation monitors (except main steam line radiation monitoring system).

7.1.1.2 Safety Function

The major functions of the safety systems are summarized as follows:

1. Reactor Protection System

   The RPS initiates an automatic reactor shutdown (scram) when monitored nuclear system variables exceed preestablished limits. This action limits fuel damage and system pressure and thus restricts the release of radioactive material.

2 Primary Containment Isolation and Nuclear Steam Supply Shutoff System

   This system initiates the closure of various automatic isolation valves in response to out-of-limit nuclear system variables. The action provided limits the loss of coolant from the reactor vessel and contains radioactive materials either inside the reactor vessel or inside the primary containment. The system responds to various indications of pipe breaks or radioactive material release.

3. Emergency Core Cooling Systems Control and Instrumentation

   This chapter describes the arrangement of control devices for high-pressure coolant injection (HPCI), automatic depressurization system (ADS), core spray (CS), and the low-pressure coolant injection (LPCI) mode of residual heat removal (RHR).

4. Neutron Monitoring System

   The neutron monitoring system uses incore neutron detectors to monitor core neutron flux. The safety function of the neutron monitoring system is to provide a signal to shut down the reactor when an overpower indicator. In addition, the neutron monitoring system provides the required power level indication during planned operation.

5. Main Steam Radiation Monitoring System

   Gamma-sensitive radiation monitors are installed in the vicinity of the main steam lines just inside the steam tunnel. These monitors can detect a gross release of fission products from the fuel by measuring the gamma radiation coming from the steam lines. As approved in Amendment 261, these monitors no longer have a safety function.

6. Refueling Interlocks

The refueling interlocks serve as a backup to procedural core reactivity control during refueling operation.

7. Reactor Vessel Instrumentation

The reactor vessel instrumentation monitors and transmits information concerning key reactor vessel operating parameters during planned operations to ensure that sufficient control of these parameters is possible.

8. Process Radiation Monitors (except Main Steam Line Radiation Monitoring Systems)

A number of radiation monitoring systems are provided on process liquid and gas lines to provide control and/or alarm of the radioactive material release from the site to ensure that such releases are within the limits of applicable guidelines.

7.1.1.3 Power Generation Systems

The power generation systems described in this chapter are the following:

1. Feedwater system control and instrumentation (Section 7.7.1).

2. Turbine-generator control and instrumentation (Section 7.7.2).

3. Reactor manual control (Section 7.7.3).

4. Process computer (Section 7.7.4).

5. Recirculation flow control system (Section 7.7.5).

7.1.1.4 Definitions and Symbols

The complexity of the instrumentation and control systems requires the use of certain terminology and symbolism for clarification in the description of the protection systems.

Table 7.1-1 presents definitions applicable to the instrumentation and control of protection systems.

Figure 7.1-1, Sheets 1 through 4, presents piping and instrumentation symbols. Figure 7.1-2 presents logic symbols used on functional control diagrams.

7.1.2 IDENTIFICATION OF SAFETY CRITERIA

Safety criteria for systems are identified on a case-by-case basis within the various sections of this chapter.

7.1.3 INSTRUMENT SETPOINT CONTROL PROGRAM

The DAEC Setpoint Control Program establishes the design controls on instrument setpoints required by the Technical Specifications and for other selected instrumentation based upon its safety significance. The Program establishes the methodologies for determining the Allowable Values and Trip Setpoints that ensure, with a high probability, the design or safety analysis limits are not exceeded in the event of transients or accidents. The DAEC Instrument Setpoint Methodology is based on the General Electric (GE) Instrument Setpoint Methodology; NEDC-31336, "General Electric Instrumentation Setpoint Methodology," which has NRC approval. The Allowable Values and Trip Setpoints have been established from each applicable design or safety analysis limit by accounting for instrument accuracy, calibration and drift uncertainties, as well as process measurement accuracy, primary element accuracy and environmental effects. Administrative procedures have been established that ensure the proper design controls are applied to activities that could impact the setpoint calculations, such as, testing practices, plant modifications and procedure revisions.

Table 7.1-1

DEFINITIONS APPLICABLE TO INSTRUMENTATION AND CONTROL OF PROTECTION SYSTEMS

Sensor - A sensor is that part of a channel used to detect variations in a measured variable.

Channel - A channel is an arrangement of one or more sensors and associated components used to evaluate plant variables and produce discrete outputs used in logic. A channel terminates and loses its identity where individual channel outputs are combined in logic.

Logic - Logic is that array of components that combines individual bistable output signals to produce decision outputs.

Trip - A trip is the change of state of bistable device that represents the change from a normal condition.

Trip system - A trip system is that portion of a system encompassing one or more channels, logic, and bistable devices used to produce signals to the actuation device.

Setpoint* - A setpoint is that value of the monitored variable that causes a channel trip.

Allowable Value - The instrument setting used to define Channel Operability in the Technical Specifications.

Actuation device - An actuation device is an electrical or electromechanical module controlled by an electrical decision signal and produces mechanical operation of one or more activated devices.

Activated device - An activated device is a mechanical component used to accomplish an action. An activated device is controlled by an actuation device.

Component - Items from which the system is assembled (e.g., resistors, capacitors, wires, connectors, transistors, switches, springs, pumps, valves, piping, heat exchangers, vessels).

Module - Any assembly of interconnected components that constitutes an identifiable device, instrument, or piece of equipment.

Incident detection circutry - Incident detection circuitry includes those trip systems that are used to sense the occurrence of an incident. Such circuitry is described and evaluated separately where the incident detection circuitry is common to several systems.

* Other synonymous terms are used throughout the UFSAR, such as trip setpoint, trip setting, nominal setting, nominal trip setpoint and trip level.

SYMBOLS

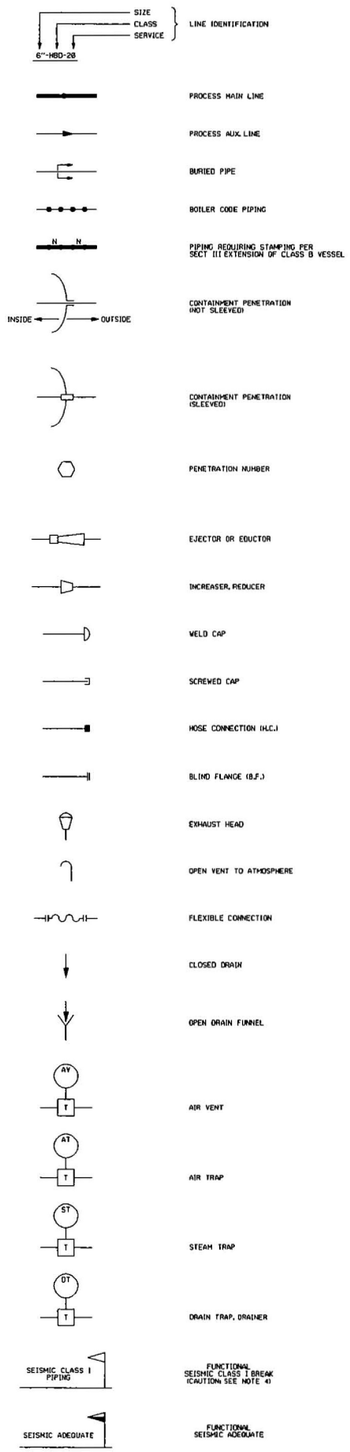

SYMBOLS

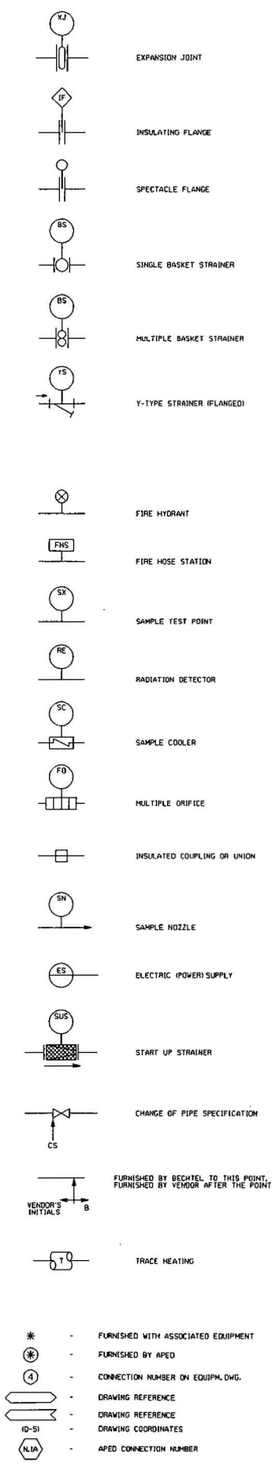

VALVES
(NOTE 5)

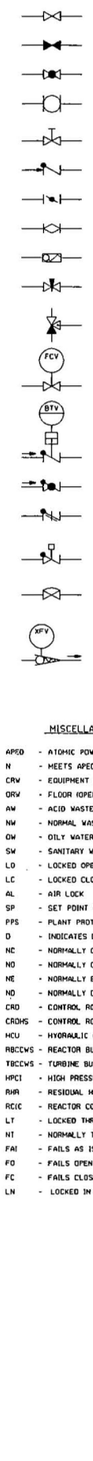

MISCELLANEOUS ABBREVIATIONS

APED	-	ATOMIC POWER EQUIPM. DEPT. OF G.E. CO.
N	-	MEETS APED REQ'TS FOR NUCLEAR SERVICE
CRW	-	EQUIPMENT (CLOSED) RADWASTE
ORW	-	FLOOR (OPEN) RADWASTE
AW	-	ACID WASTE (CORROSIVE, CAUSTIC)
NW	-	NORMAL WASTE (CONVENTIONAL)
OW	-	OILY WATER WASTE
SW	-	SANITARY WASTE
LO	-	LOCKED OPEN
LC	-	LOCKED CLOSED
AL	-	AIR LOCK
SP	-	SET POINT (CONTROL)
PPS	-	PLANT PROTECTION SYSTEM
D	-	INDICATES DOUBLE PACKED STEM
NC	-	NORMALLY CLOSED
NO	-	NORMALLY OPEN
NE	-	NORMALLY ENERGIZED
ND	-	NORMALLY DE-ENERGIZED
CRD	-	CONTROL ROD DRIVE
CRDHS	-	CONTROL ROD DRIVE HYDRAULIC SYSTEM
HCU	-	HYDRAULIC CONTROL UNIT
RBCCWS	-	REACTOR BUILDING CLOSED COOLING WATER SYSTEM
TBCCWS	-	TURBINE BUILDING CLOSED COOLING WATER SYSTEM
HPCI	-	HIGH PRESSURE COOLANT INJECTION
RHR	-	RESIDUAL HEAT REMOVAL
RCIC	-	REACTOR CORE ISOLATION COOLING
LT	-	LOCKED THROTTLED
NT	-	NORMALLY THROTTLED
FAI	-	FAILS AS IS
FO	-	FAILS OPEN
FC	-	FAILS CLOSED
LN	-	LOCKED IN NEUTRAL

PIPING AND INSTRUMENT DIAGRAMS

BECH-M100	P.&I.D. PIPING SYMBOLS
BECH-M101	P.&I.D. INSTRUMENT SYMBOLS
BECH-M102	P.&I.D. INSTRUMENT IDENTIFICATIONS
BECH-M103(1)	P.&I.D. MAIN STEAM, TURBINE STOP AND CONTROL VALVES
BECH-M103(2)	P.&I.D. MAIN STEAM, HIGH AND LOW PRESSURE TURBINES
BECH-M103(3)	P.&I.D. MAIN STEAM, MOISTURE SEPARATOR & REHEATERS
BECH-M104(1)	P.&I.D. TURBINE STEAM SEALS
BECH-M104(2)	P.&I.D. FEEDWATER HEATERS 1E003A, 4A, 5A AND 6A
BECH-M104(3)	P.&I.D. FEEDWATER HEATERS 1E003A, 2A AND MAIN CONDENSER 1E007A
BECH-M105(1)	P.&I.D. STEAM AIR EJECTOR
BECH-M105(2)	P.&I.D. FEEDWATER HEATERS 1E003B, 2B AND MAIN CONDENSER 1E007B
BECH-M105(3)	P.&I.D. FEEDWATER HEATERS 1E003B, 4B, 5B AND 6B
BECH-M106	P.&I.D. COND/FEEDWATER
BECH-M107	P.&I.D. COND/FEEDWATER
BECH-M108	P.&I.D. COND/DEMIN SYSTEM
BECH-M109	P.&I.D. COND/DEMIN SYSTEM
BECH-M110	P.&I.D. MAKEUP DEMINERALIZER SYSTEM
BECH-M111	P.&I.D. GENERAL SERVICE WATER SYSTEM
BECH-M112	P.&I.D. REACTOR BLDG COOL WATER SYSTEM
BECH-M113	P.&I.D. RHR SERVICE WATER AND EMERG. SERVICE WATER
BECH-M114	P.&I.D. NUCLEAR BOILER SYSTEM
BECH-M115	P.&I.D. REACTOR VESSEL INSTRUMENTATION
BECH-M116	P.&I.D. REACTOR RECIRCULATION SYSTEM
BECH-M117	P.&I.D. CONTROL ROD DRIVE HYDRAULIC SYSTEM
BECH-M118	P.&I.D. CONTROL ROD DRIVE HYDRAULIC SYSTEM
BECH-M119	P.&I.D. RESIDUAL HEAT REMOVAL SYSTEM
BECH-M120	P.&I.D. RESIDUAL HEAT REMOVAL SYSTEM
BECH-M121	P.&I.D. CORE SPRAY SYSTEM
BECH-M122	P.&I.D. HPCI SYSTEM STEAM SIDE
BECH-M123	P.&I.D. HPCI SYSTEM WATER SIDE
BECH-M124	P.&I.D. RCIC SYSTEM STEAM SIDE
BECH-M125	P.&I.D. RCIC SYSTEM WATER SIDE
BECH-M126	P.&I.D. STANDBY LIQUID CONTROL SYSTEM
BECH-M127	P.&I.D. REACTOR WATER CLEANUP SYSTEM
BECH-M128	P.&I.D. REACTOR WATER FILTER DEMIN
BECH-M129	P.&I.D. RIVER WATER SUPPLY INTAKE STRUCTURE
BECH-M130(01)	P.&I.D. INSTRUMENT AND SERVICE AIR COMPRESSORS 1K098A, B AND C COOLING SYSTEM
BECH-M130(02)	P.&I.D. INSTRUMENT AND SERVICE AIR COMPRESSORS 1K098A, B AND C
BECH-M130(03)	P.&I.D. INSTRUMENT AND SERVICE AIR COMPRESSORS 1K001A, B AND C
BECH-M130(04)	P.&I.D. INSTRUMENT AIR DRYERS, TURBINE BLDG. BASEMENT
BECH-M130(05)	P.&I.D. INSTRUMENT AIR SYSTEM, TURBINE BLDG. AND OFFGAS AREAS
BECH-M130(06)	P.&I.D. INSTRUMENT AIR SYSTEM, TURBINE BLDG. HEATER BAY AREA, PUMP HOUSE AREA
BECH-M130(07)	P.&I.D. INSTRUMENT AIR SYSTEM, REACTOR BLDG. TORUS ROOM, RADWASTE BLDG. HPCI, RCIC AREAS
BECH-M130(08)	P.&I.D. INSTRUMENT AIR SYSTEM, REACTOR BLDG. REFUEL FLOOR HVAC CONTROLS, KAMANS
BECH-M130(09)	P.&I.D. SERVICE AIR SYSTEM
BECH-M130(10)	P.&I.D. BREATHING AIR COMPRESSORS 1K028A, B AND SUPPLY
BECH-M131	P.&I.D. TURBINE LUBE OIL SYSTEM
BECH-M132(1)	P.&I.D. DIESEL GENERATOR SYSTEM
BECH-M132(2)	P.&I.D. 1G031 STANDBY DIESEL GENERATOR
BECH-M132(3)	P.&I.D. 1G021 STANDBY DIESEL GENERATOR
BECH-M133(1)	P.&I.D. FIRE PROTECTION
BECH-M133(2)	P.&I.D. FIRE PROTECTION
BECH-M133(3)	P.&I.D. FIRE PROTECTION HOSE STATIONS
BECH-M133(4)	P.&I.D. FIRE PROTECTION DELUGE SYSTEMS
BECH-M133(5)	P.&I.D. FIRE PROTECTION SPRINKLER SYSTEMS
BECH-M134	P.&I.D. FUEL POOL COOLING AND CLEANUP SYSTEM
BECH-M135	P.&I.D. FUEL POOL FILTER DEMIN. SYSTEM
BECH-M136	P.&I.D. SERVICE CONDENSATE SYSTEM
BECH-M137(1)	P.&I.D. RADWASTE SUMP SYSTEM
BECH-M137(2)	P.&I.D. RADWASTE SUMP SYSTEM
BECH-M138(1)	P.&I.D. EQUIPMENT RADWASTE SYSTEM (CLOSED)
BECH-M138(2)	P.&I.D. EQUIPMENT RADWASTE SYSTEM (CLOSED)
BECH-M139	P.&I.D. FLOOR DRAIN RADWASTE SYSTEM, OPEN
BECH-M140	P.&I.D. RADWASTE SOLIDS HANDLE SYSTEM
BECH-M141	P.&I.D. OFF GAS SYSTEM
BECH-M142	P.&I.D. CIRCULATING WATER SYSTEM
BECH-M143(1)	P.&I.D. CONTAINMENT ATMOSPHERE CONTROL SYSTEM
BECH-M143(2)	P.&I.D. CONTAINMENT ATMOSPHERE CONTROL SYSTEM
BECH-M143(3)	P.&I.D. CONTAINMENT ATMOSPHERE CONTROL SYSTEM
BECH-M143(4)	P.&I.D. CONTAINMENT ATMOSPHERE CONTROL SYSTEM
BECH-M144(1)	P.&I.D. COOLING WATER SYSTEM
BECH-M144(2)	P.&I.D. COOLING WATER SYSTEM
BECH-M145(1)	P.&I.D. ELECTRO HYDRAULIC FLUID POWER UNIT
BECH-M145(2)	P.&I.D. STATOR WINDING COOLING WATER SYSTEM
BECH-M145(3)	P.&I.D. GAS CONTROL PIPING SYSTEM
BECH-M145(4)	P.&I.D. HYDROGEN SEAL OIL SUPPLY SYSTEM
BECH-M146	P.&I.D. SERVICE WATER SYSTEM PUMPHOUSE
BECH-M147	P.&I.D. TURBINE BUILDING SAMPLE SYSTEM
BECH-M148	P.&I.D. AREA RADIATION MONITOR SYSTEM
BECH-M149	P.&I.D. OFFGAS RECOMBINER
BECH-M150	P.&I.D. PLANT AIR FLOW DIAGRAM
BECH-M151	P.&I.D. CONTROL BLDG. AND TSC AIR FLOW DIAGRAM
BECH-M152	P.&I.D. REACTOR BLDG. AIR FLOW DIAGRAM
BECH-M153	P.&I.D. TURBINE BLDG. AIR FLOW DIAGRAM
BECH-M154	P.&I.D. HVAC RADWASTE BLDG. AIR FLOW DIAGRAM
BECH-M155	P.&I.D. ADMIN. BLDG. AIR FLOW DIAGRAM
BECH-M156	P.&I.D. DRYWELL AIR FLOW DIAGRAM
BECH-M157(1)	P.&I.D. DRYWELL COOLING WATER SYSTEM
BECH-M157(2)	P.&I.D. DRYWELL COOLING WATER SYSTEM
BECH-M158	P.&I.D. HVAC AIR FLOW DIAGRAM STANDBY GAS TREATMENT SYSTEM
BECH-M159	P.&I.D. VENT SYSTEM TURBINE BLDG.
BECH-M160(1)	P.&I.D. AUXILIARY HEATING SYSTEM MAIN LOOP
BECH-M160(2)	P.&I.D. AUXILIARY HEATING SYSTEM BOILER
BECH-M161	P.&I.D. AIR CONDITIONING SYSTEM CONTROL BLDG.
BECH-M162	P.&I.D. AUXILIARY HEATING SYS. REACTOR BLDG.
BECH-M163	P.&I.D. AUXILIARY HEATING SYS. TURBINE BLDG.
BECH-M164	P.&I.D. VENT SYSTEM RADWASTE BLDG.
BECH-M165	P.&I.D. MAIN PLANT AIR INTAKE AND MG ROOM
BECH-M166	P.&I.D. COOLING AND HEATING SYSTEM PLANT AIR SUPPLY
BECH-M167	P.&I.D. ADMIN. BLDG. HEATING AND COOLING SYSTEM
BECH-M168	P.&I.D. ADMIN. BLDG. HEATING AND COOLING SYSTEM
BECH-M169(1)	P.&I.D. CONTROL BLDG. HEATING SYSTEM
BECH-M169(2)	P.&I.D. CONTROL BLDG. COOLING-CHILLED WATER SYSTEM
BECH-M169(3)	P.&I.D. CONTROL BLDG. CHILLERS 1VCH001A AND 1VCH001B
BECH-M170	P.&I.D. HVAC MISC. CONTROL SYSTEM
BECH-M171	P.&I.D. REACTOR BLDG. HVAC COOLING SYSTEM
BECH-M172	P.&I.D. AIR FLOW DIAGRAM HEATING AND COOLING SYSTEM MACHINE SHOP/OFFGAS RETENTION BLDG.
BECH-M173	P.&I.D. AIR FLOW DIAGRAM STANDBY FILTER
BECH-M174	P.&I.D. DRYWELL HVAC FAN SYSTEM
BECH-M175	P.&I.D. AIR FLOW DIAGRAM PUMPHOUSE
BECH-M176(1)	P.&I.D. REACTOR BLDG. EXHAUST PLENUM AND OFFGAS STACK
BECH-M176(2)	P.&I.D. REACTOR BLDG. VENTILATION SYSTEM
BECH-M177	P.&I.D. INTAKE STRUCTURE AND TSC CONTROL DIAGRAM
BECH-M179	P.&I.D. HVAC SYMBOLS AND ABBREVIATION
BECH-M180	P.&I.D. CHLORINATION AND ACID FEED SYSTEM
BECH-M181	P.&I.D. CONTAINMENT ATMOSPHERE MONITOR SYSTEM
BECH-M182	P.&I.D. RADWASTE EVAPORATOR SYSTEM
BECH-M183	P.&I.D. RADWASTE SAMPLE SYSTEM
BECH-M184	P.&I.D. MAIN STEAM ISOLATION VALVE LEAK CONTROL MSIV
BECH-M185	P.&I.D. CAROX SYSTEM
BECH-M186	P.&I.D. RADWASTE AND STORAGE HANDLING SYSTEM
BECH-M187	P.&I.D. POST ACCIDENT SAMPLING SYSTEM
BECH-M188(1)	P.&I.D. LOW LEVEL RADWASTE HVAC SYSTEM
BECH-M188(2)	P.&I.D. LOW LEVEL RADWASTE HVAC SYSTEM
BECH-M188(3)	P.&I.D. AIR FLOW DIAGRAM LLRPSF
BECH-M188(4)	P.&I.D. AIR FLOW DIAGRAM LLRPSF
BECH-M189(1)	P.&I.D. HYDROGEN WATER CHEMISTRY SYSTEM
BECH-M189(2)	P.&I.D. HYDROGEN WATER CHEMISTRY SYSTEM-CAVS
BECH-M189(3)	P.&I.D. ZINC INJECTION SYSTEM

NOTES:

1. THE SYMBOLS SHOWN HERE ARE FOR USE WITH P.&I.D.'S BECH-M100 THROUGH M149 & M180 THROUGH M189 ONLY. REFER TO BECH-M179 FOR SYMBOLS AND ABBREVIATIONS USED ON THE HV/AC P.&I.D.'S M150 THROUGH M178.
2. FOR MECH., ELECT. AND HVAC DWGS. OF THE DATA ACQUISITION CENTER SEE VENDOR PRINTS A859-001 SERIES.
3. SEISMIC ADEQUATE FLAG INCORPORATED PER DCP-1554.
4. PIPING STRUCTURAL RESTRAINTS OUTSIDE THIS SEISMIC CLASS I BREAK MAY BE PART OF THE SEISMIC CLASS I STRUCTURAL BOUNDARY.
5. MANUAL VALVES IN PROCESS AUXILIARY LINES (SECONDARY LINES) CAN BE SHOWN USING THE GATE VALVE SYMBOL, UNLESS THE VALVE TYPE IS IMPORTANT TO THE PROCESS.

DUANE ARNOLD ENERGY CENTER
IES UTILITIES
UPDATED FINAL SAFETY ANALYSIS REPORT

PIPING AND INSTRUMENTATION SYMBOLS

FIGURE 7.1-1 SH. 1

LINES

- CONNECTION TO PROCESS, MECHANICAL LINK OR INSTRUMENT INPUT
- PNEUMATIC SIGNAL
- ELECTRIC SIGNAL
- CAPILLARY TUBING (FILLED SYSTEM)
- HYDRAULIC SIGNAL
- RADIATION OR SONIC SIGNAL (WITHOUT WIRING OR TUBING)
- A/S — INSTRUMENT AIR SUPPLY
- W/S — WATER SUPPLY
- G/S — GAS SUPPLY
- N/S — NITROGEN SUPPLY
- P — PURGE

NOTE:
THE MEANS OF REGULATING PURGE MAY BE SHOWN IN PLACE OF PURGE SYMBOL

INSTRUMENTS

- (1/2" DIA.) LOCAL INSTRUMENT INCLUDING TRANSMITTER FOR SINGLE MEASURED VARIABLE
- LOCAL INSTRUMENT FOR TWO MEASURED VARIABLES OR MORE THAN ONE FUNCTION
- PANEL MOUNTED INSTRUMENT FOR SINGLE MEASURED VARIABLE
- PANEL MOUNTED INSTRUMENT FOR TWO MEASURED VARIABLE OR MORE THAN ONE FUNCTION

SEE NOTE 2 FOR STANDARD LOCATION OF TEXT ENTRIES AROUND INSTRUMENT BALLOON

DIGITAL DATA SYSTEM-COMPUTER

(7/16 x 3/4)
A-B000
- MEASURED VARIABLE (TEMP., PRESS., ETC.)
- COMPUTER POINT IDENTIFICATION (SEE 1/8 LIST-DWG. NO. 7884-M-482)
- FUNCTIONAL IDENTIFICATION
  A-ANALOG
  C-DIGITAL OR CONTACT

CIMS — CONTAINMENT ISOLATION MONITORING SYSTEM. (PANEL 1C500)

DATA ACQUISITION SYSTEM-SPDA

T
A2057
- MEASURED VARIABLE
  SEE CHART DWG. NO. 7884-M-102
- SPDS POINT IDENTIFICATION
  A-ANALOG
  D-DIGITAL OR CONTACT
  REF-MASTER SIGNAL LIST

V A R I A B L E S

TYPICAL CONNECTION-ANY VARIABLE

- DIRECT CONNECTION PROCESS BLOCK VALVE SYMBOL OPTIONAL
- ELECTRICAL CONNECTION
- FILLED SYSTEM, DIRECT CONNECTION
- IN LINE DEVICE
- RADIATION OR SONIC SENSING
- DIAPHRAGM SEAL CONNECTION

FLOW

- ORIFICE PLATE OR RESTRICTION ORIFICE
- ORIFICE PLATE IN QUICK CHANGE FITTING
- VENTURI TUBE OR FLOW NOZZLE
- PITOT OR PITOT VENTURI TUBE
- FLUME
- WEIR
- TURBINE-OR PROPELLER-TYPE PRIMARY ELEMENT
- ROTAMETER
- IN-LINE INSTR. SUCH AS: MAGNETIC FLOWMETER, DISPLACEMENT METER, MASS FLOWMETER FLOW SIGHT GLASS
- FLOW STRAIGHTENING VANES

LEVEL

- GAGE GLASS, FLOAT OR DISPLACEMENT-TYPE LEVEL INSTRUMENT
- DIFFERENTIAL-PRESSURE TYPE LEVEL INSTRUMENT
- (IF REQ'D) FLANGE-MOUNTED DIFFERENTIAL-PRESSURE TYPE LEVEL TRANSMITTER
- INTERNAL BALL-FLOAT-TYPE LEVEL INSTRUMENT
- GAGE-BOARD-TYPE LEVEL INSTRUMENT

TEMPERATURE

- DUAL OR DUPLEX THERMOCOUPLE IN ONE WELL
- SINGLE THERMOCOUPLE NORMALLY RECORDED, OPTIONALLY INDICATED
- SINGLE THERMOCOUPLE, PARALLEL WIRED
- RTD — RESISTANCE TEMP. DETECT.

CONTROL VALVE BODIES

- FO — GLOBE, GATE OR OTHER IN-LINE TYPE NOT OTHERWISE IDENTIFIED
  FO INDICATES FAIL OPEN
  FC INDICATES FAIL CLOSED
  FL INDICATES FAIL LOCKED
  FI INDICATES FAIL INDETERMINATE
- ANGLE
- BUTTERFLY, DAMPER OR LOUVER
- BALL
- THREE-WAY
  F = FAIL POSITION
- FOUR-WAY
- DIAPHRAGM (SAUNDERS-TYPE)
- PLUG
- PINCH VALVE
- X — UNCLASSIFIED. (TYPE OF BODY IS WRITTEN IN OR ADJACENT TO SYMBOL)
  NOTE: LINE DRAWN THROUGH VALVE BODY OPTIONAL

ACTUATORS

- AO — (IF REQ'D) PNEUMATIC ACTUATOR
  AO INDICATES AIR OPENS
  AC INDICATES AIR CLOSES
- DIAPHRAGM, PRESSURE-BALANCED
- (ELECTRIC) ROTARY MOTOR (SHOWN TYPICALLY WITH ELECTRIC SIGNAL)
- CYLINDER, SINGLE-ACTING; ALSO DOUBLE-ACTING CYLINDER THAT IS ASSEMBLED WITH PILOT, SO THAT ACTUATOR ASSEMBLY IS ACTUATED BY ONE CONTROLLED INPUT
- S — CYLINDER, DOUBLE-ACTING, WITH ACTUATING PILOT VALVE
- CYLINDER, DOUBLE-ACTING ASSEMBLED WITHOUT PILOT
- HAND ACTUATOR (MOUNTED AT TOP SIDE, OR BOTTOM OF ACTUATED DEVICE AS APPLICABLE)
- ELECTRO-HYDRAULIC
- X — UNCLASSIFIED (TYPE OF ACTUATOR TO BE WRITTEN ADJACENT TO THE SYMBOL)
- SV, S, R — SOLENOID RESET (OPTIONAL)
- CV — CONTROL VALVE SYMBOL, FOR ANY APPLICATION
- E/P — ELECTRO-PNEUMATIC
- (IF SHOWN) POSITION MODULATOR ON PNEUMATIC ACTUATOR

SELF-ACTUATED DEVICES

FLOW

- (UP-STREAM REG) FCV (DOWNSTREAM REG) — FLOW REGULATORS, SELF-CONTAINED

LEVEL

- LCV — LEVEL REGULATOR WITH MECHANICAL LINKAGE

PRESSURE

- PCV — PRESSURE-REDUCING REGULATOR, SELF-CONTAINED
- PCV — PRESSURE-REDUCING REGULATOR WITH EXTERNAL PRESSURE TAP
- PDCV — DIFFERENTIAL-PRESSURE-REDUCING REGULATOR WITH INTERNAL AND EXTERNAL PRESSURE TAPS
- PCV — BACKPRESSURE REGULATOR, SELF-CONTAINED
- PCV — BACKPRESSURE REGULATOR WITH EXTERNAL PRESSURE TAP
- PSV — PRESSURE RELIEF OR SAFETY VALVE, ANGLE PATTERN, SPRING-OR WEIGHT-LOADED, OR WITH INTEGRAL PILOT
- PSV — PRESSURE RELIEF OR SAFETY VALVE, STRAIGHT-THROUGH PATTERN, SPRING-OR WEIGHT-LOADED, OR WITH INTEGRAL PILOT
- PSV — VACUUM RELIEF, ANGLE PATTERN, SPRING-OR WEIGHT-LOADED, OR WITH INTEGRAL PILOT
- S, PS, PSV — PRESSURE RELIEF OR SAFETY VALVE, ANGLE PATTERN, TRIPPED BY INTEGRAL SOLENOID
- PSE — RUPTURE DISK OR SAFETY HEAD FOR PRESSURE RELIEF
- PSE — RUPTURE DISK OR SAFETY HEAD FOR VACUUM RELIEF

TEMPERATURE

- TCV — TEMPERATURE REGULATOR, FILLED SYSTEM TYPE

MISCELLANEOUS

RELAY

- 1:1 IY — 1:1 RELAY (VOLUME BOOSTER)
- IY — HIGH MEASURED VARIABLE SELECTOR IF HIGH SIGNAL SELECTOR ADD (SIGNAL)
- IY — SQUARE ROOT EXTRACTOR

FOR ADDITIONAL EXAMPLES SEE ISA S5-1

- INTERLOCK (1/4")
- PANEL MOUNTED PATCHBOARD OR MATRIX CONNECTION (7/16")
- A — H HIGH, L (LOW) — ALARM
- L — O (OPEN), C (CLOSED) — PILOT LIGHTS
- R - RED, G - GREEN, A - AMBER
- P — INPUT SIGNAL FROM PROGRAMMER

NOTES:

1. THIS DRAWING IS BASED ON THE INSTRUMENT SOCIETY OF AMERICA STANDARD No. S5.1 - 1967
2. TEXT ENTRIES AROUND INSTRUMINT BALLOON
   - J1- INSTRUMENT IDENTIFIER (PREFIX)
   - J2- INSTRUMENT NUMBER INCLUDING (SUFFIX)
   - J3- NUMBER OF REPRESENTATION FOR BALLOONS SHOWN MORE THAN ONCE ON P&ID's.
   - J4- LOCATION
   - J5- FUNCTION (E.G. EZ5)
   - J6- OTHER P&ID LOCATIONS WHERE INSTRUMENT BALLOON IS SHOWN (SEE J3 ABOVE)

NOTE:
THE SYMBOLS SHOWN HERE ARE FOR USE WITH P&ID's M-108 THOUGH M-149 & M-180 THROUGH M-183 ONLY. REFER TO M-179 FOR SYMBOLS AND ABBREVIATIONS USED ON THE HV/AC P&ID's M-150 THOUGH M-178.

DUANE ARNOLD ENERGY CENTER
IES UTILITIES
UPDATED FINAL SAFETY ANALYSIS REPORT

PIPING AND INSTRUMENTATION SYMBOLS

FIGURE 7.1-1 SH. 2

REVISION 12 - 10/95

BECH-M101 REV. 12

FIRST LETTER		SECOND & SUCCEEDING LETTERS																			
		DISPLAY DEVICES							CONTROLLING DEVICES							SENSING DEVICES					
MEASURED VARIABLE	SYMBOL FOR MEASURED VARIABLES	INDICATING	RECORDING	INTEGRATING INDICATOR (See Note 5)	SCAN (See Note 7)	ALARM (See Note 12) LOW	ALARM HIGH	ALARM LOW HIGH	INDICATING	RECORDING	BLIND	CONTROL VALVE	SELF ACTUATED VALVE	FINAL CONTROL ELEMENT (See Note 11)	SWITCH (See Note 6)	PRIMARY ELEMENT	BLIND TRANSMITTER	INDICATING TRANSMITTER	LOCAL OBSERVATION GLASS	TEST CONNECTION	RELAY OR CONVERTER (BLIND)	MONITOR
Typical Symbol	( )	( )I	( )R	( )QI	( )J(	( )AL	( )AH	( )AHL	( )IC	( )RC	( )C	( )V	( )CV	( )Z	( )S( )	( )E	( )T	( )IT	( )G	( )P	( )Y	( )M
Analysis (See Note 1)	A	AI	AR		AJ( )	AAL	AAHL	AAHL	AIC	ARC	AC	AV		AZ	AS( )	AE	AT	AIT		AP	AY	
Burner Flame	B	BI	BR		BJ( )	BAL					BC	BV			BS( )	BE	BT		BG	BP	BY	
Conductivity	C	CI	CR		CJ( )	CAL	CAH	CAHL	CIC	CRC		CV		CZ	CS( )	CE	CT	CIT		CP	CY	
Density	D	DI	DR		DJ( )	DAL	DAH	DAHL	DIC	DRC		DV		DZ	DS( )	DE	DT	DIT		DP	DY	
Voltage (EMF)	E	EI	ER		EJ( )	EAL	EAH	EAHL	EIC	ERC	EC			EZ	ES( )	EE	ET	EIT			EY	
Flow (See Note 10)	F	FI	FR	FQI	FJ( )	FAL	FAH	FAHL	FIC	FRC	FC	FV	FCV	FZ	FS( )	FE	FT	FIT	FG	FP	FY	
Flow Ratio	FF	FFI	FFR		FFJ( )				FFIC	FFRC	FFC	FFV		FFZ								
Gaging (Dimensional)	G	GI	GR		GJ( )	GAL	GAH	GAHL	GIC	GRC	GC	GV		GZ	GS( )	GE	GT	GIT				
Hand	H								HIC		HC	HV	HCV	HZ	HS( )							
Current	I	II	IR	IQI	IJ( )	IAL	IAH	IAHL	IIC	IRC	IC			IZ	IS( )	IE	IT	IIT			IY	
Power	J	JI	JR	JQI	JJ( )	JAL	JAH	JAHL	JIC	JRC	JC			JZ	JS( )	JE	JT	JIT			JY	
Time	K	KI	KR	KQI	KJ( )	KAL	KAH	KAHL	KIC	KRC	KC			KZ	KS( )		KT	KIT			KY	
Level	L	LI	LR		LJ( )	LAL	LAH	LAHL	LIC	LRC	LC	LV	LCV	LZ	LS( )	LE	LT	LIT	LG	LP	LY	
Moisture	M	MI	MR		MJ( )	MAL	MAH	MAHL	MIC	MRC	MC	MV		MZ	MS( )	ME	MT	MIT		MP	MY	
Users Choice (See Note 2)	N																					
Torque	O	OI	OR		OJ( )	OAL	OAH	OAHL	OIC	ORC	OC	OV		OZ	OS( )	OE	OT				OY	
Pressure	P	PI	PR		PJ( )	PAL	PAH	PAHL	PIC	PRC	PC	PV	PCV	PZ	PS( )	PE	PT	PIT		PP	PY	
Pressure Differential	PD	PDI	PDR			PDAL	PDAH	PDAHL	PDIC	PDRC	PDC	PDV	PDCV	PDZ	PDS( )		PDT	PDIT				
Quantity or Event	Q	QI	QR	QQI	QJ( )	QAL	QAH	QAHL	QIC	QRC	QC	QV		QZ	QS( )		QT	QIT			QY	
Radiation	R	RI	RR	RQI	RJ( )	RAL	RAH	RAHL	RIC	RRC	RC			RZ	RS( )	RE	RT	RIT		RP	RY	RM
Speed or Frequency	S	SI	SR	SQI	SJ( )	SAL	SAH	SAHL	SIC	SRC	SC			SZ	SS( )		ST	SIT			SY	
Temperature (SEE NOTE 14)	T	TI	TR		TJ( )	TAL	TAH	TAHL	TIC	TRC	TC	TV	TCV	TZ	TS( )	TE	TT	TIT		TW	TY	
Temperature Differential	TD	TDI	TDR			TDAL	TDAH	TDAHL	TDIC	TDRC	TDC	TDV	TDCV	TDZ	TDS( )	(See Note 8)				(See Note 8)		
Multi-Variable	U	UI	UR		UJ( )	UAL	UAH	UAHL	UIC	URC	UC	UV		UZ	US( )						UY	
Viscosity	V	VI	VR		VJ( )	VAL	VAH	VAHL	VIC	VRC	VC	VV		VZ	VS( )	VE	VT	VIT			VY	
Weight	W	WI	WR	WQI	WJ( )	WAL	WAH	WAHL	WIC	WRC	WC	WV		WZ	WS( )	WE	WT	WIT			WY	
Unclassified (See Note 4)	X	XI	XR		XJ( )	XAL	XAH	XAHL	XIC	XRC	XC	XV		XZ	XS( )	XE	XT	XIT			XY	X( )M
User's Choice (See Note 2)	Y																				YY	XVE
Position	Z	ZI	ZR		ZJ( )	ZAL	ZAH	ZAHL	ZIC	ZRC	ZC			ZZ	ZS( )	ZE	ZT	ZIT			ZY	

NOTES

(1) "A" is used for all analytical variables: For example: O_2, H_2O, CO_2, pH, octane improvement, chromatograph analyzing one or more streams for one or more compounds, boiling point, freezing point, combustibles etc. The chemical formula recognized symbol (such as pH) or a description denoting the function of the analyzer should be noted on the P&ID outside the instrument symbol.

(2) A user's choice letter is intended to cover a meaning that would be used repetitively in a particular project. When used, the letter may have one meaning as a first letter and another meaning as a succeeding letter. The meanings need be defined only once in a legend, or otherwise for that project. For example, the letter "N" may be defined as turbidity as a first letter and television monitor as a second letter. "BN" would be a burner flame television monitor.

(3) The equation of description denoting the function of the relay "Y" should be shown on the P&ID. For example: A=B+C+K, LP selector, volume booster.

(4) "X" is used to represent any "special" variables and may be defined as required. For example: Mass flow recorders which receive a signal from a multiplying relay which combines the product of density and flow. This item is not to be confused with "U" multi-variable symbol.

(5) When "Q" is used as a second or succeeding letter it denotes an integrating modifier. For example: "FQI" is an indicating flow integrator (or totalizer). Note that the integrating function shall be shown with separate identification: For example: FQI/FRS or FR/FQIS.

(6) Startup and shutdown devices are usually blind, but may be indicating or recording. If so, add "I" or "R" after measured variable. For example: FIS, TRS. If the switch performs an on-off control function, replace "S" by "C". For example: "FS" becomes "FC". Switch functions shall be further modified by "L" for low and "H" for high. Suffix 'S' to 'HS' etc. means selecting feature of the switch.

(7) The designation "AJ( )" may denote a scanning analyzer indicator, recorder, transmitter, etc., by using the designation AJI, AJR, AJT, etc., respectively.

(8) "TW" denotes an empty thermowell. "TE" denotes a thermowell with thermocouple or resistance bulb and head suitable for use with a secondary instrument.

(9) Pressure relief valves and rupture disks shall be identified as "PSV" and "PSE" respectively.

(10) "FO" is used to designate a restriction orifice. (INCLUDING SNUBBERS, PULSATION DAMPENERS, ETC.)

(11) For devices other than control valves, such as hydraulic couplings, variable speed drives, etc.

(12) High-high alarms will be designated "( ) AHH" and low-low alarms "( ) ALL". For example: LAHH denotes "high-high level alarm".

(13) LSS is used to indicate level alternator. When applied to two 100% capacity pumps it switches the pump logic to start pumps alternately.

(14) THE LETTER "A" SHALL BE ADDED AS THE THIRD LETTER FOR "AVERAGE" TEMPERATURE INDICATING AND RECORDING. FOR EXAMPLE: TIA WOULD BE AN AVERAGE TEMPERATURE INDICATOR AND TRA WOULD BE AN AVERAGE TEMPERATURE RECORDER.

(15.) XVE = VIBRATION SENSOR

GENERAL NOTES:

(A) All instrument identifications are based upon ISA standard "S5.1 - 1967". For further details refer to ISA standard.

(B) Where special designation is required, pilot lights shall be identified with the particular variable letter, followed by second letter "L".

NOTE:

THE SYMBOLS SHOWN HERE ARE FOR USE WITH P&ID'S M-105 THROUGH M-149 AND M-180 THROUGH M189 ONLY. REFER TO M-179 FOR SYMBOLS AND ABBREVIATIONS USED ON THE HV/AC P&ID'S M-150 THROUGH M-178.

DUANE ARNOLD ENERGY CENTER
IES UTILITIES
UPDATED FINAL SAFETY ANALYSIS REPORT

P & ID, INSTRUMENT IDENTIFICATION

FIGURE 7.1-1 SH. 3

H&V ABBREVIATIONS

1C	(UNIT) 1 CABINET OR RACK
1V	(UNIT) 1 VENT (HVAC PURCH EQUIP)
AD	ACCESS DOOR
ADSD	AIR DUCT SMOKE DETECTOR
AFM	AIRFLOW MONITOR
AO	AIR OPERATOR (VALVE OR DAMPER)
A/S	AIR SUPPLY (INSTRUMENTATION)
ATF	AIRTROL TAIK FITTING (BAG)
AV	AIR (OPERATED) VALVE
BD	BALANCING DAMPER
BDD	BACKDRAFT DAMPER
BS	BASKET STRAINER
COPR	CLOSE ON PRESSURE RISE
COTR	CLOSE ON TEMPERATURE RISE
CS	CENTRIFUGAL SWITCH
CU	CONTROL UNIT (TEMP SENSOR & SW)
CV	CONTROL VALVE
CUM	CUMULATOR
D-XX-X	DAMPER-(CON-PAID REF)-(CH-UNIT NO.)
DM	DAMPER MOTOR (ELECTRIC)
DO	DAMPER OPERATOR (PNEUMATIC)
DAC	DATA ACQUISITION CENTER (SEE NOTE 6)
EC	ELECTRIC HEATER CONTACTOR
E/PC	ELECTRIC (TO) PNEUMATIC CONVERTER
E/S	POWER SUPPLY
FC	FAIL CLOSED ON FLOW CONTROLLER
FD	FIRE DAMPER
FE	FLOW ELEMENT
FI	FLOW INDICATOR OR FAIL INDETERMINATE
FIC	FLOW INDICATING CONTROLLER
FO	FAIL OPEN OR FLOW ORIFICE
FR	FLOW RECORDER
FS	FLOW SWITCH
FT	FLOW TRANSMITTER
(G)	
RAH	HUMIDITY ALARM HIGH
HAL	HUMIDITY ALARM LOW
HC	HUMIDITY CONTROLLER
HIC	HUMIDITY INDICATING CONTROLLER
HLS	HIGH LIMIT SWITCH
HSTP	HIGHER OF TWO PRESSURES
HS	HAND SWITCH
HSATC	HS & TEMPERATURE CONTROLLER
HSATIC	HS & TEMP INDICATING CONTROLLER
HV	HAND VALVE
II	CURRENT INDICATOR (AMMETER)
(J)	
(K)	
LC	LEVEL CONTROL
LG	LEVEL GLASS
LLC	LOW LEVEL CONTROL
LOC	LOCALLY MOUNTED
LOTP	LOWER OF TWO PRESSURES
L/R	LOCKOUT RELAY
LS	LEVEL SWITCH
LTC	LIMIT TEMPERATURE CONTROL
MDS	MECHANICAL DOOR SWITCH
MF	MOLECULAR FILTER
MO	MOTOR OPERATOR
(N)	
OAT	OUTSIDE AIR TEMPERATURE
OCFR	OPEN ON FLOW RISE
OCPR	OPEN ON PRESSURE RISE
OCTR	OPEN ON TEMPERATURE RISE
OPS	OUTSIDE PRESSURE SENSOR
OT	OPERATING THERMOSTAT
PB	PUSHBUTTON
PC	PNEUMATIC CONTROLLER
PCH	PNEUMATIC CONTROLLED HUMIDIFIER
PCV	PRESSURE CONTROL VALVE
PDC	PRESSURE DIFFERENTIAL CONTROLLER
PDI	PRESSURE DIFFERENTIAL INDICATOR
PDIS	PRESSURE DIFFERENTIAL INDICATING SWITCH
PDR	PRESSURE DIFFERENTIAL RECORDER
PDT	PRESSURE DIFFERENTIAL TRANSMITTER
PDT/FI	PRESSURE DIFFERENTIAL TRANSMITTER & FLOW INDICATOR
PDS	PRESSURE DIFFERENTIAL SWITCH
P/EO	PNEUMATIC (TO) ELECTRIC RELAY
P/EO	PNEUMATIC (TO) ELECTRIC SWITCH
P/ET	PNEUMATIC (TO) ELEC TRANSMITTER
PI	PRESSURE INDICATOR
PP	PRESSURE POINT
PR	PRESSURE REGULATOR
P/R	PNEUMATIC REGULATOR
PRV	PRESSURE REGULATING VALVE
PS	PRESSURE SWITCH
PSV	PRESSURE (RELIEF) SAFETY VALVE
PT	PRESSURE TRANSMITTER
PIC	STEP CONTROLLER
(Q)	
RCF	RADIATION COLLECTION FILTER
RCFE	RAD COLLECTION FILTER ELEMENT
RE	RADIATION ELEMENT
RHI	RELATIVE HUMIDITY INDICATOR
RHC	RELATIVE HUMIDITY CONTROL
RHS	RELATIVE HUMIDITY SWITCH
RHT	RELATIVE HUMIDITY TRANSMITTER
RIM	RADIATION INDICATING MONITOR
RO	RESTRICTING ORIFICE
RP	REFERENCE PRESSURE
RR	RADIATION RECORDER
RS	
SL	SIGNAL LIMITER
SP	SET POINT OR STATIC PRESSURE
SQ	SQUARE ROOT (COMPUTER)
ST	STEAM TRAP (TT-FLAT, TB-BUCKET)
SUS	START-UP STRAINER
SV	SOLENOID VALVE
SWGR	(LOCATED ON OR NEAR) SWITCHGEAR
SX	SAMPLE POINT
TC	TEMPERATURE CONTROLLER
TCV	TEMPERATURE CONTROL VALVE
TDI	TEMPERATURE DIFFERENTIAL INDICATOR
TDIC	TEMPERATURE DIFFERENTIAL INDICATING CONTROLLER
TDIS	TEMPERATURE DIFFERENTIAL INDICATING SWITCH
TDR	TEMPERATURE DIFFERENTIAL RECORDER
TDS	TEMPERATURE DIFFERENTIAL SWITCH
TDT	TEMPERATURE DIFFERENTIAL TRANSMITTER
TE	TEMPERATURE ELEMENT
TI	TEMPERATURE INDICATOR
TIC	TEMPERATURE INDICATING CONTROLLER
TR	TEMPERATURE RECORDER
TS	TEMPERATURE SWITCH
TT	TEMPERATURE TRANSMITTER
TX	TEMPERATURE (TESTING) POINT
TAH	TEMPERATURE ALARM-HIGH
TIT	TEMPERATURE INDICATING TRANSMITTER
(U)	
VO	VARIABLE ORIFICE
V-XX-X	VALVE-(CON-PAID REF)-(CH-UNIT NO.)
(W)	
(X)	
YS	IONIZATION DETECTOR
YS	Y- PATTERN STRAINER
ZS	POSITION SWITCH

PIPING SYMBOLS

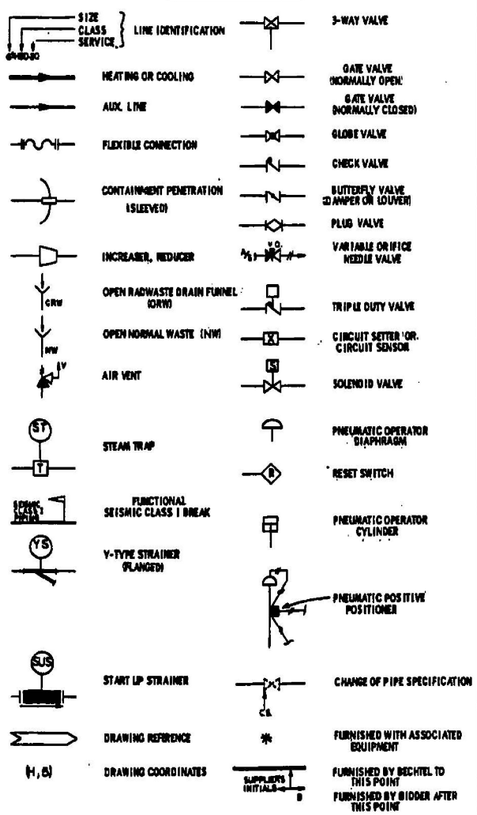

H & V SYMBOLS

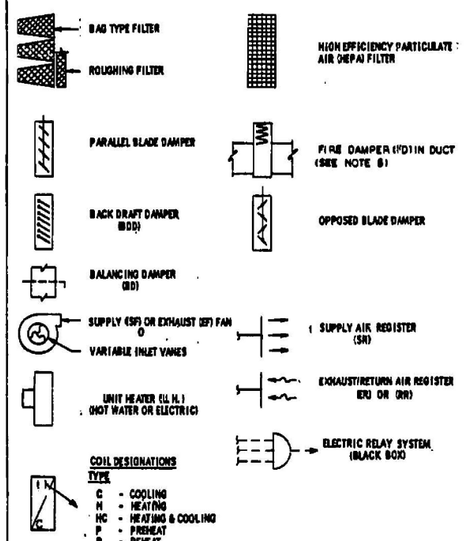

H&V AIRFLOW & P&ID INDEX

M-150	PLANT AIR FLOW DIAGRAM
M-151	CONTROL BLDG. AIR FLOW DIAGRAM
M-152	REACTOR BLDG. AIR FLOW DIAGRAM
M-153	TURBINE BLDG. AIR FLOW DIAGRAM
M-154	RADWASTE BLDG. AIR FLOW DIAGRAM
M-155	ADMINISTRATION BLDG. AIR FLOW DIAGRAM
M-156	DRYWELL AIR FLOW DIAGRAM
M-157	DRYWELL COOLING WATER SYSTEM
M-158	STANDBY GAS TREATMENT SYSTEM
M-159	COOLING WATER & VENTILATION SYSTEM-TURBINE BUILDING
M-160	HEATING SYSTEM-BOILER & MAIN LOOP
M-161	HEATING AND A/C SYSTEM-CONTROL BUILDING
M-162	HEATING SYSTEM-REACTOR BUILDING
M-163	HEATING SYSTEM-TURBINE BUILDING
M-164	HEATING AND A/C SYSTEM RADWASTE BLDG.
M-165	MAIN PLANT AIR INTAKE AND M. G. ROOM
M-166	HEATING AND COOLING SYSTEM-PLANT AIR SUPPLY
M-167	HEATING AND COOLING SYSTEM-ADMINISTRATION BLDG.
M-168	HEATING AND COOLING SYSTEM-ADMINISTRATION BLDG.
M-169	CHILLED AND HEATING WATER SYSTEM-CONTROL BLDG.
M-170	HVAC-MISC. CONTROL SYSTEM
M-171	COOLING WATER SYSTEM-REACTOR BUILDING
M-172	HEATING & COOLING SYSTEM-MACHINE SHOP, OFF-GAS RETENTION BLDG. & R. R. ENTRANCE
M-173	STANDBY FILTER UNIT-CONTROL BUILDING
M-174	DRYWELL FAN SYSTEM
M-175	P&ID & AIR FLOW DIAGRAM PUMP HOUSE
M-176	P&ID REACTOR BLDG. & OFF-GAS STACK VENT SYSTEM
M-177	P&ID INTAKE STRUCTURE, WELL HOUSE COMPRESSOR BLDG., HVV CONTROL DIAGRAM, BREATHING AIR BUILDING
M-178	HVAC-MISC. CONTROL SYSTEM
M-179	H&V SYMBOLS & ABBREVIATIONS
M-180 SHT 1&2	LOW LEVEL RADWASTE PROCESSING AND STORAGE FACILITY H&V

NOTES

1. SYMBOLS SHOWN ON THIS DRAWING ARE TO BE USED WITH DRAWINGS M-150 THROUGH M-178 AND M-188 SHT 1 & 2 ONLY
2. ALL AUTOMATIC H&V VALVES ARE SHOWN IN DE-ENERGIZED OR UNPRESSURIZED CONDITION.
3. FOR ADDITIONAL INSTRUMENT SYMBOLS SEE M-101.
4. CFM'S INDICATING APPROXIMATE AIR FLOW THROUGH UNCONTROLLED OPENINGS (E.G., STAIRWAYS, HATCHES, ETC.) SHOWN IN THE P&ID'S AND LAYOUT DRAWINGS ARE TO BE USED FOR REFERENCE ONLY TO THE TOTAL SYSTEM AIR BALANCE. THE ARROWS DESIGNATE THE DIRECTION OF AIR FLOW.
5. FOR MECH., ELEC AND HVAC DWGS. FOR THE DATA ACQUISITION CENTER, SEE VENDOR PRINTS RGB3-001.
6. FOR CURRENT FIRE DAMPER INFORMATION AND FUNCTIONAL STATUS SEE DRAWINGS BECH-A013(C) AND BECH-A010(B).

DUANE ARNOLD ENERGY CENTER
IES UTILITIES
UPDATED FINAL SAFETY ANALYSIS REPORT

P&ID
HEATING, VENTILATING & AIR CONDITIONING
H&V SYMBOLS AND ABBREVIATIONS

FIGURE 7.1-1 SH. 4

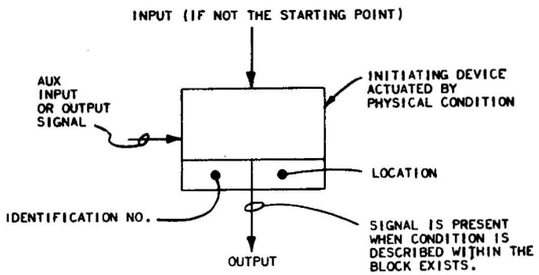

COMMAND BLOCK
THIS BLOCK CAN REPRESENT A SWITCH, VALVE, PROBE, TIMER, OR TRIP CIRCUIT. IT IS NORMALLY THE STARTING POINT OF A FUNCTIONAL SEQUENCE WITH AN OUTPUT ONLY, BUT CAN HAVE INPUT AND AUX. INPUT DEPENDING ON THE TYPE OF DEVICE. THE SAME DEVICE MAY HAVE A NUMBER OF OUTPUTS, BUT EACH FUNCTIONAL SEQUENCE INITIATED SHALL BE SHOWN BY AN INDIVIDUAL BLOCK SHOWING THE SAME IDENTIFICATION NUMBER.

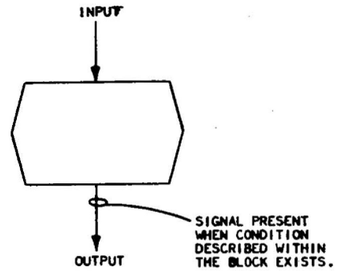

PERMISSIVE CONDITION BLOCK
WHERE THE PERMISSIVE IS A GENERAL CONDITION AND NOT IDENTIFIED WITH A SINGLE DEVICE THE OUTPUTS ENCLOSURE ONLY IS SHOWN

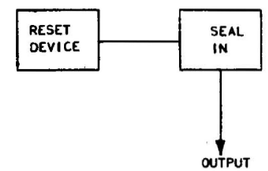

SEAL-IN BLOCK
A SEAL-IN OR LATCHING BLOCK'S FUNCTION IS TO MAINTAIN AN INPUT SIGNAL TO A DEVICE ONCE THE DEVICE HAS BEEN ACTUATED. RESETTING OR INHIBITING A SEAL-IN MAY BE EITHER EXPRESSED OR IMPLIED. IF IMPLIED, THE SEAL-IN WILL BE RESET OR INHIBITED BY INTERRUPTING THE SIGNAL TO THE DEVICE 'DOWNSTREAM' FROM THE POINT WHERE SEAL-IN IS INDICATED. A SEAL-IN SHOWN WITHOUT A RESET DEVICE IMPLIES THAT THE RESET DEVICE IS PART OF, AND LOCATED ON THE NEAREST VALVE OR CONTACTOR. IN ALL OTHER CASES THE RESET DEVICE SHALL BE SHOWN IN CONJUNCTION WITH THE SEAL-IN.

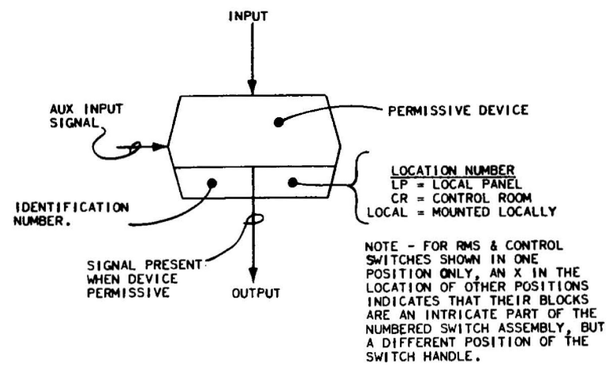

PERMISSIVE DEVICE BLOCK
THIS BLOCK DEFINES A PERMISSIVE FUNCTION WHICH MUST BE SATISFIED TO PERMIT THE SIGNAL FLOW TO PASS TO THE NEXT BLOCK. THIS BLOCK HAS INCOMING, OUTGOING AND MAY HAVE AUXILIARY SIGNALS. THE OUTPUT FROM THIS PERMISSIVE MAY BE SEALED IN.

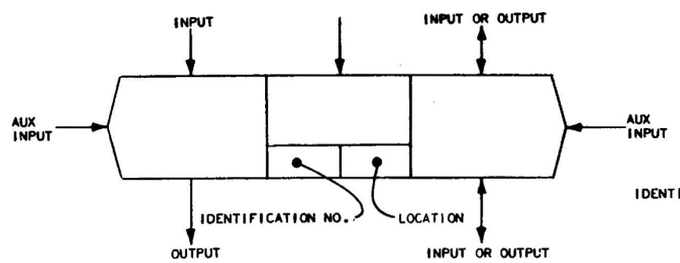

PERMISSIVE OPERATED BY OTHER DEVICES BLOCK
THIS BLOCK IS A PERMISSIVE OPERATED BY DEVICES SUCH AS VALVE OR PUMP SWITCHGEAR DESIGNATED IN THE INNER BLOCK. THIS COND. OR DEVICE EFFECTS THE OPERATION OF THE FINAL DEVICE. IT HAS ELECT. INPUTS, MECH INPUTS, AUX INPUTS (MECH OR ELEC) AND MECH OR ELECT OUTPUTS. THIS DEVICE IS NORMALLY A VALVE. THIS IS ALSO USED FOR OTHER INPUT/OUTPUT POWER SOURCES SUCH AS AIR OR HYDRAULIC. A SOLENOID PILOT VALVE FOR AN AIR OPERATED VALVE IS AN EXAMPLE OF THIS TYPE DEVICE.

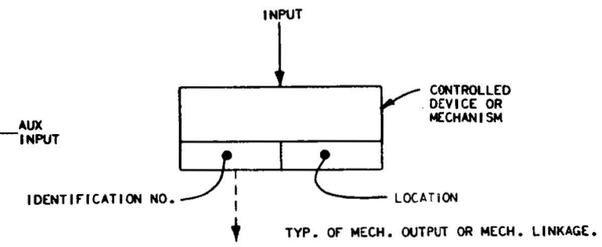

FINAL DEVICE BLOCK
THIS BLOCK CAN BE A RELAY, VALVE, ELECTRO-MECH SW. ETC. NORMALLY IT HAS ONLY INPUTS, BUT CAN HAVE MECH OUTPUTS OR POSITION SWITCH OUTPUTS.

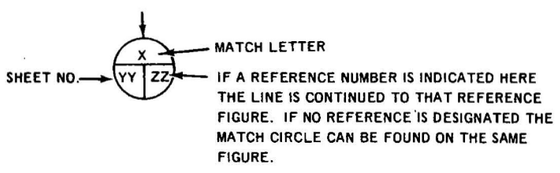

MATCH CIRCLE
THIS CIRCLE DESIGNATES THAT THE LINE CONNECTED TO IT IS CONTINUED TO ANOTHER LOCATION OF THE SAME FIGURE. THE LINE CAN BE FOLLOWED FROM A CIRCLE WITH THE CORRESPONDING MATCH LETTER ON THE DESIGNATED FIGURE SHEET.

LINES ASSOCIATED WITH LOGIC SYMBOLS

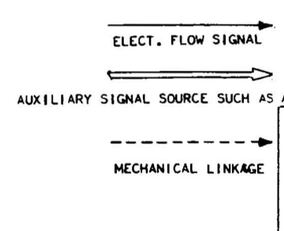

DUANE ARNOLD ENERGY CENTER
IOWA ELECTRIC LIGHT & POWER COMPANY
UPDATED FINAL SAFETY ANALYSIS REPORT

Logic Symbols Used on Functional Control Diagrams

Figure 7.1-2

7.2 REACTOR PROTECTION SYSTEM

7.2.1 DESCRIPTION

7.2.1.1 System Description

7.2.1.1.1 Identification

The reactor protection system (RPS) includes the motor-generator power supplies, sensors, relays, bypass circuitry, and switches that cause rapid insertion of control rods (scram) to shut down the reactor. The RPS is designed to meet the intent of the Institute of Electrical and Electronic Engineers (IEEE) Proposed Criteria for Nuclear Power Plant Protection Systems (IEEE-279). The process computer system and annunciators are not part of the RPS. Although scram signals are received from the neutron monitoring system, this system is treated as a separate nuclear safety system in Section 7.6.1. The ATWS-RPT/ARI System is not considered to be a part of the reactor protection system; it is a back up to that system.

7.2.1.1.2 Power Supply

Power to each of the two reactor protection trip systems is supplied, via a separate bus, by its own high-inertia, flywheel, ac-ac motor-generator set (see Figure 7.2-1, Sheet 1). The inertia is sufficient to maintain voltage and frequency within 5% of rated values for at least 1.0 sec following a total loss of power to the drive motor.

Alternate power is available to either RPS bus from an electric bus that can receive standby electric power. The manual transfer switches prevent simultaneously feeding both buses from the same source. The switches also prevent paralleling a motor-generator set with the alternate supply.

The backup scram valve solenoids receive dc power from the plant batteries.

The DAEC has installed General Electric (GE) designed electrical protection assemblies (GE No. 914El75) to monitor the electric power in each of the three sources of power (RPS M-G sets A and B, and the alternate source) to the RPS. The electrical protection assemblies detect any abnormal output failure of the power sources and after a time-delay trip either one or both of the two Class 1E protective packages. The tripping would interrupt the power to the affected RPS channel, producing a scram signal on that channel, while retaining full-scram capability by means of the other channel. This system provides fully redundant Class 1E protection in conformance with General Design Criterion (GDC) 2, seismic qualification; GDC 21, single-failure criteria; and IEEE-279-1971.

Each pair of electrical protection assemblies consists of two identical and redundant packages that include a circuit breaker and a monitoring module. When abnormal electric power is detected by either module, the respective circuit breaker will trip (after a time delay) and disconnect the RPS from the abnormal power source. The monitoring module detects overvoltage, undervoltage and under frequency conditions and provides the time-delayed trip when a setpoint is exceeded. The maximum time delay will be less than or equal to 3.8 seconds, allowing for an assumed maximum breaker opening time of 0.2 seconds. Consequently, the RPS will be disconnected from the abnormal power supply within 4.0 seconds as allowed by Reference 7. The Technical Specifications provide the setpoints and surveillance and testing requirements.

The electrical protection assemblies have been fully qualified by GE to the following criteria:

Temperature	40 to 137°F
Relative humidity	10 to 95%
Seismic	5.0g operating-basis earthquake
	7.0g design-basis earthquake
	1 to 33 Hz, frequency spectrum

These testing conditions exceed the DAEC requirements. IEEE 323-1974 and 344-1975 were used as testing guidelines.

The electrical protection assemblies input and output power and instrumentation cables are routed independently and in separate conduit or cable trays to meet the divisional requirements of IEEE-384 and Regulatory Guide 1.75. The following separation criteria were used during installation:

Minimum vertical separation	3 ft
Minimum horizontal separation between any two electrical protection assemblies in series with any other series of two electrical protection assemblies	3 ft

7.2.1.1.3 Physical Arrangement

Instrument piping that taps into the reactor vessel is routed through the primary containment wall and terminates inside the secondary containment (reactor building). Reactor vessel pressure and water-level information is sensed from this piping by

instruments mounted on instrument racks in the reactor building. Valve position switches are mounted on valves from which position information is required. The sensors for RPS signals from equipment in the turbine building are mounted locally. The two motor-generator sets that supply power for the RPS are located in an area where they can be serviced during reactor operation. Cables from sensors and power cables are routed to two RPS cabinets in the control room, where the logic circuitry of the system is formed. One cabinet is used for each of the two trip systems. The logics of each trip system are isolated in separate bays in each cabinet. The RPS is designed as Seismic Category I equipment to ensure a safe reactor shutdown during and after seismic disturbances.

7.2.1.1.4 Logic

The basic logic arrangement of the system is illustrated in Figure 7.2-2. Each trip system has three logics, as shown in Figure 7.2-3. Two of the logics are used to produce automatic trip signals. The remaining logic is used for a manual trip signal. Each of the two logics used for automatic rip signals receives input signals from at least one channel for each monitored variable. Thus, two channels are required for each monitored variable to provide independent inputs to the logics of one trip system. At least four channels for each monitored variable are required for the logics of both trip systems.

As shown in Figure 7.2-3, each actuator associated with any one logic provides inputs into each of the actuator logics for the associated trip system. Thus, either of the two automatic logics associated with one trip system can produce a system trip. The logic is a one-out-of-two arrangement. To produce a scram, the actuator logics of both trip systems must be tripped. The overall logic of the RPS could be termed one-out-of-two taken twice.

7.2.1.1.5 Operation

To facilitate the description of the RPS, the two trip systems are called trip system A and trip system B. The automatic logics of trip system A are logics Al and A2; the manual logic of trip system A is logic A3. Similarly, the logics for trip system B are logics Bl, B2, and B3. The actuators associated with any particular logic are identified by the logic identity (such as actuators B2) and a letter (see Figure 7.2-3). Channels are identified by the name of the monitored variable and the logic identity with which the channel is associated (such as reactor vessel high-pressure channel Bl).

During normal operation, all sensor and trip contacts essential to safety are closed; channels, logics, and actuators are energized. However, in contrast, trip bypass channels consist of normally open contact networks, as does the backup scram circuitry.

There is a dual solenoid coil scram pilot valve and two scram valves for each control rod, arranged as shown in Figure 7.2-1, Sheet 1. Each scram pilot valve is

solenoid operated, with the solenoids normally energized. The scram pilot valves control the air supply to the respective scram valves for each control rod. With either scram pilot valve energized, air pressure holds the scram valves closed. The scram valves control the supply and discharge paths for control rod drive (CRD) water. One of the scram pilot solenoids for each control rod is controlled by actuator logics A, the other valve by actuator logics B. There are two dc solenoid-operated backup scram valves that provide a second means of controlling the air supply to the scram valves for all control rods. The dc solenoid for each backup scram valve is normally deenergized. The backup scram valves are energized (initiate scram) when both trip system A and trip system B are tripped.

The functional arrangement of sensors and channels that constitute a single logic is shown in Figure 7.2-1, Sheet 2. A schematic is included as Figure 7.2-2. Whenever a channel sensor contact opens, its sensor relay deenergizes, causing contacts in the logic to open. The opening of contacts in the logic deenergizes its actuators. When deenergized, the actuators open contacts in all the actuator logics for the trip system. This action results in deenergizing the scram pilot valve solenoids associated with that trip system (two scram pilot valve solenoids for each control rod). Unless the other scram pilot valve solenoid for each rod is deenergized, the rods are not scrammed. If a trip then occurs in any of the logics of the other trip system, the remaining scram pilot valve solenoid for each rod is deenergized, venting the air pressure from the scram valves, and allowing CRD water to act on the CRD piston. Thus, all control rods are scrammed. The water displaced by the movement of each rod piston is vented into a scram discharge volume. Figure 7.2-1, Sheet 1, shows that when the solenoid for each backup scram valve is energized, the backup scram valves vent the air supply for the scram valves; this action initiates the insertion of every control rod regardless of the action of the scram pilot valves.

A scram can be manually initiated. There are two scram buttons, one for logic A3 and one for logic B3. Depressing the scram button on the logic A3 deenergizes actuators A3 and opens corresponding contacts in actuator logics A. A single trip system trip is the result. To cause a manual scram, the buttons for both logic A3 and logic B3 must be depressed. The manual scram buttons are close enough to permit one hand motion to cause a scram. By operating the manual scram button for one manual logic at a time, followed by the reset of the logic, each trip system can be tested for manual scram capability. It is also possible for the plant operator to scram the reactor by interrupting power to the RPS by one of five means: keylock channel test switch, panel breaker, distribution box breaker, EPA breakers, or RPS motor-generator set.

To restore the RPS to normal operation following any single trip system trip or scram, the actuators must be manually reset. After a 10-sec delay, reset is possible only if the conditions that caused the scram have been cleared and is accomplished by operating switches in the control room. Figure 7.2-1, Sheet 2, shows the functional arrangement of reset contacts for trip system A.

Whenever an RPS sensor trips, it lights a printed red annunciator window, common to all the channels for that variable, on the reactor control panel in the control room to indicate the out-of-limit variable. Each trip system lights a red annunciator window indicating the trip system that has tripped. An RPS channel trip also sounds an audible alarm that can be silenced by the operator. The annunciator window lights latch in until manually reset; reset is not possible until the condition causing the trip has been cleared. A computer printout identifies each tripped channel; however, the physical positions of RPS relays may also be used to identify the individual sensor that tripped in a group of sensors monitoring the same variable. The location of alarm windows provides the operator with the means to quickly identify the cause of RPS trips and to evaluate the threat to the fuel or nuclear system process barrier.

To provide the operator with the ability to analyze an abnormal transient during which events occur too rapidly for direct operator comprehension, all RPS trips are recorded by an alarm printer controlled by the process computer system (Section 7.7.4.7.2.2). All trip events are recorded. The use of the alarm printer and computer is not required for plant safety, and information provided is in addition to that immediately available from other annunciators and data displays. The printout of trips is particularly useful in routinely verifying the proper operation of pressure, level, and valve position switches as trip points are passed during startups, shutdowns, and maintenance operations.

Reactor protection system inputs to annunciators, recorders, and the computer are arranged so that no malfunction of the annunciating, recording, or computing equipment can functionally disable the RPS. Signals directly from the RPS sensors are not used as inputs to annunciating or data logging equipment. Relay contact isolation is provided between the primary signal and the information output.

7.2.1.1.6 Mode Switch

A conveniently located, multiposition, key-lock mode switch is provided to select the necessary scram functions for various plant conditions. In addition to selecting scram functions from the proper sensors, the mode switch provides appropriate bypasses. The mode switch also interlocks such functions as control rod blocks and refueling equipment restrictions that are not considered here as part of the RPS. The switch itself is designed to provide separation between the two trip systems. The mode switch positions and their related scram functions are as follows:

1. SHUTDOWN - Initiates a reactor scram; bypasses main steam line isolation scram.

2. REFUEL - Selects neutron monitoring system scram for low neutron flux level operation (Section 7.6.1); bypasses main steam line isolation scram.

3. STARTUP - Selects neutron monitoring system scram for low neutron

flux level operation (Section. 7.6.1); bypasses main steam line isolation scram.

4. RUN - Selects neutron monitoring system scram for power range operation (Section 7.6.1).

7.2.1.1.7 Scram Bypass

A number of scram bypasses are provided to account for the varying protection requirements depending on reactor conditions and to allow for instrument service during reactor operations.

Some bypasses are automatic, others are manual. All manual bypass switches are in the main control room, under the direct control of the plant operator. The bypass status of trip system components is continuously indicated in the main control room.

Automatic bypass of the scram trips from main steam line isolation is provided when the mode switch is not in RUN.

The bypass allows reactor operations at low power with the main steam lines isolated. This condition exists during certain reactivity tests during refueling; additionally, it is an available but seldom-used method of reactor startup.

The scram initiated by placing the mode switch in SHUTDOWN is automatically bypassed after a time delay of 2 sec. The bypass is provided to restore the CRD hydraulic system valve lineup to normal. An annunciator in the main control room indicates the bypassed condition. An automatic bypass of the turbine control valve fast-closure scram and turbine stop valve closure scram is effected whenever the turbine first-stage pressure is less than a preset fraction of rated pressure corresponding to approximately 26% of rated core power. The closure of these valves from such a low initial power level does not constitute a threat to the integrity of any barrier or to the release of radioactive material. Bypasses for the neutron monitoring system channels are described in Section 7.6.1. A manual key-lock switch located in the control room permits the operator to bypass the scram discharge volume high-level scram trip if the mode switch is in SHUTDOWN or REFUEL. This bypass allows the operator to reset the RPS so that the system is restored to operation while the operator drains the scram discharge volume. In addition to allowing the scram relays to be reset, actuating the bypass initiates a control rod block. Resetting the trip actuators opens the scram discharge volume vent and drain valves. An annunciator in the main control room indicates the bypass condition.

The following overrides are used in support of the Emergency Operating Procedures (EOPS) in lieu of jumpers and lifted leads.

1. RPS Auto Scram Logic Trip Defeats.

Four (4) key-lock switches are installed; one for each automatic channel of RPS (Al, A2, Bl & B2). Each switch has an associated amber light and individually annunciates on front panel 1C-14 when taken to override. In addition, a separate amber light illuminates on panel 1C-05 when each switch is taken to override. These defeat switches permit the operator to reset a scram under conditions when the reactor is not fully shutdown (ATWS), but existing scram signals (such as high drywell pressure) continue to generate an automatic scram signal.

The locking brass handle switches are unique from others at DAEC and are only used for override functions associated with the EOPS. These switches are similar to other brass handled keylock switches, but have a longer handle and are keyed differently. This provides additional administrative controls over their use. The switch action of this model is a two-position key switch with the key being removable only in the left (counterclockwise) position. The override function is enabled only in the right (clockwise) position. Therefore, the key cannot be removed from the switch while the switch is in the override position, which enhances the administrative control aspects of the override feature. All keys required for deliberate override of safety systems are under the direct control of the Control Room Supervisor.

7.2.1.1.8 Wiring

Wiring and cables are selected to avoid excessive deterioration due to temperature and humidity during the design life of the plant. Cables and connectors used inside the primary containment are designed for continuous operation at an ambient temperature of 150°F and a relative humidity of 99%. Additional information on environmental qualification of cables and wiring can be found in Section 3.11.3.

Cables required to carry low-level signal currents of less than 1mA or voltages of less than 100 mV are designed and installed to eliminate, insofar as practical, electrostatic and electromagnetic pickup from power cables and other ac or dc fields; ferromagnetic conduits or totally enclosed ferromagnetic trays are used.

Low-level signal cables are routed separately from all power cables with a minimum separation of 3ft. Where the low-level signal cable runs at right angles to a power cable, a separation distance of less than 3ft may be used, based on the probable noise pickup relative to the allowable signal-to-noise ratio.

Wiring for the RPS outside of the enclosures in the control room is run in rigid metallic conduits used for no other wiring.

The wires from duplicate sensors on a common process tap are run in separate conduits. Wires for sensors of different variables in the same RPS trip logic may be run in the same conduit.

The scram pilot valve solenoids are powered from eight trip actuator logic circuits: four circuits from trip system A and four from trip system B. The four circuits associated with any one trip system are run in separate conduits. One trip actuator logic circuit from each trip system may be run in the same conduit; wiring for two solenoids on the same control rod may be run in the same conduit.

Electrical panels, junction boxes, and components of the RPS are prominently identified by nameplate. Circuits entering junction boxes or pull boxes are conspicuously marked inside the boxes. Wiring and cabling outside cabinets and panels are identified by color, tag, or other conspicuous means.

7.2.1.2 Design-Basis Information

7.2.1.2.1 Safety Objective

The RPS provides timely protection against the onset and consequences of conditions that threaten the integrity of the fuel barriers (uranium dioxide sealed in cladding) and the nuclear system process barrier. Excessive temperature threatens to perforate the cladding or melt the uranium dioxide. Excessive pressure threatens to rupture the nuclear system process barrier. The RPS acts to limit the uncontrolled release of radioactive material from the fuel and nuclear system process barrier by terminating excessive temperature and pressure increases through the initiation of an automatic scram.

7.2.1.2.2 Safety Design Bases

1. The RPS initiates with precision and reliability a reactor scram in time to prevent fuel damage following abnormal operational transients.

2. The RPS initiates with precision and reliability a scram in time to prevent damage to the nuclear system process barrier as a result of reactor pressure. Specifically, the RPS initiates a reactor scram in time to prevent nuclear system pressure when augmented by safety relief valves from exceeding the nuclear system pressure allowed by applicable industry codes.

3. To limit the uncontrolled release of radioactive materials from the nuclear system process barrier, the RPS initiates with precision and reliability a reactor scram upon gross failure.

4. To provide assurance that conditions which threaten the fuel or nuclear system process barriers are detected with sufficient timeliness and precision, RPS inputs are derived, to the extent feasible and practicable, from variables that are true, direct measures of operational conditions.

5. To provide assurance that important variables are monitored with precision, the RPS responds correctly to the sensed variables over the expected range of magnitudes and rates of change.

6. To provide assurance that important variables are monitored with precision, an adequate number of sensors are provided for monitoring essential variables that have spatial dependence.

7. The following bases provide assurance that the RPS is designed with sufficient reliability:

    a. No single failure within the RPS prevents proper action of the RPS.

    b. Any one intentional bypass, maintenance operation, calibration operation, or test to verify operational availability will not impair the ability of the RPS to respond correctly.

    c. The system is designed for a high probability that when the required number of sensors for any monitored variable exceed the scram setpoint, the event will result in an automatic scram and will not impair the ability of the system to scram as other monitored variables exceed their scram trip points.

    d. Where a plant condition that requires a reactor scram can be brought on by failure, or malfunction of a control or regulating system, and the same failure or malfunction prevents action by one or more RPS channels designed to provide protection against the unsafe condition, the remaining portions of the RPS will meet the requirements of safety design bases 1, 2, 3, and 7a above.

    e. The power supply for the RPS is arranged so that the loss of one supply neither causes nor prevents a reactor scram.

    f. The system is designed so that once initiated an RPS action goes to completion. Return to normal operation after protection system action requires deliberate operator action.

g. There is sufficient electrical and physical separation between channels and between logics monitoring the same variable to prevent environmental factors, electrical transients, and physical events from impairing the ability of the system to respond correctly.

h. Earthquake ground motions will not impair the ability of the RPS to initiate a reactor scram.

8. The following bases are specified to reduce the probability that RPS operational reliability and precision will be degraded by operator error:

   a. Access to all trip settings, component calibration controls, test points, and other terminal points for equipment associated with essential monitored variables will be under the control of plant operations personnel.

   b. The means for manually bypassing logics, channels, or system components will be under the control of the plant operator. If the ability to trip some essential part of the system has been bypassed, this fact will be continuously annunciated in the main control room.

9. To provide the operator with means independent of the automatic scram functions to counteract conditions that threaten the fuel or nuclear system process barrier, it is possible for the plant operator to manually initiate a reactor scram.

10. The following bases are specified to provide the operator with the means to assess the condition of the RPS and to identify conditions that threaten the integrities of the fuel or nuclear system process barrier:

    a. The RPS is designed to provide the operator with information pertinent to the operational status of the protection system.

    b. Means are provided for prompt identification of channel and trip system responses.

11. It is possible to check the operational availability of each channel and logic.

12. In addition to safety design bases 1 through 11 above, the RPS conforms to IEEE-279-1971 (except Section 4.17). In case of conflict, IEEE-279 shall prevail.

7.2.1.2.3 Scram Functions and Trip Settings

The following discussion covers the functional considerations for the variables or conditions monitored by the RPS. Table 7.2-1 lists the specifications for instruments providing signals for the system. Figure 7.2-1, Sheet 2, shows the scram functions in block form.

Neutron Monitoring System Trip

To provide protection for the fuel against high heat generation rates, neutron flux is monitored and used to initiate a reactor scram. The neutron monitoring system setpoints and their bases are discussed in Section 7.6.1.

Figure 7.2-4 clarifies the relationship between neutron monitoring system channels, neutron monitoring system logics, and the RPS logics. The neutron monitoring system channels and logics are considered part of the neutron monitoring system. As shown in Figure 7.2-5, there are four neutron monitoring system logics associated with each trip system of the RPS. Each RPS logic receives inputs from two neutron monitoring system logics.

Each neutron monitoring system logic receives signals from one IRM channel and one APRM channel. The position of the mode switch determines which input signals will affect the output signal from the logic. The arrangement of neutron monitoring system logics is such that the failure of any one logic cannot prevent the initiation of a high neutron flux scram.

Nuclear System High Pressure

High pressure within the nuclear system poses a direct threat of rupture to the nuclear system process barrier. A nuclear system pressure increase while the reactor is operating compresses the steam voids and results in a positive reactivity insertion causing increased core heat generation that could lead to fuel failure and system overpressurization. A scram counteracts a pressure increase by quickly reducing the core fission heat generation.

The nuclear system high-pressure scram setting is chosen slightly above the reactor vessel maximum normal operating pressure to permit normal operation without spurious scrams yet provide a wide margin to the maximum allowable nuclear system pressure. The location of the pressure measurement, as compared to the location of the highest nuclear system pressure during transients, was also considered in the selection of the high-pressure scram setting. The nuclear system high-pressure scram works in conjunction with the pressure relief system in preventing nuclear system pressure from exceeding the maximum allowable pressure. This same nuclear system high-pressure scram setting also protects the core from exceeding thermal-hydraulic limits as a result of pressure increases for some events that occur when the reactor is operating at less than rated power and flow.

Reactor pressure is measured at two locations. An instrument sensing line from each location is routed through the primary containment and terminates at six local instrument racks (three per line) in the reactor building. One locally mounted, pressure transmitter that monitors reactor pressure is mounted on each of four racks that physically separated from each other. Each pressure transmitter provides a signal to an electronic alarm unit that is locally mounted near their respective transmitters. The alarm units are also physically separated from each other. The alarm units provide relay contact outputs to the control room RPS cabinets. Each transmitter/alarm unit provides a high pressure signal to one trip logic. The transmitters/alarm units are arranged so that one pair provides an input to trip system A and the other to trip system B, as shown in Figure 7.2-6.

Reactor Vessel Low Water Level

Low water level in the reactor vessel indicates that the reactor is in danger of being inadequately cooled. One effect of a decreasing water level while the reactor is operating at power is to decrease the reactor coolant inlet subcooling. The effect is the same as raising feedwater temperature. Should water level decrease too far, fuel damage could result as steam forms around fuel rods. A reactor scram protects the fuel by reducing the fission heat generation within the core.

During normal operation the reactor vessel low-water level trip protects the main turbine from excessive moisture carryover prior to steam dryer skirt uncovery and prevents excessive steam carryunder, which can impact reactor recirculation pump and jet pump Net Positive Suction Head (NPSH). This is an equipment protection function and not a safety function.

The reactor vessel low-water-level scram setting was selected to prevent fuel damage following those abnormal operational transients caused by single equipment malfunctions or single operator errors that result in a decreasing reactor vessel water level. Specifically, the scram setting is chosen far enough below normal operational levels to avoid spurious scrams but high enough above the top of the active fuel to ensure that enough water is available to account for steam formation and displacement of coolant following the most severe abnormal operational transient involving a level decrease (Reference UFSAR 15.1.7). The selected scram setting was used in the development of thermal-hydraulic operating limits.

For the design basis accidents, which place the most-strigent requirements on systems, structures, and components (SSCs) of any event category, the reactor vessel low-water trip (Scram) stops the fission process to keep fuel heat-up within regulatory limits (10 CFR 50.46).

Reactor vessel low-water-level signals are initiated from level-indicating type differential-pressure switches that sense the difference between the pressure due to a reference column of water and the pressure due to the actual water level in the vessel. The switches are arranged in pairs in the same way as the nuclear system high-pressure switches (Figure 7.2-6). Two instrument lines attached to taps, one above and one below

the water level, on the reactor vessel are required for the differential-pressure measurement for each pair of switches. The two pairs of lines terminate outside the primary containment and inside the reactor building at two pairs of instrument racks; the rack pairs are physically separated from each other and the lines tap off the reactor vessel at widely separated points. The RPS pressure switches, as well as instruments for other systems, sense pressure and level from these same lines.

Turbine Stop Valve Closure

The closure of the turbine stop valve with the reactor at power can result in a significant addition of positive reactivity to the core as the nuclear system pressure rise collapses steam voids. The turbine stop valve closure scram, which initiates a scram earlier than either the neutron monitoring system or nuclear system high pressure, provides a satisfactory margin below core thermal-hydraulic limits for this category of abnormal operational transients. The scram counteracts the addition of positive reactivity due to pressure by inserting negative reactivity with the control rods.

Although the nuclear system high-pressure scram, in conjunction with the pressure relief system, is adequate to preclude overpressurizing the nuclear system, the turbine stop valve closure scram provides additional margin to the nuclear system pressure limit.

The turbine stop valve characteristics used in the transient analysis (Chapter 15) are given in Figure 7.2-7.

The reactor scram initiated by the turbine stop valve closure is backed up by a second scram signal initiated by reactor pressure which increases to the relief valve trip pressure.

The relief valve opening provides a path for rejection of heat to the torus so that the system is protected against the sudden loss of the condenser as a heat sink.

The redundant instrumentation for trip together with redundant means of scramming the reactor and the redundant heat sink provides the system with a high degree of inherent reliability.

The turbine stop valve closure scram setting is selected to provide the earliest positive indication of valve closure.

Turbine stop valve closure inputs to the RPS are from valve stem position switches mounted on the four turbine stop valves. Each of the double-pole, single-throw switches is arranged to open before the valve is more than 10% closed to provide an early positive indication of closure. As shown in Figure 7.2-8, the logic is arranged so that the closure of three or more valves initiates a scram.

The limit switch configuration on the turbine stop valves that provides the RPS trip to scram the reactor upon closure of the turbine stop valves (loss of heat sink) meets IEEE-279-1971 requirements.

Four turbine first-stage pressure switches are provided to initiate the automatic bypass of the turbine control valve fast-closure and turbine stop valve closure scrams when the first-stage pressure nominal trip setpoint is at or below 120.3 psig (without head correction), corresponding to approximately 26% of rated core power.

Turbine Control Valve Fast Closure (Loss of Control Oil Pressure Scram)

With the reactor and turbine-generator at power, fast closure of the turbine control valves can result in a significant addition of positive reactivity to the core as nuclear system pressure rises. The turbine control valve fast-closure scram, which initiates a scram earlier than either the neutron monitoring system or nuclear system high pressure, provides a satisfactory margin to core thermal-hydraulic limits for this category of abnormal operational transients. The scram counteracts the addition of positive reactivity due to pressure by inserting negative reactivity with the control rods. Although the nuclear system high-pressure scram, in conjunction with the pressure relief system, is adequate to preclude overpressurizing the nuclear system, the turbine control valve fast-closure scram provides additional margin to the nuclear system pressure limit. The turbine control valve fast-closure scram setting is selected to provide timely indication of control valve fast closure.

Turbine control valve fast-closure inputs to the RPS are from four control oil pressure switches located on the control valve operator hydraulic lines. The pressure switches sense a loss of hydraulic pressure to the control valve operators on control valve fast closure.

Turbine control valve fast closure scram initiates a trip within 30 msec of the start of turbine control valve fast closure. The turbine control valve fast-closure scram is bypassed when turbine first-stage pressure nominal trip setpoint is 120.3 psig (without head correction), corresponding to approximately 26% of rated core power.

Main Steam Line Isolation

The main steam line isolation valve closure scram is provided to limit the release of fission products from the nuclear system. Automatic closure of the main steam line isolation valves is initiated upon conditions indicative of a steam-line break. Immediate shutdown of the reactor is appropriate in such a situation.

The main steam line isolation scram setting is selected to give the earliest positive indication of isolation valve closure. This logic allows functional testing of main steam line isolation trip channels with one steam line isolated.

Main steam line isolation valve closure inputs to the RPS are from valve stem position switches mounted on the eight main steam line isolation valves. Each of the double-pole, single-throw switches is arranged to open before the valve is more than 10% closed to provide the earliest positive indication of closure. Either of the two trip channels associated with one isolation valve can signal valve closure. To facilitate the description

of the logic arrangement, the position sensing channels for each valve are identified and assigned to RPS logics as shown in Table 7.2-2.

Each RPS trip system logic receives signals from the valves associated with two steam lines (Figure 7.2-9). The arrangement of signals within each logic requires that at least one valve in each of the steam lines associated with that logic closes to cause a trip of that logic. For example, the closure of the inboard valve of steam line A and the outboard valve of steam line C causes a trip of logic Bl. This in turn causes trip system B to trip. No scram occurs because no trips occur in trip system A. In no case does the closure of two valves or the isolation of two steam lines cause a scram due to valve closure; a scram may result from exceeding the main steam line high differential flow setpoint in the lines that remain open. However, the closure of one valve in each of three or four of the steam lines causes a scram.

Wiring for the position sensing channels from one position switch is physically separated in the same way that wiring to duplicate sensors on a common process tap is separated. The wiring for position sensing channels feeding the different logics of one trip system are also separated.

The main steam line isolation valve closure scram function is effective when the reactor mode switch is in RUN.

The effects of the logic arrangement and separation provided for the main steam line isolation valve closure scram are as follows:

1. Closure of one valve for test purposes with one steam line already isolated without causing a scram due to valve closure.

2. Automatic scram on isolation of three or four steam lines.

3. No single failure can prevent an automatic scram required for fuel protection due to main steam line isolation valve closure.

Scram Discharge Volume High Water Level

The scram discharge volume receives the water displaced by the motion of the CRD pistons during a scram. Should the scram discharge volume fill up with water to the point where not enough space remains for the water displaced during a scram, control rod movement would be hindered in the event a scram were required. To prevent this situation, the reactor is scrammed when the water level in the discharge volume attains a value high enough to verify that the volume is filling up, yet low enough to ensure that the remaining capacity in the volume can accommodate a scram.

Scram discharge volume high water level inputs to the RPS are from four nonindicating Magnetrol float switches and four thermally actuated liquid level switches. The level sensors, which employ different operating principles, perform identical but redundant functions. Each pair of redundant switches provides an input into one channel (Figure 7.2-6). The switches are arranged in pairs so that no single event will prevent a reactor scram due to scram discharge volume high water level. The trip point for these switches cannot be significantly adjusted without physically cutting the switch out of the scram discharge volume and rewelding it at a different level. With the scram setting as listed in Table 7.2-1, a scram is initiated when sufficient capacity remains to accommodate a scram. Both the amount of water discharged and the volume of air trapped above the free surface during a scram were considered in selecting the trip setting.

In addition to the scram-function-level switches, there are two float-type switches on the south and two thermally-actuated-type switches on the north scram discharge volume instrument volumes. These level switches provide redundant functions of "alarm" and "block rod withdrawal." The design provides computer logging of the status of all scram discharge volume level switches.

Primary Containment High Pressure

High pressure inside the primary containment could indicate a break in the nuclear system process barrier. It is prudent to scram the reactor in such a situation to minimize the possibility of fuel damage and to reduce the addition of energy from the core to the coolant.

The primary containment high-pressure scram setting is selected to be as low as possible without inducing spurious scrams. Primary containment pressure is monitored by four nonindicating pressure switches that are mounted on instrument racks outside the drywell in the reactor building. A cable is routed from each switch to the control room. Each switch provides an input to one channel (Figure 7.2-6). Instrument lines that terminate in the secondary containment (reactor building) at the racks connect the switches with the drywell interior. The switches are grouped in pairs, physically separated, and electrically connected to the RPS so that no single event will prevent a scram due to primary containment high pressure.

Main Steam Line High Radiation

High radiation in the vicinity of the main steam lines could indicate a gross fuel failure in the core. When high radiation is detected near the steam lines, an alarm is actuated in the main control room and the mechanical vacuum pump is tripped. The trip of the mechanical vacuum pump in turn closes its suction valve from the low pressure and high pressure condenser. The main steam line drain valves and recirculation loop sample valves also close on high radiation. More information on the trip setting is available in Section 11.5.

Main steam line radiation is monitored by four radiation monitors, which are discussed and evaluated in Section 11.5.1.

Manual Scram

To provide the operator with means to shut down the reactor, push buttons are located in the main control room that initiate a scram when actuated by the operator. In addition, keylock channel test switches are located at relay logic panels.

Mode Switch in SHUTDOWN

The mode switch provides appropriate protective functions for the condition in which the reactor is to be operated. The reactor is SHUTDOWN with all control rods inserted when the mode switch is in SHUTDOWN. To enforce the condition defined for the SHUTDOWN position, placing the mode switch in the SHUTDOWN position initiates a reactor scram. This scram is not considered a protective function because it is not required to protect the fuel or nuclear system process barrier, and it bears no relationship to minimizing the release of radioactive material from any barrier. The scram signal is removed after a short time delay, permitting a scram reset to restore the normal valve lineup in the CRD hydraulic system.

End-of-Cycle Recirculation Pump Trip

The end-of-cycle recirculation pump trip (EOC-RPT) is part of the RPS and is an essential supplement to the reactor scram function. The EOC-RPT feature is installed to improve the thermal margin of a BWR near the end of each fuel cycle by reducing the severity of possible pressurization transients. The RPT system accomplishes this objective by rapidly cutting off power to the recirculation pump motors during generator load rejection (turbine control valve fast closure) or turbine trip (stop valve closure). This results in a rapid reduction in recirculation flow and increases the core void content during a pressurization transient, thereby reducing the peak transient power and heat flux. The operation of the EOC-RPT system reduces the change in reactor critical power ratio (ΔCPR) that would be produced by a pressurization transient. It should be noted that the EOC-RPT is not related to the recirculation pump trip that is associated with an anticipated transient without scram (ATWS-RPT).

The design philosophy for the RPT system is described in General Electric NEDO-24220,[1] DAEC. The RPT system complies with IEEE-279-1971 except for Section 4.17 which covers manual trip feature and is discussed in Section 3.0 of NEDO-24220.

The EOC-RPT is required to quickly shut down both reactor coolant recirculation pumps when the closure of all four turbine stop valves occurs, or when the fast closure of all four turbine control valves occurs. An EOC-RPT trip may occur, but is not required, when one turbine stop valve or one turbine control valve remains open. To mitigate pressurization transient effects, the EOC-RPT must shut down the recirculation pumps within 175 msec after initial closure movement of either turbine stop valves or the turbine control valves, as specified in the Technical Specifications. The Turbine Control Valve Fast Closure Response Time is ≤ 140 msec. the Turbine Stop Valve Closure Response time is ≤ 120 msec. The EOC-RPT installation is composed of sensors that detect the closure of the turbine stop valves or the fast closure of the turbine control valves combined with relays, logic circuits, and fast-acting circuit breakers that interrupt the current from the recirculation pump motor-generator sets to the recirculation pump motors. When the redundant RPT breakers trip open, the recirculation pumps coast down under their own inertia. To satisfy the RPS single-failure criterion, the EOC-RPT has two almost identical divisions that actuate recirculation pump trip in a one-out-of-two configuration. Either of the two RPT divisions operates independent breakers in the supply circuits of both recirculation pumps.

Turbine stop valve closure is detected by four position switches that open when the associated stop valves are less than 90% open. Turbine control valve fast closure is detected by four pressure switches in the hydraulic control system for the valves.

The pressure switches open when the hydraulic control fluid pressure decreases below the trip level. The stop valve position sensors and the control valve hydraulic pressure sensors for recirculation pump trip are the same ones used in the reactor scram system to initiate scram when turbine stop valve closure or turbine control valve fast closure occurs.

The actuation of any RPT sensor causes an associated electromagnetic relay to deenergize. The contacts of these relays are combined in logic circuits with contacts from an operating bypass and contacts from a key-controlled manual bypass switch. The logic circuits control the voltage to the trip circuits of the RPT circuit breakers. The operating bypass disables the RPT system when turbine first-stage pressure is less than that for 26% reactor power. The same operating bypass concurrently disables the turbine inputs to the scram system. A manual bypass switch allows each RPT division to be disabled and placed out of service for maintenance or testing. The functional arrangement of sensors for each logic channel is shown in Figure 7.2-1, Sheet 2A.

There is one interconnection between each EOC-RPT division and a nonsafety system. When each RPT breaker trips, auxiliary relay contacts in the RPT breaker actuate a control circuit for the recirculation pump motor-generator set to deenergize the motor-generator set after the RPT breaker interrupts the current from that set to the recirculation pump motor. This interlock is adequately isolated so that no credible failure can prevent proper RPT action.

An operating bypass automatically disables the RPT system when the reactor is operating at less than 26% power. The operating bypass is annunciated automatically in the control room.

Each RPT division can be bypassed manually by use of an out-of-service key switch that is administratively controlled. The use of the out-of-service key switch bypass produces a suitable annunciator indication in the control room when the keyswitch is turned to the “RPT SYS INOP" position.

The Technical Specifications for the DAEC provide suitable restrictions to limit operating power when one or both of the EOC-RPT divisions are inoperable, and specify periodic functional checks of the initiating logic and scram logic.

7.2.1.2.4 Design Criteria

At the time of the initial FSAR, a comprehensive comparison of the RPS with the design requirements of IEEE-279-1968 had been assembled into topical report, NEDO-10139.[2] The results of this analysis showed that the BWR RPS, which would produce protective actions during and after a postulated reactor loss-of-coolant accident (LOCA) would meet the design requirements of IEEE-279-1968.

The topical report illustrated the basis for the analysis and presented the designer's interpretation of the IEEE-279-1968 design requirements in those cases where an exact fit of the requirements to the intended protective function was not achieved. The design of the DAEC reactor, however, was performed prior to the issue and effective date of the IEEE-279-1971 and was thus adequate to meet the then-effective IEEE-279-1968.

Changes in the DAEC reactor trip and engineered safety feature control systems were designed to IEEE-279-1971 and the General Design Criteria requirements of circuit separation, circuit testability, and tolerance of single failure. With the above changes, the protective systems that activate reactor trip, engineered safety feature action, and other safety-related systems adequately conformed to the criteria of IEEE-279-1971 and the NRC's General Design Criteria, with the exception of Section 4.17 of IEEE-279-1971, as follows:

1. This criterion is not met literally in that protective actions are not initiated at a system level using a minimum of equipment. It is believed that these two requirements are contradictory and practically unattainable because equipment added to obtain an initiation at the system level would clearly be in addition to the minimum needed to obtain operation manually. The scram system that uses two manual initiation buttons in order to obtain separation and testability is clearly more reliable than it would be if a single button were used, but this is a literal violation of Section 4.17 of IEEE-279-1971.

2. The automatic depressurization system uses one manual switch for each of the four relief valves. A single device to control all four valves would raise a question of whether a single failure in this control circuit allowing all valves to open would be an acceptable alternative.

3. The manual control of isolation valves has been specially designed to give excellent operator information regarding status and has controls grouped in such a way that one man can shut off all isolation valves in seconds. This is considered as fulfilling the intent of Section 4.17 of IEEE-279-1971, but is in literal violation.

4. The core cooling manual control has been grouped to facilitate rapid operator action but does not initiate core cooling by a single operator action as implied by Section 4.17 of IEEE-279-1971. Thus, these various systems may be judged to comply with Section 4.17 by reasonable interpretation or to violate Section 4.17 literally as the reviewer may choose to judge.

The protection systems that activate reactor trip and engineered safety feature action as related to the General Design Criteria for Nuclear Power Plants, 10 CFR 50.34, Appendix A, effective July 1971, are discussed in detail under group III of Section 3.1.

7.2.1.3 Inspection and Testing

The RPS can be tested during reactor operation by five separate tests. The first of these is the manual trip actuator test. By depressing the manual scram button for one trip system, the manual logic actuators are deenergized, opening contacts in the trip actuator logics. After resetting the first trip system, the second system is tripped with the other manual scram button. The total test verifies the ability to deenergize all eight groups of scram pilot valve solenoids by using the manual scram push-button switches. Scram group indicator lights verify that the actuator contacts have opened.

The second test is the automatic actuator test, which is accomplished by operating, one at a time, the key-locked test switches for each automatic logic. The switch deenergizes the actuators for that logic, causing the associated actuator contacts to open. The test verifies the ability of each logic to deenergize the actuator logics associated with parent trip system. The actuator and contact action can be verified by observing the physical position of these devices.

The third test includes the calibration of the neutron monitoring system by means of simulated inputs from calibration signal units. Section 7.6.1 describes the calibration procedure.

The fourth test is the single-rod scram test that verifies the capability of each rod to scram. It is accomplished by the operation of toggle switches on the protection system operations panel. Timing traces can be made for each rod scrammed. Before the test, a physics review must be conducted to ensure that the rod pattern during scram testing does not create a rod of excessive reactivity worth.

The fifth test involves applying a test signal to each RPS channel in turn and observing that a logic trip results. This test also verifies the electrical independence of the channel circuitry. The test signals can be applied to the process-type sensing instruments (pressure and differential pressure) through calibration taps.

There are only two dc solenoid-operated backup scram valves, either of which can control the air to all scram valves for all control rods. Thus, the backup scram valves cannot be tested during reactor operation without tripping the reactor. The backup scram valves are tested during each refueling outage.

RPS response times were first verified during preoperational testing and may be verified thereafter by a similar test. The elapsed times from a sensor trip to each of the following events are measured:

1. Channel relay deenergized.

2. Trip actuators deenergized.

Surveillance requirements for the reactor protection system are specified in the Technical Specifications.

The Reactor Vessel Steam Dome Pressure-High Sensor Response time shall be < 0.5 seconds and the Reactor Trip System Response Time shall be ≤ 0.55 seconds.

The Reactor Water Level-Low Sensor Response time shall be < 1.0 seconds and the Reactor Trip System Response time shall be ≤ 1.05 seconds.

The designed system response times from the opening of the sensor contact up to and including the opening of the trip actuator contacts shall not exceed 50 milliseconds.

The alarm printer provided with the process computer verifies the proper operation of many sensors during plant startups and shutdowns. Main steam line isolation valve position switches and turbine stop valve position switches can be checked in this manner. The verification provided by the alarm printer is not considered in the selection of test and calibration frequencies and is not required for plant safety.

7.2.2 ANALYSIS

The RPS is designed to provide timely protection against the onset and consequences of conditions that threaten the integrity of the fuel barrier and the nuclear system process barrier. Chapter 15 identifies and evaluates events that challenge the fuel barrier and nuclear system process barrier. The methods of assessing barrier damage and radioactive material releases, along with the methods by which abnormal events are sought and identified, are presented in that chapter.

Design procedures have been to select tentative scram trip settings that are far enough above or below normal operating levels that spurious scrams and operating inconvenience are avoided; it is then verified by analysis that the reactor fuel and nuclear system process barriers are protected as is required by the basic objective. In all cases, the specific scram trip point selected is not the only value of the trip point that results in no damage to the fuel or nuclear system process barriers; trip setting selection is based on operating experience and constrained by the safety design basis.

The scrams initiated by neutron monitoring system variables, nuclear system high pressure, turbine stop valve closure, turbine control valve fast closure, and reactor vessel low water level are sufficient to prevent fuel damage following abnormal operational transients. Specifically, these scram functions initiate a scram in time to prevent the core from exceeding the thermal-hydraulic safety limit during abnormal operational transients.

The scram initiated by nuclear system high pressure, in conjunction with the pressure relief system, is sufficient to prevent damage to the nuclear system process barrier as a result of reactor pressure. For turbine-generator trips, the stop valve closure scram and turbine control valve fast closure scram provide a greater margin anticipatory to the nuclear system pressure safety limit than the high-pressure scram. Chapter 15 identifies and evaluates accidents and abnormal operational events that result in nuclear system pressure increases; in no case does pressure exceed the nuclear system safety limit.

The scram initiated by the neutron monitoring system, main steam isolation valve closure, and reactor vessel low water level satisfactorily limits the radiological consequences of gross failure of the nuclear system process barrier. Chapter 15 evaluates gross failures of the nuclear system process barrier; in no case does the release of radioactive material to the environs result in exposures that exceed the guideline values of published regulations.

Neutron flux (the neutron monitoring system variable) is the only essential variable of significant spatial dependence that provides inputs to the RPS. The basis for the number and locations of neutron flux detectors is discussed in Section 7.6.1. The other requirements are fulfilled through the combination of logic arrangement, channel redundancy, wiring scheme, physical isolation, power supply redundancy, and component environmental capabilities. The following discussion evaluates these subjects.

In terms of protection system nomenclature, the RPS is a one-out-of-two system used twice. Theoretically, its reliability is slightly higher than a two-out-of-three system and slightly lower than a one-out-of-two system. However, since the differences are slight, they can, in a practical sense, be neglected. The advantage of the dual-trip system arrangement is that it can be tested thoroughly during reactor operation without causing a scram. This capability for a thorough testing program, which contributes significantly to increased reliability, is not possible for a one-out-of-two system.

The use of an independent channel for each logic allows the system to sustain any channel failure without preventing other sensors monitoring the same variable from initiating a scram. A single sensor or channel failure will cause a single trip system trip and actuate alarms that identify the trip. The failure of two or more sensors or channels would cause either a single trip system trip if the failures were confined to one trip system, or a reactor scram if the failures occurred in different trip systems. Any intentional bypass, maintenance operation, calibration operation, or test, all of which result in a single trip system trip, leaves at least two channels per monitored variable capable of initiating a scram by causing a trip of the remaining trip system. The resistance to spurious scrams contributes to plant safety because unnecessary cycling of the reactor through its operating modes would increase the probability of error or actual failure.

An actual condition in which an essential monitored variable exceeds its scram trip point is sensed by at least two independent sensors in each trip system. Because only one channel must trip in each trip system to initiate a scram, the arrangement of two channels per monitored variable trip system provides assurance that a scram will occur as any monitored variable exceeds its scram setting.

Each control rod is controlled as an individual unit although the rods are scrammed in groups. A failure of the controls for one rod would not affect other rods. The backup scram valves provide a second method of venting the air pressure from the scram valves, even if either scram pilot valve solenoid for any control rod fails to deenergize when a scram is required.

Sensors, channels, and logics of the RPS are not used directly for automatic control of process systems. Therefore, failure in the controls and instrumentation of process systems cannot induce a failure of any portion of the protection system.

The failure of either RPS motor-generator set would result, at worst, in a single trip system trip. Alternate power is available to the RPS buses. A complete, sustained loss of electric power to both buses would result in a scram, delayed by the motor-generator set flywheel inertia.

The environmental conditions in which the instruments and equipment of the RPS must operate are considered in setting the environmental specifications. For the instruments located in the reactor or turbine buildings, the specifications are based on the

worst expected ambient conditions in which the instruments must operate. The RPS components that are located inside the primary containment are the condensing chambers. Special precautions are taken to ensure satisfactory operability after the accident. The condensing chambers are similar to those that have successfully undergone qualification testing in connection with other projects. Additionally, a continous purge system has been installed to prevent the accumulation of non-condensible gases that could come out of solution following rapid depressurization and subsequently adversely affect level indication.

Safe shutdown of the reactor during earthquake ground motion is ensured by the Seismic Category I design of the system and the fail-safe characteristics of the system. The system only fails in a direction that causes a reactor scram when subjected to extremes of vibration and shock.

To ensure that the RPS remains functional, the number of operable trip channels for the essential monitored variables should be maintained at or above the minimums given in Technical Specifications Table 3.3.1.1-1. The minimums apply to any untripped trip system; a tripped trip system may have any number of inoperative channels. Because reactor protection requirements vary with the mode in which the reactor operates, the tables show different functional requirements for the RUN and STARTUP modes. These are the only modes where more than one control rod can be withdrawn from the fully inserted position.

Calibration and test controls for the neutron monitoring system are located in the main control room and are, because of their physical location, under direct physical control of the plant operator. Calibration and test controls for pressure switches, level switches, and valve position switches are located in the turbine building, reactor building, and primary containment. [redacted] The plant operator is responsible for granting access to the setting controls to properly qualified plant personnel for the purpose of testing or calibration adjustment.

7.2.3 ATWS-RPT/ARI

The NRC, in 10CFR50.62, requires that certain systems be provided to cope with anticipated transients without scram (ATWS). For BWRs, the required systems are the Standby Liquid Control System, the Alternate Rod Injection (ARI) System, and the Recirculation Pump Trip (RPT) system. The DAEC Standby Liquid Control system is described in Section 9.3.4, and the ARI-RPT system is described in the following sections, and in References 3 through 6.

7.2.3.1 Design Basis Information

The ATWS-RPT/ARI system is designed to meet the requirements of 10CFR50.62 and NRC guidance (NRC Generic letter 85-03 and 85-06), which require it

- to be diverse from and independent of the reactor trip system, from sensor output to the final actuation devices,
- to have redundant scram air header exhaust valves, and
- to be designed to perform its function in a reliable manner.

It is not required to be redundant or to function during or after a seismic event, a design basis accident, or a sensing line failure.

The performance objective for ARI is that rod insertion should be completed within one minute to preclude degradation of the fuel cladding, and should also be completed prior to scram discharge volume pressurization or fill.

7.2.3.2 System Description

The ATWS-RPT/ARI system, shown in Figure 7.2-10, is provided to initiate both RPT and ARI in the event of either reactor high pressure or reactor low level. It initiates depressurization of the scram valve pilot air header which causes control rod insertion and provides trip signals to the breakers feeding the recirculation pumps. The system, a backup to the Reactor Protection System, is both separate from and independent of RPS. The high pressure setpoint is above the RPS high pressure setpoint, and the low level setpoint is below the RPS reactor low water level setpoint. This is to ensure that the ATWS mitigators do not activate prior to normal RPS trips. Instrumentation data is shown in Table 7.2-3.

There are two ATWS-RPT/ARI logic trains in the system, and each train has two pressure sensors, two level sensors, one trip coil in a breaker supplying each recirculation pump, and one valve to depressurize the scram valve pilot air header. The logic in each train is two-out-of-two: both pressure sensors or both level sensors must be tripped to trip their train. The system logic is one-out-of-two: a trip of either train will cause both reactor recirculation pumps to trip and ARI to initiate. This two-out-of-two-once logic ensures the system will respond to valid trips while minimizing the chance of spurious activation. Manual trip capability is also provided in the control room.

Power for the system is provided from the 125 VDC power systems, with separate power supplies for the two logic trains. Energize-to-trip logic is required to be used. Separate contacts on the same level sensors are used for the ATWS-RPT/ARI system and for the nuclear steam supply shutoff systems, while the pressure sensors are dedicated solely to the ATWS-RPT/ARI system, i.e., not shared with any other system in order to be diverse from RPS. In the ARI circuits, a seal-in feature is provided to allow time for the scram air header to fully depressurize before the logic resets, even if the trip signal has cleared. RPT occurs immediately on high reactor vessel pressure, while it is delayed

for 9 seconds following low-low water level to allow the Low Pressure Coolant Injection system loop selection logic to complete its function. Each logic train is equipped with a test switch which isolates the outputs and allows testing at power. However, the system, by virtue of its one-out-of-two-once design, will still provide the required trip with one train in the test mode. In addition, these test (keylocked) switches allow the operator to reset the ARI solenoid valves under conditions in which a Low-Low RPV level or High RPV Pressure signals exist as directed by Emergency Operating Procedures.

The instrument sensing lines associated with instrument racks and all system components (with the exception of the ARI solenoid valves, which are located on the non-seismic scram air header) are seismically supported.

System equipment is qualified to the environmental conditions that may be associated with an ATWS event. Although not required, the ATWS-RPT/ARI modifications were designed, procured and installed as Class 1E in accordance with the facility quality assurance program.

Provisions are made for surveillance testing of the system.

Post installation testing of the installed system showed that the performance objective listed in Section 7.2.3.1 is met.

REFERENCES FOR SECTION 7.2

1. General Electric Company, Basis for Installation Recirculation Pump Trip System, GE/NEDO-24220, September 1979.

2. General Electric Company, Compliance of Protection Systems to Industry Criteria and General Electric BWR Nuclear Steam Supply System, GE/NEDO-10139, June 1970.

3. General Electric Company, Anticipated Transients Without Scram (ATWS) Response to NRC Rule 10CFR50.62, GE/NEDE-31096-P, December 1985.

4. Letter from R. W. McGaughy (Iowa Electric) to H. Denton (NRC), Subject: Technical Specification Change (RTS-216) ATWS Modifications, dated February 25, 1987 (NG-87-0468).

5. Letter from R. W. McGaughy (Iowa Electric) to T. Murley (NRC), Subject: Revision to Iowa Electric's ATWS Rule (10CFR50.62) Compliance Report, dated June 1, 1987 (NG-87-2038).

6. Letter from W. C. Rothert (Iowa Electric) to T. Murley (NRC), Subject: Response to Request for Additional Information Regarding the Duane Arnold ATWS Design, dated November 13, 1987 (NG-87-3837).

7. Letter from J. Franz (Iowa Electric) to T. Murley (NRC), Subject: Request for Technical Specifications Change (RTS-247) Removal of RPS Electrical Protection Assembly Time Delay Requirements, dated March 13, 1992 (NG-92-1269).

Table 7.2-1

REACTOR PROTECTION SYSTEM SCRAM SETTINGS

Scram Function	Instrument	Nominal Setting
Neutron monitoring system scram	See Section 7.6.1, "Neutron Monitoring System"	See Section 7.6.1, "Neutron Monitoring System"
Nuclear system high pressure	Pressure switch	1040 psig (alarm) 1055 psig (trip)
Reactor vessel low water level	Level switch	+170 in. indicated level[a]
Turbine stop valve closure	Position switch	10% valve closure
Turbine control valve fast closure (Loss of Control Oil Pressure)	Pressure switch	⇔ 30 msec following start of control valve fast closure
Main steam line isolation valve closure	Position switch	10% valve closure
Scram discharge volume high water level	Level switch	60 gal
Primary containment pressure	Pressure switch	2.0 psig

[a] Zero referenced to top of active fuel (344.5 in. above vessel zero).

Table 7.2-2

VALVE CHANNEL SENSING LOGIC

Valve Identification	Position Sensing Channels	Channel Logic Relays	Channel Logic Assignment
Main steam line A inboard valve	F022A (1) & (2)	A, B	A1, B1
Main steam line A, outboard valve	F028A (1) & (2)	A, B	A1, B1
Main steam line B, inboard valve	F022B (1) & (2)	E, D	A1, B2
Main steam line B, outboard valve	F028B (1) & (2)	E, D	A1, B2
Main steam line C, inboard valve	F022C (1) & (2)	C, F	A2, B1
Main steam line C, outboard valve	F028C (1) & (2)	C, F	A2, B1
Main steam line D, inboard valve	F022D (1) & (2)	G, H	A2, B2
Main steam line D, outboard valve	F028D (1) & (2)	G, H	A2, B2

Table 7.2-3

ATWS-RPT-ARI INITIATION INSTRUMENTATION

Function	Instrument	Nominal Set point
Reactor High Pressure	Pressure Switch	1140 psig (max)
Reactor Low Water Level	Level Switch	119.5 in (min)*

* Above top of active fuel

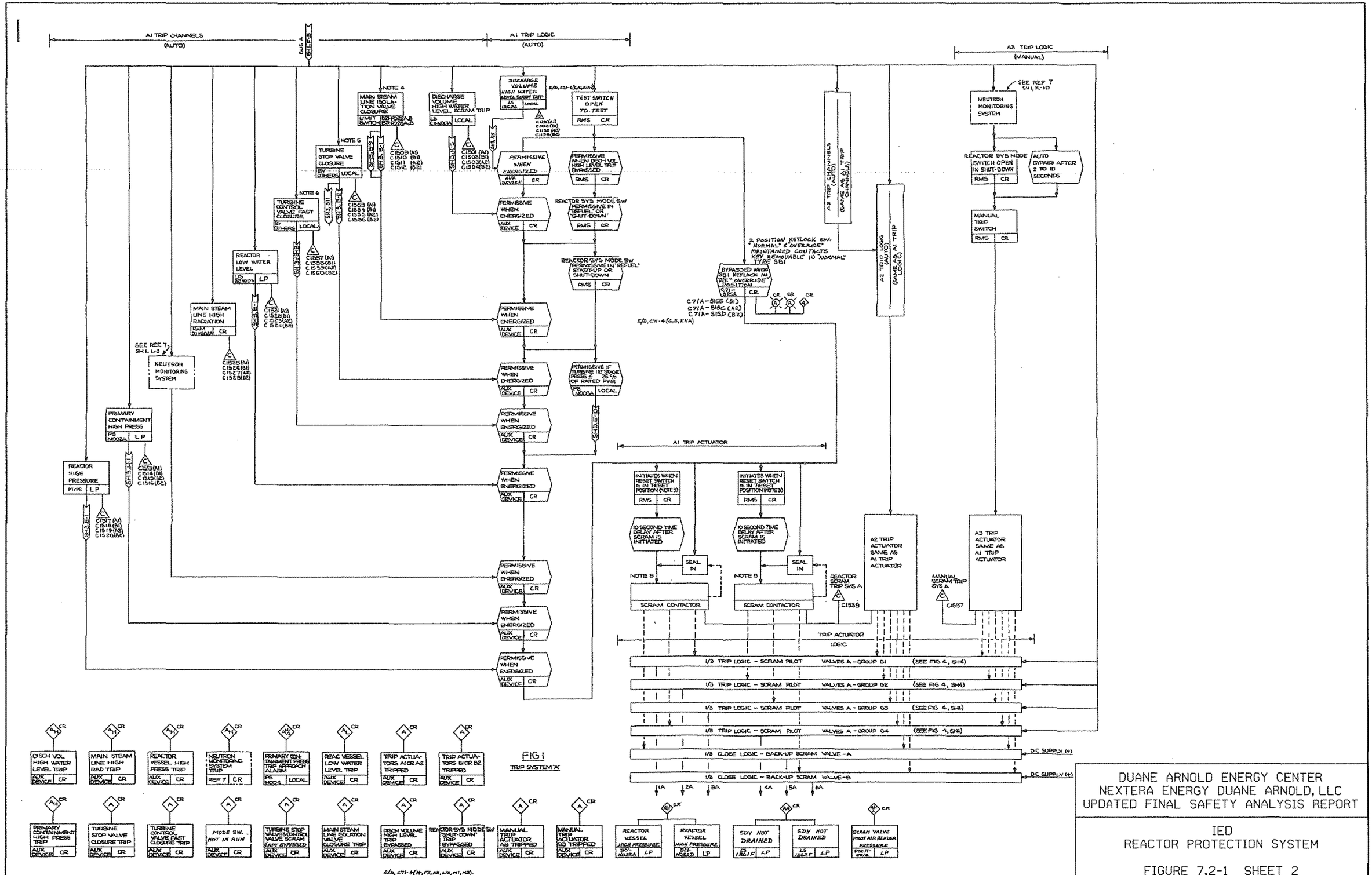

FIG 1
TRIP SYSTEM "A"

DUANE ARNOLD ENERGY CENTER
NEXTERA ENERGY DUANE ARNOLD, LLC
UPDATED FINAL SAFETY ANALYSIS REPORT

IED
REACTOR PROTECTION SYSTEM

FIGURE 7.2-1 SHEET 2

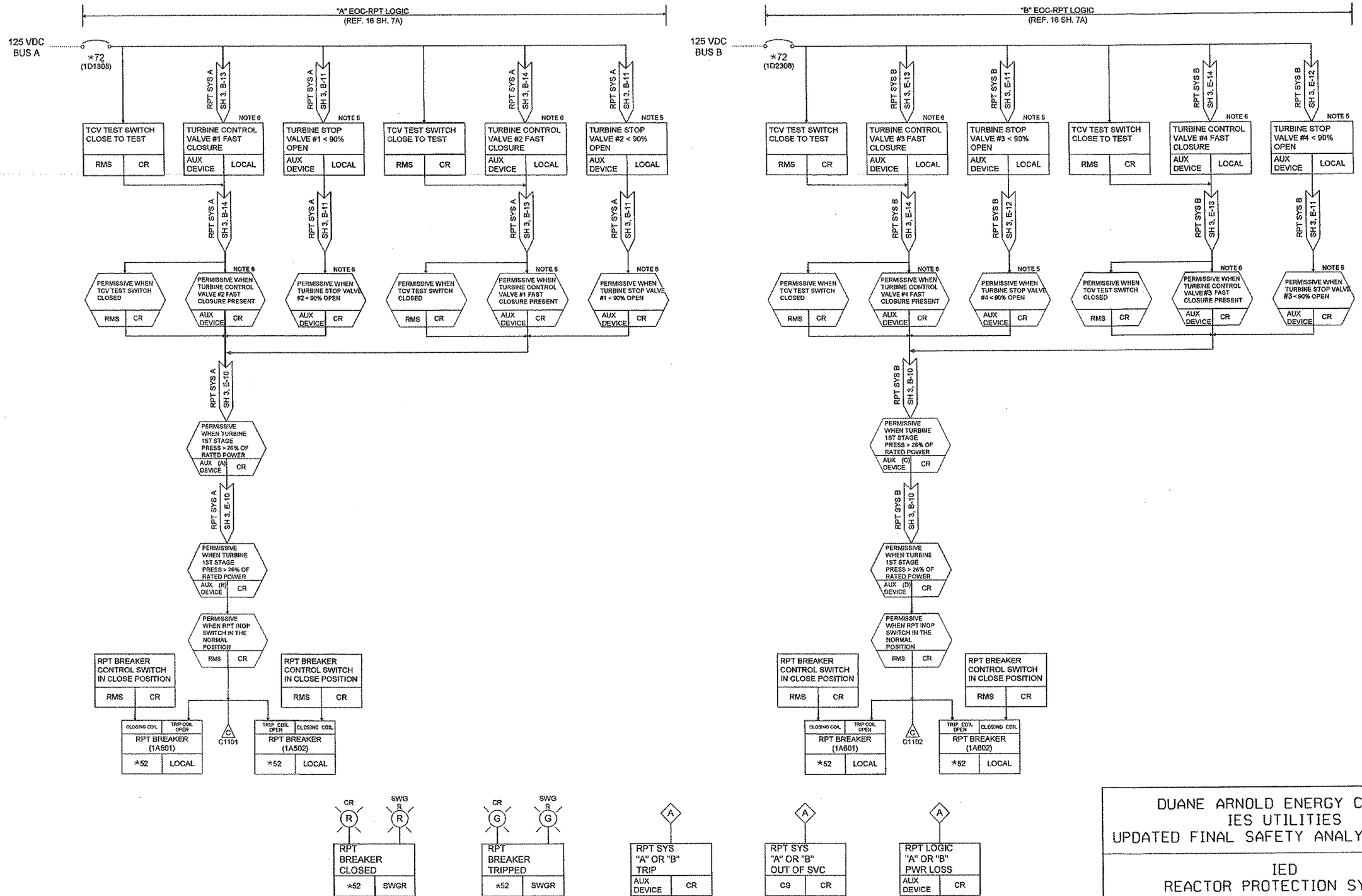

DUANE ARNOLD ENERGY CENTER
IES UTILITIES
UPDATED FINAL SAFETY ANALYSIS REPORT

IED
REACTOR PROTECTION SYSTEM

FIGURE 7.2-1 SHEET 2A

REVISION 18 - 10/05

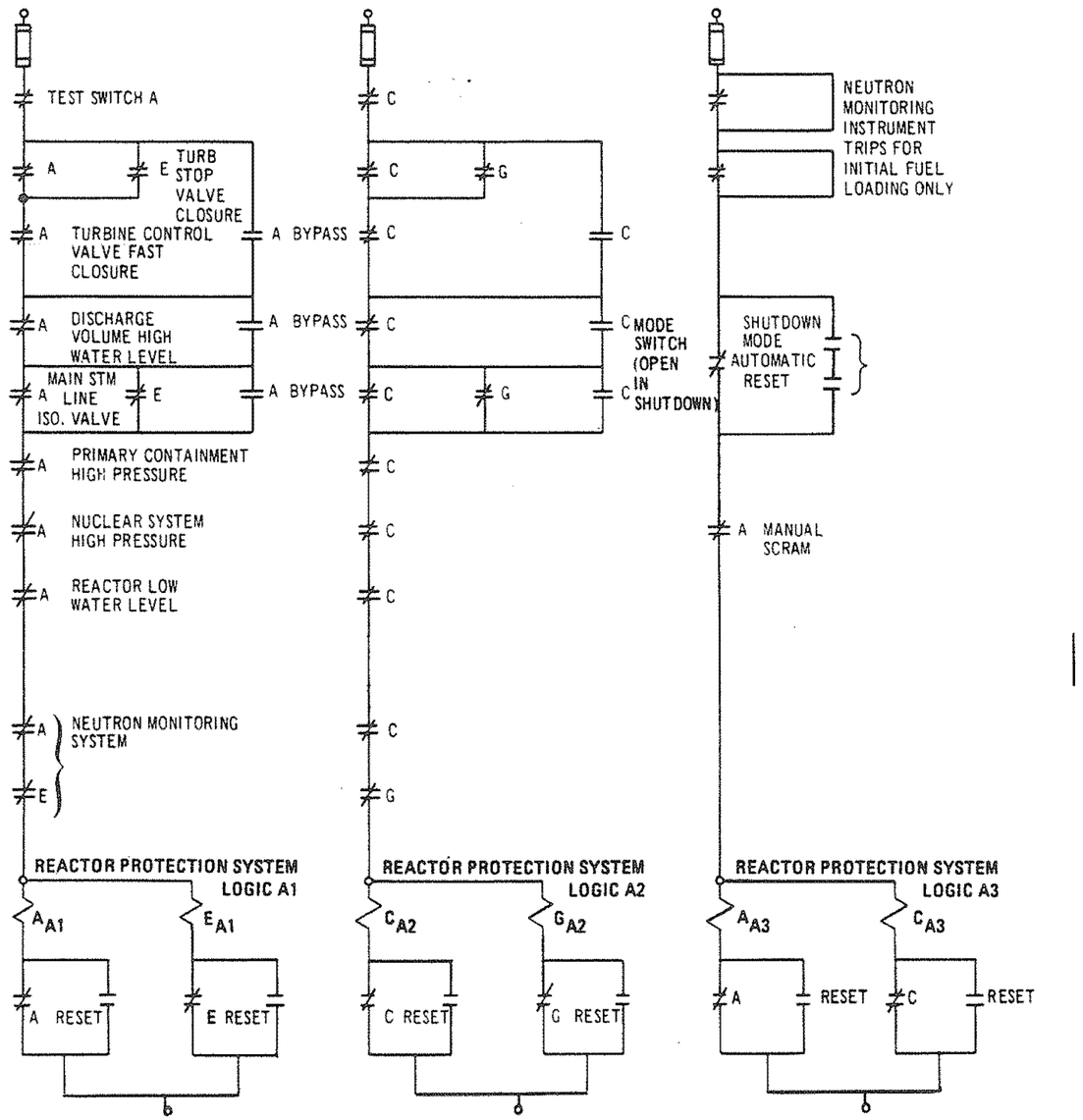

NOTE: CONTACTS SHOWN IN NORMAL CONDITION

DUANE ARNOLD ENERGY CENTER
IOWA ELECTRIC LIGHT & POWER COMPANY
UPDATED FINAL SAFETY ANALYSIS REPORT

Schematic Diagram of Logics in One Trip System

Figure 7.2-2

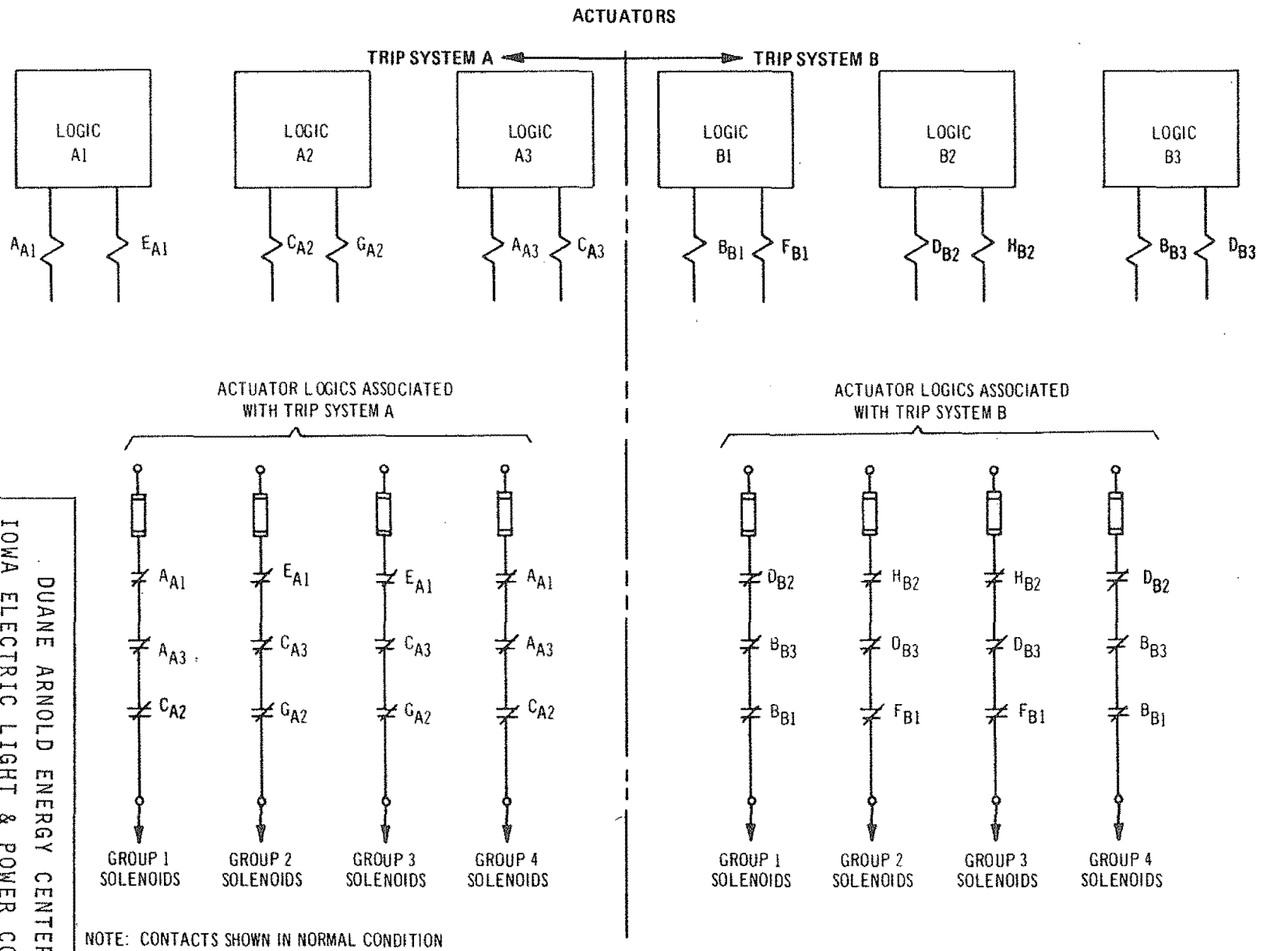

DUANE ARNOLD ENERGY CENTER
IOWA ELECTRIC LIGHT & POWER COMPANY
UPDATED FINAL SAFETY ANALYSIS REPORT

Schematic Diagram of Actuators and Actuator Logics

Figure 7.2-3

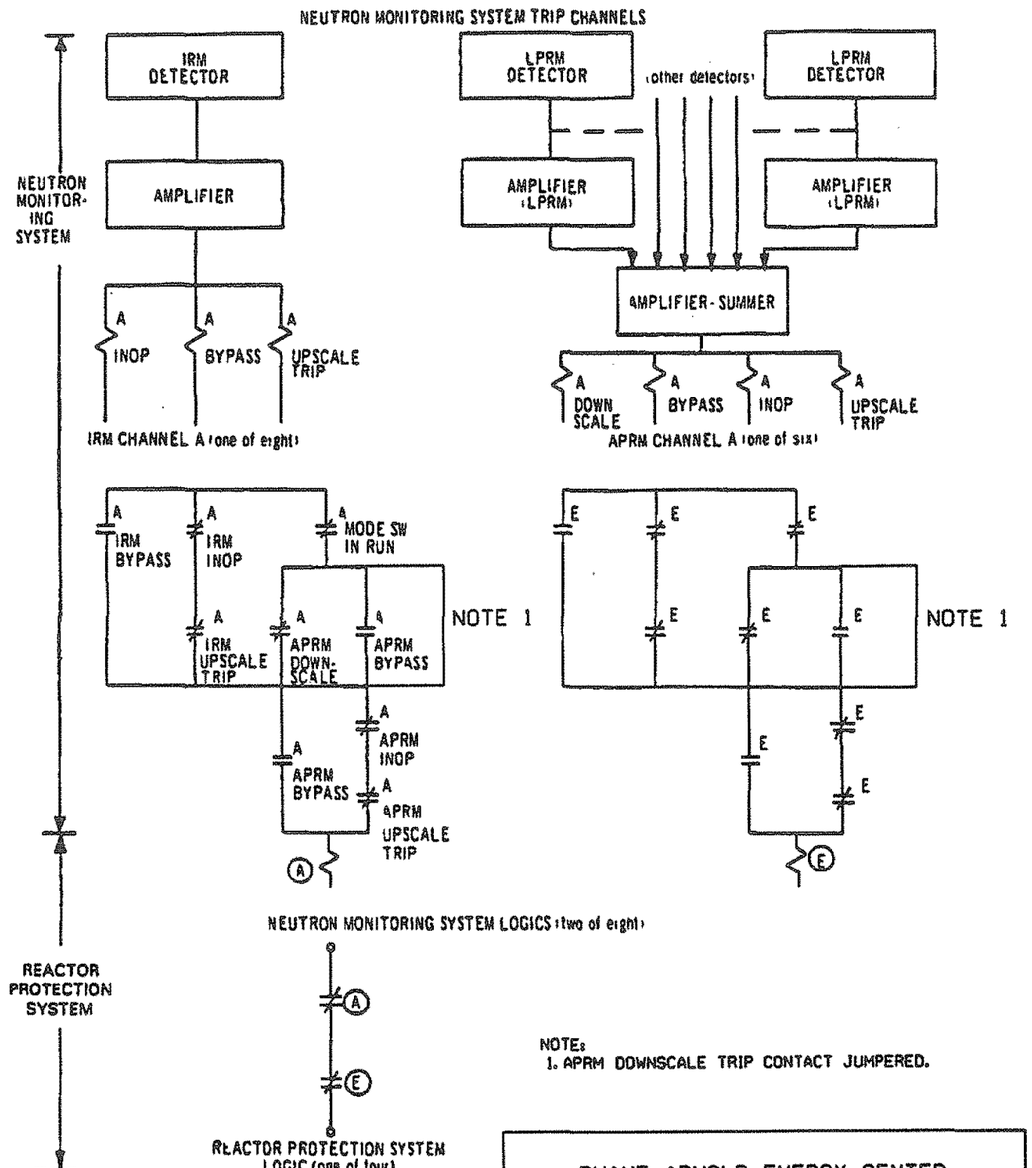

NOTE:
1. APRM DOWNSCALE TRIP CONTACT JUMPERED.

DUANE ARNOLD ENERGY CENTER
IES UTILITIES
UPDATED FINAL SAFETY ANALYSIS REPORT

RELATIONSHIP BETWEEN
NEUTRON MONITORING
AND REACTOR PROTECTION SYSTEM

FIGURE 7.2-4

REVISION 15 - 5/00

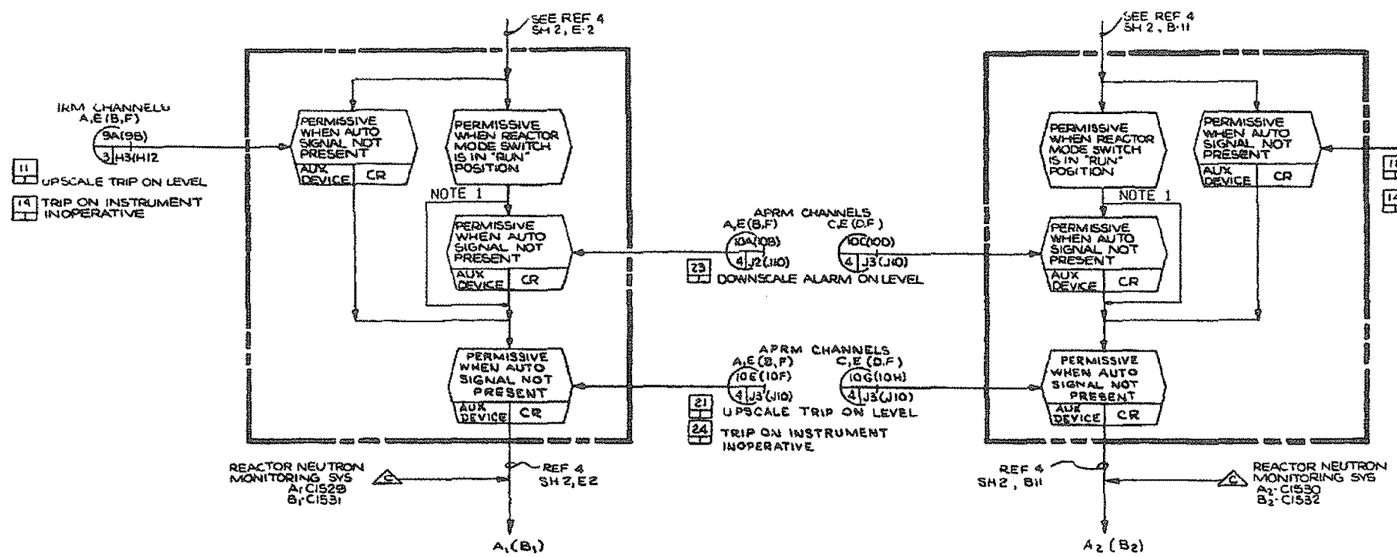

NOTE:
1. APRM DOWNSCALE TRIP JUMPERED.

DUANE ARNOLD ENERGY CENTER
IES UTILITIES
UPDATED FINAL SAFETY ANALYSIS REPORT

FUNCTIONAL CONTROL DIAGRAM FOR NEUTRON MONITORING LOGICS

FIGURE 7.2-5

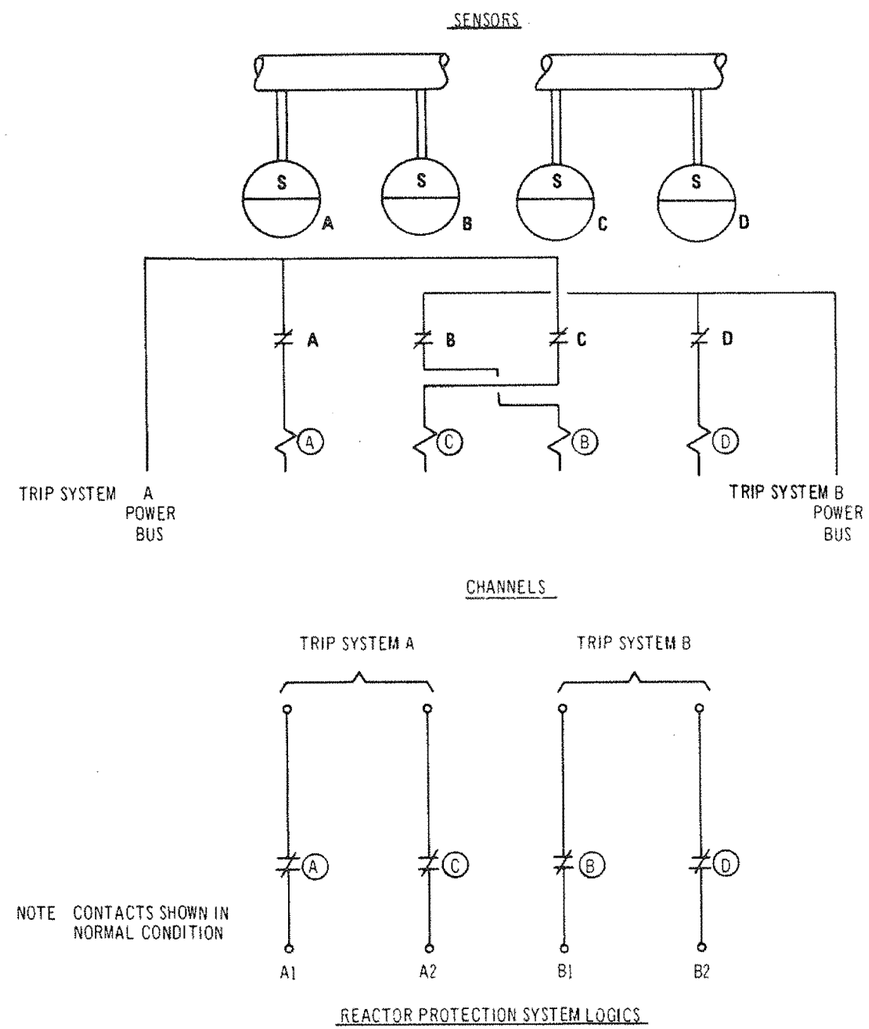

TYPICAL CONFIGURATION FOR
SCRAM DISCHARGE VOLUME HIGH WATER LEVEL*
TURBINE CONTROL VALVE FAST CLOSURE
REACTOR VESSEL LOW WATER LEVEL

MAIN STEAM LINE HIGH RADIATION
PRIMARY CONTAINMENT HIGH PRESSURE
NUCLEAR SYSTEM HIGH PRESSURE

*EACH LOGIC TRAIN FOR THE SCRAM DISCHARGE VOLUME HAS TWO REDUNDANT PARALLEL SWITCHES (MAGNETROL FLOAT AND THERMALLY ACTIVATED). SEE SECTION 7.2.1.2.3.

DUANE ARNOLD ENERGY CENTER
IOWA ELECTRIC LIGHT & POWER COMPANY
UPDATED FINAL SAFETY ANALYSIS REPORT

Typical Arrangement of Channels and Logics

Figure 7.2-6

Revision 2 - 6/84

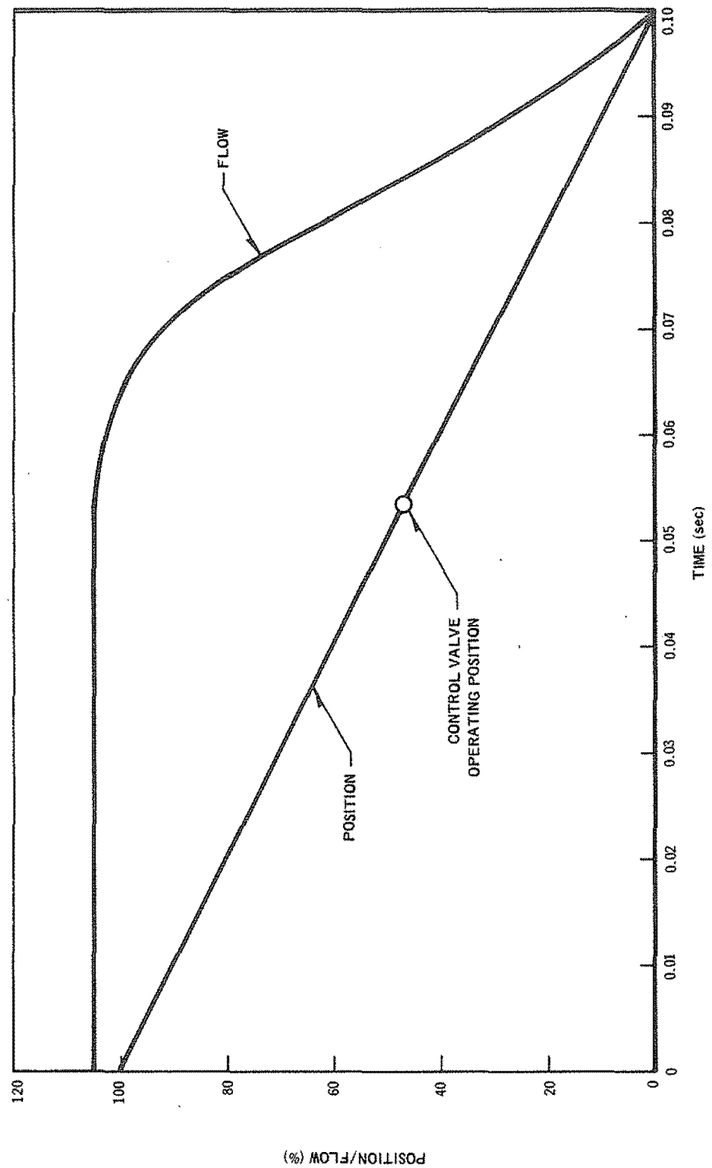

DUANE ARNOLD ENERGY CENTER
IOWA ELECTRIC LIGHT & POWER COMPANY
UPDATED FINAL SAFETY ANALYSIS REPORT

Turbine Stop Valve Performance Characteristics

Figure 7.2-7

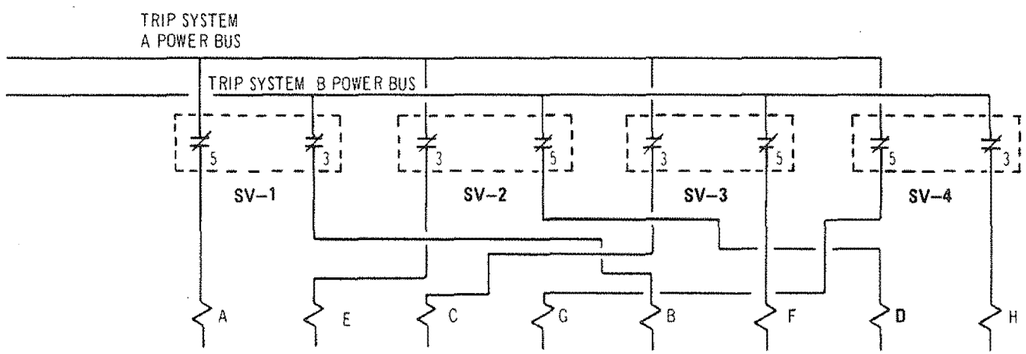

TURBINE STOP VALVE CLOSURE CHANNELS

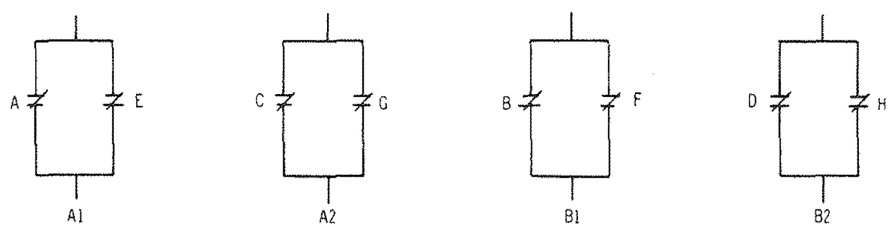

REACTOR PROTECTION SYSTEM LOGICS

NOTE: CONTACTS SHOWN IN NORMAL CONDITION

SV = STOP VALVE

DUANE ARNOLD ENERGY CENTER
IOWA ELECTRIC LIGHT & POWER COMPANY
UPDATED FINAL SAFETY ANALYSIS REPORT

Typical Configuration for
Turbine Stop Valve Closure Scram

Figure 7.2-8

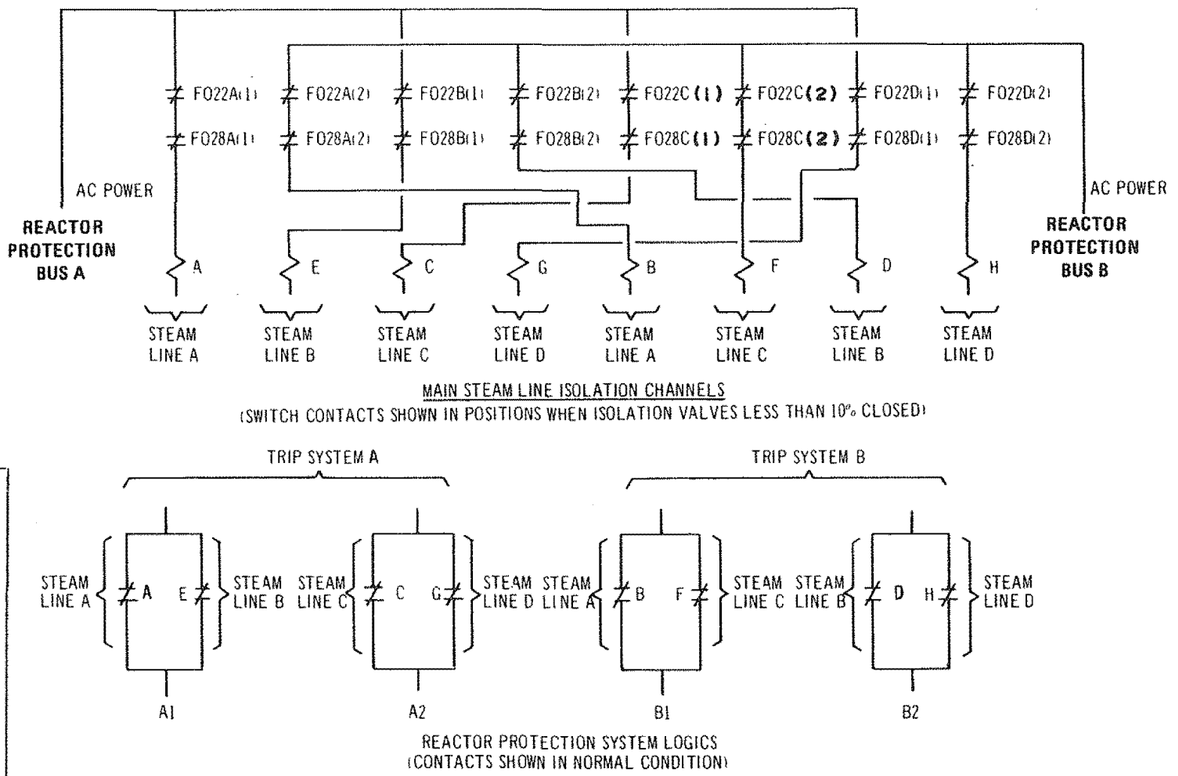

KEY: FO22A – STEAM LINE A, INBOARD VALVE
FO28A – STEAM LINE A, OUTBOARD VALVE
FO22B – STEAM LINE B, INBOARD VALVE
FO28B – STEAM LINE B, OUTBOARD VALVE
FO22C – STEAM LINE C, INBOARD VALVE
FO28C – STEAM LINE C, OUTBOARD VALVE
FO22D – STEAM LINE D, INBOARD VALVE
FO28D – STEAM LINE D, OUTBOARD VALVE

DUANE ARNOLD ENERGY CENTER
IOWA ELECTRIC LIGHT & POWER COMPANY
UPDATED FINAL SAFETY ANALYSIS REPORT

Typical Configuration for Main Steam Line Isolation Scram

Figure 7.2-9

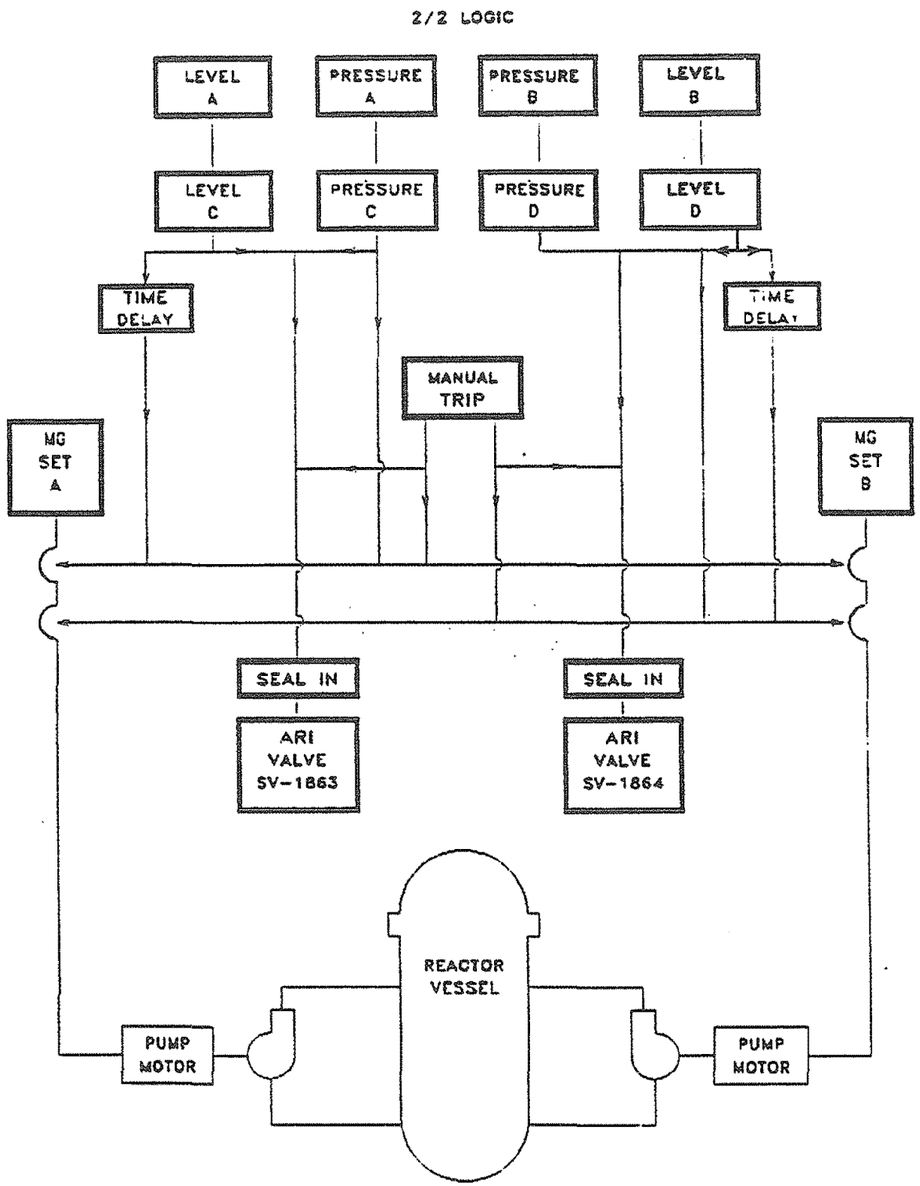

DUANE ARNOLD ENERGY CENTER

IES UTILITIES, INC.

UPDATED FINAL SAFETY ANALYSIS REPORT

DAEC ATWS - RPT/ARI

FIGURE 7.2-10

7.3 ENGINEERED SAFETY FEATURE SYSTEMS

7.3.1 DESCRIPTION

Included in this section are instrumentation and control descriptions, design bases, analyses, tests and inspections, and environmental considerations for the following systems:

1. Primary containment isolation and nuclear steam supply (PCI/NSS) shutoff.

2. Emergency core cooling, comprised of the following systems:

    a. High-pressure coolant injection.

    b. Automatic depressurization.

    c. Core spray.

    d. Low-pressure coolant injection.

7.3.1.1 System Descriptions

7.3.1.1.1 Primary Containment Isolation and Nuclear Steam Supply Shutoff System

7.3.1.1.1.1 Definitions

The primary containment isolation valves are grouped into three basic types.

Type A isolation valves are on process lines that communicate directly with the reactor vessel and penetrate the primary containment.

Type B isolation valves are on process lines that do not communicate directly with the reactor vessel, but penetrate the primary containment and communicate with the primary containment free space.

Type C isolation valves are on process lines that penetrate the primary containment, but do not communicate directly with the reactor vessel, with the primary containment free space, or with the environs.

7.3.1.1.1.2 Identification

The PCI/NSS shutoff system includes the sensors, channels, switches, power supplies, and remotely activated valve closing mechanisms associated with the valves, which when closed, effect the isolation of the primary containment or reactor vessel, or both. It should be noted that the control systems for those Type A and B isolation valves that close by automatic action pursuant to the safety design bases are the main subjects of this section. However, Type C automatic and remotely operated isolation valves are included because they add to the operator's ability to effect isolation. The PCI/NSS shutoff system is designed to meet the IEEE Criteria for Nuclear Power Plant Protection Systems (IEEE-279).

7.3.1.1.1.3 Power Supply

The power for the channels and logics of the PCI/NSS shutoff system is supplied from the two RPS buses (see Figure 7.2-1). Isolation valves receive power from standby ac power buses or from plant dc buses. Power for the operation of two valves in a line is fed from different sources. In most cases, one valve is powered from an ac bus of appropriate voltage, and the other valve is powered by dc from the plant batteries. The main steam isolation valves, which are described in detail below, use ac, dc, and pneumatic/spring pressure in the control scheme. Table 7.3-1 lists the power supply for each isolation valve.

7.3.1.1.1.4 Physical Arrangement

Table 7.3-1 lists the lines that penetrate the primary containment and indicates the types and locations of the isolation valves installed in each line. Figures 6.2-2 and 6.2-3 identify some of these lines. Lines that penetrate the primary containment and are in direct communication with the reactor vessel generally have two Type A isolation valves, one inside the primary containment and one outside the primary containment. Lines that penetrate the primary containment and communicate with the primary containment free space, but do not communicate directly with the reactor vessel, generally have two Type B isolation valves located outside the primary containment. Type A and Type B automatic isolation valves are considered essential for protection against the gross release of radioactive material in the event of a breach in the nuclear system process barrier. Process lines that penetrate the primary containment, but do not communicate directly with the reactor vessel, the primary containment free space, or the environs, have at least one Type C isolation valve located outside the primary containment that may close on receiving an automatic isolation signal, by process action (reverse flow), or by remote manual operation. The controls for the automatic isolation valves are discussed in this

section of the UFSAR. The valves that are the subject of this text are specifically identified in the following detailed descriptions.

Power cables are run in conduits and cable trays from appropriate electric sources to the motor or solenoid involved in the operation of each isolation valve. The control arrangement for the main steam line isolation valves includes pneumatic piping and an accumulator for those valves for which air is considered an emergency source of motive power for closing. Pressure and water-level sensors are mounted on instrument racks, and valve position switches are mounted on the valve for which position is to be indicated. Switches are enclosed in cases to protect them from environmental conditions. Cables from each sensor are routed in conduits and cable trays to the main control room. All signals transmitted to the control room are electric; no pipe from the nuclear system or the primary containment penetrates the main control room. Pipes that are used to transmit level information from the reactor vessel to sensing instruments terminate inside the secondary containment (reactor building). The sensor cables and power supply cables are routed to cabinets in the main control room where the logic arrangements of the system are formed.

The locations of temperature switches within the reactor and turbine buildings that provide isolation signals to the RCIC and HPCI steam line isolation valves are shown in Figure 7.3-1, Sheets 1, 2, and 3. The locations of the temperature switches which provide isolation signals to the main steam line isolation valves in these buildings are shown on Figure 7.3-2, Sheet 1. The location of the coolers (1V-AC-XX) and ventilation ducts that provide cooling to these areas is shown on Figures 7.3-1 and 7.3-2. The locations of all steam lines and other hot pipes that add to compartment heat loads in these areas are shown in Figure 7.3-3.

To ensure continued protection against the uncontrolled release of radioactive materials during and after earthquake ground motions, the control systems required for the automatic closure of Type A and Type B valves are designed as Seismic Category I equipment, as described in Section 3.7.3.

7.3.1.1.1.5 Logic

Redundant automatic isolation valves in a given line are individually controlled by one of two isolation trip systems. Each trip system is maintained as an independent entity from the other trip system. Both trip systems are used to actuate the closure of inboard and outboard main steam line isolation valves.

The main steam line isolation valves are controlled from four logic strings as shown in Figure 7.3-4. The variables initiating automatic closure of the main steam line isolation valves are as follows:

1. Low-low-low reactor water level

2. Deleted

3. High main steam line flow

4. High temperature in the vicinity of the main steam lines

5. Low main steam line pressure when in the RUN mode

6. Main condenser low vacuum

Typically, four channels are provided for each variable. One channel of each variable is connected to a particular logic to maintain channel independence and separation. One output of each logic actuator is used to control the inboard valves of all four main steam lines and a second output of each logic actuator is used to control the outboard valves of all four main steam lines. The two individual outputs of each logic actuator are obtained from relay isolated contacts.

For each valve to automatically close, both of its solenoids must be deenergized. Each solenoid receives inputs from two logics, and either input can cause deenergization of that solenoid. Hence, automatic closure of any one valve is dependent on one-out-of-two trips to one solenoid and one-out-of-two trips to the second solenoid.

The main steam line drain valves and reactor water sample valves are controlled from the four logic strings as shown in Figure 7.3-5. In this instance, the logic actuator outputs are connected in a two-out-of-two logic to each isolation valve. The inboard valve will isolate if both A1 and B1 logics are tripped; similarly, the outboard valve will isolate if both A2 and B2 logics are tripped.

Other inboard and outboard isolation valves, except for the reactor water cleanup (RWCU) system isolation valves, are controlled from drywell high pressure and reactor low-water-level variables. Two drywell pressure sensors are combined with two water level sensors to form a "hybrid" one-out-of-two-twice network for the inboard isolation valves. Two other drywell high pressure and two other water-level sensors are used in a second hybrid network for the outboard isolation valves. This logic is shown in Figure 7.3-6, Sheet 1.

These same drywell pressure and water level logics are used with process radiation monitoring signals to produce other isolation actions, including the initiation of the standby gas treatment system.Refer to sections 11.5.3.3 and 11.5.5.3 for details on these trip logics.

The RWCU system isolation valves are controlled by two logics using high differential flow, high RWCU system room temperature, high RWCU system room differential temperature, and low ("low-low") water level isolation signals. One logic controls the inboard valve and a second logic controls the outboard valve of the cleanup loop.

The basic arrangement just described does not apply to Type C isolation valves. Exceptions to the basic logic arrangement are made in several instances for certain Type A and Type B isolation valves as described below.

7.3.1.1.1.6 Operation

Automatic isolation valves that are normally closed receive the isolation signal as well as those valves that are open. The control system for each Type A isolation valve is designed to provide the closure of the valve in time to prevent uncovering the fuel as a result of a break in the line that the valve isolates. The control systems for Type A and Type B isolation valves are designed to provide the closure of the valves with sufficient rapidity to restrict the release of radioactive material to the environs below the guideline values of applicable regulations.

All automatic Type A, Type B, and Type C valves and remotely operable Type C valves can be closed by manipulating switches in the main control room, thus providing the operator with means independent of the automatic isolation functions.

Once isolation is initiated, the valve continues to close, even if the condition that caused isolation is restored to normal.

The operator must manually operate switches in the main control room to reopen a valve that has been automatically closed. Unless manual override features are provided in the manual control circuitry, the operator cannot reopen the valve until the conditions that initiated isolation have cleared. The modification of containment isolation design in accordance with NUREG-0578, Item 2.1.4, is discussed later in this section.

Keylock switches with indicator lights are provided to override certain isolation signals, allowing operator action as required by Emergency Operating Procedures, to be performed readily without the use of jumpers. Isolation override is annunciated. Four switches are provided for the low-low-low reactor water level Group 1 isolation signals, one each for channels A1, A2, B1 and B2. Two switches are provided for high drywell pressure and low reactor level signals for the Group 3 isolation signals, one to override the inboard isolation logic and the other to override the outboard isolation logic.

The following overrides are used in support of the Emergency Operating procedures (EOPs) in lieu of jumpers and lifted leads. Except where specified otherwise, each override

switch action is a two-position key-lock switch with the key removable only in the left (counterclockwise) position. The override function is enabled only in the right (clockwise) position. Therefore, the key cannot be removed from the switch while the switch is in the override position, which enhances the administrative control aspects of the override feature. All key-lock switches required for deliberate override of safety systems are under the direct control of the Control Room Supervisor.

1. MSIV and Main Steam Line Drain Isolation (Group 1) Defeats

   These defeats bypass all possible valve closure signals and permit the reopening of any of the affected valves in order to establish a vent path for the Reactor Pressure Vessel (RPV). Four (4) key-lock switches are installed; one for each isolation channel (A1, A2, B1, and B2). Each switch has an associated amber light and individually annunciates on front panel 1C-14 when taken to override.

   This override utilizes locking brass handle switches which are unique from others at DAEC and only used for override functions associated with the EOPs.

2. HPCI Steam Line Isolation Defeat

   This defeat allows the use of the HPCI steam line to depressurize the RPV via operation of the HPCI turbine. Key-lock switches are installed to override turbine isolation and trip on low steam line pressure, high RPV water level and high ambient or differential temperature to enable turbine reset for a non-steam line break condition. Each switch annunciates on front panel 1C-14 when taken to override. Each switch, with the exception of the high temperature overrides, has an associated amber light. Each HPCI Steam Line Isolation valve (MO-2238 and MO-2239) has an override switch which will remove any automatic open signal when the switch is taken to override. This modification prevents the automatic opening of these valves with a potentially large differential pressure across the valves and subsequent damage to downstream components.

3. RCIC Steam Line Isolation Defeat

   This defeat allows the use of the RCIC steam line to depressurize the RPV via operation of the RCIC turbine. Key-lock switches are installed to override turbine isolation and trip on low steam line pressure, high RPV water level and high ambient or differential temperature to enable turbine reset for a non-steam line break condition. Each switch has an associated amber light and annunciates on front panel 1C-14 when taken to override. Each RCIC Steam Line Isolation valve (MO-2400 and MO-2401) has an override switch which will remove any automatic open signal when the switch is taken to override. This

modification prevents the automatic opening of these valves with a potentially large differential pressure across the valves and subsequent damage to downstream components.

4. Drywell/Torus Vent and Purge Isolation Defeat

This defeat allows venting and purging of the Drywell or Torus regardless of the radioactive release in support of the Primary Containment Pressure and Hydrogen Control Sections of EOP-2 by bypassing all Group III isolations. Two key-lock switches are installed to override all isolation signals (one in each isolation channel). Each switch has an associated amber light and individually annunciates on front panel 1C-14 when taken to override.

This override utilizes locking brass handle switches which are unique from others at DAEC and are only used for override functions associated with the EOPs.

2016-003

5. RHR Discharge to Radwaste Isolation Defeat

This defeat allows the RHR Discharge to Radwaste Valves to remain open with the presence of a Group II Isolation signal. This defeat is to support the Torus Level Control Section of EOP-2 by allowing the Torus to be drained via the Radwaste System. Two key-lock switches are installed to override all isolation signals (one for each valve). Each switch has an associated amber light and annunciates on front panel 1C-14 when taken to override.

6. RWCU RPV Low-Low Level & RWCU Area Temperature Isolation Defeat

This defeat permits RWCU isolation valves to be opened or to remain open in support of Alternate Boron Injection. This defeat also allows RWCU to be used to lower RPV level as directed in the Power/Level Control Section of EOP-ATWS. Two key-lock switches are installed to override the isolation signals (one for each isolation channel). Each switch has an associated amber light and annunciates on front panel 1C-14 when taken to override.

7. Drywell Cooling Isolation Defeats

Two key-lock switches allow drywell cooling to be re-established following an isolation signal and allow drywell cooling fans to run in fast speed with an isolation signal present. These switches also override the shift to slow speed of the drywell fans when a high drywell pressure signal is received, thus allowing the fans to run in fast speed. Each switch has an associated amber light and individually annunciates on front panel 1C-14 when taken to override.

A trip of an isolation control system channel (except Group 7) is annunciated in the main control room so that the operator is immediately informed of the condition. The response of isolation valves is indicated by "open-closed" lights. One set is located near the manual control switches for the control of each valve from the main control room panel. The positions of air-operated isolation valves are displayed in the same manner as motor-operated valves.

Input to annunciators, indicators, and the process computer are arranged so that no malfunction of the annunciating, indicating, or computing equipment can functionally disable the system. Signals directly from the isolation control system sensors are not used as inputs to annunciating or data logging equipment. Isolation is provided between the primary signal and the information output.

7.3.1.1.1.7 Isolation Valve Closing Devices and Circuits

Table 7.3-1 itemizes the closing device provided for each isolation valve used in automatic or remote manual isolation of the primary containment or reactor vessel. To meet the requirement that automatic Type A valves be fully closed in time to prevent the reactor vessel water level from falling below the top of the active fuel as a result of a break of the line that the valve isolates, the valve closing mechanisms are designed to give minimum closing rates. In many cases, a standard closing rate of 12 in./min is adequate to meet isolation requirements. Using the standard rate, a 12-in. valve is closed in 60 sec. Conversion to actual closing time can be made by using the size of the line to be isolated. Because of the relatively long time required for fission products to reach the containment atmosphere following a break in the nuclear system process barrier inside the primary containment, a standard closure rate (12 in./min) is adequate

for the automatic closing devices on Type B isolation valves. The design maximum closure times for the various automatic isolation valves essential to reactor vessel isolation are as follows:

Valves	Design Maximum Closure Times (sec)	Line Nominal Size (in.)
Main steam line isolation valves	3-5	20
Main steam line drain isolation valves	25	3
Reactor core isolation cooling (RCIC) system steam line isolation valves	20	4
HPCI system steam line isolation valves	13	10
RHR system shutdown cooling supply isolation valves	22	18
RHR system shutdown cooling inboard discharge isolation valves (MO1905, MO2003)	25	20
RWCU system supply isolation valves	22	4
RWCU isolation valve (enters feedwater line outside primary containment	20	4

Motor operators for Type A and Type B isolation valves are selected with capabilities suitable to the physical and environmental requirements of service. The required valve closing rates were considered in specifying motor operators.

Torque and limit switches are used to ensure proper valve seating in accordance with GL 89-10. Handwheels, which are automatically disengaged from the motor operator when the motor is energized, are provided for local hand operation.

Direct solenoid-operated isolation valves and solenoid nitrogen pilot valves are chosen with electrical and mechanical characteristics that make them suitable for the service for which they are intended. Appropriate watertight or weathertight housings are used to ensure proper operation under accident conditions. (Note: air has been replaced by nitrogen as the fluid used to operate pneumatic actuators inside containment.)

The main steam isolation valves are spring/pneumatic-closing, electrical pneumatic-opening, piston-operated valves designed to close on loss of electrical power to both solenoid pilot valves or pneumatic pressure to the valve operator. This is a fail-safe design. The control arrangement is shown in Figure 7.3-6, Sheet 2, and Figure 7.3-7. Closure time for the valves is adjustable between 3 and 5 sec. Each valve is piloted by two 3-way, packless, direct-acting, solenoid-operated pilot valves, one powered by ac, the other by dc. An accumulator is located close to each isolation valve to provide pneumatic pressure for valve closing in the event of the failure of the normal non-safety nitrogen supply system. Control nitrogen to the inboard MSIVs is provided from each MSIV accumulator. Each control nitrogen line to each outboard MSIV contains an accumulator and check valve and is provided from the non-safety nitrogen supply system.

The main steam isolation valve characteristics used in the transient analysis (Chapter 15) are given in Figure 7.3-8.

The valve pilot system and the pneumatic lines, as shown in Figure 7.3-7, are arranged so that when one or both solenoid-operated pilot valves are energized normal nitrogen supply provides pneumatic pressure to the nitrogen-operated pilot valve to direct nitrogen pressure to the main valve pneumatic operator. This overcomes the closing force exerted by the spring to keep the main valve open. When both pilots are deenergized, as would be the result of both trip systems tripping or placing the manual switch in the closed position, the path through which nitrogen pressure acts is switched so that the opposite side of the valve operator is pressurized, thus assisting the spring in closing the valve. In the event of nitrogen supply failure, the loss of nitrogen pressure will cause the nitrogen-operated pilot valve to move by spring force to the position resulting in main valve closure. Main valve closure is then effected by means of the nitrogen stored in the accumulator and by the spring. However, the inboard MSIVs will be closed per plant operating procedures prior to nitrogen-operated pilot valve repositioning due to loss of nitrogen pressure.

Nitrogen pressure, acting alone, and the force exerted by the spring, acting alone, are each capable of independently closing the valve with the exception of the isolation valves inside the primary containment (inboard). These inboard valves are designed to close using both pneumatic

pressure and spring force with the vented side of the piston operator at the containment peak accident pressure. (The outboard valve is exactly the same design, although it will be subjected only to atmospheric pressures.) To ensure inboard MSIV closure at peak drywell pressures, the plant operating procedures instruct the control room operators to declare the MSIV(s) inoperable and take the appropriate actions per Technical Specifications and close an inboard MSIV prior to its accumulator pneumatic pressure degrading to the point where there is insufficient stored energy to close at the containment peak accident pressure. Thus, inboard MSIV closure is assured.

The accumulator volume was chosen to provide enough pressure to close the valve when the pneumatic supply to the accumulator has failed. The supply line to the accumulator is large enough to make up pressure to the accumulator at a rate faster than the valve operation bleeds pressure from the accumulator during valve opening or closing.

A separate, single, solenoid-operated pilot valve with an independent test switch is included to allow manual testing of each isolation valve from the main control room. The testing arrangement is designed to give a slow closure of the isolation valve being tested to avoid rapid changes in steam flow and nuclear system pressure. Slow closure of a valve during testing requires 45 to 60 sec. The valve mechanical design is discussed further in Section 5.4.5.

Modification of containment isolation design has been made in accordance with NUREG-0578, Item 2.1.4, Position 2.b.[1]

The modification of the design was done by

1. Adding a seal-in relay to 31 containment isolation valves. The seal-in relay will deenergize when the isolation signal closes the valve. This will open the seal-in contact and will require operator action to reenergize the relay and to open the valve.

2. Additional isolation signals were added to the control circuit of valves 1804 A and B. This adds diversity to the isolation signal.

Item 1 above revises the valve control circuitry for 31 containment isolation valves. The previous design caused groups of isolation valves to reopen when the signal causing the containment isolation cleared and the operator reset the trip logic by depressing a reset push button. NUREG-0578, Item 2.1.4, requires that ganged controls for reopening isolation valves be eliminated. The modification to the valve controls replaced the previous controls with seal-in circuits, which prevent ganged reopening of isolation valves and require that the operator take deliberate control of each individual valve control switch to reopen the respective valve. All

wiring changes made for this and the following two modifications meet the plant separation criteria for wiring and cable divisions required both inside and between control boards.

Item 2 above (DCR-907 and DCP-1270) added diverse containment isolation trip signals (drywell high pressure refuel floor exhaust high radiation offgas stack high-high radiation, low reactor water level, and reactor building vent exhaust high radiation) to valves 1804 A and B that previously received only one trip signal (reactor vessel low water level). This modification satisfies the NUREG-0578 concern for diversity of containment isolation trip parameters. With this change, all containment isolation valves close on a minimum of two diverse trip conditions.

A keylock switch is provided to allow the containment N_2 supply isolation valve to be opened as directed by Emergency Operating Procedures to provide adequate N_2 supply for SRV and MSIV operations.

7.3.1.1.1.8 Isolation Functions and Settings

The isolation trip settings of the primary containment isolation and NSS shutoff system are listed in Table 7.3-2. The functions that initiate automatic isolation are itemized in Table 7.3-1 in terms of the lines that penetrate the primary containment. This latter table includes all lines of concern for isolation purposes. Although this section is concerned with the electrical control systems that initiate isolation to prevent direct release of radioactive material from the primary containment or nuclear system process barrier, the additional information given in Table 7.3-1 can be used to assess the overall (electrical and mechanical) isolation effectiveness of each system having lines that penetrate the primary containment.

Isolation function and trip settings used for the electrical control of isolation valves in the fulfillment of the previously stated safety design bases are discussed below:

1. Reactor Vessel Low, Low-Low, and Low-Low-Low Water Levels (Table 7.3-1, Signals A, B, and G)

A low water level in the reactor vessel could indicate that either reactor coolant is being lost through a breach in the nuclear system process barrier or that the normal supply of reactor feedwater has been lost and that the core is in danger of becoming overheated as the reactor coolant inventory diminishes. Reactor vessel low water level initiates the closure of various Type A and Type B valves. The closure of Type A valves is intended to either isolate a breach in any of the lines in which valves are open or conserve reactor coolant by closing off process lines.

The closure of Type B valves is intended to prevent the escape of radioactive materials from the primary containment through process lines that are in communication with the primary containment free space.

Three reactor vessel low-water-level isolation trip settings are used to complete the isolation of the primary containment and the reactor vessel. The first reactor vessel low-water-level isolation trip setting, which occurs at a higher water level than the second and third settings, initiates the closure of all Type A and Type B valves in major process lines except RWCU and the main steam lines. RWCU lines remain open in an effort to eliminate unnecessary isolations resulting from scrams not related to RPV low level. The main steam lines are left open to allow the removal of heat from the reactor core. The second and third reactor vessel low-water-level (low-low and low-low-low) isolation trip settings complete the isolation of the primary containment and reactor vessel by initiating the closure of the main steam isolation valves and any other Type A or Type B valves that must be shut to isolate minor process lines.

The first low-water-level setting, which is coincidentally the same as the reactor vessel low-water-level scram setting, was selected to initiate isolation at the earliest indication of a possible breach in the nuclear system process barrier, yet far enough below normal operational levels to avoid spurious isolation. The isolation of the following lines is initiated when reactor vessel low-water-level falls to this first setting (Table 7.3-1, Signal A):

a. RHR system reactor shutdown cooling supply.*

b. Deleted

c. RHR system LPCI to reactor.*

d. Deleted

e. Drywell equipment drain discharge.

f. Drywell floor drain discharge.

g. Containment purge inlet.*

h. Drywell air purge inlet.*

i. Drywell vent.*

j. Drywell vent valve bypass.*

---

*Closed during normal power operation.

k. Suppression chamber air purge inlet.*

l. Suppression chamber vent.*

m. Suppression chamber vent valve bypass.*

n. Reactor building - torus vacuum breaker.*

o. RHR discharge to radwaste.*

p. RHR sample.*

q. Makeup N_2.

r. Drywell N_2 makeup.*

s. Suppression chamber N_2 makeup.*

t. Traversing incore probe tubes.*

u. Traversing incore probe purge.*

v. Drywell atmosphere analyzer suction.

w. Drywell atmosphere analyzer return.

x. Torus atmosphere analyzer suction.

y. Torus atmosphere analyzer return.

z. Mini-purge to reactor recirculation pump seal.

aa. Deleted.

---

*Closed during normal power operation.

ab. Containment N_2 compressor suction.

ac. Instrument N_2 to drywell.

The second and third reactor vessel level isolation settings (low-low and low-low-low) were selected low enough to allow the removal of heat from the reactor for predetermined time following the scram and high enough to complete isolation in time for the operation of RCIC and HPCI systems in the event of a large break in the nuclear system process barrier. These level settings are low enough that partial losses of feedwater supply may not unnecessarily initiate full isolation of the reactor, thereby disrupting normal plant shutdown or recovery procedures. The isolation of the following lines is initiated as follows: d, e and j when water level falls to the low-low setting (Table 7.3-1, Signal B) and a, b, c, f, h, and i when water level falls to the low-low-low setting (Table 7.3-1, Signal G):

a. All four main steam lines.

b. Main steam line drain.

c. Reactor water sample line.

d. RCIC turbine steam supply and exhaust line drain.*

e. HPCI turbine steam supply and exhaust line drain.*

f. Well water inlet and outlet.

g. Deleted

h. Mini-purge to reactor recirculation pump seal.

i. Reactor building closed cooling water inlet and outlet.

j. RWCU inlet/return.

---

*Closure signals for these valves are generated from the secondary interlock signal "E" (Table 7.3-1).

2. Main Steam Line High Radiation (Table 7.3-1, Signal C)

High radiation in the vicinity of the main steam lines could indicate a gross release of fission products from the fuel. High radiation near the main steam lines initiates the isolation of the following lines:

a. Deleted

b. Main steam line drain.

c. Reactor water sample line.

High radiation near the main steam lines also will trip the mechanical vacuum pump, which in turn closes its suction valve from the low and high pressure condenser.

Further information regarding the main steam line high-radiation monitoring is available in Section 11.5.1.

3. Main Steam Line High Flow (Table 7.3-1, Signal D)

A main steam line high flow could indicate a break in a main steam line. The automatic closure of various Type A valves prevents the excessive loss of reactor coolant and the release of significant amounts of radioactive material from the nuclear system process barrier. Upon detection of the main steam line high flow the following lines are isolated:

a. All four main steam lines.

b. Main steam line drain.

c. Reactor water sample line.

The main steam line high flow trip setting was selected high enough to permit the isolation of one main steam line for test at rated power without causing an automatic isolation of the rest of the steam lines, yet low enough to permit early detection of a gross steam-line break.

4. Main Steam Line Space High Temperature (Table 7.3-1, Signal D)

A high temperature in the space in which the main steam lines are located outside of the primary containment could indicate a breach in a main steam line. The automatic closure of various Type A valves prevents the excessive loss of reactor coolant and the release of significant amounts of radioactive material from the nuclear system process barrier. When high temperatures occur in the main steam line space, the following pipelines are isolated:

a. All four main steam lines.

b. Main steam line drain.

c. Reactor water sample line.

The main steam line space high temperature trip is set far enough above the temperature expected during operations at rated power to avoid spurious isolation, yet low enough to provide early indication of a steamline break.

5. Low Steam Pressure at Turbine Inlet (Table 7.3-1, Signal P)

Low steam pressure upstream of the turbine stop valves while the reactor is operating could indicate a malfunction of the pressure regulator in which the turbine control valves or turbine bypass valves open fully.

This action could cause rapid depressurization of the nuclear system. From part-load operating conditions, the rate of decrease of nuclear system saturation temperature could exceed the design rate of change of vessel temperature. A rapid depressurization of the reactor vessel while the reactor is near full power could result in undesirable differential pressures across the channels around some fuel bundles of sufficient magnitude to cause mechanical deformation of channel walls. Such depressurizations, without adequate preventive action, could require thorough vessel analysis or core inspection before returning the reactor to power operation. To avoid the time-consuming requirements following a rapid depressurization, the steam pressure at the turbine inlet is monitored and upon falling below a preselected value with the reactor in the RUN mode initiates the isolation of the following lines:

a. All four main steam lines.

b. Main steam drain line.

c. Reactor water sample line.

The low steam pressure isolation setting was selected far enough below normal turbine inlet pressures to avoid spurious isolation, yet high enough to provide timely detection of a pressure regulator malfunction. Although this isolation function is not required to satisfy any of the safety design bases for this system, this discussion is included here to make the listing of isolation functions complete.

6. Primary Containment (Drywell) High Pressure (Table 7.3-1, Signal F)

High pressure in the drywell could indicate a breach of the nuclear system process barrier inside the drywell. The automatic closure of various containment isolation valves prevents the release of significant amounts of radioactive material from the primary containment. The automatic closure of selected NSS shutoff valves prevents possible addition to the overpressure. Upon detection of a high drywell pressure, the following lines are isolated:

a. RHR system reactor shutdown cooling supply.*

b. Deleted

c. RHR system LPCI to reactor.*

d. Drywell equipment drain discharge.

e. Drywell floor drain discharge.

f. Traversing incore probe tubes.*

g. Traversing incore probe purge.*

h. Containment purge inlet.*

i. Drywell air purge inlet.*

j. Drywell vent.*

* Closed during normal power operation.

k. Drywell vent valve bypass.*

l. Suppression chamber air purge inlet.*

m. Suppression chamber vent.*

n. Suppression chamber vent valve bypass. *

o. Reactor building - torus vacuum breaker.*

p. RHR discharge to radwaste.*

q. RHR sample.*

r. Drywell N_2 makeup.*

s. Suppression chamber N_2 makeup.*

t. Makeup N_2.*

u. Containment N_2 compressor suction.

v. Instrument N_2 to drywell.

w. Drywell atmosphere analyzer suction.

x. Drywell atmosphere analyzer return.

y. Torus atmosphere analyzer suction.

z. Torus atmosphere analyzer return.

aa. HPCI/RCIC exhaust line vacuum breaker**.

ab. Mini-purge to reactor recirculation pump seal.

The primary containment high-pressure isolation setting was selected to be as low as possible without inducing spurious isolation trips.

---

* Closed during normal power operation

** Coincident with HPCI Steamline low pressure.

7. RCIC Equipment Room and Suppression Pool Area High Ambient Temperature and High Differential Temperature (Table 7.3-1, Signal K)

High ambient or differential temperature in the RCIC equipment room or in the suppression pool area could indicate a break in the RCIC steam line. The automatic closure of the RCIC steam-line valves prevents the excessive loss of reactor coolant and the release of significant amounts of radioactive material from the nuclear system process barrier. When any one of the following alarm conditions is sensed, an alarm is actuated in the main control room, and the RCIC steam-line valves are closed:

2016-007

a. High differential temperature between the inlet and outlet channels representative of RCIC equipment room ventilation temperatures.

b. High differential temperature between the inlet and outlet ducts that ventilate the suppression pool area.

c. High ambient temperature in the suppression pool area.

d. High ambient temperature at the RCIC equipment room standby cooler.

If the high ambient or differential temperature in b and c above occurs, isolation does not occur immediately, but a timer is initiated and if the temperature is not reduced below the trip point before the time runs out, the RCIC steam line is isolated. The high ambient temperature and high differential temperature isolation settings were selected far enough above expected normal operational levels to avoid spurious operation, but low enough to provide timely detection of an RCIC turbine steam-line break.

8. RCIC Turbine High Steam Flow (Table 7.3-1, Signal K)

RCIC turbine high steam flow could indicate a large break in the RCIC turbine steam line. The automatic closure of the RCIC steam-line valves prevents the excessive loss of reactor coolant and the release of significant amounts of radioactive materials from the nuclear system process barrier. The RCIC turbine high steam flow trip setting was selected high enough to avoid spurious isolation, that is, above the high steam flow rate encountered during turbine starts. The setting was selected low enough to provide timely detection of an RCIC turbine steam-line break.

Hydraulic snubbers have been added to the RCIC system to preclude spurious isolation of the system due to the pressure spikes that accompany startup steam-flow transients. These snubbers are located in the DP instrument lines of the steam supply line-break

detection differential pressure sensors. The snubbers have been effective in preventing the spurious isolations.

9. RCIC Turbine Steam Line Low Pressure (Table 7.3-1, Signal K)

Low pressure in the RCIC steam line could indicate a break in that line. Therefore, the RCIC steam line isolation valves are automatically closed. The steam line low-pressure function is provided so that in the event a gross rupture of the RCIC steam line occurred upstream from the high-flow sensing location, thus negating the high flow indication function, isolation would be effected on low pressure. The isolation setpoint is chosen at a pressure below which the RCIC turbine can effectively operate.

10. RCIC Turbine Exhaust Diaphragm High Pressure (Table 7.3-1, Signal R)

The RCIC turbine exhaust diaphragm pressure switches are designed to detect a degraded inner diaphragm boundary and isolate the RCIC System before the outer diaphragm is significantly challenged to thermal/cycle fatigue. Although this signal is not considered essential for the purpose of actuating a primary containment isolation, it is included in the Technical Specifications because its failure could prevent RCIC operation.

11. HPCI Equipment Room and Suppression Pool Area High Ambient Temperature and High Differential Temperature (Table 7.3-1, Signal L)

High ambient or differential temperature in the HPCI equipment room or in the suppression pool area could indicate a break in the HPCI system turbine steam line. The automatic closure of the HPCI steam-line valves prevents the excessive loss of reactor coolant and the release of significant amounts of radioactive material from the nuclear system process barrier. When any one of the following alarm conditions is sensed, an alarm is actuated in the main control room, and the HPCI steam-line valves are closed:

a. High differential temperature between the inlet and outlet ducts that ventilate the HPCI equipment room.

b. High differential temperature between the inlet and outlet ducts that ventilate the suppression pool area.

c. High ambient temperature in the suppression pool area.

d. High ambient temperature at the HPCI equipment room standby cooler.

If the high ambient or differential temperature in b and c above occurs, isolation does not occur immediately, but a timer is initiated and if the temperature is not reduced below the trip point before the timer runs out, the HPCI steam line is isolated. The high ambient temperature or high differential temperature isolation settings were selected far enough above expected normal HPCI system operational levels to avoid spurious isolation but low enough to provide timely detection of an HPCI turbine steam-line break.

12. HPCI Turbine High Steam Flow (Table 7.3-1, Signal L)

HPCI turbine high steam flow could indicate a break in the HPCI turbine steam line. The automatic closure of the HPCI steam-line isolation valves prevents the excessive loss of reactor coolant and the release of significant amounts of radioactive materials from the nuclear system process barrier. Upon detection of HPCI turbine high steam flow, the HPCI turbine steam line is isolated. The high steam flow trip setting was selected high enough to avoid spurious isolation, that is, above the high steam flow rate encountered during turbine starts. The setting was selected low enough to provide timely detection of an HPCI turbine steam-line break.

Hydraulic snubbers have been added to the HPCI system to preclude spurious isolation of the system due to the pressure spikes that accompany startup steam-flow transients. These snubbers are located in the ΔP instrument lines of the steam supply line-break detection differential pressure sensors. The snubbers have been effective in preventing the spurious isolations.

13. HPCI Turbine Steam-Line Low Pressure (Table 7.3-1, Signal L)

Low pressure in the HPCI steam-line could indicate a break in that line. Therefore, the HPCI steam-line isolation valves are automatically closed. The steam-line low-pressure function is provided so that in the event a gross rupture of the HPCI steam line occurred upstream from the high-flow sensing location, thus negating the high flow indicating function, isolation would be effected on low pressure. The isolation setpoint is chosen at a pressure below which the HPCI turbine can effectively operate.

14. HPCI Turbine Exhaust Diaphragm High Pressure (Table 7.3-1, Signal Q)

The HPCI turbine exhaust diaphragm pressure switches are designed to detect a degraded inner diaphragm boundary and isolate the HPCI System before the outer diaphragm is significantly challenged to thermal/cyclic fatigue. Although this signal is not considered

essential for the purpose of actuating a primary containment isolation, it is included in the Technical Specifications because its failure could prevent HPCI operation.

15. Reactor Building Ventilation Exhaust High Radiation and Offgas Vent Pipe High-High Radiation (Table 7.3-1, Signal Z).

High radiation in the reactor building ventilation exhaust or in the offgas vent pipe could indicate a breach of the nuclear system process barrier inside the primary containment, which would result in increased airborne radioactivity levels in the primary containment exhaust to the secondary containment. The automatic closure of certain Type B valves acts to close off release routes for radioactive material from the primary containment into the secondary containment (reactor building). Reactor building ventilation exhaust high radiation and offgas vent pipe high-high radiation initiates the isolation of the following lines:

a. Containment purge inlet.*

b. Drywell air purge inlet.*

c. Drywell vent.*

d. Drywell vent valve bypass.*

e. Suppression chamber air purge inlet.*

f. Suppression chamber vent.*

g. Suppression chamber vent valve bypass.*

h. Drywell nitrogen makeup.*

i. Suppression chamber nitrogen makeup.*

j. Makeup nitrogen.

k. Containment N_2 compressor suction.

* Normally closed during normal power operation.

l. Instrument N_2 to drywell.

m. Reactor building - torus vacuum breaker.*

n. Drywell atmosphere analyzer suction.

o. Drywell atmosphere analyzer return.

p. Torus atmosphere analyzer suction.

q. Torus atmosphere analyzer return.

r. Mini-purge to reactor recirculation pump seal.

The high-radiation and high-high radiation trip settings selected are far enough above background radiation levels to avoid spurious isolation, but low enough to provide timely detection of nuclear system process barrier leaks inside the primary containment. Because the primary containment high-pressure isolation function and the reactor vessel low-water-level isolation function are adequate in effecting appropriate isolation of the above lines for gross breaks, the reactor building ventilation exhaust high-radiation and offgas vent pipe high-high radiation isolation functions are provided as redundant methods of detecting breaks in the nuclear system process barrier significant enough to require automatic isolation.

16. RWCU System Equipment Room High Ambient Temperature and High Differential Temperature (Table 7.3-1, Signal W)

High ambient or differential temperature in the RWCU system equipment room could indicate a break in the cleanup system line carrying high-temperature water. When high differential temperature is sensed between the inlet and outlet ducts that ventilate the cleanup system room, or high temperature in the room is sensed, the cleanup system is automatically isolated. The high ambient and differential temperature trip settings are selected high enough to avoid spurious isolation, yet low enough to provide timely detection and isolation of a break in the cleanup system.

* Normally closed during normal power operation.

17. Reactor Water Cleanup System High Differential Flow (Table 7.3-1, Signal J)

High differential flow in the cleanup system is measured by comparing the mass flow of water entering the system to the mass flow of water leaving the system. A high differential could indicate a breach in the cleanup system. The automatic closure of the cleanup system isolation valves prevents excessive loss of reactor coolant and significant amounts of radioactive material. The high differential flow isolation trip setting was selected high enough to avoid spurious isolations, yet low enough to provide timely detection and isolation.

18. RWCU System Nonregenerative Heat Exchanger High Outlet Temperature (Table 7.3-1, Signal N)

High temperature at the outlet of the nonregenerative heat exchanger is used to automatically close the RWCU system isolation valves. This is an operational, not a protective function.

19. Standby Liquid Control System (Table 7.3-1, Signal Y)

The signal indicating that the standby liquid control system is operating is used to automatically close the isolation valves in the reactor water cleanup system. This is to prevent the cleanup system from removing the solution from the reactor inserted from the standby liquid system. This is an operational, not a protective, function.

20. Main Condenser Low Vacuum/Turbine Building High Temperature (Table 7.3-1, Signal X)

Four low vacuum trip switches close the main steam isolation valves in the event that condenser vacuum is reduced to a value low enough to suggest a lack of response of the turbine stop valves to automatically close on a loss of condenser vacuum.

The condenser low vacuum trip initiates the isolation of the following lines:

a. All four main steam lines.

b. Main steam drain line.

c. Reactor water sample line.

7.3.1.1.2 Emergency Core Cooling Systems Instrumentation and Control

The instrumentation and controls for the emergency core cooling systems are identified as the equipment required for the initiation and control of the following:

1. HPCI system.

2. Automatic depressurization system.

3. Core spray system.

4. LPCI (an operating mode of the RHR system).

The equipment involved in the control of these systems includes automatic valves, turbine pump controls, electric pump controls, relief valve controls, and the switches, contacts, and relays that make up sensory logic channels. Certain automatic isolation valves are not included in this description because they are described in Sections 6.3.4 and 7.3.4.

The emergency core cooling systems initiation and control instrumentation can be conveniently broken into two parts, the incident detection circuitry (IDC) and the control instrumentation. The IDC includes those channels that detect a need for core cooling systems operation; the control instrumentation actuates the corresponding trip systems to initiate the proper emergency core cooling systems response.

To ensure the functional capabilities of the emergency core cooling systems during and after earthquake ground motions, the controls and instrumentation for each of the systems are designed as Seismic Category I equipment. A typical actuation logic for the emergency core cooling systems is shown in Figure 7.3-9.

7.3.1.1.2.1 <u>HPCI System Instrumentation and Control</u>

<u>Identification and Physical Arrangement</u>

When actuated, the HPCI system pumps water from either the condensate storage tank or the suppression chamber to the reactor vessel via the feedwater lines. The HPCI system includes one turbine-driven pump, one shaft-driven auxiliary oil pump, one dc motor-driven auxiliary oil pump, one jockey oil pump, one barometric condenser, one barometric condenser dc condensate pump, one barometric condenser dc vacuum pump, automatic valves, control devices for this equipment, sensors, and logic circuitry. The HPCI process diagram is shown as Figure 6.3-1.

Pressure and level switches used in the HPCI system are located on racks in the reactor building. The only operating component of the HPCI system that is located inside the primary containment is one of the two HPCI system turbine steam supply line isolation valves. The rest of the HPCI system control and instrumentation components are located outside the primary containment. Cables connect the sensors to control circuitry in the main control room. The system is arranged to allow a full-flow functional test of the system during normal reactor power operation.

Initiation Signals and Logic

Either reactor vessel low water level or primary containment (drywell) high pressure can automatically start the HPCI system as indicated in Figure 7.3-10, Sheet 1. Reactor vessel low water level is an indication that reactor coolant is being lost and that the fuel is in danger of being overheated. Primary containment high pressure is an indication that a breach of the nuclear system process barrier has occurred inside the drywell.

The scheme used for initiating the HPCI system is shown in Figure 7.3-11. One trip system actuates the HPCI system upon the receipt of a low-water-level signal. The other actuates the HPCI system upon the receipt of high drywell pressure signals. The HPCI trip system is powered by a reliable dc bus.

Instrument settings for the HPCI system controls and instrumentation are listed in Table 7.3-3. The reactor vessel low-water-level setting for HPCI system initiation is selected high enough above the active fuel to start the HPCI system in time both to prevent excessive fuel clad temperatures and to prevent more than a small fraction of the core from reaching the temperature at which fuel rods perforate. The water-level setting is far enough below normal levels that spurious HPCI system startups are avoided. The primary containment high-pressure setting is selected to be as low as possible without inducing spurious HPCI system startup.

Initiation Instrumentation

Reactor vessel low water level is monitored by four indicating-type multicircuit level switches that sense the difference between the pressure due to a constant reference column of water and the pressure due to the actual height of water in the vessel. Two lines, attached to taps above and below the water level on the reactor vessel, are required for the differential-pressure measurement for each pair of switches. The two pairs of lines terminate outside the primary containment and inside the reactor building. They are physically separated from each other and tap off the reactor vessel at widely separated points. (See Figure 5.1-1). These same lines are also used for pressure and water-level instruments for other systems. The level switches for the HPCI system are arranged in pairs; each pair senses level from one pair of lines. Either pair of level switches sensing low water level can initiate the HPCI system. This arrangement ensures

that no single event can prevent HPCI system initiation from reactor vessel low water level. Cables from the level switches lead to the main control room. Temperature compensating columns are used to increase the accuracy of level measurements.

Primary containment pressure is monitored by four nonindicating pressure switches that are mounted on instrument racks outside the drywell, but inside the reactor building. Cables are routed from the switches to the main control room. Pipes that terminate in the reactor building allow the switches to communicate with the drywell interior. The switches are grouped in pairs, similar to the level sensors, and are electrically connected so that no single event can prevent the initiation of the HPCI system due to primary containment high pressure.

Turbine and Turbine Auxiliaries Control

The HPCI system is initiated automatically after the receipt of a reactor vessel low-water-level signal or primary containment high-pressure signal and produces the design flow rate within 30 sec, although the licensing basis LOCA analysis (Section 15.2.1) conservatively assumes that design flow rate is achieved within 45 sec. The controls then function to provide design makeup water flow to the reactor vessel until the amount of water delivered to the reactor vessel is adequate, at which time the HPCI system automatically shuts down. Controls are arranged to allow remote manual startup, operation, and shutdown from the control room.

The HPCI turbine is functionally controlled as shown in Figure 7.3-10, Sheet 3.

An overspeed control limits the turbine speed to its maximum operating level. A control governor receives an HPCI system flow signal and adjusts the turbine steam control valve so that the design HPCI system pump discharge flow rate is obtained. Manual control of the governor is possible in the test mode, but the governor automatically returns to automatic control upon the receipt of an HPCI system initiation signal. Figure 7.3-10, Sheet 3, shows the various modes of turbine control. The flow signal used for automatic control of the turbine is derived from a differential-pressure measurement across a flow element in the HPCI system pump discharge line. The governor controls the position of the hydraulic operator on the turbine control valve which, in turn, controls the steam flow to the turbine. Hydraulic pressure is supplied for both the turbine control valve and the turbine stop valve by the auxiliary dc-powered oil pump during startup and then by the shaft-driven hydraulic oil pump when the turbine reaches operating speed.

The turbine is automatically shut down by tripping the turbine stop valve closed if any of the following conditions are detected:

1. Turbine overspeed.

2. High turbine exhaust pressure.

3. Low pump suction pressure.

4. Reactor vessel high water level.

5. HPCI steam supply line break isolation signal.

6. HPCI steam supply low-pressure isolation signal.

Turbine overspeed indicates a malfunction of the turbine control mechanism. High turbine exhaust pressure indicates a condition that threatens the physical integrity of the exhaust line. Low pump suction pressure warns that cavitation and lack of cooling can cause damage to the pump, which could place it out of service. A turbine trip is initiated for these conditions so that if the causes of the abnormal conditions can be found and corrected, the system can be quickly restored to service. The trip settings are selected far enough from normal values so that a spurious turbine trip is unlikely, but not so close that damage occurs before the turbine is shut down. Turbine overspeed is detected by a standard turbine overspeed mechanical-hydraulic device. Two pressure switches are used to detect high turbine exhaust pressure; either switch can initiate turbine shutdown. One pressure switch is used to detect low HPCI system pump suction pressure.

High water level in the reactor vessel indicates that the HPCI system has performed satisfactorily in providing makeup water to the reactor vessel.

The reactor vessel high-water-level setting that trips the turbine is near the top of the steam separators and is sufficient to prevent gross moisture carryover to the turbine. Two level switches that sense differential pressure are arranged to require that both switches trip to initiate a turbine shutdown.

Upon the receipt of an initiation signal, the auxiliary oil pump starts, providing hydraulic pressure for the turbine stop valve and turbine control valve hydraulic operator. Because there is no flow in the HPCI system, the flow signal will run the control governor to the high-speed stop. As hydraulic oil pressure is developed, the turbine stop valve and the turbine control valve open simultaneously, and the turbine accelerates toward the speed setting of the control governor. As

HPCI system flow increases, the flow signal adjusts the control governor setting so that design flow is maintained.

The control scheme for the turbine auxiliary oil pump is shown in Figure 7.3-10, Sheet 2. The controls are arranged for automatic or manual control. Upon the receipt of an HPCI system initiation signal, the auxiliary oil pump starts and provides hydraulic pressure to open the turbine stop valve and the turbine control valve. As the turbine gains speed, the shaft-driven oil pump begins to supply hydraulic pressure. After about 0.5 min during an automatic turbine startup, the pressure supplied by the shaft-driven oil pump is sufficient, and the auxiliary oil pump automatically stops upon the receipt of a high oil pressure signal. Should the shaft-driven oil pump malfunction, causing oil pressure to drop, the auxiliary oil pump restarts automatically.

The operation of the barometric condenser components--barometric condenser condensate pump (dc), barometric condenser blower (dc), and barometric condenser water-level instrumentation--prevents out-leakage from the turbine shaft seals. The startup of this equipment is automatic, as shown in Figure 7.3-10, Sheets 2 and 3. The failure of this equipment will not prevent the HPCI system from providing water to the reactor vessel.

Valve Control

All automatic valves in the HPCI system are equipped with remote manual test capability, so that the entire system can be operated from the main control room. Motor-operated valves are provided with appropriate limit or torque switches to turn off the motors when the full-open or full-closed positions are reached. Valves that are automatically closed on isolation or turbine trip signals are equipped with remote manual reset devices, so that they cannot be reopened without operator action. The exception to such operator action is that turbine stop and control valves will reopen automatically from reactor high-water-level trip upon the receipt of a low reactor water reinitiation signal. All essential equipment of the HPCI system controls are independent of ac power.

To ensure that the HPCI system can be brought to the design flow rate within 45 sec from the receipt of the initiation signal (as assumed in the licensing basis LOCA analysis (Section 15.2.1), the following maximum operating times for essential HPCI system valves are provided by the valve operating mechanisms:

1. HPCI system turbine steam supply valve, 20 sec.

2. HPCI system injection valve, 30 sec.

3. HPCI system pump minimum flow bypass valve, 10 sec.

The operating time is the time required for the valve to travel from the fully closed to the fully open position, or vice versa. Because the two HPCI system steam supply line isolation valves are normally open and because they are intended to isolate the HPCI system steam line in the event of a break in that line, the operating time requirements for them are based on isolation specifications. These are described in Section 7.3.1.1.1. A normally closed dc motor-operated isolation valve is located in the turbine steam supply line just upstream of the turbine stop valve. The control scheme for this valve is shown in Figure 7.3-10, Sheet 2. Upon the receipt of an HPCI system initiation signal, this valve opens and remains open until closed by operator action from the main control room.

Two normally open isolation valves are provided in the steam supply line to the turbine. The valve inside the drywell is controlled by an ac motor. The valve outside the drywell is controlled by a dc motor. The control diagram is shown in Figure 7.3-10, Sheet 1. Although these valves are normally open, an HPCI system initiating signal opens them if they are closed. However, the initiation signal is overridden, and the valves automatically close upon the receipt of HPCI system turbine steam line high-flow signals, HPCI turbine high exhaust diaphragm pressure signals, HPCI system turbine steam supply low-pressure signals, leak detection temperature or differential temperature signals, or high steam-line space temperature signals.

Key-lock switches are provided to enable the use of the HPCI steam line to depressurize the RPV via operation of the HPCI turbine. Turbine trips for Steam Line Pressure Low, High RPV Water Level and High Ambient/Differential Temperature are also defeated to allow the turbine to be reset under non-steam line break conditions. One of the switches also removes the auto open signal to MO-2238 and a separate switch removes the auto open signal to MO-2239. This allows manual throttling of the valves and thus provides steamline warmup. By warming the steam lines, possible damage is prevented to downstream components from opening the valves with a large differential pressure across the valves.

Separate key-lock switches are provided for RCIC to bypass its respective trips in a similar manner. These overrides are used as required by the Emergency Operating Procedures (EOPs).

Three pump suction shutoff valves are provided in the HPCI system. One valve provides pump suction from the condensate storage tank; the other two are in series and provide suction from the suppression pool. The condensate storage tank is the preferred source of water for the HPCI system. All three valves are operated by dc motors. The control arrangement is shown in Figure 7.3-10, Sheets 1 and 3. Although the condensate storage tank suction valve is normally open, an HPCI system initiation signal opens it if it is closed. If the water level in the condensate storage tank falls to a preselected level, the suppression pool suction valves automatically open. A time delay relay has been added to the HPCI/RCIC suction transfer on low CST level to prevent spurious signals from causing an unnecessary suction transfer from the CST to the

suppression pool. The time delay is set at 2 seconds or less. With this time delay, an actual low level condition would remove an additional 115 gallons (maximum) from the CST with both systems pumping at rated flows prior to the start of the suction transfer. The low CST transfer setpoint corresponds to approximately 12 inches above the bottom of the tank. The additional 115 gallons drawn from the CST during the time delay does not result in a noticeable decrease in suction pressure and therefore the consequences of the time delay are insignificant. The time delay relay is a highly reliable device procured as a class 1E relay. (See Table 7.3-3.) When the suppression pool valves are both fully open, the condensate storage tank suction valve automatically closes. Two level switches are used to detect the condensate storage tank low-water-level condition. Either switch can cause the suppression pool suction valves to open. The suppression pool suction valves also automatically open, and the condensate storage tank suction valve closes if the HPCI suction water level is reached in the suppression pool.

Two level switches monitor the water level in the suppression pool. Either switch can initiate the opening of the suppression pool suction valves. A keylock switch with an amber indicating light for overriding the HPCI Torus High Water Level Transfer is provided for operator actions which are required procedurally during Emergency Operating Procedure (EOP) actions. The override will: 1) remove the high suppression pool water level signal from opening the HPCI suppression pool suction valves, 2) remove the shut signal from the HPCI CST suction unless a CST low level signal is present, 3) light an amber light above the handswitch and 4) annunciate on front panel 1C-14 when in override.

With the handswitch in override, the logic configuration will provide for automatically closing the CST valve on a low CST level if both suppression pool suction valves are full open. With the handswitch in normal, the CST suction valve will close as originally designed, i.e., with both suppression pool suction valves full open. In override, the switch blocks the close signal to the CST suction valve unless the CST low level signal is present. Without this additional function, the CST suction valve would go shut as soon as it reached full open, provided the suppression pool suction valves were open. If open, the suppression pool suction valves automatically close upon the receipt of the signals that initiate HPCI system steam line isolation.

Two dc motor-operated valves in the pump discharge line are provided. The control schemes for these two valves are shown in Figure 7.3-10, Sheet 3. Both valves are arranged to open upon the receipt of the HPCI system initiation signal.

A pump discharge minimum flow bypass is provided to prevent damage by overheating at reduced HPCI system pump flow. The bypass is controlled by an automatic, dc motor-operated valve whose control scheme is shown in Figure 7.3-10, Sheet 3. At HPCI system high flow, the valve is closed; at low flow, the valve is opened except when the HPCI turbine is tripped. A flow switch measures the pressure difference across a flow element in the HPCI system pump discharge line to provide the closure signal for the valve. There is also an interlock

provided to shut the minimum flow bypass whenever the turbine is tripped. This is necessary to prevent the drainage of the condensate storage tank into the suppression pool. A keylock switch with an indicator light is provided to override the close signal to the valve to allow operator action as required by emergency procedures, to be performed readily without the use of jumpers. This provides the ability to quickly fill the Torus in the event of a loss of suppression pool water level.

A condensate drain pot, steamline drain, and appropriate valves are provided in a drain line arrangement just upstream of the turbine supply valve to prevent the HPCI system steam supply line from filling up with water and cooling. The control scheme is shown in Figure 7.3-10, Sheet 2. The control valves are positioned so that during normal operation, steamline drainage is routed to the main condenser. Upon HPCI system initiation, the drainage path is isolated. The water in the steamline drain condensate pot is drained by a steam trap; if the level gets too high, an alarm is activated in the control room. A manual valve is available to bypass condensate around the drain trap if needed.

During test operation, the HPCI system pump discharge can be routed to the condensate storage tank. Two valves, one pneumatic and one DC motor-operated, are installed in the pump discharge test lines. The piping arrangement is shown in Figure 6.3-7. The control scheme for the valves is shown in Figure 7.3-10, Sheet 3. Upon the receipt of an HPCI system initiation signal, the valves close and remain closed. Numerous indications pertinent to the operation and condition of the HPCI system are available to the plant operator. Figure 6.3-7, Sheets 1 and 2 and Figure 7.3-10, Sheet 2, show the various indications provided.

7.3.1.1.2.2 Automatic Depressurization System Instrumentation and Control

Identification and Physical Arrangement

Automatically controlled relief valves are installed on the main steam lines inside the primary containment. The valves are dual purpose in that they will relieve pressure by self-actuating action or by pilot-operated action of an electric-pneumatic control system (see Section 5.2.2). The relief by self-actuating action is intended to prevent overpressurization of the nuclear system. The depressurization by pilot-operated action of the control system is intended to reduce nuclear system pressure during a loss-of-coolant accident (LOCA) in which the HPCI system is not adequate so that the core spray system or LPCI can inject water into the reactor vessel. The automatic control and instrumentation equipment for the relief valves is described in this section. The controls and instrumentation for one of the relief valves are discussed. Other relief valves equipped for automatic depressurization are identical.

The control system, which is functionally illustrated in Figure 7.3-6, Sheet 1, and Figure 7.3-11, consists of pressure and water-level sensors arranged in the trip system that controls a solenoid-operated pilot nitrogen valve. The solenoid-operated pilot valve controls the pneumatic pressure applied to a piston operator that controls the relief valve directly. An accumulator is included with the control equipment to store pneumatic energy for relief valve operation. The accumulator is sized to provide nitrogen for 30 days following the failure of the pneumatic supply to the accumulator, and assuming a maximum system leak rate of 30 standard cm^3/min. Cables from the sensors lead to the main control room where the logic arrangements are formed in cabinets. The electric control circuitry is powered by dc from the plant batteries. The power supplies for the redundant control circuits are selected and arranged to maintain tripping ability in the event of an electric power failure. Electric elements in the control system energize to cause an opening of the relief valve.

2018-010

Pressure indication is provided in the control room from pressure switches located on the safety/relief valve discharge piping. Although the indication provided by the switches is considered a non-safety function, the requirement for reliable indication made it necessary to replace them with new seismically-qualified (Class 1E) switches. The new switches meet Mil-STD-52720 Standard. They are powered from the Class 1E, 125 VDC system and provide indication of relief valve and safety valve position in the Control Room.

Initiation Signals and Logic

Two initiation signals are used for the automatic depressurization system, as follows:

1. Reactor vessel low water level at two distinct setpoints – reactor vessel level – low and low, low, low.

2. Low-pressure standby cooling available (LPCI or core spray).

These initiation signals must be present to cause the relief valves to open. Reactor vessel – low water level indicates that the fuel is in danger of becoming overheated. The reactor vessel – low, low, low water level would normally not occur unless the HPCI system failed.

After the receipt of the initiation signals, and after a 120-sec (nominal) delay provided by self-indicating timers, the solenoid-operated pilot air valve is energized, providing that at least one LPCI or core spray pump is running, allowing pneumatic pressure from the accumulator to act on the piston actuator. The piston actuator is an integral part of the relief valve and acts to hold the relief valve open. Lights in the main control room inform the plant operator whenever the switch controlling the solenoid-operated pilot valve is placed in the OPEN position, indicating that the relief valve has been commanded to open.

A two-position switch is provided in the main control room for the control of the relief valves. The two positions are "open" and "auto." In the open position, the switch energizes the solenoid-operated pilot valve, which allows pneumatic pressure to be applied to the piston actuator of the relief valve. This allows the plant operator to take action independent of the automatic system. The relief valves can be manually opened to provide a controlled nuclear system cooldown under conditions where the normal heat sink is not available. Manual reset circuits are provided for the automatic initiating signals. By manually resetting the initiating signals, the delay self-indicating timers are recycled. The operator can use the reset switch to delay or prevent automatic opening of the relief valves if such delay or prevention is prudent. Manual actuation of one ADS "Reset" button recycles the timer for its trip system. Both timers must be reset to prevent automatic depressurization. Automatic depressurization system initiation can also be prevented by placing the reset switch in the override position (See NUREG-0737, Item II.K.3.18). This will maintain the switch contacts open and prevent the ADS relays from being energized. Both reset switches must be in their override position to prevent ADS initiation.

The logic scheme used for initiating the system is shown in simplified form in Figure 7.3-11 and is a single trip system containing two logics. Each logic can initiate automatic depressurization. The trip system is powered by reliable dc buses. Instrument specifications and settings are listed in Table 7.3-4.

Two pressure switches on the discharge of each core spray and each LPCI pump are arranged to inhibit the automatic depressurization system unless at least one low-pressure cooling pump shows appropriate discharge pressure.

The reactor vessel – low, low, low water level initiation setting for the automatic depressurization system is selected to open the relief valves to depressurize the reactor vessel in time to allow adequate cooling of the fuel by the core spray system and LPCI following a LOCA in which the HPCI system fails to maintain vessel water level. The reactor vessel low water level initiation setting is selected to confirm that water level in the vessel is low to provide protection against inadvertent depressurization should an instrument line fail.

Initiation Instrumentation

The level switches used to initiate the automatic depressurization system are common to each relief valve control circuit. Reactor vessel – low, low, low water level is detected by four switches that measure differential pressure. There are two additional reactor water level switches that perform a permissive function for ADS initiation. These two level switches are activated at a reactor vessel – low water level and sense level from different references legs than the other four level switches and use different reference columns to verify a low water level. As shown in Figure 7.3-11, each switch actuates a contact in the control circuit such that a minimum

of three water-level signals, and two pump-running signals are required to actuate each of the logic circuits.

The 120-sec (nominal) delay time setting of the self-indicating timers in the logic is chosen to be long enough so that the HPCI system has time to start, yet not so long that the core spray system and LPCI are unable to adequately cool the fuel if the HPCI system fails to start. An alarm in the main control room is annunciated every time either of the timers is running. The timers display the time remaining until ADS initiation. Resetting the ADS logic in the presence of tripped initiating signals recycles the timers. The requirement that at least one of the LPCI or core spray pumps be running before automatic depressurization starts ensures that cooling will be available to the core after the reactor system pressure is lowered. Also, an alarm in the main control room is annunciated when the ADS timers have been locked out.

Alarms

A temperature element is installed in a thermowell in the relief valve discharge piping several feet from the valve body. The temperature elements are recorded in the main control room to provide a means of detecting relief valve leakage during plant operation. When the temperature in any relief valve discharge line exceeds a preset value, an alarm is sounded in the main control room. The alarm setting is selected far enough above normal ambient temperature at rated power to avoid spurious alarms, yet low enough to give early indication of relief valve leakage.

7.3.1.1.2.3 Core Spray System Instrumentation Control

Identification and Physical Arrangement

The core spray system consists of two independent spray loops as illustrated in Figure 6.3-8. Each loop is capable of supplying sufficient cooling water to the reactor vessel to adequately cool the core following a design-basis LOCA. The two spray loops are physically and electrically separated so that no single physical event makes both loops inoperable. Each loop includes an ac motor-driven pump, appropriate valves, and the piping to route water from the suppression pool to the reactor vessel. The controls and instrumentation for the core spray system include the sensors, relays, wiring, and valve operating mechanisms used to start, operate, and test the system. The sensors and valve closing mechanisms for the core spray system are located in the reactor building. Cables from the sensors are routed to the main control room where the control circuitry is assembled in electrical panels. Each core spray pump is powered from a different ac bus that is capable of receiving standby power. The power supply for automatic valves in each loop is the same as that used for the core spray pump in that loop. Control power for each of the core spray loops comes from separate dc buses. The electrical

equipment in the main control room for one core spray loop is isolated from that used for the other loop.

Initiation Signals and Logic

The control scheme for the core spray system is illustrated in Figures 6.3-2 and 7.3-12. Trip settings are given in Table 7.3-5. The overall operation of the system following the receipt of an initiating signal is as follows:

1. Test bypass valves are automatically closed and interlocked to prevent opening.

2. If normal ac power is available, the core spray pumps in each loop start with a 5 second time delay. If emergency ac power is available, the core spray pumps in each loop start in accordance with the diesel loading sequence described in Section 8.3.1.

3. When reactor vessel pressure drops to a preselected value, valves open in the pump discharge lines allowing water to be sprayed on the core.

4. When pump discharge flow is indicated, the pump low-flow bypass valves shut, directing full flow into the reactor vessel.

Two initiating functions are used for the core spray system: reactor vessel low ("low-low-low") water level and primary containment (drywell) high pressure. Either initiation signal can start the system. Once initiated, reactor low-pressure signals are used as permissive signals to open the core spray injection valves.

The logic scheme used for initiating each core spray system loop is shown in Figure 7.3-11 and is comprised of one trip system per loop that actuates upon the receipt of sufficient low ("low-low-low") water level signals or upon the receipt of sufficient high drywell pressure signals. Either trip system logic can initiate the core spray loop associated with that trip system. The same sensors actuate the trip systems for loop A and loop B using isolated relay contacts for isolation between trip systems. The trip systems are powered by reliable independent dc buses.

Reactor vessel low ("low-low-low") water level indicates that the core is in danger of being overheated due to the loss of coolant. Drywell high pressure indicates that a breach of the nuclear system process barrier has occurred inside the drywell. The reactor vessel low ("low-low-low") water level and primary containment high-pressure settings and the instruments that provide the initiating signals are selected and arranged so as to ensure adequate cooling for the design-basis LOCA without inducing spurious system startups.

Pump Control

The control arrangements for the core spray pumps are shown in Figure 7.3-12. The circuitry provides for the detection of normal power available, so that all pumps are automatically started in sequence (i.e., a nominal 5 second time delay). Each pump can be manually controlled by a control room remote switch, or by the automatic initiation control system. A pressure transducer on the discharge line from each set of core spray pumps provides a signal in the control room to indicate the successful startup of the pumps. If a core spray initiation signal is received when normal ac power is not available, the core spray pumps start after ac power is available for loading (see Table 8.3-1 for timing sequences). The core spray pump motors are provided with overload protection. Overload relays are applied so as to maintain power as long as possible without immediate damage to the motors or emergency power system.

Valve Control

Except where specified otherwise, the remainder of the description of the core spray system refers to one core spray loop. The second core spray loop is identical. The control arrangements for the various automatic valves in the core spray system are indicated in Figure 6.3-2. All motor-operated valves are equipped with limit and/or torque switches to turn off the valve motor when the valve reaches the limits of movement and provide main control room indication of valve position. Each automatic valve can be operated from the main control room. Valve motors are protected by overload trips. Upon the receipt of an initiation signal, the test bypass valve receives a closing signal and is interlocked shut. The core spray pump discharge valves are automatically opened when nuclear system pressure drops to a preselected value with an initiation signal present; the setting is selected low enough so that the low-pressure portions of the core spray system are not overpressurized, yet high enough to open the valves in time to provide adequate cooling for the fuel. Four pressure switches are used to monitor nuclear system pressure. One-out-of-two taken twice logic initiates the opening of the discharge valves. The full-stroke operating times of the motor-operated discharge valves are selected to be rapid enough to ensure proper delivery of water to the reactor vessel in a design-basis accident. The full-stroke nominal operating times are as follows:

1. Test bypass valve, 40 sec. (standard).

2. Pump suction valve, 60 sec. (standard) (control room handswitch keylocked open).

3. Pump discharge valves, 8 sec. per original design basis up to 18 sec. per current LOCA analysis (See Section 15.2.1).

A flow switch on the discharge of each set of pumps provides a signal to operate the minimum flow bypass line valve for each pump set. When the flow reaches the value required to prevent pump overheating, the bypass valves close directing all flow into the sparger.

Alarms and Indications

Core spray system pressure is monitored by a pressure switch to permit the detection of leakage from the nuclear system into the core spray system outside the primary containment. A detection system is also provided to continuously confirm the integrity of the core spray piping between the inside of the reactor vessel and the core shroud. A differential-pressure switch measures the pressure difference between the top of the core support plate and the inside of the core spray sparger pipe just outside the reactor vessel. Since both core spray spargers are located inside of the core shroud, differential pressure will essentially be due to elevation, provided that there is no piping break. If there is a core spray sparger piping break, this pressure difference will be the pressure drop across the core resulting from interchannel leakage. If integrity is lost, this pressure drop will include the steam separator pressure drop. A decrease in the normal pressure drop initiates an alarm in the main control room. Pressure in each core spray pump suction and discharge line is monitored by a locally mounted pressure indicator to permit the determination of suction head and pump performance.

Flow and pressure measuring instrumentation is connected in each of the core spray pump discharge lines. The instrumentation provides flow and pressure indication in the main control room.

7.3.1.1.2.4 LPCI System Instrumentation and Control

Identification and Physical Arrangement

The LPCI mode is an operating mode of the RHR system that uses pumps and piping that are parts of the RHR system. Because this mode is designed to provide cooling water to the reactor vessel following the design-basis LOCA, the controls and instrumentation for LPCI mode of operation are discussed here. Section 5.4.7 describes the RHR system. Figure 5.4-14 shows the entire RHR system, including the equipment used for LPCI operation. The following list itemizes the essential equipment for which control or instrumentation is required:

1. Four RHR system pumps.

2. Pump suction valves.

3. LPCI-to-recirculation loop injection valves.

The instrumentation for LPCI operation provides inputs to the control circuitry for other valves in the RHR system. This is necessary to ensure that the water pumped from the suppression chamber by the pumps is routed directly to a reactor recirculation loop. These interlocking features are described in this section. The actions of the reactor recirculation loop valves are described in this section because these actions are accomplished to facilitate LPCI operation.

LPCI operation uses two identical pump loops, each loop with two pumps in parallel. The two loops are arranged to discharge water into different reactor recirculation loops. A cross connection exists between the pump discharge lines of each loop to allow the water from one loop to be combined with the water from the other loop prior to being discharged into the recirculation loop and reactor vessel. Additionally, there is a small line, with minimal flow capacity, connecting the loops and the Shutdown Cooling Suction Piping in order to create a differential pressure across the LPCI Inject Check Valves. Figure 5.4-14 shows the locations of instruments, control equipment, and LPCI components relative to the primary containment. Except for the reactor recirculation loop pump valves, the components pertinent to LPCI operation are located outside the primary containment.

The power for the RHR pumps is supplied from ac buses that can receive standby ac power. Motive power for the injection valves used during LPCI operation comes from a common bus that can be automatically connected to alternate standby power sources. Logic power for the LPCI components comes from the dc buses. Redundant trip systems are powered from different dc buses. The use of common buses for some of the LPCI components is acceptable because the LPCI system is a single subsystem. As indicated in Chapter 8, the effect of a single dc power supply failure has been reviewed by the NRC. The NRC has concluded that Emergency Core Cooling System performance with a dc power supply failure is acceptable. Backup is provided by the core spray system since the operation of both the LPCI and core spray systems are arranged independently to accomplish the same objective, that is, provide adequate cooling for the fuel at low nuclear system pressure following a design-basis accident.

LPCI is arranged for automatic operation and for remote manual operation from the main control room. The equipment provided for manual operation of the system allows the operator to take action independent of the automatic controls in the event of a LOCA.

Initiation Signals and Logic

The overall operating sequence for LPCI following the receipt of an initiation signal (see Figure 7.3-13) is as follows:

1. If one of the reactor recirculation loops is ruptured, LPCI instrumentation identifies the damaged loop. (See Figure 7.3-13, Sheets 2 and 2A).

2. The discharge and discharge bypass valves in the undamaged reactor recirculation loop automatically close, and the recirculation pumps are tripped. Analyses have been performed (See Section 15.2.1) that demonstrate that the acceptance criteria of 10CFR50.46 are still met if the recirculation discharge bypass valve remains open in the unbroken (selected) loop.

3. One RHR pump in each loop starts with a short time delay after the standby power source to its respective essential bus is available for loading. The other RHR pump in the loop follows the first one after another time delay. The precise time delays are shown in the loading sequence provided in Table 8.3-1. The pumps take suction from the suppression pool. The valves in the suction paths from the suppression pool are maintained open so that no automatic action is required to line up suction. These valves are provided with key-lock switches.

4. Other RHR valves are automatically closed so that the water pumped from the suppression chamber is routed properly.

5. The RHR service water pumps automatically stop (if running) on LPCI initiation because they are not needed for the LPCI mode of RHR operation. They may be restarted by operator action after 10 min of LPCI operation to provide cooling water for the RHR heat exchangers.

6. When nuclear system pressure has dropped to a value at which the main system pumps are capable of injecting water into the recirculating loops, the LPCI valves connecting to an undamaged recirculation loop automatically open. (See Figure 7.3-13, Sheets 2 and 2A.)

7. LPCI then delivers water to the reactor vessel via the recirculation loop to provide core cooling.

In the descriptions of LPCI controls and instrumentation that follow, Figure 5.4-14, Sheets 1 and 2, can be used to determine the physical locations of sensors. Figure 7.3-13, Sheets 1 through 3A and Figure 7.3-14 can be used to determine the functional use of each sensor in the control circuitry for the various LPCI components. Instrument characteristics and settings are given in Table 7.3-6.

Two automatic initiation functions are provided for the LPCI: reactor vessel low water level and primary containment (drywell) high pressure. Either initiation signal can start the system. Once initiated, reactor low-pressure signals are used as permissive signals to open the LPCI injection valves. Reactor vessel low water level indicates that the fuel is in danger of being

overheated because of an insufficient coolant inventory. Primary containment high pressure is indicative of a break of the nuclear system process barrier inside the drywell.

The logic scheme used for initiating LPCI is shown in Figure 7.3-11. The recirculation loop selection logic is shown in Figure 7.3-13, Sheets 2 and 2A. They comprise two trip systems, each containing logic for LPCI initiation and for recirculation loop selection. The trip systems are powered by reliable independent dc buses. The instruments used to detect reactor vessel low-water-level and primary containment high pressure are the same ones used to initiate the other emergency core cooling systems. Once an initiation signal is received by the LPCI control circuitry, the signal is sealed in until manually reset. The seal-in feature is shown in Figure 7.3-13, Sheets 1 and 1A.

Automatic isolation devices are provided in the LPCI auto-initiation logic circuit. In the event of a fire, auto-initiation of the system could be lost. However, the LPCI system could still be manually activated from the control room.

Pump Control

The functional control arrangement for the pumps is shown in Figure 7.3-13, Sheets 1 and 1A. Once an initiation signal is received, a pump in each loop starts with a short delay after the power becomes available. The other two pumps start shortly thereafter. The time delays are indicated in the loading sequences provided in Table 8.3-1.

The timers provided in the LPCI circuitry from the LPCI valves are capable of adjustment over a range of 1.5 times the design setting listed in Table 7.3-6.

Local pressure indicators and pressure switches that initiate alarms in the main control room are installed in the pump discharge lines upstream of the pump discharge check valves and provide indication of proper pump operation following an initiation signal. Low pressure in a pump discharge line indicates pump failure. The locations of the pressure indicators and switches relative to the discharge check valves prevent the discharge pressure from an operating pump from concealing a pump failure.

To prevent pump damage due to overheating at no flow, the control circuitry prevents a pump from starting unless a suction path is lined up. Limit switches on suction valves provide indications that a suction lineup is in effect. If suction valves change from their fully open position during main system pump operation, the limit switches trip the pump power supply breaker open.

The pump motors are provided with overload protection. The overload relays are applied so as to maintain power on the motor as long as possible without harm to the motor or immediate damage to the standby power system.

The reactor recirculation pumps are tripped automatically upon a LOCA at a vessel water level (464 in. above vessel zero (nominal)) that is higher than that at which LPCI is placed into operation. When a recirculation pump trip signal is initiated, the power supply breakers for the drive motors for the recirculation pump generators are tripped open and the motor-generator set variable speed coupling remains "as is."

Valve Control

The automatic valves controlled by the LPCI control circuitry are equipped with appropriate limit and/or torque switches that turn off the valve operating mechanisms whenever the valves reach the limit of travel and provide main control room indicators of valve positions. Seal-in and interlock features are provided to prevent improper valve positioning during automatic LPCI operation. The operating mechanisms for the valves are selected so that the LPCI operation is in time for the system to fulfill its objective of providing adequate core cooling following a design-basis LOCA. The nominal time for the valves pertinent to LPCI operation to travel from the fully closed to the fully open positions, or vice versa, is as follows:

1. LPCI valves, 18 sec. per original design basis, up to 28 sec. per current LOCA analysis (See Section 15.2.1).

2. Reactor recirculation discharge loop valves, 30 sec.

The pump suction valves from the suppression pool are normally locked open. Two separate operator actions are required in the main control room to shut these valves. Upon the receipt of an LPCI initiation signal, certain reactor shutdown cooling system valves and the RHR system test line valves automatically close, if open. By closing these valves, the pump discharge is properly routed. Also included in this set of valves are the valves that, if not closed, would permit the pumps to take a suction from the reactor recirculation loops, a lineup that is used during normal shutdown cooling system operation. All valve motors are protected by overload trips.

The LPCI is designed for automatic operation following a break in one of the reactor recirculation loops. The LPCI logic is required to open the injection valve to the unbroken recirculation loop and close the recirculation pump discharge and discharge bypass valves in the unbroken recirculation loop. Analyses have been performed (Section 15.2.1) that demonstrate that the acceptance criteria of 10CFR50.46 are still met if the recirculation discharge bypass valve remains open in the unbroken (selected) loop. The control scheme for the LPCI to recirculation loop injection valves is shown in Figure 7.3-13, Sheets 2 and 2A.

One purpose of the injection valve control circuitry is to identify and direct LPCI flow to the undamaged recirculation loop. This is done by comparing the absolute pressure of the two recirculation loops. The broken loop is indicated by a lower pressure than the unbroken loop. The loop with the higher pressure is then used for LPCI. Four indicating-type differential-pressure switches are used in the control circuitry for the injection valves. The differential-pressure switches detect the pressure difference between corresponding risers to the jet pumps in each recirculation loop. The switches are connected in such a way that a one-out-of-two-twice logic is used to positively identify a broken recirculation loop. The differential-pressure switch setting is selected to give the earliest valid indication of a break in a recirculation loop.

Upon the receipt of either a reactor low-level (higher than LPCI pump start level) or a high drywell pressure signal, the LPCI logic senses the recirculation pump operation by means of differential pressure between the suction and discharge of each pump. Four differential-pressure switches are provided across each recirculation pump. The four sensors in each loop are arranged in a one-out-of-two-taken-twice logic. If the logic senses that a pump is not running, the operating pump is tripped off. Stopping this pump is necessary to eliminate the possibility of breaks being masked by the operating recirculating pump pressure. If pump stoppage is ordered, there is next a requirement that reactor vessel pressure drop to a specified value, approximately 900 psig, before the logic will continue. This adjusts the selection time to optimize sensitivity and still ensure that the network is not unnecessarily delayed. There are four separate reactor pressure sensors for this function arranged in a one-out-of-two-taken-twice logic. After the satisfaction of this pressure requirement or if both pumps have indicated that they are running, a time delay of about 2 sec is provided to remove initial perturbations and allow momentum effects to settle. Loop selection is then initiated by means of the differential pressure transmitters/alarm units between the corresponding recirculation loop risers (see Figure 7.3-14). If after approximately a 1/2-sec delay, the pressure in loop A is not indicating greater than loop B, the circuit will provide a signal to shut the loop B recirculation pump discharge and discharge bypass valves and open the LPCI valve to loop B. If recirculation loop A pressure indicates higher than loop B, the recirculation valves in loop A are ordered shut and the LPCI valve to loop A is signaled open. The injection valves will not open, however, until reactor vessel pressure decreases to a value that is below a pre-set reactor pressure (nominally 450 psig, see Table 7.3-6). LPCI flow then enters the vessel when the check valve opens due to LPCI pressure being higher than reactor pressure. The sensing circuit for break detection and valve selection is arranged so that the failure of a single device or circuit will not prevent correct selection of the loop for injection. Notwithstanding the design, the safety analysis (Section 15.2) does a confirmatory analysis assuming the wrong loop is selected. Analyses have been performed (Section 15.2.1) that demonstrate that the acceptance criteria of 10CFR50.46 are still met if the recirculation discharge bypass valve remains open in the unbroken (selected) loop.

2012-006

A timer cancels the LPCI signals to the injection valves after a delay time long enough to permit satisfactory operation of LPCI. The LPCI signal to the injection valves can also be cancelled prior to expiration of the timer via a keylock bypass switch. The cancellation of the signals, either by expiration of the timer or by use of the keylock bypass switch, allows the operator to divert the water for other postaccident purposes. The cancellation of the signals does not cause the injection valves to move.

The manual controls in the main control room allow the operator to open an LPCI valve only if either nuclear system pressure is low or the other injection valve in the same line is closed. These restrictions prevent overpressurization of low-pressure piping. The same pressure switch used for the automatic opening of the valves is used in the manual circuit. Limit switches on both injection valves for each LPCI loop provide the valve position signals required for injection valve manual operation at high nuclear system pressure.

To protect the pumps from overheating at low-flow rates, a minimum flow bypass line, which routes water from the pump discharge to the suppression chamber, is provided for each pair of pumps. A single motor-operated valve controls the condition of each bypass line. The minimum flow bypass valve automatically opens upon sensing low flow in the discharge line from each RHR pump. The valve automatically closes whenever the flow from either of the associated main system pumps is above the low-flow setting. Flow indications are derived from flow switches in the pump discharge lines. Figure 5.4-14, Sheets 1 and 2, show the location of the flow switches.

Figure 7.3-15, Sheet 3, shows the control arrangement for the recirculation loop valves. The recirculation pump, discharge valve, and discharge bypass valve in the undamaged recirculation loop automatically close upon the receipt of a loop injection signal. The valves in the damaged recirculation loop are left open to allow continued depressurization so that LPCI and the core spray system can inject water into the reactor vessel as soon as possible. Analyses have been performed (Section 15.2.1) that demonstrate that the acceptance criteria of 10CFR50.46 are still met if the recirculation discharge bypass valve remains open in the unbroken (selected) loop.

The same arrangement of differential-pressure switches that is used for the LPCI injection valve circuitry to identify a damaged recirculation loop is used for the recirculation loop valve control circuitry. The manual control circuitry for the recirculation loop valves is interlocked to prevent valve opening whenever a LPCI initiation signal is present.

The valves that allow the diversion of water for containment spray are automatically closed upon the receipt of an LPCI initiation signal. The manual controls for these valves are interlocked so that opening the valves by manual action is not possible unless the drywell pressure is above 2 psig and the reactor vessel water level inside the core shroud is above the level equivalent to two-thirds the core height.

A single level switch is used to monitor water level inside the core shroud for each loop set of valves. A key-lock switch in the main control room allows a manual override of the two-thirds core height permissive contact for the containment spray valves.

Sufficient temperature, flow, pressure, and valve position indications are available in the main control room for the plant operator to accurately assess the LPCI operation. Valves have indications of full-open and full-closed positions. Pumps have indications for pump running and pump stopped. Alarm and indication devices are shown in Figure 5.4-14, Sheets 1 and 2, and Figure 7.3-13, Sheets 3 and 3A.

7.3.1.2 Design-Bases Information

7.3.1.2.1 Design-Bases for Primary Containment Isolation

7.3.1.2.1.1 Safety Objective

To provide a timely protection against the onset and consequences of accidents involving the gross release of radioactive materials from the fuel and nuclear system process barriers, the PCI/NSS shutoff system initiates automatic isolation of appropriate lines that penetrate the primary containment whenever monitored variables exceed preselected operational limits.

A gross failure of the fuel barrier would allow the escape of fission products from the fuel. A gross failure of the nuclear system process barrier could allow the escape of gross amounts of reactor coolant. The loss of coolant could lead to overheating and failure of the fuel. For a gross failure of the fuel, the PCI/NSS shutoff system isolates the reactor vessel to contain fission products. For a gross breach in the nuclear primary pressure boundary outside the primary containment, the isolation control system acts to interpose additional barriers (isolation valve plugs) between the reactor and the breach, thus stopping the release of radioactive materials and conserving reactor coolant. For gross breaches in the nuclear system process barrier inside the primary containment, the PCI/NSS shutoff system acts to close off release routes through the primary containment barrier, thus trapping the radioactive material coming through the breach inside the primary containment.

7.3.1.2.1.2 Safety Design Bases

1. The PCI/NSS shutoff system limits the uncontrolled release of radioactive materials to the environs by initiating timely isolation of penetrations through the primary containment structure whenever the values of monitored variables exceed preselected operational limits.

2. The PCI/NSS shutoff system responds correctly to the sensed variable over the expected range of magnitudes and rates of change.

3. To provide assurance that important variables are monitored with precision, an adequate number of sensors are provided for monitoring essential variables that have spatial dependence.

4. To provide assurance that conditions indicative of a gross failure of the nuclear system process barrier are detected with sufficient timeliness and precision, PCI/NSS shutoff system inputs are derived, to the extent feasible and practicable, from variables that are true, direct measures of operational conditions.

5. The time required for the closure of the isolation valves is short, so that the release of radioactive materials and the loss of coolant as a result of a breach of a line outside the primary containment are minimal.

6. The time required for the closure of the main steam isolation valves is not so short that inadvertent isolation of steam lines causes excessive fuel damage or excessive nuclear system pressure. This basis ensures that the main steam isolation valve closure speed is compatible with the ability of the RPS and pressure relief system to protect the fuel and nuclear system process barrier.

7. To provide assurance that the closure of Type A and Type B automatic isolation valves is initiated, when required, with sufficient reliability, the following safety design bases are specified for the systems controlling Type A and Type B automatic isolation valves:

    a. No single failure within the isolation control system prevents isolation action.

    b. Any anticipated intentional bypass, maintenance, calibration, or test operation to verify operational availability will not impair the functional ability of the isolation control system to respond correctly to essential monitored variables.

c. The system is designed for a high probability that when any essential monitored variable exceeds the isolation setpoint, the event results in automatic isolation and will not impair the ability of the system to respond correctly as other monitored variables exceed their trip points.

d. Where a plant condition that requires isolation can be brought on by a failure or malfunction of a control or regulating system, and the same failure or malfunction prevents action by one or more isolation control system channels designed to provide protection against the unsafe condition, the remaining portions of the isolation control system will meet the requirements of safety design bases 1, 2, 3, and 7a.

e. The power supplies for the PCI/NSS shutoff system are arranged so that the loss of one supply cannot prevent automatic isolation when required.

f. The system is designed so that, once initiated, automatic isolation action goes to completion. Return to normal operation after isolation action requires deliberate operator action. This does not apply to signal "K" or "L", or to signal "B" for the HPCI and RCIC steam line drain isolation valves.

g. There is sufficient electrical and physical separation between trip channels monitoring the same essential variable to prevent environmental factors, electrical faults, and physical events from impairing the ability of the system to respond correctly.

h. Earthquake ground motions will not impair the ability of the PCI/NSS shutoff system to initiate automatic isolation.

8. The following safety design bases are specified to ensure that the timely isolation of main steam lines is accomplished, when required, with extraordinary reliability:

a. The motive force for achieving valve closure for one of the two isolation valves in an individual steam line is derived from a different energy source than that for the other valve.

b. At least one of the isolation valves in each of the steam lines does not rely on the continuity of any variety of electrical power for the motive force to achieve closure.

9. To reduce the probability that the operational reliability and precision of the PCI/NSS shutoff system will be degraded by operator error, the following safety design bases are specified for Type A and Type B automatic isolation valves:

   a. Access to all trip settings, component calibration controls, test points, and other terminal points for equipment associated with essential monitored variables is under the control of the main control room operator or supervisory personnel.

   b. The means for bypassing channels, logics, or system components is under the control of the main control room operator. If the ability to trip some essential part of the system has been bypassed, this fact is continuously indicated in the control room.

10. To provide the operator with means independent of the automatic isolation functions to take action in the event of a failure of the nuclear system process barrier, it is possible for the control room operator to manually initiate the isolation of the primary containment and reactor vessel.

11. The following bases are specified to provide the operator with the means to assess the condition of the PCI/NSS shutoff system and to identify conditions indicative of a gross failure of the nuclear system process barrier.

   a. The PCI/NSS shutoff system is designed to provide the operator with information pertinent to the status of the system.

   b. Means are provided for prompt identification of channel and trip system responses.

12. It is possible to check the operational availability of each essential channel, logic, and trip system.

7.3.1.2.2 Design Bases Information for Emergency Core Cooling Systems Instrumentation and Control

7.3.1.2.2.1 Safety Objective

The instrumentation and controls for the emergency core cooling systems initiate appropriate responses from the various cooling systems so that the fuel is adequately cooled under abnormal or accident conditions. The cooling provided by the systems restricts the release of radioactive materials from the fuel by limiting the extent of fuel damage following situations in which reactor coolant is lost from the nuclear systems.

Even after the reactor is shut down from power operation by the full insertion of all control rods, heat continues to be generated in the fuel as radioactive fission products decay. An excessive loss of reactor coolant would allow the fuel temperature to rise, cladding to perforate, and fission products in the fuel to be released. If the temperatures in the reactor were to rise to a sufficiently high value, a metal (zirconium) water reaction could occur, which could release energy. Such a reaction could threaten the integrity of the barriers that are relied on to prevent the uncontrolled release of radioactive materials. The instrumentation and controls for emergency core cooling systems prevent such a sequence of events by actuating core cooling systems in time to limit fuel temperatures to acceptable levels.

7.3.1.2.2.2 Safety Design Bases

1. Typical instrumentation and controls provide precise, reliable, and automatic control of the emergency core cooling systems. To prevent fuel cladding damage or core deformation, the allowable cladding temperature is in accordance with the criteria outlined in Chapter 15.

2. Instrumentation and controls, with precision and reliability, initiate and control the emergency core cooling systems with sufficient timeliness to prevent no more than a small fraction of the core from approaching temperatures at which a gross release of fission products occurs.

3. To meet the precision requirements of safety design bases 1 and 2, the instrumentation and controls respond to conditions that indicate the potential inadequacy of core cooling, regardless of the physical location of the defect causing the inadequacy.

4. To place limits on the degree to which safety is dependent on operator judgment in time of stress, the following safety design bases are specified:

    a. Appropriate response of the emergency core cooling systems is initiated automatically by control systems so that no decision or manipulation of controls is required of plant operations personnel.

    b. Intelligence of the response of the emergency core cooling systems is provided to the operator by main control room instrumentation so that faults in the actuation of safety equipment can be diagnosed.

    c. Facilities for manual actuation of the emergency core cooling systems are provided in the main control room so that operator judgment and action is possible, yet administratively reserved for the remedy of a deficiency in the automatic actuation of the safety equipment.

5. To meet the reliability requirements of safety design bases 1 and 2, the following safety design bases are specified:

   a. No single failure, maintenance, calibration, or test operation prevents the integrated operations of the emergency core cooling systems from providing adequate core cooling.

   b. Any installed means of manually interrupting the availability of the emergency core cooling systems are under the physical control of the main control room operator or other supervisory personnel.

   c. The power supplies for the instrumentation and controls for the emergency core cooling systems are chosen so that core cooling can be accomplished concurrently with a loss of offsite auxiliary ac power.

   d. The physical events that accompany a LOCA do not interfere with the ability of the emergency core cooling systems' instrumentation and controls to function properly.

   e. Earthquake ground motion will not impair the ability of the instrumentation and controls of essential emergency core cooling systems to function properly.

6. To provide the operator with the means to verify the availability of the emergency core cooling systems, it is possible to test the responses of the instrumentation and controls to conditions representative of abnormal or accident situations.

7. In addition to the safety design bases listed above, the emergency core cooling systems network conforms to the IEEE criteria for Nuclear Power Plants Protection Systems (IEEE-279-1971). In case of conflict, IEEE-279 prevails.

7.3.1.3 Final System Drawings

The final drawings for each system are those figures referenced in the text.

7.3.2 ANALYSIS

7.3.2.1 Primary Containment Isolation

The PCI/NSS shutoff system, in conjunction with other protection systems, is designed to provide timely protection against the onset and consequences of accidents involving the gross

release of radioactive materials from the fuel and nuclear system process barriers. It is the objective of Chapter 15 to identify and evaluate postulated events resulting in gross failure of the fuel barriers and the nuclear system process barriers. The consequences of such gross failures are described and evaluated in that chapter.

Design procedures have been to select tentative isolation trip settings that are far enough above or below normal operating levels so that spurious isolation and operating inconvenience are avoided. It is then verified by analysis that the release of radioactive material following postulated gross failures of the fuel and nuclear system process barrier is kept within acceptable bounds. Trip setting selection is based on operating experience and constrained by the safety design basis and the safety analyses.

Chapter 15 shows that the actions initiated by the PCI/NSS shutoff system, in conjunction with other safety systems, are sufficient to prevent releases of radioactive material from exceeding the guide values of published regulations.

Temperatures in the spaces occupied by various steam lines outside the primary containment have spatial dependence and provide inputs to the primary containment and reactor vessel isolation control system. The large number of differential-temperature sensors and their locations in the ventilation ducts of the equipment areas ensure that a significant break will be detected rapidly and accurately.

Chapter 15 evaluates a gross breach in a main steam line outside the primary containment during operation at rated power. The evaluation shows that the main steam lines are automatically isolated in time to prevent a release of radioactive material in excess of the guideline values of published regulations and to prevent the loss of coolant from being great enough to cause fuel cladding damage. These results are true even if the longest closing time of the valve is assumed.

The shortest time in which the main steam isolation valves are capable of closing is 3 sec. The transient resulting from a simultaneous closure of all main steam isolation valves in 3 sec during reactor operation at rated power (assuming direct scram) is less severe than the transient resulting from the closure of the turbine stop valves (which occurs in a small fraction of 1 sec). The RPS is capable of accommodating the transient resulting from the inadvertent closure of the main steam line isolation valve (Chapter 15).

Because essential variables are typically monitored by four channels arranged for physical and electrical independence, and because a dual-trip system arrangement is used to initiate the closure of automatic isolation valves, no single failure, maintenance operation, calibration operation, or test can prevent the system from achieving isolation. An analysis of the

isolation control system shows that the system does not fail to respond to essential variables as a result of single electrical failures such as short circuits, grounds, and open circuits. A single trip system trip is the result of these failures. Isolation is initiated upon a trip of the remaining trip system. For some of the exceptions to the usual logic arrangement, a single failure could result in inadvertent isolation of a line. With respect to the release of radioactive material from the nuclear system process barrier, such inadvertent valve closures are in the safe direction and do not pose any safety problem.

The redundancy of channels provided for all essential variables provides a high probability that whenever an essential variable exceeds the isolation setting, the system initiates isolation. In the unlikely event that all channels for one essential variable in one trip system fail in such a way that a system trip does not occur, the system could still respond properly as other monitored variables exceed their isolation settings.

Interconnection of the protection and control systems is limited so as to assure that safety is not significantly impaired.

The various power supplies used for the isolation system logic circuitry and for valve operation provide assurance that the required isolation can be effected in spite of power failures. If ac power for valves inside the primary containment is lost, dc power is available for the operation of valves outside the primary containment. The main steam isolation valve control arrangement is resistant to both ac and dc power failures. Because both solenoid-operated pilot valves must be deenergized, the loss of a single power supply will neither cause inadvertent isolation nor prevent isolation if required. The logic circuitry for each channel is powered from the separate sources available from the RPS buses or an ac power supply. The loss of a power source here results in a single trip system trip. In no case does a loss of a single power supply prevent isolation when required.

All instruments, valve closing mechanisms, and cables of the isolation control system can operate under the most unfavorable environmental conditions associated with normal operation. The discussion of the effects of rapid nuclear system depressurization on level measurement given in Section 7.2 is equally applicable to the reactor vessel low-water-level switches used in the PCI/NSS shutoff system. The differential temperature, pressure, differential pressure, and level switches, cables, and valve closing mechanisms used were selected with ratings that make them suitable for use in the environment in which they must operate.

The special considerations (treated in the description portion of this section) made for the environmental conditions resulting from a LOCA inside the drywell are adequate to ensure operability of essential isolation components located inside the drywell.

The wall of the primary containment effectively separates adverse environmental conditions that might otherwise affect both isolation valves in a line. The location of isolation valves on either side of the wall decouples the effects of environmental factors with respect to the ability to isolate any given line. The previously discussed electrical isolation of control circuitry prevents failures in one part of the control system from propagating to another part. Electrical transients have no significant effect on the functioning of the isolation control system.

The motive force for closing each main steam line isolation valve is derived from both a source of pneumatic pressure and the energy stored in a spring. Either energy source is capable, alone, of closing the valve. None of the valves relies on continuity of any sort of electrical power to achieve closure in response to essential safety signals. Total loss of the power used to control the valves would result in closure.

Calibration and test controls for pressure and level switches are located on the switches themselves. These switches are located in the turbine building and reactor building. The location of calibration and test controls in areas under the control of the plant operator or supervisory personnel reduces the probability that operational reliability will be degraded by operator error.

7.3.2.2 Emergency Core Cooling System Instrumentation and Control

In Chapter 15 and in Chapter 6 the individual and combined capabilities of the emergency core cooling systems are evaluated. The control equipment characteristics and trip settings described in this section were considered in the analysis of the performance of the emergency core cooling systems. For the entire range of nuclear process system break sizes, the cooling systems are effective both in preventing excessive fuel clad temperature and in preventing more than a small fraction of the reactor core from reaching the temperature at which a gross release of fission products can occur. This conclusion is valid even with significant failures in individual cooling systems because of the overlapping capabilities of the emergency core cooling systems.

Instrumentation for the emergency core cooling systems responds to the potential inadequacy of core cooling regardless of the location of a breach in the nuclear system process barrier. The reactor vessel low ("low-low")-water level initiating function, which alone can actuate HPCI and RCIC and low ("low-low-low")-water level which can actuate LPCI and core spray, meets this safety design basis because a breach in the nuclear system process barrier inside or outside the primary containment is sensed by the low-water-level detectors. Because of the isolation responses of the primary containment and reactor vessel isolation control system to a breach of the nuclear system outside the primary containment, the use of the reactor vessel low-water-level signal as the only emergency core cooling systems initiating function that is completely independent of breach location is satisfactory. The other major initiating function, primary containment high pressure, is provided because the primary containment and reactor

vessel isolation control system may not be able to isolate all nuclear system breaches inside the primary containment. The primary containment high-pressure initiating signal for the emergency core cooling systems provides a second reliable method for sensing losses of coolant that cannot necessarily be stopped by isolation valve action. This second initiating function is independent of the physical location of the breach within the drywell. This initiating function alone can actuate HPCI, LPCI, and core spray.

The automatic depressurization system is initiated by a reactor vessel low-low-low-water-level signal and a concurrent signal that a core spray pump or an RHR (LPCI) pump is running. The ADS logic includes a 120-sec (nominal) delay after receipt of the coincident signals before ADS actuation to allow time for the automatic blowdown to be bypassed manually if the operator believes that the signals are erroneous or if the water level can be restored. A self-indicating timer on the front panel in the Control Room provides indication to the operator of the time remaining prior to initiation of ADS. The operator also has the capability to manually inhibit ADS operation.

An evaluation of the controls for the emergency core cooling systems shows that no operator action beyond the capacity of the operator is required to initiate the correct responses for those systems.

The redundancy provided in the design of the control equipment for the emergency core cooling systems is consistent with the redundancy of the cooling systems themselves. The arrangement of the initiating signals, which come from common sensors, for these systems is similar to that provided by the dual-trip system arrangement of the RPS. No failure of a single initiating sensor channel can prevent the start of the cooling systems. The numbers of control components provided in the design for individual cooling systems components is consistent with the need for the controlled equipment. An evaluation of the control scheme for each emergency core cooling system component shows that no single control failure can prevent the combined cooling systems from providing the core with adequate cooling. In performing this evaluation, the redundancy of components and cooling systems was considered. The functional control diagrams provided with the descriptions of the controls of the cooling systems were used in assessing the functional effects of instrumentation failures. In the course of the evaluation, protection devices that can interrupt the planned operation of cooling system components were investigated for the results of their normal protective action, as well as for maloperation, on core cooling effectiveness. The only protection devices that can act to interrupt planned emergency core cooling systems operation are those that must act to prevent complete failure of the component or system. Examples of such devices are the HPCI system turbine overspeed trip, HPCI system steam-line break isolation trip, pump trips on low suction pressure, and automatically controlled minimum flow bypass valves for pumps. In every case the action of a protection device cannot prevent other redundant cooling systems from providing adequate cooling to the core.

The locations of controls where the operation of the components of the emergency core cooling systems can be adjusted or interrupted have been surveyed. Controls are located in areas under the surveillance of operations personnel. Local control switches are of the key-lock type, and main control room override of local switches is provided. Other controls are located in the main control room and are under the supervision of the plant operator.

Certain emergency core cooling system circuits have key locked, manual transfer switches and control switches associated with the alternate shutdown capability system. In the case of plant shutdown from outside the control room due to fire, these switches are used to isolate the control room from the circuitry and to control plant shutdown cooling during that period of time when the control room controls are not usable.

The environmental capabilities of instrumentation for the emergency core cooling systems are discussed in the descriptions of the individual systems. Components that are located inside the primary containment and that are essential to the performance of the emergency core cooling systems are designed to operate in the environment resulting from a LOCA (radiation, pressure, temperature, and steam atmosphere).

Special consideration has been given to the performance of reactor vessel water level and pressure sensors, temperature equalizing columns, and condensing chambers during rapid depressurization of the nuclear system. The discussion of this consideration is included in Section 7.2 and is equally applicable to the instrumentation for the emergency core cooling systems.

7.3.3 INSTRUMENTATION

Sensors providing inputs to the primary containment isolation and NSS shutoff system are not used for the automatic control of process systems, thus separating the functional control of protection systems and process systems. Channels are physically and electrically separated to ensure that a single physical event cannot prevent isolation. Channels for one monitored variable that are grouped near to each other provide inputs to different isolation trip systems.

Reactor vessel low-water-level signals are initiated from indicating-type differential-pressure switches that sense the difference between the pressure due to a constant reference column of water and the pressure due to the actual water level in the vessel. One contact on each of four switches is used to indicate that water level has decreased to the first (or higher) of the low-water-level isolation settings; a second contact on each of the four is used to indicate that water level has decreased to the second (or lower) of the two low-water-level isolation settings. Two lines, attached to taps above and below the water level on the reactor vessel, are required for the differential-pressure measurement for each pair of switches. The two

pairs of lines terminate outside the primary containment and inside the reactor building; they are physically separated from each other and tap off the reactor vessel at widely separated points. The reactor vessel low-water-level switches sense level from these lines. This arrangement ensures that no single physical event can prevent isolation. Cables from the level sensors are routed to the main control room. Temperature compensating columns are used to increase the accuracy of the level measurements (see Figure 5.1-1, Sheet 2).

Main steam line radiation is monitored by four radiation monitors, which are described in Chapter 11.

High flow in each main steam line is sensed by four indicating-type differential-pressure switches that sense the pressure difference across the flow restrictor in that line. Figure 7.3-16 illustrates how the 16 differential-pressure switches are combined to form four logic channels. Figure 7.3-17 shows a typical arrangement for main steam line break detection by flow measurement. Each main steam line isolation logic receives an input signal from each main steam line. (see Figure 7.3-6, Sheet 2).

High temperature in the vicinity of the main steam lines is detected by 16 resistance temperature detectors (RTD) located along the main steam lines in the main steam line tunnel, a thermocouple located in the main steam line tunnel high vent outlet, and two thermocouples, one each located in the main steam line tunnel high vent outlet and inlet. In addition, eight RTDs are located in the vicinity of the main steam lines outside the main steam tunnel, four near the turbine stop valves, and four near the steam tunnel. The detectors are located or shielded so that they are sensitive to air temperature and not the radiated heat from hot equipment. The temperature sensors located in the main steam line tunnel high vent outlet and inlet activate an alarm at high temperature and, upon loss of power, operate to give the alarm condition. The RTDs sense main steam line tunnel ambient temperatures and feed remotely located temperature transmitters, indicators, and electronic switches. The main steam lines are isolated on high ambient temperature in the main steam line tunnel or high ambient temperature in the turbine building in the vicinity of the main steam lines. The four instrument channels (RTDs) from each main steam line are combined into one logic channel. A total of four main steam line space high-temperature logic channels are provided.

Accessibility to these switches during plant operation permits periodic testing of the logic.

Main steam line low pressure is sensed by four force balance type pressure switches that sense pressure downstream of the outboard main steam isolation valves. The sensing point is located at the header that connects the four steam lines upstream of the turbine stop valves. Each switch is part of an independent channel and each channel provides a signal to one isolation logic.

Primary containment pressure is monitored by four nonindicating pressure switches that are mounted on instrument racks outside the drywell. Lines that terminate in the reactor building connect the switches with the drywell interior. Cables are routed from the switches to the main control room. The switches are grouped in pairs, physically separated, and electrically connected to the isolation control system so that no single event will prevent isolation due to primary containment pressure.

2016-007 High differential temperature in the RCIC equipment room is sensed by two differential-temperature recorder channels. The exhaust air temperature is compared with the temperature of the air in the HPCI/RCIC room hallway. High ambient temperature is also sensed at the standby cooler by two temperature recorder channels. One channel for the ventilation ducts and one channel for the standby cooler form a trip system. A trip of either channel will initiate an alarm in the main control room and will initiate RCIC steam line isolation. The two logic channels are not divisionalized. However, they are physically and electrically separated from the HPCI steam leak detection logic. As it is not practical to maintain both physical diversity between the HPCI and RCIC systems and physical diversity between Divisions I and II of the leak detection logic, maintaining physical diversity between HPCI and RCIC logics was judged to be preferable to maintaining physical diversity between the two divisions of RCIC logic. This configuration is permitted because the temperature sensors are equipped with burnout protection devices which activate the logic in an open circuit. Figure 7.3-20 illustrates the arrangement. All RCIC isolation functions and their arrangements are shown in detail in Figures 5.4-9 and 5.4-11.

High flow in the RCIC turbine steam line is sensed by two differential- pressure switches, each of which monitors the differential pressure across an elbow installed in the RCIC turbine steam supply line. The arrangement is illustrated in Figure 7.3-18. The tripping of either switch initiates the isolation of the RCIC turbine steam line.

Low pressure in the RCIC turbine steam line is sensed by four pressure switches from the RCIC turbine steam line upstream of the isolation valves. The switches are arranged as two trip systems, both of which must trip to initiate the isolation of the RCIC turbine steam line. Each trip system receives inputs from two pressure switches, either one of which can trip the trip system.

High pressure in the RCIC turbine exhaust diaphragm assembly is indicative of a degraded inner diaphragm boundary. A shutdown of the system automatically results to ensure the outer diaphragm is not significantly challenged to thermal/cyclic fatigue (see Figure 7.3-19). High pressure downstream from the rupture disk is sensed by four pressure switches. Each set is arranged as two trip systems. Each trip system receives input signals from two pressure trip channels, and both trip channels must trip to initiate isolation.

When a reactor high-water level condition exists during RCIC operation, a signal is sent to trip the RCIC turbine steam supply valve. This prepares the system for the RCIC automatic reset that occurs following a high vessel water level trip. A RCIC high vessel level annunciation on the RCIC annunciator panel alarms when this condition exists.

High ambient temperature in the suppression pool area is sensed by four temperature elements with four temperature recorder channels. Vent air inlet and outlet high differential temperatures in the suppression pool area is sensed by eight temperature elements with each set of inlet and outlet temperature elements having a differential-temperature recorder channel. The tripping of any one channel will initiate a timer and an alarm in the main control room. The RCIC steam line is isolated when the timer runs out, unless the trip signal is removed before the time runs out.

High differential temperature between the HPCI equipment room inlet/outlet ventilation ducts is sensed by two differential-temperature recorder channels. High ambient temperature is also sensed at the standby cooler by two temperature recorder channels. One channel for the ventilation ducts and one channel for the standby cooler form a trip system. A trip of either channel will initiate an alarm in the main control room and will initiate HPCI steam line isolation. The two logic channels are not divisionalized. However, they are physically and electrically separated from the RCIC steam leak detection logic. As it is not practical to maintain both physical diversity between the HPCI and RCIC systems and physical diversity between Divisions I and II of the leak detection logic, maintaining physical diversity between HPCI and RCIC logics was judged to be preferable to maintaining physical diversity between the two divisions of HPCI logic. This configuration is permitted because the temperature sensors are equipped with burnout protection devices which activate on an open circuit. Figure 7.3-20 illustrates the arrangement. The same suppression pool area space and differential-temperature sensing system mentioned for the RCIC system is used for the HPCI system. All HPCI isolation functions and their arrangements are shown in detail in Figures 6.3-7 and 7.3-10.

High flow in the HPCI turbine steam line is sensed by two differential- pressures switches, each of which monitors the differential pressure across an elbow installed in the HPCI turbine steam line. The arrangement is illustrated in Figure 7.3-18. The tripping of either switch initiates the isolation of the HPCI turbine steam line.

Low pressure in the HPCI turbine steam line is sensed by four pressure switches from the HPCI turbine steam line upstream of the isolation valves. The switches are arranged as two trip systems, both of which must trip to initiate the isolation of the HPCI turbine steam line. Each trip system receives inputs from two pressure switches, either one of which can trip the trip system. Figure 6.3-7 illustrates this arrangement.

High Pressure in the HPCI turbine exhaust diaphragm assembly is indicative of a degraded inner diaphragm boundary. A shutdown of the system automatically results to ensure the outer diaphragm is not significantly challenged to thermal/cyclic fatigue. (see Figure 7.3-19). High pressure downstream from the rupture disk is sensed by four pressure switches. Each set is arranged as two trip systems. Each trip system receives input signals from two pressure trip signals. Both trip channels must trip to initiate isolation.

There are no temperature sensors associated with high-flow differential- pressure switches in the HPCI or RCIC rooms. Temperature sensors are located in the outlet of the emergency area coolers in the HPCI and RCIC rooms in order to detect high room temperature resulting from steam leakage from the RCIC and HPCI steam lines in these rooms. These locations reduce the probability of an inadvertent isolation due to direct steam impingement on a sensor. Because there are no steam lines other than the HPCI steam lines in the HPCI room, and no steam lines other than the RCIC steam lines in the RCIC room, spurious isolation of HPCI or RCIC cannot result from failures of other system lines in these rooms. A four-by-four array of temperature sensors are located above the main steam lines in the steam tunnel. These sensors will isolate the main steam lines only. To eliminate inadvertent isolation of the main steam lines due to a sensor being impinged upon by a small steam leak in a main steam line, HPCI steam line, or RCIC steam line, which also pass through the steam tunnel, the control logic is such that two sensors, each located above non-adjacent main steam lines, must sense high temperature in order to cause main steam line isolation.

Reactor building ventilation exhaust radiation is monitored by two sets of reactor building ventilation exhaust monitors, which are described in Section 11.5. Each monitoring trip channel provides one input to each applicable isolation trip system. The channels are arranged so that any one of the channels can initiate isolation.

High differential flow in the RWCU system is sensed by a differential-flow switch. Flow from the reactor is sensed and compared with the sum of the flows returning to the feedwater line and to the condenser or the waste collector surge tank. This arrangement is shown in Figure 7.3-21. The tripping of the differential-flow switch will initiate the isolation of the cleanup system.

High differential temperature in the RWCU system equipment room is sensed by six differential-temperature recorder channels. High ambient temperature in the RWCU system equipment room is sensed by six temperature recorder channels. The tripping of either channel initiates the isolation of the cleanup system. The basis for this setting was so that a small leak of 8 to 10 gpm would be detected. Additionally, high ambient temperature in the southeast reactor building first floor is sensed by four temperature recorder channels. Two thermocouples are located above the TIP room mezzanine and two are located above the CRD master control area

for detection of a leak in the RWCU return piping above the TIP room. These arrangements are illustrated in Figure 7.3-22.

High space temperature and vent air inlet and outlet differential temperature in the space occupied by the RHR reactor shutdown cooling supply piping outside primary containment are sensed by temperature recorder channels that activate alarms only, indicating possible pipe breaks. The basis for this setting is to prevent exceeding ambient temperature limits for electronic equipment in the RHR room. Automatic isolation on high temperature is not required since the reactor vessel low-water-level isolation function is adequate in preventing the release of significant amounts of radioactive material in the event that this system suffers a breach. These isolation functions are not Engineered Safeguards Features, thus, divisionalization of channels outside of the Class 1E/non-Class 1E interface is not required (See NEDO-10139).

High outlet temperature from the RWCU system nonregenerative heat exchanger is sensed by one temperature switch. This switch trips one channel, which initiates isolation of the cleanup system to protect the cleanup resin from overtemperature. This is an operational, not a protective, function.

Channel and logic relays are high-reliability relays equal to Type HFA relays made by GE. The relays are selected so that the continuous load will not exceed 50% of the continuous duty rating.

7.3.3.1 Containment Isolation Monitoring System

The Containment Isolation Monitoring system is a non-safety system used to monitor isolation group valve, damper and fan positions or status for operator information. When a group's isolation actuation logic, described in Section 7.3.1.1.1.5, has initiated, the system energizes a display on the Containment Isolation Status Panel to indicate the logic initiation. When the isolation group's valves and/or dampers move to the isolation position, the system will energize a group isolation display corresponding to the logic initiation display to indicate successful completion of isolation for that group. If all valves and/or dampers do not complete their isolation functions, the group isolation display is not energized and the system prints a list of the valves and dampers not in the isolation position.

If any valve or damper in a group has manual override to the isolation signal, an override display will be energized to indicate the manual override, and the group “isolation initiated” indication will remain on as long as the isolation logic is not reset and the group “isolation completed indication will extinguish, since the isolation is no longer complete. The system meets the design and qualification criteria for USNRC Regulatory Guide 1.97, Rev 2, Category 1 instrumentation and satisfies DAEC’s commitment for providing post-event reconstruction for containment isolation as described in Generic Letter 83-28, Item 1.2.

7.3.4 TESTS AND INSPECTION

7.3.4.1 Primary Containment Isolation and NSS Shutoff System

The PCI/NSS shutoff system is testable during reactor operation. Isolation valves can be tested to ensure that they are capable of closing by operating manual switches in the main control room and observing the position lights and any associated process effects. The channel and trip system responses can be functionally tested by applying test signals to each channel and observing the trip system response. The testing of the main steam line isolation valves is discussed in Section 5.4.5.

7.3.4.2 Emergency Core Cooling Systems

Components required for HPCI, ADS, core spray, and LPCI are designed to allow functional testing during normal power operation. During overall functional tests, the operability of the valves, pumps, turbines, and their control instrumentation can be checked. The relief valves are subjected to tests during shutdown or system maintenance periods. Logic circuitry used in the controls for the emergency core cooling systems can be individually checked by applying test or calibration signals to the sensors and observing trip system responses. Valve and pump operations from manual switches verify the ability of breakers and valve closing mechanisms to operate. The automatic control circuitry for the emergency core cooling systems is arranged to restore each of the cooling systems to normal operation if a LOCA should occur during test operations. However, certain surveillance tests of the emergency core cooling systems require manual override of the automatic circuitry and, following such tests, the system must be restored manually to automatic control.

7.3.4.3 Test Provisions and Procedures

1. General Test Methods for DAEC NSSS Instrument Status

    a. Provisions are made for functional testing of RPS and engineered safety feature systems without requiring shutdown or unscheduled power change as a condition of the test. Tests do not impair the functional capability of the system, that is, redundant subsystems are not tested simultaneously.

    b. Testing is accomplished without disturbing the existing wiring. (Lifting of wires from terminals is not considered an acceptable method of test; pulling of fuses is acceptable.)

c. The use of clip-leads is acceptable if the temporary connections to the circuit are administratively controlled and of short duration.

d. Test jacks, permanently wired to existing circuitry, are provided for the reactor protection, core cooling, and RCIC systems. The connection points are so chosen that no portion of the installed protective wiring is untestable and external equipment connected to the test jacks is a conspicuous departure from normal conditions.

e. Permanently wired test lights are provided. The installation is not capable of producing an unsafe failure through any malfunction of the lamp.

Although these General Test Methods are normally followed, especially during the design process (see Reference 2), there are cases where deviations from these provisions may occur, either because of system design considerations or because of more recent regulatory/industry guidance. For example, the use of test jacks is no longer considered acceptable during the performance of Logic System Functional Testing (see Reference 3). Also, while the use of jumpers and lifted leads is minimized, their use is deemed acceptable, provided the guidelines of NRC Information Notice IN 84-37 are followed (see Reference 4).

2. Emergency Core Cooling Systems

The core spray system instrumentation and control system is testable via several separate tests which, when combined, serve to test the entire safety-related logic. Appropriate indicating lights are provided at the relay panels for the indication of the test status. Any key-lock switch in the test or trip position will actuate an annunciator in the control room. These tests are accomplished both on-line and off-line as follows:

a. On-line:

1. The logic is tested by inserting a test switch assembly connector into the receptacle at the system relay panel, channel A. The insertion of the connector annunciates in the control room and prevents the inadvertent startup of the diesel and the LOOP-LOCA load shed.

2. A simulated high drywell pressure signal and a simulated low reactor water level signal are applied by rotating the test switch to complete the logic circuit. The system “auto-start” signal opens the closed inject valve, starts the pump if pump bus power is available, and actuates an annunciator in the control room. Water is pumped from the suppression pool through bypass piping and returns to the suppression pool. The

sealed-in auto-start signal requires resetting from the main control room. The test switch is removed and the other closed inject valve is then subjected to an open signal from the initiation logic.

3. The logic is also tested by applying simulated LOCA signals (i.e., drywell pressure and reactor water level) and reactor pressure signals to portions of the logic while observing relay contact positions, indicating light status and annunciation in the main control room.

b. Off-line:

1. The logic is tested by inserting a test switch assembly connector into the receptacle at system relay panels, channel A. The insertion and subsequent operation of the connector annunciates in the control room and simulates a LOOP-LOCA signal which causes a startup of the diesel, PCIS isolations, the LOOP-LOCA load shed and sequencing (timer circuit verification is performed during this test) of Core Spray and Residual Heat Removal pump starts.

c. Channel A is inoperative during testing with channel B for standby.

d. Channel B is testable similarly with channel A for standby.

e. The other emergency core cooling systems have instrument and control testability functionally similar to the core spray system. This includes the LPCI automatic depressurization, and HPCI systems.

3. The RPS has five modes of testing as described in Section 7.2.

4. The PCI/NSS shutoff systems are tested as described in this section and in Section 5.4.5.

5. The standby gas treatment system is tested as described in Section 6.5.

6. The standby ac power supply is tested as described in Section 8.2.

7. The RPS and the engineered safety feature systems initiating logic circuits and the input sensors to these circuits are designed to IEEE-279-1971 standards of testability. The systems also meet the testability requirements of IEEE Standard 338-1971.

7.3.5 ENVIRONMENTAL CONSIDERATIONS

7.3.5.1 Primary Containment Isolation and NSS Shutoff System

The physical and electrical arrangement of the PCI/NSS shutoff system was selected so that no single physical event will prevent isolation. The location of Type A and Type B valves inside and outside the primary containment provides assurance that the control system for at least one valve on any line penetrating the primary containment will remain capable of automatic isolation. Electrical cables for isolation valves in the same line are routed separately. Motor operators for valves inside the primary containment are of the totally enclosed type; those outside the primary containment have weatherproof-type enclosures. Solenoid valves, whether used for direct valve isolation or as an air pilot, are provided with watertight enclosures. All cables and operators are capable of operation in the most unfavorable ambient conditions anticipated for normal operations. Temperature, pressure, humidity, and radiation are considered in the selection of equipment for the system. Cables used in high-radiation areas have radiation-resistant insulation. Shielded cables are used where necessary to eliminate interference from magnetic fields.

Special consideration has been given to isolation requirements during a LOCA inside the drywell. Components of the PCI/NSS shutoff system that are located inside the primary containment and that must operate during a LOCA are the cables, control mechanisms, and valve operators of isolation valves inside the drywell. These isolation components are required to be functional in a LOCA environment.

Electrical cables are selected with insulation designed for this service. Closing mechanisms and valve operators are considered satisfactory for use in the isolation control system only after the completion of environmental testing under simulated LOCA conditions or the submission of evidence from the manufacturer describing the results of suitable prior tests.

Verification that the isolation equipment has been designed, built, and installed in conformance to the specific criteria is accomplished through quality control and performance tests in the vendor's shop or after installation at the plant before startup, during startup, and thereafter during the service life of the equipment.

7.3.5.2 HPCI System

The only HPCI system control component located inside the primary containment that must remain functional in the environment resulting from a LOCA is the control mechanism for the inboard isolation valve on the HPCI system turbine steam line. The environmental capabilities of this valve are discussed in Section 7.3.1.1.1. The design of the HPCI system

instruments and control equipment located outside the primary containment has taken into consideration the normal and accident environments in which it must operate.

7.3.5.3 Automatic Depressurization System

The signal cables, solenoid valves, relief valve operators, nitrogen accumulators, and inlet check valves are the only items of the control and instrumentation equipment of the automatic depressurization system that are located inside the primary containment and must remain functional in the environment resulting from a LOCA. These items are selected with capabilities that permit proper operation in the most severe environment resulting from a design-basis LOCA. Gamma and neutron radiation is also considered in the selection of these items. Other equipment, located outside the drywell, has taken into consideration the normal and accident environments in which it must operate.

7.3.5.4 Core Spray System

There are no control and instrumentation components for the core spray system that are located inside the primary containment that must operate in the environment resulting from a LOCA. All components of the core spray system that are required for system operation are outside the drywell and have taken into consideration the normal and accident environments in which they must operate.

7.3.5.5 LPCI System

The only control components pertinent to LPCI operation that are located inside the primary containment that must remain functional in the environment resulting from a LOCA are the cables and valve closing mechanisms for the recirculation loop isolation valves. The cables and valve operators are selected with environmental capabilities that ensure valve closure under the environmental conditions resulting from a design-basis LOCA. Because the motor-operator to the recirculation discharge bypass valve may not be qualified for the full LOCA environment, an analysis was performed (Section 15.2.1) that demonstrates that the acceptance criteria of 10CFR50.46 are still met if the discharge bypass valve remains open in the unbroken (selected) loop. Gamma and neutron radiation is also considered in the selection of this equipment. Other equipment, located outside the drywell, is selected in consideration of the normal and accident environments in which it must operate.

REFERENCES FOR SECTION 7.3

1. Letter from Larry D. Root, Iowa Electric, to Harold R. Denton, NRC, Subject: Implementation of "Category A" and "Category B" Requirements of NUREG-0578, dated January 3, 1980.

2. APED 22A3007

3. NRC Inspection Report IR 87-04, dated July 24, 1987.

4. Letter from A. Cappucci, NRC, to L. Liu, Iowa Electric, dated August 13, 1987.

5. Deleted.

Table 7.3-1

Sheet 1 of 20

PROCESS PIPELINES PENETRATING PRIMARY CONTAINMENT[a]

Line Isolated	Drywell Penetration	Valve Type[b]	Valve Number	Power to Open (5) (6)	Grp. (16)	Location Ref. to Drywell[b]	Power to Close (5) (6)	Isolation Signal (17)	Normal Status (10)	Remarks and Exceptions
Main steam (A-D)	X-7	AO globe	4412, 15, 18, 20	N_2 & ac, dc	A	Inside	N_2 & spring	G, D, P, X	Open	Notes 1, 19, 22
Main steam line (A-D)	X-7	AO globe	4413, 16, 19, 21	N_2 & ac, dc	A	Outside	N_2 & spring	G, D, P, X	Open	Notes 1, 19, 22
Main steam line drain	X-8	MO globe	4423	ac	A	Inside	ac	G, C, D, P, X	Open	Notes 19, 22
Main steam line drain	X-8	MO globe	4424	dc	A	Outside	dc	G, C, D, P, X	Open	Notes 19, 22
Feedwater (A, B)	X-9	Check	V-14-1, V-14-3	Fwd. flow	A	Inside	Process	Rev. flow	Open	
Feedwater (A, B)	X-9	MO stop check	4441, 42	ac	A	Outside	Process	Rev. flow	Open	Insure positive closure. Note 3
Reactor water sample	X-41	AO gate	4639	Air & ac	A	Inside	Spring	G, C, D, P, X	Open	Manual bypass Notes 19, 22
Reactor water sample	X-41	AO gate	4640	Air & ac	A	Outside	Spring	G, C, D, P, X	Open	Manual bypass Notes 19, 22
Mini purge	X-32	AO gate	1804A, B	Air & ac	B	Outside	Spring	A, G, F, Z	Open	Notes 20, 22
Mini purge	X-32	Check	V-17-83 V-17-96	Fwd. flow	B	Inside	Process	Rev. flow	Open	

[a] Numbers in parentheses are keyed to the notes at the end of this table, along with the signal codes.

[b] See key at the end of the notes to this table.

Table 7.3-1

Sheet 2 of 20

PROCESS PIPELINES PENETRATING PRIMARY CONTAINMENT[a]

Line Isolated	Drywell Penetration	Valve Type[b]	Valve Number	Power to Open (5) (6)	Grp. (16)	Location Ref. to Drywell[b]	Power to Close (5) (6)	Isolation Signal (17)	Normal Status (10)	Remarks and Exceptions
CRD hydraulic ret	X-36	Check	V-17-52	Fwd. flow	A	Outside	Process	Rev. flow	Closed	
CRD hydraulic ret	X-36	Check	V-17-53	Fwd. flow	A	Inside	Process	Rev. flow	Closed	
CRD withdraw	X-38	SO globe	1852 (HCU 1)	ac	A	Outside	Spring			Note 4
CRD withdraw	X-38	SO globe	1854	ac	A	Outside	Spring			Note 4
CRD insert	X-37	SO globe	1851 (HCU 1)	ac	A	Outside	Spring			Note 4
CRD insert	X-37	SO globe	1853 (HCU 1)	ac	A	Outside	Spring			Note 4
Scram inlet	X-37	AO gate	1849 (HCU 1)	Spring	A	Outside	Air & ac			Note 4
Scram discharge	X-38	AO gate	1850 (HCU 1)	Spring	A	Outside	Air & ac			Note 4
RHR reactor shutdown cooling supply	X-12	MO gate	1909	dc	A	Outside	dc	A, F, U	Closed	Note 28
RHR reactor shutdown cooling supply	X-12	MO gate	1908	ac	A	Inside	ac	A, F, U	Closed	

[a] Numbers in parentheses are keyed to the notes at the end of this table, along with the signal codes.
[b] See key at the end of the notes to this table.

Table 7.3-1

Sheet 3 of 20

PROCESS PIPELINES PENETRATING PRIMARY CONTAINMENT[a]

Line Isolated	Drywell Penetration	Valve Type[b]	Valve Number	Power to Open (5) (6)	Grp. (16)	Location Ref. to Drywell[b]	Power to Close (5) (6)	Isolation Signal (17)	Normal Status (10)	Remarks and Exceptions
MO 1908	N/A	Check	V19-0195	Fwd. flow	A	Inside	Process	Rev. flow	Closed	Ref. SE96-18
RHR supp. pool suct.	N225A, B	MO gate	1989/ 2069	ac	B	Outside (i)	ac	--	Open	
RHR pump suction	None	MO gate	1921, 13 2012, 15	ac	B	Outside (o)	ac	--	Open	Note 15
RHR disch. to supp. pool	N210, 211 (A, B)	MO gate	1932/ 2005	ac	B	Outside (o)	ac	G, S	Closed	Note 2
RHR to supp. spray	N-211 (A, B)	MO globe	1933/ 2006	ac	B	Outside (i)	ac	G, S	Closed	Throttling -type valve, Note 2
RHR test line to supp. pool	N-210 (A, B)	MO globe	1934/ 2007	ac	B	Outside (i)	ac	G, S	Closed	Throttling -type valve, Note 2
RHR containment spray	X-39 (A, B)	MO gate	1902/ 2000	ac	B	Outside (i)	ac	G, S	Closed	Note 2
RHR containment spray	X-39 (A, B)	MO globe	1903/ 2001	ac	B	Outside (o)	ac	G, S	Closed	Note 2

[a] Numbers in parentheses are keyed to the notes at the end of this table, along with the signal codes.
[b] See key at the end of the notes to this table.

Table 7.3-1

Sheet 4 of 20

PROCESS PIPELINES PENETRATING PRIMARY CONTAINMENT[a]

Line Isolated	Drywell Penetration	Valve Type[b]	Valve Number	Power to Open (5) (6)	Grp. (16)	Location Ref. to Drywell[b]	Power to Close (5) (6)	Isolation Signal (17)	Normal Status (10)	Remarks and Exceptions
RHR LPCI to reactor	X-13 (A, B)	MO gate	1905/ 2003	ac	A	Outside (i)	ac	A, F, H	Closed	Note 10 Note 13 Note 28
RHR LPCI to reactor	X-13 (A, B)	MO globe	1904/ 2004	ac	A	Outside (o)	ac	H	Open	Throttling -type, Note 8
RHR LPCI to reactor	X-13 (A, B)	Check	V-19-149 V-20-82	Fwd. flow	A	Inside	Process	Rev. flow	Closed	
RHR min. pump flow	N-210 (A, B)	Check	V-19-16 V-19-14 V-20-06 V-20-08	Fwd. flow	B	Outside (o)	Process	Rev. flow	Closed	
RHR min. pump flow	N-210 (A, B)	MO gate	1935/ 2009	ac	B	Outside (i)	ac		Closed	
RHR discharge to radwaste	None	MO globe	1936	ac		Outside (o)	ac	F, A	Closed	Note 20
RHR discharge to radwaste	None	MO gate	1937	dc		Outside (i)	dc	F, A, U	Closed	Note 20
RHR sample	None	SO Gate	1972/ 2051	ac		Outside (o)	Spring	F, A	Closed	
RHR sample	None	SO Gate	1973/ 2052	ac		Outside (o)	Spring	F, A	Closed	

[a] Numbers in parentheses are keyed to the notes at the end of this table, along with the signal codes.
[b] See key at the end of the notes to this table.

Table 7.3-1

Sheet 5 of 20

PROCESS PIPELINES PENETRATING PRIMARY CONTAINMENT[a]

Line Isolated	Drywell Penetration	Valve Type[b]	Valve Number	Power to Open (5) (6)	Grp. (16)	Location Ref. to Drywell[b]	Power to Close (5) (6)	Isolation Signal (17)	Normal Status (10)	Remarks and Exceptions
Standby liquid control	X-42	Check	V-26-8	Fwd. flow	A	Outside	Process	Rev. flow	Closed	
Standby liquid control	X-42	Check	V-26-9	Fwd. flow	A	Inside	Process	Rev. flow	Closed	
RW cleanup from reac.	X-15	MO gate	2700	ac	A	Inside	ac	B, W, J	Open	Pumps are signaled to stop as a result of valve closure Note 23
RW cleanup from reac.	X-15	MO gate	2701	dc	A	Outside	dc	B, W, Y, J, N	Open	Pumps are signaled to stop as a result of valve closure Note 23
RW cleanup return	X-9B	MO globe	2740	ac	A	Outside	ac	B, W, Y, J, N	Open	Note 23
RW cleanup return	X-9B	Check	V-27-11	Fwd. flow	A	Outside	Process	Rev. flow	Open	
RCIC to feedwater	X-9B	MO gate	2512	dc		Outside (o)	dc	V	Closed	Opens on Signal B
RCIC to feedwater	X-9B	Check	V-25-36	Fwd. flow		Outside (i)	Process	Rev. flow	Closed	

[a] Numbers in parentheses are keyed to the notes at the end of this table, along with the signal codes.
[b] See key at the end of the notes to this table.

Table 7.3-1

Sheet 6 of 20

PROCESS PIPELINES PENETRATING PRIMARY CONTAINMENT[a]

Line Isolated	Drywell Penetration	Valve Type[b]	Valve Number	Power to Open (5) (6)	Grp. (16)	Location Ref. to Drywell[b]	Power to Close (5) (6)	Isolation Signal (17)	Normal Status (10)	Remarks and Exceptions
RCIC turbine steam supply	X-10	MO gate	2400	ac	A	Inside	ac	K, R, AA	Open	Opens on Signal B; line break Signal K overrides to close valves. Note 24
RCIC turbine steam supply	X-10	MO gate	2401	dc	A	Outside	dc	K, R, AA	Open	Opens on Signal B; line break Signal K overrides to close valves. Note 24
RCIC turbine exhaust	N-212	Check	V-24-23	Fwd. flow	B	Outside (o)	Process	Rev. flow	Closed	
RCIC turbine exhaust	N-212	Stop check	V-24-8	Fwd. flow	B	Outside (i)	Process	Rev. flow	Locked open	Open
GS cond. drain	None	AO gate	2435	Air & dc		Outside (i)	Spring	E	Closed	
GS cond. drain	None	AO gate	2436	Air & dc		Outside (o)	Spring	E	Open	
RCIC steam line drain	None	AO gate	2410	Air & dc		Outside (i)	Spring	B, E	Open	
RCIC steam line drain	None	AO gate	2411	Air & dc		Outside (o)	Spring	B, E	Open	

[a] Numbers in parentheses are keyed to the notes at the end of this table, along with the signal codes.
[b] See key at the end of the notes to this table.

Table 7.3-1

Sheet 7 of 20

PROCESS PIPELINES PENETRATING PRIMARY CONTAINMENT[a]

Line Isolated	Drywell Penetration	Valve Type[b]	Valve Number	Power to Open (5) (6)	Grp. (16)	Location Ref. to Drywell[b]	Power to Close (5) (6)	Isolation Signal (17)	Normal Status (10)	Remarks and Exceptions
RCIC pump suction (supp. pool)	N-224	MO gate	2517	dc	B	Outside (o)	dc		Closed	
RCIC pump suction (supp. pool)	N-224	MO gate	2516	dc	B	Outside (i)	dc		Closed	
RCIC min. pump flow	N-210	Check	V-25-06	Fwd. flow	B	Outside (o)	Process	Rev. flow	Closed	
RCIC min. pump flow	N-210	MO globe	2510	dc	B	Outside (i)	dc	V	Closed	Opens/ closes to maintain min. flow
Core spray to reactor	X-16 (A, B)	MO gate	2115/ 2135	ac	A	Outside (o)	ac	--	Open	Note 9
Core spray to reactor	X-16 (A, B)	MO gate	2117/ 2137	ac	A	Outside (i)	ac	--	Closed	Note 9
Core spray to reactor	X-16 (A, B)	Check	V-21-72 V-21-73	Fwd. flow	A	Inside	Process	Rev. flow	Closed	
Core spray test to supp. pool	N-210 (A, B)	MO globe	2112/ 2132	ac	B	Outside	ac	G	Closed	Closes on signal "G"
Core spray pump suction	N-227 (A, B)	MO gate	2146/ 2147	ac	B	Outside (i)	ac	--	Open	
Core spray pump suction	N-227 (A, B)	MO gate	2100/ 2120	ac	B	Outside (i)	ac	--	Open	

[a] Numbers in parentheses are keyed to the notes at the end of this table, along with the signal codes.
[b] See key at the end of the notes to this table.

Table 7.3-1

Sheet 8 of 20

PROCESS PIPELINES PENETRATING PRIMARY CONTAINMENT[a]

Line Isolated	Drywell Penetration	Valve Type[b]	Valve Number	Power to Open (5) (6)	Grp. (16)	Location Ref. to Drywell[b]	Power to Close (5) (6)	Isolation Signal (17)	Normal Status (10)	Remarks and Exceptions
Core spray min. pump flow	N-210 (A, B)	Check	V-21-9 V-21-12	Fwd. flow	B	Outside (o)	Process	Rev. flow	Closed	
Core spray min. pump flow	N-210 (A, B)	MO gate	2104/2124	ac	B	Outside (i)	ac		Open	Opens/ closes to maintain min. pump flow
Drywell equipment drain disch.	X-48	AO gate	3728	Air & ac	B	Outside (i)	Spring	A, F	Open	
Drywell equipment drain disch.	X-48	AO gate	3729	Air & ac	B	Outside (o)	Spring	A, F	Open	
Drywell floor drain disch.	X-19	AO gate	3704	Air & ac	B	Outside (i)	Spring	A, F	Open	
Drywell floor drain disch.	X-19	AO gate	3705	Air & ac	B	Outside (o)	Spring	A, F	Open	
HPCI to feedwater	X-9A	MO gate	2312	dc		Outside (o)	dc	V	Closed	Opens on B or F signal
HPCI to feedwater	X-9A	Check	V-23-49	Fwd. flow		Outside (i)	Process	Rev. flow	Closed	

[a] Numbers in parentheses are keyed to the notes at the end of this table, along with the signal codes.
[b] See key at the end of the notes to this table.

Table 7.3-1

Sheet 9 of 20

PROCESS PIPELINES PENETRATING PRIMARY CONTAINMENT[a]

Line Isolated	Drywell Penetration	Valve Type[b]	Valve Number	Power to Open (5) (6)	Grp. (16)	Location Ref. to Drywell[b]	Power to Close (5) (6)	Isolation Signal (17)	Normal Status (10)	Remarks and Exceptions
HPCI turbine steam	X-11	MO gate	2238	ac	A	Inside	ac	L, Q, AB	Open	Signal "B" or "F" opens valve Note 24
HPCI turbine steam	X-11	MO gate	2239	dc	A	Outside	dc	L, Q, AB	Open	Note 24
HPCI steam line drain	None	AO gate	2211	Air & dc		Outside (i)	Spring	B, E	Open	
HPCI steam line drain	None	AO gate	2212	Air & dc		Outside (o)	Spring	B, E	Open	
HPCI turbine exhaust	N-214	Check	V-22-16	High exh. pressure	B	Outside (o)	Process	Rev. flow	Closed	
HPCI turbine exhaust	N-214	Stop check	V-22-17	High exh. pressure	B	Outside (i)	Process	Rev. flow	Open	Note 14
HPCI pump suction (supp. pool)	N-226	MO gate	2321	dc	B	Outside (i)	dc	L, Q	Closed	Notes 14, 24
HPCI pump suction (supp. pool)	N-226	MO gate	2322	dc	B	Outside (o)	dc	L, Q	Closed	Notes 14, 24

[a] Numbers in parentheses are keyed to the notes at the end of this table, along with the signal codes.
[b] See key at the end of the notes to this table.

Table 7.3-1

Sheet 10 of 20

PROCESS PIPELINES PENETRATING PRIMARY CONTAINMENT[a]

Line Isolated	Drywell Penetration	Valve Type[b]	Valve Number	Power to Open (5) (6)	Grp. (16)	Location Ref. to Drywell[b]	Power to Close (5) (6)	Isolation Signal (17)	Normal Status (10)	Remarks and Exceptions
GS cond. drain	None	AO gate	2234	Air & dc		Outside (i)	Spring	E	Open	
HPCI/RCIC exhaust vacuum	N-219	MO gate	2290 A, B	ac	B	Outside	ac	F + AB	Open	
GS cond. drain	None	AO gate	2235	Air & ac		Outside (o)	Spring	E	Closed	
HPCI min. pump flow	N-210	Check	V-23-14	Fwd. flow	B	Outside (o)	Process	Rev. flow	Closed	
HPCI min. pump flow	N-210	MO globe	2318	dc	B	Outside (i)	dc	V	Closed	Opens/closes to maintain min. pump flow
TIP	X-35 (B-D)	SO shear	1S260A-shear 1S260B-shear 1S260C-shear		B	Outside (o)	dc	--	Open	One valve on each of three lines
TIP	X-35 (B-D)	SO ball	1S260A-ball 1S260B-ball 1S260C-ball	ac	B	Outside (i)	Spring	F, A	Closed	One valve on each of three lines Note 12

[a] Numbers in parentheses are keyed to the notes at the end of this table, along with the signal codes.

[b] See key at the end of the notes to this table.

Table 7.3-1

Sheet 11 of 20

PROCESS PIPELINES PENETRATING PRIMARY CONTAINMENT[a]

Line Isolated	Drywell Penetration	Valve Type[b]	Valve Number	Power to Open (5) (6)	Grp. (16)	Location Ref. to Drywell[b]	Power to Close (5) (6)	Isolation Signal (17)	Normal Status (10)	Remarks and Exceptions
TIP purge	X-35A	Check	V-43-503	Fwd. flow	B	Outside (i)	Process	Rev. flow	Closed	Note 12
Inst. Line-typical	--	Root globe	--	Hand	--	Outside	Hand	---	Open	See Chapter 5 for Instrument Line Isolation Discussion
	--- ---	EFCV Inst. globe	--- ---	Spring hand	--- ---	Outside Outside	Flow Hand	--- ---	Open	
Service air to drywell	X-21	Hand gate	V-30-287	hand	B	Outside (i)	Hand	---	Closed	
Service air to drywell	X-21	Check	V-30-286	Fwd. flow	B	Outside (o)	Process	Rev. flow	Closed	Line blind Flanged in-side drywell
Inst. N_2 to drywell	X-22	AO gate	4371A	Air & ac	B	Outside	Spring	A, F, Z	Open	Notes 20, 22
Inst. N_2 to drywell	X-22	Check	V-43-214	Fwd. flow	B	Inside	Process	Rev. flow	Open	
Inst. N_2 to torus	N-229A	AO gate	4371C	Air & ac	B	Outside	Spring	A, F, Z	Open	Notes 20, 22

[a] Numbers in parentheses are keyed to the notes at the end of this table, along with the signal codes.
[b] See key at the end of the notes to this table.

Table 7.3-1

Sheet 12 of 20

PROCESS PIPELINES PENETRATING PRIMARY CONTAINMENT[a]

Line Isolated	Drywell Penetration	Valve Type[b]	Valve Number	Power to Open (5) (6)	Grp. (16)	Location Ref. to Drywell[b]	Power to Close (5) (6)	Isolation Signal (17)	Normal Status (10)	Remarks and Exceptions
Containment N_2 comp. suct.	X-32	AO gate	4378A, B	Air & ac	B	Outside	Spring	A, F, Z	Open	Notes 20, 22
Reac. bldg. cool wtr. in	X-55	MO gate	4841B	ac	C	Outside	ac	G	Open	
Reac. bldg.cool wtr. out	X-54	MO gate	4841A	ac	C	Outside	ac	G	Open	
Demin. service wtr. in.	X-20	Hand gate	V-09-65	Hand	C	Outside	Hand	--	Closed	
Demin. service wtr. in.	X-20	Hand gate	V-09-111	Hand	C	Inside	Hand	--	Closed	
Well water in	X-23 A, B	AO gate AO globe	5718A 5718 B	Spring	C	Outside (o)	Air & ac	G	Open	Contains two supply and two return lines Note 19
Well water in	X-23 A, B	Check	V-57-58 V-57-59	Fwd. flow	C	Outside (i)	Process	Rev. flow	Open	
Well water out	X-24 A, B	AO gate AO globe	5704A 5704B	Spring	C	Outside	Air & ac	G	Open	Note 19

[a] Numbers in parentheses are keyed to the notes at the end of this table, along with the signal codes.
[b] See key at the end of the notes to this table.

Table 7.3-1

Sheet 13 of 20

PROCESS PIPELINES PENETRATING PRIMARY CONTAINMENT[a]

Line Isolated	Drywell Penetration	Valve Type[b]	Valve Number	Power to Open (5) (6)	Grp. (16)	Location Ref. to Drywell[b]	Power to Close (5) (6)	Isolation Signal (17)	Normal Status (10)	Remarks and Exceptions
Well water back flush inlet	X-24 A, B	Hand gate	V-57-75 V-57-76	Hand	C	Outside	Hand	G	Closed	Key locked
Well water back flush inlet	X-24 A, B	Check	V-57-60 V-57-61	Fwd. flow	C	Outside	Process	Rev. flow	Closed	
Well water back flush outlet	X-23 A, B	Hand gate	V-57-77 V-57-78	Hand	C	Outside	Hand	G	Closed	Key locked
Vac brkr torus-drywell	N-202 A-G	Vac. brkr.	4327	Torus press.	B	In torus	Drywell press.	---	Closed	Has air-operated check open feature-4327 A-G excluding E. Notes 20, 22
Vac brkr actuating N_2	N-229 A	AO gate	4371A, C	Air & ac	B	Outside	Spring	RM	Open	Notes 20, 22
Vac brkr reac bldg-torus	N-231	AO btrfly	4304, 4305	Spring	B	Outside (i)	Air & ac	F, A, Z (7)	Closed	RB- torus differential pressure overrides isolation signal to open valves Notes 20,22, 27

[a] Numbers in parentheses are keyed to the notes at the end of this table, along with the signal codes.
[b] See key at the end of the notes to this table.

Table 7.3-1

Sheet 14 of 20

PROCESS PIPELINES PENETRATING PRIMARY CONTAINMENT[a]

Line Isolated	Drywell Penetration	Valve Type[b]	Valve Number	Power to Open (5) (6)	Grp. (16)	Location Ref. to Drywell[b]	Power to Close (5) (6)	Isolation Signal (17)	Normal Status (10)	Remarks and Exceptions
Vac brkr reac bldg-torus	N-231	Check	V-43-168 V-43-169	R.B. Press	B	Outside (o)	Torus press.	---	Closed	
Purge Inlet	X-26, N-220	AO btrfly	4306	Air & ac	B	Outside (o)	Spring	F, A, Z (7)	Closed	(18) Notes 20, 22, 27
Drywell purge inlet	X-26	AO btrfly	4307	Air & ac	B	Outside (i)	Spring	F, A, Z (7)	Closed	(18) Notes 20, 22, 27
Torus purge inlet	N-220	AO btrfly	4308	Air & ac	B	Outside (i)	Spring	F, A, Z (7)	Closed	(18) Notes 20, 22, 27
Drywell vent	X-25	AO btrfly	4302	Air & ac	B	Outside (i)	Spring	F, A, Z (7)	Closed	(18) Notes 20, 22, 27
Drywell vent valve bypass	X-25	AO gate	4310	Air & ac	B	Outside (i)	Spring	F, A, Z (7)	Closed	(18) Notes 20, 22
Drywell vent	X-25	AO btrfly	4303	Air & ac	B	Outside (o)	Spring	F, A, Z (7)	Closed	(18) Notes 20, 22, 27
Torus vent	N-205	AO btrfly	4300	Air & ac, dc (26)	B	Outside (i)	Spring	F, A, Z (7)	Closed	(18) Notes 20, 22, 27
Torus vent valve bypass	N-205	AO btrfly	4309	Air & ac	B	Outside (i)	Spring	F, A, Z (7)	Closed	(18) Notes 20, 22
Torus vent	N-205	AO btrfly	4301	Air & ac	B	Outside (o)	Spring	F, A, Z (7)	Closed	(18) Notes 20, 22, 27

2016-003

[a] Numbers in parentheses are keyed to the notes at the end of this table, along with the signal codes.
[b] See key at the end of the notes to this table.

Table 7.3-1

Sheet 15 of 20

PROCESS PIPELINES PENETRATING PRIMARY CONTAINMENT[a]

Line Isolated	Drywell Penetration	Valve Type[b]	Valve Number	Power to Open (5) (6)	Grp. (16)	Location Ref. to Drywell[b]	Power to Close (5) (6)	Isolation Signal (17)	Normal Status (10)	Remarks and Exceptions
Torus Hardened Vent (Inboard)	N-230A	AO btrfly	4360	Air & dc	B	Outside (o)	Spring	---	Closed	Note 25
Torus Hardened Vent (Outboard)	N-230A	AO btrfly	4361	Air & dc	B	Outside (o)	Spring	---	Closed	Note 25
Drywell atm analyzer suction	X-50, X56	SO gate	8101 A, B 8102 A, B 8103 A, B 8104 A, B	dc	B	Outside (i) Outside (o) Outside (i) Outside (o)	Spring	F, A, Z (7)	Open	Manual override of all auto signals Notes 20, 22
Makeup N_2	X-26 N-220	AO gate	4311	Air & ac	B	Outside (o)	Spring	F, A, Z (7)	Open	Manual override of all auto signals Notes 20, 22
Makeup N_2-drywell	X-26	AO gate	4312	Air & ac	B	Outside (i)	Spring	F, A, Z (7)	Closed	Manual override of all auto signals Notes 20, 22
Makeup N_2-drywell	N-220	AO gate	4313	Air & ac	B	Outside (i)	Spring	F, A, Z (7)	Closed	Manual override of all auto signals Notes 20, 22
Drywell atm analyzer return	X-50, X-46	SO gate	8105 A, B 8106 A, B	dc	B	Outside (i) Outside (o)	Spring	F, A, Z (7)	Open	Notes 20, 22

2016-003

[a] Numbers in parentheses are keyed to the notes at the end of this table, along with the signal codes.

[b] See key at the end of the notes to this table.

Table 7.3-1

Sheet 16 of 20

PROCESS PIPELINES PENETRATING PRIMARY CONTAINMENT[a]

Line Isolated	Drywell Penetration	Valve Type[b]	Valve Number	Power to Open (5) (6)	Grp. (16)	Location Ref. to Drywell[b]	Power to Close (5) (6)	Isolation Signal (17)	Normal Status (10)	Remarks and Exceptions
Torus atm analyzer suction	N-229 B, G	SO gate	8107 A, B 8108 A, B	dc	B	Outside (i) Outside (o)	Spring	F, A, Z (7)	Open	Notes 20, 22
Torus atm analyzer suction	N-229 C, F	SO gate	8109 A, B 8110 A, B	dc	B	Outside (i) Outside (o)	Spring	F, A, Z (7)	Open	Notes 20, 22
Post accident liquid sample return	N-229H	SO globe	8772A 8772B	dc	B	Outside (i) Outside (o)	Spring	F, A, Z (7)	Closed	Key lock Notes 20, 22
CAD system isolation	N-211 A N-211 B	Manual SO gate Manual SO gate	V-43-111 4333 A V-43-112 4334 A	-- dc -- dc	-- -- -- --	Outside (i) Outside (o) Outside (i) Outside (o)	-- Spring -- Spring	-- -- -- --	Locked Closed Closed Locked Closed Closed	-- Key lock -- Key lock
CAD system Isolation	X-39A X-39 B	Manual SO gate Manual SO gate	V-43-110 4332 A V-43-109 4331 A	-- dc -- Dc	-- -- -- --	Outside (i) Outside (o) Outside (i(Outside (o)	-- Spring -- Spring	-- -- -- --	Locked Closed Closed Locked Closed Closed	-- Key lock -- Key lock
Postaccident reactor liquid sample	X-40D X-40C	SO globe	4594 A, B 4595 A, B	dc	A	Outside (i) Outside (o)	Spring	F, A, Z (7)	Closed	Key lock Notes 20, 22
HPCI Exhaust Drain Pot	N-222	Stop Check	V-22-22	Fwd. flow	B	Outside (i)	Process	Rev. flow	Locked Open	Open
HPCI Exhaust Drain Pot	N-222	Check	V-22-21	Fwd. flow	B	Outside (o)	Process	Rev. flow	Closed	
RCIC exh vac bkr	N-212	Check	V-24-46 V-24-47	Fwd. flow	B	Outside (i) Outside (o)	Process	Rev. flow	Closed	
HPCI exh vac bkr	N-214	Check	V-22-63 V-22-64	Fwd. flow	B	Outside (i) Outside (o)	Process	Rev. flow	Closed	

[a] Numbers in parentheses are keyed to the notes at the end of this table, along with the signal codes.

[b] See key at the end of the notes to this table.

Table 7.3-1

ISOLATION SIGNAL CODES FOR TABLE 7.3-1

Signal	Description
A*, **	Reactor vessel low water level - All isolation valves, except reactor main steam line isolation valves, main steam line drains, valves, reactor sample valves, reactor building cooling water inlet and outlet valves, well water inlet and outlet valves, RWCU inboard and outboard valves and well water back flush inlet and outlet valves close. (A reactor scram also occurs at this level.)
B*	Reactor vessel low-low water level - this is the second of the three isolation low-water-level signals. The isolation valves for RWCU, the HPCI and RCIC steam line drains to the condenser receive a close signal at this level.
C*	High radiation - main steam line.
D*	Line break - main steam line (steam line high steam flow or high space temperature in steam tunnel).
E*	When RCIC/HPCI turbine steam supply valve is open, indicated valves are closed and interlocked to prevent reopening.
F*, **	High drywell pressure closes drywell atmospheric control and secondary containment isolation valves (RHR and core spray systems are started).
G*	Reactor vessel low-low-low water level isolates the reactor building cooling water inlet and outlet valves, well water inlet and outlet valves (RHR and core spray systems are started). This is the lowest of the three isolation low-water-level signals. The reactor main steam lines, the main steam line drain, reactor water sample line and mini-purge are closed at this level.
H	Line break in recirculation loop - close corresponding RHR-LPCI loop valves and open valves in opposite loop.
J*	Line break in RWCU system - high differential flow. A time delay is provided to allow for momentary surges when placing the system in service.
K*	Line break in RCIC system steam line to turbine as discussed in Section 7.3.1.1.1.8 (items 7, 8, and 9).
L*	Line break in HPCI system steam line to turbine as discussed in Section 7.3.1.1.1.8 (item 11, 12, and 13).
N	High temperature at outlet of RWCU system nonregenerative heat exchanger.
P*	Low main steam line pressure at inlet to turbine for RUN mode only.

* These are the isolation functions of the primary containment isolation and nuclear steam supply shutoff system; other functions are given for information only.

** These signals cause well water valves to return to the normal cooling mode when in the backflush mode (does not isolate well water). Isolation of the well water lines is not required on these signals because these lines are not open to either the reactor vessel or the primary containment.

ISOLATION SIGNAL CODES FOR TABLE 7.3-1

Signal	Description
Q	HPCI high turbine exhaust diaphragm pressure.
R	RCIC high turbine exhaust diaphragm pressure.
S	Drywell pressure or low level inside reactor vessel shroud below low-level trip point.
T	Low reactor pressure permissive to open core spray and RHR-LPCI valves.
U	Reactor vessel pressure exceeding pressure of shutdown cooling range.
V	Steam supply valve or turbine stop valve closed.
W*	High differential temperature between inlet and outlet of RWCU system equipment room ventilation or high ambient temperature in RWCU system equipment room.
X*	MSIV closure when condenser vacuum decays to 10 in. Hg vacuum or high turbine building temperature.
Y	Standby liquid control system actuated.
Z*,**	High radiation, reactor building and/or fuel pool ventilation exhaust or high-high radiation offgas vent pipe.
AA	RCIC steam line low pressure.
AB	HPCI steam line low pressure.
RM*	Remote manual switch from control room.

Key

SO - solenoid operated
AO - air operated
MO - motor operated
(i) - inner (toward nuclear process piping) isolation valve
(o) - outer (away from nuclear process piping) isolation valve
EFCV - excess flow check valve
GS - gland seal

* These are the isolation functions of the primary containment isolation and nuclear steam supply shutoff system; other functions are given for information only.

** These signals cause well water valves to return to the normal cooling mode when in the backflush mode (does not isolate well water). Isolation of the well water lines is not required on these signals because these lines are not open to either the reactor vessel or the primary containment.

NOTES

These notes are keyed by number to correspond to numbers in parentheses, in Table 7.3-1:

1. Main steam isolation valves require that both solenoid pilots be deenergized to close valves. Accumulator nitrogen pressure plus spring act together to close valves when both pilots are deenergized. Voltage failure at only one pilot does not cause valve closure. The valves are designed to fully close in less than 10 sec, but in no less than 3 sec.

2. Drywell spray and suppression pool cooling valves have interlocks that allow them to by manually reopened after automatic closure to permit containment spray, for high drywell pressure conditions, and/or suppression water cooling. When signal (G) is present, valves may be opened if "Drywell pressure not low" and "Level inside RV shroud above low level trip" signals are present. If either signal of "S" is lost, the valves will close. When automatic signal (G) is not present, these valves may be opened for test or operating convenience.

3. The feedwater outboard stop check valve can be held shut.

4. Control rod hydraulic lines can be isolated by the solenoid valves outside the primary containment. Lines that extend outside the primary containment are small and terminate in a system that is designed to prevent out-leakage. Valves normally are closed, but they open on rod movement or during reactor scram.

5. Alternating current motor-operated valves are powered from the essential ac buses. Direct current operated isolation valves are powered from the plant batteries.

6. All motor-operated isolation valves remain in the last position upon failure of valve power. Air-operated valves fail into the position required to optimize plant safety on loss of motive air or loss of electric power to the solenoid pilot valve.

7. The following will provide the "Z" isolation signal: offgas stack high-high radiation on one of two channels, refuel pool ventilation exhaust high radiation on one of two channels or either channel out of operate mode, and reactor building ventilation exhaust high radiation or downscale on one of two channels.

8. Coincident low reactor water level or high drywell pressure signal "G" and low reactor pressure signal "T" open LPCI valves, except that recirculation line break signal "H" overrides to close LPCI valves on broken side and automatically opens the LPCI valves in the opposite loop. Timer interlocks prevent opening of closed loop inboard valve for 10 min. and closing of opened loop outboard valve for 5 min. Special interlocks permit testing these valves with manual switch during any mode of reactor operation except when coincident signals "G" and "T" are present.

9. Coincident signals "G" and "T" open valves. Special interlocks that allow manual opening of one valve at a time permit testing these valves by manual switch except when automatic signals are present.

10. Normal status position of valve (open or closed) is the position during normal power operation of the reactor (see "Normal Status" column).

NOTES

11. Both the drywell and torus vent bypass valves are operated by a single switch when the three-position key-lock permissive switch is in the "normal" position. The bypass valves may be operated individually by repositioning the permissive switch.

12. Signal "A" or "F" causes automatic withdrawal of TIP probe. When the probe is withdrawn, the ball valve automatically closes when the detector is housed in the chamber shield. TIP purge is secured by isolation signal. (Approval basis for this class of line isolation provisions is discussed in NEDC 22253).

13. Inboard injection valves close when RHR shutdown cooling supply valves (MO 1909 and 1908) are open and signal "A" or "F" are present and signal "U" is not present.

14. For HPCI the condensate storage suction valves open on initiation signal. When a low condensate storage tank level or high suppression pool level occurs, the suppression pool suction valves open. When the suppression pool suction valves are fully open, the condensate storage tank valves close.

15. A line break in RHR system piping (high temperature or high differential temperature in RHR equipment space) will alarm only; no auto closure is initiated.

16. Valve groups are those used in Chapter 7 and Section 6.2.

17. All regular group A, B, and C isolation valves are capable of remote manual operation from the control room.

18. Key-lock switch provided for override of each actuation signal.

19. Key-lock switches provided for override of low-low-low reactor water level signals.

20. Key-lock switches provided for override of low reactor water level and high drywell pressure signals.

21. Key-lock switches provided for override of all actuation signals <u>except</u> Low-Low-Low reactor water level signal.

22. Key-lock switches provided for override of ALL actuation signals.

23. Key-lock switches provided for override of ALL actuation signals except Hi flow and non-regenerative Hx high inlet temperature.

24. Key-lock switches provided for override of low steam pressure, high area temperatures and Hi RPV water level.

2016-003

25. CV-4360 and CV-4361 are "seal closed" primary containment isolation valves that are not subject to automatic primary containment isolation signals. These valves are administratively controlled closed by isolation of the pneumatic pressure to the valve operators and by use of a key-lock hand switch. To open CV-4360/CV-4361, locked closed pneumatic isolation valve V43-0642 is required to be opened and key-lock hand switch HS-4360 is required to be taken to OPEN. The DAEC Emergency Operating Procedures and Severe Accident Management Procedures will control the use of CV-4360 and CV-4361 in response to containment threatening events.

26. Not used.

27. Valves have T-ring seals.

28 This valve is the outboard isolation valve located on the process pipeline for this penetration. However, effectively, MO1905, MO1909 and MO2003 are the combined outboard isolation valves for this penetration due to a small line which connects these process pipelines, between each of their inboard and outboard isolation valves, together.

Table 7.3-2

PRIMARY CONTAINMENT ISOLATION AND NUCLEAR STEAM SUPPLY SHUTOFF SYSTEM ISOLATION SETPOINTS

Isolation Function	Sensor/Tripping Device	Nominal Setting
Reactor vessel low-low water level (Signal A) (common to RPS and ECCS)	Differential-pressure switch	+170 in. Indicated level[a]
Reactor vessel low-low water level (Signal B)	Differential-pressure switch	+119.5 in. Indicated level[a]
Reactor vessel low-low-low water level (Signal G) (common to ECCS)	Differential-pressure switch	+64 in. Indicated level[a,b]
Main steam line high radiation	Radiation monitor	3 x background[c]
Main steam line high flow	Differential-pressure switch	136.4% of rated
Main steam line low pressure	Pressure switch	≥850 psig
Primary containment high pressure (common to RPS and ECCS)	Pressure switch	1 <P <2 psig
RCIC equipment room high ambient temperature	Temperature recorder channel	≤175°F
2016-007 RCIC equipment room high differential temperature	Differential-temperature recorder channel	≤50°FΔT
RCIC turbine steam line high flow	Differential-pressure switch	≤155 in. H_2O (300% of nominal rated flow)
RCIC turbine steam line low pressure	Pressure switch	100 >P >50 psig
HPCI equipment room high ambient temperature	Temperature recorder channel	≤175°F
2016-007 HPCI equipment room high differential temperature	Differential-temperature recorder channel	≤50°F ΔT
HPCI turbine steam line high flow	Differential-pressure switch	≤103 in. H_2O (outboard inst.) ≤386 in. H_2O (inboard inst.) (300% of nominal rated flow)
HPCI turbine steam instrument line failure	Differential-pressure switch	±225 in. H_2O (300% of nominal rated flow)
Condenser Back Pressure-High	Pressure Switch	20 In. Hg

[a] Zero referenced to top of active fuel (344.5 in. above vessel zero).

[b] Corresponds to 18.5 inch actual vessel level under high drywell temperature accident conditions.

[c] Within 24 hours prior to the planned start of the hydrogen injection test with the reactor power at greater than 20% rated power, the normal full-power radiation background level and associated trip setpoints may be changed based on a calculated value of the radiation level expected during the test. The background radiation level and associated trip setpoints may be adjusted during the test program based on either calculations or measurements of actual radiation levels resulting from hydrogen injection. The background radiation level shall be determined and associated trip setpoints shall be set within 24 hours of reestablishing normal radiation levels after completion of the hydrogen injection test or within 12 hours of establishing reactor power levels below 20% rated power, while these functions are required to be operable.

Table 7.3-2

PRIMARY CONTAINMENT ISOLATION AND NUCLEAR STEAM SUPPLY SHUTOFF SYSTEM ISOLATION SETPOINTS

Isolation Function	Sensor/Tripping Device	Nominal Setting
HPCI turbine steam line low pressure	Pressure switch	100 >P >50 psig
Reactor building ventilation exhaust high radiation	Radiation monitor	≤ 11 mR/hr
Offgas stack high-high radiation	Radiation monitor	Variable[b]
RWCU system equipment room high ambient temperature	Temperature recorder channel	≤ 130°F
Main steam line tunnel high temperature	Temperature switch	≤ 200°F
Turbine building high temperature	Temperature switch	≤ 200°F
2013-008 RWCU system high differential flow	Differential-flow switch	37.5 gpmd
Suppression pool area high ambient temperature	Temperature recorder channel	150°F
Suppression pool area vent inlet and outlet high differential temperature	Differential-temperature recorder channel	50° ΔT
RWCU system nonregenerative heat exchanger discharge high temperature	Temperature switch	140°F
RWCU system equipment room vent air inlet/outlet high differential temperature	Differential-temperature recorder channel	Δ14°F above 100% power operation ambient temperature conditions as determined by DAEC plant test procedure.
Reactor vessel high water level	Differential-pressure switch	+211 in. indicated level[a]
Reactor vessel shutdown cooling mode permissive pressure	Pressure switch	135 psig
Refuel pool ventilation exhaust high radiation	Radiation Monitor	≤ 9mR/hr
RWCU Near TIP Room Ambient Temperature-High	Temperature recorder channel	≤ 111.5 °F

[a] Zero referenced to top of active fuel (344.5 in. above vessel zero).

[b] Determined in accordance with DAEC Offsite Dose Assessment Manual (ODAM)

Table 7.3-3

HIGH-PRESSURE COOLANT INJECTION SYSTEM
INSTRUMENT TRIP SETTINGS

HPCI Function	Instrument	Nominal Setting
Reactor vessel high-water-level turbine trip	Level Switch	+211 in. Indicated level [a]
Turbine exhaust high pressure	Pressure switch	140 psig
HPCI system pump low suction pressure	Pressure switch	11.63 in. Hg vac.
Reactor vessel low water level [c]	Level switch	+119.5 in. indicated level [a]
Primary containment (drywell) high pressure[c]	Pressure switch	2 psig
HPCI system steam supply low pressure	Pressure switch	< 100 psig reset > 50 psig trip
Condensate storage tank low level	Level switch	12 in. above tank bottom
Turbine overspeed	Centrifugal device	125% of rated speed
Suppression chamber high water level	Level switch	5 in. above nominal water level
Turbine Exhaust Diaphragm High Pressure	Pressure switch	≤ 10 psig
HPCI Steam Line Flow-High HPCI Steam Line Flow-High	Pressure switch Pressure switch	≤ 103 In. H2O (out board) ≤ 386 In. H2O (In board)
HPCI Equipment Room Temperature-High	Temperature recorder channel	≤ 175°F
HPCI Room Ventilation Differential Temperature-High	Differential Temperature recorder channel	≤ Δ 50° F
HPCI Leak Detection Time Delay	Relay	≤ 15 minutes
Suppression Pool Area Ambient Temperature-High	Temperature recorder channel	≤ 150° F
Suppression Pool Area Ventilation Differential Temperature-High	Differential Temperature recorder channel	≤Δ 50° F

[a] Zero referenced to top of active fuel (344.5 in. above vessel zero).
[c] Incident detection circuitry instrumentation.

Table 7.3-4

AUTOMATIC DEPRESSURIZATION SYSTEM
INSTRUMENT TRIP SETTINGS

System Function	Instrument Type	Nominal Setting
Rector vessel low-low-low water level[a]	Level switch	+18.5 in. Indicated level [b]
Automatic depressurization time delay[a]	Self Indicating Timer	120 sec
LPCI pump discharge pressure[a]	Pressure switch	125 ±25 psig
Core spray pump discharge pressure[a]	Pressure switch	145 ±20 psig
Reactor vessel low water level "confirmed"	Level switch	+170 in indicated level[b]

[a] Incident detector circuitry instrumentation.
[b] Zero referenced to top of active fuel (344.5 in. above vessel zero).

Table 7.3-5
CORE SPRAY SYSTEM INSTRUMENTATION

Core Spray Function	Instrument Type	Nominal Setting
Reactor vessel low (low-low-low) water level[a]	Level switch	+18.5 in. indicated level[b]
Primary containment high pressure[a]	Pressure switch	2 psig
Reactor vessel low pressure	Pressure switch	450 psig[c]
Core spray sparger to reactor pressure vessel high differential pressure	Differential-pressure switch	0.74 psid
Pump discharge flow	Flow indicator	None
Pump suction pressure	Pressure indicator	None
Pump discharge pressure[a]	Pressure switch	145 ±20 psig
Pump Start Time Delay	Relay	5 Sec

[a] Incident detection circuitry instrumentation.
[b] Zero referenced to top of active fuel (344.5 in. above vessel zero).
[c] Approximate setting.

Table 7.3-6

LOW PRESSURE COOLANT INJECTION
INSTRUMENT TRIP SETTINGS

LPCI Function	Instrument Type	Nominal Setting
Reactor vessel water level (LPCI loop selection)[a]	Level switch	+119.5 in. indicated level[b]
Reactor vessel low water level (LPCI pump start signal)[a]	Level switch	+18.5 in. indicated level[b]
Primary containment (drywell) high pressure (LPCI loop selection and pump start)[a]	Pressure switch	2 psig
Reactor vessel low water level (inside shroud)	Level Switch	+305.5 in.[c] above vessel zero (2/3 core height)
Recirculation loop break detection	Differential-pressure switch	±1/0 psid[d] trip on upscale/downscale
LPCI break detection circuit	Timer	1/2 sec[c]
LPCI break detection circuit	Timer	2 sec[c]
LPCI reactor vessel low pressure	Pressure switch	450 psig[c]
LPCI valve initiation signal cancellation	Timer	10 min[c]
LPCI valve initiation signal cancellation	Timer	5 min[c]
LPCI pump low flow	Flow switch	1800 gpm[c]
Reactor vessel pressure permissive (loop selection)	Pressure switch	900 psig[c]
Recirculation pumps differential pressure	Differential-pressure switch	≤2 psid[d] trip on downscale
LPCI pump discharge pressure[a]	Pressure switch	100 psig
Recirculation pump running permissive	Differential-pressure switch	2 psid
Pump start time delay	Relay	10 sec (A&B) 15 sec (C&D)
Recirculation riser differential pressure	Differential-pressure switch	0.5 < p < 1.5 psid

[a] Incident detection circuitry instrumentation.
[b] Zero referenced to top of active fuel (344.5 in. above vessel zero).
[c] Approximate setting.
[d] Repeatability of 0.5% of trip point and will return from overrange of 200 psi to 0 psi in 100 msec maximum. (200 psi is maximum overrange that can occur.)

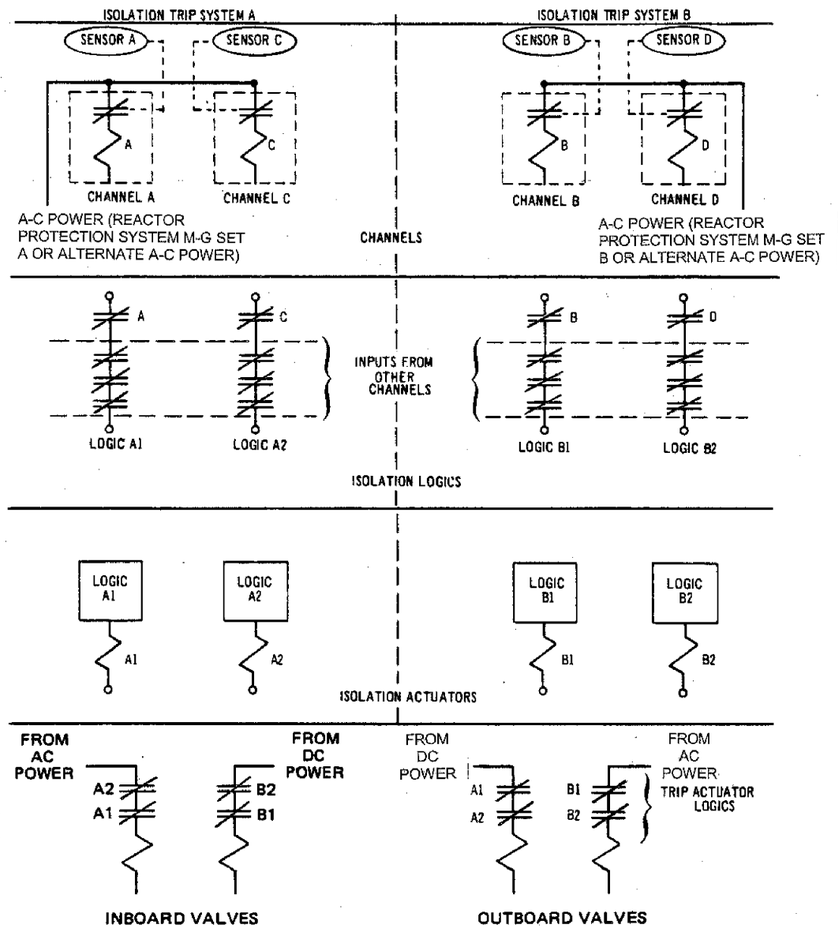

DUANE ARNOLD ENERGY CENTER
NEXTERA ENERGY DUANE ARNOLD, LLC
UPDATED FINAL SAFETY ANALYSIS REPORT

Typical Isolation Control System for
Main Steam Line Isolation Valves

Figure 7.3-4

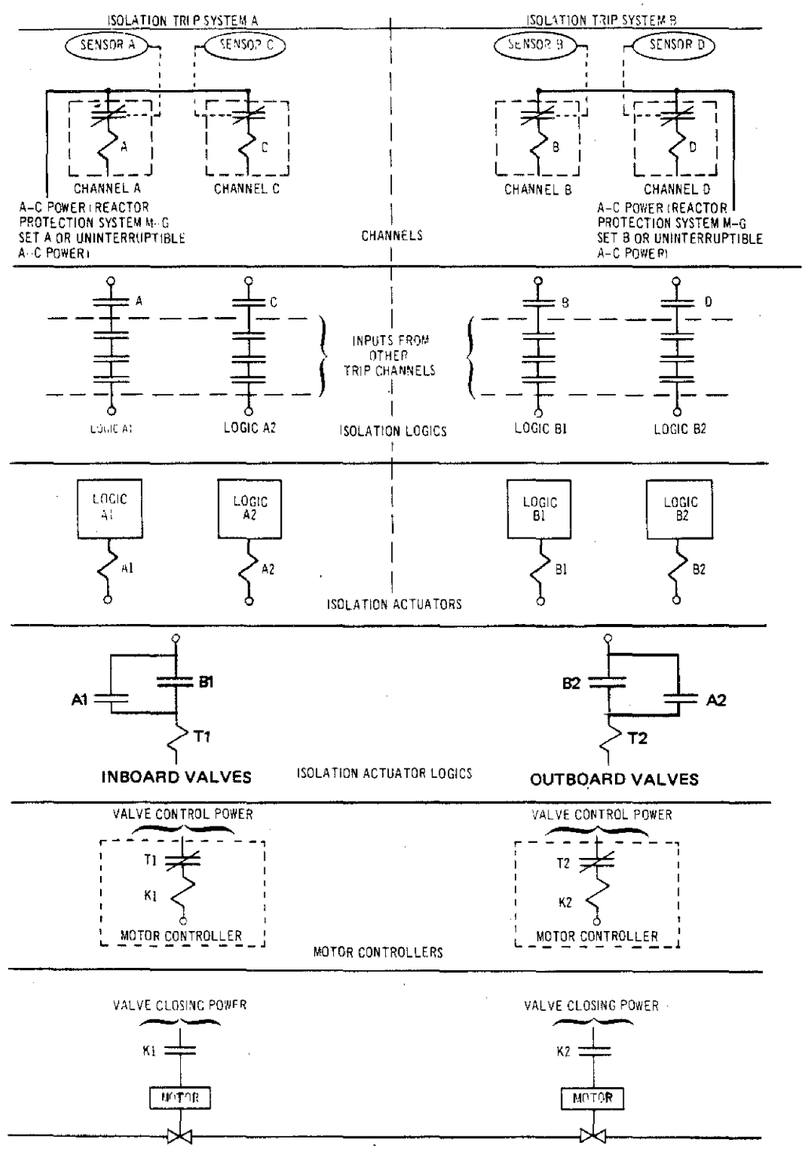

DUANE ARNOLD ENERGY CENTER
IOWA ELECTRIC LIGHT & POWER COMPANY
UPDATED FINAL SAFETY ANALYSIS REPORT

Typical Isolation Control System
Using Motor-Operated Valves

Figure 7.3-5

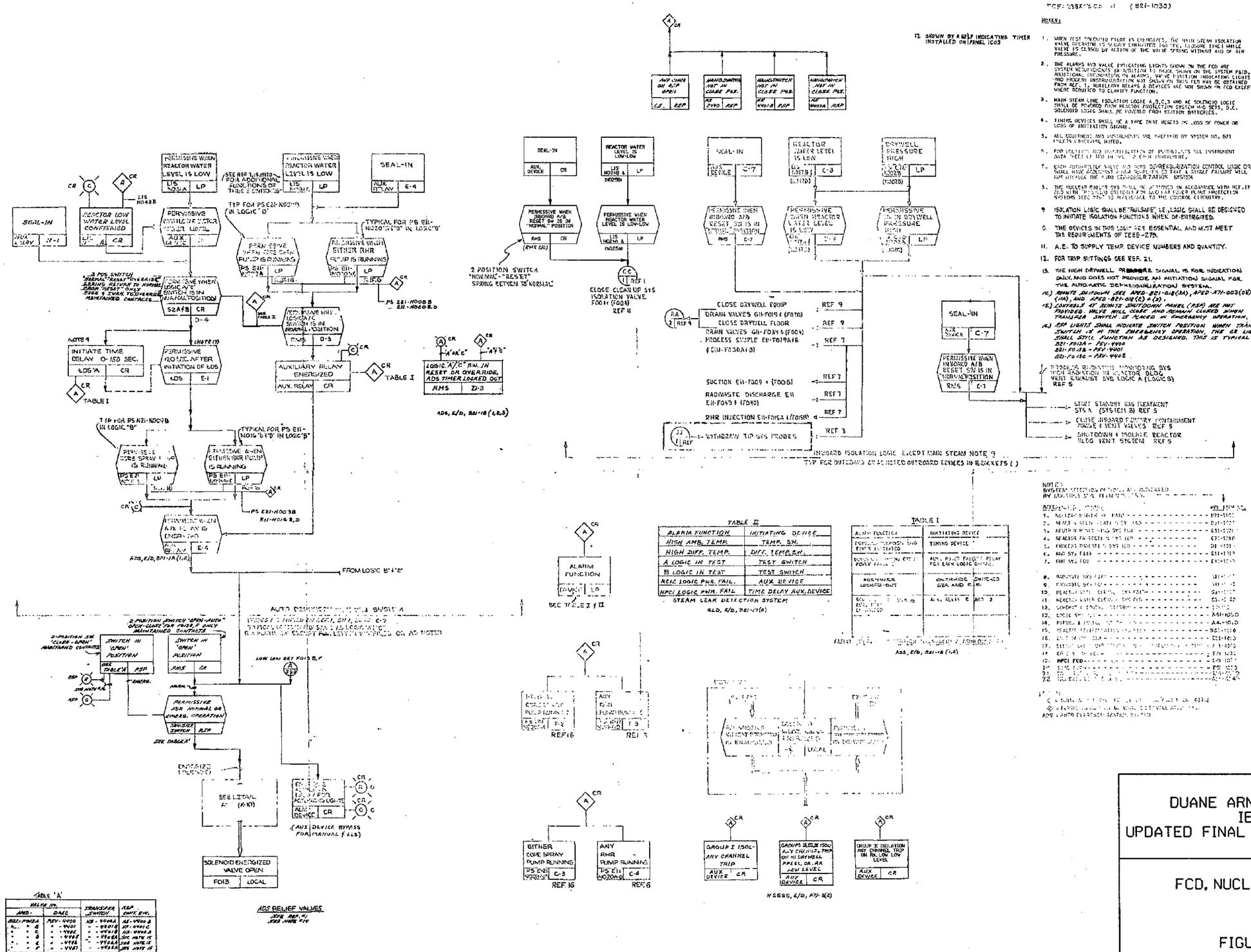

APED-B21-038<1> REV. 8

DUANE ARNOLD ENERGY CENTER
IES UTILITIES
UPDATED FINAL SAFETY ANALYSIS REPORT

FCD, NUCLEAR BOILER SYSTEM

FIGURE 7.3-6 SH. 1

REVISION 13 - 5/97

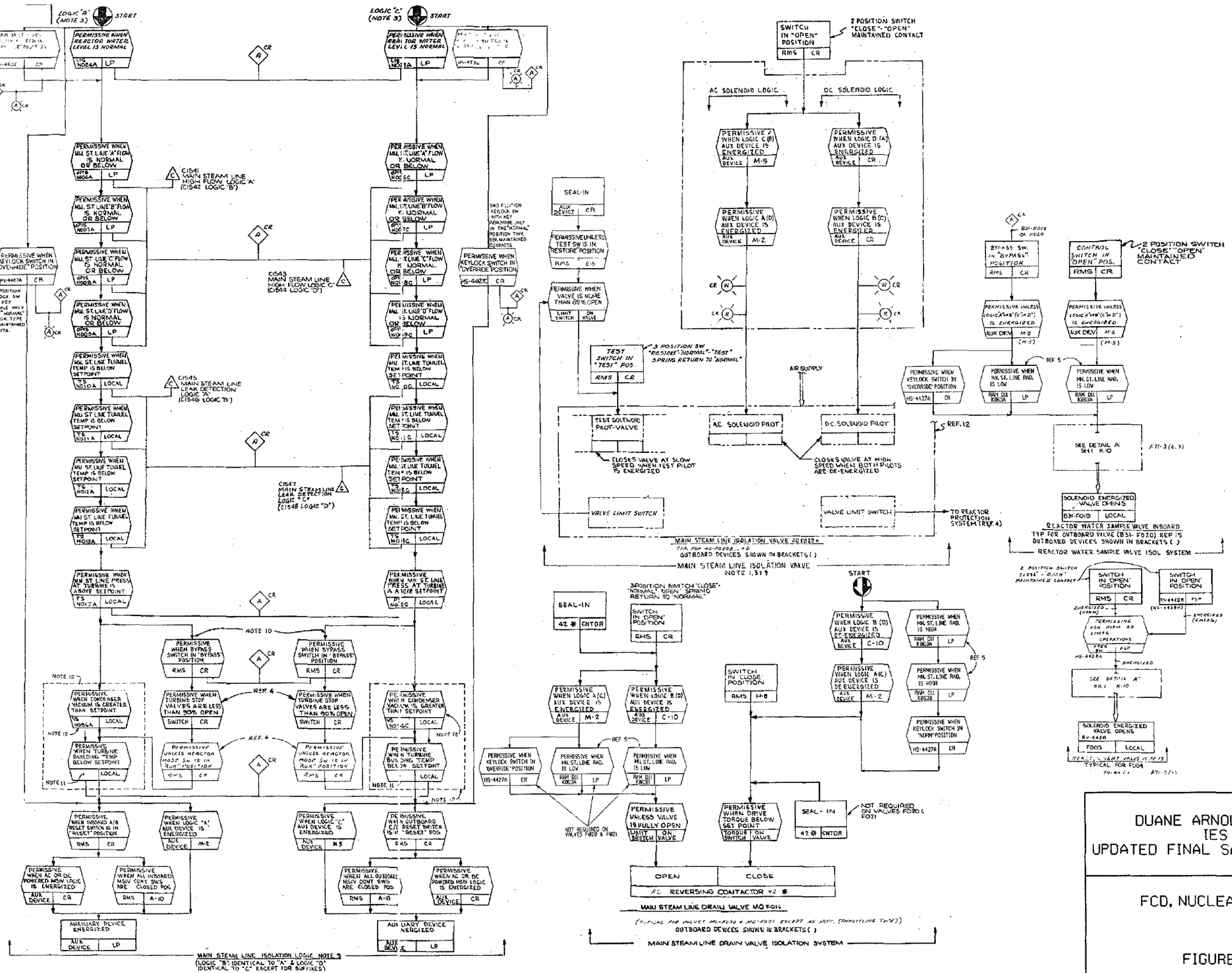

DUANE ARNOLD ENERGY CENTER
IES UTILITIES
UPDATED FINAL SAFETY ANALYSIS REPORT

FCD, NUCLEAR BOILER SYSTEM

FIGURE 7.3-6 SH. 2

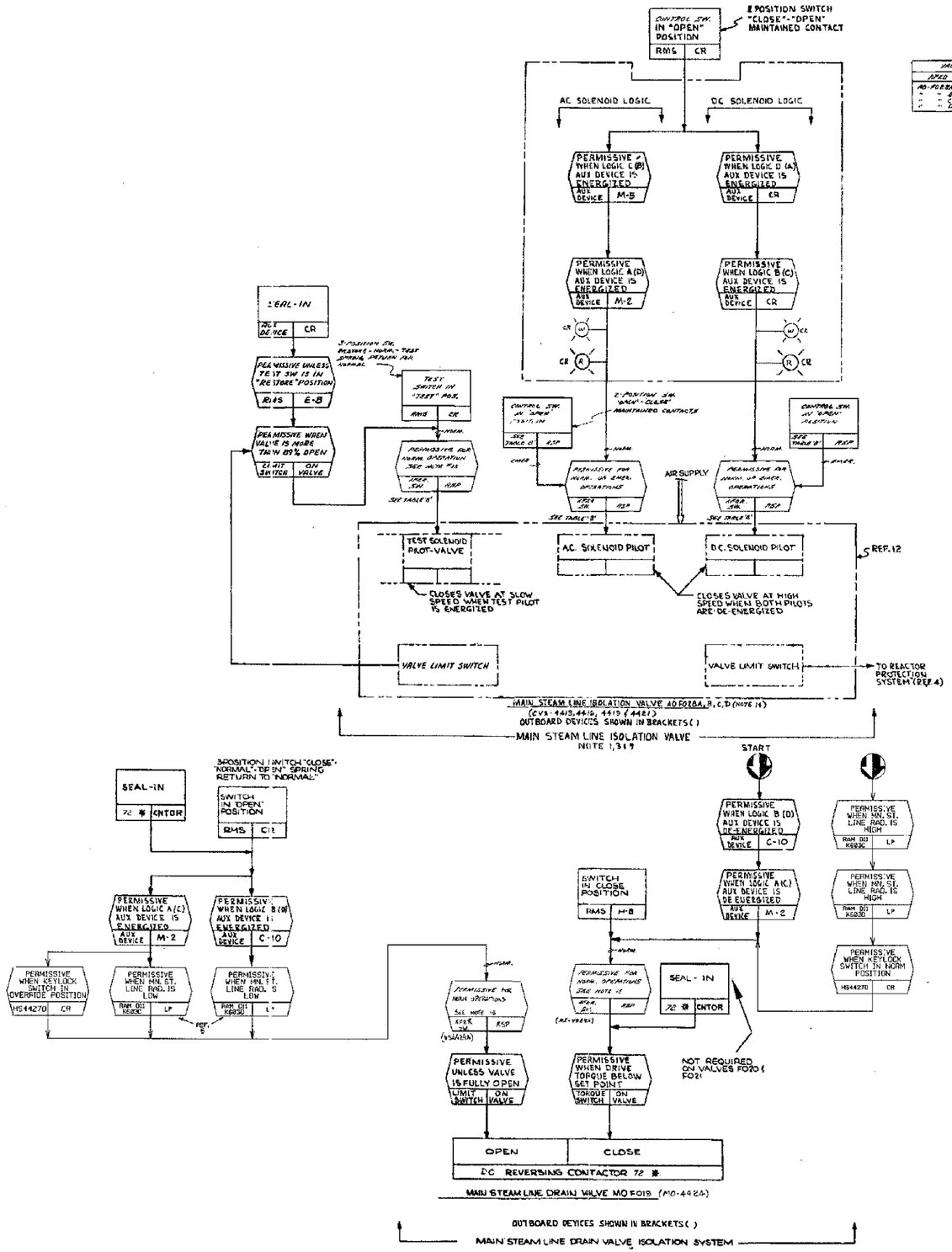

TABLE 'B'

VALVE No.		TRANSFER SWITCH	ESP CONT. SW.
APED	DAEC		
AO-F028A	CV-4413	HS-4413C	HS-4430
" " B	CV-4414	HS-4414C	HS-4440
" " C	CV-4415	HS-4415C	HS-4450
" " D	CV-4461	HS-4461C	HS-4421D

DUANE ARNOLD ENERGY CENTER
IES UTILITIES
UPDATED FINAL SAFETY ANALYSIS REPORT

FCD, NUCLEAR BOILER SYSTEM

FIGURE 7.3-6 SH.2A

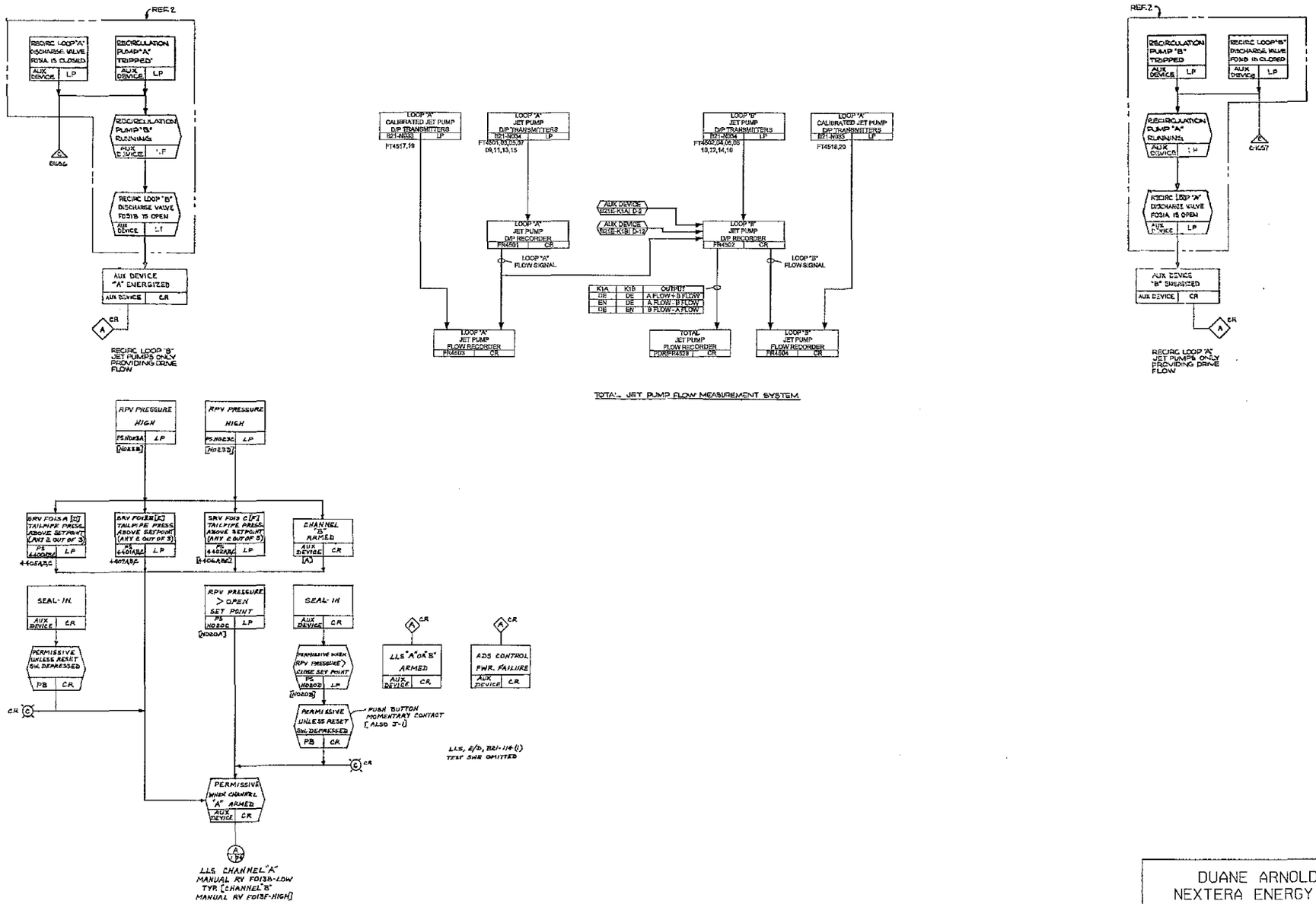

TOTAL JET PUMP FLOW MEASUREMENT SYSTEM

DUANE ARNOLD ENERGY CENTER
NEXTERA ENERGY DUANE ARNOLD, LLC
UPDATED FINAL SAFETY ANALYSIS REPORT

FCD, NUCLEAR BOILER SYSTEM

FIGURE 7.3-6 SHEET 3

REV	CHANGE DETAIL	DATE
1	CHANGE SOLENOID VALVE WIRING ARRANGEMENT	11/30/89
2	NO CHANGE TO THIS DRAWING	12/14/89
3	NO CHANGE TO THIS DRAWING	1/8/90
4	ADD ITEM 15 TO DESCRIPTION	1/18/90
5	WAS SHEET 4 OF 9	1/22/92
6	NO CHANGE TO THIS DRAWING	2/20/92
7	ECR 152 ADD CLUSTER	9/7/94
8	ECR 159 CORRECT TYPOS	10/7/94
9	ECR 162 NO CHANGE TO THIS DRAWING	10/25/94
10	ECR 167 NO CHANGE TO THIS DRAWING	01/21/95
11	ECR 173 NO CHANGE TO THIS DRAWING	01/21/95

GE Nuclear Energy

VPF No. Base Seq. Sheets Rev
6278 . 154 . 04 . 04
Transmittal No. A950048
Signature Date 2/17/95
☒ Approved ☐ Information only
☐ Approved with comments ☐ Approved — Need microfilmable copy
☐ Disapproved

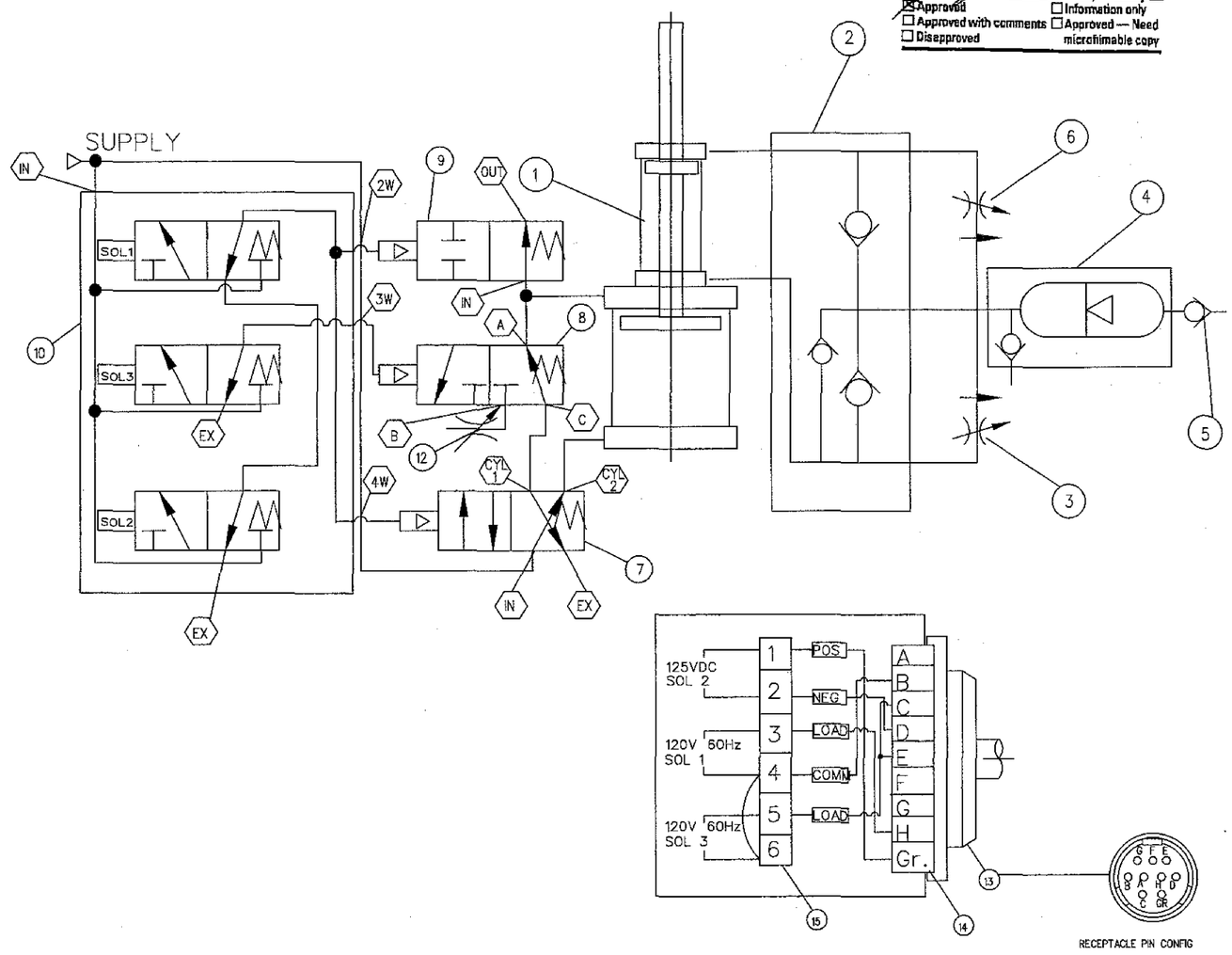

ITEM	DESCRIPTION
1	20"/5" TANDEM CYLINDER x 15" STROKE
2	HYD. MANIFOLD WITH INTEGRAL CHECK VALVE
3 / 82	P.C. FLOW CONTROL VALVE ~ ½" MANATROL~*PCCMS-800-SV20-X0742-EP.
4	GAS CHARGED ACCUMULATOR WITH INTEGRAL HYD. FILL VALVE
5	GAS CHARGING VALVE
6 / 81	P.C. FLOW CONTROL VALVE ~ 1" MANATROL ~ *PCCMS-1600-SV21-X0740-EP
7 / 3	4-WAY AIR CONTROL VALVE NORGREN-*F0013A-EP(MOD. BY R.A.HILLER CO.)
8 / 4	3-WAY AIR CONTROL VALVE NORGREN-*C0007A-EP(MOD. BY R.A.HILLER CO.)
9 / 5	2-WAY AIR CONTROL VALVE NORGREN-*B0004A-EP(MOD. BY R.A.HILLER)
10 / 6	PILOT CONTROL THREE VALVE MANIFOLD SOLENOID OPERATED A.C. /D.C. COILS AUTOMATIC VALVE CO. B6930-081
12 / 8	EXHAUST MUFFLER CONTROL VALVE QUITAIRE-*MM004A
13 / 48	NAMCO~QUICK DISCONNECT, RECEPTACLE *EC210-19001
14 / 49	NAMCO~QUICK DISCONNECT, PLUG-IN *EC210-29025W 25FT. CABLE
15 / 11	ELECTRICAL TERMINAL BLOCK BUCHANAN-*NQ0212006

EQUIPMENT NUMBERS

CV4415
CV4418

NOTES:
1. CIRCUIT SHOWN WITH CYLINDER ROD EXTENDED: ALL SOLENOID VALVES DEENERGIZED.
2. ⬡ INDICATES PORT DESIGNATION AS STAMPED ON VALVES
▭ ITEM NUMBERS, REFER TO ASSEMBLY DRAWINGS.

DUANE ARNOLD ENERGY CENTER
NEXTERA ENERGY DUANE ARNOLD, LLC
UPDATED FINAL SAFETY ANALYSIS REPORT

MAIN STEAM LINE ISOLATION VALVE
SCHEMATIC CONTROL DIAGRAM

FIGURE 7.3-7

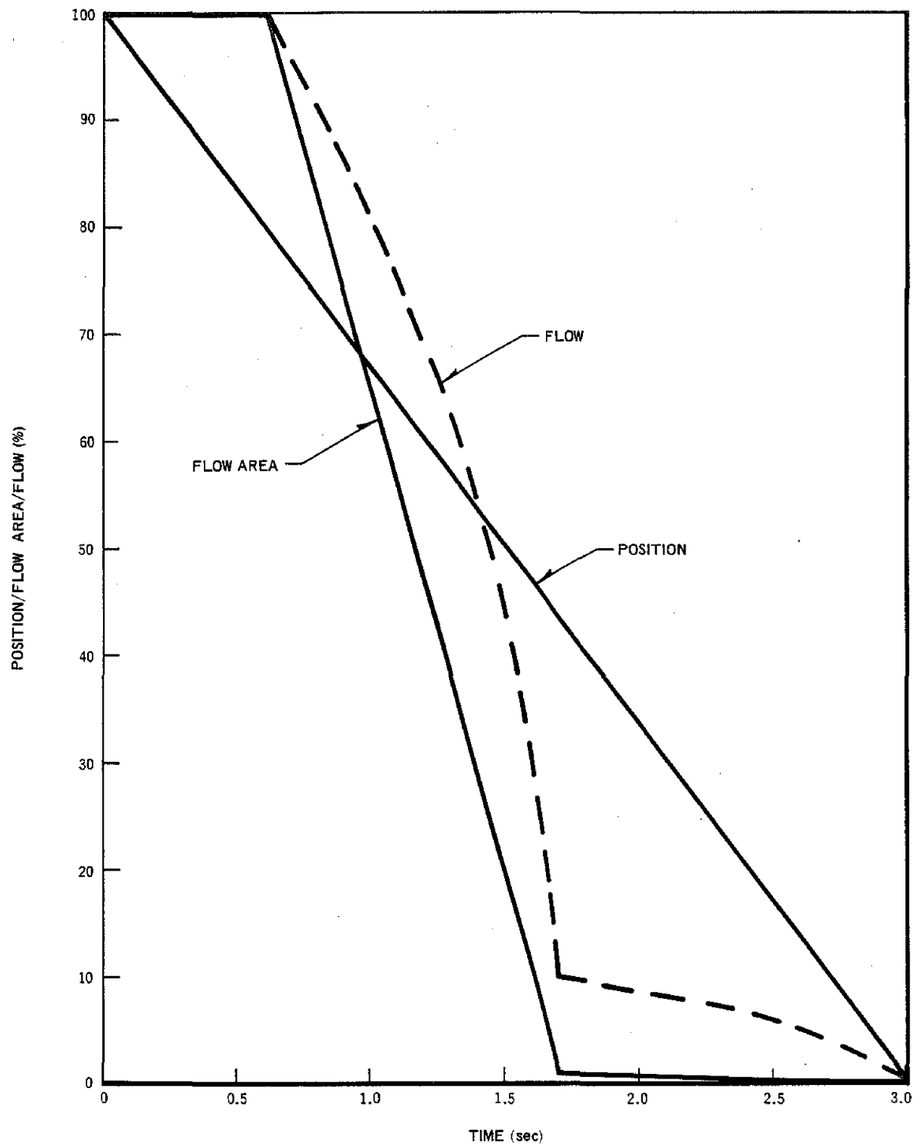

DUANE ARNOLD ENERGY CENTER
IOWA ELECTRIC LIGHT & POWER COMPANY
UPDATED FINAL SAFETY ANALYSIS REPORT

Main Steam Isolation
Valve Performance Characteristics

Figure 7.3-8

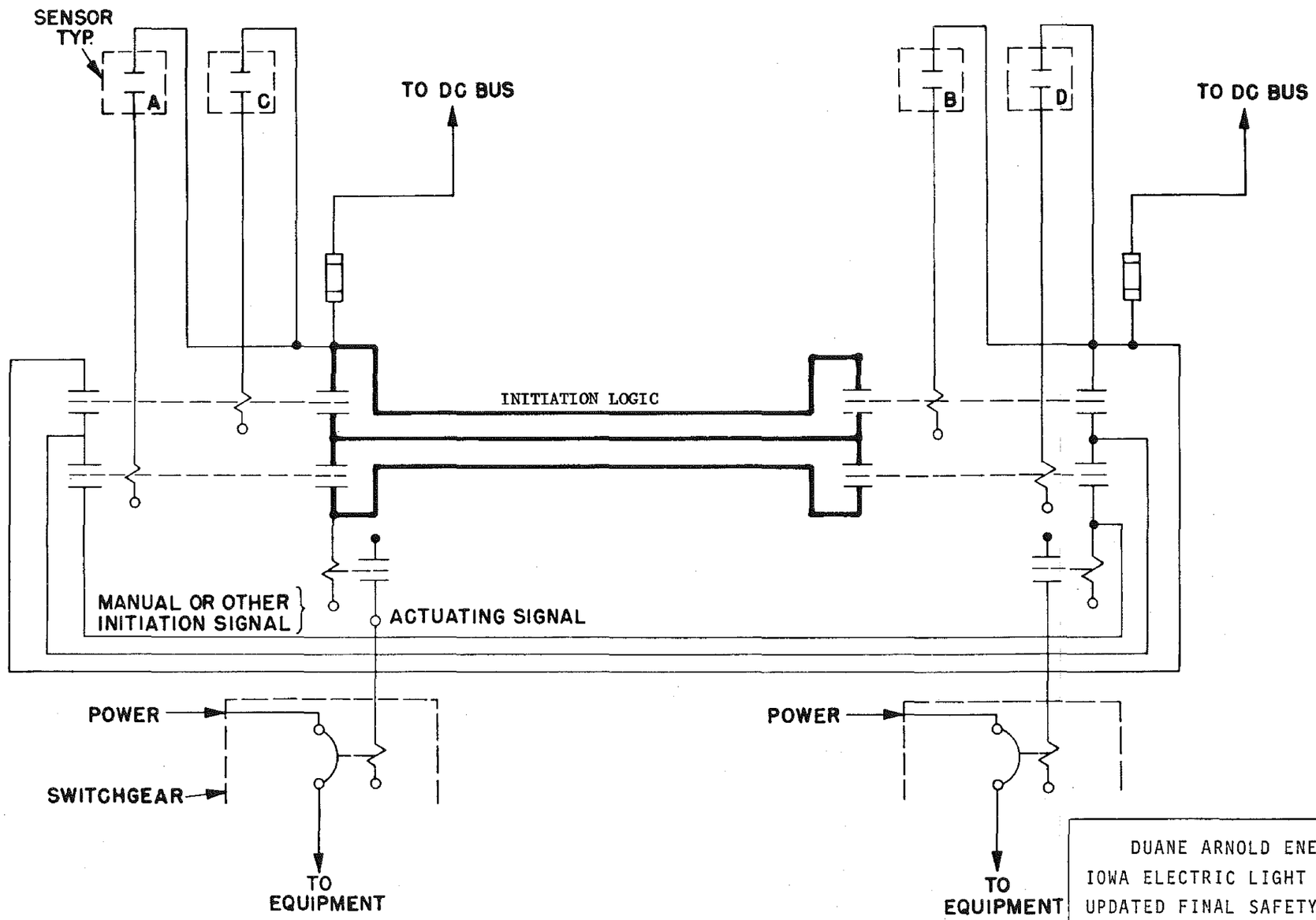

DUANE ARNOLD ENERGY CENTER
IOWA ELECTRIC LIGHT & POWER COMPANY
UPDATED FINAL SAFETY ANALYSIS REPORT

Typical ECCS Actuation and Initiation Logic

Figure 7.3-9

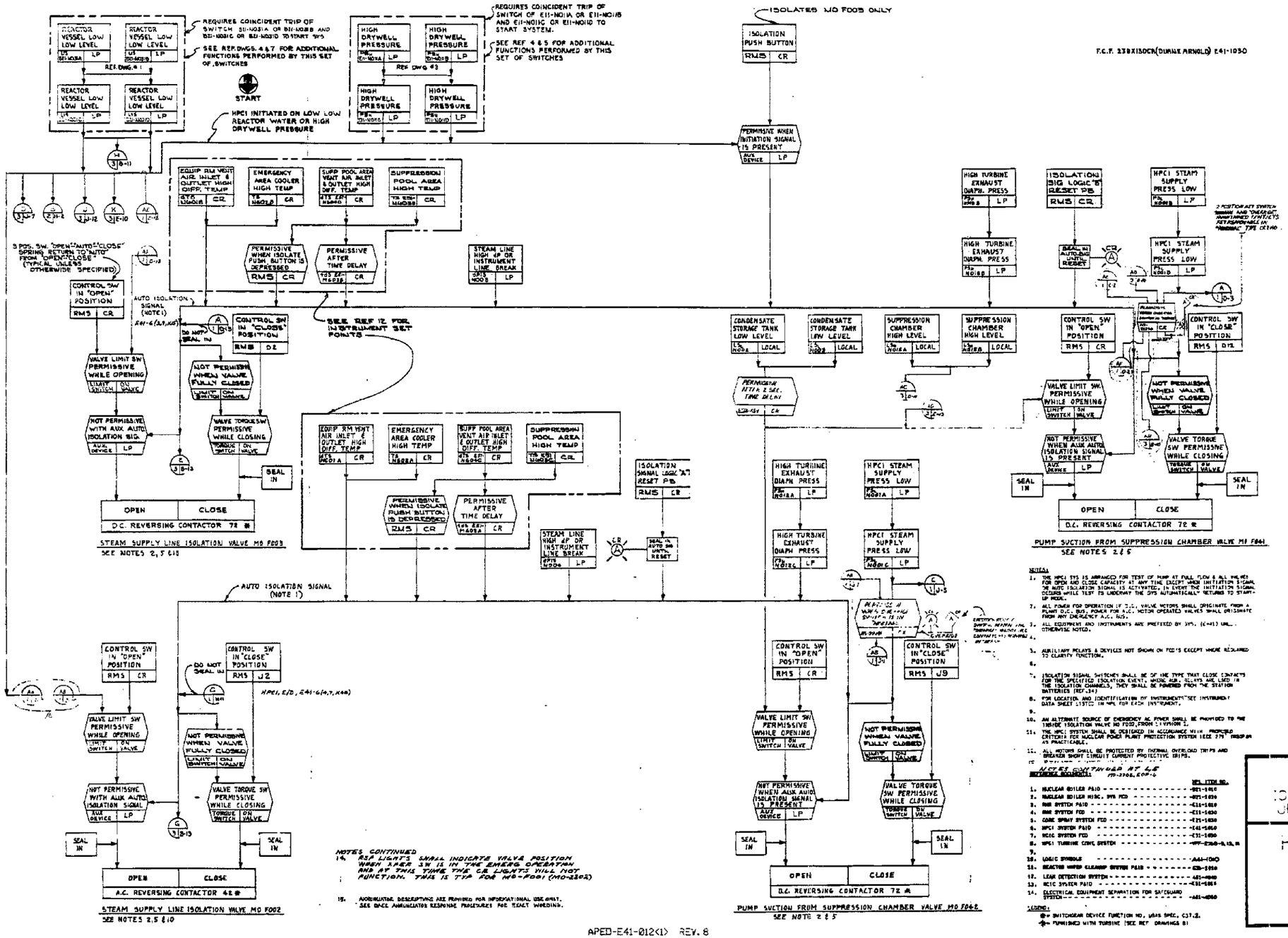

DUANE ARNOLD ENERGY CENTER
IOWA ELECTRIC LIGHT AND POWER COMPANY
UPDATED FINAL SAFETY ANALYSIS REPORT

HIGH PRESSURE COOLANT INJECTION SYSTEM

FIGURE 7.3-10 SH. 1

APED-E41-012(1) REV. 8

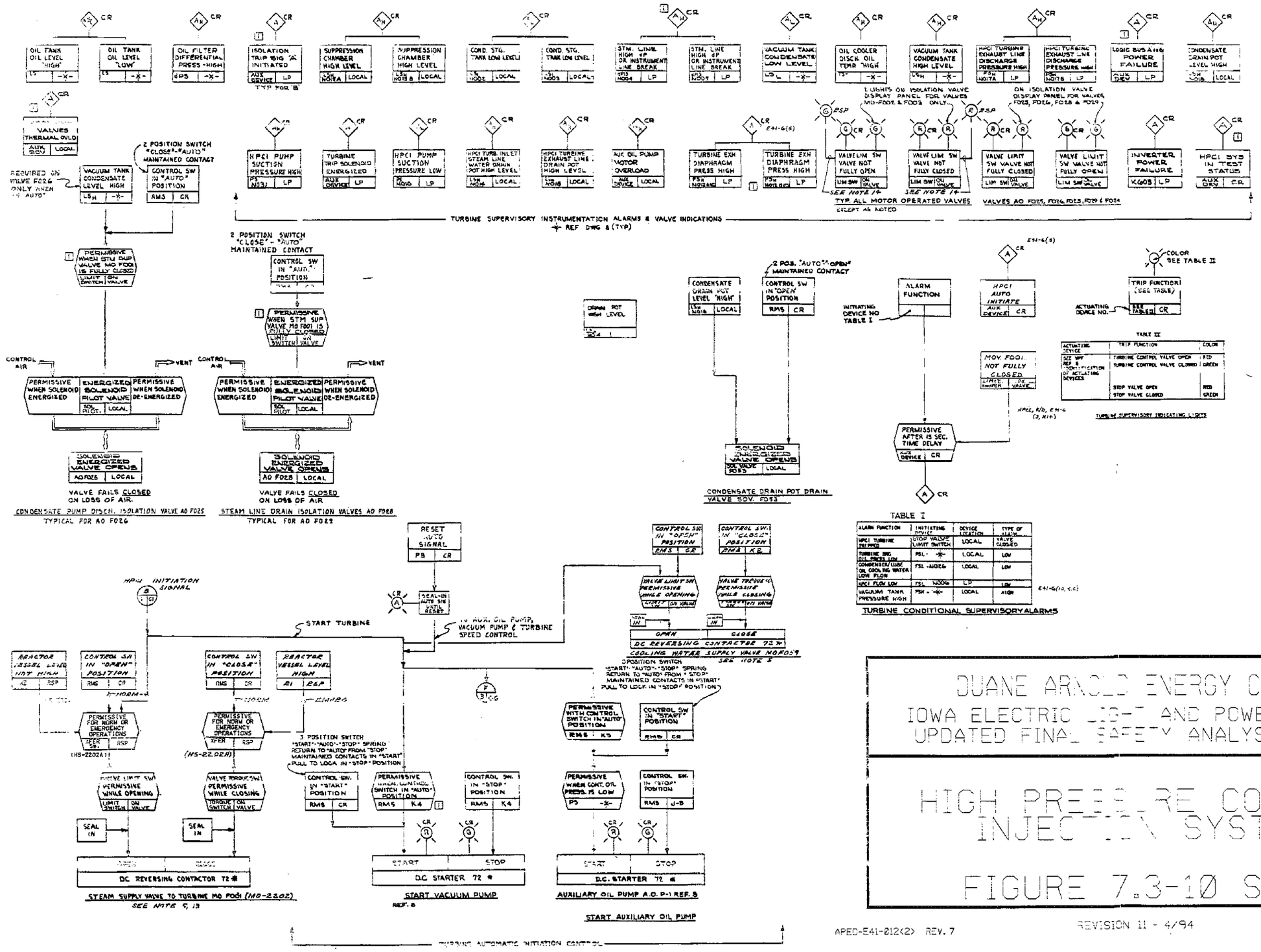

DUANE ARNOLD ENERGY CENTER
IOWA ELECTRIC LIGHT AND POWER COMPANY
UPDATED FINAL SAFETY ANALYSIS REPORT

HIGH PRESSURE COOLANT INJECTION SYSTEM

FIGURE 7.3-10 SH. 2

APED-E41-012(2) REV. 7

REVISION 11 - 4/94

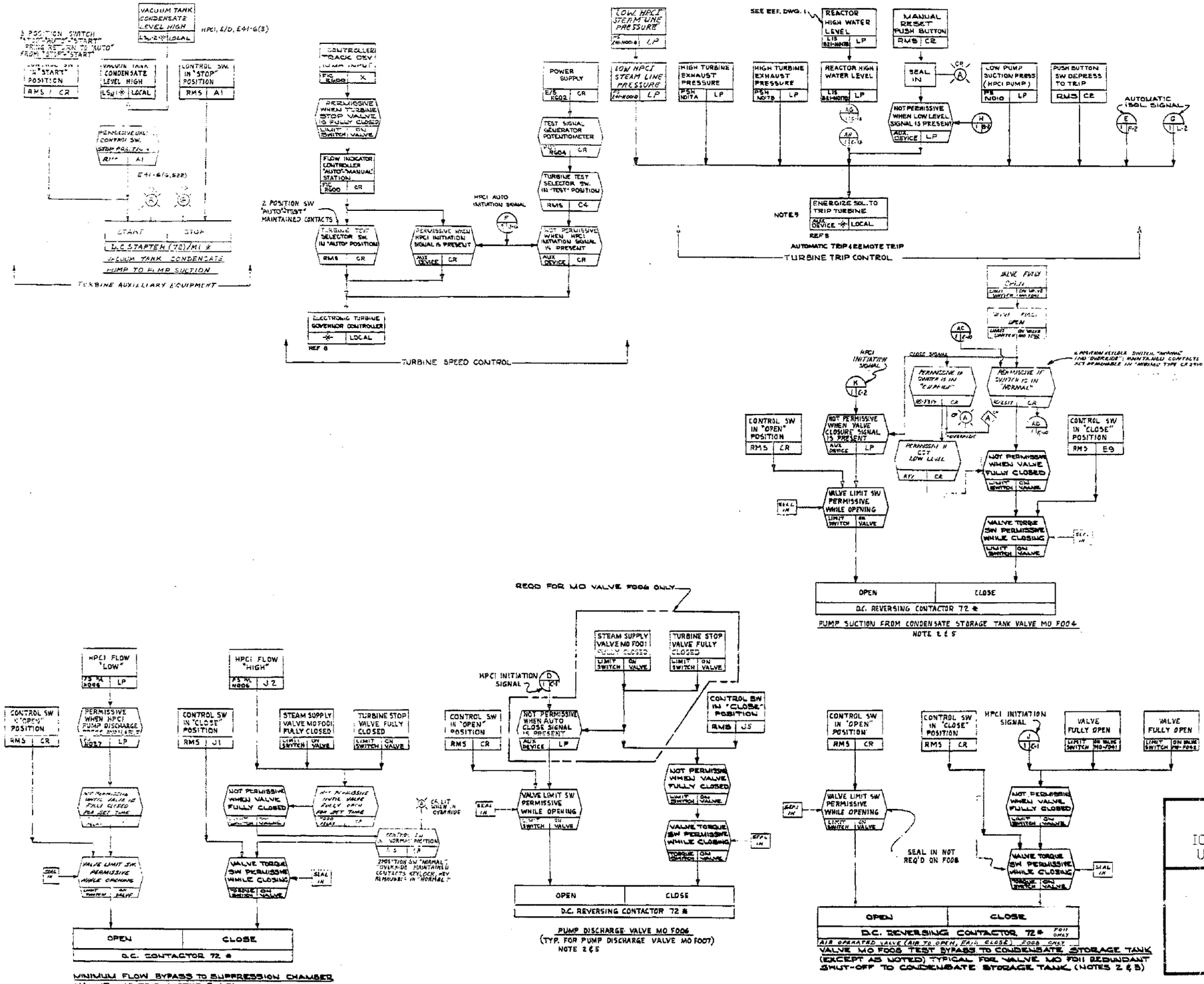

DUANE ARNOLD ENERGY CENTER
IOWA ELECTRIC LIGHT AND POWER COMPANY
UPDATED FINAL SAFETY ANALYSIS REPORT

HIGH PRESSURE COOLANT INJECTION SYSTEM

FIGURE 7.3-10 SH. 3

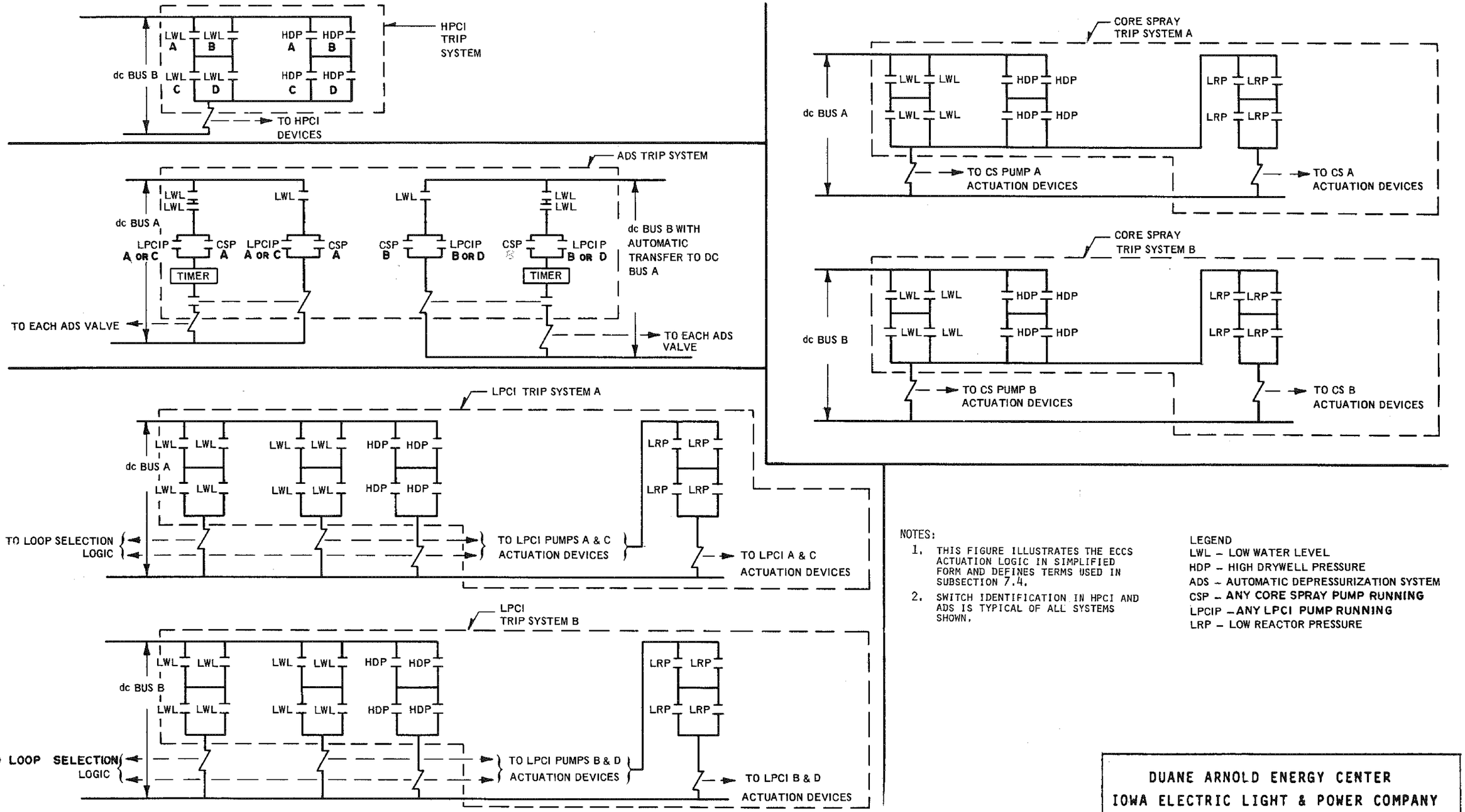

NOTES:

1. THIS FIGURE ILLUSTRATES THE ECCS ACTUATION LOGIC IN SIMPLIFIED FORM AND DEFINES TERMS USED IN SUBSECTION 7.4.
2. SWITCH IDENTIFICATION IN HPCI AND ADS IS TYPICAL OF ALL SYSTEMS SHOWN.

LEGEND

LWL – LOW WATER LEVEL
HDP – HIGH DRYWELL PRESSURE
ADS – AUTOMATIC DEPRESSURIZATION SYSTEM
CSP – ANY CORE SPRAY PUMP RUNNING
LPCIP – ANY LPCI PUMP RUNNING
LRP – LOW REACTOR PRESSURE

DUANE ARNOLD ENERGY CENTER
IOWA ELECTRIC LIGHT & POWER COMPANY
UPDATED FINAL SAFETY ANALYSIS REPORT

Typical ECCS Trip System Actuation Logic
Figure 7.3-11

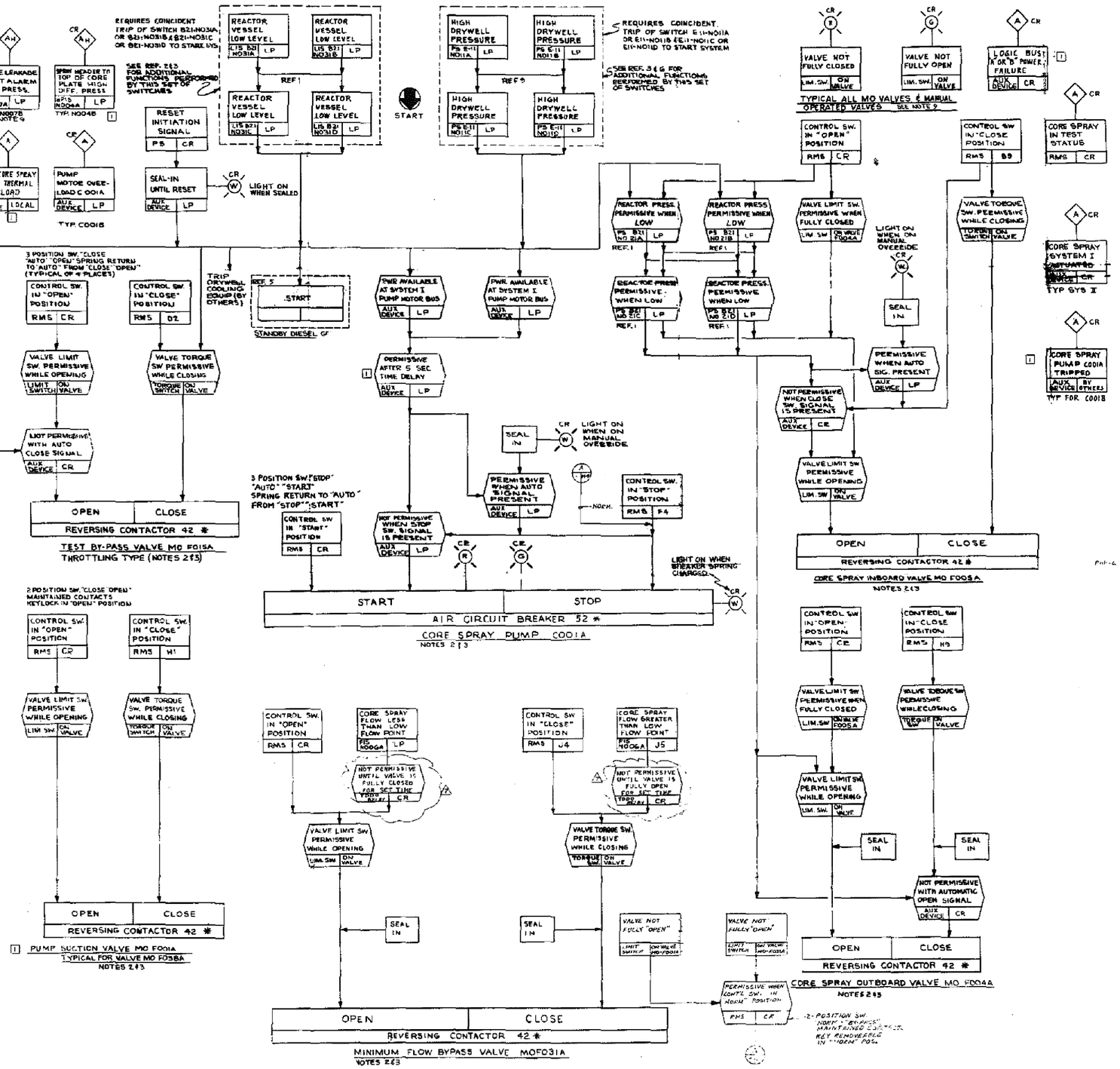

NOTES CONTINUED: FCF 258X129CA E21-1050

13. CONTROL AT REMOTE SHUTDOWN PANEL (RSP) ARE NOT PROVIDED. VALVE WILL CLOSE AND REMAIN CLOSED WHEN TRANSFER SWITCH AT RSP IS PLACED IN EMERGENCY POSITION.

14. RSP LIGHTS SHALL INDICATE VALVE AND PUMP POSITION WHEN TRANSFER SWITCH IS IN EMERGENCY POSITION AND AT TIME ZERO THE CP CHANGE WILL NOT FUNCTION. TIME IS TYPICAL. REF.: MO-F015B — MO-2135
MO-F004A — MO-2160 MO-F047B — MO-2172
MO-F031B — MO-2187 MO-F058 — MO-2196
MO-F015B — MO-2204 C001B — M-2116

NOTES:

1. THE CONTROL SYSTEM AS DRAWN SHOWS SYSTEM I, OPERATING SEQUENCE AFTER LOW WATER LEVEL OR HIGH DRYWELL PRESSURE SIGNAL IS AS FOLLOWS:

CONDITION A	WITH PLANT ON NORMAL AUXILIARY POWER
ACTIVE PUMPS:	
C001A	SYSTEM I STARTS 0 SEC. DELAY
C001B	SYSTEM II STARTS 5 SEC. DELAY
VALVES:	
F004 A	SYSTEM I - OPENS AFTER REACTOR LOW PRESS. PERM.
F004 B	SYSTEM II - OPENS AFTER REACTOR LOW PRESS. PERM.
F005 A	SYSTEM I - OPENS AFTER REACTOR LOW PRESS. PERM.
F005 B	SYSTEM II - OPENS AFTER REACTOR LOW PRESS. PERM.
F015 A	SYSTEM I - CLOSES IF OPEN - NO DELAY
F015 B	SYSTEM II - CLOSES IF OPEN - NO DELAY
F031 A	SYSTEM I - CLOSED AFTER FLOW ESTABLISHED
F031 B	SYSTEM II - CLOSED AFTER FLOW ESTABLISHED

CONDITION B	WITH PLANT ON STANDBY DIESEL POWER
ACTIVE PUMP:	TIME DELAY
C001 A	0 SEC.
C001 B	5 SEC.

VALVES: SAME SEQUENCE AS CONDITION A

2. THE CORE SPRAY SYS. II FOR SYS. I FOR SYS. II FOR SYS. I EXCEPT COMPONENT TAGS ARE MODIFIED AS FOLLOWS.

	SYSTEM I	SYSTEM II
PUMP	C001 A	C001 B
MIN FLOW BYPASS VALVES	F031 A	F031 B
OUTBOARD ISOL. VALVE	F004 A	F004 B
INBOARD ISOL. VALVES	F005 A	F005 B
PUMP SUCTION VALVE	F001 A	F001 B
TEST BYPASS VALVE	F015 A	F015 B
PUMP SUCTION VALVE	F058 A	F058 B

3. PUMP MOTOR CIRCUITS SHALL BE PROVIDED WITH OVERLOAD PROTECTION. OVERLOAD RELAYS SHALL MAINTAIN POWER AS LONG AS POSSIBLE WITHOUT CAUSING DAMAGE TO THE MOTOR OR THE ENERGIZED POWER SYSTEM. VALVE MOTORS SHALL BE PROVIDED WITH OVERLOAD TRIPS AND SHORT CIRCUIT BREAKER PROTECTIVE TRIPS.

4. MOTIVE POWER FOR SYSTEM I PUMPS SHALL ORIGINATE FROM A DIFFERENT EMERGENCY AC BUS THAN POWER FOR SYSTEM II PUMPS.

POWER FOR VALVES IN EACH SYSTEM SHALL ORIGINATE FROM THE SAME BUS SUPPLYING PUMP POWER. CONTROL POWER FOR PUMPS & VALVES OF SYSTEM I SHALL BE FROM A DIFFERENT SOURCE THAN CONTROL POWER FOR SYSTEM II.

5. LOCATION NUMBERS FOR RMS ARE SHOWN IN "ON" OR "AUTO" POSITION BLOCKS ONLY. "X" IN LOCATION OF OTHER POSITIONS INDICATES THAT THESE BLOCKS ARE AN INTEGRAL PART OF THE SWITCH ASSEMBLY BUT REPRESENT A DIFFERENT POSITION OF THE SAME HANDLE.

6. # - SWITCH GEAR DEVICE FUNCTION NUMBERS USAS SPEC. C37.2.

7. ALL EQUIPMENT AND INSTRUMENTS ARE PREFIXED BY SYSTEM NO. (E21) UNLESS OTHERWISE NOTED.

8. FOR LOCATION AND IDENTIFICATION OF INSTRUMENTS SEE THE INSTR. DATA LISTING IN THE MPL FOR EACH INSTRUMENT.

9. SEE REFERENCE P&ID'S FOR ADDITIONAL INFORMATION ON ALARMS, VALVE INDICATING LIGHTS AND PROCESS INSTRUMENTATION.

10. THE CORE SPRAY SYSTEM SHALL BE DESIGNED IN ACCORDANCE WITH "PROPOSED CRITERIA FOR NUCLEAR POWER PLANT PROTECTION SYSTEMS IEEE 279" AS APPLICABLE TO THE CONTROL CIRCUITRY.

11. THE CORE SPRAY SYSTEM SHALL BE DESIGNED IN ACCORDANCE WITH REF. 10.

12. RESET: SHUTDOWN FOR SYSTEM II

REFERENCE DOCUMENTS:

	MPL ITEM NO.
1. NUCLEAR BOILER SYSTEM P&ID	B21-1010
2. NUCLEAR BOILER SYSTEM FCD	B21-1030
3. RESIDUAL HEAT REMOVAL SYSTEM FCD	E11-1030
4. CORE SPRAY SYSTEM P&ID	E21-1010
5. CORE SPRAY SYSTEM DES. SPEC.	E21-4010
6. HPCI SYSTEM FCD	E41-1030
7. RCIC SYSTEM FCD	E51-1030
8. LOGIC SYMBOLS	A81-1030
9. RHR SYSTEM P&ID	E11-1010
10. ELEC. EQUIP SPC FOR SAFEGUARD SYS.	A61-4050

DUANE ARNOLD ENERGY CENTER
IOWA ELECTRIC LIGHT & POWER COMPANY
UPDATED FINAL SAFETY ANALYSIS REPORT

Core Spray System

Figure 7.3-12, Sheet 1

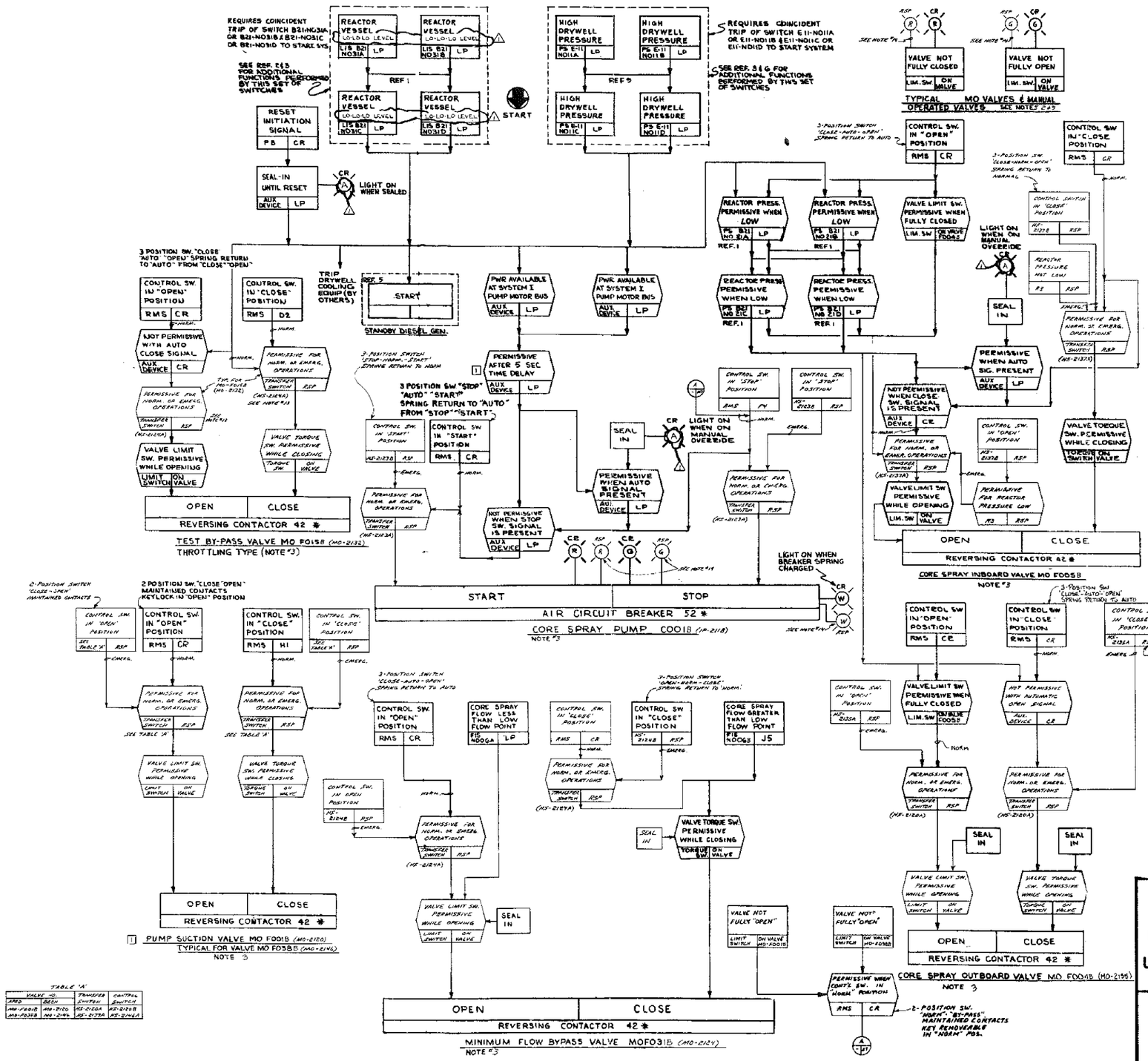

DUANE ARNOLD ENERGY CENTER
IOWA ELECTRIC LIGHT & POWER COMPANY
UPDATED FINAL SAFETY ANALYSIS REPORT

Core Spray System

Figure 7.3-12, Sheet 2

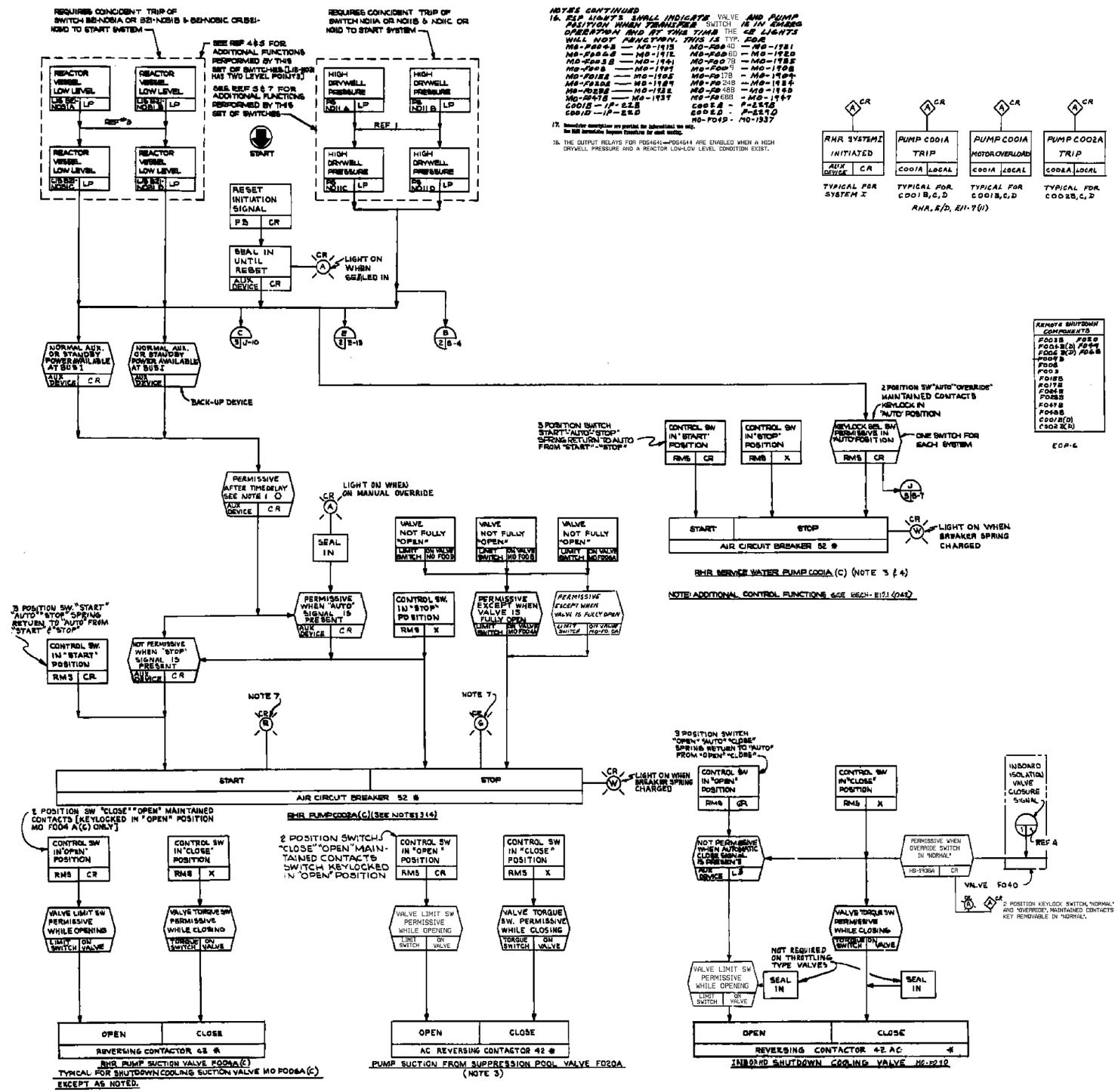

NOTES CONTINUED

16. REP LIGHTS SHALL INDICATE VALVE AND PUMP POSITION WHEN TRANSFER SWITCH IS IN EMERG OPERATION AND AT THIS TIME THE CR LIGHTS WILL NOT FUNCTION. THIS IS TYP. FOR

MO-F004A	MO-1913	MO-F004D	MO-1921
MO-F004B	MO-1912	MO-F004C	MO-1920
MO-F004B	MO-1911	MO-F007B	MO-1922
MO-F008	MO-1907	MO-F009	MO-1908
MO-F015A	MO-1905	MO-F017B	MO-1904
MO-F015B	MO-1906	MO-F024B	MO-1916
MO-F022B	MO-1932	MO-F048B	MO-1940
MO-F047B	MO-1937	MO-F068B	MO-1947
C001B - IP-E2B		C002B - P-E2B	
C001D - IP-E2D		C002D - P-E2D	
		MO-F049	MO-1937

17. Remainder exceptions are posted for informational use only. See BWR Instrumentation Diagram Procedure for exact wording.

18. THE OUTPUT RELAYS FOR PDS4641-PDS4644 ARE ENABLED WHEN A HIGH DRYWELL PRESSURE AND A REACTOR LOW-LOW LEVEL CONDITION EXIST.

REMOTE SHUTDOWN COMPONENTS	
F003B	F020
F003B(2)	F024
F006 B(2)	F006B
F009B	
F006	
F003	
F015B	
F017B	
F064B	
F063	
F067B	
F048B	
C001B(D)	
C002 B(A)	

ECP-6

NOTES:

1. THE CONTROL SYSTEM AS DRAWN SHOWS SYSTEM I. THE OPERATING SEQUENCE AFTER LOW WATER LEVEL SIGNAL OR HIGH DRYWELL PRESSURE IS AS FOLLOWS:

CONDITION A	PLANT ON NORMAL AUXILIARY POWER
PUMP - C002A	STARTS 10 SEC. DELAY
PUMP - C002B	STARTS 15 SEC. DELAY
PUMP - C002C	STARTS 10 SEC. DELAY
PUMP - C002D	STARTS 15 SEC. DELAY
VALVES:	
F017A	OPENS AFTER REACTOR LOW PRESSURE PERMISSIVE
F018A	OPENS AFTER REACTOR LOW PRESSURE PERMISSIVE
CONT COOLING F008A, F009A, F028A, F024A, F027A	CLOSE, IF OPEN, (NORMALLY MAINTAINED CLOSED)

HEAT EXCH. VALVE F048A - CLOSES (IF OPEN)
SERVICE WATER PUMPS C004A, C, B, D. STOP IF RUNNING

CONDITION B	PLANT ON STANDBY DIESEL POWER
PUMP	○ SET TIME DELAY DEVICE INITIALLY
PUMP - C002A	10 SECS.
PUMP - C002C	15 SECS.
PUMP - C002B	10 SECS.
PUMP - C002D	15 SECS.

VALVES - SEQUENCE SAME AS CONDITION A

SERVICE PUMPS - SAME AS CONDITION A

2. MANUAL CONTROL SYS FOR THROTTLING TYPE MO VALVES SHALL BE DESIGNED TO ALLOW VALVES TO BE STOPPED AT ANY DESIRED POSITION.

3. SYSTEM I CKTS WITH SUFFIXES B & C ARE SHOWN ON THIS DWG. SYSTEM II CKTS WITH SUFFIXES B,D AND REMOTE SHUTDOWN LOGICS ARE SHOWN ON DRAWINGS APED-E11-009(1A), (2A), & (3A).

4. PUMP MOTORS SHALL BE PROTECTED WITH OVERLOAD TRIPS. OVERLOAD RELAYS TO BE APPLIED SO AS TO MAINTAIN POWER ON MOTOR AS LONG AS POSSIBLE WITHOUT IMMEDIATE DAMAGE TO MOTORS OR HARM TO EMERGENCY POWER SYSTEM. VALVE MOTORS SHALL BE PROVIDED WITH OVERLOAD TRIPS. IN ADDITION VALVE MOTORS ARE TO BE PROVIDED WITH BREAKER SHORT CIRCUIT CURRENT PROTECTIVE TRIPS.

5. AUXILIARY RELAYS & DEVICES ARE NOT SHOWN ON THE FUNCTIONAL CONTROL DIAGRAM EXCEPT WHERE NEEDED TO CLARIFY THE FUNCTIONAL REQUIREMENTS.

6. MOTIVE POWER FOR SYSTEM I PUMPS SHALL ORIGINATE FROM A DIFFERENT EMERGENCY AC BUS THAN THE PUMPS OF SYSTEM II.
   MOTIVE POWER FOR INJECTION VALVES IN BOTH SYSTEMS SHALL BE CONNECTABLE TO ALTERNATE EMERGENCY SOURCES. POWER FOR OTHER VALVES IN EACH SYSTEM SHALL ORIGINATE FROM THE SAME BUS SUPPLYING PUMP POWER. LOGIC CONTROL POWER FOR SYSTEM I SHALL BE FROM A DIFFERENT SOURCE THAN SYSTEM II.

7. STATUS LIGHTS SHALL BE AS FOLLOWS: (SEE NOTE 16)
   VALVES: GREEN ON FOR CLOSED POSITION
   RED ON FOR OPEN POSITION
   BOTH ON FOR INTERMEDIATE POSITION
   PUMPS: RED ON FOR PUMP RUNNING
   GREEN ON FOR PUMP STOP

8. ALL AUX. TIMING DEVICES SHALL BE ADJUSTABLE FROM 0 TO FULL SCALE. FULL SCALE SHALL BE AT LEAST 1-1/2 TIMES GREATER THAN SPECIFIED TIME SETTINGS.

9. ALL EQUIPMENT & INSTRUMENTS ARE PREFIXED BY E11, UNLESS OTHERWISE NOTED.

10. THE FOUR PRESSURE SWITCHES ARE ARRANGED FOR ONE OUT OF TWO TWICE LOGIC, SIMILAR TO RISER 4P LOGIC SHOWN SHEET 7, E-3.

11. FOR LOCATION AND IDENTIFICATION OF INSTRUMENTS SEE INSTRUMENT DATA SHEET LISTED IN MPL FOR EACH INSTRUMENT.

12. THE SENSING CIRCUIT FOR BREAK DETECTION AND VALVE SELECTION IS TO BE ARRANGED SO THAT FAILURE OF A SINGLE DEVICE OR CIRCUIT TO FUNCTION ON DEMAND WILL NOT PREVENT CORRECT SELECTION OF LOOP FOR INJECTION.

13. THE RESIDUAL HEAT REMOVAL SYSTEM SHALL BE DESIGNED IN ACCORDANCE WITH "PROPOSED CRITERIA FOR NUCLEAR POWER PLANT PROTECTION SYSTEMS IEEE 279", AS APPLICABLE TO THE CONTROL CIRCUITRY.

14. THE RESIDUAL HEAT REMOVAL SYSTEM SHALL BE DESIGNED IN ACCORDANCE WITH REF. 10.

15. NO CONTROL SW AT REMOTE SHUTDOWN PANEL (RSP). VALVE WILL CLOSE & REMAIN CLOSED UPON XFER FROM NORMAL TO EMERG.

NOTES CONTINUED AT (A-6)

REFERENCE DOCUMENTS:	MPL ITEM NO.
1. RESIDUAL HEAT REMOVAL SYSTEM P&ID	-E11-1010
2. LOGIC SYMBOLS	-A41-1030
3. NUCLEAR BOILER SYS P&ID	-B21-1010
4. NUCLEAR BOILER SYS FCD	-B21-1030
5. CORE SPRAY SYS P&ID	-C21-1010
6. RECIRC. FLOW CONTROL SYS P&ID	-B33-1010
7. HPCI SYS FCD	-E41-1030
8. RCIC SYS FCD	-E51-1030
9. REACTOR RECIRC. SYS P&ID	-B33-1010
10. ELECTRICAL EQUIPMENT SEPARATION FOR SAFEGUARD SYS	-A81-4030
11. REACTOR RECIRCULATION SYSTEM FCD	-B81-1030

LEGEND:
= SWITCHGEAR DEVICE FUNCTION NUMBER USAS SPEC. C37.2.

DUANE ARNOLD ENERGY CENTER
NEXTERA ENERGY DUANE ARNOLD, LLC
UPDATED FINAL SAFETY ANALYSIS REPORT

RESIDUAL HEAT REMOVAL SYSTEM

FIGURE 7.3-13 SHEET 1

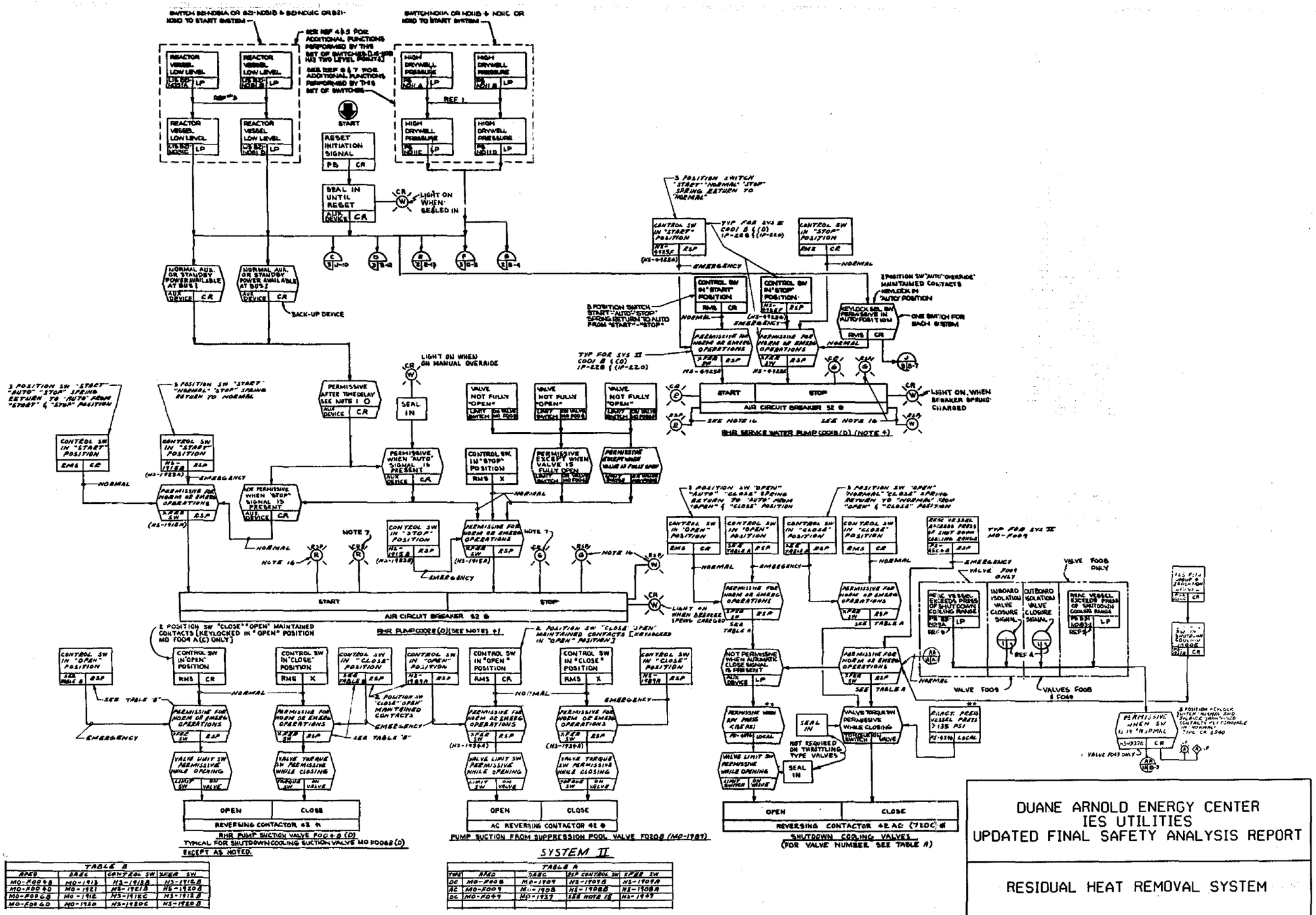

TABLE B			
BREG	BREC	CONTROL SW	XFER SW
MO-F004B	MO-1913	HS-1913B	HS-1913B
MO-F004D	MO-1921	HS-1921B	HS-1920B
MO-F008B	MO-1912	HS-1912C	HS-1912B
MO-F008D	MO-1920	HS-1920C	HS-1920B

TABLE A					
TYPE	BREG	BREC	RSP CONTROL SW	XFER SW
DC	MO-F008	MO-1909	HS-1909B	HS-1909B
AC	MO-F009	MO-1908	HS-1908B	HS-1908B
DC	MO-F049	MO-1937	SEE NOTE 12	HS-1949

DUANE ARNOLD ENERGY CENTER
IES UTILITIES
UPDATED FINAL SAFETY ANALYSIS REPORT

RESIDUAL HEAT REMOVAL SYSTEM

FIGURE 7.3-13 SH. 1A

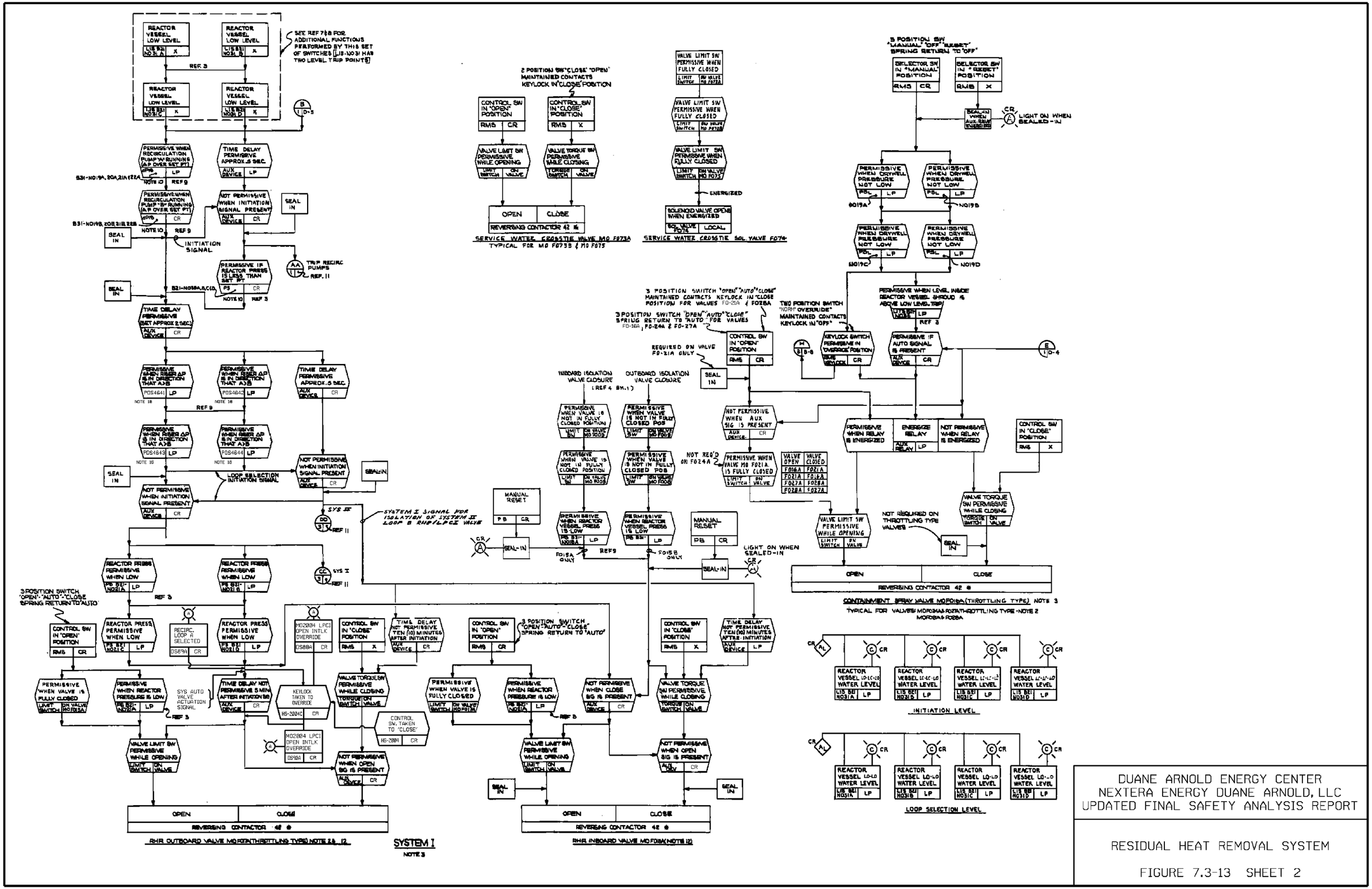

DUANE ARNOLD ENERGY CENTER
NEXTERA ENERGY DUANE ARNOLD, LLC
UPDATED FINAL SAFETY ANALYSIS REPORT

RESIDUAL HEAT REMOVAL SYSTEM

FIGURE 7.3-13 SHEET 2

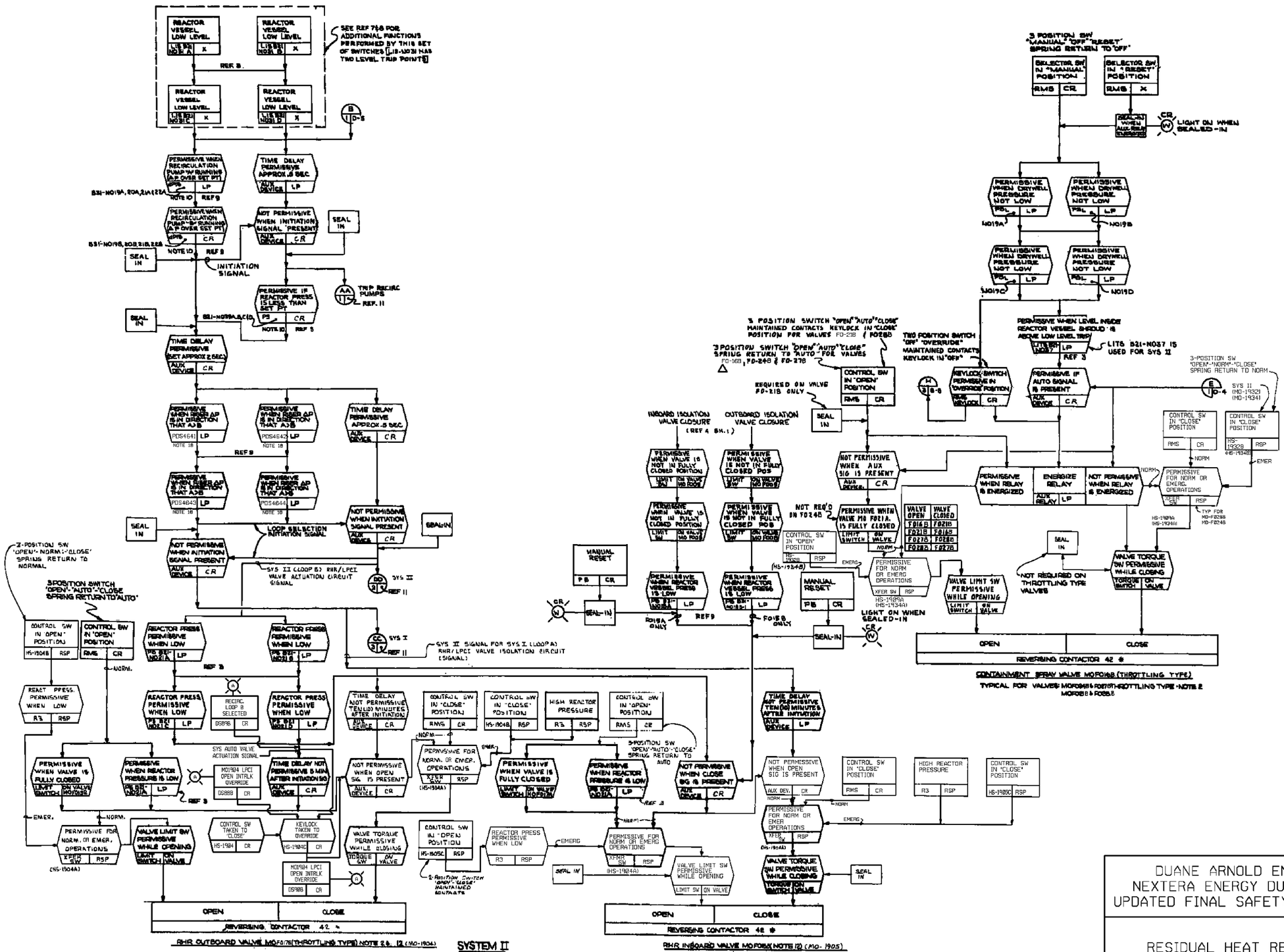

DUANE ARNOLD ENERGY CENTER
NEXTERA ENERGY DUANE ARNOLD, LLC
UPDATED FINAL SAFETY ANALYSIS REPORT

RESIDUAL HEAT REMOVAL SYSTEM

FIGURE 7.3-13 SHEET 2A

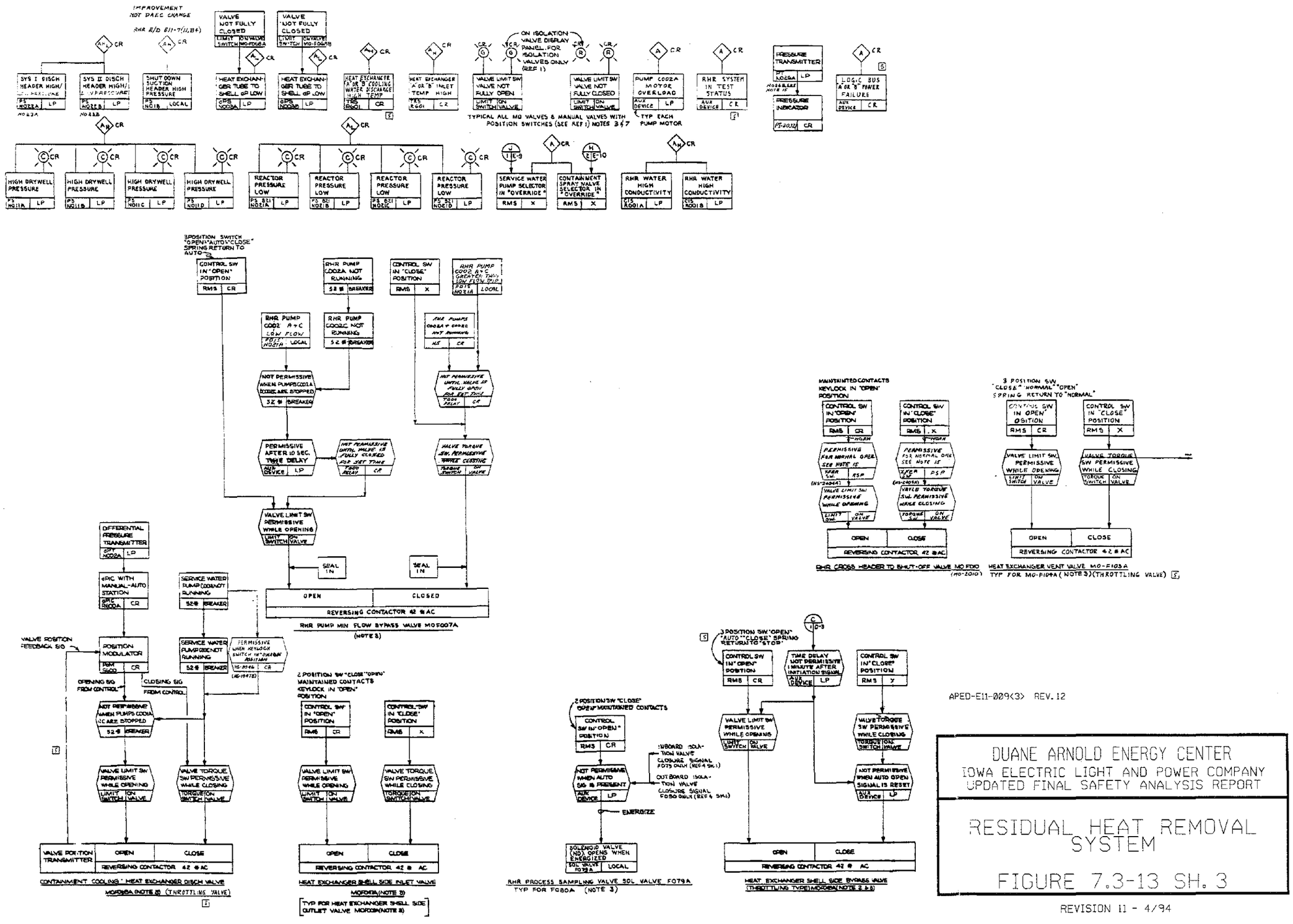

APED-E11-009(3) REV. 12

DUANE ARNOLD ENERGY CENTER
IOWA ELECTRIC LIGHT AND POWER COMPANY
UPDATED FINAL SAFETY ANALYSIS REPORT

RESIDUAL HEAT REMOVAL SYSTEM

FIGURE 7.3-13 SH. 3

REVISION 11 - 4/94

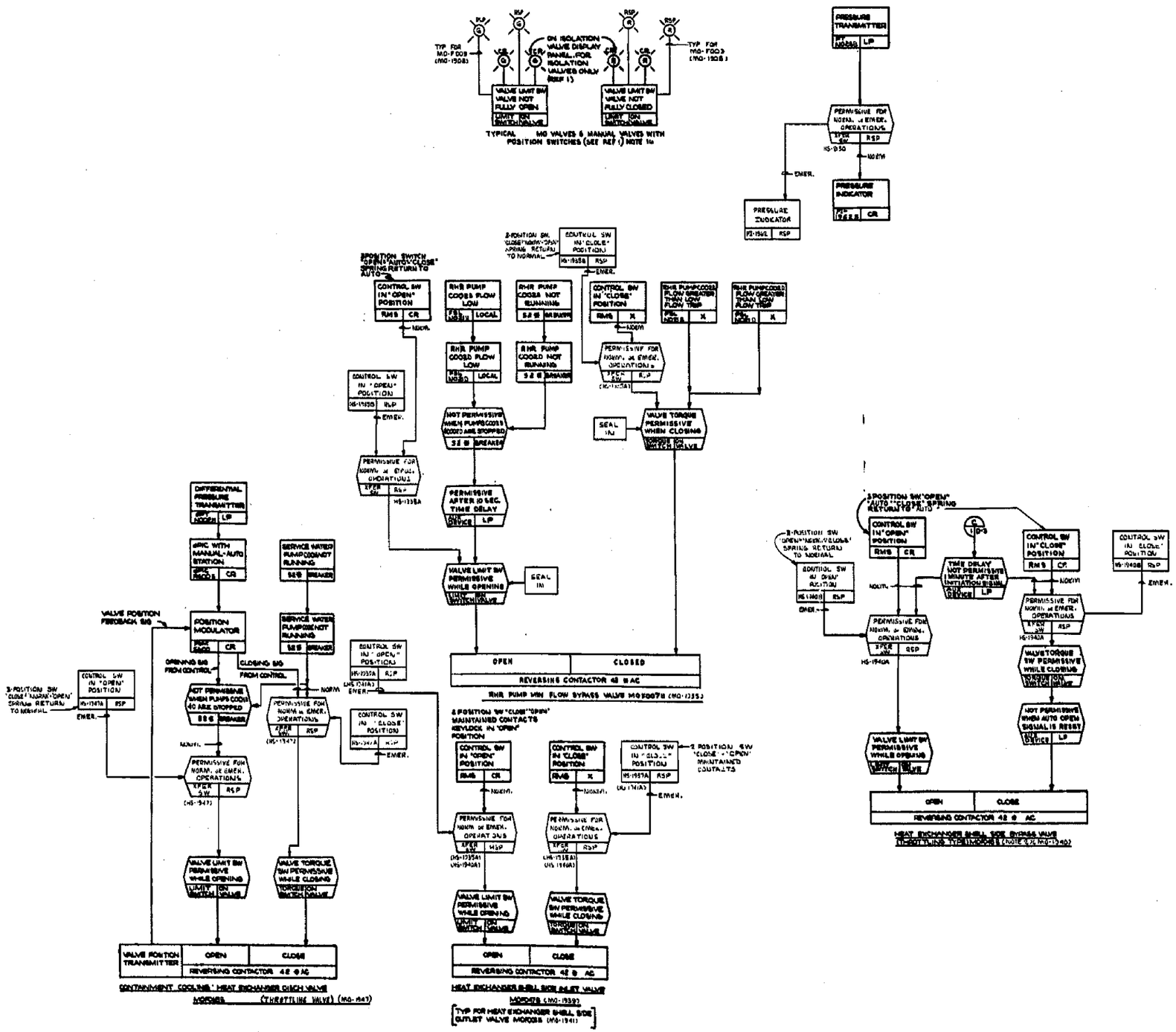

DUANE ARNOLD ENERGY CENTER
IES UTILITIES
UPDATED FINAL SAFETY ANALYSIS REPORT

RESIDUAL HEAT REMOVAL SYSTEM

FIGURE 7.3-13 SH. 3A

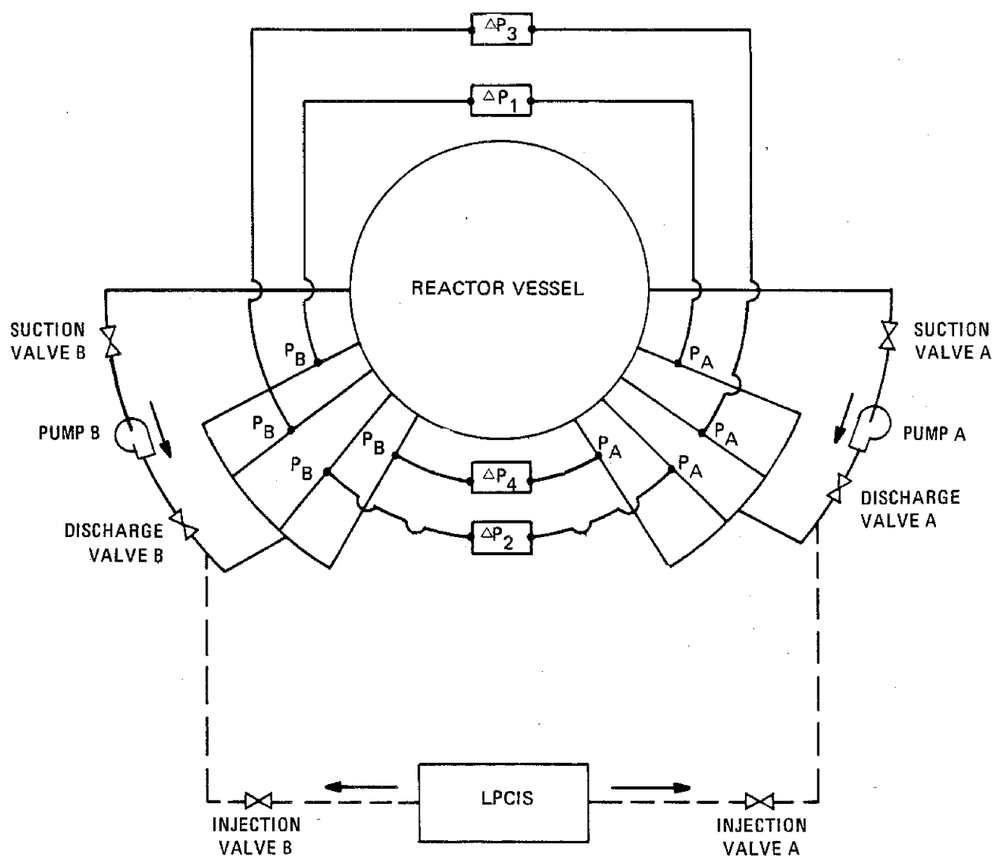

WHERE $P_1 = P_A - P_B$

DUANE ARNOLD ENERGY CENTER
IOWA ELECTRIC LIGHT & POWER COMPANY
UPDATED FINAL SAFETY ANALYSIS REPORT

LPCI Break Detection Logic
Component Arrangement

Figure 7.3-14

FCF 238X114CA (DUANE ARNOLD) B31-1020

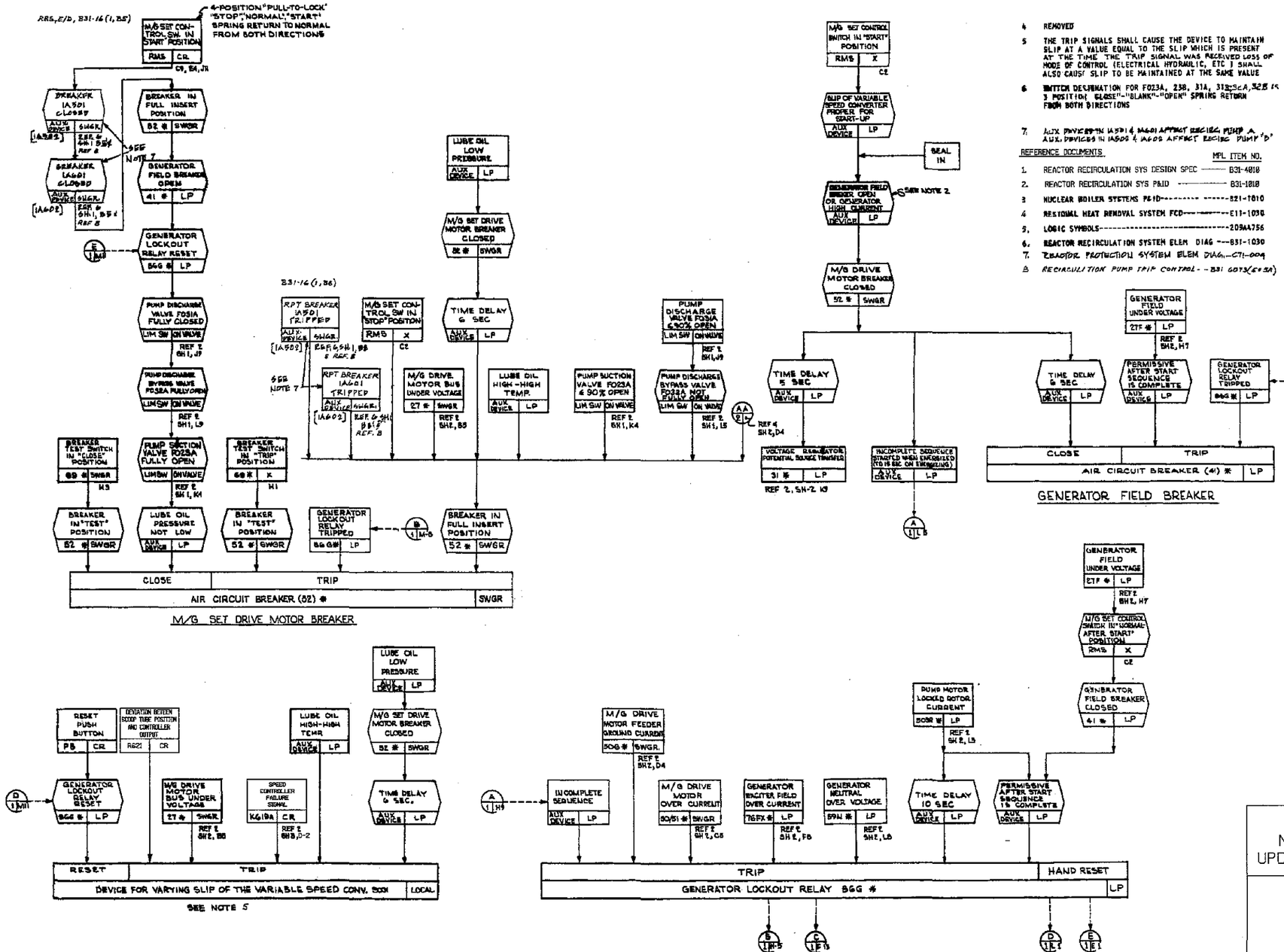

LEGEND.

SWGR = M/G SET DRIVE MOTOR HIGH VOLTAGE SWITCHGEAR
= SWITCHGEAR DEVICE FUNCTION NUMBER ANSI SPEC C37 2
= RECIRC. PUMP TRIP HIGH VOLTAGE SWITCHGEAR.

NOTES

1. AUXILIARY RELAYS, SWITCHES ETC ARE NOT SHOWN EXCEPT WHERE NECESSARY TO CLARIFY THE FUNCTION
2. THIS DEVICE SENSES WHEN THE PUMP HAS STARTED AND FUNCTIONS AFTER 2 SEC TIME DELAY TO OPEN THE "SEAL-IN", TRANSFER VOLTAGE SUPPLY TO THE VOLTAGE REGULATOR AND INHIBIT THE INCOMPLETE SEQUENCE.
3.
4. REMOVED
5. THE TRIP SIGNALS SHALL CAUSE THE DEVICE TO MAINTAIN SLIP AT A VALUE EQUAL TO THE SLIP WHICH IS PRESENT AT THE TIME THE TRIP SIGNAL WAS RECEIVED LOSS OF MODE OF CONTROL (ELECTRICAL HYDRAULIC, ETC.) SHALL ALSO CAUSE SLIP TO BE MAINTAINED AT THE SAME VALUE
6. SWITCH DESIGNATION FOR F023A, 23B, 31A, 31B, 5A, 5B IS 3 POSITION "CLOSE"-"BLANK"-"OPEN" SPRING RETURN FROM BOTH DIRECTIONS B31-16 (3,5,10A,B)
7. AUX. DEVICES IN 1A501 & 1A601 AFFECT RECIRC. PUMP "A" AUX. DEVICES IN 1A502 & 1A602 AFFECT RECIRC. PUMP "B"

REFERENCE DOCUMENTS.

		MPL ITEM NO.
1.	REACTOR RECIRCULATION SYS DESIGN SPEC	B31-4010
2.	REACTOR RECIRCULATION SYS P&ID	B31-1010
3	NUCLEAR BOILER SYSTEMS P&ID	B21-1010
4	RESIDUAL HEAT REMOVAL SYSTEM FCD	E11-1030
5.	LOGIC SYMBOLS	209A4756
6.	REACTOR RECIRCULATION SYSTEM ELEM DIAG	B31-1030
7.	REACTOR PROTECTION SYSTEM ELEM DIAG.	CT1-009
8	RECIRCULATION PUMP TRIP CONTROL	B31 6073(6-5A)

DUANE ARNOLD ENERGY CENTER
NEXTERA ENERGY DUANE ARNOLD, LLC
UPDATED FINAL SAFETY ANALYSIS REPORT

FCD
REACTOR RECIRCULATION SYSTEM

FIGURE 7.3-15 SHEET 1

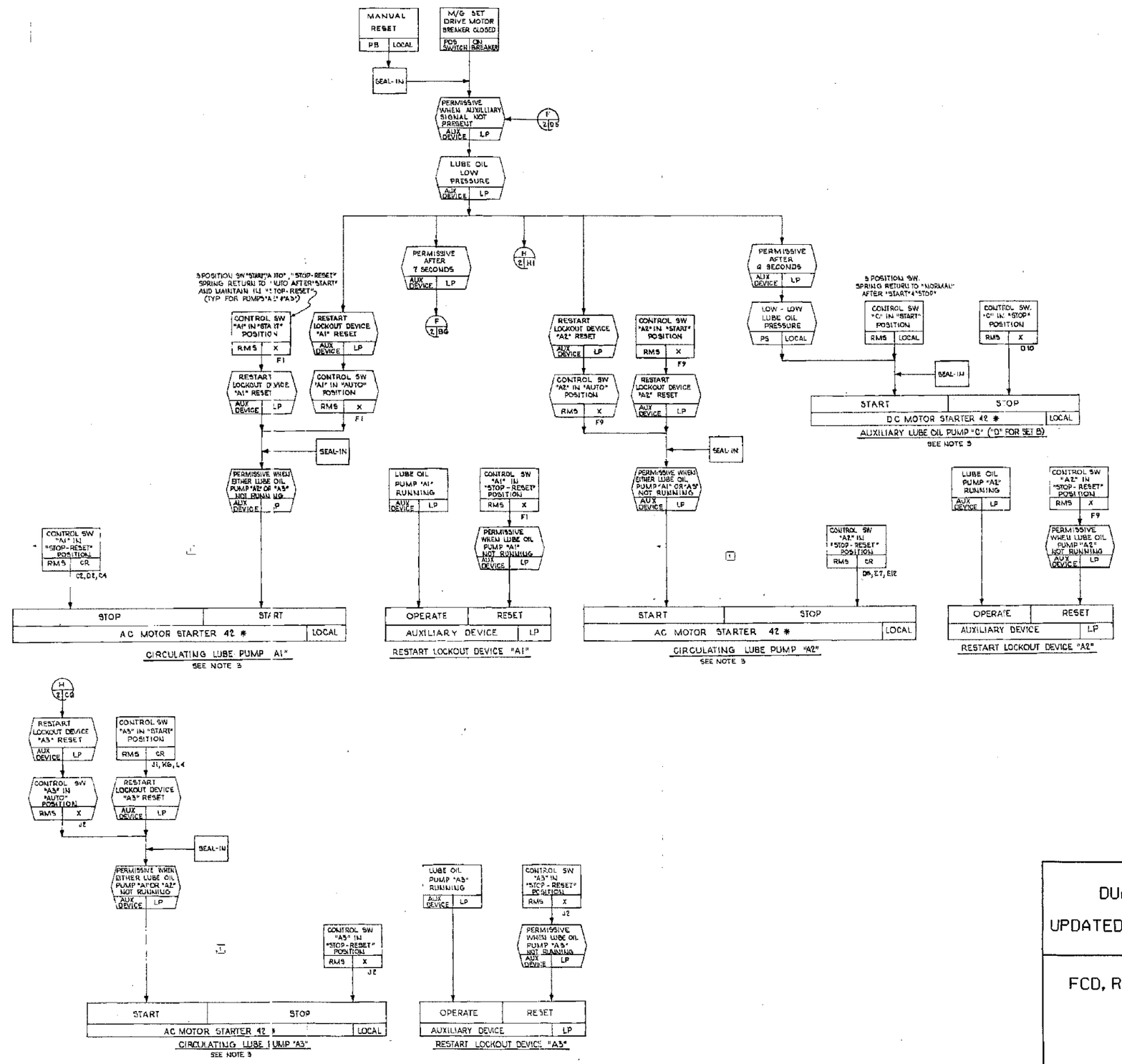

DUANE ARNOLD ENERGY CENTER
IES UTILITIES
UPDATED FINAL SAFETY ANALYSIS REPORT

FCD, REACTOR RECIRCULATION SYSTEM

FIGURE 7.3-15 SH. 2

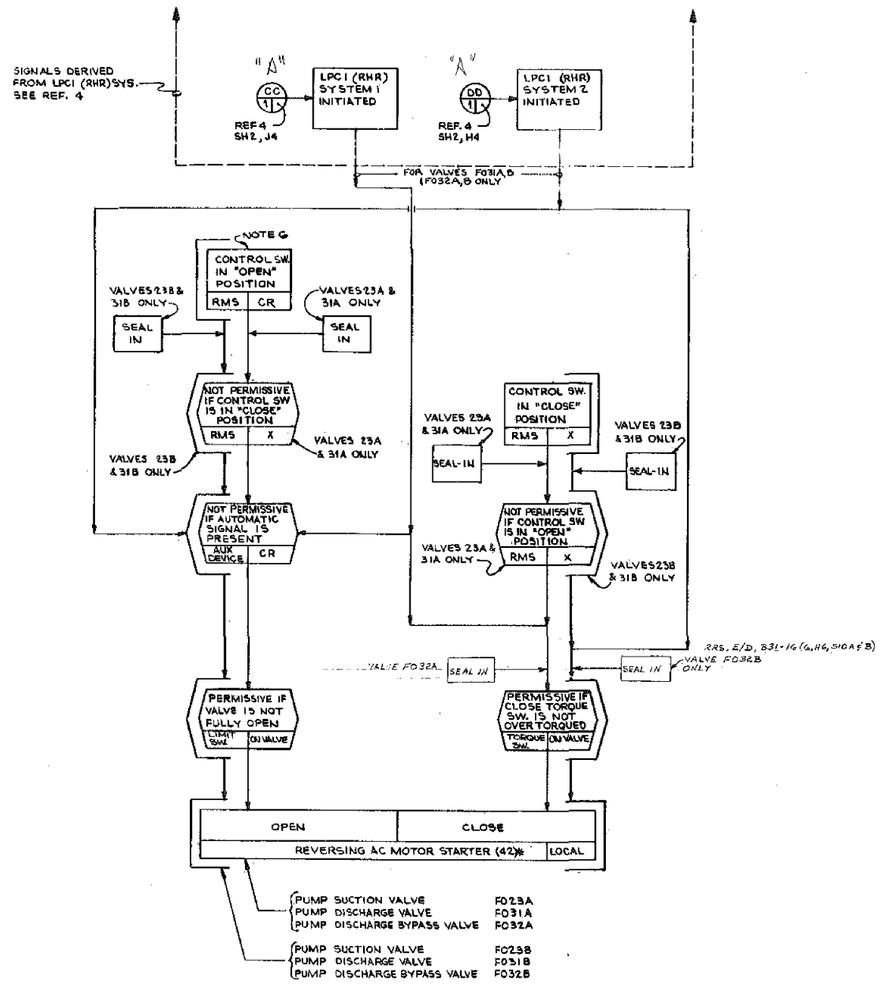

VALVES ARE SHOWN FOR BOTH RECIRCULATION LOOPS-REF. 2, SH. 1
(FUNCTION IS TYPICAL FOR EACH VALVE AS INDICATED)

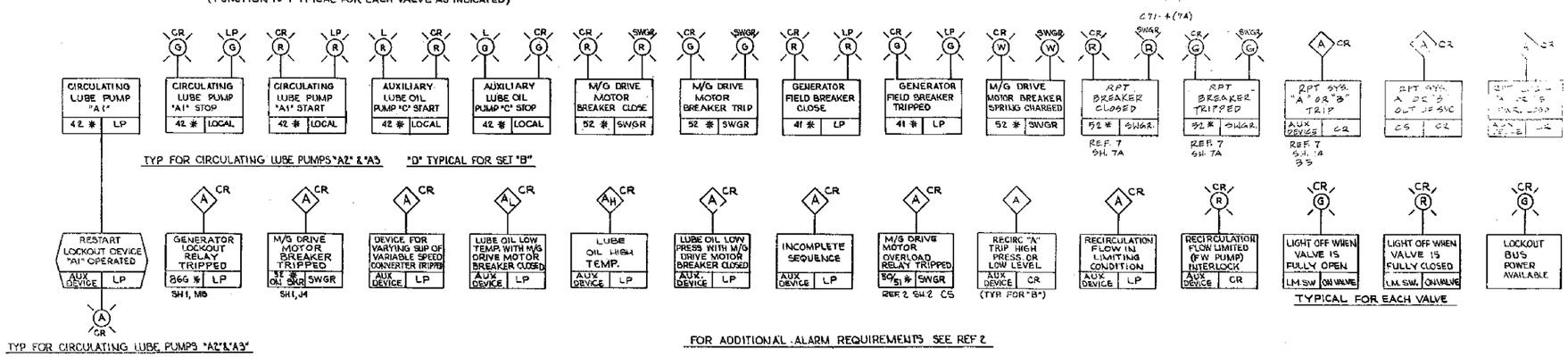

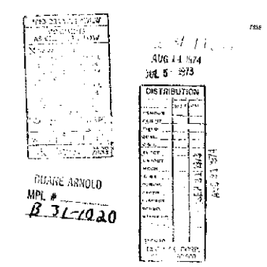

DUANE ARNOLD ENERGY CENTER
IOWA ELECTRIC LIGHT & POWER COMPANY
UPDATED FINAL SAFETY ANALYSIS REPORT

FCD, Reactor Recirculation System

Figure 7.3-15, Sheet 3

DUANE ARNOLD ENERGY CENTER
IOWA ELECTRIC LIGHT & POWER COMPANY
UPDATED FINAL SAFETY ANALYSIS REPORT

Main Steam Line High Flow Channels

Figure 7.3-16

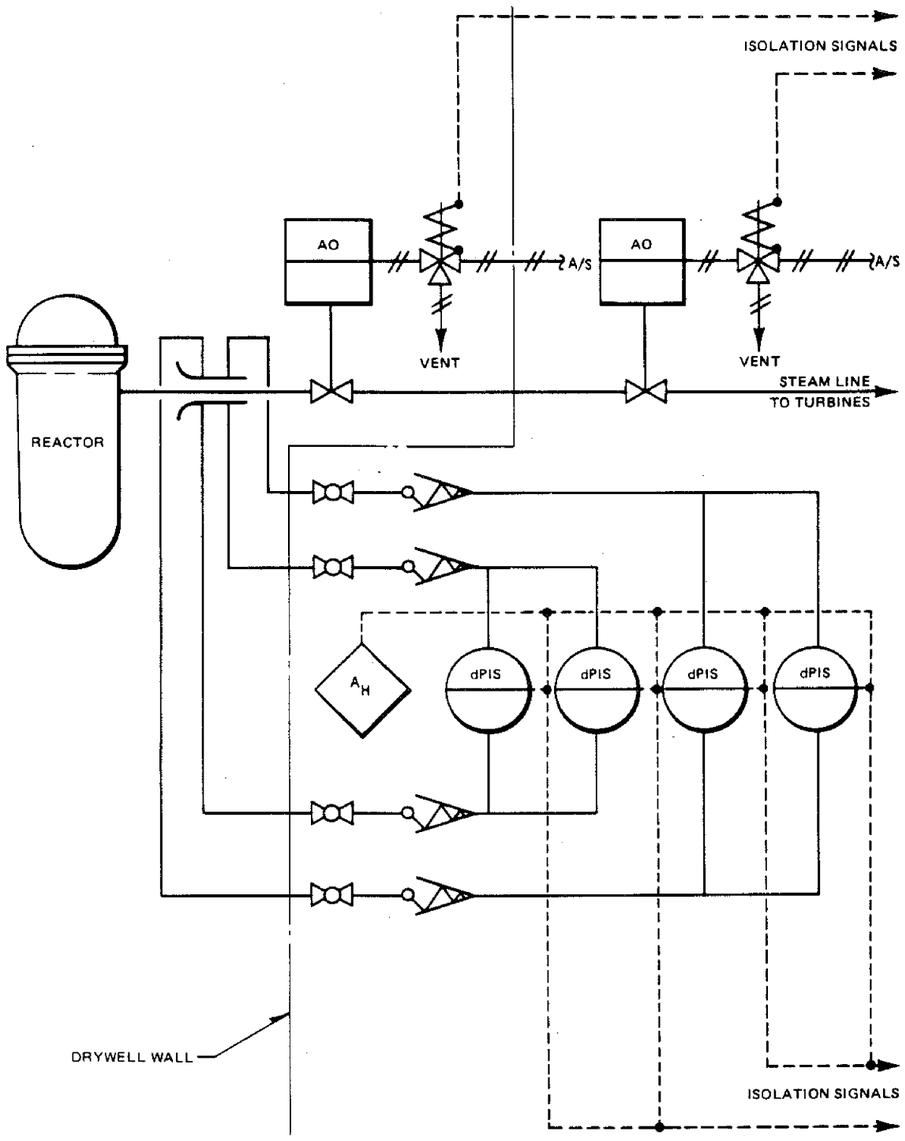

DUANE ARNOLD ENERGY CENTER
IOWA ELECTRIC LIGHT & POWER COMPANY
UPDATED FINAL SAFETY ANALYSIS REPORT

Typical Arrangement for Main Steam Line Break Detection by Flow Measurement

Figure 7.3-17

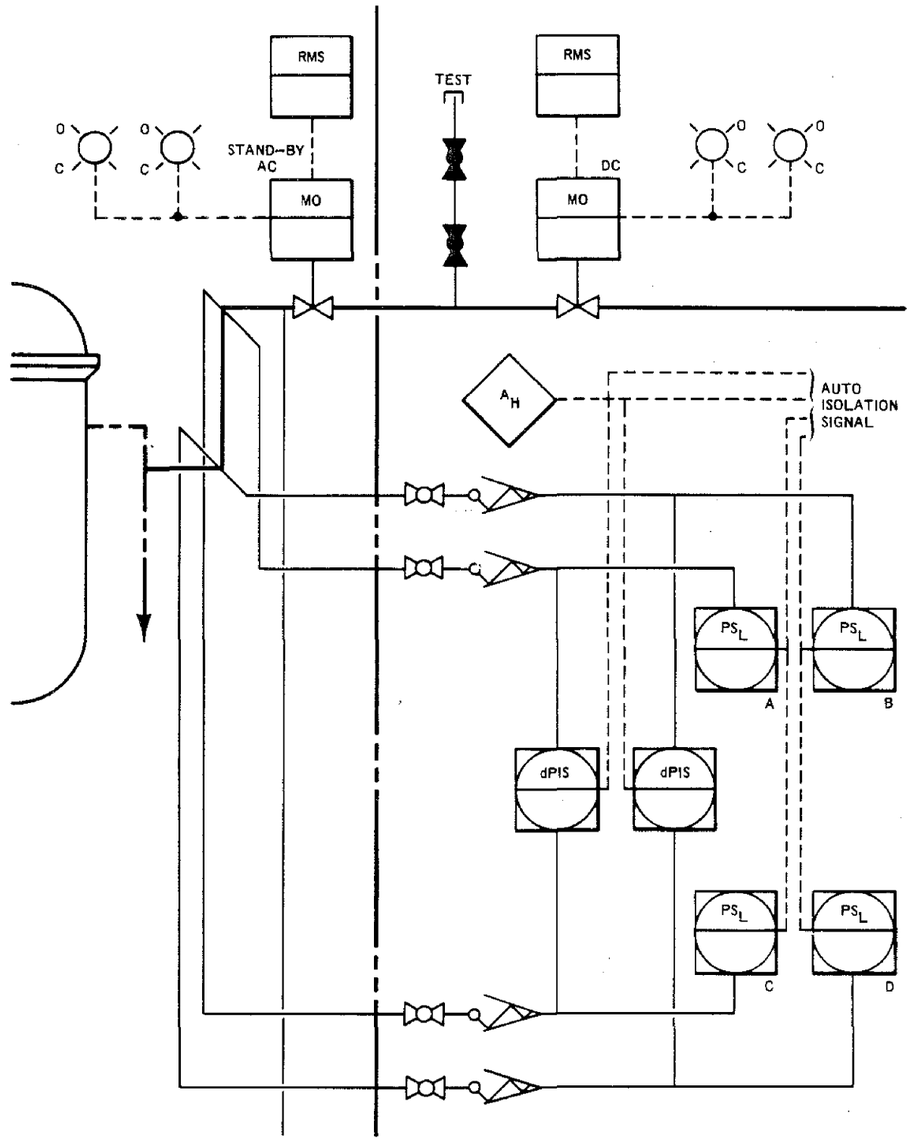

DUANE ARNOLD ENERGY CENTER
IOWA ELECTRIC LIGHT & POWER COMPANY
UPDATED FINAL SAFETY ANALYSIS REPORT

Typical Elbow Flow Sensing Arrangement

Figure 7.3-18

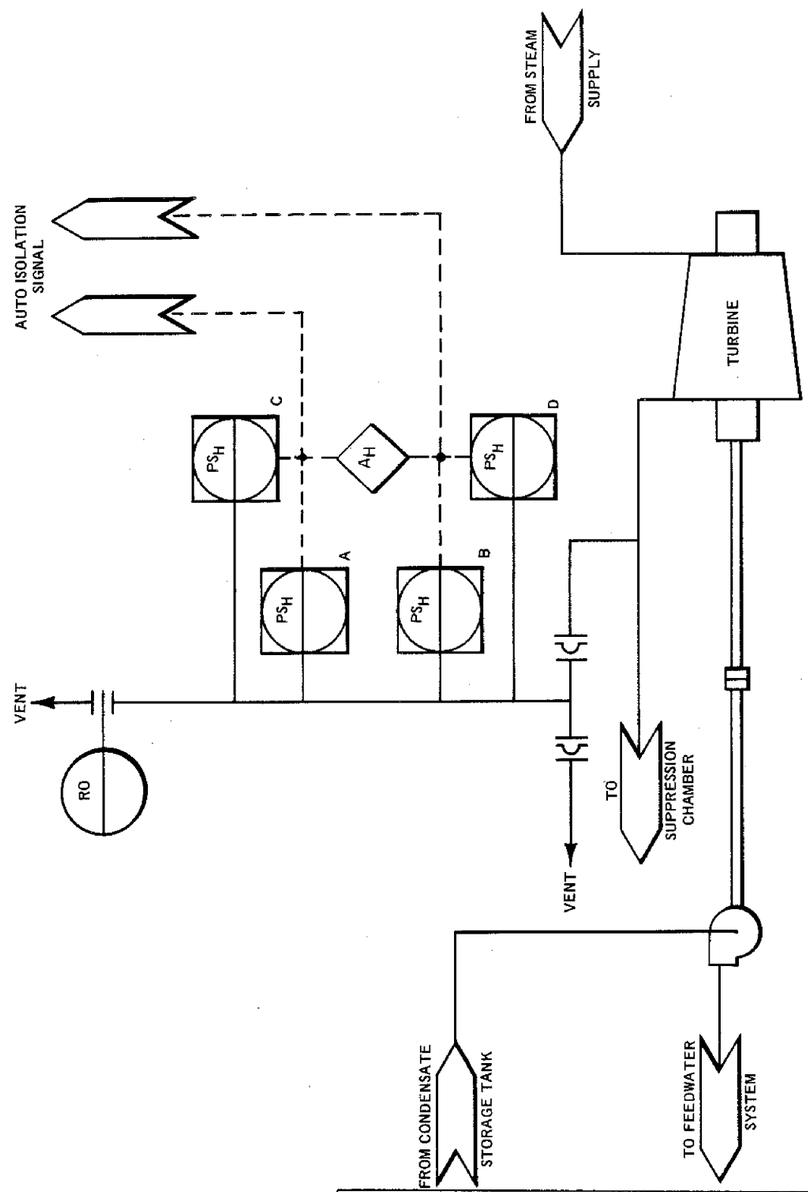

DUANE ARNOLD ENERGY CENTER
IOWA ELECTRIC LIGHT & POWER COMPANY
UPDATED FINAL SAFETY ANALYSIS REPORT

Typical HPCI or RCIC High Exhaust Pressure Detection Arrangement

Figure 7.3-19

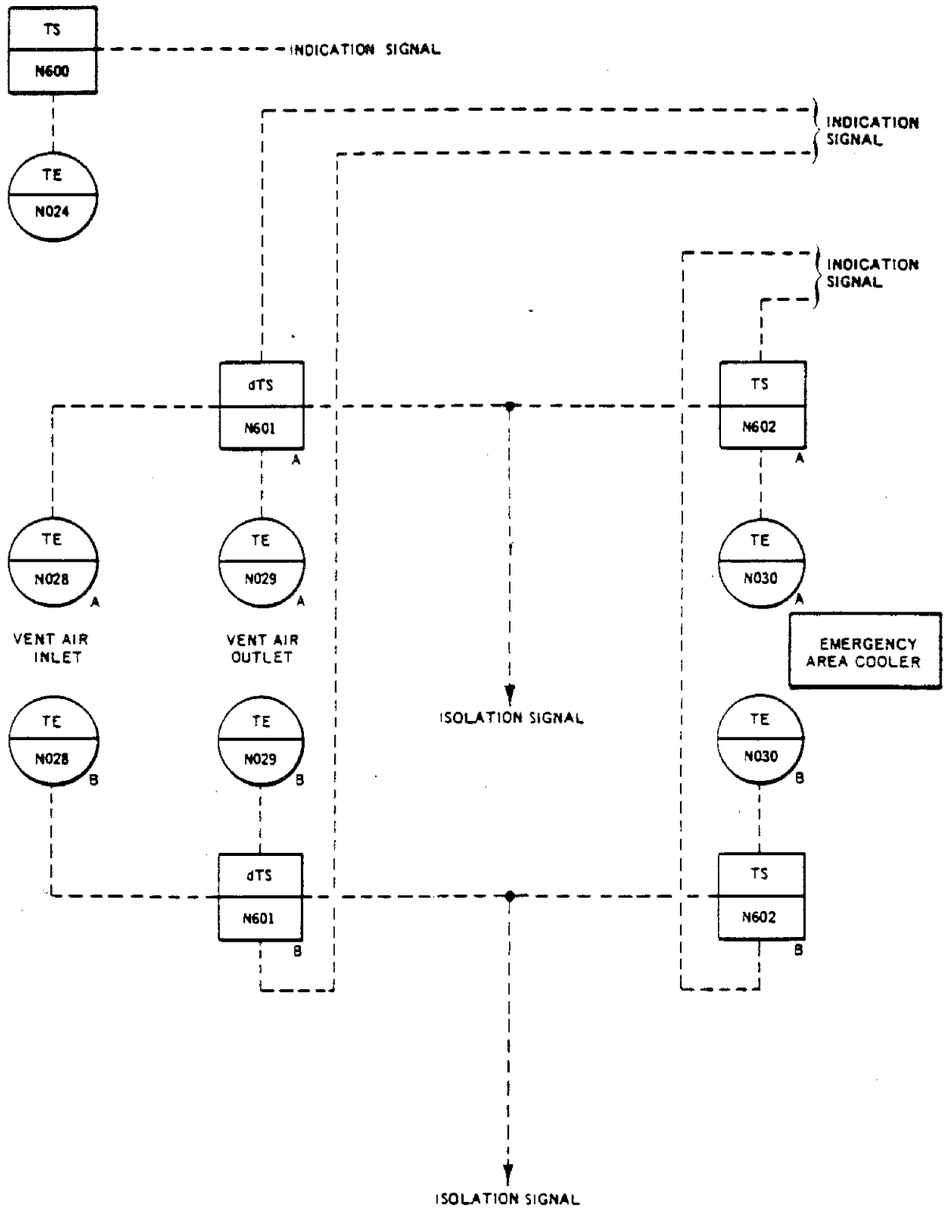

DUANE ARNOLD ENERGY CENTER

IES UTILITIES, INC.

UPDATED FINAL SAFETY ANALYSIS REPORT

HPCI or RCIC Room Temperature Detector Arrangement

Figure 7.3-20

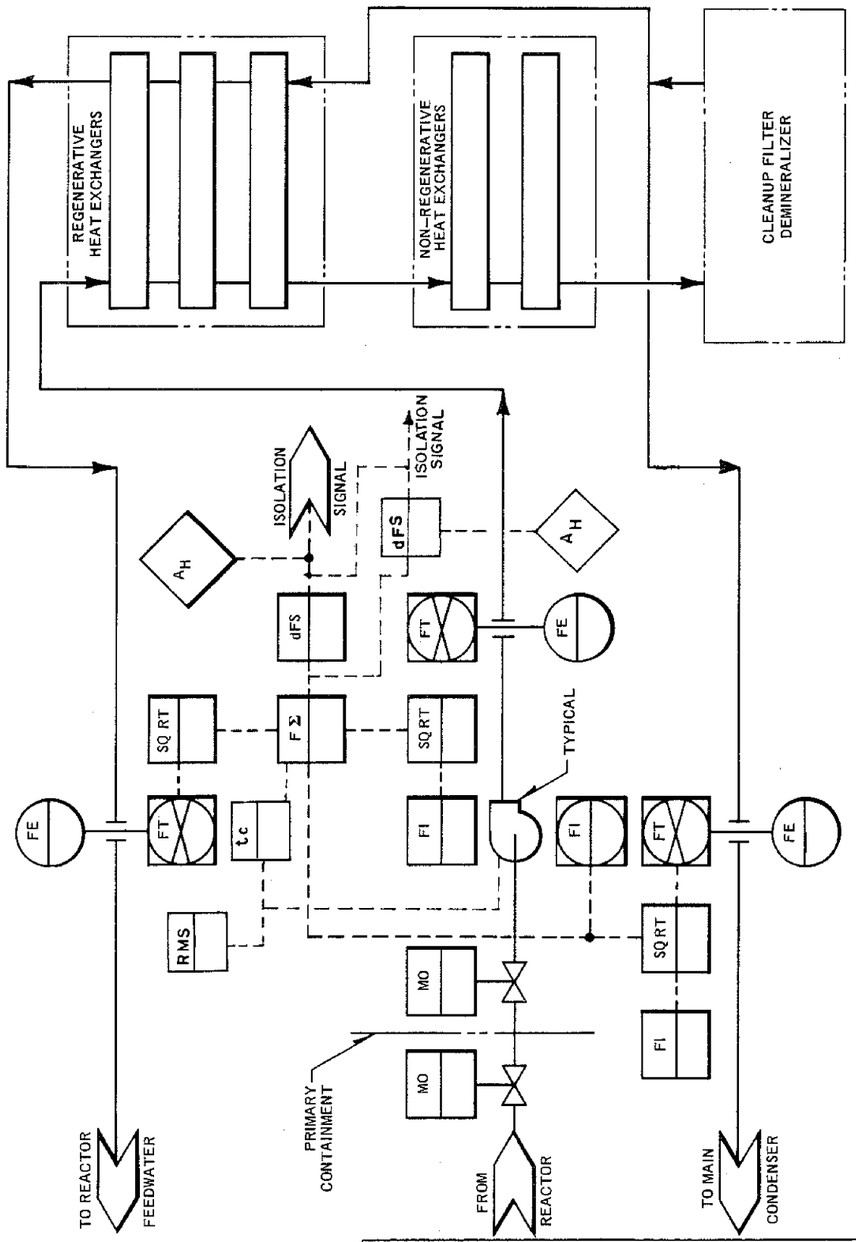

DUANE ARNOLD ENERGY CENTER
IOWA ELECTRIC LIGHT & POWER COMPANY
UPDATED FINAL SAFETY ANALYSIS REPORT

Reactor Water Cleanup Break Detection by Differential Flow Measurement

Figure 7.3-21

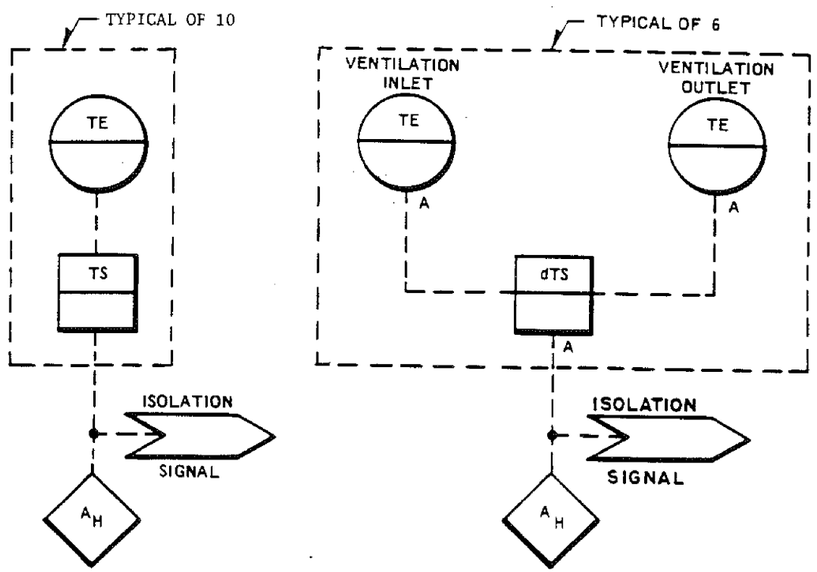

DUANE ARNOLD ENERGY CENTER

IOWA ELECTRIC LIGHT AND POWER COMPANY

UPDATED FINAL SAFETY ANALYSIS REPORT

Reactor Water Cleanup Break Detection by High Ambient and High Differential Temperature Measurement

Figure 7.3-22

7.4 SYSTEMS REQUIRED FOR SAFE SHUTDOWN

7.4.1 DESCRIPTION

The following functions required for safe shutdown of the DAEC are performed by the systems listed:

Hot Shutdown

1. Reactor trip capability - reactor scram system.

2. Reactor coolant makeup

   a. RCIC system.
   b. HPCI system.

3. Reactor pressure control - two safety relief valves (automatic and manual operation).

4. Decay heat removal and suppression pool cooling

   a. RHR system.
   b. RHR service water system.

5. Process monitoring

   a. Reactor vessel level and pressure.
   b. Suppression pool temperature.

6. Support - onsite electric power source and distribution system.

Cold Shutdown

The same as for hot shutdown with the addition of the RHR system in the shutdown cooling mode.

7.4.1.1 Reactor Trip System

The reactor trip system is described in Section 7.2.

7.4.1.2 Reactor Core Isolation Cooling System

The RCIC system is described in Section 5.4.6.

All components necessary for initiating operation of the RCIC system are completely independent of auxiliary ac power, plant service air, and external cooling water systems,

requiring only dc power from the station battery to operate the valves and to operate the RCIC turbine control governor. The power source for the turbine-pump unit is the steam generated in the reactor vessel by the decay heat in the core. The steam is piped directly to the turbine and the turbine exhaust is piped to the suppression pool.

The RCIC system turbine-pump unit is located in a shielded area to assure that personnel access areas are not restricted during RCIC system operation. The turbine controls (see Figure 5.4-11) provide for automatic shutdown of the RCIC system turbine upon receipt of the following signals:

1. Reactor vessel high water level - indicating that core cooling requirements are satisfied.

2. Turbine overspeed - to prevent damage to the turbine and turbine casing.

3. Pump low suction pressure to prevent damage to the turbine-pump unit due to loss of cooling water.

4. Turbine high exhaust pressure - indicating turbine or turbine control malfunction.

5. Automatic isolation signal - indicating RCIC steamline rupture.

Since the steam supply line to the RCIC system turbine is a primary containment boundary, certain signals automatically isolate this line causing shutdown of the RCIC system turbine. Automatic shutdown of the steam supply (see Figure 5.4-9) is described in this chapter.

The RCIC system turbine has two devices for controlling power: a speed governor which limits turbine speed to its maximum operating level and a control governor with automatic speed set point control which is positioned by a demand signal from a flow controller to maintain constant flow over the pressure range of RCIC operation. The RCIC system turbine control valve is positioned by the control device which requires the lower turbine speed.

The RCIC turbine exhaust high pressure trip is set at 50 psig (nominal). This pressure level permits operation of the RCIC during hypothetical small-break loss-of-coolant accidents when high pressures could exist in the primary containment.

The turbine-pump suction is normally lined up to the condensate storage tank. The backup supply of cooling water is the suppression pool. Provisions have been incorporated into the RCIC system logic to provide for automatic water supply transfer (switchover). The sensors used for the switchover are the safety-grade condensate storage tank low-water-level elements. These sensors and their associated circuitry meet the criteria of IEEE Standard 279-1971, Sections 4.9 and 4.10. The logic of the switchover is such that the condensate storage suction valve is not closed until the suppression pool suction valves are fully open.

The RCIC system is also equipped with an automatic reset switch. The system will restart automatically on a reactor vessel low water level signal after it has been terminated by a reactor vessel high water level signal. The automatic reset of the RCIC system as well as the automatic RCIC suction switchover (from condensate storage tank to suppression pool) are in compliance with NUREG-0737, Items II.K.3.13 and II.K.3.22 requirements.

Evaluation of the reliability of the instrumentation for the RCIC system shows that no failure of an initiating sensor either prevents or falsely starts the system.

7.4.1.3 High-Pressure Coolant Injection System

The HPCI system is described in Section 7.3.1 and 6.3.2.

7.4.1.4 Safety Relief Valves

The safety relief valves are described in Sections 5.2.2, 5.4.13 and 7.3.1.1.1.

7.4.1.5 Residual Heat Removal System

The RHR system is described in Section 5.4.7.

7.4.2 PLANT SHUTDOWN FROM OUTSIDE THE CONTROL ROOM

7.4.2.1 Description

7.4.2.1.1 General

The capability exists for plant shutdown from outside the main control room in the event that the control room becomes uninhabitable. If the control room becomes uninhabitable due to fire, the central and local remote shutdown panels of the alternate shutdown capability system
2013-013 (ASCS) are utilized to achieve and maintain Safe and Stable conditions. The alternate shutdown capability system consists of one central remote and four local remote shutdown panels. The five remote shutdown panels (RSP) contain isolation, transfer, and control switches for existing equipment required for safe shutdown of the plant. Alternative ventilation is also provided for the Division II switchgear room in the event that the control building HVAC system which also cools the Division II switchgear room is lost or must be shutdown due to the control room fire. An alternative procedure for plant shutdown is available in the event the control room must be abandoned for some reason other than fire. However, a control room habitability study has indicated that a control room fire is the only event postulated to cause abandonment of the control room.

Communications between the central and local remote shutdown panels are provided by the plant paging system and a sound-powered communications system. The sound-powered communications system connects the five remote shutdown panels together and can be connected to the plant sound-powered communications system by a jumper located near the central remote shutdown panel.

[redacted] At all times when not in use or being maintained, all remote shutdown panels shall be locked. They shall be visually checked [redacted]

2013-013 The alternate shutdown capability system was designed and installed to meet the requirements of 10 CFR 50, Appendix R, Section III.G. The DAEC submitted the alternate
2013-013 shutdown capability system design to the NRC by Reference 1. Transition to NFPA 805 evaluated and credited use of the Remote Shutdown Panel System relying on the Appendix R design. Reference 3.

7.4.2.1.2 Hot Standby

In the event that temporary evacuation of the control room is required due to fire, the operators can establish and maintain the reactor in a hot standby condition from outside the control room by using controls located at the central and local remote shutdown panels. Other controls at appropriate switchgear and motor control centers are also available if needed for backup. These controls may be used as needed for various functions after reactor trip.

The reactor must be in a tripped condition to initiate hot standby. Procedurally, this will be accomplished by initiating manual reactor scram prior to evacuating the control room. Scram capability also exists outside the control room through manual tripping of the power range monitor power supplies.

7.4.2.1.3 Cold Shutdown

After hot standby conditions have been achieved, the plant can be brought to cold shutdown from outside the control room by using instrumentation and controls on the central remote shutdown panel in conjunction with local control stations and local manual actions. All of the cold shutdown systems are operated under administrative control from the central remote shutdown panel and are coordinated in sequence to achieve and maintain cold shutdown during the shutdown time period.

Control room fire damage could cause control fuses to blow prior to transfer of control to the Alternate Shutdown Capability System. Backup fuses, provided in response to IE

Information Notice 85-09, are installed in the control room circuits that have fuses for equipment required to achieve and maintain cold shutdown from outside of the control room. The backup fuses will be manually transferred into their respective control circuits by operator actions [redacted] Backup fuses for [redacted] The remaining backup fuses are located in six remote shutdown fuse panels. (See Table 7.4-5 for panel locations.)

7.4.2.2 Analysis

7.4.2.2.1 NRC General Design Criterion 19

In accordance with NRC General Design Criterion (GDC) 19, the capability of establishing a hot standby condition and maintaining the reactor in a safe status in that mode is considered an essential function. The controls and indications necessary for this function are identified in Tables 7.4-2, 7.4-3, and 7.4-4. To ensure availability of the central and local remote shutdown panels after abandonment of the control room, the following design features have been utilized:

1. The central remote shutdown panel, including all safety-related instrumentation mounted on it, is designed to withstand the safe shutdown earthquake with no less of safety-related functions. The local remote shutdown panels are also designed to withstand the safe shutdown earthquake with no loss of safety functions.

2. Independence of the controls outside the control room from those inside the control room is provided by the use of transfer switches on the remote shutdown panels. The associated instrumentation indicators are independent as they are wired through transfer switches and can be isolated from control room instrumentation.

In addition to establishing and maintaining hot standby, GDC 19 requires the capability to achieve and maintain cold shutdown of the reactor through use of suitable procedures. Controls and indicators provided on the central and local remote shutdown panels are used in accordance with DAEC procedures to achieve and maintain cold shutdown.

7.4.2.2.2 IEEE-279-1971

The single-failure criterion is only applicable to remote shutdown events other than fire that cause the control room to be abandoned.[2] Since transfer switches and wiring in the remote shutdown panels interface with and are parts of divisional safety-related circuitry, precautions have been taken to maintain divisional separation in the remote shutdown panels.

The design of the alternate shutdown capability system does not alter the function or method of operation of any safe shutdown system; it only adds control stations outside the control room from which operation of one division of safe shutdown equipment is possible. The transfer switches on the remote shutdown panels isolate certain safe shutdown systems from

main control room circuitry and transfer control to the alternate shutdown capability system. Power supplies and trip circuitry [redacted] have been selected to be compatible with the existing plant equipment and to provide a level of accuracy and response similar to those bypassed components in the control room. Indicator legends and ranges have been selected to be consistent with existing control room instrumentation. Instruments [redacted] which are not Class 1E, are isolated from Class 1E circuitry by Class 1E transfer switches during normal plant operation and are only used in case of alternative shutdown. The instrumentation located in the alternate shutdown capability system is shown on plant layout drawings, piping and instrumentation diagrams, and schematic drawings.

Physical separation of redundant channels, division of safety-related control instrumentation, protective circuits, devices, or components, and physical separation of safety-related and non-safety-related channels or divisions in any one section is provided within each remote shutdown panel such that not credible single event can prevent proper functioning of the protection system.

Safety-related Class 1E cables within remote shutdown panels are separated from cables of redundant divisions and nondivisional cables. Barriers are provided where separation between different groups of devices and wiring is 6 in. or less.

During normal plant operation, the isolation and transfer switches are set in the “Normal” position. In this position, the plant is controlled from the control room. Control from remote shutdown panels is not possible unless the isolation and transfer switches are set to the “Emergency” position. No control from the control room is possible with isolation and transfer switches set in the “Emergency” position because connections from the control room are opened by the switch. Therefore, no short circuit, open circuit, or fault to ground of control room cabling due to fire will affect local control once the switch is in the “Emergency” position.

REFERENCES FOR SECTION 7.4

1. Letter from L. D. Root, Iowa Electric, to H. Denton, NRC, Subject: Fire Protection and Alternate Safe Shutdown Capability, dated June 22, 1982.

2. U.S. Nuclear Regulatory Commission, "Branch Technical Position CMEB 9.5-1, "Standard Review Plan for the Review of Safety Analysis Reports for Nuclear Power Plants, NUREG-0800, July 1981.

2013-013 3. Safety Evaluation by the Office of Nuclear Reactor Regulation Transition to a Risk-Informed, Performance-Based Fire Protection Program In Accordance With 10 CFR 50.48(c) Amendment No. 286 to Renewed Facility Operating License No. DPR-49 Nextera Energy Duane Arnold, LLC Duane Arnold Energy Center Docket No. 50-331, 9/10/2013, (ML13210A449).

Table 7.4-1

LOCATIONS OF REMOTE SHUTDOWN PANELS

[redacted]	[redacted]	[redacted]
[redacted]	[redacted]	[redacted]
[redacted]	[redacted]	[redacted]
[redacted]	[redacted]	[redacted]
[redacted]	[redacted]	[redacted]
[redacted]	[redacted]	[redacted]

Table 7.4-2

SAFETY-RELATED CONTROLS, ALTERNATE SHUTDOWN CAPABILITY PANELS

[redacted]

2015-014

Table 7.4-2

SAFETY-RELATED CONTROLS, ALTERNATE SHUTDOWN CAPABILITY PANELS

[redacted]

Table 7.4-3

NON-SAFETY-RELATED CONTROLS AND MONITORING INDICATORS,
ALTERNATE SHUTDOWN CAPABILITY PANELS

[redacted]

[a] These controls have associated indicating lights.

Table 7.4-3

NON-SAFETY-RELATED CONTROLS AND MONITORING INDICATORS,
ALTERNATE SHUTDOWN CAPABILITY PANELS

[redacted]

[a] These controls have associated indicating lights.

Table 7.4-3

NON-SAFETY-RELATED CONTROLS AND MONITORING INDICATORS,
ALTERNATE SHUTDOWN CAPABILITY PANELS

[redacted]

[a] These controls have associated indicating lights.

Table 7.4-3

NON-SAFETY-RELATED CONTROLS AND MONITORING INDICATORS,
ALTERNATE SHUTDOWN CAPABILITY PANELS

[redacted]

2015-014 [redacted]

[a] These controls have associated indicating lights.

Table 7.4-3

NON-SAFETY-RELATED CONTROLS AND MONITORING INDICATORS,
ALTERNATE SHUTDOWN CAPABILITY PANELS

[redacted]

[redacted]

[a] These controls have associated indicating lights.

Table 7.4-4

OTHER CONTROLS AND MONITORING INDICATORS PROVIDED OUTSIDE THE MAIN CONTROL ROOM

[redacted]

Table 7.4-5

LOCATIONS OF REMOTE SHUTDOWN FUSE PANELS (RSFP)

[redacted]

Table 7.4-6

REACTOR CORE ISOLATION COOLING SYSTEM TRIP SETTINGS

RCIC FUNCTION	NOMINAL SETTING
Reactor Vessel High Water Level	+ 211 in. indicated level [a]
Reactor Vessel Low Water Level [b]	+ 119.5 in. indicated level [a]
Condensate Storage Tank Low Level	12 in. above tank bottom
RCIC Steam Line Flow-High	155 Inches H_20
RCIC Steam Supply Line Pressure-Low	75 psig
RCIC Turbine Exhaust Diaphragm Pressure-High	50 psig
RCIC Equipment Room Temperature-High	175°F
RCIC Room Ventilation Differential Temperature-High	Δ 50°F
RCIC Leak Detection Time Delay	30 minutes
RCIC Suppression Pool Area Ambient Temperature-High	150°F
RCIC Suppression Pool Area Ventilation Differential Temperature-High	Δ 50°F

[a] Zero referenced to top of active fuel (344.5 in. above vessel zero).
[b] Approximate setting

7.5 SAFETY-RELATED DISPLAY INSTRUMENTATION

7.5.1 REACTOR, REACTOR COOLANT, AND CONTAINMENT READOUTS AND INDICATIONS

The instrument readouts and indicators provided to the operators for monitoring conditions in the reactor, the reactor coolant system, and the containment for all operating conditions of the plant (including accident conditions) are discussed and listed in this chapter and Chapter 6. Process and effluent radiation monitoring systems are described in Chapter 11, and systems for area radiation monitoring and airborne radioactivity monitoring are described in Chapter 12.

Instrumentation which is required for post-accident monitoring of reactor and plant conditions has been evaluated with respect to adherence to Regulatory Guide 1.97 (Reference 3). The results of that evaluation are given in references 6, 7 and 8.

7.5.1.1 Design Criteria

The design criteria for the selection of reactor vessel and reactor coolant system instrumentation readouts or indications for systems not required for safety are discussed with the description of each system under the section, "Power-Generation Design Bases," and the system description sections that follow (example: Section 7.7.1, "Feedwater System Control and Instrumentation;" Section 7.7.1.2, "Power Generation Design Basis;" and Section 7.7.1.3, "System Description").

The criteria for the selection of the similar devices of the safety-related control systems are discussed under the section "Safety Design Bases" (example: "Design Bases for Emergency Core Cooling System Instrumentation and Control," Section 7.3.1.2.2).

The design criteria for the selection of the readouts or indications required for the primary containment are discussed in Section 6.2.

The number of channels of readouts and/or indications; their range, accuracy, and location; and the evaluation of their design adequacy for significant information required by the operator are discussed for each system in Chapters 6 and 7.

The analysis of abnormal operational transients and postulated accidents presented in Chapter 15 shows that the instruments described above provide appropriate wide-range information for conditions within the primary containment.

7.5.1.2 Loss-of-Coolant Accident (LOCA) Information

The following process instrumentation provides information to the operator for his use in monitoring conditions within the reactor vessel and the primary containment. Limiting conditions for operation and surveillance requirements are given in the Technical Specifications.

1. Reactor Water Level

Vessel water level instrumentation described below will be operable during and after a LOCA.

a. Three level indicators located in the control room operating from separate differential-pressure transmitter systems having pressure compensation and condensing chamber-type reference legs. These two systems are selectively connected to a control room recorder. This readout covers a range from 158 to 218 in. above the top of the active fuel (total range 60 in. with an accuracy of ±2% of the range).

2015-014

b. Two redundant level indicators, displaying vessel level from separate differential pressure transmitters (LT4539 and LT4540) that are connected to temperature-compensating reference columns inside the drywell. This readout covers a range from 8 to 218 in. above the top of active fuel (total range 210 in. with instrument accuracy of ± 3% of the range).

2014-005

c. Two redundant level indicators, displaying level inside the shroud from two transmitters (LT-4565B and LT-4565C). Two recorders in the control room record data from the four transmitters which measure level inside the shroud. The range of these instruments is from 153 inches below the top of active fuel to 218 inches above. Two microprocessor based compensation modules (LY4565A/C and LY456B/D) pressure compensate the four inside shroud level loops (4565A-D). This pressure compensation utilizes reactor pressure signals from two pressure transmitters (PT4599A and PT4599B), one for each divisional compensation module. This pressure compensation corrects for the inaccuracy caused by the difference in the variable leg density from the cold calibrated condition to normal operating and accident pressures and all points in between. The compensated signals are displayed on the two level indicators (LI4565C and LI4565B), two level recorders (LR456A and LR4565B) and Plant Process Computer (PPC). Loss of the reactor pressure signals (PT4599A and

PT4599B) generates an error signal lighting an amber indicating light between the respective indicators and recorders informing Operations personnel to perform the pressure compensation manually. These channels provide post-accident vessel level indication and continuously monitor vessel level in the cold shutdown condition.

d. Indication is provided for the channel which measures level above the reactor vessel flange. This channel is not density compensated, thus cannot provide an accurate measurement of level above ambient conditions. It does however, provide an indication of relative water level changes.

A full discussion of the ten separate reactor vessel level indicators that are provided in the reactor control room can be found in Section 7.6.4 and are shown in Figure 7.6-30.

2. Reactor Pressure

Reactor pressure is recorded in the control room by two recorders operating from separate pressure transmitters located outside the primary containment. Ranges of the two recorders are 0 to 1200 psig and 800 to 1100 psig, respectively, with an accuracy of ±1/2% of the range. In addition, there are two local 0 to 1500-psig gauges. Two separate channels with a range of 0-1500 psig, are recorded and indicated in the Control Room. Two separate channels with a range of 0-250 psig are also indicated in the Control Room, with an accuracy of ± 8.7%. Three channels of reactor pressure measurement with range 0 to 1200 psig are provided. Three pressure indicators are provided in the control room, one for each channel. One recorder, which may be manually switched between two of the channels is provided. The third channel cannot be connected to the recorder.

3. Primary Containment Pressure

Six channels provide drywell pressure indication and recording in the control room. Two channels have a range of -5 to +5 psig, two have a range of -10 to +90 psig, and two have a range of 0 to 250 psig. Two additional channels provide drywell pressure indication with a range of 0 to 100 psig.

All of the indicators are redundant class 1E instruments that meet seismic category 1 criteria, and meet the safety-grade criteria in effect at the time of their installation.

The range of 0 to 250 psig meets the NUREG-0737, Item II.F.1.4 requirement of 4 times design pressure (56 psig). The instrumentation meets design provisions of Regulatory Guide 1.97, including qualification, redundancy, and testability. Information on the accuracy of these channels is given in Section 6.2.5.5.1.

Two local indicators with range 0-100 psig are provided, one for drywell pressure, and one for torus pressure. Two separate channels provide Control Room indication of torus pressure with a range of 0-100 psig.

4. Primary Containment Temperature

Primary containment temperature is monitored in the control room on redundant recorders operating from resistance temperature detectors in the drywell and above the normal level in the suppression chamber. The range is 0 to 350°F in the drywell and 0 to 300°F in the torus. The accuracy is ±1% of the range. Eight detectors are located in the drywell and four detectors are located in the suppression pool. Average drywell air temperature is also indicated.

5. Primary Containment Environment

a. A postaccident sampling system has been installed to obtain representative liquid and gas samples from within the primary containment for radiological and chemical analyses in association with a postulated LOCA. See Section 12.3.4.

b. Oxygen analysis of the containment atmosphere can be performed by an oxygen analyzer system that is indicated in the control room. See Section 6.2.5.5. Note: a separate oxygen analyzer is installed on the 'B' Primary Containment Radiation Monitoring Panel to verify the atmospheric conditions of the drywell and torus remain inerted per Technical Specifications with the H_2O_2 Analyzer panels in standby.

c. Hydrogen instrumentation provides indication in the control room. The range is 0% to 20% H_2 by volume under both positive and negative ambient pressure. See Section 6.2.5.5.

d. High-range containment radiation monitors have been installed in response to NUREG-0737 (Section II.F.1.3). They consist of four (two in the torus and two in the drywell) physically separated monitors designed and qualified to function in an accident environment with a maximum range of 10^7 rad/hr. They provide continuous indication and a recorder is also provided in the Control Room. See Section 12.3.3.3.

6. Suppression Pool Water Temperature

Suppression pool temperature is measured directly by two temperature detectors that are inserted into the pool. The temperature is recorded on redundant recorders located in the control room. The average of the two temperatures is also indicated and recorded in the Control Room. The range is 20 to 220°F; the accuracy is ± 2% of the range.

7. Drywell and Suppression Pool Water Level

Primary containment water level instrumentation provides continuous indication in the control room. The two suppression pool water level channels have a range of 1.5 to 16 ft which covers a range from below the lowest ECCS pump suction line inlet to more than five feet above the normal water level. This range meets the requirements of NUREG-0737 and Regulatory Guide 1.97. The two containment channels have a range 0 to 98 ft where 0 is the bottom of the suppression pool and 23 feet 3 3/4 inches is the bottom of the drywell. Each channel has an indicator and a recorder in the Control Room.

These are redundant class 1E channels which are seismic category 1 and environmentally qualified. The 1.5 to 16 ft range is adequate to indicate the addition of the entire water volume of the primary coolant system to the suppression pool and allows for contribution from the condensate storage tank up to the maximum allowed before the HPCI suction transfers to the suppression pool. The accuracy is ± 6% of full scale. See Section 6.2.1.5.

There are also two torus narrow range water level channels with a range of -10 inches to +10 inches. These channels are recorded in the Control Room.

8. Drywell and Suppression Chamber Humidity

Humidity within the primary containment is indicated locally by an electrical system consisting of a moisture-sensitive detector, an electrical transmitter, and an electrical indicator. The range is 0% to 100% relative humidity; the accuracy is ± l% relative humidity.

All the instruments described in Section 7.5.1.2 except the containment Hydrogen and Oxygen monitors are operable during and after design-basis LOCAs that affect the drywell environment; their ranges cover design conditions of the containment. The list includes the instruments used to monitor the post-LOCA containment atmosphere. For further details regarding the instruments used for monitoring postaccident conditions, see the response to Safety Guide 7 in Section 1.8.

The containment Hydrogen and Oxygen monitors are functional during and after "beyond design-basis" or "severe" accidents that affect the drywell environment; their ranges cover design conditions of the containment.

7.5.1.3 Control Room Accident Monitoring Panel

The safety parameter display system (SPDS) described in Section 7.7.6 includes an accident monitoring panel in the control room. The SPDS is not a safety system. The SPDS accident monitoring panel duplicates information provided by other control room instrumentation which is safety related.

7.5.1.4 Direct Valve-Position Indication

In compliance with Item 2.1.3.a of NUREG-0578[4], the reactor system relief and safety/relief valves are provided with direct position indication in the control room. There are three sensing devices inside the drywell for each valve. The devices, which are environmentally qualified, use Class 1E penetrations. Setpoints are chosen to provide the operator with an unambiguous control room indication of valve position. Indication is provided on front and back panels in the Control Room. Front panel indication provides adjacent feedback to the operator at the SRV Control Panel.

Thermocouples are available as a backup method of determining valve position. The thermocouple power supply is separate from the direct position-indicating devices.

7.5.2 AUTOMATIC DEPRESSURIZATION SYSTEM (ADS) ANNUNCIATION

The ADS has a number of annunciators showing the status of the system including the following:

1. ADS timer initiated.
2. ADS relays energized.

Thus, the operator could determine from the above annunciators if the automatic depressurization system were actuated.

In the control room, five RPV level indicators and two drywell pressure recorders are available for determining the status of the reactor vessel level and containment pressure.

From the above, the operator can determine whether the automatic depressurization system was needed or falsely actuated. HPCI flow indication is also available. This would inform the operator if the high-pressure coolant injection was operating properly, in which case the automatic depressurization system is not needed.

7.5.3 AUTOMATIC ANNUNCIATION OF OPERATING BYPASSES

Automatic annunciation of operating bypasses are included in addition to that discussed in Section 1.8.22.

Annunciation is included for the RHR pump, core spray pump, and RHR service water pump circuit breakers, and the emergency service water pump and river water supply pump motor starters. An annunciation will be made in the control room any time these circuit breakers or motor starters are not in their operating position (racked out) or when the "pull to lock" feature on the corresponding control room control switch is used.

Automatic annunciation is actuated in the control room any time a locked access door to any alternate shutdown capability remote shutdown panel is opened.

7.5.4 CONTROL ROD POSITION INDICATING SYSTEM

See Section 7.7.3.8 for a discussion of the control rod position display instrumentation.

7.5.5 DETAILED CONTROL ROOM DESIGN REVIEW

A detailed review has been conducted of the control room and of the areas outside the control room which may be used to shut down the plant (Section 7.4.2). This detailed review (Reference 5) was conducted to meet the requirements of Supplement 1 to NUREG-0737 and Generic Letter 83-13. Its objective is to improve the ability of the control room operators to prevent accidents or cope with accidents if they occur by improving the information provided to them.

The review was conducted by a team whose members were qualified in Systems and Nuclear Engineering, Reactor Operations, Instrumentation and Control, and Human Factors. The team used several techniques, including (1) survey and inventory of the control panels, (2) task analysis of emergency operating procedures, (3) a review of operating history to identify design deficiencies or other factors contributing to operator error, and (4) Operating personnel questionnaires and interviews. During the conduct of the control room design review, the team concentrated on human engineering deficiencies.

Following their identification, human engineering deficiencies were prioritized to reflect the degree to which operator performance or plant safety may be degraded. The

methodology used was derived from recommendations provided in NUREG-0801 "Evaluation Criteria for Detailed Control Room Design Review".

As a result of the design review, human factors criteria were formulated into a DAEC Human Factors Design Guide, which has been procedurally incorporated into design activities at DAEC.

Implementation of corrections to existing human engineering deficiencies is planned for one phase of short-term enhancements, and three stages of long-term enhancements. The implementation plans and schedules will provide for design change development, training, procedural changes and associated activities which are necessary to assure a safe transition during and following implementation.

The short-term enhancements will consist primarily of relabeling, remimicking, and demarcating the control panels. The long-term enhancements will consist of further design changes on a panel-by-panel basis, such as relocating indicator/recorders, changing ranges and/or scales of indicators, etc.

REFERENCES FOR SECTION 7.5

1. U.S. Nuclear Regulatory Commission, Clarification of TMI Action Plan Requirements, NUREG-0737, 1980.

2. U.S. Nuclear Regulatory Commission, Functional Criteria for Emergency Response Facilities, Final Report, NUREG-0696, 1981.

3. U.S. Nuclear Regulatory Commission, Instrumentation for Light-Water-Cooled Nuclear Power Plants to Assess Plant and Environs Conditions During and Following an Accident Regulatory Guide 1.97, Revision 2, 1980.

4. U.S. Nuclear Regulatory Commission, TMI-2 Lesson Learned Task Force Status Report and Short-Term Recommendations, NUREG-0578, 1979.

5. Letter, R. McGaughy, Iowa Electric, to H. Denton, NRC, Subject: Detailed Control Room Design Review Summary Report, dated December 5, 1986 (NG-86-4251).

6. Letter, R. McGaughy, Iowa Electric, to H. Denton, NRC, Subject: Regulatory Guide 1.97, dated July 3, 1985 (NG-85-2423).

7. Letter, R. McGaughy, Iowa Electric, to H. Denton, NRC, Subject: Plans and Schedules for Implementation of Plant Instrumentation Upgrades for Regulatory Guide 1.97 and Generic Letter 84-23, dated October 16, 1985 (NG-85-4481).

8. Letter, R. McGaughy, Iowa Electric, to H. Denton, NRC, Subject: Emergency Response Capability - Conformance to R. G. 1.97, Rev. 2: Response to Request for Additional Information, dated March 31, 1987 (NG-87-1032).

7.6 ALL OTHER INSTRUMENTATION SYSTEMS REQUIRED FOR SAFETY

7.6.1 NEUTRON MONITORING SYSTEM

7.6.1.1 Safety Objective

The safety objective of the neutron monitoring system is to detect conditions in the core that threaten the overall integrity of the fuel barrier because of excessive power generation and provide signals to the RPS so that the release of radioactive materials from the fuel barrier is limited.

7.6.1.2 Power Generation Objective

The power generation objective of the neutron monitoring system is to provide information for the efficient, expedient operation and control of the reactor. Two specific power generation objectives of the neutron monitoring system are to detect conditions that could lead to local fuel damage and to provide signals that can be used to prevent such damage so that plant availability is not reduced.

7.6.1.3 Identification

The neutron monitoring system consists of the following six major subsystems:

1. Source range monitor (SRM) subsystem.

2. Intermediate range monitor (IRM) subsystem.

3. Local power range monitor (LPRM) subsystem.

4. Average power range monitor (APRM) subsystem.

5. Rod block monitor (RBM) subsystem.

6. Traversing incore probe (TIP) subsystem.

See Figure 7.6-1, Sheets 1 and 2.

7.6.1.4 Source Range Monitor Subsystem

The SRM subsystem which is not safety related provides neutron flux information during reactor startup and low flux level operations. There are four SRM channels, each of which includes one detector that can be physically positioned in the core from the control room. The detectors are inserted into the core for a reactor startup and may be withdrawn if the indicated count rate is between preset limits or if the IRM subsystem is on the third range or above.

The power for the monitors is supplied from the two separate 24-V dc buses, two monitors on one bus and two monitors on the other.

7.6.1.4.1 Power Generation Design Bases

1. A count rate of no less than three counts per second with all control rods fully inserted before initial power operation.

   During subsequent operations, these requirements are met before the reactivity of the core exceeds the reactivity that existed with all control rods fully inserted before initial power operation.

2. The SRM subsystem is designed to indicate a measurable increase in output signal from at least one detecting channel before the indicated reactor period is less than 20 sec during the worst possible startup rod withdrawal conditions.

3. The SRM subsystem is designed to indicate substantial increases in reactivity with the maximum permitted number of SRM channels out of service during normal reactor startup operations.

4. The SRM subsystem is designed so that SRM channels are on scale when the IRM subsystem first indicates neutron flux during a reactor startup.

5. The SRM subsystem provides a measure of the time rate of change of the neutron flux (reactor period) for operational convenience.

6. The SRM subsystem is capable of generating a trip signal to block control rod withdrawal if the count rate exceeds a preset value or falls below a preset limit (if the intermediate range monitors are not above the second range) or if certain electronic failures occur.

7.6.1.4.2 Physical Arrangement

Each detector assembly consists of a miniature fission chamber operated in the pulse-counting mode and attached to a low-loss quartz-fiber-insulated transmission cable (Figure 7.6-2). The sensitivity of the detector is 1.2×10^{-3} cps/nv nominal, 5.0×10^{-4} cps/nv minimum, and 2.5×10^{-3} cps/nv maximum. The detector cable is connected underneath the reactor vessel to the triple-shielded coaxial cable. This shielded cable carries the pulses formed to a pulse current preamplifier located outside the primary containment.

The detector and cable are located inside the reactor vessel in a dry tube sealed against reactor vessel pressure. A remote-controlled detector drive system can move the detector along the length of the dry tube allowing vertical positioning of the chamber at any point from 18 in. above the reactor (fuel) centerline to 2 ft below the reactor fuel region (Figure 7.6-3). The detector can be stopped at any location between the limits of travel, but only the end points of

travel are indicated. When a detector arrives at a travel end point, the detector motion is automatically stopped.

The electronics for the source range monitors, their trips, and their bypasses are all located in one 4-bay cabinet. Source range signal-conditioning equipment is designed so that it may also be used for initial fuel loading.

7.6.1.4.3 Signal Conditioning

A current pulse preamplifier provides amplification and impedance matching to allow signal transmission to the signal-conditioning electronics (Figure 7.6-4).

The signal-conditioning equipment is designed to receive a series of input current pulses, convert the current pulse series to analog dc currents corresponding to a logarithm of the count rate (LCR), to derive the period, to display the outputs on front panel meters, and to provide outputs for remote meters and recorders. The LCR meter displays the rate of the occurrence of the input current pulses, and the period meter displays the time in seconds for the count rate to change by a factor of 2.72. In addition, the equipment contains integral test and calibration circuits, trip circuits, power supplies, and selector circuits.

A high-voltage power supply provides a polarizing potential for the fission counter detectors. The potential is introduced to the detector through a filter network to minimize noise coupling.

The pulses from the pulse preamplifier are of various heights. In general, the pulses produced by neutrons are larger than pulses due to gamma and noise. To count only neutrons, the pulse height discriminator (PHD) is set to reject the small pulses and to accept only the large pulses, the threshold being adjustable. One output of the pulse height discriminator has two stable states represented by full voltage and zero voltage. Each time an input pulse exceeds the threshold, the output of the pulse height discriminator reverses state and holds that state until the next pulse causes another reversal. The pulse height discriminator provides the pulse train input required by the log integrator. The discriminator also has a scaler output that produces an output pulse for each input pulse crossing the threshold. The various signals are shown in the block diagram (Figure 7.6-4) outlined by circles. At (A) the current pulses are shown as four different amplitudes to illustrate the output of the fission chamber. At (B) the absolute amplitudes are increased, but the relative amplitudes remain proportional. A dashed line representing the threshold level is indicated. At (C) there is an output pulse for every input pulse exceeding the threshold. This illustrates the action of the discriminator. This pulse is shaped to be compatible with the scaler input requirements. At (D) the pulse height discriminator produces an output to the log integrator.

The log integrator is a network arranged to synthesize the response, which is a logarithmic function of the counting rate. This log integrator has a time constant that varies with the counting rate. Thus, at low counting rates, the time constant is large to provide an adequate smoothing effect on the reading. At high counting rates, the time constant is small to provide for a faster overall response time.

The output of the log integrator is a current output requiring amplification. Operational amplifier 1 converts the current output from the log integrator to the standard signal used to drive the meter, recorders, trip circuits, and the period amplifier. Operation amplifier 2 is a differentiator with a resistor feedback and a capacitor input. The gain of the amplifier is scaled to produce a full-scale period reading of +10 sec.

Calibration features are included to enable the accuracy of all measuring circuits to be verified and the trip level of the trip circuits to be set and checked. A signal generator provides two discrete frequencies for use in verifying the calibration of the log integrator and provides an operational check on the pulse height discriminator.

7.6.1.4.4 Trip Functions (See Figures 7.6-4 and 7.6-5)

The trip outputs of the SRM subsystem are all designed to operate in the fail-safe mode; the loss of power to the SRM subsystem causes the associated trips to function (see Figure 7.6-4).

The SRM subsystem provides SRM upscale, downscale, detector improper position, and inoperative signals to the reactor manual control system to block rod withdrawal under certain conditions. Any one SRM channel can initiate a rod block. These rod blocking functions are discussed in Section 7.7.3. Appropriate lights and annunciators are actuated to indicate the existence of these same conditions (Table 7.6-1). Any one, but only one at a time, of the four SRM channels can be bypassed by the operation of a switch on the operator's console.

7.6.1.4.5 Power Generation Evaluation

The locations and intensities of the antimony-beryllium neutron-emitting sources and the locations and sensitivities of the SRM detectors are designed to provide a count rate of three counts per second when the reactor is first assembled. Sources are preirradiated at a suitable time before startup to allow for decay before startup. During the remainder of plant operating life, the sources may be used to provide the required neutron count rates. The arrangement of the sources, when used, and SRM detectors in the reactor is shown in Figure 7.6-1.

Design calculations show that if the multiplication of one section of the core is increased to the extent necessary to put that section of the reactor on a 20-sec period, the nearest SRM chamber shows an increase in count rate; in general, at least one detector indicates the change in multiplication. These calculations use the design source intensity and neutron diffusion through the surrounding subcritical core.

Normal startup procedures require specific rod withdrawal patterns in accordance with the banked position withdrawal sequence (BPWS). This scattered withdrawal ensures that the withdrawn control rods are distributed about the core and the multiplication in no one section of the core exceeds the average by a large amount; hence, each SRM chamber can respond to some degree as the initial rod withdrawal is accomplished. One operable SRM channel would be adequate to monitor the approach to criticality using homogeneous patterns of scattered control rod withdrawal. At least two SRM's should be operable to provide added conservatism. The minimum number of required SRM's for each operating mode is provided in the Technical Specifications. For an SRM to be considered operable during Core Alterations, the SRM shall be inserted to the normal operating level.

An examination of the sensitivity of the SRM detectors (Section 7.6.1.4.2) and their operating ranges of 10^6 nv indicates that the IRM subsystem is on scale before the SRM reaches full scale (see Figure 7.6-6). Further overlap is provided by retraction of the SRM chambers to any position between full in and full out.

7.6.1.4.6 Inspection and Testing

Each SRM channel is tested and calibrated using the procedures in the SRM plant operating and maintenance procedures. Inspection and testing is performed as required on the SRM detector drive mechanism; the mechanism can be checked for full insertion and retraction capability. The various combinations of SRM trips can be introduced to ensure the operability of the rod-blocking functions.

7.6.1.5 Intermediate Range Monitor Subsystem

7.6.1.5.1 Safety Design Bases

1. The IRM subsystem is capable of generating a trip signal that can be used to prevent fuel damage resulting from abnormal operational transients that occur while operating in the intermediate power range.

2. The independence and redundancy incorporated in the design of the IRM subsystem is consistent with the safety design basis of the RPS.

7.6.1.5.2 Power Generation Design Bases

1. The IRM subsystem is capable of generating a trip signal to block rod withdrawal if the IRM subsystem reading exceeds a preset value or if the IRM subsystem is not operating properly.

2. The IRM subsystem is designed so that overlapping neutron flux indications exist with the SRM subsystem and power range monitoring subsystems.

7.6.1.5.3 Identification

The IRM subsystem monitors neutron flux from the upper portion of the SRM range to the lower portion of the power range monitoring subsystems. The IRM subsystem has six IRM channels, each of which includes one detector that can be physically positioned in the core by remote control. The detectors are inserted into the core for a reactor startup and are withdrawn after the reactor mode selector switch is turned to RUN.

7.6.1.5.4 Power Supply

Power is supplied separately from two 24-V dc sources. The supplies are split according to their use so that a loss of a power supply will result in a loss of power to the channels associated with only one trip system of the RPS. Conduits and physical separation isolate the power buses external to the IRM cabinet.

7.6.1.5.5 Physical Arrangement

Each detector assembly consists of a miniature fission chamber attached to a low-loss, quartz-fiber-insulated transmission cable. When coupled to the signal-conditioning equipment, the detector produces approximately a 30% reading on the most sensitive range with a neutron flux of 10^8 nv. The detector cable is connected underneath the reactor vessel to a triple-shielded cable that carries the pulses generated in the fission chamber through the primary containment to the preamplifier. The detector and cable are located in the drywell, are movable in the same manner as the SRM detectors, and use the same type of mechanical arrangement (Reference 1 and Figure 7.6-3).

7.6.1.5.6 Signal Conditioning

A voltage amplifier unit located outside the primary containment serves as a preamplifier. This unit is designed to accept superimposed current pulses from the fission chamber, remove the dc component, convert the current pulses to voltage pulses, amplify the voltage pulses, establish the bandpass characteristics for the system, and provide a low impedance output suitable for driving a terminated cable. The gain of the low range of the preamplifier is fixed, but the gain of the high range is variable over a limited range to permit tracking between low and high ranges.

The signal-conditioning equipment for each IRM channel contains an input signal attenuator, additional stages of amplification, an inverter, a mean square analog unit, a calibration and diode logic unit, a range switch, power supplies, trip circuits, and integral test and calibration circuits (Figure 7.6-7). The amplification and attenuation ratios of the IRM and preamplifier are selected by a remote range switch that provides 10 ranges of increasing attenuation (the first 6 called low range and the last 4 called high range) acting on the signal from the fission chamber. This output signal, which is proportional to neutron flux at the detector, is amplified and supplied to a locally mounted meter and an indicator recorder on the main control board. The meter and indicator recorder have two linear scales on a single face. The appropriate range being used is indicated by the range switch position. There is in the amplifier a potentiometer with a gain effect

of 1 to 1.85, which provides an adjustment greater than one range position (approximately a factor of three in flux) in the output signal. The calibration and diode logic unit includes a circuit to develop a triangular wave shape signal of adjustable amplitude to provide a means of full-scale calibration of the power meter. Calibration settings of 40% and 125% on a 125% scale are possible.

The high voltage supply associated with IRM supplies the polarizing potential for the fission chamber detector through a filter network to minimize noise coupling.

7.6.1.5.7 Trip Function

The IRM subsystem is divided into two groups of IRM channels arranged in the core as shown in Figure 7.6-1. IRM channels (A, C, and E) are associated with trip system A of the RPS. IRM channels B, D, and F are associated with trip system B. IRM channels A and B are grouped with SRM channel A in one bay; IRM channels C and D are grouped with SRM channel C; IRM channel E with SRM channel B; and IRM channel F with SRM channel D. Full-length side covers on the cabinet bays isolate the cabinet bays. The arrangement of IRM channels allows one IRM channel in each group to be bypassed without compromising intermediate-range neutron monitoring capability.

Each IRM channel includes four trip circuits as standard equipment. One trip circuit is used as an instrument trouble trip. It operates whenever the high voltage drops below a preset level, whenever one of the modules is not plugged in, or whenever the "Operate-Calibrate" switch is not in the "Operate" position. Each of the other trip circuits can be chosen to operate whenever preset downscale or upscale levels are reached. A simplified circuit arrangement of the IRM trips is shown in Figure 7.6-8.

The trip functions actuated by the IRM trips are indicated in Table 7.6-2. The reactor mode switch determines whether IRM trips are effective in initiating a rod block and a reactor scram (Figure 7.6-5). Section 7.7.3 describes the IRM rod block trips. With the reactor mode switch in REFUEL or STARTUP, an IRM upscale or inoperative trip signal actuates a neutron monitoring system trip of the RPS. Only one IRM channel must trip to initiate a neutron monitoring system trip of the associated trip system of the RPS.

7.6.1.5.8 Safety Evaluation

The safety evaluation in Section 7.2 evaluates the arrangement of redundant input signals to the RPS. The neutron monitoring system trip input to the RPS and the trip channels used in actuating a neutron monitoring system trip are of equivalent independence and redundancy to other RPS inputs.

The number and locations of the IRM detectors have been analytically and experimentally determined to provide sufficient intermediate-range flux level information under the worst permitted bypass or detector failure conditions. For verification of this, a rod withdrawal error during startup events (See Section 15.1.4.2) has been analyzed. The most severe case assumes that the reactor is just subcritical with one-fourth of the control rods plus one more rod removed in the normal operating sequence. This configuration is illustrated in Figure 7.6-9. The error or malfunction is the removal of the control rod adjacent to the last rod withdrawn. The location of this rod has been chosen to maximize the distance to the second nearest detector for each RPS trip system. It is assumed that the nearest detector in each RPS trip system is bypassed. A scram signal is initiated when one IRM detector in each RPS trip system reaches its scram trip level.

To ensure that each intermediate range monitor is on the correct range, a rod block is initiated any time the monitor is both downscale and not on the most sensitive (lowest) scale. A rod block is initiated if the IRM detectors are not fully inserted in the core and the reactor mode switch is not in the RUN mode. The IRM rod block trips are automatically bypassed when the reactor mode switch is in the RUN position.

The IRM detectors and electronics have been tested under operating conditions and verified to have the operational characteristics given in the description, and as such, provide the level of precision and reliability required by the RPS safety design basis.

7.6.1.5.9 Power Generation Evaluation

The IRM subsystem is the primary source of information on the approach of the reactor to the power range. Its linear, approximate half-decade steps, with the rod-blocking features on both high flux level and low flux level, require that the operator keep all the intermediate range monitors on the correct range to increase core reactivity by rod motion. The source range monitor overlaps the intermediate range monitor as shown in Figure 7.6-6. The sensitivity of the intermediate range monitor is such that the IRM subsystem is on scale on the least sensitive (highest) range with the reactor power about 15%.

7.6.1.5.10 Inspection and Testing

Each IRM channel is tested and calibrated using the procedures in the IRM plant operating and maintenance procedures. The IRM detector drive mechanisms and the IRM rod-blocking functions are checked in the same manner as for the SRM channels. Each of the various IRM channels can be checked to ensure that the IRM high flux scram function is operable.

7.6.1.6 Local Power Range Monitor Subsystem

The LPRM subsystem consists of the fission chamber detectors, the signal-conditioning equipment, and trip functions. The LPRM signals are also used in the APRM subsystem, RBM subsystem, and the process computer.

No safety design bases are specified for the local power range monitors; however, since they form inputs to the APRM subsystem, a minimum number of these monitors must be operable for each average power range monitor as defined in the APRM safety design basis.

7.6.1.6.1 Power Generation Design Bases

1. The LPRM subsystem provides signals proportional to the local neutron flux at various locations within the reactor core to the APRM subsystem so that accurate measurements of average reactor power can be made.

2. The LPRM subsystem supplies signals to the RBM subsystem so that measurements of changes in local relative neutron flux can be made during the movement of control rods.

3. The LPRM subsystem is capable of alarming under conditions of high or low local neutron flux indication.

4. The LPRM subsystem supplies signals proportional to the local neutron flux to the process computer to be used in power distribution calculations, local heat flux calculations, minimum critical heat flux calculations, and fuel burnup calculations.

5. The LPRM subsystem supplies signals proportional to the local neutron flux to drive indicating meters and auxiliary devices to be used for the evaluation of the power distribution, local heat flux, minimum critical heat flux, and fuel burnup rate.

7.6.1.6.2 Power Supply

Power for the LPRM subsystem is supplied by the two RPS buses; approximately one-half of the local power range monitors are supplied from each bus. Associated with each LPRM amplifier is a separate power supply in the control room that furnishes the detector polarizing potential. This power supply is adjustable from 50-V to 200-V dc with a maximum current output of 3 mA, which ensures that the chambers can be operated in the saturated region at the maximum specified neutron fluxes. For maximum variation in the input voltage or line frequency, and over extended ranges of temperature and humidity, the output voltage varies no more than 2 V. Each "page" of amplifiers is supplied an operating voltage from a separate low voltage power supply.

7.6.1.6.3 Physical Arrangement

The LPRM subsystem includes LPRM detectors located throughout the core at different axial heights. Figure 7.6-1, Sheet 1, illustrates the LPRM detector radial layout scheme, which provides a detector assembly at every fourth intersection of the narrower of the water channels around the fuel bundles (narrow-narrow water gap). Thus, every narrow-narrow water gap has either an actual detector assembly or a symmetrically equivalent assembly in some other quadrant.

The 20 LPRM detector assemblies are distributed to monitor 4 horizontal planes throughout the core. The detector assemblies (Figure 7.6-11) are inserted into the core in spaces between the fuel assemblies through thimbles that are mounted permanently at the bottom of the core lattice and that penetrate the bottom of the reactor vessel. These thimbles are welded to the reactor vessel at the penetration point. They extend down into the access area below the reactor vessel where they terminate in a flange that mates to the mounting flange on the incore detector assembly. The detector assemblies are locked at the top end to the top fuel guide by means of a spring-loaded plunger. This type of assembly is referred to as top entry-bottom connect, since the assembly is inserted through the top of the core and penetrates the bottom of the reactor vessel. Special water sealing caps are placed over the connection end of the assembly and over the penetration at the bottom of the vessel during the installation or removal of an assembly. This prevents the loss of reactor coolant water upon the removal of an assembly and also prevents the connection end of the assembly from being immersed in the water during installation or removal.

Each LPRM detector assemblies contain four miniature fission chambers with an associated solid-sheath cable. Each fission chamber produces a current which when coupled with the LPRM signal-conditioning equipment provides the desired scale deflection throughout the design lifetime of the chamber. Each individual chamber of the assembly is a moisture-proof, pressure-sealed unit. Each assembly also contains a calibration tube for a traversing incore probe. The enclosing tube around the entire assembly contains holes evenly spaced along its length. These holes allow the circulation of the reactor coolant water to cool the fission chambers. Numerous tests have been performed on the chamber assemblies including tests of linearity, lifetime, gamma sensitivity, and cable effects.[1] These tests and experience in operating reactors provide confidence in the ability of the LPRM subsystem to monitor neutron flux to the design accuracy throughout the design lifetime.

The miniature fission chambers used on each assembly are designed to operate up to a temperature of 575°F and a pressure of 1250 psig. The chambers are vertically spaced in the LPRM detector assemblies in such a manner as to give adequate axial coverage of the core, complementing the radial coverage given by the horizontal arrangement of the LPRM detector assemblies. Each miniature chamber consists of two concentric cylinders, which act as electrodes. The inner cylinder, the collector, is mounted on insulators and is separated from the outer cylinder by a small gap. The gas between the electrodes is ionized by the charged particles produced as a result of neutron fissioning of the uranium-coated outer electrode. The chamber is operated at a polarizing potential of approximately 150 V. The negative ions produced in the gas are accelerated to the collector by the potential difference maintained between the electrodes. In a given neutron flux, all the ions produced in the ion chamber can be collected if the polarizing voltage is high enough. When this situation exists, the ion chamber is considered to be saturated. Output current is then independent of operating voltage.

7.6.1.6.4 Signal Conditioning

The current signals from the LPRM detectors are transmitted to the LPRM amplifiers in the main control room. Each amplifier is a modular plug-in element that is mounted in a hinged vertical assembly designated a "page." The current signal from a chamber is transmitted directly to its amplifier through coaxial cable. The amplifier is a linear current amplifier whose voltage

output is proportional to the current input and therefore is proportional to the magnitude of the neutron flux. The output of the amplifier ranges from 0 to 10 VDC for 125% indication. Low-level output signals are provided that are suitable as an input to the computer, recorders, etc. The outputs of each LPRM amplifier are isolated to prevent the interference of the signal by inadvertent grounding or the application of a stray voltage at the signal terminal point.

The LPRM amplifier signals can be read by the operator on the reactor console. When a central control rod is selected for movement, the output signals from the amplifiers associated with the nearest 16 LPRM detectors are displayed on console meters. The 4 LPRM detector signals from each of the 4 LPRM assemblies are displayed on 16 separate meters. The operator can readily obtain the readings of all the LPRM amplifiers by selecting the control rods in the proper order. Section 7.7.3 describes in greater detail the indications on the reactor console.

7.6.1.6.5 Trip Functions

2015-002 The trip circuits for the LPRM subsystem provide trip signals to activate lights and annunciators. Table 7.6-3 indicates the trips. The LPRM upscale and LPRM downscale trip circuits use a separate 5V dc power supply and do not trip on a loss of power; however, the LPRM downscale will trip when power is not available for the LPRM amplifiers.

The trip levels can be adjusted to within ±0.5% of full-scale deflection and are accurate to ±1% of full-scale deflection in the normal operating environment.

7.6.1.6.6 Power Generation Evaluation

The LPRM subsystem, as calibrated by the TIP subsystem, provides detailed information about the neutron flux throughout the reactor core.

The LPRM distribution is determined by extensive calculational and experimental procedures. The division of the LPRM subsystem into various groups for dc power supply allows operation with one dc power supply failed or being serviced without limiting reactor operation. Individual failed chambers can be bypassed, and neutron flux information for a failed chamber location can be interpolated from nearby chambers. A substitute reading for a failed chamber can be derived from an octant-symmetric chamber, or an actual flux indication can be obtained by the insertion of a traversing incore probe to the failed chamber position.

The LPRM outputs provide for the functions required in the LPRM power generation design basis. Each output is electrically isolated so that an event (grounding the signal or applying a stray voltage) on the sensor end does not destroy the validity of the LPRM signal. Tests and experience attest to the ability of the detector to respond proportionately to the local neutron flux changes.

7.6.1.6.7 Inspection and Testing

LPRM channels are calibrated using data from previous full power runs and TIP data and are tested by procedures in the applicable plant operating and maintenance procedures.

7.6.1.7 Average Power Range Monitor Subsystem

The APRM subsystem has six APRM channels, each of which uses input signals from a number of LPRM channels. Three APRM channels are associated with each of the trip systems of the RPS.

7.6.1.7.1 Safety Design Bases

1. The design of the APRM subsystem is such that for the worst LPRM bypass and failure conditions permitted for inputs to an APRM subsystem, the APRM subsystem is capable of generating a scram trip signal in response to average neutron flux increases resulting from abnormal operational transients in time to prevent fuel damage. If the number of LPRM inputs to an APRM channel, as indicated by the LPRM mode switches, is reduced below that required for the APRM channel to respond to transients within the analyzed time, the APRM channel is automatically placed in the inoperable (tripped) condition (too-few-inputs-inop trip).

2. The design of the APRM subsystem is consistent with the requirements of the safety design basis of the RPS.

7.6.1.7.2 Power Generation Design Bases

1. The APRM subsystem provides a continuous indication of average reactor power from a few percent to 125% of reactor power.

2. The APRM subsystem is capable of providing trip signals for blocking rod withdrawal when the average reactor power exceeds preestablished limits, thus preventing scram actuation.

3. The APRM subsystem provides a reference power level for use in the RBM subsystem.

7.6.1.7.3 Power Supply

The APRM channels receive power from the 120-V ac supplies used for the RPS power. Power for each APRM trip unit is supplied from the same power supply as the APRM that it services.

7.6.1.7.4 Signal Conditioning

The APRM subsystem uses electronic equipment that averages the output signals from a selected set of local power range monitors, trip units that actuate automatic devices, and signal readout equipment. Each APRM channel can average the output signals from up to 24 local power range monitors. The assignment of local power range monitors to an average power range monitor is made using the pattern illustrated in Figure 7.6-1, Sheet 2. The letters at the detector locations in Figure 7.6-1, Sheet 2, refer to the axial positions of the detectors in the LPRM detector assembly. Position A is the bottom position, positions B and C are above position A, and position D is the topmost LPRM detector position. APRM channels A, C, and E are powered from the same ac bus used for trip system A of the RPS; APRM channels B, D, and F are powered from the ac bus used for trip system B. The dc bus used for a given APRM channel is the same as that used for half the local power range monitors providing inputs to that average power range monitor. Table 1A in Figure 7.6-1, Sheet 2, is for the average power range monitors associated with trip system A of the RPS. The pattern provides LPRM signals from all four core axial LPRM detector positions through the core. The assignments of local power range monitors to average power range monitors associated with trip system B of the RPS are also given in Table 1B of Figure 7.6-1, Sheet 2. APRM channel E averages output signals from 20 local power range monitors, and APRM channel F averages 20 LPRM outputs; APRM channel A and B average outputs from 20 local power range monitors and APRM channels C and D average 20 LPRM outputs.

In April of 1990, the DAEC experienced a reactor scram due to a LPRM spike. It was discovered that the NA200 and early NA300 type LPRMs exhibit unexpected spiking problems. Further, it was determined that the LPRM operating amplifier can saturate from a power supply transient, thus exacerbating the spiking problem. If the spike were to occur in an LPRM that has a shared input to either A and B APRMs or C and D APRMs, a full scram from a single failure would result. Failure of the electronics associated with an LPRM having shared inputs to two APRM channels would cause the same system response. To avoid the increased probability of an inadvertent reactor scram, operation with one of each of the shared APRMs within each RPS trip system in bypass using the installed joystick, except during periods of surveillance testing, will be performed.

The APRM amplifier gain can be adjusted by the combination of fixed resistors and potentiometers to allow calibration to power as determined by a heat balance. The averaging circuit automatically corrects for the number of unbypassed LPRM amplifiers providing inputs to the average power range monitor.

Each APRM channel receives two independent redundant flow signals representative of total core flow. These two flow signals are used with the three average power range monitors in one trip system. Each signal is provided by summing the flow signals from the two recirculation loops. These redundant flow signals (Figure 7.6-12) are sensed from two flow elements, one in each recirculation loop. Each flow element has two sets of taps; the differential pressure from these taps is routed separately to eight differential-pressure transducers. The transducers and other signal- conditioning equipment are separated in a way that provides two independent flow

signals for use by the three average power range monitors in each trip system. No single active component failure can cause more than one of these two redundant signals to read incorrectly.

In order to obtain the proper (most conservative) reference signal under single-failure conditions, each APRM is supplied with two redundant and isolated flow signals associated with that trip system. These flow signals are routed to a low auction circuit, which selects the lower (more conservative) of the two signals for use as the scram trip reference for that particular average power range monitor. Because there are two redundant flow units assigned to each trip system, one flow unit in each trip system can be bypassed for a short period of time. This design meets the requirements of IEEE 279.

7.6.1.7.5 Trip Function

The trip units for the average power range monitors supply trip signals to the RPS and the reactor manual control system. Table 7.6-4 itemizes the APRM trip functions. Any one APRM can initiate a rod block, depending on the position of the reactor mode switch. Section 7.7.3 describes in detail the APRM rod block functions. The APRM upscale rod block and the scram trip setpoints are varied as a function of reactor recirculation driving loop flow. The slope of the upscale rod block alarm and the scram response curves are set to allow tracking of the required trip setpoint with recirculation driving loop flow characteristics. An APRM upscale or inoperative trip initiates a neutron monitoring system trip in the RPS. In the startup mode, the upscale trip is set at a fixed 15% of rated power, whereas the upscale trip varies with recirculation loop flow in the run mode. This APRM trip is provided in addition to the existing IRM trip in the startup mode.

Only the trip system associated with that average power range monitor is affected; thus, at least one APRM channel in each trip system of the RPS must trip to cause a scram (see Figure 7.6-5).

Because each trip is actuated by removing voltage to a relay coil, loss of power results in actuating the trips. The trips from one average power range monitor in each trip system of the RPS can be bypassed by operator action in the main control room. A simplified APRM circuit arrangement is shown in Figure 7.6-13.

7.6.1.7.6 Safety Evaluation

Each average power range monitor derives its signal from information obtained from the LPRM subsystem. The assignment, power separation, cabinet separation, and LPRM signal isolation are in accordance with the safety design basis of the RPS. There are six APRM channels, three for each RPS trip system, to allow one bypass and one random failure in each trip system and still satisfy the RPS safety design basis.

Figure 7.6-14 illustrates the ability of the APRM subsystem to track core power versus coolant flow starting at 100% power and 100% flow to below the 65% flow point. Figure 7.6-15 illustrates the ability of the average power range monitor to respond to control rod motion. The conditions for this are selected from the most restrictive case. The figure illustrates a full withdrawal of a control rod from limiting conditions at rated power. Normal control rod manipulation results in good agreement (less than 5% deviation on the worst average power range monitor) through a wide range of power levels.

The adequacy of the flow-referenced APRM scram setpoint is demonstrated to be adequate in preventing fuel damage as a result of abnormal operational transients (including thermal-hydraulic instability events) by the analyses in Chapter 15.

7.6.1.7.7 Power Generation Evaluation

The APRM subsystem provides the operator with six continuous recordings of the average reactor power. The rod-blocking function prevents operation above the region defined by the design power response to recirculation flow control. The flow signal used to vary the rod block level is supplied from the recirculation system flow instrumentation. Two flow comparators monitor the two flow signals and initiate a rod block if the two flow signals are not in agreement. Because any one of the average power range monitors can initiate a rod block, this function has a high level of redundancy and satisfies the power generation design basis. One APRM channel in each RPS trip system may be bypassed. In addition, a minimum of 13 LPRM inputs for APRM channels E, F, or 9 for APRM channels A, B, C, D, is required for each APRM channel to be operative. If the number is less than this, an automatic APRM inoperative trip is generated.

7.6.1.7.8 Inspection and Testing

APRM channels are calibrated using data from previous full-power runs and are tested by procedures in the applicable plant operating and maintenance procedures. Each APRM channel can be individually tested for the operability of the APRM scram and rod-blocking functions by introducing test signals.

7.6.1.8 Rod Block Monitor Subsystem

The RBM subsystem has two RBM channels, each of which uses input signals from a number of LPRM channels. The RBM subsystem is not safety related. A trip signal from either RBM channel can initiate a rod block. One RBM channel may be bypassed without a loss of subsystem function. The minimum number of LPRM inputs required for each RBM channel to prevent an instrument inoperative alarm is four when using four LPRM assemblies, three when using three LPRM assemblies, and two when using two LPRM assemblies (see Figure 7.6-16).

7.6.1.8.1 Power Generation Design Bases

1. The RBM subsystem is designed to assist the operator in preventing local fuel damage as a result of a single rod withdrawal error under the worst-permitted condition of RBM bypass.

2. The RBM subsystem provides a signal to permit operator evaluation of the change in the local relative power level during control rod movement.

3. The RBM subsystem is designed and built to meet appropriate protection system criteria.

7.6.1.8.2 Power Supply

The RBM subsystem power is received from 120-V ac supplies for the RPS.

7.6.1.8.3 Signal Conditioning

The RBM signal is generated by averaging a set of LPRM signals. Each of the RBMs averages the signals from a set of LPRM detectors at various core heights. The assignment scheme is intended to provide similar responses between the two RBMs, to provide a high response to rod motion, and to provide high availability. The specific assignment scheme is described in Reference 1a. The assignment of power range detector assemblies to be used in RBM averaging is controlled by the selection of control rods. Figure 7.6-16 illustrates the four possible assignment combinations. Note that the rod block monitor is automatically bypassed and the output set to zero if a peripheral control rod is selected. If any LPRM detector assigned to a rod block monitor is bypassed, the computed average signal is adjusted automatically to compensate for the number of LPRM input signals to average.

The magnitude of each RBM channel output is normalized whenever a control rod is selected. The RBM signals are calibrated to a reference signal. The specific normalization procedure (gain setting) is described in Reference 1a. This gain setting is held constant during the movement of that particular control rod, thus providing an indication of the change in the relative, local power level. A signal from one APRM channel assigned to each RPS trip system supplies a reference signal for the RBM channel on that same trip system. This reference signal is used to determine the trip setpoint which is power biased (see Section 7.6.1.8.4). If the APRM is indicating less than 30% power, the rod block monitor is zeroed and the RBM outputs are bypassed. If the APRM is bypassed, the signal is automatically provided by a second average power range monitor.

In the operating range, the RBM signal is accurate to about 1% of full scale of the correct signal including all variances due to drift, environmental changes (normal control room variations), and supply voltage variations.

7.6.1.8.4 Trip Function

The rod block monitor supplies a trip signal to the reactor manual control system to inhibit control rod withdrawal. The trip is initiated whenever the RBM output exceeds the rod block setpoint, or an inoperative condition occurs. The RBM logic is modified to ensure that the inoperative condition and rod block are enforced upon loss of any power supply; in particular, loss of power to the LPRM selection logic in either RBM results in both RBM channels being inoperative and providing rod blocks. There are three rod block setpoints. These setpoints are a function of the core thermal power. The three setpoints and the power ranges over which each is implemented are adjustable. The ranges of adjustability are given in Reference 1a. The specific values allowable and the power ranges of applicability selected for the DAEC are given in the Technical Specifications. One of the two rod block monitors can be bypassed at any time by operator action, provided the specific values allowable and the power ranges of applicability are met as defined in the Technical Specifications. Either rod block monitor can inhibit control rod withdrawal (Figure 7.6-5). The RBM nominal trip level settings are:

RBM upscale low power trip setpoint ≤ 115/125 of full scale.
RBM upscale intermediate power trip setpoint ≤ 109/125 of full scale.
RBM upscale high power trip setpoint ≤ 105/125 of full scale.
RBM downscale ≥ 94/125 of full scale.
RBM inoperative N/A

7.6.1.8.5 Isolation

The following features are included in the RBM subsystem design (Figure 7.6-12):

1. Redundant, separate, and isolated RBM channels are provided.

2. Separation of LPRM signals such that any single short or open circuit of any single LPRM input to the RBM will not affect any other LPRM inputs to the same RBM.

3. Redundant, separate, isolated rod selection information (including isolated contacts for each rod selection push button) is directly inputted to each of the RBM channels.

4. Independent, separate, isolated APRM reference signals are inputted to each RBM channel.

5. Independent, separate, isolated RBM level readouts and status displays are provided from the RBM channels.

6. Independent, separate, isolated rod block signals are outputted from the RBM channels to the manual control system circuitry.

The RBM subsystem is designed to meet the requirements of IEEE 279 (August 1968) except for physical limitations as follows:

	Limitation	Reason
1.	A single rod select push button will be used for the selection of a rod.	A single push button for the selection of a rod is provided, but redundant contacts are provided on the push button.
2.	The LPRM meter displays will be grouped, but electrically isolated from the local power range monitors and each other.	Grouped displays having A, B, C, D local power range monitors located n the same area of the main control panel; however, circuit isolation is provided for LPRM outputs to the LPRM meters.
3.	The rod withdrawal block outputs from the rod block monitor will be carried to a single cabinet for connection into the reactor manual control system.	Each rod block monitor activates a distinctive annunciating block (i.e., RBM A activates annunciating rod block A, RBM B activates annunciating rod block B), which is used in different portions of reactor manual control circuits. Both rod block monitors actuate a single nonannunciating rod block used in one portion of the reactor manual control circuit (Section 7.7.3).
4.	A single switch will allow one-out-of-two bypass of RBM outputs to the manual control system.	A single switch is provided; however, isolation requirements are maintained.
5.	Separation and redundancy of inputs.	Improves similarity of channel responses.

7.6.1.8.6 Power Generation Evaluation

The motion of a control rod causes the local power range monitors adjacent to the control rod to respond strongly to the change in power in the region of the rod in motion. Since the rod block monitor utilizes the signals from the LPRMs, it is capable of determining the approach of local thermal flux conditions which could result in local fuel damage. The fact that either RBM channel can, independently, initiate a rod block, provides assurance that rod withdrawal error is terminated even with one RBM channel bypassed.

The effectiveness of the RBM to prevent local fuel damage as a result of a single rod withdrawal error is reanalyzed for every core reload. A description of the rod withdrawal error analysis is presented in Section 15.4.1.

7.6.1.8.7 Inspection and Testing

The RBM channels are tested and calibrated by procedures given in the applicable plant operating and maintenance procedures. The rod block monitors are functionally tested by introducing test signals into the RBM channels.

7.6.1.9 Traversing Incore Probe Subsystem

The TIP subsystem includes three TIP channels, each of which has the following components:

1. One traversing incore probe.

2. One drive mechanism.

3. One indexing mechanism.

4. Up to 10 incore guide tubes.

5. One chamber shield.

The subsystem, which is not safety related allows the calibration of LPRM signals by correlating TIP signals to LPRM signals as the probe is positioned in various radial and axial locations in the core. The guide tubes inside the reactor are divided into groups. Each group has its own associated TIP channels. The assignment of LPRM strings to the three TIP channels is shown in Figure 7.6-17.

7.6.1.9.1 Power Generation Design Basis

1. The TIP subsystem is capable of providing a signal proportional to the axial gamma flux distribution at selected small axial intervals over the regions of the core where power range detector assemblies are located. This signal is of high precision to allow reliable calibration of LPRM gains.

2. The TIP subsystem provides accurate indication of the flux measurement to allow pointwise or continuous measurement of the axial gamma flux distribution.

7.6.1.9.2 Physical Arrangement

A TIP drive mechanism uses an ion chamber (gamma flux detector) attached to a flexible drive cable, which is driven from outside the primary containment by a gearbox assembly. The flexible cable is contained by guide tubes that continue into the reactor core. The guide tubes are a part of the power range detector assembly and are specially prepared to provide a durable low-friction surface. The indexing mechanism allows the use of a single detector in any one of up to 10 different tube paths. The tenth tube is used for TIP cross-calibration with the other TIP channels. The control system provides both manual and semiautomatic operation. The TIP

voltage signal is amplified and sent to a local meter, a recorder (which is not normally used), and the Plant Process Computer for use by nuclear monitoring routines. A block diagram of the drive system is shown in Figure 7.6-18.

The heart of each TIP channel is the traversing incore probe (Figure 7.6-19), consisting of a gamma detector and the associated drive cable. The flux probing monitor operates in conjunction with the traversing incore flux detectors to provide a readout and an X-Y plot of the gamma flux level throughout the reactor core.

The signal current from the detector is transmitted from the traversing incore probe to amplifiers and readout equipment by means of a signal cable, which is an integral part of the mechanical drive cable. The outer sheath of the drive cable is constructed of carbon steel in a helix array. The cable drive mechanism engages this helix to effect movement in and out of the guide tubes. The inner surface of the guide tubing between the reactor vessel and the drive mechanism is coated with a ceramic-bonded lubricant to reduce friction. Within the reactor vessel the guide tubing inner surface is nitrided.

The cable drive mechanism contains the drive motor, the cable take-up reel, an analog probe position indicator for the recorder, and a mechanical counter to provide digital pulses to the control unit for positioning the TIP at specific locations along the guide tube.

The drive mechanism inserts and withdraws the traversing incore probe and its cable from the reactor and provides detector position indication signals. The drive mechanism consists of a motor and drive gear-box that drives the cable in the manner of a rack and pinion. A two-speed motor is used providing a high speed for insertion and withdrawal (60 fpm) and a low speed for scanning the reactor core (7.5 fpm) (Figure 7.6-20).

A take-up reel is included in the cable drive mechanism to coil the drive cable as it is withdrawn from the reactor. This reel makes it possible to connect the traversing incore probe and its cable to the amplifier through a connector.

The analog position indicator and the mechanical counter (digital) are also driven directly from the output shaft of the cable drive motor. The analog position signal from a potentiometer and a flux amplifier output are used to plot gamma flux versus incore position of the probe. The TIP position signal is also available to the process computer. The digital counter is used to position the traversing incore probe in the guide tube through the control logic with a linear position accuracy of plus or minus 1 in. The digital counter can control TIP positions at the top of the core for the initiation of scan, and at the bottom of the core for changing to fast withdrawal speed.

A position limit switch provides an electrical interlock release when the probe is in the nominal zero position to allow the indexing mechanism to index the probe to the next guide tube location. The limit switch is actuated when the end of the traversing incore probe passes a switch in the guide tube in use. The cable drive motor includes an ac voltage-operated brake to prevent coasting of the probe after a desired incore position is reached. When the system is not

in use, the detector probe can be completely withdrawn to a position in the center of the chamber shield.

A circular transfer machine with 10 indexing points functions as an indexing mechanism. Nine of these locations are for the guide tubes associated only with that particular TIP channel. The 10th location is for the guide tube common to all the TIP channels. Indexing to a particular tube location is accomplished manually at the control panel by means of a position selector switch that energizes the electrically actuated rotating mechanism.

The tube transfer mechanism is part of the indexing mechanism and consists of a fixed circular plate containing ten holes on the outside of the indexing mechanism, which mate to a rotating single-hole plate on the inside of the indexing mechanism.

The rotating plate aligns and mechanically locks with each fixed-hole position in succession. The indexing mechanism is actuated by a motor-operated rotating drive. Electrical interlocks prevent the indexing mechanism from changing positions until the probe cable has been completely retracted beyond the transfer point. Additional electrical interlocks prevent the cable drive motor from moving the cable until the transfer mechanism has indexed to the preselected guide tube location (see Figure 7.6-21).

A valve system is provided with a valve on each guide tube entering the primary containment. These valves are closed except when the TIP subsystem is in operation. A ball valve and a cable shearing valve are mounted in the guide tubing just outside the primary containment. They prevent the loss of reactor coolant in the event a guide tube ruptures inside the reactor vessel. A valve is also provided for a nitrogen gas purge line to the indexing mechanisms. A guide tube ball valve opens only when the traversing incore probe is being inserted. The shear valve is used only if a leak occurs when the traversing incore probe is beyond the ball valve and power to the TIP subsystem fails. The shear valve, which is controlled by a manually operated key-lock switch, can cut the cable and close off the guide tube. The shear valves are actuated by detonation squibs. The continuity of the squib circuits is monitored by indicator lights in the control room.

A guide tube ball valve is normally deenergized and in the closed position. When the traversing incore probe starts forward the valve is energized and opens. As it opens it actuates a set of contacts that gives a signal light indication at the TIP subsystem control panel and bypasses an inhibit limit switch that automatically stops TIP motion if the ball valve does not open on command (see Figure 7.6-21).

7.6.1.9.3 Signal Conditioning

The readout instruments and electrical controls for the TIP machines are mounted in a cabinet in the main control room. Since there are several groups of guide tubes, each with an associated TIP machine, there are also several groups of readout equipment controls mounted in the cabinet. Each set of readout equipment consists of a dc amplifier and a dc power supply for the TIP polarizing voltage. A common X-Y output is provided for use by the process computer.

The probe and cable leakages contribute less than 1% of full scale output. Actual operating experience has shown the system to reproduce within 1.0% of full scale in a sequence of tests.[1]

7.6.1.9.4 Power Generation Evaluation

An adequate number of TIP machines is supplied to ensure that each LPRM assembly can be probed by a traversing incore probe and that one LPRM assembly (the central one) can be probed by every traversing incore probe to allow intercalibration. Typical probes have been tested to prove linearity. The system has been field tested in an operating reactor to ensure reproducibility for repetitive measurements, and the mechanical equipment has undergone life testing under simulated operating conditions to ensure that all specifications can be met. The system design allows semiautomatic operation for LPRM calibration and process computer use. The TIP machines can be operated manually to allow pointwise flux mapping.

7.6.1.9.5 Inspection and Testing

The TIP subsystem equipment is tested and calibrated using heat balance data and procedures as described in the TIP plant operating and maintenance procedures.

7.6.2 REFUELING INTERLOCKS

During refueling, the reactor vessel head is removed, allowing direct access to the core. Refueling operations include the removal of reactor vessel upper internals and the movement of spent and fresh fuel assemblies between the core and the fuel storage pool. The refueling platform and the equipment handling hoists on the platform are used to accomplish the refueling. The refueling interlocks reinforce operational procedures that prohibit taking the reactor critical under certain situations encountered during refueling operations by restricting the movement of control rods and the operation of refueling equipment.

The refueling interlocks include circuitry that senses the condition of the refueling equipment and the control rods. Depending on the sensed condition, interlocks are actuated to prevent the movement of the refueling equipment or withdrawal of control rods (rod block). Circuitry is provided that senses the following conditions:

1. All rods inserted.

2. Refueling platform positioned near or over the core.

3. Refueling platform hoists fuel-loaded (fuel grapple, frame-mounted hoist, trolley-mounted hoist).

4. Fuel grapple not full up.

A two-channel dc circuit indicates that all rods are in. The rod-in condition for each rod is established by the closure of a magnetically operated reed switch in the rod position indicator probe. The rod-in switch must be closed for each rod before the "all rods in" signal is generated;

two channels carry the signal. Both channels must register the "all rods in" signal in order for the refueling interlock circuitry to indicate the "all rods in" condition.

The refueling platform is provided with two mechanical switches attached to the platform that are tripped open by a long, stationary ramp mounted adjacent to the platform rail. The switches open before the platform or any of its hoists are physically located over the reactor vessel, thereby providing indication of the approach of the platform toward the core or its position over the core.

Load sensing is accomplished by the use of mechanical load cells on the frame-mounted and trolley-mounted hoists, and by a solid-state load cell system on the main fuel hoist. Associated interlock and load functions are performed by micro-switches on the mechanical load cells and by relays on the solid state main fuel hoist lead cell. In addition, a digital readout of the main hoist load is mounted in the operators cab.

The three hoists on the refueling platform and the hoist on the service platform are provided with devices that open when the hoists are fuel-loaded. These devices are set to open at a load weight that is lighter than the weight of a single fuel assembly, thus providing positive indication whenever fuel is loaded on any hoist. The fuel grapple hoist load switch shall be set at ≤ 400 lbs. If the frame-mounted auxillary hoist, the monorial-mounted auxillary hoist, or the service platform hoist is to be used for handling fuel with the head off the reactor vessel, the load limit switch on the hoist to be used shall be set at ≤ 400 lbs

The telescoping fuel grapple hoist is provided with a geared limit switch, which is open any time the grapple has descended more than about 4 in. from its full-up position. This switch is placed in series with the grapple load switch to ensure interlock operation in the event that the weight of the bottom section of the telescope plus the fuel is less than the preset load.

The indicated conditions are combined in logic circuits to satisfy all restrictions on refueling equipment operation and control rod movement, as described in Figure 7.7-2, Sheet 6, and in the following:

1. Refueling platform travel toward the core is stopped when the following three conditions exist concurrently:

    a. Any refueling platform hoist is loaded or the grapple is not in its full-up position.

    b. Not all rods in.

    c. Refueling platform position is such that the position switch is open (platform near or over the core).

2. With the mode switch in STARTUP, refueling platform travel toward the core is prevented when the refueling platform position switch is open (platform near or over the core).

3.a. The description in UFSAR Section 7.6.2 for Interlock #3 should be broken into two parts and described as follows:

1. One rod withdrawn, deselected, and then the same or alternate rod selected with the Mode Switch remaining continuously in REFUEL.

2. The refueling platform position switch is open (platform near or over the core).

3.b. With the Mode Switch in SHUTDOWN or RUN, refueling platform travel towards the core is prevented when the following two conditions exist concurrently:

1. One or more rods withdrawn.

2. The refueling platform position switch is open (platform near or over the core).

4. The refueling platform frame mounted hoist LIFT electrical circuit is open when the following three conditions exist concurrently:

a. Frame mounted hoist fuel-loaded.

b. Not all rods in.

c. Refueling platform near or over the core.

5. The refueling platform trolley mounted hoist LIFT electrical circuit is open when the following three conditions exist concurrently:

a. Trolley mounted hoist fuel-loaded.

b. Not all rods in.

c. Refueling platform near or over the core.

6. Operation of the telescoping fuel grapple is prevented when the following two conditions exist concurrently:

a. Not all rods in.

b. Refueling platform near or over the core.

7. With the mode switch in REFUEL, any one of the following two conditions prevents a control rod withdrawal:

a. Refueling platform over the core with a load on any refueling platform hoist or the fuel grapple not fully up.

b. Selection of a second rod for movement with any other rod withdrawn from the fully inserted position.

8. With the mode switch in STARTUP, the following condition prevents a control rod withdrawal:

a. Refueling platform over the core.

The prevention of a control rod withdrawal is accomplished by opening contacts at two different points in the rod block circuitry; the prevention of refueling equipment operation is accomplished by interrupting the power supply to the equipment.

During refueling operations no more than one control rod may be withdrawn; this is enforced by a redundant logic circuit that uses the "all rods in" signal and a rod selection signal to prevent the selection of a second rod for movement with any other rod not fully inserted. The simultaneous selection of two control rods is prevented by the interconnection arrangement of the select push buttons. With the mode switch in REFUEL, the circuitry prevents the withdrawal of more than one control rod and the movement of the loaded refueling platform over the core with any control rod withdrawn.

7.6.2.1 Safety Objective

The safety objective of the refueling interlocks, in combination with refueling procedures, is to prevent an inadvertent criticality during refueling operations.

7.6.2.2 Safety Design Bases

1. During fuel movements in or over the reactor core, all control rods will be in their fully inserted positions.

2. No more than one control rod will be withdrawn from its fully inserted position at any time when the reactor is in the refuel mode.

7.6.2.3 Safety Evaluation

The refueling interlocks, in combination with core nuclear design and refueling procedures, limit the probability of an inadvertent criticality. The nuclear characteristics of the core ensure that the reactor is subcritical even when the highest worth control rod is fully withdrawn. Refueling procedures are written to avoid situations in which inadvertent criticality is possible. The combination of refueling interlocks for control rods and the refueling platform provides redundant methods of preventing inadvertent criticality even after procedural violations. The interlocks on hoists provide yet another method of avoiding inadvertent criticality.

Table 7.6-5 illustrates the effectiveness of the refueling interlocks. This table considers various operational situations involving rod movement, hoist load conditions, refueling platform

movement and position, and mode switch manipulation. The initial conditions in situations 4 and 5 appear to be in contradiction to the action of refueling interlocks, because the initial conditions indicate that more than one control rod is withdrawn, yet the mode switch is in REFUEL. Such initial conditions are possible if the rods are withdrawn when the mode switch is in STARTUP, and then the mode switch is turned to REFUEL. The scram indicated in situation 17 of Table 7.6-5 is not a result of the refueling interlocks; it is the response of the RPS to downscale neutron monitoring system channels when the mode switch is shifted to RUN. In all cases, proper operation of the refueling interlock is successful in preventing either the operation of loaded refueling equipment over the core whenever any control rod is withdrawn or the withdrawal of any control rod when fuel-loaded refueling equipment is operating over the core. In addition, when the mode switch is in REFUEL, only one rod can be withdrawn; the selection of a second rod initiates a rod block.

7.6.2.4 Inspection and Testing

Before a specific piece of refueling equipment is used during an outage and at regular intervals thereafter, complete functional testing of all applicable interlocks will provide positive indication that the interlocks operate in the situations for which they were designed. By loading each hoist, positioning the refueling platform, and withdrawing control rods, the interlocks can be subjected to valid operational tests.

7.6.3 ROD SEQUENCE CONTROL SYSTEM

The active function of the Rod Sequence Control System (RSCS) has been de-activated as allowed by Amendment 180 to the DAEC Technical Specifications (Reference 7). Consequently, Section 7.6.3.1 through 7.6.3.9 have been deleted. However, as an operator aid, the original “back lighting” feature of the RSCS on the rod select matrix has been retained.

7.6.4 REACTOR VESSEL INSTRUMENTATION

Figures 5.1-1 and 5.4-4 show the numbers, location, and arrangements of the sensors, switches, and sensing equipment used to monitor reactor vessel conditions. Because the reactor vessel sensors used for safety systems, engineered safeguards, and certain control systems have been described and evaluated in other portions of this chapter, only those sensors that are not required for those systems are described in this section.

7.6.4.1 Safety Objective

The safety design objective of the reactor vessel instrumentation is to monitor the key reactor vessel operating parameters during planned operations to ensure that sufficient control of these parameters is possible in order to avoid (1) nuclear system stress in excess of that allowed by applicable industry codes and (2) the existence of any operating conditions not considered by plant safety analyses.

7.6.4.2 Safety Design Basis

Reactor vessel instrumentation is designed to

1. Provide the operator with sufficient indication of reactor core flow rate during planned operations to maintain proper operating conditions.

2. Provide the operator with sufficient indication of reactor vessel water level during planned operations to determine that the core is adequately covered by the coolant inventory.

3. Provide the operator with sufficient indication of reactor vessel pressure during planned operations to maintain proper operating conditions.

4. Provide the operator with sufficient indication of nuclear system leakage during planned operations to avoid nuclear system stress in excess of that allowed by applicable industry codes.

7.6.4.3 Power Generation Objective

The power generation objective of the reactor vessel instrumentation is to monitor and transmit reactor vessel parameter information such that the convenient, efficient, and economical operation of the plant is facilitated.

7.6.4.4 Power Generation Design Bases

Reactor vessel instrumentation is designed to monitor and transmit sufficient reactor vessel parameter information to the operator so that he is continually able to operate the plant conveniently, efficiently, and economically.

7.6.4.5 Reactor Vessel Temperature

Reactor vessel temperature is determined on the basis of reactor coolant temperature. Temperatures that are needed for operation and for compliance with the Technical Specifications operating limits are obtained from one of several sources depending on the operating condition. During normal operation, reactor pressure and/or the inlet temperature of the coolant in the recirculation loops may be used to determine the vessel temperature. Below the operating span of the resistance temperature detectors in the recirculation loop, the vessel pressure is used for determining the temperature. Below 212°F the vessel coolant, and thus the vessel temperature, is reasonably well shown by the reactor water cleanup inlet temperature indicator. These three sources of input are conveniently available from the process computer. Refer to Section 7.7.4 for details of callup methods for this information. During normal operation, vessel thermal transients are limited by operational constraints on parameters other than temperature (Section 7.2).

Reactor vessel thermocouples are provided as a means of observing vessel metal surface temperature behavior in response to vessel coolant temperature changes during startup and power operation testing. Indications based on the thermocouples are not used for controlling the rate of heating or cooling or limiting the vessel thermal stresses. Thermocouples are used as one indication of vessel heatup/cooldown by operators. Selected temperatures are recorded on a multipoint recorder. Thermocouple and temperature recorder specifications are listed in Table 7.6-8.

7.6.4.6 Reactor Vessel Water Level

Reactor vessel water level is measured by comparing the pressure exerted by the actual height of water inside the vessel to the pressure exerted by a constant-height reference column of water outside the vessel. A condensing chamber is used with each reference column to ensure that its water height is maintained constant.

Five reference columns are furnished, as shown on Figure 5.1-1, Sheet 2. One, which is not temperature compensated, provides for level measurement up to a point above the reactor vessel flange, and is used primarily during floodup for reactor vessel head removal. Two redundant columns have auxiliary head chambers and temperature compensation, while two redundant columns are maintained at ambient temperature. Each of these four columns provides level measurement capability up to 218 inches above the top of the active fuel. The two ambient reference columns each receive a constant flow of water from the CRD drive water header at a nominal flow rate of 0.012 gpm. The flow is injected near the bottom of the reference columns and is directed upward through the excess flow check valves to the condensing chambers and ultimately the reactor vessel. This flow prevents the entrainment of non-condensible gases in the water, which might evolve from solution during a depressurization of the reactor vessel, causing an erroneous reactor vessel level indication. This backfill capability was installed to alleviate the concern discussed in NRC Generic Letter 92-04 and Bulletin 93-03.

Instrument lines for redundant reference columns and redundant channels are connected to widely separated nozzles in the reactor vessel. Level measuring instruments are located outside the primary containment on instrument racks in the reactor building. Each instrument line is fitted with one manual isolation valve and one excess flow check valve, both located directly outside the drywell in the reactor building. As indicated on Figure 5.1-1, reactor vessel pressure instruments use some of the instrument lines used by the level instruments.

The following list tells where various level measuring components which initiate protective actions are discussed:

Level Instrumentation	Section Where Discussed
Level switches for initiating scram	Reactor Protection System (7.2)
Level switches for initiating primary containment or NSS shutoff isolation	Primary Containment Isolation and NSS Shutoff Isolation Control System (7.3)
Level switches used for HPCI system, LPCI, core spray system, and automatic depressurization system	Emergency Core Cooling System Control and Instrumentation (7.4)
Level switches used to initiate RCIC and trip RCIC	Reactor Core Isolation Cooling System (5.4.6)

Figure 5.1-1, Sheet 2 contains a chart showing the relative indicated water levels at which various automatic alarms and safety actions are initiated. Each of the actions listed is described and evaluated in the section where the system involved is described.

Some of the level measuring instruments indicate locally, as shown in Figure 5.1-1, Sheet 2. There are numerous indications of reactor vessel water level in the reactor building. Some of the instruments derive their level measurements from the instrument lines in which temperature compensating columns are installed. Thus, temperature compensated, as well as uncompensated, level indications are available in the reactor building.

Ten separate channels, described in the following paragraphs, provide water level information in the Control Room. Six of these channels have overlapping ranges and have been designed and installed to assure that redundant water level information will be available to the plant operators under conditions of postulated accidents, and over the range from below the reactor core to well above the normal water level. One channel is capable of providing level information to a point above the reactor vessel flange. Figure 7.6-30 shows the range of each channel with respect to the reactor core and key points on the reactor vessel.

Four transmitters (LT-4565A, B, C, and D) sense level over the range from 153 inches below the top of the active fuel to 218 inches above. They utilize two uncompensated reference columns. The other sensing lines are connected to sense pressure inside the core shroud. Thus these transmitters sense the differential pressure between the steam plenum at the top of the vessel (plus the reference column) and the bottom of the shroud. They provide the capability for measuring level inside the shroud from below the bottom of the core to 218 inches above the top of the active fuel, under no-flow and natural circulation conditions. Under forced circulation conditions, these instruments are not accurate because the pressure differential measured by the channels is affected by the water flowing in the vessel bottom head.

Two microprocessor based compensation modules (LY4565A/C and LY4565B/D) pressure compensate the four inside shroud level loops (4565A-D). This pressure compensation utilizes reactor pressure signals from two pressure transmitters (PT4599A and PT4599B), one for each divisional compensation module. This pressure compensation corrects for the inaccuracy caused by the difference in the variable leg density from the cold calibrated condition to normal operating and accident pressures and all points in between. Loss of the reactor pressure signals (PT4599A and PT4599B) generates an error signal, lighting an amber indicating light (located between the respective indicators and recorders) which informs the Operations personnel to perform the pressure compensation manually.

These transmitters and their channels are Class 1E and meet the requirements of Regulatory Guide 1.97 for post accident monitoring of reactor vessel water level. Power is supplied from Division I to one transmitter for each reference column, and the other transmitter for each is supplied from Division II. Indication and recording from these transmitters are discussed in section 7.5.1.2.

2015-014 Two instruments (LT-4539 and LT-4540) sense level outside the shroud over the range 8 inches to 218 inches above the top of the active fuel. They utilize the two temperature-compensated reference columns, with the other sensing lines connected outside the shroud. They provide level information within their range under both normal and accident conditions. A level indicator associated with one of these channels is located on a panel of the Alternate Shutdown Capability System. Indication and recording from these channels is also discussed in section 7.5.1.2.

Three additional transmitters (LT-4559, LT-4560 and LT-4561) provide level signals for feedwater control, with a range of 158 to 218 inches above the top of the active fuel. Their channels are discussed in section 7.7.1.3.1. A level recorder that receives signals from two of these channels provides a continuous record of reactor vessel water level in the range of normal operation, and also provides high and low level alarms.

One transmitter (LT-4541), which is intended to provide level data during floodup associated with reactor vessel head removal, provides level data to above the reactor vessel flange. No density compensation is provided. A level indicator for this channel is located on a panel of the Alternate Shutdown Capability System. Indication from this channel is also discussed in section 7.5.1.2.

The large number of reactor vessel water level indicators is sufficient to provide the operator with information with which the adequacy of the coolant inventory to cool the fuel can be determined. In addition, by verifying that reactor vessel water level is not rising to an abnormally high level, the operator is assured that main turbine are not endangered by the possibility of water carried into the steam lines. The approach of abnormal conditions is brought to the operator's attention by audible and visual alarms.

7.6.4.7 Reactor Vessel Coolant Flow and Differential Pressures

Figure 5.4-4 shows the flow instruments, differential-pressure instruments, and recorders provided so that the core coolant flow rates and the hydraulic performance of reactor vessel internals can be determined.

The differential pressure between the throat of each of the jet pumps and the core inlet plenum is measured and indicated in the main control room. Four jet pumps, two associated with each recirculation loop, are specially calibrated. They are provided with special pressure taps in the diffuser sections. The differential pressure measured between the special taps and the throat allows precise flow calibration using jet pump prototype test performance data. The flow rates through the remaining jet pumps are calculated from the flows shown by the calibrated jet pumps. The flow rates through the jet pumps associated with each recirculation loop are summed to provide control room indication of the core flow rate associated with each recirculation loop. The total flows for both recirculation loops are again summed to provide a recorded control room indication of the total flow through the core.

Total core flow indication derived from the measured flow in the jet pumps is provided during the operation of a single recirculation loop by subtracting the reverse flow signal from the forward flow signal of the active jet pumps. This function is provided automatically any time a single recirculation pump is in operation (see Figure 7.3-6, Sheet 3).

A differential-pressure transmitter and indicator are provided to measure the pressure difference between the reactor vessel above the core assembly and the core inlet plenum. This indication can be used to determine the overall hydraulic performance of the jet pump group and to check the total core flow rate. These indications are available in the main control room.

A differential-pressure transmitter is provided to indicate pressure drop by measuring the pressure difference between core inlet plenum and the space just above the core support assembly. The line used to determine the pressure in the core inlet plenum is the same line provided for the standby liquid control system. A separate line is provided for the pressure measurement above the core support assembly. The differential pressure is both indicated and recorded in the main control room.

This instrumentation permits the determination of total core flow in two ways. The first method is the readout of the summed flow measurements from all the jet pumps. The second method includes the use of jet pump prototype performance data, the jet pump differential pressures, and the differential pressure between the reactor vessel annulus and the core inlet plenum. A temporary correlation can also be made to define core flow as a function of reactor operating power level and the readout of the pressure difference between the reactor vessel annulus and the core inlet plenum. This correlation is of a temporary nature because it will change with a fixed core arrangement over a period of time as a result of crud buildup on the fuel. The control room flow rate readouts of the specially calibrated jet pumps can be used to cross check the flow rate readouts of all the other jet pumps.

All instrument lines connected directly to the reactor vessel and leading to locations outside the drywell are provided with one restriction orifice, one manual isolation valve, and one excess flow check valve. The orifice, located inside the drywell, is positioned as close to the reactor vessel as possible. The manual valve and the excess flow check valve are located immediately outside the drywell and as close to it as possible. All of the flow, pressure, and differential-pressure instruments are located outside the primary containment.

7.6.4.8 Reactor Vessel Internal Pressure

Reactor vessel internal pressure is detected by pressure sensors, indicators, and transmitters from the same instrument lines used for reactor vessel water level measurements. Two pressure indicators that sense pressure from different, separated instrument lines provide pressure indications in the reactor building. Three reactor vessel pressure indications are provided in the main control room. Two of these come from separate pressure transmitters used in the feedwater control system. Reactor vessel pressure is continuously recorded in the main control room. The recorder receives a pressure signal from one of the feedwater control system pressure transmitters.

The following list shows where reactor vessel pressure measuring instruments used for the automatic control of equipment or systems are discussed:

Pressure Instrumentation	Section Where Discussed
Pressure switches used to initiate a scram	Reactor Protection System (7.2)
Pressure switches used to bypass main steam line isolation valve closure scram	Reactor Protection System (7.2)
Pressure switches used for HPCI, core spray, and LPCI	Emergency Core Cooling System Control and Instrumentation (7.3.2)
Pressure transmitters and recorders used for feedwater control	Feedwater Control System (7.7.1)
Differential-pressure switches measuring differential pressure between reactor vessel and jet pump riser pipes	Emergency Core Cooling System Control and Instrumentation (7.3.2)
Differential-pressure switches measuring differential pressure between the inside of core spray sparger pipes and core inlet above the core support assembly	Emergency Core Cooling System Control and Instrumentation (7.3.2)

7.6.4.9 Reactor Vessel Top Head Flange Leak Detection

A connection is provided on the reactor vessel flange into the annulus between the two metallic seal rings used to seal the reactor vessel and top head flanges. This connection permits the detection of leakage from the inside of the reactor vessel past the inner seal ring. The arrangement is shown in Figure 5.1-1, Sheet 1. A pressure switch is provided to actuate the alarm in the main control room as pressure in the leakage collection piping becomes abnormally high. The pressure switch is located inside the primary containment. The specifications for the pressure switch are given in Table 7.6-8. The valves connecting the pressure switch to the annulus are normally locked in the open position.

7.6.4.10 Safety Evaluation

The reactor vessel instrumentation is designed to provide sufficient continuous indication of key reactor vessel operating parameters during planned operations such that the operator can efficiently monitor these parameters and anticipate any approach to operating conditions that could lead to any unacceptable safety results.

The redundancy of all indicators provided ensures that the possibility that all instrumentation could be lost simultaneously is so remote as to be negligible. In addition, sensors providing safety signals to the RPS and engineered safeguards systems for scram and isolation functions are separate from these indicator sensors so that a loss of indication does not directly obviate protection against accidents and transients.

7.6.4.11 Inspection and Testing

Pressure, differential pressure, water level, and flow instruments are located in the reactor building and are piped so that calibration and test signals can be applied during reactor operation.

7.6.5 SAFETY/RELIEF VALVE LOW-LOW SET LOGIC

The low-low set system is described in Section 5.4.13. The low-low logic is armed when one of the safety/relief valves has opened and the reactor pressure vessel pressure is above the scram setpoint of 1055 psig (nominal). When armed, the low-low set logic will open the associated low-low set valves at a pressure below the self-actuated relief setpoint and hold the valves open to a pressure below the self-actuated close setpoint. Hence, the amount of reactor depressurization (blowdown) before reclosing the low-low set safety/relief valves is increased when compared to the self-actuated relief.

The low-low set system is designed to provide inputs to the opening solenoid valves of two safety/relief valves. The setpoints are armed by a safety/relief valve opening and scram pressure signal. The safety/relief valve monitors interface into the low-low set system to provide indication of a safety/relief valve opening. Figure 7.6-31 illustrates functionally typical low-low

set channels. System logic precludes any single failure of an active mechanical or an electrical component (active or passive) from preventing actuation or sticking-open of both low-low set safety/relief valves. System logic is testable during normal operation.

The relief valve (nominal) settings for the low-low set functions are as follows:
Low (one valve), open at 1030 psig; close at 910 psig.

High (one valve), open at 1035 psig; close at 915 psig.

REFERENCES FOR SECTION 7.6

1. General Electric Company, BWR Systems Department, Operating and Maintenance Instructions, Flux Probing Monitor, GEK-73696, October 1979.

1a. General Electric Company, Average Power Range Monitor, Rod Block Monitor and Technical Specification Improvement - (ARTS) Program for the Duane Arnold Energy Center, NEDC-30813-P, December 1984.

References 2 through 6 deleted.

7. C. Y. Shiraki to L. Liu, Amendment 180 to Facility Operating License No. DPR-49, March 11, 1992.

Table 7.6-1

SRM TRIPS AND ALARMS

Trip Function	Nominal Setpoint	Trip Action
SRM upscale (Hi) alarm	$\leq 10^5$ c/s	Rod block, amber light, annunicator.
Detector retraction permissive (SRM downscale)	10^2 c/s	Annuciator, green light. Rod block when below preset limit with IRM range switches on first two ranges and detector not in full-in position.
SRM period	50 sec	Annuciator, amber light.
SRM bypassed	Manual switch	White light.
SRM downscale	≥ 3 c/s	Annunciator, white light, rod block.
SRM upscale (Hi-Hi) trip	$5x10^5$ c/s	Red light, scram in initial loading connection.
SRM inoperative	- -	Annuciator, amber light rod block.

Note: Rod block, annuciator, and lights operational in REFUEL and STARTUP modes.
c/s = counts/sec

Table 7.6-2

IRM TRIPS AND ALARMS

Trip Function	Nominal Setpoint	Trip Action
IRM upscale (Hi-Hi) trip	120/125	Scram, annunciator, red lights.
IRM upscale (Hi) alarm	≤ 108/125[1]	Rod block , annunciator, amber light.
IRM downscale	≥ 5/125	Rod block (except on most sensitive scale), annunciator, white light.
IRM bypassed	Manual switch	White light.
IRM inoperative	- -	Scram, annunicator, red light.

Note: Scram, rod block, annuciator, and lights operational in REFUEL and STARTUP modes.

[1] Represents the maximum setting. The setpoint may be set lower for better operational control.

Table 7.6-3

LPRM TRIPS AND ALARMS

	Trip Function	Setpoint	Trip Action
2015-002	LPRM downscale	3/125	White light and annunciator
2015-002	LPRM upscale	100/125	Amber light and annunciator
2015-002	LPRM bypass	Manual switch	White light and APRM averaging compensation

Table 7.6-4

APRM TRIPS AND ALARMS

Trip Function	Adjustable Range	Nominal Setpoint	Action
APRM downscale (RUN mode)	2% to full scale	≥ 5% rated thermal power	Rod block, annunciator, white light.
APRM upscale (Hi) alarm (RUN mode)	Varied with recirculation drive flow (W_d), intercept, and slope adjustable.	Two Loop: ≤ 0.55 W_d 108% rated thermal power (maximum) + 53.6% Single Loop: ≤ 0.55 W_d + 46.5%	Rod block, annunciator, amber light.
APRM upscale (Hi-Hi) trip (RUN mode)	2% to full scale varied with recirculation drive flow (W_d) intercept and slope adjustable.	0.55 W_d + 65.4% 120% rated thermal power (maximum) (0.55 W_d + 58.2% for SLO)	Scram, annunciator, red light.
APRM inoperative	Calibrate switch or too few inputs	Not in operate mode or if less than 13 LRPM inputs for APRMs E, F, or 9 for APRMs A, B, C, D	Scram, annunciator, red light, rod block.
APRM bypass	Manual switch	- -	White light
APRM upscale (Hi) alarm (not in RUN mode)	Up to 27% power (Startup)	≤ 12% rated thermal power	Rod block, annunciator, amber light.
APRM upscale (Hi-Hi) trip (not in RUN mode).	Up to 30% power	≤15% rated thermal power	Scram, annunciator, red light.

Table 7.6-5

REFUELING INTERLOCK EFFECTIVENESS

Situation	Refueling Platform Position	Refueling TMH	Platform FMH	Hoists FG	Control Rods	Mode Switch	Attempt	Result
1.	Not near core	UL	UL	UL	All rods in	Refuel	Move refueling platform over core	No restrictions
2.	Not near core	UL	UL	UL	All rods in	Refuel	Withdraw rods	Cannot withdraw more than one rod
3.	Not near core	UL	UL	UL	One rod withdrawn	Refuel	Move refueling platform over core	No restrictions
4.	Not near core	Any hoist loaded or not fully up.		FG	One or more rod withdrawn	Refuel	Move refueling platform over core	Platform stopped before over core
4.a	Not near core	UL	UL	UL	One or more rod withdrawn	Refuel	Move refueling platform over core	Platform stopped before over core and raise power to hoist interrupted
4.b	Not near core	UL	L	UL	One or more rod withdrawn	Refuel	Move refueling platform over core	Platform stopped before over core and raise power to hoist interrupted

Key: TMH = trolley-mounted hoist
FMH = frame-mounted hoist
FG = fuel grapple
UL = unloaded
L = fuel loaded

Table 7.6-5

REFUELING INTERLOCK EFFECTIVENESS

Situation	Refueling Platform Position	Refueling TMH	Platform FMH	Hoists FG	Control Rods	Mode Switch	Attempt	Result
5.	Not near core	UL	UL	UL	More than one rod withdrawn	Refuel	Move refueling platform over core	Platform stopped before over core
6.	Over core	UL	UL	UL	All rods in	Refuel	Withdraw rods	Cannot withdraw more than one rod
7.	Over core	Any hoist loaded or FG not fully up			All rods in	Refuel	Withdraw rods	Rod block
8.	Not near core	UL	UL	UL	All rods in	Refuel	Withdraw rods	Rod block
9.	Not near core	UL	UL	UL	All rods in	Refuel	Operate service platform hoist	No restrictions
10.	Not near core	UL	UL	UL	One rod withdrawn	Refuel	Operate service platform hoist	Hoist operation prevented
11.	Not near core	UL	UL	UL	All rods in	Startup	Move refueling platform over core	Platform stopped before over core
12.	Not near core	UL	UL	UL	All rods in	Startup	Operate service platform hoist	No restrictions

Key: TMH = trolley-mounted hoist
FMH = frame-mounted hoist
FG = fuel grapple
UL = unloaded
L = fuel loaded

Table 7.6-5

REFUELING INTERLOCK EFFECTIVENESS

Situation	Refueling Platform Position	Refueling TMH	Platform FMH	Hoists FG	Control Rods	Mode Switch	Attempt	Result
13.	Not near core	UL	UL	UL	One rod withdrawn	Startup	Operate service platform hoist	Hoist operation prevented
14.	Not near core	UL	UL	UL	All rods in	Startup	Withdraw rods	Rod block
15.	Not near core	UL	UL	UL	All rods in	Startup	Withdraw rods	No restrictions
16.	Over core	UL	UL	UL	All rods in	Startup	Withdraw rods	Rod block
17.	Any	Any condition			Any condition, reactor not at power	Startup	Turn mode switch to run	Scram

Key: TMH = trolley-mounted hoist
FMH = frame-mounted hoist
FG = fuel grapple
UL = unloaded
L = fuel loaded

Table 7.6-6

Deleted

Table 7.6-7

Deleted

Table 7.6-8

REACTOR VESSEL INSTRUMENTATION SPECIFICATIONS[a]

Measured Variable	Sensor/ Instrument Type	Normal Range	Accuracy[b]	Trip Setting
Reactor vessel surface temperature	Thermocouple	0-600°F	ANSI C96.1	- -
Reactor vessel top head surface temperature	Thermocouple	0-600°F	ANSI C96.1	- -
Reactor vessel top head flange surface temperature	Thermocouple	0-600°F	ANSI C96.1	- -
Reactor vessel surface temperature	Temperature recorder	0-600°F	ANSI C96.1	- -
Reactor vessel flange and vessel wall temperature	Temperature recorder	0-600°F	ANSI C96.1	- -

[a] Other instruments measuring reactor vessel variables are discussed in sections of the Safety Analysis Report where the systems using the instruments are described.
[b] Accuracy is in percent of full scale.

Table 7.6-8

REACTOR VESSEL INSTRUMENTATION SPECIFICATIONS[a]

Measured Variable	Sensor/ Instrument Type	Normal Range	Accuracy[b]	Trip Setting
Specially Calibrated Jet Pump Flow Rate	Flow Transmitter	0-4.6 MLB/HR	±0.5 %	- -
Specially Calibrated Jet Pump Flow Rate	Flow Recorder	0-4.6 MLB/HR	±2.0 %	- -
Jet Pump Differential Pressure	Flow Transmitter	0-30 PSID	±0.5 %	- -
Jet Pump Differential Pressure	Flow Recorder	0-30 PSID	±2.0 %	- -
Jet Pump Flow Rate (Loops)	Flow Recorder	0-36.8 MLB/HR	±2.0%	- -
Total Core Flow	Flow/Differential Pressure Recorder	0-60 MLB/HR	±2.0 %	- -
Core Plate D/P	Differential Pressure Transmitter	0-30 PSID	±0.5 %	- -
Core Plate D/P	Flow/Differential Pressure Recorder	0-30 PSID	±2.0%	- -
Reactor Vessel Downcomer to Core Inlet Plenum Differential Pressure	Differential Pressure Transmitter	0-60 PSID	±0.5 %	- -
Reactor Vessel Downcomer to Core Inlet Plenum Differential Pressure	Flow Recorder	0-60 PSID	±2.0 %	- -

[a] Other instruments measuring reactor vessel variables are discussed in sections of the Safety Analysis Report where the systems using the instruments are described.
[b]Accuracy is in percent full scale. Accuracy listed is minimum required.

Table 7.6-8 Sheet 3 of 3

REACTOR VESSEL INSTRUMENTATION SPECIFICATIONS[a]

Measured Variable	Sensor/ Instrument Type	Normal Range	Accuracy[b]	Trip Setting
Reactor vessel pressure	Pressure indicators	0-1500 psig	±2%	- -
Reactor vessel flange leak detection piping internal pressure	Pressure switch	0-1500 psig	±2%	600 psi

[a] Other instruments measuring reactor vessel variables are discussed in sections of the Safety Analysis Report where the systems using the instruments are described.
[b] Accuracy is in percent of full scale.

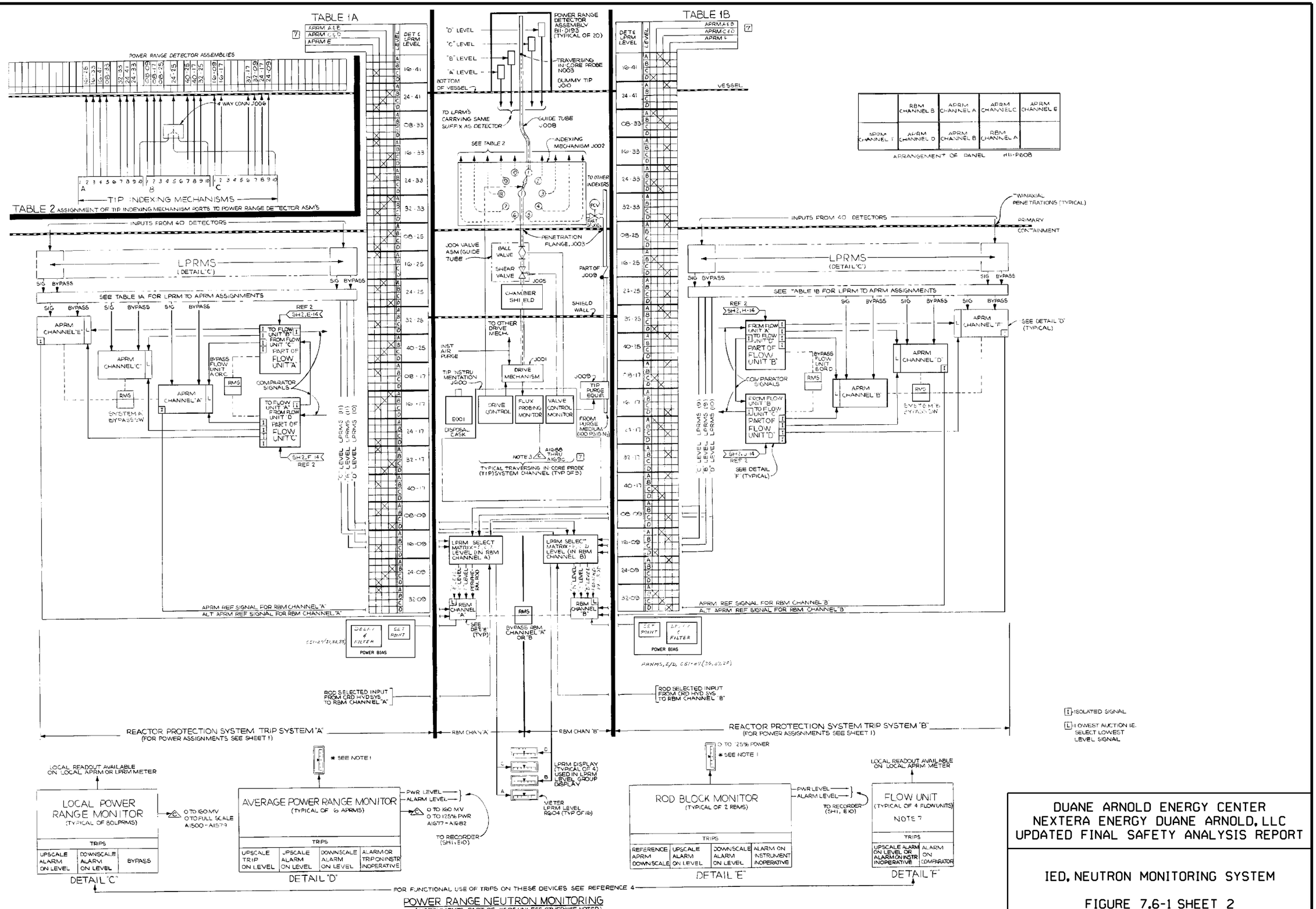

POWER RANGE NEUTRON MONITORING
(INSTRUMENTS PART OF K605 UNLESS OTHERWISE NOTED)

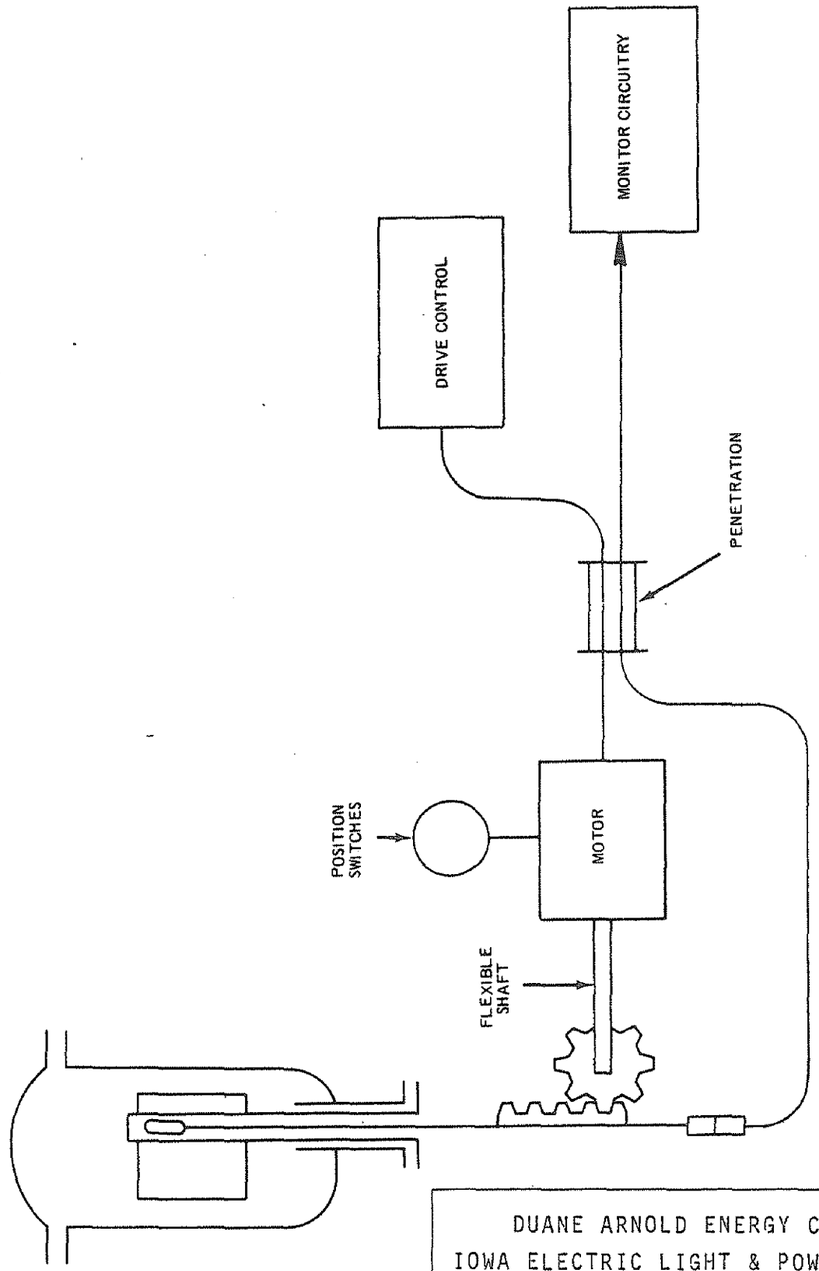

DUANE ARNOLD ENERGY CENTER
IOWA ELECTRIC LIGHT & POWER COMPANY
UPDATED FINAL SAFETY ANALYSIS REPORT

Detector Drive System Schematic

Figure 7.6-3

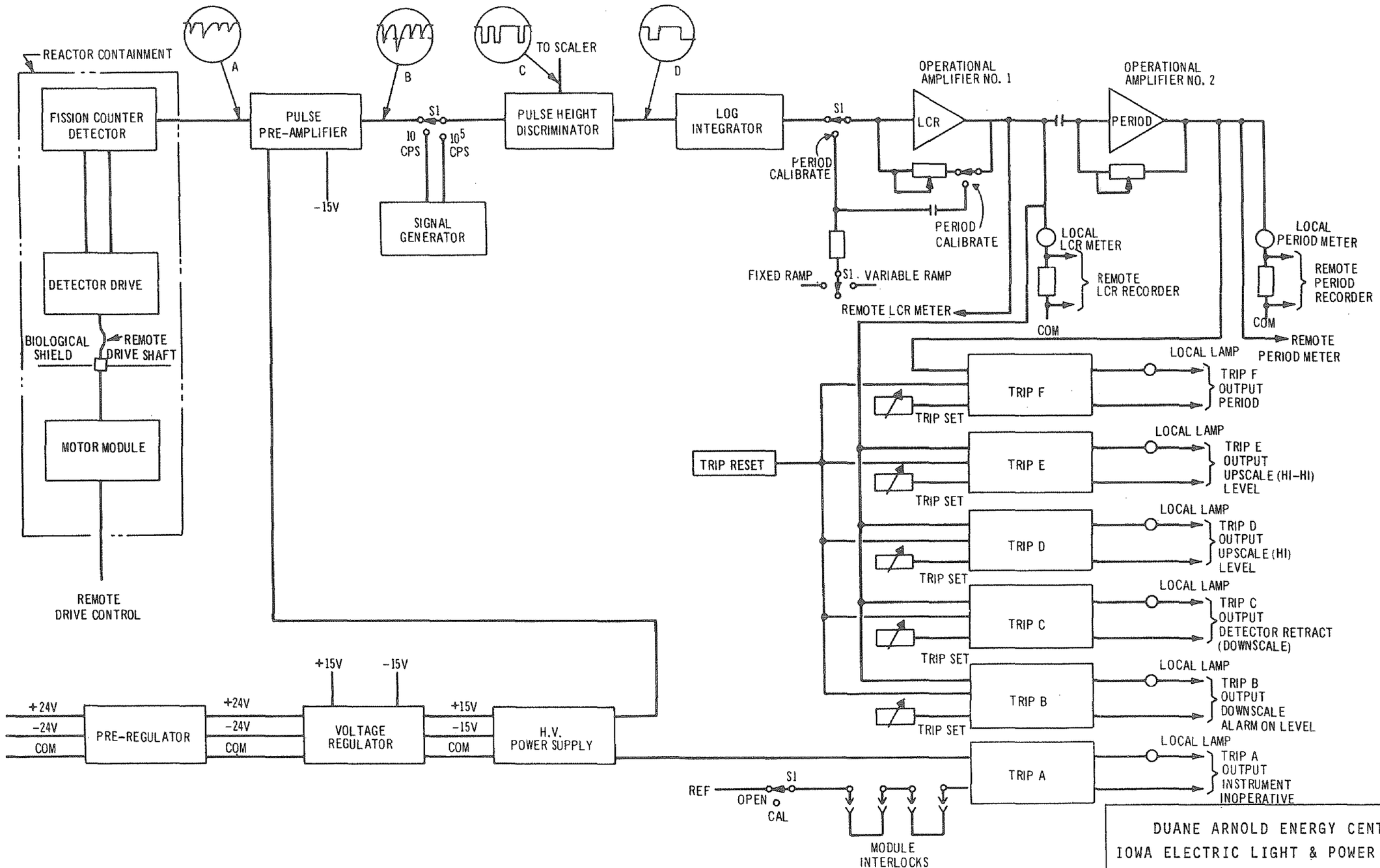

DUANE ARNOLD ENERGY CENTER
IOWA ELECTRIC LIGHT & POWER COMPANY
UPDATED FINAL SAFETY ANALYSIS REPORT

Functional Block Diagram of SRM Channel

Figure 7.6-4

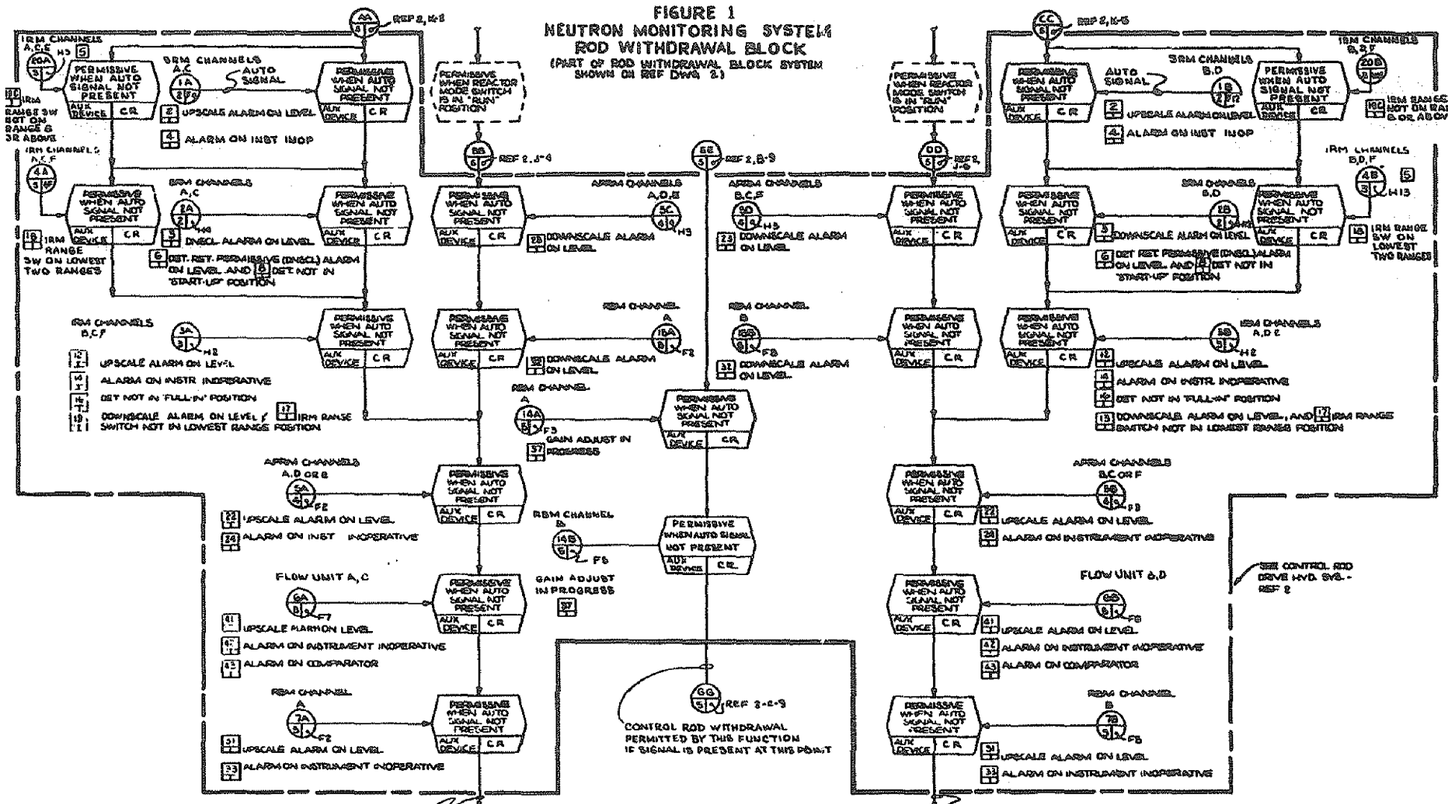

NOTES:
1. INPUTS TO COMPUTER ARE ISOLATED CLOSE TO ALARM CONTACTS.
2. SEE SHEET 7.
3. SEE SHEET 7.
4. THE ENTIRE NEUTRON MONITORING SYSTEM IS A FULLY AUTOMATIC SYSTEM EXCEPT FOR MANUAL OPERATED SWITCHES.
5. ALL EQUIPMENT & INSTRUMENTS ARE PREFIXED BY C51 UNLESS OTHERWISE NOTED.
6. CHANNELS A,C,E ARE FOR TRIP SYSTEM A.
   CHANNELS B,D,F ARE FOR TRIP SYSTEM B.
7. APRM DOWNSCALE TRIP JUMPERED PER DWG-M447-61-M447-66.

LEGEND
IRM — INTERMEDIATE RANGE MONITOR
RBM — ROD BLOCK MONITOR
APRM — AVERAGE POWER RANGE MONITOR
SRM — SOURCE RANGE MONITOR
LPRM — LOCAL POWER RANGE MONITOR
TIP — TRAVERSING IN-CORE PROBE
MOC — MULTIPLE OUTPUT CONTROLLER

REFERENCE DOCUMENTS:
NOTE: SYSTEM SELECTION OPTIONS ARE INDICATED BY MULTIPLE MPL ITEM NUMBERS

	MPL ITEM NO
1 NEUTRON MONITORING SYSTEM ISD	C51-1010
2 CONTROL ROD DRIVE HYD SYS FCD	C11-C12-1020
3 NUCLEAR BOILER SYS FCD	B21-1020
4 REACTOR PROTECTION SYS ISD	C71-C72-1010
5 PROCESS COMPUTER SYSTEM INPUT/OUTPUT REQUIREMENTS DESIGN BASIS	C61-C62-1010
6 LOGIC SYMBOLS	E2B-A175A
7 NEUTRON MONITORING SYS. ARRANGEMENT	C51-E010

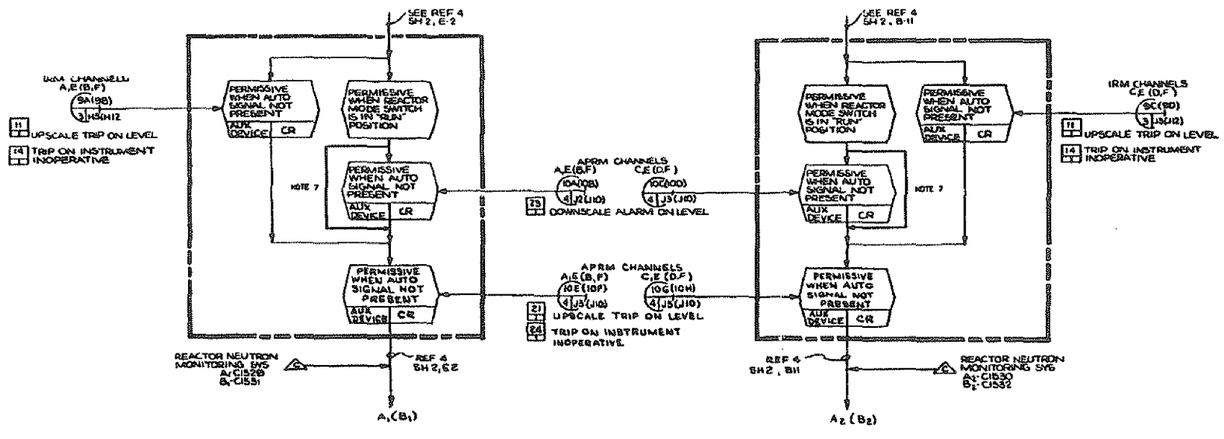

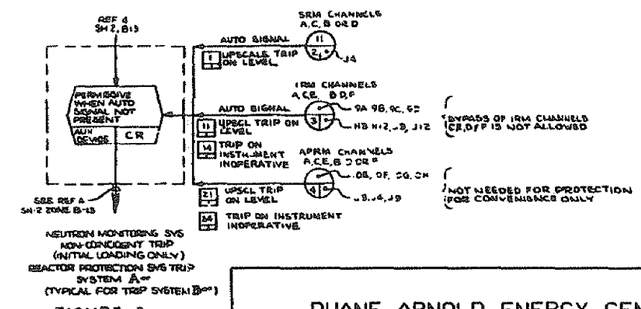

FIGURE 3

DUANE ARNOLD ENERGY CENTER
IES UTILITIES
UPDATED FINAL SAFETY ANALYSIS REPORT

NEUTRON MONITORING SYSTEM-FCD

FIGURE 7.6-5

REVISION 15 - 5/00

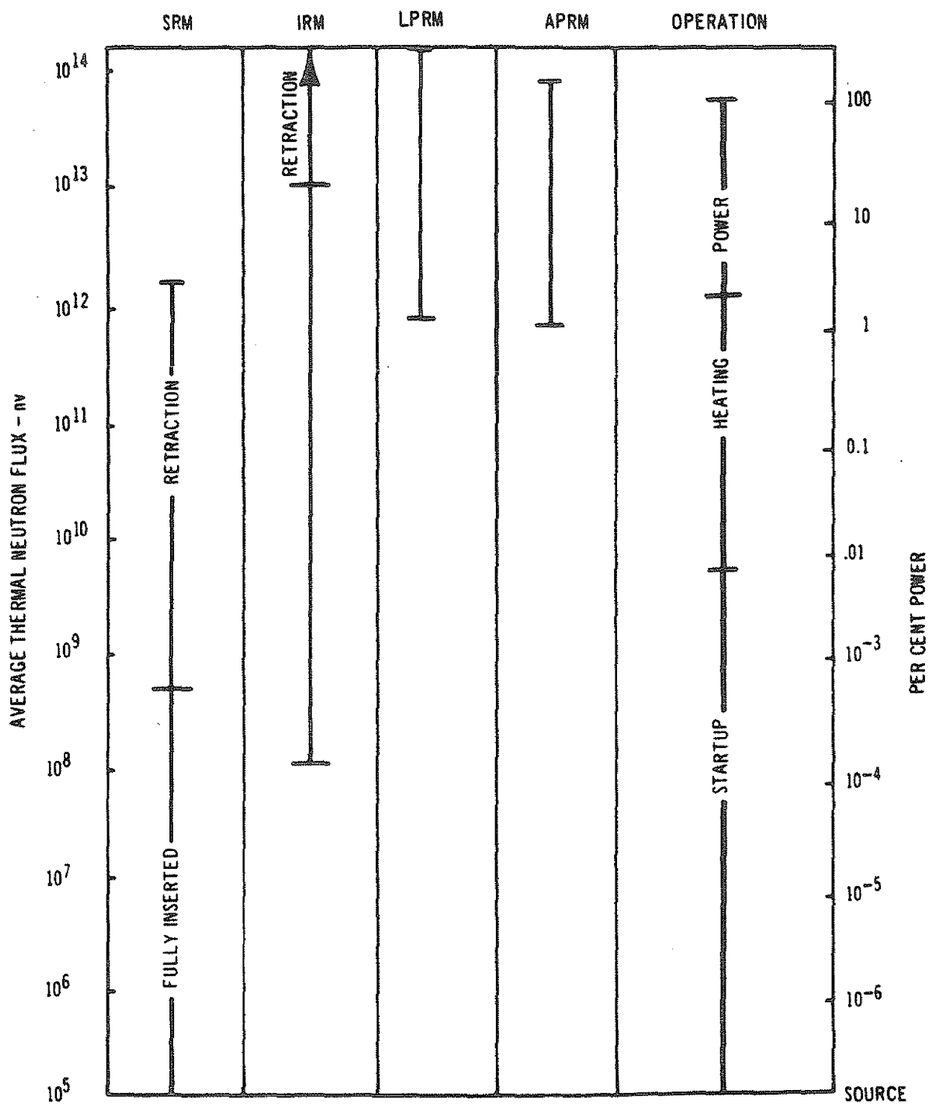

DUANE ARNOLD ENERGY CENTER
IOWA ELECTRIC LIGHT & POWER COMPANY
UPDATED FINAL SAFETY ANALYSIS REPORT

Ranges of Neutron Monitoring System

Figure 7.6-6

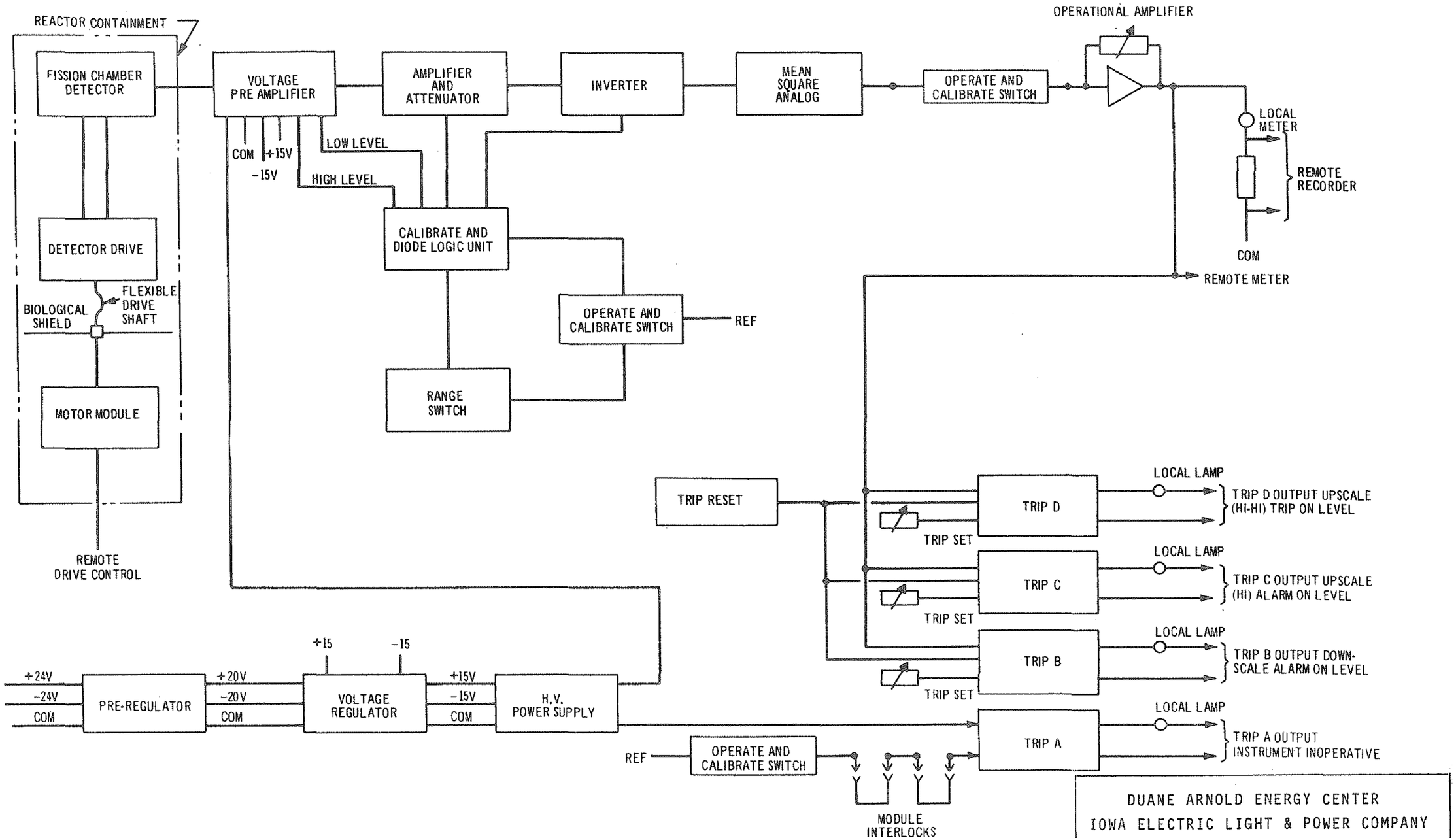

DUANE ARNOLD ENERGY CENTER
IOWA ELECTRIC LIGHT & POWER COMPANY
UPDATED FINAL SAFETY ANALYSIS REPORT

Functional Block Diagram of IRM Channel

Figure 7.6-7

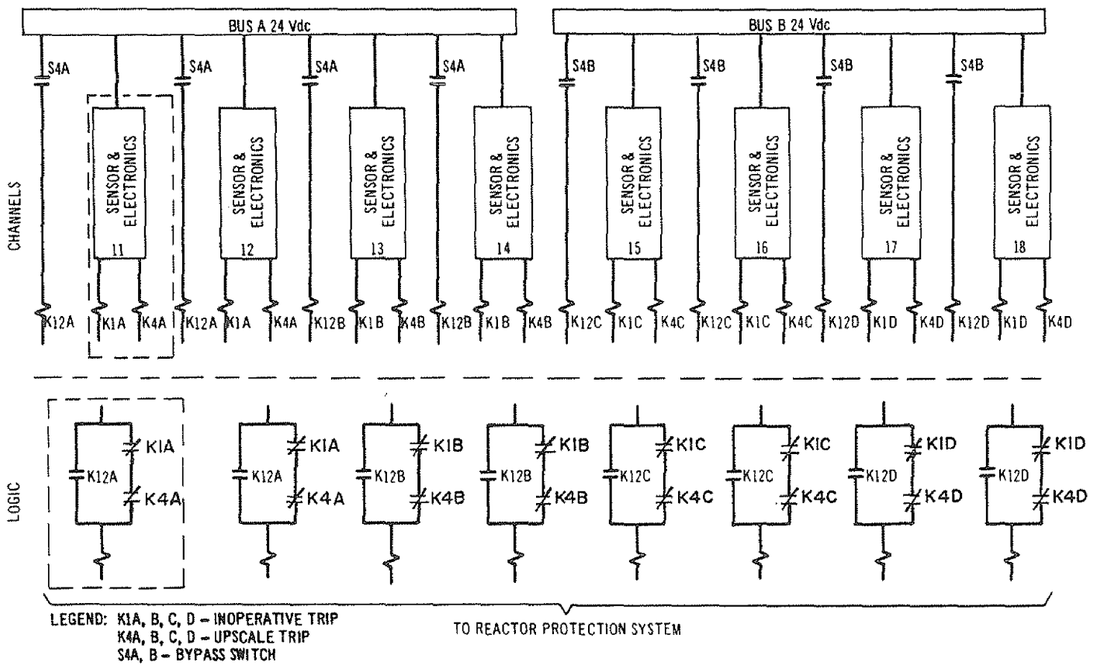

NOTE: TRIP CONTACTS ARE SHOWN IN NORMAL OPERATION POSITION; BYPASS SWITCH CONTACTS SHOWN IN UNBYPASSED POSITION

DUANE ARNOLD ENERGY CENTER
IOWA ELECTRIC LIGHT & POWER COMPANY
UPDATED FINAL SAFETY ANALYSIS REPORT

Typical IRM Circuit Arrangement
for Reactor Protection System Input

Figure 7.6-8

[redacted]

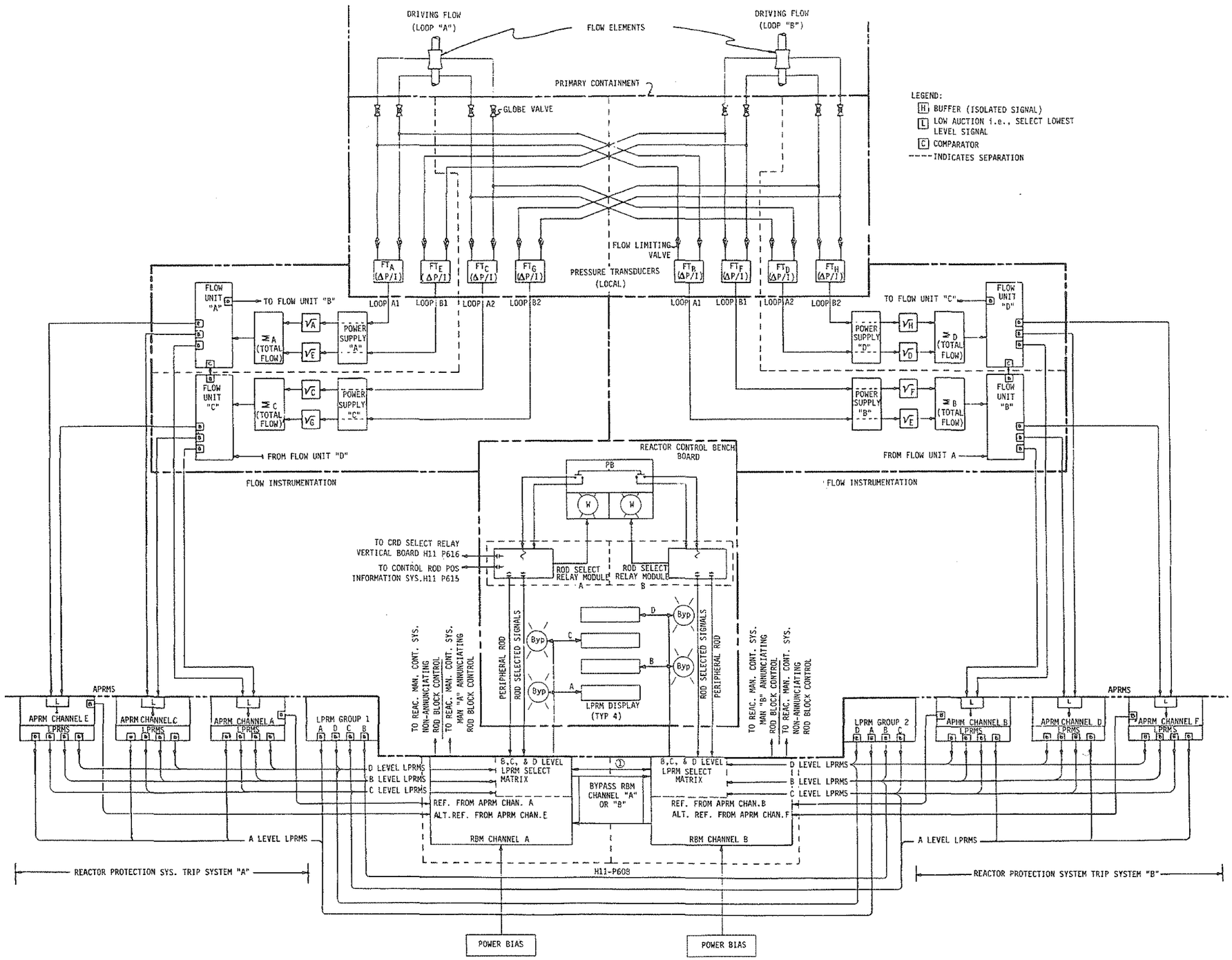

1. ALL B,C AND D LEVEL LPRMS ARE SHARED BY BOTH RBM CHANNEL A AND CHANNEL B SELECT MATRIX

DUANE ARNOLD ENERGY CENTER
IOWA ELECTRIC LIGHT & POWER COMPANY
UPDATED FINAL SAFETY ANALYSIS REPORT

Flow and RBM Instrumentation
Figure 7.6-12

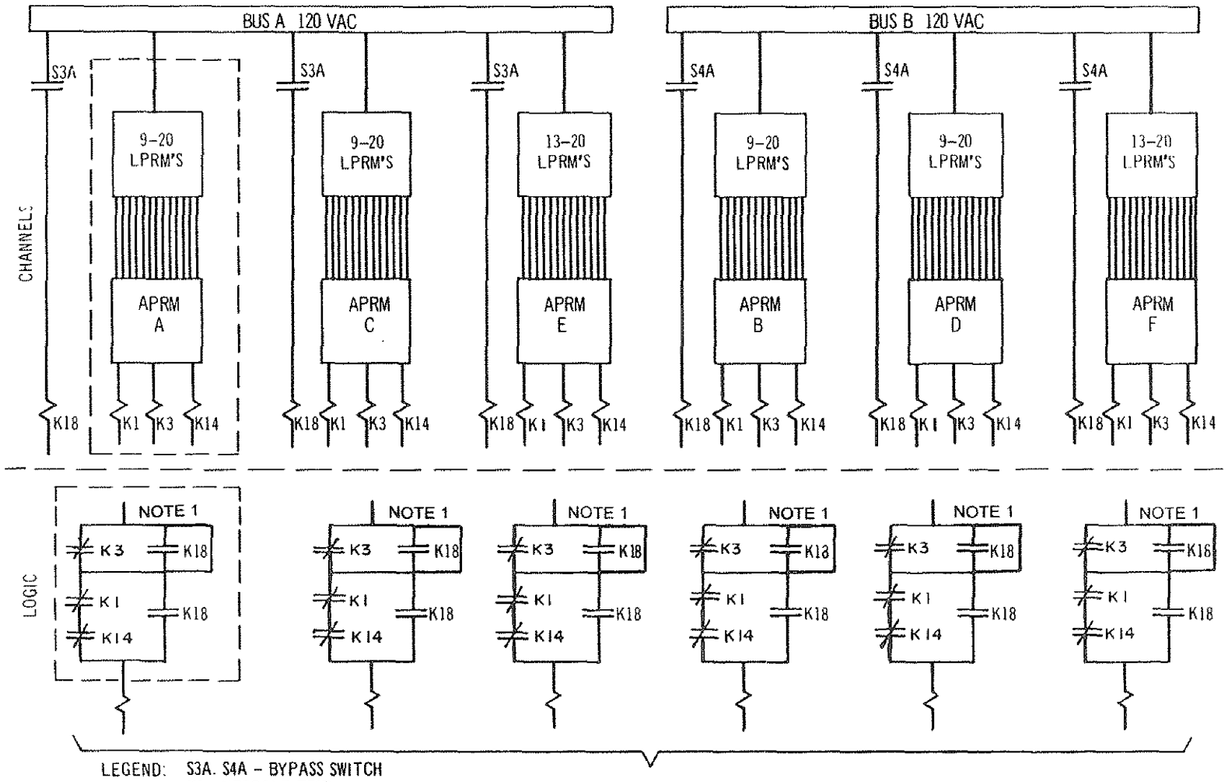

LEGEND: S3A. S4A - BYPASS SWITCH
K1 - UPSCALE TRIP
K3 - DOWNSCALE TRIP
K14 - INOPERATIVE TRIP

TO REACTOR PROTECTION SYSTEM

TRIP CONTACTS ARE SHOWN IN NORMAL OPERATION POSITION, BYPASS SWITCHES SHOWN IN UNBYPASSED POSITION

NOTE:
1. APRM DOWNSCALE TRIP CONTACT JUMPERED.

DUANE ARNOLD ENERGY CENTER
IES UTILITIES, INC.
UPDATED FINAL SAFETY ANALYSIS REPORT
TYPICAL APRM CIRCUIT ARRANGEMENT FOR REACTOR PROTECTION SYSTEM INPUT
Figure 7.6-13

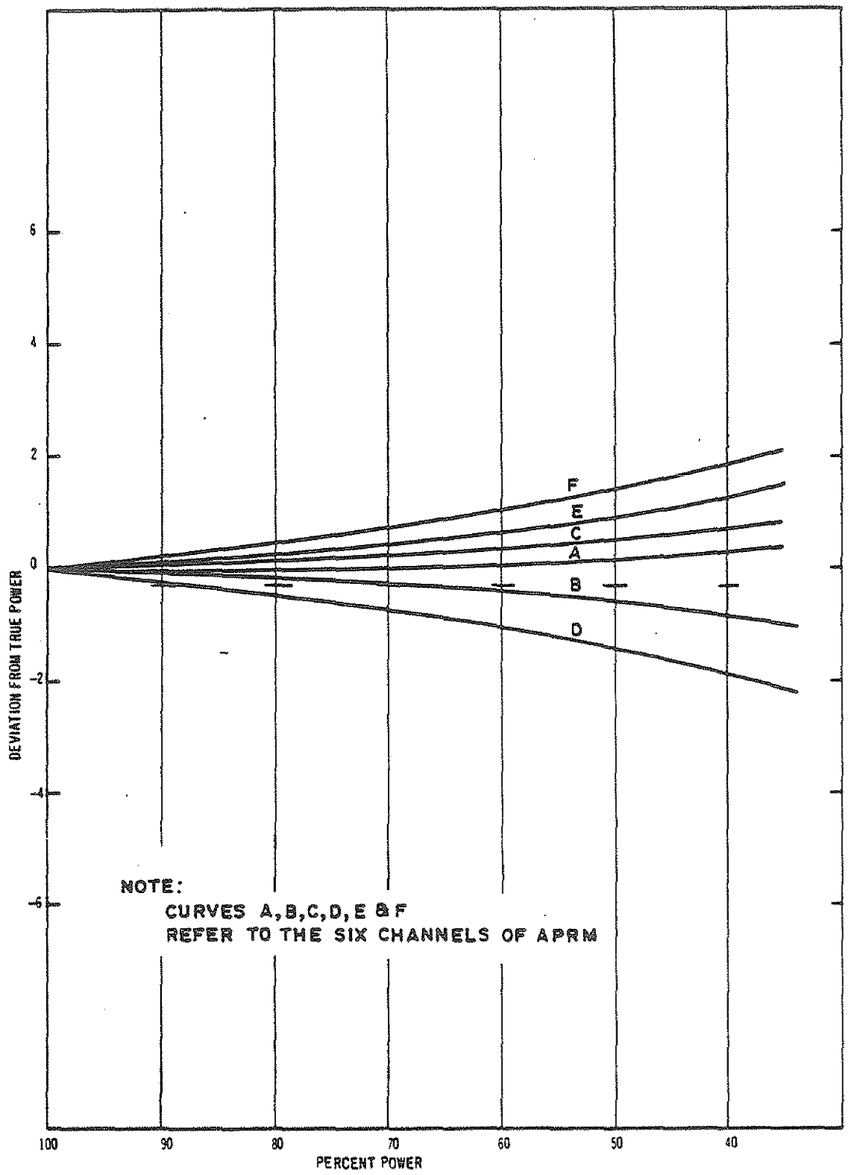

DUANE ARNOLD ENERGY CENTER
IOWA ELECTRIC LIGHT & POWER COMPANY
UPDATED FINAL SAFETY ANALYSIS REPORT

APRM Tracking Reduction in Power
by Flow Control

Figure 7.6-14

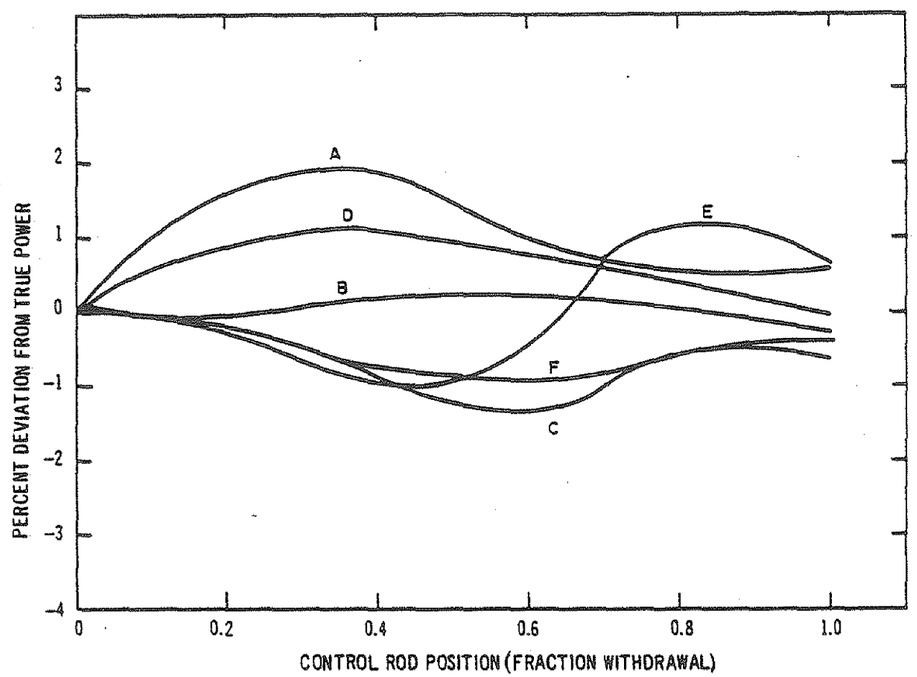

NOTE:
CURVES A,B,C,D,E,& F
REFER TO THE SIX CHANNELS OF APRM.

DUANE ARNOLD ENERGY CENTER
IOWA ELECTRIC LIGHT & POWER COMPANY
UPDATED FINAL SAFETY ANALYSIS REPORT

APRM Tracking With On-Limits
Control Rod Withdrawal

Figure 7.6-15

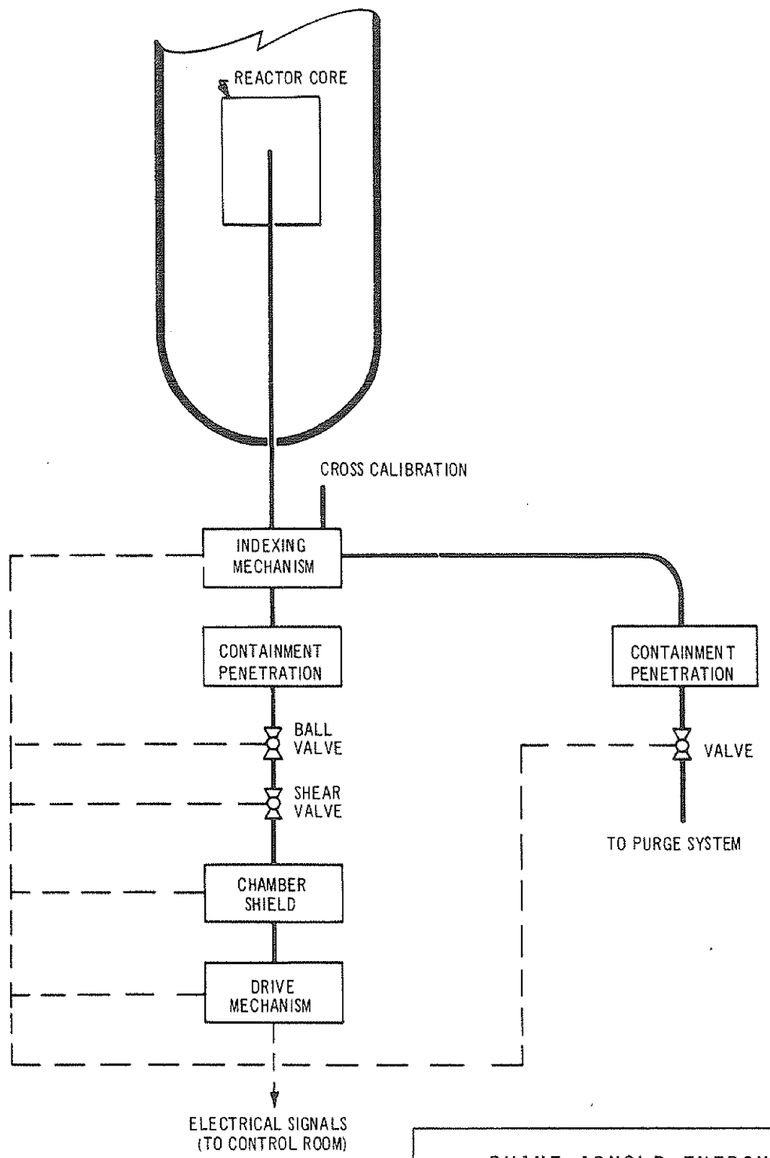

DUANE ARNOLD ENERGY CENTER
IOWA ELECTRIC LIGHT & POWER COMPANY
UPDATED FINAL SAFETY ANALYSIS REPORT

Traversing Incore Probe Subsystem Block Diagram

Figure 7.6-18

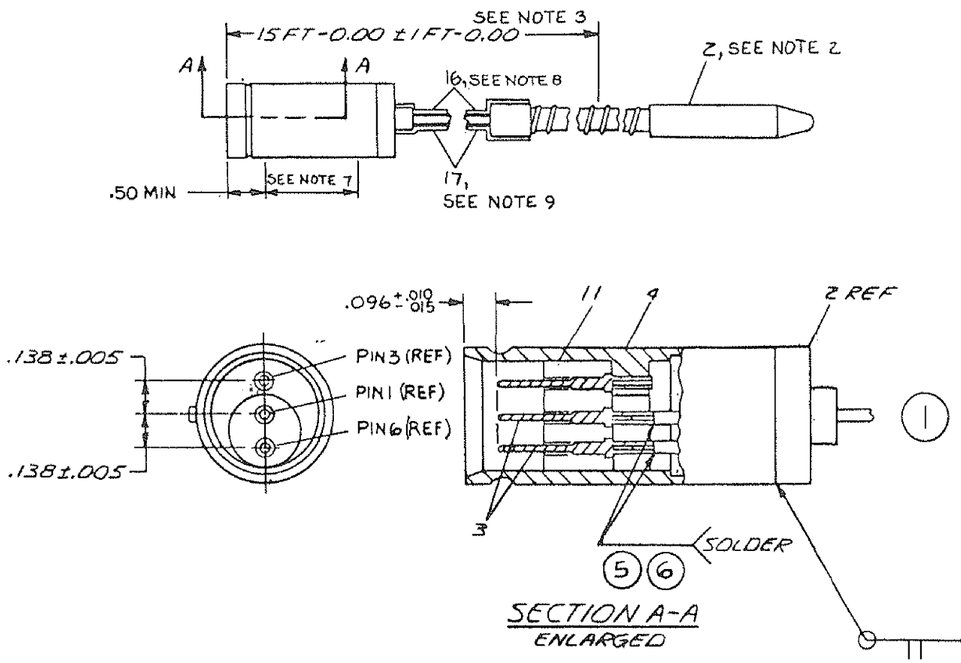

NOTES:

1. BEFORE ASSEMBLY CLEAN ITEM 3 AND ITEM 4 PER 272A6904.
2. APPLY LUBRICANT, PER ITEM 7.
3. NO LUBRICANT COATING.
4. ASSEMBLY SHALL CONFORM TO THE REQUIREMENTS OF 22AS913.
5. ASSEMBLY. UP TO CONNECTOR, SHALL PASS FREELY THROUGH A TEST FIXTURE .258 +.000 -.001 DIA X 4.00 ± .02 LONG.
6. URANIUM-235 CONTAMINATION WITHIN DETECTOR ELEMENT SHALL NOT EXCEED 1.8×10^{-8} GRAMS.
7. ELECTROLYTICALLY ETCH ITEM 10 IN AREA SHOWN USING MATERIALS PER P50YP107.
8. SLIT ITEM 16 LENGTHWISE AND FIT OVER CABLE OF ITEM 2.
9. SHRINK ITEM 17 IN PLACE AS SHOWN.

DUANE ARNOLD ENERGY CENTER
IOWA ELECTRIC LIGHT & POWER COMPANY
UPDATED FINAL SAFETY ANALYSIS REPORT

Traversing Incore Probe Assembly

Figure 7.6-19

[redacted]

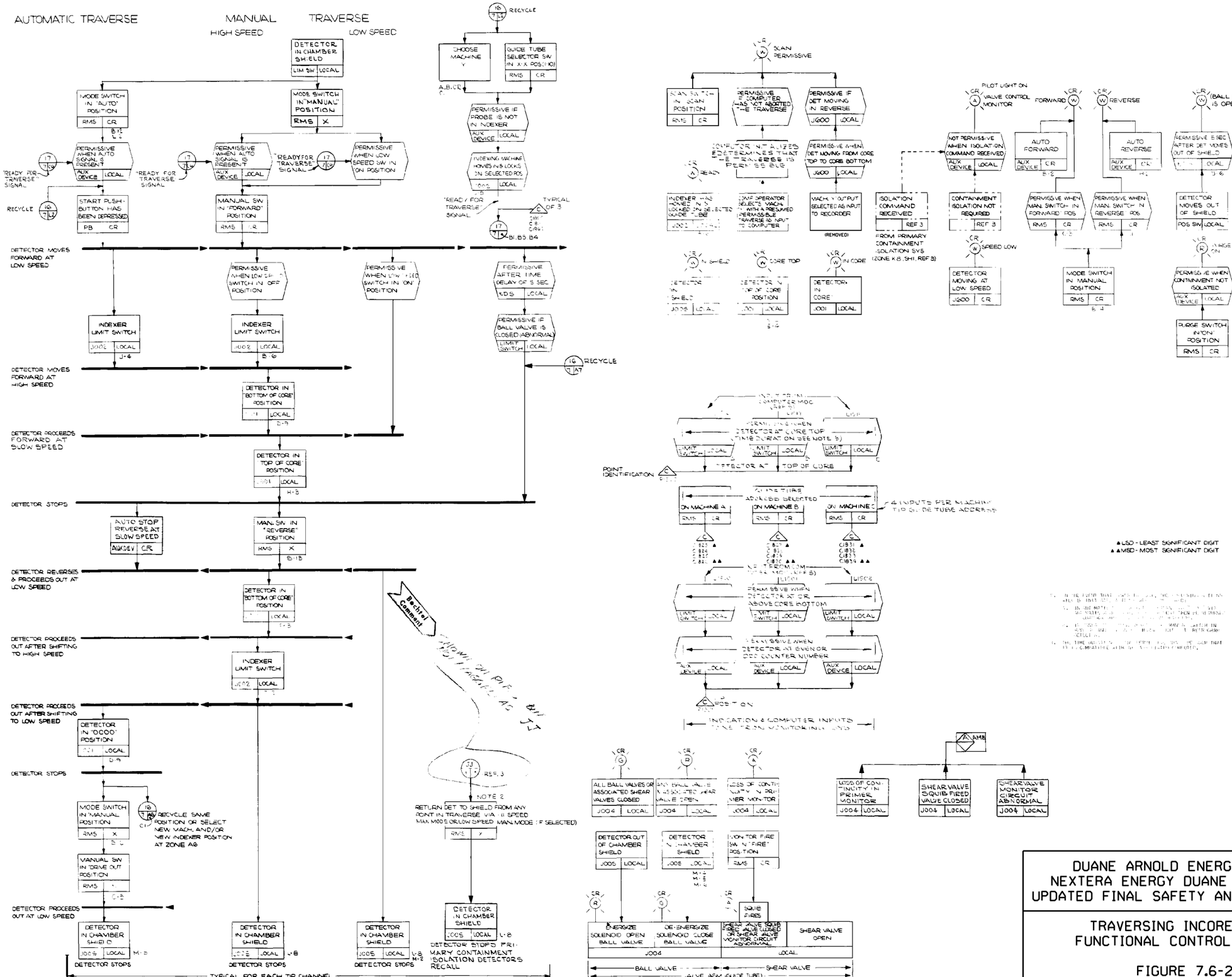

DUANE ARNOLD ENERGY CENTER
NEXTERA ENERGY DUANE ARNOLD, LLC
UPDATED FINAL SAFETY ANALYSIS REPORT

TRAVERSING INCORE PROBE
FUNCTIONAL CONTROL DIAGRAM

FIGURE 7.6-21

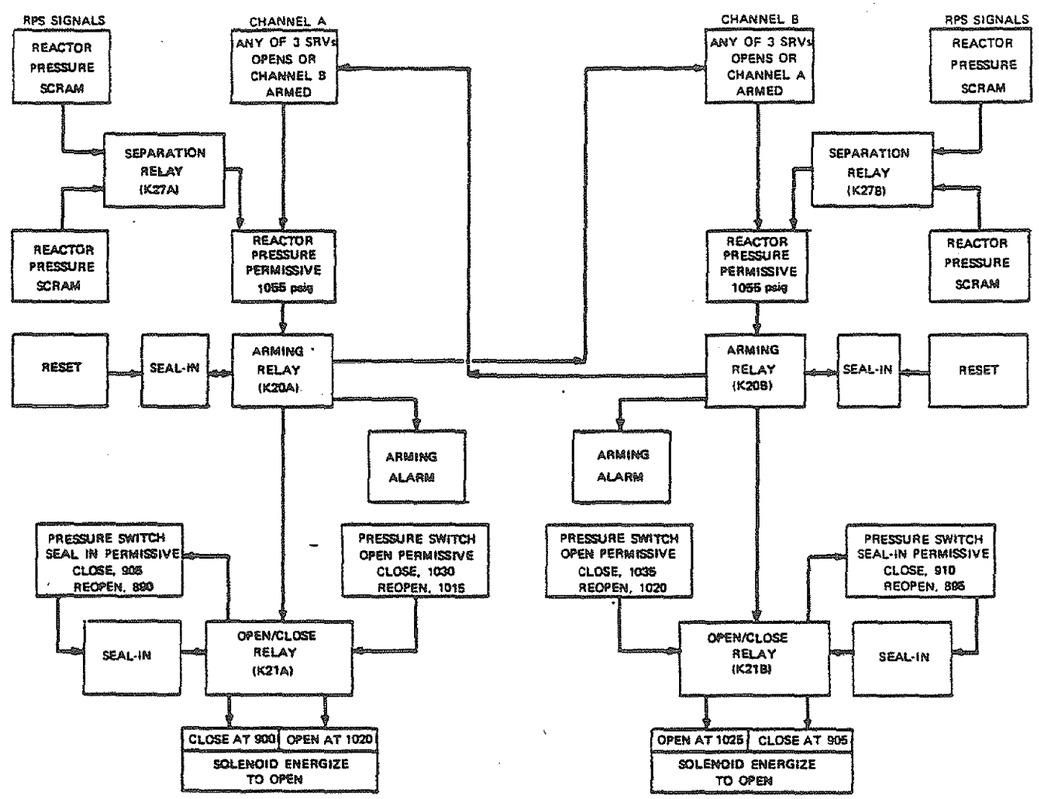

{All settings are nominal values}

DUANE ARNOLD ENERGY CENTER

IES UTILITIES, INC.

UPDATED FINAL SAFETY ANALYSIS REPORT

Safety/Relief Valve Low-Low Set Function

Figure 7.6-31

7.7 CONTROL SYSTEMS NOT REQUIRED FOR SAFETY

This section discusses control systems whose functions are not essential for the safety of the plant. These systems are the feedwater control system, the turbine-generator controls, the reactor manual control system, and the process computer system.

7.7.1 FEEDWATER SYSTEM CONTROL AND INSTRUMENTATION

7.7.1.1 Power Generation Objective

The power generation objective of the feedwater control system is to maintain a preestablished water level in the reactor vessel during normal plant operation.

7.7.1.2 Power Generation Design Basis

The feedwater control system regulates the feedwater flow (1) to maintain adequate water level in the reactor vessel according to the requirements of the system operators and (2) to prevent the exposure of the reactor core over the power range of the reactor.

7.7.1.3 System Description

During normal plant operation, the feedwater control system automatically regulates feedwater flow into the reactor vessel. The system can be manually operated. The feedwater control system includes the two main feedwater control valves and one feedwater startup control valve.

The feedwater flow control instrumentation measures the water level in the reactor vessel, the feedwater flow rate into the reactor vessel, and the steam flow rate from the reactor vessel. During normal operation, these three measurements are used in controlling feedwater flow.

The optimum reactor vessel water level is determined by the requirements of the steam separators. The separators limit water carry-over in the steam going to the turbines and limit steam carry-under in water returning to the core. The water level in the reactor vessel is normally maintained within ± 2 in. of the optimum level during normal operation. This control capability is achieved by comparing feedwater flow to the reactor vessel with the steam flow from the reactor vessel to provide an anticipatory level error signal. The feedwater flow is regulated by adjusting the feedwater control valves to deliver the required flow to the reactor vessel.

7.7.1.3.1 Reactor Vessel Water Level Measurement

Reactor vessel water level is measured by three identical, independent sensing instrument loops (Figure 7.7-1). A differential-pressure transmitter senses the difference between the pressure caused by a constant reference column of water and the pressure caused by the variable height of water in the reactor vessel. The differential-pressure transmitter is installed on lines that serve other systems (see Section 7.6.4). A total of three level differential pressure transmitters to each transmits a level signal to a level indicator and a level switch. Two of the level signals are selectable and the selected level signal is used to provide the level control function to the level controller. The selected signal also feeds a computer point, a level switch and a recorder. The signal of the non-selectable third level differential pressure transmitter only feeds an indicator and a level switch. three pressure transmitters feed three reactor vessel pressure indicators, respectively, in the control room. Signals from two of the three pressure transmitters are selectable and the selected signal is fed to a recorder and a computer point in the control room. The level signal from two of the three sensing systems can be selected by the operator as the signal to be used for feedwater flow control. The selected water level and the reactor vessel pressure signals are continually recorded in the control room.

7.7.1.3.2 Steam Flow Measurement

Steam flow is sensed at each main steam line flow restrictor by a differential-pressure transmitter equipped with square root functions. Signals from these differential-pressure transmitters are added to provide a linear signal proportional to the total steam flow rate. Individual steam line flow signals are indicated in the control room. The total steam flow signal is used for feedwater flow control, and is also recorded in the control room.

7.7.1.3.3 Feedwater Flow Measurement

Feedwater flow is sensed at a flow element in each feedwater line by differential-pressure transmitters. Each feedwater signal is linearized by square root converters. Then the individual mass flow signals are summed to provide a total mass flow signal for the feedwater flow control system. The total feedwater mass flow signal is also recorded in the control room.

In order to increase the reliability of feedwater flow indication, redundant flow measuring devices are installed on a local instrument rack in the turbine building.

The feedwater flow control system is a three-element control system. The three inputs are vessel level, feedwater flow and steam flow. The latter two constitute a flow mismatch that provides level error anticipation.

7.7.1.3.4 Feedwater Control Signal

The level controller and the bias manual/automatic transfer stations produce the final feedwater control signal, either manually or automatically.

The level controller includes proportional integral derivative (PID) function, manual automatic transfer function, single or three element select function and automatic set point set function when the controller is in automatic mode. Besides the three bargraph indications, level, set point and output, the controller also includes a digital indication which can display numerical indication for various parameters. Associated with the level controller is a set point set down switch which when initiated will change the set point to a predetermined value when the controller is in the automatic mode. Input to the controller is derived from one of two sources. The single-element source is the reactor water level only. The three-element source includes measurements of steam flow, feedwater flow, and reactor water level.

The selection of automatic or manual control can be made at the level controller, or at one of three bias manual/automatic stations (one for each feedwater control valve, main and startup). Each bias manual/automatic transfer station is a manual controller with a transfer switch and output indicator. When the system is controlled by the level controller, the bias manual/automatic transfer switch bypasses the transfer station, and the level controller signal goes to the main feedwater control valves and to the feedwater startup control valve. For manual control, the transfer switching blocks the level controller automatic signal, and the operator provides the feedwater control signal at either the level controller or at one of the three bias manual/automatic transfer stations.

Normal Automatic Operation

The feedwater control system uses the three-element control signal to maintain reactor vessel water level within a small margin of optimum water level during plant load changes. This signal is obtained as follows. The total steam flow signal and the total feedwater flow signal are fed into a proportional amplifier. The output from this amplifier reflects the mismatch between its input signals. The output is designated as the steam flow/feedwater flow mismatch signal. When steam flow exceeds feedwater flow, the amplifier output is increased from its normal value. The reverse is also true. This amplifier output is fed to a second proportional amplifier, which also receives the reactor vessel water level signal. The reactor vessel water level signal is biased with the steam flow/feedwater flow mismatch signal to produce the three-element control signal. This signal is fed to the level controller through a converter and signal isolator. The controller compares the input signal against the setpoint and provides the final control signal to the main feedwater control valves and the feedwater startup control valve.

The setpoint of the master controller can be changed to a predetermined level by a manual push button at the operators discretion, and the controller will control the reactor level at that predetermined level automatically if the controller is in the Automatic Mode. The setpoint transfer function will not be in effect when the controller is in Manual Mode. This function is primarily designed to provide a convenient setpoint change for the operator during the execution of IPOI 5, immediate actions in response to a SCRAM.

Optional Automatic Operation

A single-element control signal (reactor vessel water level) can be used to replace the above three-element signal. In such cases, the operator switches the controller input to the "1 element" signal. The reactor level signal is fed to the level controller through a dynamic compensator and a converter and signal isolator. Reactor water level is then controlled by the reactor level signal in accordance with the controller setpoint.

Auxiliary Functions

Alarms are provided for high and low reactor water level and for high pressure. A loss of power signal to the feedwater control valve, Manual/Auto (M/A) stations, and the feedwater startup control valve, or a loss of service air supply to the feedwater startup control valve, or a loss of service air supply to the valves will cause the valves to lock up as is. Both power failure and low air pressure are annunciated. The feedwater startup control valve has annunciation in the control room for 90% or greater open. This annunciation indicates that the startup valve is approaching maximum flow and that action should be taken to transfer to one of the feedwater control valves. The level control system provides interlocks and control functions to other systems. When one out of two reactor feed pumps is lost and coincident or subsequent low water level exists, the recirculation pumps begin to run back to 45% speed. The runback initially helps moderate the level drop. Water level in the downcomer region doesn't recover fast enough and a reactor scram occurs when level reaches the Level 3 trip point. Reactor recirculation flow is also limited on sustained low feedwater flow to ensure that adequate net positive suction head will be provided for the recirculation system.

Two-out-of-three narrow range vessel water level signals at the Hi trip setpoint will cause the feed pumps to trip. Controls to reset the trip are located on panel [redacted] The Reactor Feed Pumps (RFPs) High RPV Level Trip Defeat override may be used in support of the Emergency Operating Procedures (EOPs) in lieu of jumpers and lifted leads. This defeat allows restoration of the feed pumps for flooding above the normal level either in support of RPV Flooding Contingency or the Primary Containment Flooding Contingency. The single key-lock switch has an amber light and individually annunciates on front panel [redacted] when taken to override.

7.7.1.4 Inspection and Testing

All feedwater flow control system components can be tested and inspected according to the recommendations of the manufacturers. This can be done before plant operation and during scheduled shutdowns. Reactor vessel water level indications from the two water-level sensing systems can be compared during normal operation to detect instrument malfunctions. Steam mass flow rate and feedwater mass flow rate can be compared during constant load operation to detect inconsistencies in their signals. The level controller can be tested while the feedwater control system is being controlled by the bias manual/automatic transfer stations.

7.7.2 TURBINE-GENERATOR INSTRUMENTATION AND CONTROL SYSTEMS

7.7.2.1 Power Generation Objective

The power generation objectives of the turbine-generator instrumentation and control systems are the following:

1. To assist in the efficient production of electric power.

2. To limit the NSS shutoff system pressure, temperature, and flow excursions.

7.7.2.2 Power Generation Design Basis

7.7.2.2.1 Electrohydraulic Control (EHC), and Turbine Supervisory Instrumentation (TSI) Controls

The EHC and TSI control system is designed to provide adequate indications, analog records, warnings, and automatic control to maintain steam pressure and thus reactor pressure within preestablished limits during normal plant operation and all anticipated load maneuvers. Within the EHC system there are several subsystems which control the automatic responses of the EHC system. These subsystems are:

Pressure Control Unit
Bypass Control Unit
Speed and Acceleration Control Unit
Valve Flow Control Unit
Load Control Unit

Within the TSI system there are several subsystems such as:

Vibration
Phase Angle
Differential Expansion
Thrust Bearing
Rotor Expansion
Temperature

7.7.2.2.2 Main Condenser Instrumentation and Control

1. Condenser instrumentation is designed to warn operating personnel of high condenser temperatures and pressures. These limits are set to indicate to operating personnel that trouble is developing in the condensing system, hence warning of loss of the condenser as a reactor heat sink.

2. Condenser instrumentation and control is designed to automatically trip the turbine upon increasing pressure in the low-pressure turbine exhaust hoods.

3. Condenser controls are designed to automatically make up and remove water from the condenser hotwell to maintain a nearly constant hotwell water level during startup, normal operation, and minor load excursions. This provides net positive suction head to the condensate pump.

4. Condenser instrumentation is designed to provide control room operators with an analog indication of hotwell level as well as high-level and low-level alarms.

7.7.2.2.3 Condensate System Instrumentation and Control

1. The condensate system instrumentation is designed to provide operating personnel in the control room with an indication of the status of the condensate system with respect to pressure, temperatures, and flow conditions. Abnormal conditions for these items are alarmed.

2. The condensate system controls are designed to maintain a preestablished minimum flow through the condensate pumps, inter and after condenser of the steam jet air ejector, and gland seal condenser.

7.7.2.2.4 Condensate Demineralizer Instrumentation

1. The condensate demineralizer instrumentation is designed to provide a record and indication of the water purity entering the reactor to operating personnel in the control room.

2. The condensate demineralizer instrumentation is designed to warn control room operating personnel of abnormal changes in water purity levels and demineralizer system troubles.

7.7.2.3 System Description

7.7.2.3.1 Electrohydraulic Control (EHC)

The Pressure and Bypass Control Units function together to limit the rate of change in main steam pressure during reactor startup and maintain a constant pressure during turbine startup, normal load-carrying conditions, and minor system load excursions.

Under normal load-carrying conditions, the initial pressure regulator controls the turbine steam control valves to maintain a preestablished main steam pressure. Hence, unit load is varied or held constant by either reactor control rod position or regulation of the reactor coolant recirculation flow, or both. Under these conditions, the turbine-generator follows the reactor power output. If reactor power is increased or decreased, the turbine-generator output increases or decreases accordingly.

During reactor and main steam line warmup and pressurization, the turbine bypass valves are under automatic control through the EHC system. After the main steam lines are at rated pressure, the turbine bypass valves are adjusted to pass from 10% to 20% of rated steam flow. At this time, the turbine steam admission valves are opened to roll the turbine. As the turbine steam flow increases, the EHC system automatically decreases the amount of bypass.

The load limit control unit, the maximum combined flow limit, and the speed control unit signal for any unit can override the pressure control unit of the steam admission valves. The adjustable load set control unit is set by the control room operator. Guidelines for the use of load limit is controlled by plant procedures. In the event reactor power exceeds the set load limit, the EHC system releases the excess flow through the turbine bypass. The speed and acceleration control unit overrides the pressure control unit in the event of turbine overspeed. Again, the excess flow is automatically bypassed to the condenser. The adjustable maximum combined flow limit assumes control of the admission valves when the combined flow of the admission valves and turbine bypass valves reaches the setting of the limiter that is adjustable from 50% to 150%.

Because of the importance of the pressure control unit to turbine-generator operation and its effect on reactor pressure, there are two redundant circuits within the pressure control unit. One normally controls, with the other having a set-point of several psi lower. Should the controlling pressure regulator fail the second regulator assumes control at its setpoint. In the event that the controlling initial pressure regulator fails in a manner to decrease main steam pressure thus opening the admission valves, the steam flow or load increases to the lower of the maximum combined flow limit or load limit as discussed in the previous paragraphs. If the reactor cannot respond to this increased flow, main steam pressure will be reduced. When main steam

pressure decreases further, primary containment isolation and nuclear steam supply system (see Section 7.3.1.1.1) automatically closes the main steam isolation valves, thus causing the reactor control rods to scram.

The turbine stop valves are equipped with limit switches that open when the valves are moved from their fully open position. These switches provide a scram signal to the reactor protection system (see Section 7.2). There are provisions within the EHC system to allow periodic functional testing of the stop and control valves without causing a scram signal as the valves are individually cycled. Stop and control valve cycling may be performed while in three main steam line operation as long as appropriate limitations on reactor power are in place. End-of-cycle testing is performed on the stop valves.

7.7.2.3.2 Low Main Condenser Vacuum Trip

The condenser vacuum trip devices that signal turbine stop valve closure upon low condenser vacuum are shown in Figure 10.3-1. Two sets of switches are redundant to each other with each set providing a turbine trip. The redundant sets of switches sense condenser vacuum through redundant instrument lines from separate pressure taps on the condenser. These switches are configured in a one out of two, taken twice trip logic. Because of the redundancy and logic, the trip system has a high degree of inherent reliability.

The analysis of abnormal operational transients starting in Chapter 15 analyzes specifically the “loss of condenser vacuum” as an event resulting in a nuclear pressure increase. The sudden loss of condenser vacuum represents the event “turbine trip from high power without bypass” and is also analyzed in Chapter 15.

If the turbine stop valves failed to close following a loss of condenser vacuum, the reactor pressure transient would be less severe than the analysis shows because the heat sink loss would be gradual.

The event, “loss of condenser vacuum” is not considered a serious (safety-related) event in itself and need not conform to the requirements of IEEE-279. However, the sudden loss of heat sink by closure of the stop valves and bypass valves that result from loss of vacuum is considered significant and that portion of the circuit does conform to the requirements of IEEE-279.

However, four additional low vacuum trip switches have been added for purposes of closing the main steam isolation valves in the event that condenser vacuum is reduced to a value low enough to suggest lack of response of the turbine stop valves to the closure signals described above. These signals will be active in all modes of operation. These switches can be manually bypassed when the reactor mode switch is not in the “Run” position and the stop valves show closed by position indication.

Four keylock switches are provided to allow bypass of the High Back Pressure MSIV isolation as directed by Emergency Operating Procedures for situations where loss of vacuum was caused by MSIV closure. Opening the MSIVs will provide the steam necessary to re-establish vacuum, however the defeat is not intended as a means of keeping the main condenser available irrespective of its ability to maintain a vacuum.

7.7.3 REACTOR MANUAL CONTROL SYSTEM

7.7.3.1 Power Generation Objective

The objective of the reactor manual control system is to provide the operator with the means to make changes in nuclear reactivity so that reactor power level and power distribution can be controlled. The system allows the operator to manipulate control rods.

7.7.3.2 Safety Design Bases

1. The circuitry provided for the manipulation of control rods is designed so that no single failure can negate the effectiveness of a reactor scram.

2. The repair, replacement, or adjustment of any failed or malfunctioning component does not require that any element needed for reactor scram be bypassed unless a bypass is normally allowed.

7.7.3.3 Power Generation Design Bases

1. The reactor manual control system is designed to inhibit control rod withdrawal following erroneous control rod manipulations so that RPS action (scram) is not required.

2. The reactor manual control system is designed to inhibit control rod withdrawal in time to prevent local fuel damage as a result of erroneous control rod manipulation.

3. The reactor manual control system is designed to inhibit rod movement whenever such movement would result in operationally undesirable core reactivity conditions or whenever instrumentation (due to failure) is incapable of monitoring the core response to rod movement.

4. To limit the potential for inadvertent rod withdrawals leading to RPS action, the reactor manual control system is designed in such a way that deliberate operator action is required to effect a continuous rod withdrawal.

5. To provide the operator with the means to achieve prescribed control rod patterns, information pertinent to the position and motion of the control rods is available in the main control room.

7.7.3.4 System Description

The reactor manual control system consists of the electrical circuitry, switches, indicators, and alarm devices provided for operational manipulation of the control rods and the surveillance of associated equipment. This system includes the interlocks that inhibit rod movement (rod blocks) under certain conditions. The reactor manual control system does not include any of the circuitry or devices used to automatically or manually scram the reactor; these devices are discussed in Section 7.2. Neither the mechanical devices of the control rod drives (CRDs) nor the CRD hydraulic system are included in the reactor manual control system. These mechanical components are described in Section 4.6.

7.7.3.5 General Operation

Figures 7.7-2 and 3.9-5 show the functional arrangement of devices for the control of components in the CRD hydraulic system. Although the figure also shows the arrangement of scram devices, these devices are not part of the reactor manual control system.

Control rod movement is accomplished by admitting water under pressure from a CRD water pump into the appropriate end of the CRD cylinder. The pressurized water forces the piston, which is attached by a connecting rod to the control rod, to move. Three modes of control rod operation are used: insert, withdraw, and settle. Four solenoid-operated valves are associated with each control rod to accomplish the actions required for the various operational modes. The valves control the path that the CRD water takes to the cylinder. The reactor manual control system controls the valves.

Two of the four solenoid-operated valves for a control rod are electrically connected to the insert bus. When the insert bus is energized and when a control rod has been selected for movement, the two insert valves for the selected rod open, allowing the CRD water to take the path that results in control rod insertion. Of the two remaining solenoid-operated valves for a control rod, one is electrically connected to the withdraw bus, and the other is connected to the settle bus. The withdraw valve that connects the insert drive water supply line to the exhaust water header is one that is connected to the withdraw bus. The remaining withdraw valve is connected to the withdraw bus. When both the withdraw bus and the settle bus are energized and when a control rod has been selected for movement, both withdraw valves for the selected rod open, allowing CRD water to take the path that results in control rod withdrawal.

The settle mode is provided to ensure that the CRD index tube is engaged promptly by the collet fingers after the completion of either an insert or withdraw cycle. During the settle mode, the withdraw valve connected to the settle bus is opened or remains open while the other three solenoid-operated valves are closed. During an insert cycle, the settle action vents the pressure from the bottom of the CRD piston to the exhaust header, thus gradually reducing the differential pressure across the drive piston of the selected rod. During a withdraw cycle, the settle action again vents the bottom of the CRD piston to the exhaust header while the withdraw

drive water supply is shut off. This also allows a gradual reduction in the differential pressure across the CRD piston. After the control rod has slowed down, the collet fingers engage the index tube and lock the rod in position. See Figure 7.7-2, Sheet 1, for valve sequence and timing.

The arrangement of control rod selection push buttons and circuitry permits the selection of only one control rod at a time for movement. A rod is selected for movement by depressing a button for the desired rod on the reactor control benchboard in the control room. This benchboard is shown in Figure 7.7-3. The direction in which the selected rod moves is determined by the position of a switch, called the "rod movement" switch, which is also located on the reactor control benchboard. This switch has "rod-in" and "rod-out-notch" positions and returns by spring action to the "off" position. The rod selection circuitry is arranged so that a rod selection is sustained until either another rod is selected or separate action is taken to revert the selection circuitry to a no-rod-selected condition. Initiating movement of the selected rod prevents the selection of any other rod until the movement cycle of the selected rod has been completed. Reversion to the no-rod-selected condition is not possible (except for loss of control circuit power) until any moving rod has completed the movement cycle.

7.7.3.5.1 Insert Cycle

The following is a description of the detailed operation of the reactor manual control system during an insert cycle, provided that the rod worth minimizer is permissive. The cycle is described in terms of the insert, withdraw, and settle buses. The response of a selected rod when the various buses are energized has been explained previously. Figure 7.7-2, Sheets 3 and 4, can be used to follow the sequence of an insert cycle.

A three-position rod movement switch is provided on the reactor control benchboard. The switch has a "rod-in" position, a "rod-out-notch" position, and an "off" position. The switch returns by spring action to the "off" position. With a control rod selected for movement, placing the rod movement switch in the "rod-in" position and then releasing the switch energizes the insert bus for a limited amount of time. Just before the insert bus is deenergized, the settle bus is automatically energized and remains energized for a limited period of time after the insert bus is deenergized. The insert bus time setting and rate of drive water flow provided by the CRD hydraulic system determines the distance traveled by a rod. The timer setting results in a one-notch (6 in.) insertion of the selected rod for each momentary application of a rod-in signal from the rod movement switch. Continuous insertion of a selected control rod is possible by holding the rod movement switch in the "rod- in" position.

A second switch can be used to initiate the insertion of a selected control rod. This switch is the "rod-out-notch-override," (RONOR) switch. The RONOR switch has three positions: "emergency in," "notch override" and "off." The switch returns to the "off" position by spring action. By holding the RONOR switch in the "emergency in" position, the insert bus is continuously energized, causing a continuous insertion of the selected control rod.

7.7.3.5.2 Withdraw Cycle

The following is a description of the detailed operation of the reactor manual control system during a withdraw cycle. The cycle is described in terms of the insert, withdraw, and settle buses. The response of a selected rod when the various buses are energized has been explained previously. Figure 7.7-2, Sheets 3 and 4, can be used to follow the sequence of a withdraw cycle.

With a control rod selected for movement, placing the rod movement switch in the "rod-out-notch" position energizes the insert bus for a short period of time. Energizing the insert bus at the beginning of the withdrawal cycle is necessary to allow the collet fingers to disengage the index tube. When the insert bus in deenergized, the withdraw and settle buses are energized for a controlled period of time. The withdraw bus is deenergized before the settle bus, which, when deenergized completes the withdraw cycle. This withdraw cycle is the same whether the rod movement switch is held continuously in the "rod-out-notch" position or released. The timers that control the withdraw cycle are set so that the rod travels one notch (6 in.) per cycle. (Provisions are included to prevent further control rod motion in the event of timer failure.) A selected control rod can be continuously withdrawn if the rod movement switch is held in the "rod-out-notch" position at the same time that the RONOR switch is held in the "notch-override" position. With both switches held in these positions, the withdraw bus is continuously energized.

7.7.3.6 Control Rod Drive Hydraulic System Control

Two motor-operated pressure control valves, one air-operated control valve, and two solenoid-operated stabilizing valves are included in the CRD hydraulic system to maintain smooth and regulated system operation (see Section 3.9.4).

The motor-operated pressure control valves are positioned by manipulating switches in the control room. The switches for these valves are located close to the pressure indicators that respond to the pressure changes caused by movements of the valves. The air-operated flow control valve is automatically positioned in response to signals from an upstream flow-measuring device. The stabilizing valves are automatically controlled by the action of the energized insert and withdraw buses. The control scheme is shown in Figure 7.7-2, Sheets 2, 3, and 4. The two drive water pumps are controlled by switches in the main control room. Each pump automatically stops upon indication of low suction pressure with a nominal 15 second time delay (Figure 7.7-2, Sheet 2).

7.7.3.7 Rod Block Interlocks

7.7.3.7.1 General

Figure 7.7-2, Sheets 3, 4, and 5, shows the rod block interlocks used in the reactor manual

control system. Figure 7.7-2, Sheets 3 and 4, shows the general functional arrangement of the interlocks, and Figure 7.7-2, Sheet 5, shows the rod-blocking functions that originate in the neutron monitoring system in greater detail. For a discussion of the neutron monitoring system see Section 7.6.1.

To achieve an operationally desirable performance objective where most failures of individual components would be easily detectable or do not disable the rod movement inhibiting functions, the rod block logic circuits are energized when control rod movement is allowed. Each logic circuit receives input trip signals from a number of trip channels, and each logic circuit can provide a separate rod block signal to inhibit rod withdrawal.

The rod block circuitry is effective in preventing rod withdrawal, if required, during both normal (notch) withdrawal and continuous withdrawal. If a rod block signal is received during a rod withdrawal, the control rod is automatically stopped at the next notch position, even if a continuous rod withdrawal is in progress.

The components used to initiate rod blocks in combination with refueling operations provide rod block trip signals to these same rod block circuits. These refueling rod blocks are described in Section 7.6.2.

7.7.3.7.2 Rod Block Functions

The following discussion describes the various rod block functions and explains the intent of each function. The instruments used to sense the conditions for which a rod block is provided are discussed later. Figure 7.7-2 Sheet 5, and Figure 7.6-5 show the rod block initiation functions. Figure 7.6-5 also shows the rod block functions initiated in the neutron monitoring system. The channel A and B annunciating rod block control and nonannunciating rod block control shown at the lower right of Figure 7.7-2, Sheet 5, initiate rod blocks in the reactor manual control system as indicated in Figure 7.7-2, Sheets 3 and 4. The rod block functions provided specifically for refueling situations are described in Section 7.6.2.

1. With the mode switch in SHUTDOWN, no control rod can be withdrawn. This enforces compliance with the intent of the SHUTDOWN mode.

2. The circuitry is arranged to initiate a rod block regardless of the position of the mode switch for the following conditions:

    a. Any APRM upscale rod block alarm. The purpose of this rod block function is to avoid conditions that would require RPS action if allowed to proceed. The APRM upscale rod block alarm setting is selected to initiate a rod block before the APRM high neutron flux scram setting is reached.

b. Any APRM inoperative alarm. This ensures that no control rod is withdrawn unless the average power range neutron monitoring channels are either in service or properly bypassed.

c. Either RBM upscale alarm. This function is provided to stop the erroneous withdrawal of a single worst-case control rod so that local fuel damage does not result. Although local fuel damage poses no significant threat in terms of radioactive material released from the nuclear system, the alarm setting is selected so that no local fuel damage results from a single control rod withdrawal error during power range operation.

d. Either RBM inoperative alarm. This ensures that no control rod is withdrawn unless the RBM channels are in service or properly bypassed.

e. Any recirculation flow converter upscale or inoperative alarm. This ensures that no control rod is withdrawn unless the recirculation flow converters, which are necessary for the proper operation of the APRM, are operable. The upscale nominal trip setting is ≤ 110%.

f. Recirculation flow converter comparable alarm. This ensures that no control rod is withdrawn unless the difference between the outputs of the flow converters is within limits and the comparators are in service. The nominal trip setting is ≤ 10% flow deviation.

g. Scram discharge volume high water level. This ensures that no control rod is withdrawn unless enough capacity is available in the scram discharge volume to accommodate a scram. The setting is selected to initiate a rod block well in advance of that level which produces a scram. The nominal trip setting is ≤ 24 gallons.

h. Scram discharge volume high-level scram trip bypassed. This ensures that no control rod is withdrawn while the scram discharge volume high-water-level scram function is out of service.

i. The RWM microcomputer system can initiate a rod withdrawal block and a rod insert block. The purpose of this function is to reinforce procedural controls that limit the reactivity worth of control rods under low-power conditions. The rod block trip settings are based on the allowable control rod worth limits established for the design basis rod drop accident. Adherence to prescribed control rod patterns is the normal method by which this reactivity restriction is observed. Additional information on the RWM function is available in Section 7.7.7.

j. Rod position information system malfunction. This ensures that no control rod can be withdrawn unless the rod position information system is in service.

k. Rod movement timer switch malfunction during withdrawal. This ensures that no control rod can be withdrawn unless the timer is in service.

3. With the mode switch in RUN, the following conditions initiate a rod block:

a. Any APRM downscale alarm. This ensures that no control rod is withdrawn during power range operation unless the average power range neutron monitoring channels are operating properly or are correctly bypassed. All unbypassed average power range monitors must be onscale during reactor operation in the RUN mode.

b. Either RBM downscale alarm. This ensures that no control rod is withdrawn during power range operation unless the RBM channels are operating properly or are correctly bypassed. Unbypassed rod block monitors must be onscale during reactor operations in the RUN mode. The rod block monitors are automatically bypassed when reactor power is less than 30%.

4. With the mode switch in STARTUP or REFUEL, the following conditions initiate a rod block:

a. Any SRM detector not fully inserted into the core when the SRM count level is below the retract permit level and any IRM range switch on either of the two lowest ranges. This ensures that no control rod is withdrawn unless all SRM detectors are properly inserted when they must be relied on to provide the operator with neutron flux level information.

b. Any SRM upscale level alarm. This ensures that no control rod is withdrawn unless the SRM detectors are properly retracted during a reactor startup. The rod block setting is selected at the upper end of the range over which the source range monitor is designed to detect and measure neutron flux.

c. Any SRM downscale alarm. This ensures that no control rod is withdrawn unless the SRM count rate is above the minimum prescribed for low neutron flux level monitoring.

d. Any SRM inoperative alarm. This ensures that no control rod is withdrawn during low neutron flux level operations unless proper neutron monitoring capability is available in that all SRM channels are in service or properly bypassed.

e. Any IRM detector not fully inserted into the core. This ensures that no control rod is withdrawn during low neutron flux level operations unless proper neutron monitoring capability is available in that all IRM detectors are properly located.

f. Any IRM upscale alarm. This ensures that no control rod is withdrawn unless the intermediate range neutron monitoring equipment is properly upranged during a reactor startup. This rod block also provides a means to stop rod withdrawal in time to avoid conditions requiring RPS action (scram) in the event that a rod withdrawal error is made during low neutron flux level operations.

g. Any IRM downscale alarm except when range switch is on the lowest range. This ensures that no control rod is withdrawn during low neutron flux level operations unless the neutron flux is being properly monitored. This rod block prevents the continuation of a reactor startup if the operator upranges the intermediate range monitor too far for the exiting flux level; thus, the rod block ensures that the intermediate range monitor is onscale if control rods are to be withdrawn.

h. Any IRM inoperative alarm. This ensures that no control rod is withdrawn during low neutron flux level operations unless proper neutron monitoring capability is available in that all IRM channels are in service or properly bypassed.

7.7.3.7.3 Rod Block Bypasses

To permit continued power operation during the repair or calibration of equipment for selected functions that provide rod block interlocks, a limited number of manual bypasses are permitted as follows:

1. One SRM channel.

2. Two IRM channels (one on either bus A or bus B).

3. Two APRM channels (one on either bus A or bus B).

4. One RBM channel.

The permissible IRM and APRM bypasses are arranged in the same way as in the reactor protection system. The intermediate range monitors are arranged as two groups of equal numbers of channels. One instrument powered from each RPS bus may be bypassed. The groups are chosen so that adequate monitoring of the core is maintained with one channel bypassed in each group. The same type of grouping and bypass arrangement is used for the average power range monitor.

These bypasses are effected by positioning switches in the main control room. A light in the control room indicates the bypassed condition.

An automatic bypass of the SRM detector position rod block is effected as the neutron flux increases beyond a preset low level on the SRM instrumentation. The bypass allows the detectors to be partially or completely withdrawn as a reactor startup is continued.

An automatic bypass of the RBM rod block occurs whenever the power level is below 30% of rated core power or whenever a peripheral control rod is selected. Either of these two conditions indicates that local fuel damage is not threatened and that RBM action is not required.

The RWM rod block function was originally automatically bypassed when reactor power increased above a preselected value in the power range. At the DAEC, rod worth control is now enforced at all power levels. The RWM may be manually bypassed for maintenance at any time.

7.7.3.7.4 Arrangement of Rod Block Trip Channels

The grouping of neutron monitoring equipment used in the rod block circuitry (APRM, IRM, SRM, and RBM) is different than that used in the Reactor Protection System. One half of the total number of average power range monitors, intermediate range monitors, source range monitors, and rod block monitors provides inputs to one of the rod block logic circuits, and the remaining half provides inputs to the other logic circuit. One recirculation flow converter provides a rod block signal to one logic circuit; the remaining converter provides an input to the other logic circuit. The flow converter comparator provides trip signals to each flow converter trip circuit.

Scram discharge volume high water level signals are provided as inputs into one of the two rod block logic circuits. Both rod block logic circuits sense when the high water level scram trip for the scram discharge volume is bypassed.

The rod withdrawal block from the RWM trip affects both rod block logic circuits. The rod insert block from the RWM function prevents energizing the insert bus for both notch insertion and continuous insertion.

The APRM and RBM rod block settings in the RUN mode are varied as a function of recirculation flow and core thermal power, respectively. The APRM rod block setting in the STARTUP mode is a fixed value. Analyses show that the settings selected are sufficient to avoid both RPS action and local fuel damage as a result of a single control rod withdrawal error. Mechanical switches in the SRM and IRM detector drive systems provide the position signals used to indicate that a detector is not fully inserted. Additional detail on all the neutron monitoring system trip channels is available in Section 7.6.1. The rod block from scram discharge volume high water level uses one nonindicating float switch installed on the scram discharge volume; a second float switch provides a control room annunciation of increasing level.

7.7.3.8 Control Rod Information Displays

The operator has three different displays of control rod position:

1. Rod status display.

2. Four rod display.

3. Rod Worth Minimizer display.

These displays serve the following purposes:

1. Provide the operator with a continuously available, easily understood presentation of each control rod's status.

2. Provide continuously available, easily discernible warning of an abnormal condition.

3. Present numerical rod position for each rod.

4. Log all control rod positions on a routine basis.

The rod status display is located on a control board in the main control room. It provides the following continuously available information for each individual rod:

1. Rod position, fully inserted (green).

2. Rod position, fully withdrawn (red).

3. Rod identification (coordinate position of selected rod, white).

4. Accumulator trouble (amber).

5. Rod scram (blue).

6. Rod drift (red).

Also dispersed throughout the display in locations representative of the physical location of LPRM strings in the core are LPRM lights as follows:

1. LPRM low flux level (white).

2. LPRM high flux level (amber).

A separate four rod display includes the LPRM values for each of the detector arrays surrounding the rod selected (Figures 7.7-3 and 7.7-4). Since each detector array contains 4 sensors in a vertical column and there can be a maximum of 4 detector arrays surrounding a rod, 16 meters are installed. Between the LPRM indicators are four rod position modules. These four modules will display rod position in two digits and rod selected status (white light, off or on) for the four rods located within the LPRM detector arrays being displayed. The rod position digital range is from [redacted] with [redacted] representing the fully in position and [redacted] fully out; each even increment, for example, [redacted] The four rod display allows the operator to easily focus his attention on the core volume of concern during rod movements.

Control rod position information is obtained from reed switches in the control rod drive that open or close during rod movement. Reed switches are provided at each 3-in. increment of piston travel. Since a notch is 6 in., indication is available for each half-notch of rod travel. The reed switches located at the half-notch positions for each rod are used to indicate rod drift. Both a rod selected for movement and the rods not selected for movement are monitored for drift. A drifting rod is indicated by an alarm and red light in the main control room. The rod drift condition is also monitored by the Plant Process Computer and Rod Worth Minimizer.

Reed switches are also provided at locations that are beyond the limits of normal rod movement. If the rod drive piston moves to these overtravel positions, an alarm is sounded in the control room. The overtravel alarm provides a means to verify that the drive-to-rod coupling is intact, because with the coupling in its normal condition, the drive cannot be physically withdrawn to the overtravel position. Coupling integrity can be checked by attempting to withdraw the drive to the overtravel position and observing that no over travel alarm occurs.

The Plant Process Computer system receives position indication from the Rod Worth Minimizer microcomputer and can display and print all rod positions in a prearranged sequence. The user may order a computer display or printout at any time. The display and printout depict the rod positions in an array corresponding to the other displays and actual core location . The display and printout are always in the same order; if there is an unavailable input, the display and printout will signify it by [redacted] while [redacted] indicates the rod is fully withdrawn.

All displays are essentially independent of one another. Signals for the rod status display are hard wired from the rod position information system cabinet buffer outputs, so that a signal failure of other parts of the rod position information system cabinet will not affect this display. Likewise, the computer could conceivably fail and the rod status and rod position displays will continue to function normally.

The following control room lights are provided to allow the operator to know the conditions of the CRD hydraulic system and the control circuitry (Figure 7.7-2, Sheets 1 and 2):

1. Stabilizing valve selector switch position.

2. Insert bus energized.

3. Withdraw bus energized.

4. Settle bus energized.

5. Withdrawal not permissive.

6. Notch override.

7. Pressure control valve position.

8. Flow control valve position.

9. Drive water pump low suction pressure (alarm only).

10. Drive water filter high differential pressure (alarm only).

11. Charging water (to accumulator) low pressure (alarm only).

12. Control rod drive temperature.

13. Scram discharge volume not drained (alarm only).

14. Scram valve pilot air header low pressure (alarm only).

7.7.3.9 Safety Evaluation

The circuitry described for the reactor manual control system is completely independent of the circuitry controlling the scram valves. This separation of the scram and normal rod control functions prevents failures in the reactor manual control circuitry from affecting the scram circuitry. The scram circuitry is discussed in Section 7.2. Because each control rod is controlled as an individual unit, a failure that results in the energizing of any of the insert or withdraw solenoid valves can affect only one control rod. The effectiveness of a reactor scram is not impaired by the malfunctioning of any one control rod. No single failure in the reactor manual control system can result in the prevention of a reactor scram. Repair, adjustment, or maintenance of reactor manual control system components does not affect the scram circuitry.

7.7.3.10 Inspection and Testing

The reactor manual control system can be routinely checked for proper operation by manipulating control rods using the various methods of control. Detailed testing and calibration can be performed by using standard test and calibration procedures for the various components of the reactor manual control circuitry.

7.7.4 PLANT PROCESS COMPUTER SYSTEM

7.7.4.1 Power Generation Objective

The objectives of the Plant Process Computer system (PPC) are to provide the safety parameter display system functions (discussed in section 7.7.6), to perform frequent calculations of reactor thermal power and related parameters, to provide information to the core monitoring system so that a quick and accurate determination of core thermal performance can be performed; and to improve data collection and processing, accounting, alarming and logging functions. An auxiliary function of the PPC is to transmit plant data to remote locations, including the Technical Support Center and the Emergency Operations Facility.

7.7.4.2 Power Generation Design Bases

1. The PPC system is designed to periodically determine the reactor thermal power output.

2. The PPC provides near-continuous monitoring of the core operating level and appropriate alarms based on established core operating limits to aid the operator in ensuring that the core is operating within acceptable limits at all times, especially during periods of power level changes.

3. The PPC provides information to the core monitoring software such that the three-dimensional power density and isotopic concentration data for each fuel bundle in the core may be calculated.

4. The PPC receives control rod information from the Rod Worth Minimizer (RWM) for display and printout of control rod patterns to aid the operator in adhering to procedural restrictions of control rod manipulation. The PPC also receives RWM status information.

5. The PPC provides status alarm logging of selected contact-actuated status changes for nuclear systems alarm inputs to aid in general operation of the plant.

6. The PPC provides post-scram analysis logging of the sequence of contact-actuated changes for alarm inputs on reactor scram trip devices and logging of stored data before and after a reactor scram for selected analog inputs.

7. The PPC normally receives power from 480-V load center 1B6. If power from this source is not available, the system is powered by the TSC/PPC standby generator, or 480-V Panel 1L66.

7.7.4.3 Safety Objective

The PPC has no safety objective.

7.7.4.4 Safety Design Basis

The PPC has no safety design basis.

7.7.4.5 Computer System Components

7.7.4.5.1 Central Processor

The central processor performs various calculations and provides for general input/output (I/O) device control and buffered transmission between I/O devices and memory.

The processor uses interrupt capability to respond rapidly to important process functions and to operate at optimum speed.

Capability is provided to maintain real time using an internal clock (date, hours, minutes, seconds, tenths, hundredths). The PPC VAX has a battery backed-up clock. Therefore, even in the event of a processor shutdown, the clock will automatically continue to provide the correct time.

7.7.4.5.2 Bulk Memory Subsystem

Bulk memory consists of hard disks and is used for the storage of the software programs, data, and other important information. Capability is provided for file protection; to protect against information destruction caused by an inadvertent attempt to write over the files or by a system power failure.

7.7.4.5.3 Peripheral I/O Subsystem

The peripheral I/O equipment used to read programming data into and out of the computer consists of a magnetic tape unit, I/O, general use, and alarm printers, and color CRTs. The magnetic tape unit and I/O printer are located in the Data Acquisition Center. The on-demand and alarm printers are located in the main control room.

7.7.4.5.4 Data Acquisition Subsystem (DAS) Hardware

Data Acquisition Subsystem (DAS) hardware is located in [redacted] A High Speed Serial Processor (HSSP) interfaces with Intelligent Remote Control Units (IRCUs) in Division I and II, non-divisional, and meteorological DAS chasses. The IRCUs function as the interface between the DAS input/output circuits and the PPC. They control DAS functions and provide data requested by the PPC VAX programs. The IRCUs and the PPC processor perform scanning, time tagging, sequence of events, error checking, and other signal processing functions. The PPC has the capability to time tag events with a resolution of at least one millisecond.

The Plant Process Computer is electronically isolated from the DAS. Fiber optic communication links are used to provide input to the PPC VAX from the DAS.

7.7.4.5.5 CRT Color Terminals

During routine operation, the operator uses CRT color terminals located in the main control room to enter information into the computer and for requesting various special functions from it.

7.7.4.6 <u>Reactor Core Performance Function</u>

7.7.4.6.1 Power Distribution Evaluation

The local power density of every six inch segment for every fuel assembly is calculated using plant inputs of pressure, temperature, flow, LPRM levels, control rod positions, and the calculated fuel exposure. Total core thermal power is calculated from a reactor heat balance. Iterative computational methods are used to establish a compatible relationship between the core coolant flow and core power distribution. The results are subsequently interpreted as local power at specified axial segments for each fuel bundle in the core.

The core distribution calculation sequence is completed periodically and on demand. Subsequent to executing the program, the computer prints a periodic log.

7.7.4.6.2 Core Monitoring

Each LPRM reading is scanned once per second. This information, combined with heat balance information, allows for periodic and automatic monitoring of core thermal limits. These computations are accurate periodic power distribution calculations.

7.7.4.6.3 LPRM Calibration

Flux level and position data from the TIP equipment are read into the computer. The computer evaluates the data and determines gain adjustment factors by which the LPRM amplifier gains can be altered to compensate for exposure-induced sensitivity loss. The LPRM amplifier gains are not to be physically altered except immediately prior to and/or as part of a whole core calibration using the TIP subsystem. The gain adjustment factor computations help to indicate to the operator when such a calibration procedure is necessary.

7.7.4.6.4 Fuel Exposure

Using the power distribution data, a distribution of fuel exposure increments from the time of a previous power distribution calculation is determined and is used to update the distribution of cumulative fuel exposure. Each fuel bundle is identified by batch and location, and its exposure is stored for each of the axial segments used in the power distribution calculation. These data are printed out on demand by the operator.

7.7.4.6.5 Control Rod Exposure

Exposure increments are determined periodically for each one-quarter length section of each control rod. The corresponding cumulative exposure totals are periodically updated and printed out on demand by the operator.

7.7.4.6.6 LPRM Exposure

The exposure increment of each local power range monitor is determined periodically and is used to update both the cumulative ion chamber exposures and the correction factors for exposure-dependent LPRM sensitivity loss. These data are printed out on demand by the operator.

7.7.4.6.7 Isotopic Composition of Exposed Fuel

The computer provides online capability to determine isotopic composition for each fuel bundle in the core. This evaluation consists of computing the weight of one neptunium, three uranium, and five plutonium isotopes as well as the total uranium and total plutonium content. The method of analysis consists of relating the computed fuel exposure and average void fraction for the fuel to computer-stored isotopic characteristics applicable to the specific fuel type.

7.7.4.6.8 Stability Monitoring

In response to Generic Letter 94-02 (Reference 1), an on-line stability monitoring system was installed following Refuel Outage 14. This stability monitoring is accomplished via use of the SOLOMON system and provides operators with a means of detecting when stability margin is degrading. Per Reference 2, operation within the "buffer zone" as shown on the power flow map included in the Core Operating Limits Report (COLR) in not allowed when SOLOMON is inoperable.

7.7.4.7 <u>Plant Process Computer System Software</u>

7.7.4.7.1 Data Acquisition and Processing Software

The data acquisition and processing software scans the plant instrumentation to gather data from plant data systems; supports signal processing such as ranging, span and zero adjustments; and makes the data available for subsequent data storage and processing by the PPC.

The software controls the processing associated with the following types of field inputs/outputs;

1. Analog inputs

2. Digital inputs

3. Sequence-Of-Events (SOE) inputs

4. Pulse inputs

5. Digital outputs

6. Analog outputs

The software provides six different scan classes (i.e., scan frequencies) for assigning point scan/processing frequency for analog points. All digital points are in the one second scan class. Additionally, the software provides for alarming of analog and digital points, limit checking of values, and quality code determination.

The alarm CRT displays all analog point alarms generated by the system. The alarm list is divided into an unacknowledged alarm section and an acknowledged alarm section. A white line separates the two sections. Alarm lines in each area are sorted first by priority and then chronologically. When there are no unacknowledged alarms, the white line will not appear.

The alarm logs are hard-copy records of the alarm CRT displays and are typed by the alarm printer located underneath the common console in the main control room.

Alarm printouts are used to inform the operator of computer system malfunctions, plant system operation exceeding acceptable limits, and potentially off-normal, or failed input sensors.

7.7.4.7.2 Balance of Plant (BOP) Software

7.7.4.7.2.1 Man-Machine Interface (MMI)

The Balance Of Plant (BOP) Software provides a man-machine interface (MMI) to the Plant Process Computer programs and the process data base. The BOP software provides capability for data display, data storage, and report generation. The information is available through hierarchically structured menus and is designed to operate under all normal plant operating conditions. The user uses the following touchscreen menus for accessing the data display, storage, and reporting functions:

1. Master Menu

2. Plant Process Computer Operations Menu

3. Group Menu

4. DGS Demandable Function Menu

5. BOP Reporting Menu

6. Data Trending and Plotting Menu

7. Maintenance Menu

8. Utilities Menu

The log and reporting menus will provide capability for data display, data storage, and report generation. The information will be available through various Balance Of Plant software modules.

7.7.4.7.2.2 NSSS/BOP Post-Trip Logging

The Plant Process Computer (PPC) and the plant strip chart recorders support the reconstruction of the sequence of events following a reactor trip. The PPC software is capable of accessing 4096 analog and digital input points, many of which are time sequenced on the alarm printer. The alarm printer provides time signatures (typically 2 milliseconds) for important data points, depending on the alarm point priority, sequencing, and computer scan class. Low priority computer inputs are stored in the computer during periods of maximum printer demand and may be printed out at a later time.

The NSSS/BOP Post-trip Log consists of the following:

Values for the nuclear steam supply system variables are provided for several key parameters before and after a scram. These parameters include core thermal power, total core flow, reactor water level, reactor pressure, etc.

Values for the balance of plant variables are provided by the computer before and after a scram. The selected variables include turbine-generator parameters, feedwater system parameters, and condenser parameters.

The operator's choice for the sampling rate for the post-trip log is from one to sixty seconds in one second increments. The pre-trip time window is 0 to 20 minutes and the post-trip time window is 0 to 20 minutes with the restriction that the total time window for the NSSS/BOP Post-trip Log shall not be greater than 20 minutes.

The strip chart recorders provide a continuous, analog record of such information as neutron flux, recirculation pump flow, emergency core cooling system parameters, feedwater and condensate system parameters, containment parameters, radiation monitoring, ventilation system parameters, and turbine-generator variables.

7.7.4.8 Inspection and Testing

The process computer system is self checking. It performs diagnostic checks to determine the operability of certain portions of the system hardware, and it performs internal programming checks to verify that input signals and selected program computations are either within specific limits or within reasonable bounds.

7.7.5 RECIRCULATION FLOW CONTROL SYSTEM

7.7.5.1 Power Generation Objective

The power generation objective of the recirculation flow control system is to control reactor power level, over a limited range, by controlling the flow rate of the reactor recirculating water.

7.7.5.2 Power Generation Design Bases

1. The recirculation flow control system is designed to allow variation of the recirculation flow rate.

2. The recirculation flow control system is designed to allow manual recirculation flow adjustment, so that manual control of reactor power level and load following are possible.

7.7.5.3 Safety Design Bases

The recirculation flow control system functions so that no abnormal operational transient resulting from a malfunction in the recirculation flow control system can result in damaging the fuel or exceeding the nuclear system pressure limits.

7.7.5.4 System Description

7.7.5.4.1 General

Reactor recirculation flow is changed by adjusting the speed of the two reactor recirculation pumps. The recirculation flow control system controls the power supplied to the recirculation pump motors. By adjusting the frequency of the electrical power supplied to the recirculation pump motors, the recirculation flow control system can manually affect changes in reactor power level. The reactor recirculation flow control system can control recirculation pump speed over a nominal range of 330 RPM to 1710 RPM. Minimum speed is set by the scoop tube positioner electrical stops. When the reactor is operating in a desired control rod pattern, flow adjustments can smoothly change reactor power over a power range of about 50%, without movement of the control rods.

An increase in recirculation flow temporarily reduces the void content of the moderator by increasing the flow of coolant through the core. The additional neutron moderation increases the reactivity of the core, which causes the reactor power level to increase. The increased steam generation rate increases the steam volume in the core with a consequent negative reactivity effect, and a new steady-state power level is established. When recirculation flow is reduced, the power level is reduced in the reverse manner.

Figure 7.7-6 illustrates how the recirculation flow control system operates.

Each recirculation pump motor has its own motor-generator (M-G) set for a power supply. A variable speed converter is provided between the M-G set motor and generator. To change the speed of the reactor recirculation pumps, the variable speed converter varies the generator speed, which changes the frequency supplied to the pump motor to give the desired pump speed. The recirculation flow control system uses demand signals supplied by manual adjustment of the speed controllers.

The speed controller signal adjusts its M-G set variable speed converter as follows: The controller demand signal is compared with the setpoint. The speed controller differential signal causes adjustment of the speed converter, resulting in a change of the generator speed until the setpoint equals the controller demand signal.

7.7.5.4.2 Motor-Generator Set

Each M-G set supplies power to its associated recirculating pump motor. Each of the two M-G sets and its controls are identical; therefore, only one description is given of the M-G set. The M-G set can continuously supply power to the pump motor at any speed between approximately 19% and 96% of drive motor speed. The M-G set is capable of starting the pump and accelerating it from standstill to the desired operating speed when the pump motor thrust bearing is fully loaded by reactor pressure acting on the pump shaft.

The main components of the M-G set are a drive motor, a generator, and a variable speed converter with an actuation device to adjust the converter speed.

During restoration from Single Loop Operation, after startup of the idle recirculation pump, the discharge valve of the lower speed pump may not be opened unless the speed of the faster pump is less than 50% of its rated speed. This is to restrict reactor vessel internals vibration to within acceptable limits.

An investigation has been conducted to determine the consequence of a postulated case of simultaneous loss of both recirculation M-G set fields. Since this occurrence is not reasonably expected during the plant life, neither can it result from a single operator error or a single equipment malfunction; therefore, this postulation cannot be classified as an abnormal operational transient as defined in Chapter 15. Nevertheless, an analysis was performed, and the thermal hydraulic effect from this postulated event resulted in greater MCHFR than that for a postulated single recirculation pump shaft seizure. (Note: MCHFR is the historical fuel thermal limit. The current limit used is the Minimum Critical Power Ratio (MCPR) as described in Chapter 4.)

Drive Motor

The drive motor is an ac induction motor that drives the input shaft of the variable speed converter. The motor can operate under electric supply variations of 5% of rated frequency or 10% of rated voltage. The ac power for each drive motor is supplied from a different bus.

Generator

The variable frequency generator is driven by the output shaft of the variable speed converter. During normal operation, the generator exciter is powered by the drive motor. The excitation of the generator is provided from an auxiliary source during pump startup.

Variable Speed Converter and Actuation Device

The variable speed converter transfers power from the drive motor to the generator. The variable speed converter actuator automatically adjusts the slip between the converter input shaft and output shaft as a function of the signal from the speed controller. If the speed controller is lost, or if the actuator electrical power supply is interrupted, the actuator causes the speed converter slip to remain "as is." Manual reset of the actuation device is required to return the speed converter to normal operation.

7.7.5.4.3 Speed Control Components

The speed control system controls the variable speed converters of both M-G sets. The M-G sets are individually manually controlled. The control system components for each M-G set are the following: a speed indicating controller, a generator tachometer, and a V/I converter .

Speed Indicating Controller (one for each M-G set)

The speed indicating controller transmits the signal that adjusts the M-G set variable speed converter. The speed indicating controller receives a signal from the V/I converter to monitor the generator speed. The speed converter adjusts the demand signal according to the magnitude and duration in the difference between the demand signal and the desired setpoint. A zero difference between the setpoint and the demand signal will result in a steady generator speed.

The recirculation speed setpoint is manually controlled via operator adjustment of the speed indicating controller.

The speed indicating controller has four indicators, three bar graphs and a digital meter. The three bar graphs will continuously display the M-G set scoop tube position setpoint and controller output to assist the operator. The digital meter on the speed indicating controller can be used to display any of the variables: position, speed, setpoint and controller output.

Start-up Signal

The speed indicating controller generates a start-up signal that adjusts the variable speed converter so that a proper amount of power can be delivered from the M-G set to start and accelerate the pump motor to the minimum continuous operating speed.

Limiters

The speed indicating controller will 1imit the output if either the recirculation pump discharge valve is not fully open or total feedwater flow is less than 20% of rated. This limited output signal will reduce the generator speed to the minimum speed. This limiting action is to prevent pump overheating should the discharge valve be closed and protect the recirculation pump against possible cavitation due to low feed water flow.

The speed indicating controller will limit the output in the event of shutdown of any one feedwater pump and the reactor vessel level is below the point at which vessel low-level alarm is initiated. The limited signal will cause a reduction of generator and recirculation pump speed so that resultant reactor power reduction is not within the capabilities of the feedwater system. This limiting action doesn't allow vessel level to recover fast enough and a reactor scram occurs when level reaches the Level 3 trip point.

Failure Alarm

If the speed indicating controller were to fail or upon loss of the feedback signal to the recirculation speed controller, a normally energized contact in the speed indicating controller will actuate an alarm in the control room and acts to prevent any change of slip within the variable speed converter.

Deviation Signal

The deviation between the slip device controller's (scoop tube actuator) actual position and the demand signal to that device is compared in the speed controller. If a large positive deviation is sensed at the positioner between demand and actual position, the scoop tube will lock. Together, this limits the amount of recirculation pump speed change can result from mismatches between the demanded speed signal and the actual slip device position.

Generator Tachometer (one for each M-G set)

The generator tachometer is directly connected to the generator shaft and supplies the feedback signal to the V/I converter. The V/I converter supplies a monitor signal to the speed indicating controller.

7.7.5.4.4 Safety Evaluation

The recirculation flow control system is designed so that coupling is maintained between an M-G set drive motor and its generator even if the ac power or a speed controller signal fails. This ensures that the drive motor inertia contributes to power supplied to the recirculation pump during the coastdown of the M-G set after loss of ac power and that the generator continues to be driven if the speed controller signal is lost.

Transient analyses described in the Accident Analyses section (Chapter 15) show that no malfunction in the recirculation flow control system can cause a transient sufficient to damage the fuel barrier or exceed the nuclear system pressure limits, as required by the safety design basis.

A topical report, NEDO-10677, has been prepared by General Electric for the Enrico Fermi 2 and Browns Ferry class reactors describing the probable consequences from recirculation pump overspeed in a typical BWR. This report was submitted to the AEC in October 1972.

The report states basically that in the unlikely event that a break occurs in the recirculation line, the pump impeller may act as a hydraulic turbine causing the pump and motor to overspeed and become potential sources of missiles. See Section 3.5.1.2.1.

7.7.5.4.5 Inspection and Testing

The M-G set speed controller functions during normal power operation. Any abnormal operation of this component can be detected during operation. The components that do not continually function during normal operation can be tested and inspected for calibration and operability during scheduled plant shutdowns. All the recirculation flow control system components are tested and inspected according to normal plant practices, recommendations of the component manufacturers and operating history. This can be done during scheduled shutdowns.

7.7.6 SAFETY PARAMETER DISPLAY SYSTEM

7.7.6.1 Power Generation Objective

The objective of the safety parameter display system (SPDS) is to provide a concise display of critical plant variables to the control room personnel to aid them in rapidly and reliably determining the safety status of the plant. The SPDS will be operated during normal plant operations, as well as during abnormal and emergency conditions. The principal purpose and function of the SPDS is to aid the control room personnel during abnormal and emergency conditions in determining the safety status of the plant.

7.7.6.2 Power Generation Design Bases

1. The SPDS will continuously display real-time information in the control room from which the plant safety status can be readily and reliably assessed by control room personnel.

2. The SPDS is not a safety system and it will perform no active safety function. The existing control room instrumentation will provide the operators with the information necessary for safe reactor operation under normal, transient, and accident conditions. The SPDS will be used in addition to the existing instrumentation and will serve to aid and augment it. No emergency action will be taken based on the SPDS data alone.

3. The graphic design of the displays and the location of the SPDS terminal in the control room was human-factor engineered in accordance with the criteria of NUREG-0696 and NUREG-0700.

4. The SPDS is designed to operate continuously during all reactor operating modes, i.e.,

   a. Startup/hot standby.

   b. Run.

   c. Shutdown.

   d. Refuel.

   Reactor mode switch position is indicated on all SPDS displays.

5. The SPDS is designed to obtain a minimum availability of 98% with a goal of 99% availability during plant operation and 80% during cold shutdown.

   Availability calculations use the definitions and methodology prescribed in Section 1.5 of NUREG-0696. To help achieve this reliability goal, the TSC/PPC standby generator provides standby power to the SPDS/PPC in the event the normal plant supply and alternate power supply are lost.

6. The SPDS is a major subsystem of the DAEC Plant Process Computer (PPC). The PPC/SPDS data acquisition subsystem (DAS) interfaces with class 1E systems and the plant effluent monitoring system to acquire appropriate plant data. The PPC/SPDS is designed so that it can be operated, functionally tested, and calibrated without impacting the normal operation of Class IE equipment.

7. The DAS is designed to accommodate approximately 1100 inputs and has the capability for expansion to 2000 total inputs without requiring changeout of the base system DAS hardware.

8. The DAS is designed to accommodate both digital and analog inputs and outputs.

7.7.6.3 System Description

The SPDS consists of three subsystems: a data acquisition subsystem (DAS), a host processor subsystem, and a display terminal.

7.7.6.3.1 Data Acquisition Subsystem (DAS)

The DAS encompasses signal acquisition, analog-to-digital conversion, digital input/output, and communications with the host processor subsystem. The DAS interfaces with safety-related and non-safety-related signals and provides the required Class 1E electrical isolation and physical separation.

Six cabinets (Division I, Division II, and 4 nondivisional) mounted at remote and separate locations are configured to handle field input signals. The Division I and Division II portions of the DAS are Class 1E qualified hardware and will interface with safety-related signals. The nondivisional cabinet did not contain Class 1E qualified hardware and interface only with non-safety-related signals. Electrical isolation between the safety-related signals and the SPDS is accomplished by the use of fiber optic cable extending between the Division I and Division II cabinets and the host processor. The DAS acquires data from existing plant sensors and instrumentation, converts the signals from analog to digital, and transmits the digital data to the host processor subsystem.

7.7.6.3.2 Host Processor Subsystem

The host processor subsystem consists of program load facilities, a host processor, sufficient resident memory to support the processing needs of the PPC and SPDS, input/output device controllers, data storage facilities, and SPDS Display terminals. Communication controllers and modems required for communication and data transmission to and from the host processor subsystem and communication protocol and error-checking software are included. The PPC/SPDS software package provides for data acquisition, calculations, alarms, historical data retention, user interaction, and display. The host processor is a Digital Equipment Corporation VAX computer.

7.7.6.3.3 SPDS Display Terminal

Each SPDS display terminal includes the hardware and software necessary for accepting, formatting, and generating displays. Several SPDS display terminals are located in the Control Room and function to provide information to the personnel in the Control Room and communications with the SPDS. The terminal consists of a PC and monitor, with a keyboard/mouse interface for display requests.

Each SPDS display terminal contains its own microprocessor and user memory to store operational background displays.

There are three levels of display. A single top level (level 1) display provides an overview of plant safety status and contains five safety parameter blocks along with analog (vertical bar graph) and digital values for critical variables. The display presents a continuous indication of individual plant safety parameters.

There are five level 2 displays, one for each of the five safety parameters, that provide detailed information regarding the status of each parameter. These displays contain 30-min trend information for selected variables and status information (real-time digital values) for all variables associated with each safety parameter. The current values of trended variables are also displayed as vertical bar graphs along with digital values.

The level 3 displays are X-Y plots of two variables, for example:

1. TORUS LOAD LIMIT (torus level versus reactor pressure vessel pressure).

2. HEAT CAPACITY TEMPERATURE LIMIT (torus temperature versus reactor pressure vessel pressure).

Additional SPDS display terminals are located in the computer room and at other locations at the DAEC for display generation and/or modification, updating software, and display formatting. The Control Room terminal takes priority over all other display terminals in the system.

7.7.6.4 <u>Safety Parameters and Associated Variables</u>

7.7.6.4.1 Safety Parameters

Safety parameters are the quantitative and qualitative measures displayed by the SPDS to indicate the accomplishment or maintenance of critical safety functions. Information needed to assess the status of the plant safety parameters is obtained by the measurement of key plant variables. The safety parameters utilized by the SPDS to assess the maintenance or

accomplishment of the critical safety functions as required by NUREG-0737, Supplement 1, Section 4, are:

1. Reactivity control.

2. Reactor core cooling and heat removal.

3. Reactor coolant system integrity.

4. Containment conditions.

5. Radiation control.

7.7.6.4.2 Key Plant Variables

The key plant variables to be monitored in order to assess the status of each of the five safety parameters listed in Section 7.7.6.4.1 are listed in Table 7.7-1. The analog ranges of the displayed variables are listed in Table 7.7-2. In general, the ranges monitored by the SPDS are identical to those ranges monitored by existing control room instrumentation. All ranges displayed by the SPDS are adequate to cover plant responses analyzed in Chapter 15.

7.7.6.5 Emergency Operating Procedure Graphs

The Emergency Operating Procedure (EOPs) contain X-Y type graphs used to manually plot two plant variables. The SPDS aids the operator by displaying equivalent graphs and automatically plotting a time series of data points on each graph. The SPDS determines when the plotted point is in an undesirable region of the graph and provides a visual alarm indication.

7.7.7 ROD WORTH MINIMIZER (RWM) MICROCOMPUTER SYSTEM

7.7.7.1 Description

The RWM microcomputer system is a stand-alone microprocessor based system which provides the operator with an effective backup control rod monitoring routine that enforces adherence to established startup, shutdown, and low power level control rod procedures (see Section 7.7.7). The RWM microcomputer prevents the operator from establishing control rod patterns that are not consistent with prestored RWM sequences by initiating appropriate rod withdrawal block and rod insert block interlock signals to the reactor manual control system rod block circuitry (Figure 7.7-2, Sheet 5). The RWM sequences stored in the microcomputer memory are based on control rod withdrawal procedures designed to limit (and thereby minimize) individual control rod worths to acceptable levels as determined by the design-basis rod drop accident.

The RWM function does not interfere with normal reactor operation, and in the event of a system failure does not itself cause rod patterns to be established. The RWM function may be bypassed and its block function disabled only by specific procedural control initiated by the operator, in accordance with the DAEC Technical Specifications.

7.7.7.2 Rod Worth Minimizer Inputs

The following operator and sensor inputs are used by the rod worth minimizer:

1. Sequence

   The operator can select any one of four permissible sequences to be enforced by the computer.

   The operator is permitted to switch from sequence Al to A2 to Bl to B2 in any order when all rods are in and whenever the reactor is operating above the low power level setpoint.

2. Bypass/Operate/Test Mode

   A key-lock switch is provided to permit the operator to test or apply permissives to RWM rod block functions at any time during plant operation.

3. Control Rod Selected

   This input is binary coded identification of the control rod selected by the operator.

4. Control Rod Position

   This input is binary coded identification of all control rod positions.

5. Control Rod Drive Selected and Driving

   The RWM uses this input to annunciate rod movements when a rod is moving and is driven beyond insert and withdraw limits. Rod insert and withdraw blocks are applied whenever a rod is at its insert or withdraw limit, respectively. When a rod is being inserted and reaches a notch position less than or equal to its insert limit minus two, an annunciator output signal is generated at control room panel [redacted] When a rod is being withdrawn and reaches a notch position equal to or greater than its withdraw limit plus one, an annunciator output signal is generated at control room panel [redacted]

6. Control Rod Drift

The RWM program recognizes a position change of any control rod using the control rod drift signal input.

7. Reactor Power Level

Feedwater flow and steam flow signals are used to implement two digital inputs to permit program control of the RWM function. These two inputs, the low power setpoint and the low power alarm setpoint, were originally used to disable the RWM function at power levels above the intended service range of the RWM function. However, at the DAEC, rod worth control is now enforced at all power levels.

7.7.7.3 Rod Worth Minimizer Outputs

Isolated contact outputs to plant instrumentation provide RWM block functions to the reactor control system to permit or inhibit withdrawal, or insertion of a control rod. These actions do not affect any normal instrumentation displays associated with the selection of a control rod (Figure 7.7-2, Sheet 5).

7.7.7.4 Rod Worth Minimizer Indications

The RWM control panel provides the following indications:

1. Insert Error

Control rod coordinate identification for up to three rods causing insert errors.

2. Withdrawal Error

Control rod coordinate identification for up to two rods causing withdrawal errors.

3. Latched Step

Identification of the RWM sequence step number currently enforced by the microcomputer.

4. Latched Sequence

Indication of the RWM sequence (Al, A2, Bl or B2) currently being enforced by the microcomputer.

5. RWM Bypass

Indication that the rod worth minimizer is manually bypassed.

6. Insertion Block

Indication that an insertion block is in effect for the selected control rod.

7. Withdrawal Block

Indication that a withdrawal block is in effect for the selected control rod.

7.7.7.5 Design Objective

The Rod Worth Minimizer Microcomputer supplements procedural requirements for the control of rod worth during control rod manipulations when reactor startup or shutdown is in process.

7.7.7.6 Design Basis

The Rod Worth Minimizer Microcomputer provides inputs to the rod block circuitry to supplement and aid in the enforcement of procedural restrictions on preprogrammed control rod manipulations, which are designed to limit rod worth to the values assumed in the plant safety analyses.

7.7.7.7 Safety Evaluation

As described in the references cited in Chapter 15, discussion of the control rod drop accident, the maximum rod worth below 10% power assumed was 0.025 δk. The RWM operates to maintain the maximum rod worth below 0.01 δk. At power levels above 10% of rated power, the maximum rod worth possible was assumed in the control rod drop accident cases; thus, no rod worth control is required above 10% of rated power. However, at the DAEC, rod worth control is enforced at all power levels. Should the RWM be inoperative for any reason, the reactor operator can maintain acceptable rod worth by simply adhering to prescribed control rod patterns and sequences when below 10% of rated power. Also, whenever the RWM becomes inoperable during reactor startup or shutdown, a second reactor operator or other qualified member to the technical staff shall verify that the acceptable rod patterns and sequences are being adhered to.

7.7.7.8 Inspection and Testing

The Rod Worth Minimizer system is self checking. It performs diagnostic checks to determine the operability of certain portions of the system hardware, and it performs internal programming checks to verify that input signals and selected program computations are either within specific limits or within reasonable bounds. The Rod Worth Minimizer computer on-line diagnostic test shall be successfully performed.

7.7.7.9 Diagnostics Available for RWM

7.7.7.9.1 RWM Failure Detection

The software system determines the integrity of the RWM system hardware and software. The system performs various tests at the time of initialization. All errors and failures detected by the tests are reported by illuminating messages on the RWM Operator's Display. The RWM also sends messages to the Plant Process Computer.

7.7.7.9.2 RWM Computer Stall Indication

The RWM computer closes and opens a contact output to retrigger a stall timer at least once every 0.1 seconds. The stall alarm open/close contact is connected to the plant annunciator system.

REFERENCES FOR SECTION 7.7

1. NRC Generic Letter 94-02, "Long-Term Solutions and Upgrades of Interim Operating Recommendations for Thermal-Hydraulic Instabilities in Boiling Water Reactors," dated July 11, 1994.

2. Amendment No. 215 to Facility Operating License No. DPR-49 Duane Arnold Energy Center, dated August 7, 1996.

Table 7.7-1

SAFETY PARAMETER DISPLAY SYSTEM
SAFETY PARAMETERS AND ASSOCIATED
KEY PLANT VARIABLES

Safety Parameter	Variables
Reactivity control	Source range monitor power
	Average power range monitor power
	Average power range monitor bypass switch position
	Source range monitor power position
	Scram signal
	All-rods-in indication
	Standby liquid control tank level
	Standby liquid control system discharge header pressure
	Automatic depressurization system
	Train A times initiation
	Train A time to activation
	Train B timer initiation
	Train B time to activation
	Safety/relief valve position
	Reactor vessel water level
	Reactor vessel pressure
	Total core flow

Table 7.7-1

SAFETY PARAMETER DISPLAY SYSTEM
SAFETY PARAMETERS AND ASSOCIATED
KEY PLANT VARIABLES

Safety Parameter	Variables
Reactivity control (continued)	Torus water temperature
Reactor core cooling	Reactor vessel water level
	Average power range monitor power
	Average power range monitor bypass switch position
	Total core flow
	Safety/relief valve position
	RCIC flow
	RCIC injection valve position
	HPCI flow
	HPCI injection valve position
	Core Spray
	Loop A flow
	Loop B flow
	Loop A injection valve position
	Loop B injection valve position
	LPCI
	Loop A flow

Table 7.7-1

SAFETY PARAMETER DISPLAY SYSTEM
SAFETY PARAMETERS AND ASSOCIATED
KEY PLANT VARIABLES

Safety Parameter	Variables
Reactor core cooling (continued)	Loop B flow
	Loop A injection valve position
	Loop B injection valve position
	Feedwater flow
	Reactor vessel pressure
	Condensate storage tanks level
	Torus water level
Reactor coolant system integrity	Drywell pressure
	Drywell temperature
	Reactor vessel pressure
	Reactor vessel water level
	Main steam isolation valves position
	Safety/relief and safety valves position
	Automatic depressurization system
	Train A timer initiated
	Train A time to activation
	Train B timer initiated
	Train B time to activation

Table 7.7-1

SAFETY PARAMETER DISPLAY SYSTEM
SAFETY PARAMETERS AND ASSOCIATED
KEY PLANT VARIABLES

Safety Parameter	Variables
Reactor coolant system integrity (continued)	Leakage rate to drywell flow sump
	Leakage rate to equipment drain sump
Containment conditions	Drywell pressure
	Drywell temperature
	Torus water level
	Torus water temperature
	Main steam isolation valves position
	Safety/relief valve position
	Safety valve position
	Drywell O_2 concentration
	Torus O_2 concentration
	Drywell H_2 concentration
	Torus H_2 concentration
	isolation valve group initiation and isolation valve group number
Radioactivity control	Offgas stack activity
	Reactor building exhaust ventilation activity
	Turbine building exhaust ventilation activity
	Containment high-range radiation level

Table 7.7-1

SAFETY PARAMETER DISPLAY SYSTEM
SAFETY PARAMETERS AND ASSOCIATED
KEY PLANT VARIABLES

Safety Parameter	Variables
Radioactivity control (continued)	Reactor building closed cooling water activity
	Residual heat removal heat exchanger service water outlet activity
	General service water activity
	Post-treatment offgas activity
	Pretreatment offgas activity

Table 7.7-2

Sheet 1 of 2

SAFETY PARAMETER DISPLAY SYSTEM KEY PLANT VARIABLES RANGES	
DISPLAYED VARIABLE	DISPLAYED RANGE
Reactor power (APRMs)	0% to 125%
Reactor power (SRMs)	0 to 10^6 cps
Reactor vessel water level[a]	-100 in. to 218 in.
Drywell pressure	-5 to 250 psig
Drywell temperature	0 to 350˚F
Drywell O_2 concentration	0 to 20%
Drywell H_2 concentration	0 to 10%
Torus O_2 concentration	0 to 20%
Torus H_2 concentration	0 to 10%
Torus water temperature	50˚F to 250˚F
Torus water level	1.5 to 30 ft.
RCIC flow	0 to 500 gpm
HPCI flow	0 to 3500 gpm
Residual heat removal flow (LPCI)	0 to 15,000 gpm
Core spray flow (loops A and B)	0 to 5000 gpm
Feedwater flow (loops A and B)	0 to 5 x 10^6 lbm/hr (for each loop)
Total core flow	0 to 60 x 10^6 lbm/hr
Condensate storage tanks level	0 to 24 ft.
Standby liquid control tank level	0 to 100% (82.5 in.)
Standby liquid control system pressure	0 to 1800 psig
Leakage rate to drywell floor sump	0 to 120 gpm
Leakage rate to equipment drain sump	0 to 120 gpm

[a] Zero is referenced to top of active fuel

Table 7.7-2

Sheet 2 of 2

SAFETY PARAMETER DISPLAY SYSTEM KEY PLANT VARIABLES RANGES	
DISPLAYED VARIABLE	DISPLAYED RANGE
Automatic depressurization system train A time	0 to 120 sec
Automatic depressurization system train B time	0 to 120 sec
Containment radiation monitor	1 to 10^7 R/hr
Reactor building exhaust ventilation activity	10^{-7} to 10^5 ↘Ci/cm^3
Station Offgas stack activity	10^{-7} to 10^5 ↘Ci/cm^3
Reactor building closed cooling water activity[c]	0.1 to 10^6 cps
RHR heat exchanger service water outlet activity	0.1 to 10^6 cps
Turbine building exhaust ventilation activity	10^{-7} to 10^5 ↘Ci/cm^3
Offgas system pretreatment activity	0.1 to 10^6 cps
Offgas system post-treatment activity	0.1 to 10^6 cps
General service water activity	0.1 to 10^6 cps

[c] cps represents counts per second

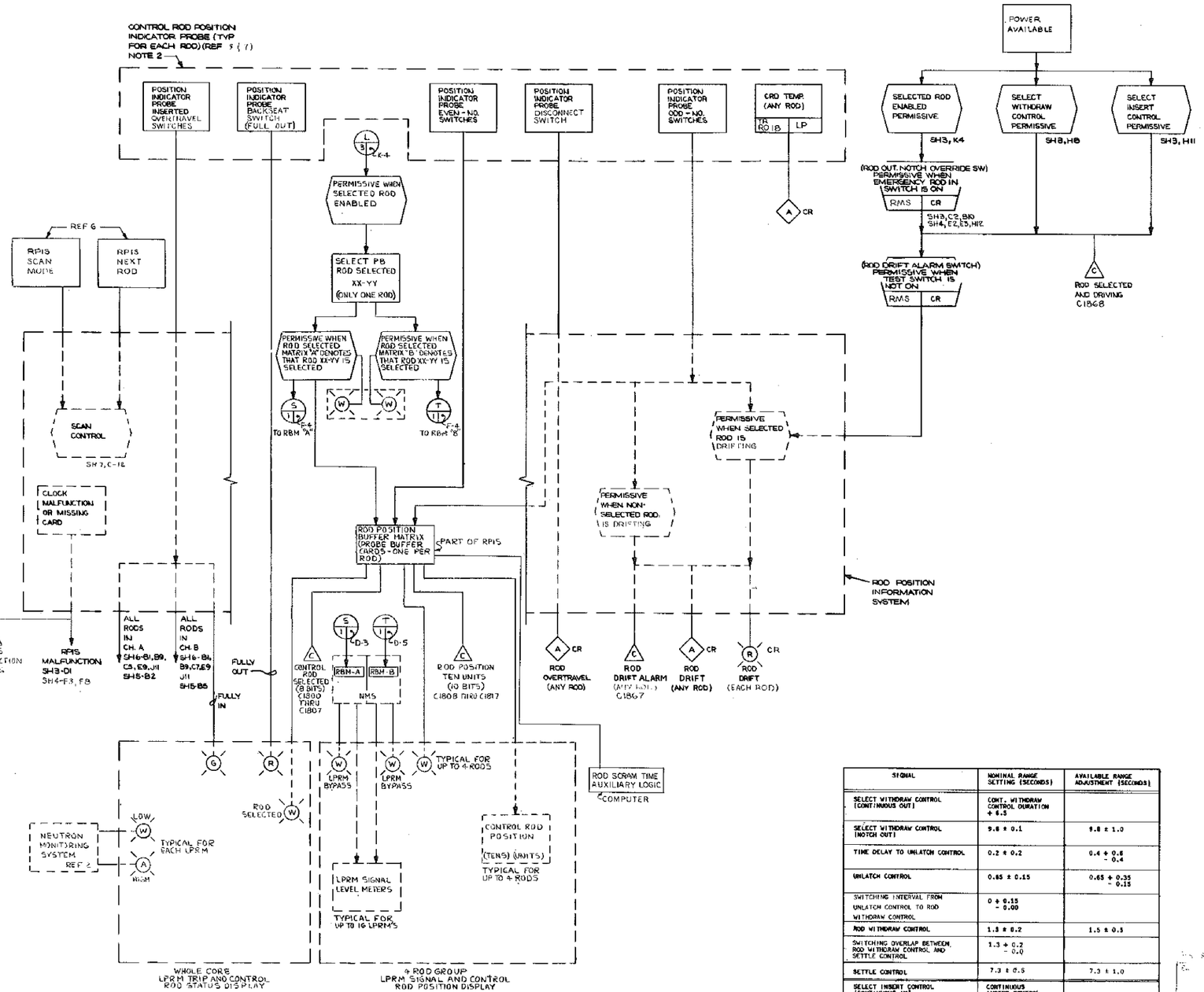

NOTES:

1. THE ROD CIRCUIT SHALL BE DESIGNED TO INSURE THAT:
   A. ONLY ONE ROD MAY BE SELECTED AT A TIME
   B. WHEN MOVEMENT IS INITIATED, THE SELECTED ROD SHALL BE SEALED IN TO INHIBIT SELECTION OF ANOTHER ROD DURING THE MOVEMENT CYCLE (EXCEPT FOR LOSS OF CONTROL CIRCUIT POWER).
2. EACH CONTROL ROD, AS IT TRAVELS UP (INSERTED) OR DOWN (WITHDRAWN) PASSES A NUMBER OF SWITCHES. THE TOP TWO POSITION SWITCHES ARE CALLED "OVER TRAVEL" AND THE BOTTOM TWO POSITIONS ARE CALLED "WITHDRAWN" (BACKSEAT & DISCONNECT). SWITCHES IN BETWEEN ARE DIVIDED INTO ODD (DRIFT) AND EVEN (LATCH) POSITIONS. AS THE ROD TRAVELS OVER ANY SWITCH AN INDICATING SIGNAL IS ACTUATED.
3. FOR LOCATION AND IDENTIFICATION OF INSTRUMENTS SEE INSTRUMENT DATA SHEET LISTED IN MPL FOR EACH INSTRUMENT.

NOTE
SYSTEM SELECTION OPTIONS ARE INDICATED BY MULTIPLE ITEM NUMBERS

REFERENCE DOCUMENTS:	MPL ITEM NO.
1. CONTROL ROD DRIVE HYD SYSTEM F&ID	C11-1010
2. NEUTRON MONITORING SYSTEM FSD	C51-1010
3. FEEDWATER CONTROL SYSTEM FED	C32-1110
4. FEEDWATER CONT SYS DESIGN SPEC.	C12-4010
5. CONTROL ROD DRIVE HYD SYS DESIGN SPEC	C11-4010
6. PROCESS COMPUTER SYS INPUT/OUTPUT REQUIREMENTS	C99-4010
7. POSITION INDICATOR PROBE CONNECTION DIAGRAM	1408356
8. LOGIC SYMBOLS	A41-1030
9. NEUTRON MONITORING SYSTEM PID	C51-1020
10. REACTOR PROTECTION SYSTEM FED	C71-1110
11. PIPING & INSTRUMENT SYMBOLS	A41-1010

LEGEND:

- ✱ = SWITCHGEAR DEVICE FUNCTION NUMBER (ANSI SPEC. C37.2)
- RMM = ROD WORTH MINIMIZER
- LPRM = LOCAL POWER RANGE MONITOR
- RPIS = ROD POSITION INFORMATION SYSTEM
- Ⓒ = INPUT TO COMPUTER
- NMS = NEUTRON MONITORING SYSTEM
- APRM = AVERAGE POWER RANGE MONITOR
- RBM = ROD BLOCK MONITOR
- IRM = INTERMEDIATE RANGE MONITOR

SIGNAL	NOMINAL RANGE SETTING (SECONDS)	AVAILABLE RANGE ADJUSTMENT (SECONDS)
SELECT WITHDRAW CONTROL (CONTINUOUS OUT)	CONT. WITHDRAW CONTROL DURATION + 6.5	
SELECT WITHDRAW CONTROL (NOTCH OUT)	9.8 ± 0.1	9.8 ± 1.0
TIME DELAY TO UNLATCH CONTROL	0.2 ± 0.2	0.4 + 0.6 − 0.4
UNLATCH CONTROL	0.65 ± 0.15	0.65 + 0.35 − 0.15
SWITCHING INTERVAL FROM UNLATCH CONTROL TO ROD WITHDRAW CONTROL	0 + 0.15 − 0.00	
ROD WITHDRAW CONTROL	1.3 ± 0.2	1.5 ± 0.3
SWITCHING OVERLAP BETWEEN ROD WITHDRAW CONTROL AND SETTLE CONTROL	1.3 + 0.2 − 0.0	
SETTLE CONTROL	7.3 ± 0.5	7.3 ± 1.0
SELECT INSERT CONTROL (CONTINUOUS IN)	CONTINUOUS INSERT CONTROL DURATION + 5.0	
SELECT INSERT CONTROL (NOTCH IN)	9.0 + 0.9 − 0.1	9.0 ± 1.0
TIME DELAY TO ROD INSERT CONTROL	0.4 ± 0.2	0.4 + 0.6 − 0.4
ROD INSERT CONTROL	2.9 ± 0.2	2.9 + 0.6 − 0.4
SWITCHING OVERLAP BETWEEN ROD INSERT CONTROL AND SETTLE CONTROL	1.3 + 0.2 − 0.0	
SETTLE CONTROL	5.8 ± 0.5	5.8 ± 1.5

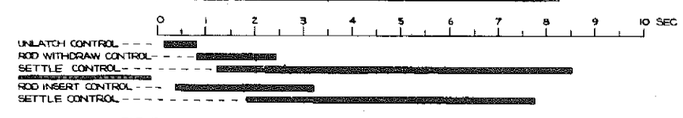

TABLE I FUNCTIONS OF CONTROL ROD TIMING

DUANE ARNOLD ENERGY CENTER
IOWA ELECTRIC LIGHT & POWER COMPANY
UPDATED FINAL SAFETY ANALYSIS REPORT

FCD, Control Rod Drive Hydraulic System

Figure 7.7-2, Sheet 1

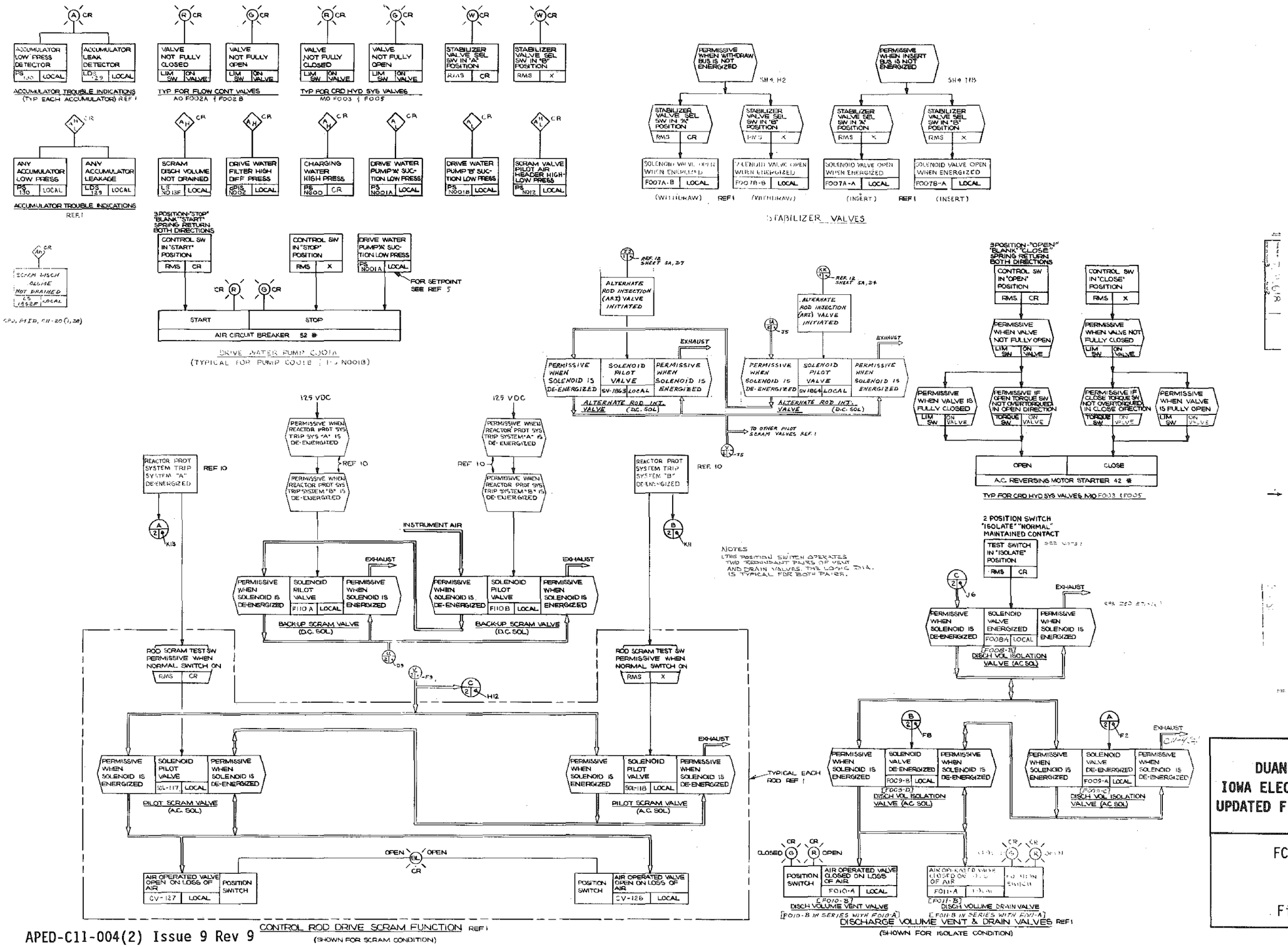

DUANE ARNOLD ENERGY CENTER
IOWA ELECTRIC LIGHT & POWER COMPANY
UPDATED FINAL SAFETY ANALYSIS REPORT

FCD, Control Rod Drive Hydraulic System

Figure 7.7-2, Sheet 2

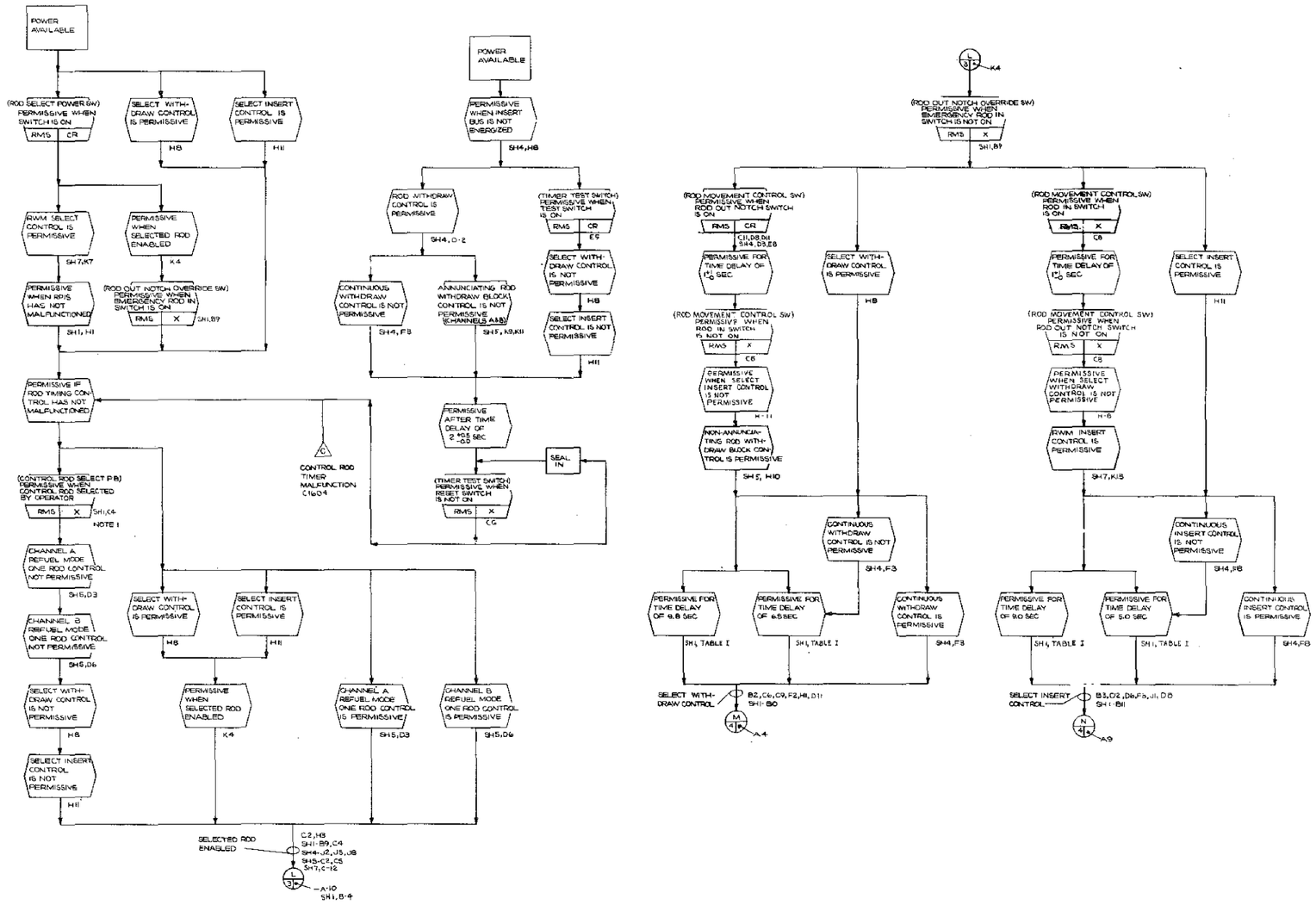

APED-C11-4(3)-4 Rev 6

DUANE ARNOLD ENERGY CENTER
IOWA ELECTRIC LIGHT & POWER COMPANY
UPDATED FINAL SAFETY ANALYSIS REPORT

CRD Hydraulic System - FCD

Figure 7.7-2, Sheet 3

Revision 1 - 6/83

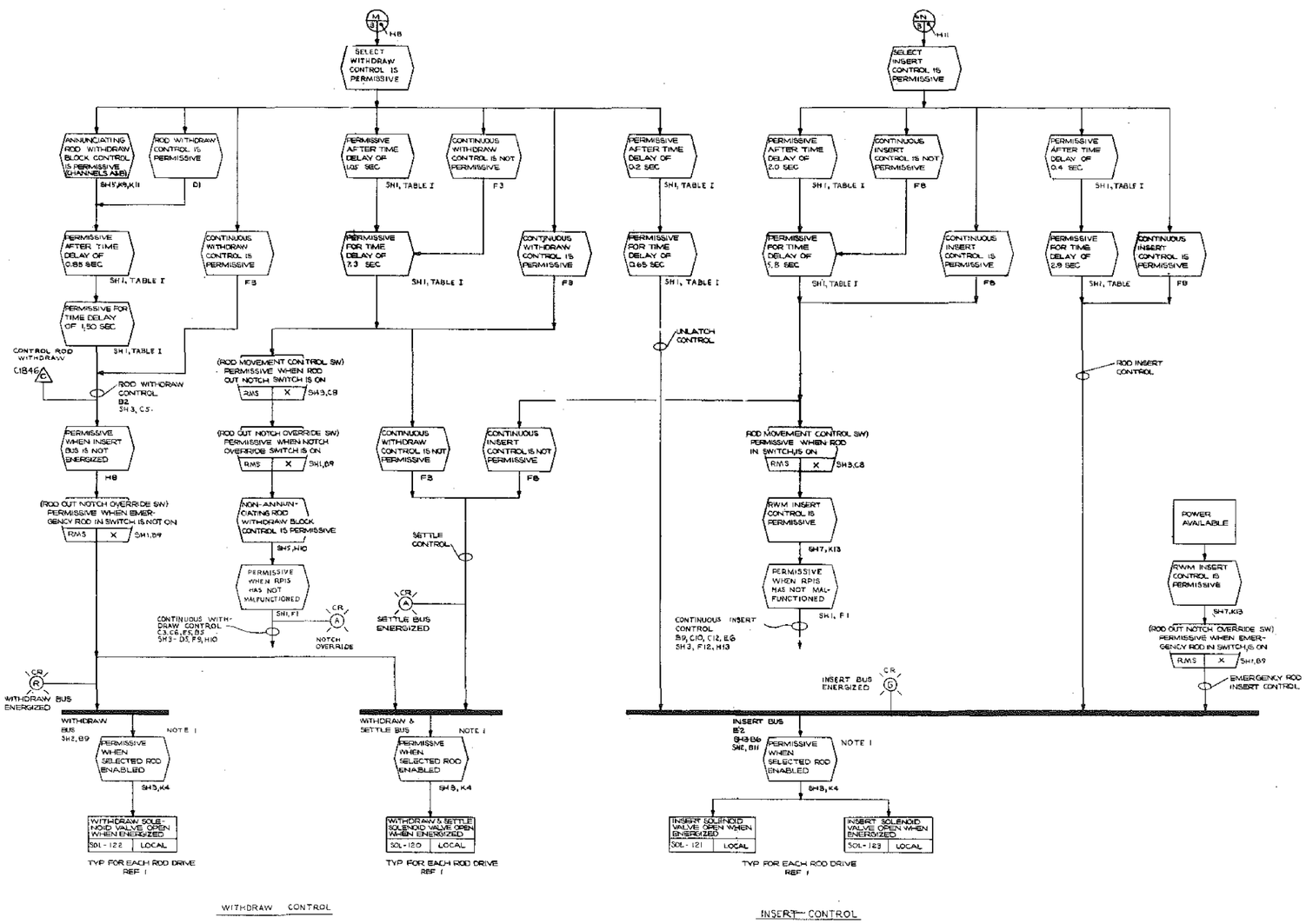

APED-C11-4(4)-4 Rev 6

DUANE ARNOLD ENERGY CENTER
IOWA ELECTRIC LIGHT & POWER COMPANY
UPDATED FINAL SAFETY ANALYSIS REPORT

CRD Hydraulic System - FCD

Figure 7.7-2, Sheet 4

Revision 1 - 6/83

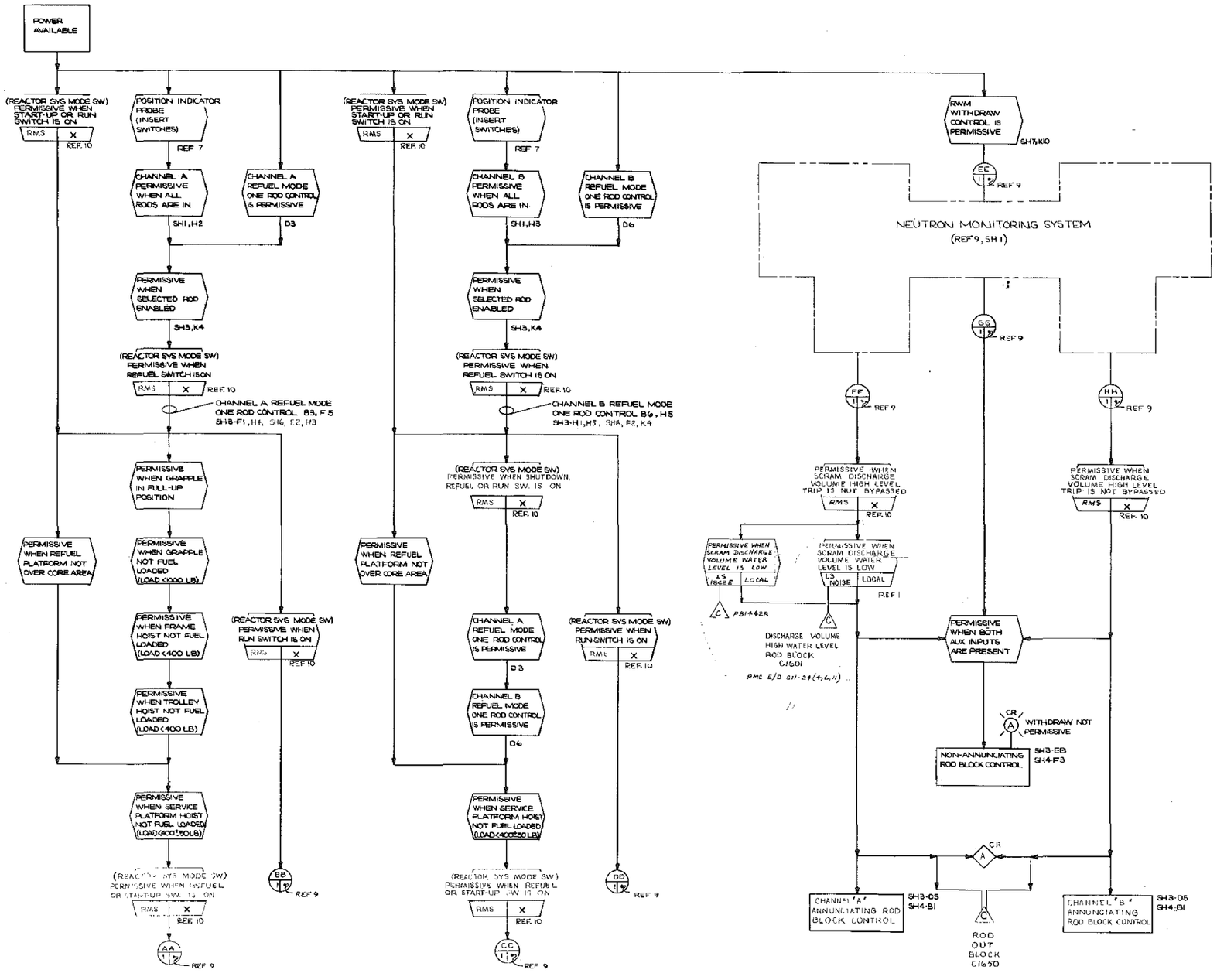

DUANE ARNOLD ENERGY CENTER
IOWA ELECTRIC LIGHT & POWER COMPANY
UPDATED FINAL SAFETY ANALYSIS REPORT

FCD, Control Rod Drive
Hydraulic System

Figure 7.7-2, Sheet 5

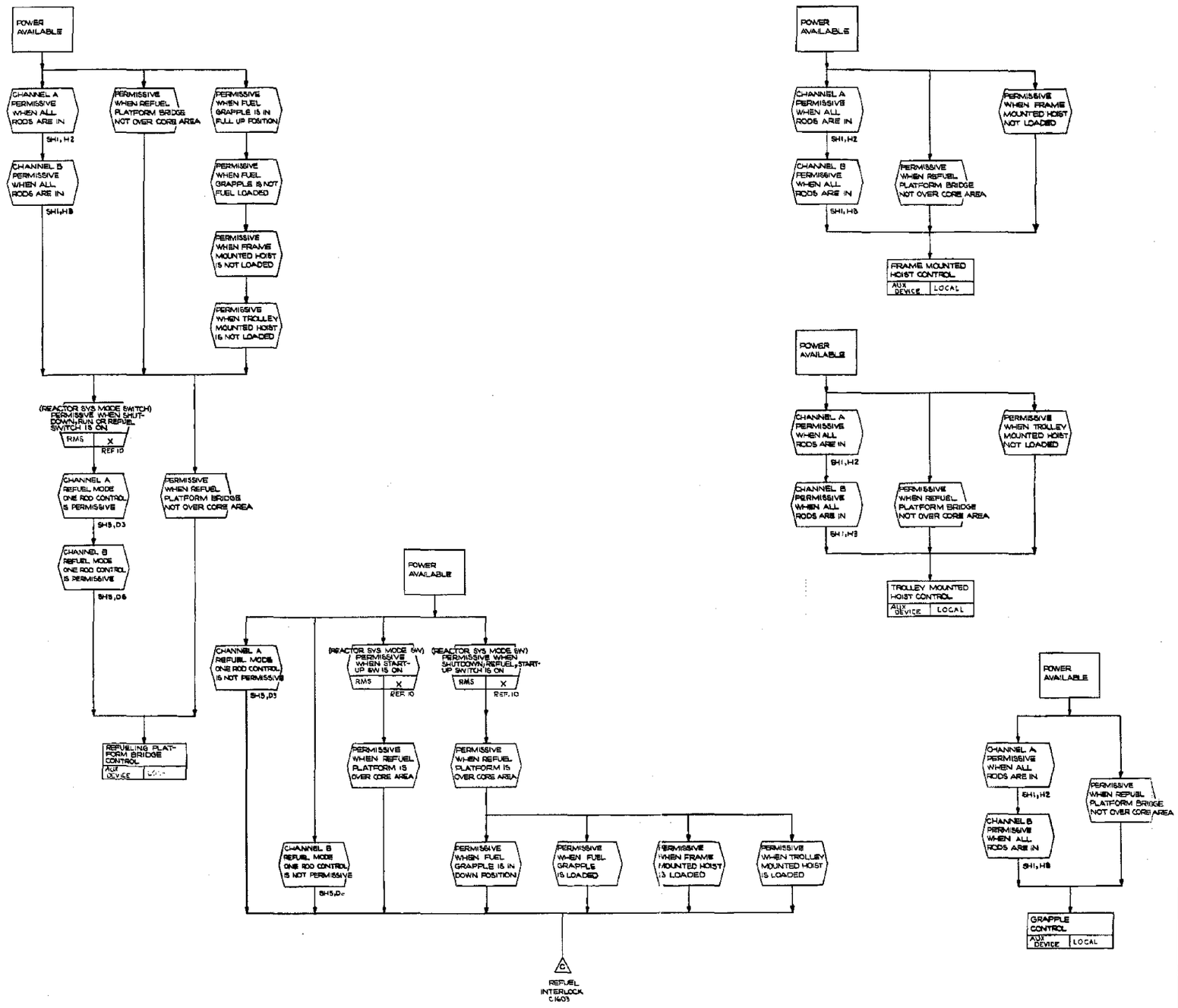

DUANE ARNOLD ENERGY CENTER
IES UTILITIES
UPDATED FINAL SAFETY ANALYSIS REPORT

CRD HYDRAULIC SYSTEM- FCD

FIGURE 7.7-2 SH. 6

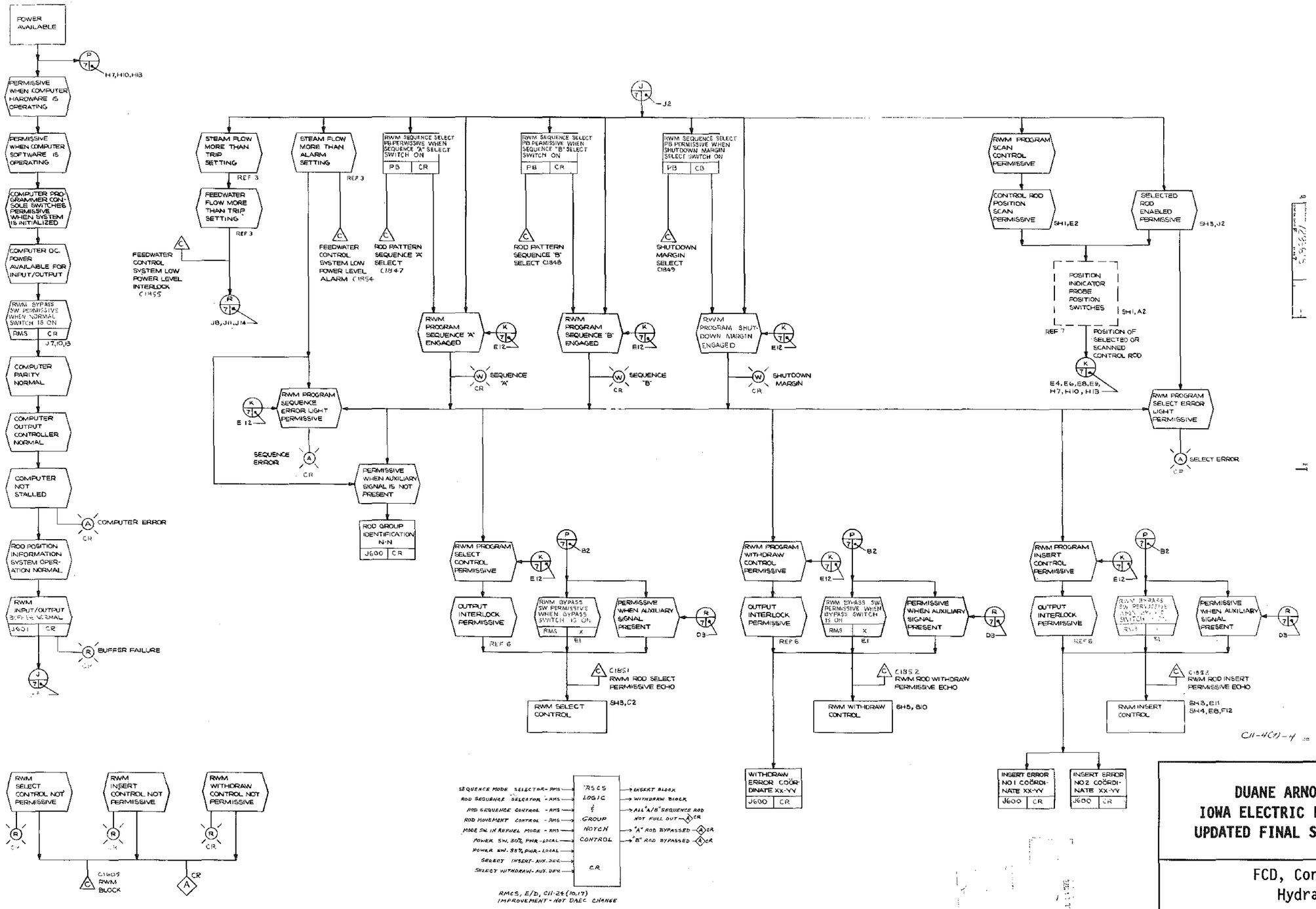

DUANE ARNOLD ENERGY CENTER
IOWA ELECTRIC LIGHT & POWER COMPANY
UPDATED FINAL SAFETY ANALYSIS REPORT

FCD, Control Rod Drive Hydraulic System

Figure 7.7-2, Sheet 7

[redacted]

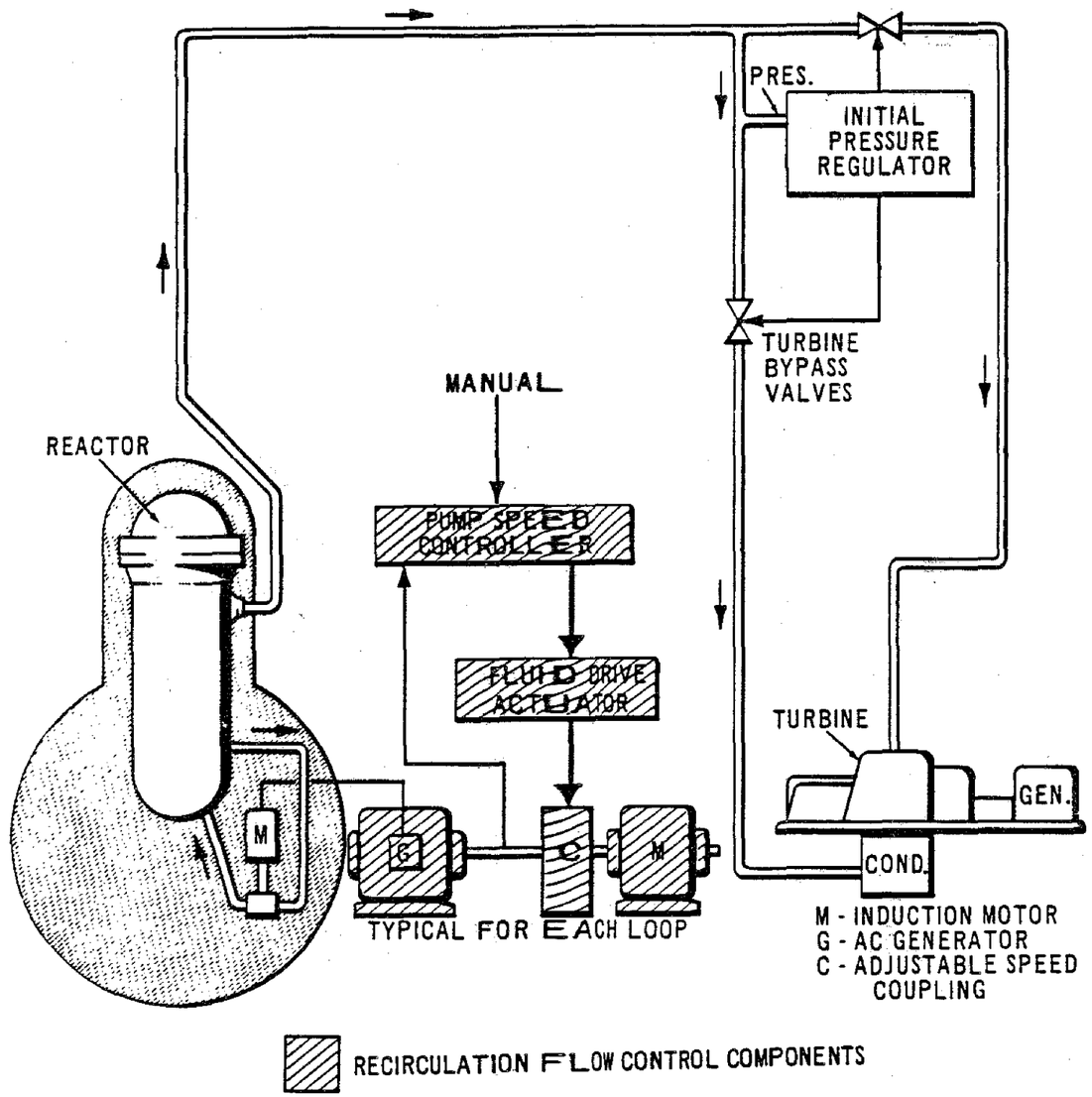

DUANE ARNOLD ENERGY CENTER
IOWA ELECTRIC LIGHT & POWER COMPANY
UPDATED FINAL SAFETY ANALYSIS REPORT

Recirculation Flow Control Illustration

Figure 7.7-6