PSEG

Public Service Electric and Gas Company 80 Park Place Newark, N.J. 07101 Phone 201/430-7000

October 26, 1977

Director of Nuclear Reactor Regulation
U. S. Nuclear Regulatory Commission
Washington, D. C. 20555

Attention: Mr. George Lear, Chief
Operating Reactors Branch 3
Division of Operating Reactors

Gentlemen:

OVERPRESSURE PROTECTION
NO. 1 UNIT
SALEM NUCLEAR GENERATING STATION
DOCKET NO. 50-272

By our letter of March 25, 1977, Public Service committed to the installation of an interim system to prevent reactor pressure overpressurization by December 31, 1977 and to have a final system installed by the end of the first refueling outage. Enclosed is a report of the design which will meet both of these commitments and which we plan to have operational by December 31, 1977.

Should you have any questions concerning this report, we will be pleased to discuss them with you.

Very truly yours,

F. P. Librizzi
General Manager -
Electric Production

Encl.

P77 98 39

773000213

REACTOR COOLANT SYSTEM OVERPRESSURIZATION
OVERPRESSURE PROTECTION
NO. 1 UNIT
SALEM NUCLEAR GENERATING STATION
DOCKET NO. 50-272

TABLE OF CONTENTS

LIST OF FIGURES

LIST OF TABLES

I. Pressure Transient Analysis

Examination of past and postulated Reactor Coolant System overpressurization events of recent concern has resulted in the identification of two basic types of overpressurization mechanisms. They are categorized as mass input and heat input. For the mass input case the most severe transient has been identified as the inadvertent starting of a Safety Injection Pump, due to its high flow capacity. For the heat input case, the most severe transient is the inadvertent starting of a Reactor Coolant Pump with the presence of a significant temperature differential between the Reactor Coolant System and the Steam Generator in the affected loop.

Background and justification for the above determination are described further in Appendix A of this report.

A. Mass Input Case

The Reactor Coolant System pressure transient to be expected in the Salem Plant for the identified worst case mass input incident was calculated in accordance with the algorithm described in Appendix A. Using the assumptions, inherent in that algorithm, the peak mass input induced pressure was calculated at 446 psig. This peak pressure transient is a function of mass input rate, valve setpoint, valve opening time, RCS volume and the assumption that only one relief valve is available. The peak pressure transient when compared to the 13EFPY (Effective Full Power Years) Pressure Temperature limit curves (Figures 1 and 2), is within limits down to a reactor coolant temperature of 180°F during heatup and 150°F during cooldown. Below these temperatures the peak pressure exceeds the Technical Specification curves by 20 and 46 psig, respectively.

There are several compelling reasons to believe that the actual pressure transients which would be experienced in the worst case would not exceed the pressure limits of 10CFR50 Appendix G even though slight infringement on the Technical Specification curves is indicated. These reasons are as follows:

(1) The calculation of the pressure transient was based on the use of a single pressurizer relief valve. The Salem Pressurizer Overpressure Protection System (POPS), provides for actuation of a second pressurizer relief valve and the use of the RHR suction line relief

(1) (Cont'd)

valve (which has a comparable capacity and the same setpoint).

The effect on overpressurization of the second pressurizer relief valve was not calculated for the Salem Plant due to the unavailability of an appropriate algorithm in Appendix A. It should be noted, however, that sensitivity studies conducted by Westinghouse for a 6,000 cubic foot plant showed that the addition of a second pressurizer relief valve reduced the over-pressurization (and, hence, the peak pressure) by 30 psi.

(2) The pressure transient calculated was based on pressurizer relief valve opening time. Sensitivity studies performed by Westinghouse indicated that the pressure transient is extremely sensitive to relief valve opening times, i.e. the quicker acting the valve, the more effective it is in mitigating the pressure transient. In comparison, the RHR relief valve opens within a fraction of a second whereas the pressurizer relief valves open in two seconds. Thus, given the expected availability of the RHR suction relief valve, a significantly lower peak is indicated.

(3) The reference parameter algorithm (Appendix A) was developed using conservative bounding input parameters and parameter sensitivity studies which provided a linearized method for calculating a plant specific analysis. As a result of the assumptions made and the linearization method used for the bounding algorithm, pressure transient calculations yield greater magnitudes than would be realized under actual process conditions, and are therefore conservative.

(4) The Technical Specification Curves include significant conservatisms in both temperature and pressure to account for instrument error.

B. Heat Input Case

The calculations for the heat input case were performed in accordance with the supplement to the Westinghouse Report (Appendix A). The peak pressure transient was calculated by interpolating combinations of the following variables; relief valve setpoint, relief valve opening time, reactor coolant system volume and steam generator heat transfer area. In all cases, the calculated peak pressure was less than the worst case previously described under Mass Input Case.

II. SYSTEM DESCRIPTION AND DESIGN CRITERIA

The POPS is a two-train overpressurization mitigating system which uses separate and independent pressure transmitters to open the two pressurizer power operated relief valves (1PR1 and 1PR2) in the event Reactor Coolant System Pressure exceeds the preset value of 375 psi. This automatic action takes place provided the system has been armed by placing two key-locked pushbuttons in the "ON" position as shown in Figures 3 thru 7. The system will be armed whenever the reactor coolant system is below 312°F.

Each relief valve is actuated by its own logic relay which is energized by a bistable device. The bistable is energized when reactor coolant pressure exceeds the setpoint. Existing installed pressure sensors are used to develop the signal for valve actuation. These are the same sensors which provide automatic closure of the RHR suction paths at 600 psi.

Operation of the POPS is governed by two administratively controlled, keylocked pushbuttons which perform three functions. When the Reactor Coolant System temperature is less than 312°F, the system is armed by depressing the "ON" pushbutton for each POPS train. An actuation signal to open the motor operated valves upstream of the relief valves is initiated as well as an alarm to indicate that the POPS is armed if temperature should subsequently increase above 312°F. In this mode of operation, the relief valve will be opened automatically if Reactor Coolant System pressure exceeds 375 psi.

When Reactor Coolant System temperature increases above 312°F, the "OFF" pushbutton for each POPS train is depressed. This action removes the opening permissive signal to the relief valve, removes the opening signal from the associated motor operated valve, and provides an alarm to indicate that the system is disarmed if temperature is subsequently decreased below 312°F. Upon actuation, the valves will open and will reset when system pressure decreases below 375 psi.

Reactor Coolant System pressure and temperature instrumentation are provided which enable the operator to monitor the above parameters. An alarm is provided on the main control console to inform the operator of a POPS system initiation. Valve position indicating lights inform the operator that the valves have opened. In addition, a computer generated alarm informs the operator of an impending pressure excursion beyond the Technical Specification limits.

Testing provisions in the POPS circuitry allow for test opening of the relief valves prior to arming of the system below 312°F. The "TEST" pushbutton, when depressed, will operate the relief valve provided that the associated upstream motor operated valve is closed. Other portions of the POPS can be tested in a manner similar to other plant protection systems.

This design meets the four design criteria established in the NRC's November 17, 1976 letter.

(1) "Credit for Operator Action" - No credit can be taken for operator action until 10 minutes after the operator is aware that a pressure transient is in progress.

The POPS requires no operator action other than to arm the system prior to operation with reactor coolant system temperature less than 312°F. All protective action is performed automatically.

(2) "Single Failure Criteria" - The pressure protection system should be designed to protect the vessel given a single failure that initiates the pressure transient. In this area redundant or diverse pressure protection systems would be considered as meeting the single failure criteria.

The POPS incorporates redundancy and separation of pressure transmitters, logic, and valves in a channelized system. Single failures within the POPS will not defeat the safety function. Single failures which are capable of initiating a pressure transient cannot cause failures in the POPS which would render it unable to provide protection.

(3) "Testability" - The equipment design should include some provision for testing on a schedule consistent with the frequency that the system is used for pressure protection.

The POPS design provides for testing of the analog circuitry any time the RHR suction valves from the Reactor Coolant System are closed. The relief valves 1PR1 and 1PR2 can be tested prior to entry into a water-solid condition by use of the POPS functional test pushbutton. The POPS is designed to function during low temperature, low pressure operating conditions and therefore, periodic testing of the system during power operation is not planned.

(4) "Seismic Design and IEEE 279 Criteria" - Ideally, the pressure protection system should meet both seismic category 1 and IEEE 279 criteria. The basic objective, however, is that the system should not be vulnerable to an event which both causes a pressure transient and causes a failure of equipment needed to terminate the transient.

The POPS design meets seismic Category I criteria for all equipment required to open the relief valves. The instrumentation and actuating circuitry meet the applicable requirements of IEEE 279 - 1971, provided the system is armed by the operator.

III. DESIGN EVALUATION

The POPS is designed as a "protection grade" system in accordance with the applicable portions of IEEE 279 - 1971. The use of proven devices provides assurance that the system is compatible with other protection system equipment. The use of administrative controls to arm the POPS is considered acceptable due to the infrequency of low pressure, low temperature operation.

The effects of various failures have been considered in the POPS design. These failures considered include "loss of control air" and "loss of station power." Failures within the POPS cannot cause a loss of protective function, due to the two-train design, and failures capable of causing an overpressurization event cannot cause failures within the POPS or prevent operation of the system.

The "loss of air" situation is provided for by provision of an air accumulator for each relief valve. The accumulators are sized to provide control air for up to 100 cycles of valve opening and closing. The accumulators are designed to seismic Category I requirements. The air accumulators are provided with an alarm which will alert the operator to a low air pressure condition. The accumulator design thus precludes a total loss of control air to the relief valves.

A "loss of station power" will not affect the POPS since the protection logic power is provided by inverters and control power for the relief valves originates at the batteries.

In the event that one relief valve were to open on a false signal or transmitter failure at a time when protection is not required, a depressurization of the Reactor Coolant System would occur. Any such depressurization would be less severe than those analyzed in FSAR Section 14.1.2. The discharge through the relief valve can be terminated by operator action, thus minimizing the effects of the transient.

IV. ADMINISTRATIVE CONTROLS

The following components and conditions have Administrative Controls placed on them to prevent any overpressurizing of the reactor coolant system.

(1) A reactor coolant pump is not to be started unless there is a bubble in the pressurizer, except when filling and venting the Reactor Coolant System. It can be jogged for 1 to 1 1/2 minutes while venting the system (OI's II-1.3.1 and II-1.3.4).

(2) To prevent the accidental starting of a safety injection or charging pump when RCS temperature is below 350°F, the power supplies to both safety injection pumps and to one centrifugal charging pump are deenergized and racked out.

Additionally, when the RCS temperature is reduced below 200°F, the remaining centrifugal charging pump's electrical supply will be deenergized and racked out. (OI-I-3.6)

V. CONCLUSION

In summary, we believe that the material presented in this report meets all of the NRC staff's concerns related to overpressurization incidents. This system described herein provides satisfactory overpressure protection during low pressure, low temperature operation for both water solid and non-solid modes of operation, up to 312°F.

RWS:jk

TABLE I
COMPARISON OF SALEM AND WESTINGHOUSE REFERENCE PARAMETERS

	Westinghouse "reference" plant	Actual Salem plant
A. GENERAL		
1. RCS volume, ft^3	13,000	12,800
2. Pressurizer relief valve		
a. opening time, sec.	3	2
b. rating @ 1 psig	50 gpm @ 60°F	55 gpm @ 60°F
c. size, inches	2	2
d. plug characteristic	linear	linear
3. RHR suction relief valve		
a. opening time, sec.	not considered	$\ll 1$
b. rating @ setpoint of 375 psig + 10% accumulation	not considered	900 gpm @ 60°F
c. size, inches	not considered	3
d. type	not considered	spring relief valve
B. MASS INPUT		
1. SI pump input @ 375 psig	129.3 lb/sec	108.4 lb/sec

	Westinghouse Lower Limit	Salem	Westinghouse Upper Limit
C. HEAT INPUT			
1. Relief Valve Setpoint, psig (s)	350	375	400
2. Relief Valve Opening Time, sec (ΔT)	1.5	2.0	3.0
3. Reactor Coolant System Volume ft^3 (VRCS)	6,000	12,800	13,000
4. Steam Generator Heat Transfer area, ft^2	-	51,500	58,000

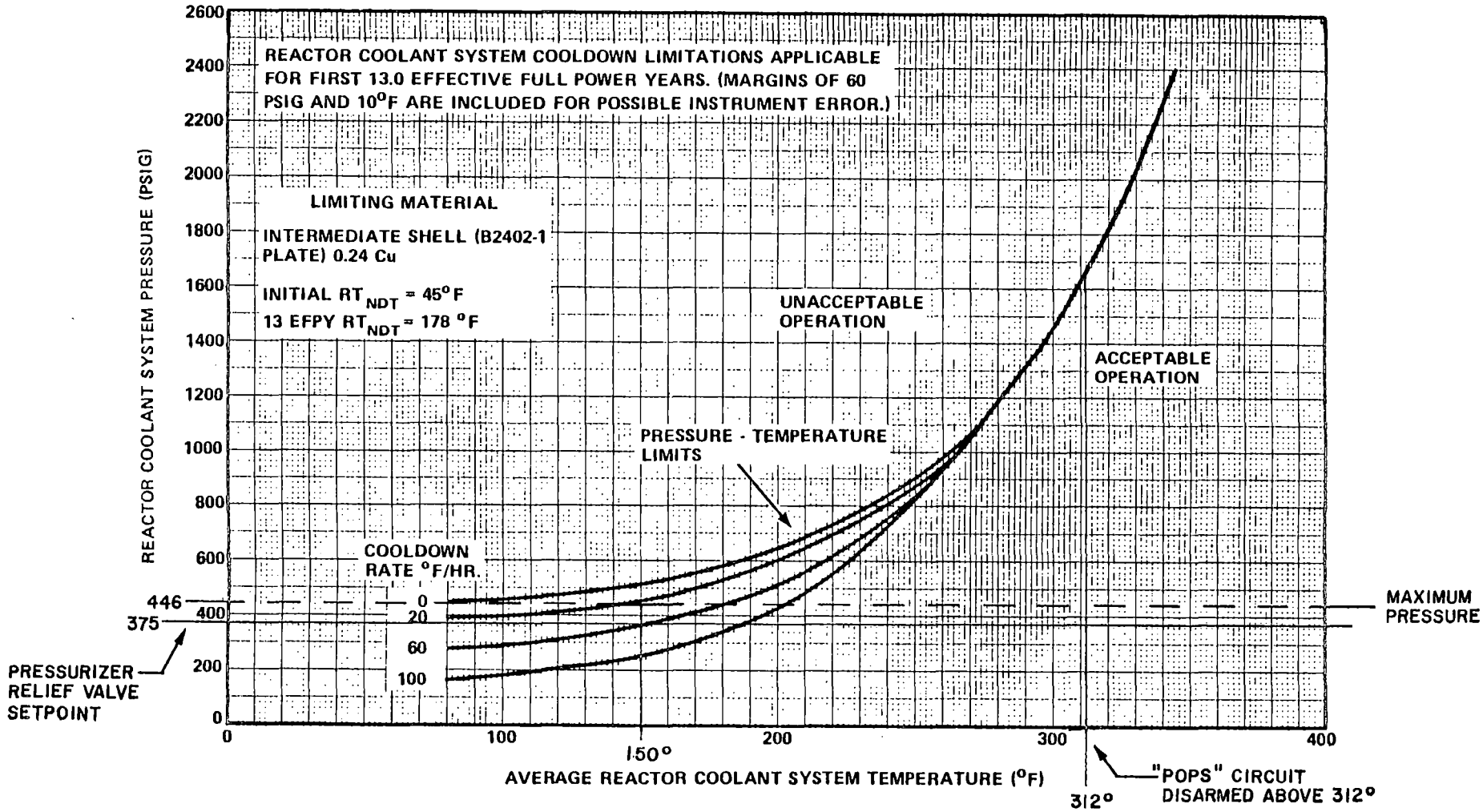

REACTOR COOLANT SYSTEM PRESSURE – TEMPERATURE LIMITS VERSUS COOLDOWN RATES

FIGURE I

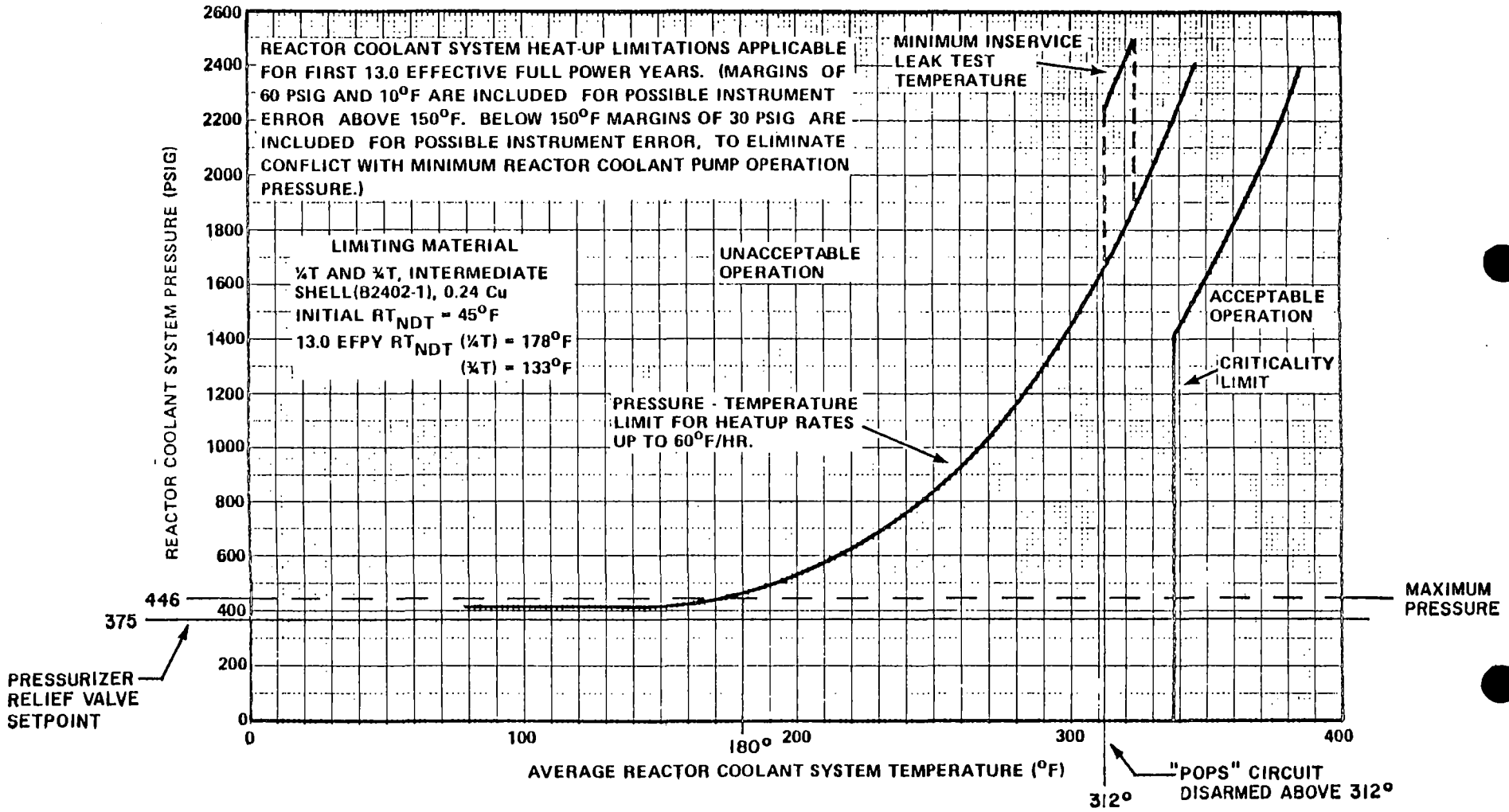

REACTOR COOLANT SYSTEM PRESSURE – TEMPERATURE LIMITS VERSUS 60°F/HOUR RATE – HEATUP RATE

FIGURE 2

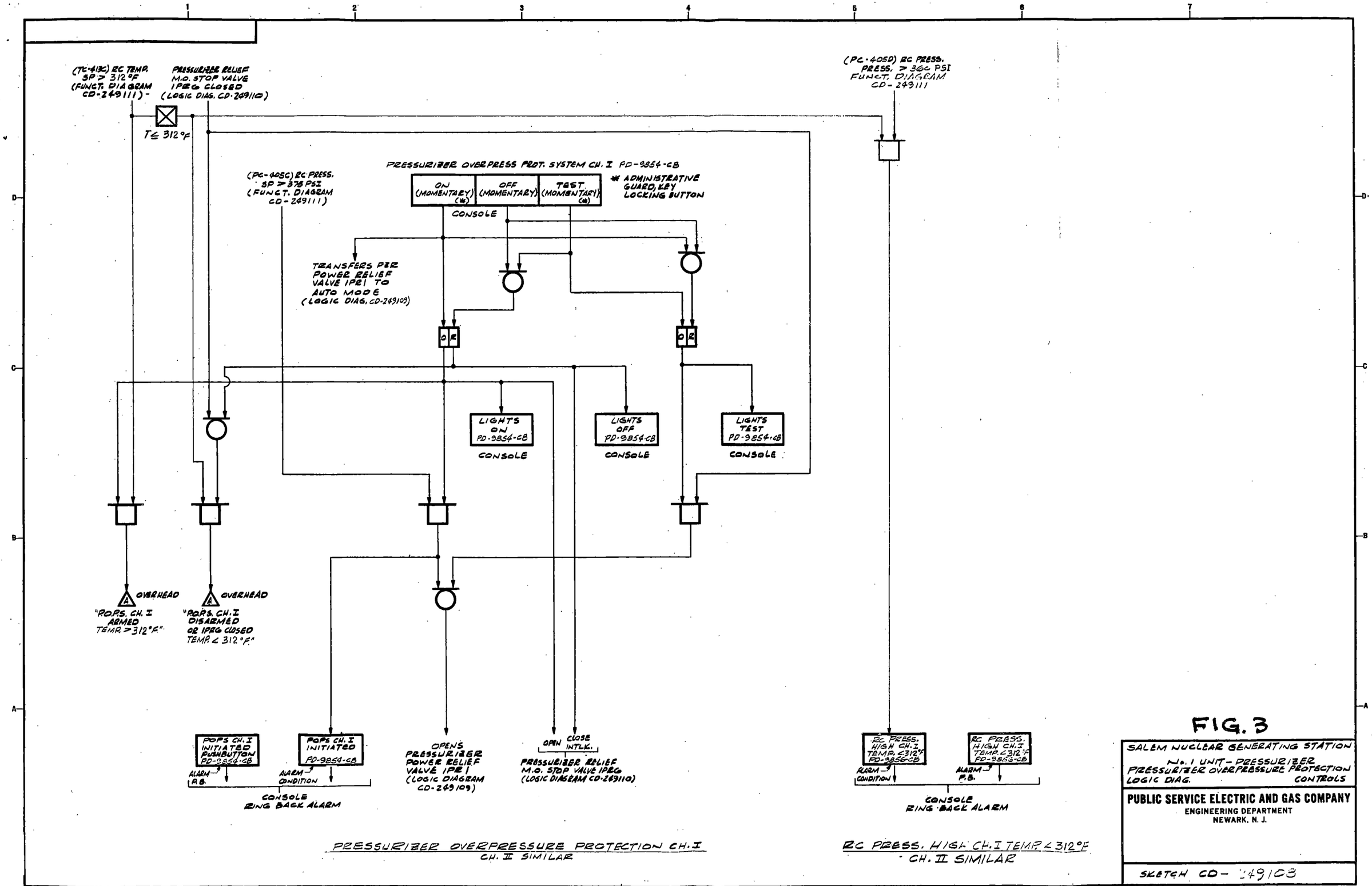

FIG. 3

SALEM NUCLEAR GENERATING STATION
No. 1 UNIT – PRESSURIZER OVERPRESSURE PROTECTION CONTROLS
LOGIC DIAG.

PUBLIC SERVICE ELECTRIC AND GAS COMPANY
ENGINEERING DEPARTMENT
NEWARK, N. J.

SKETCH CD- 249103

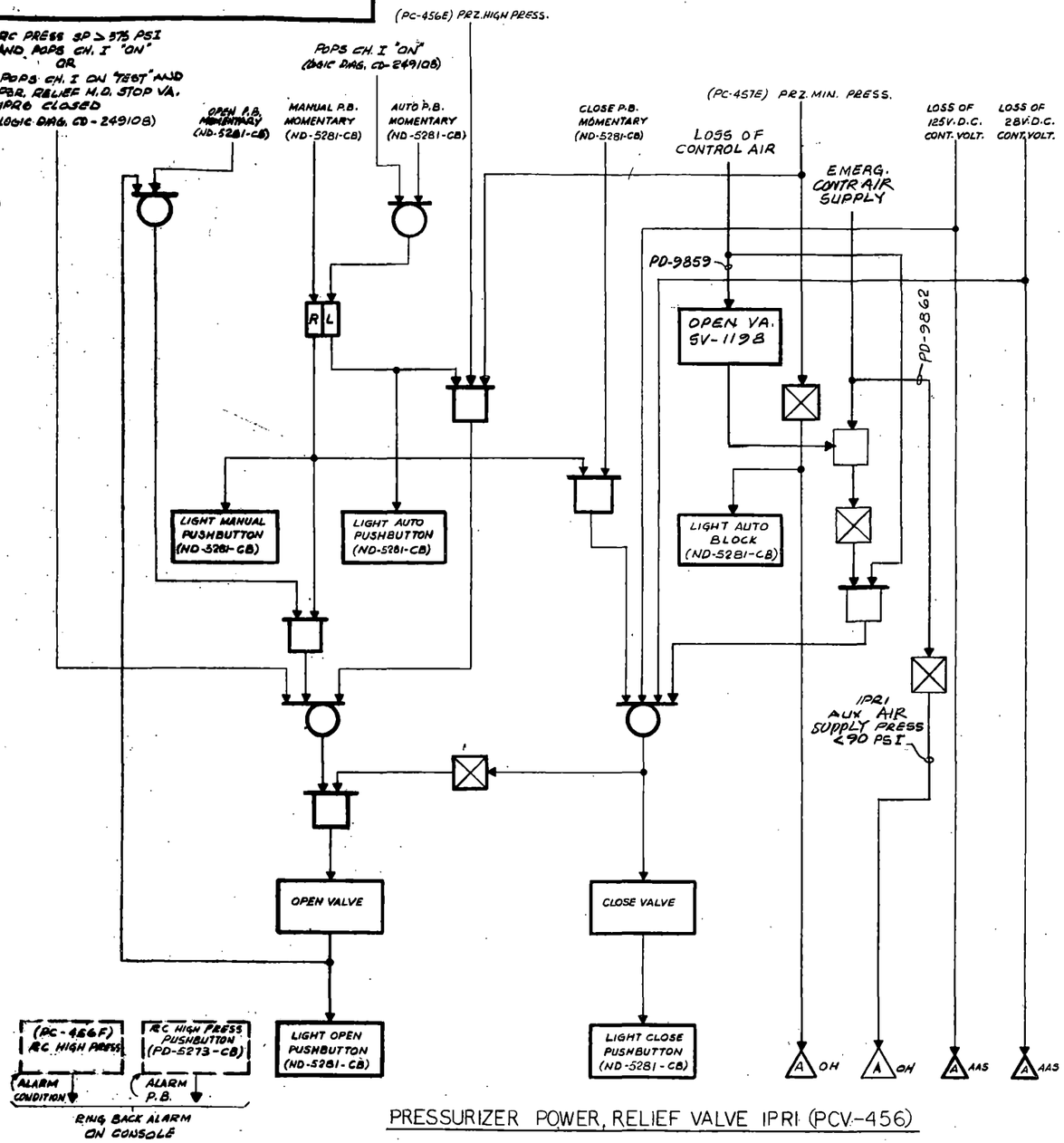

PRESSURIZER POWER, RELIEF VALVE IPR1 (PCV-456)

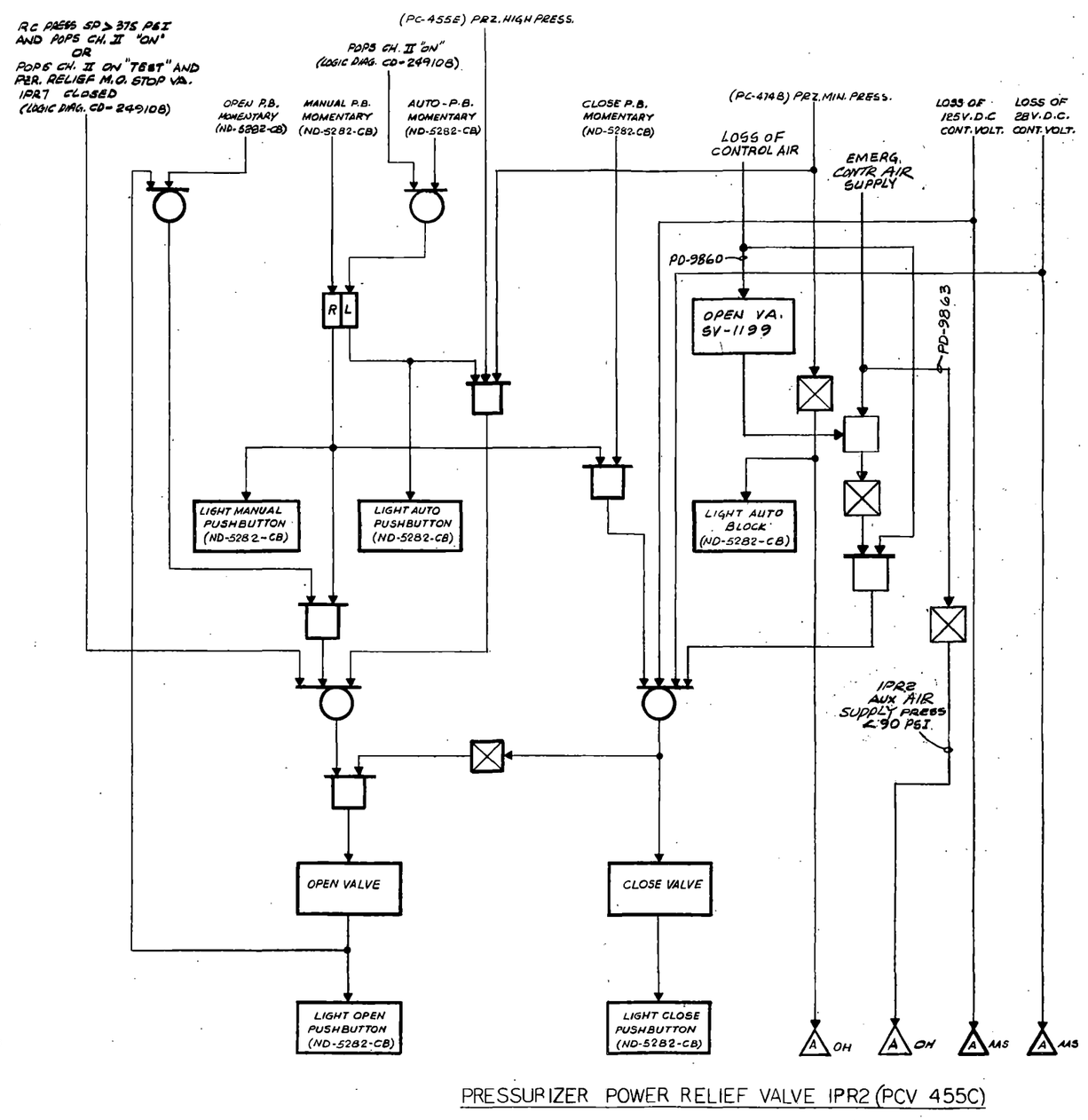

PRESSURIZER POWER RELIEF VALVE IPR2 (PCV 455C)

FIG. 4

SALEM NUCLEAR GENERATING STATION
NO.1 UNIT - PRESSURIZER
IPR1 , IPR2 PRESSURIZER
POWER RELIEF VALVES
LOGIC DIAGRAM CONTROLS

PUBLIC SERVICE ELECTRIC AND GAS COMPANY
ELECTRIC ENGINEERING DEPARTMENT
NEWARK, N. J.

SKETCH CD-249109-REV. 1

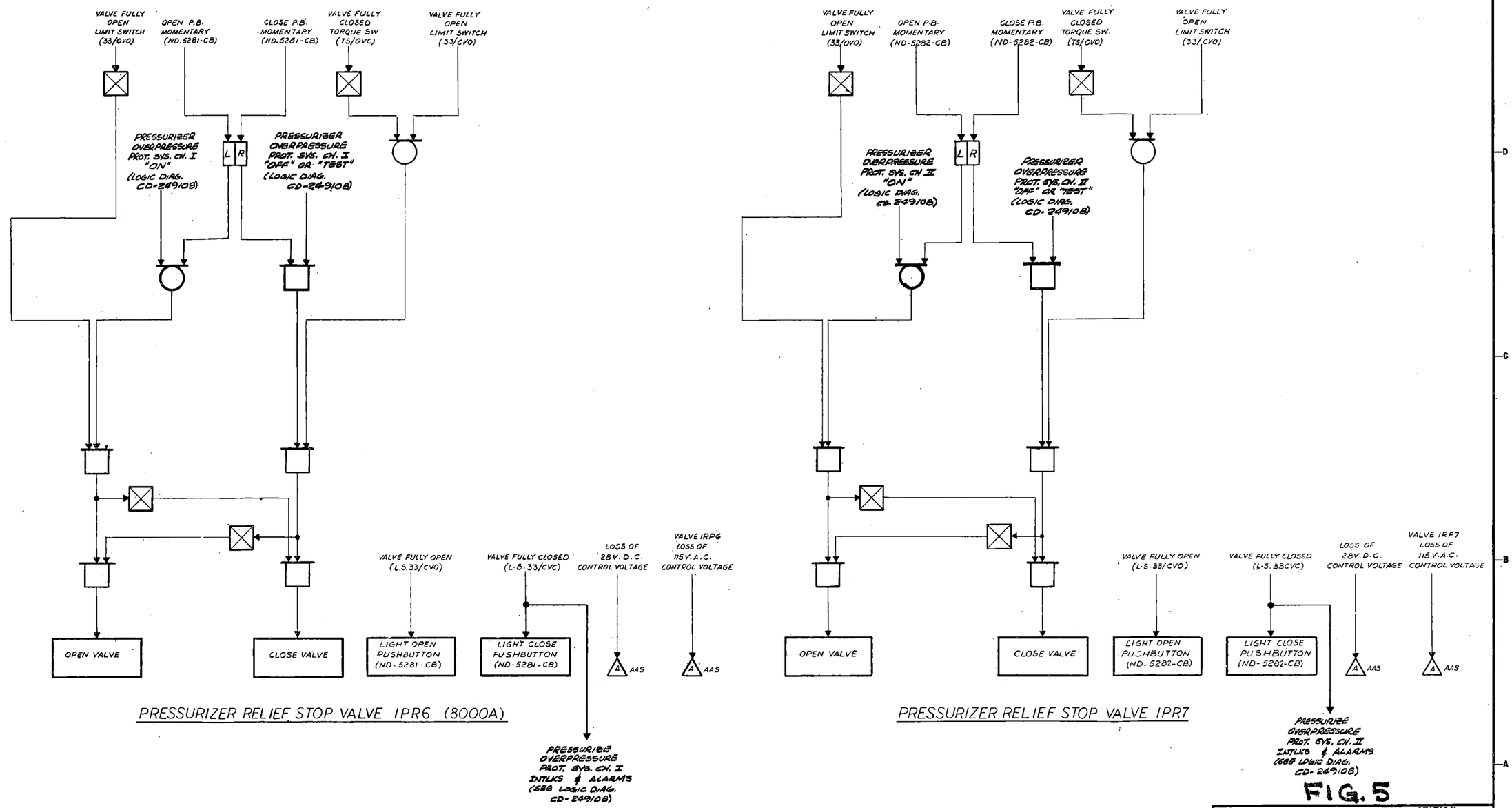

FIG. 5

SALEM NUCLEAR GENERATING STATION
NO. 1 UNIT - PRESSURIZER
IPR6, IPR7
PRESSURIZER RELIEF STOP VALVES
LOGIC DIAGRAM CONTROLS

PUBLIC SERVICE ELECTRIC AND GAS COMPANY
ELECTRIC ENGINEERING DEPARTMENT
NEWARK, N. J.

SKETCH CD-249110

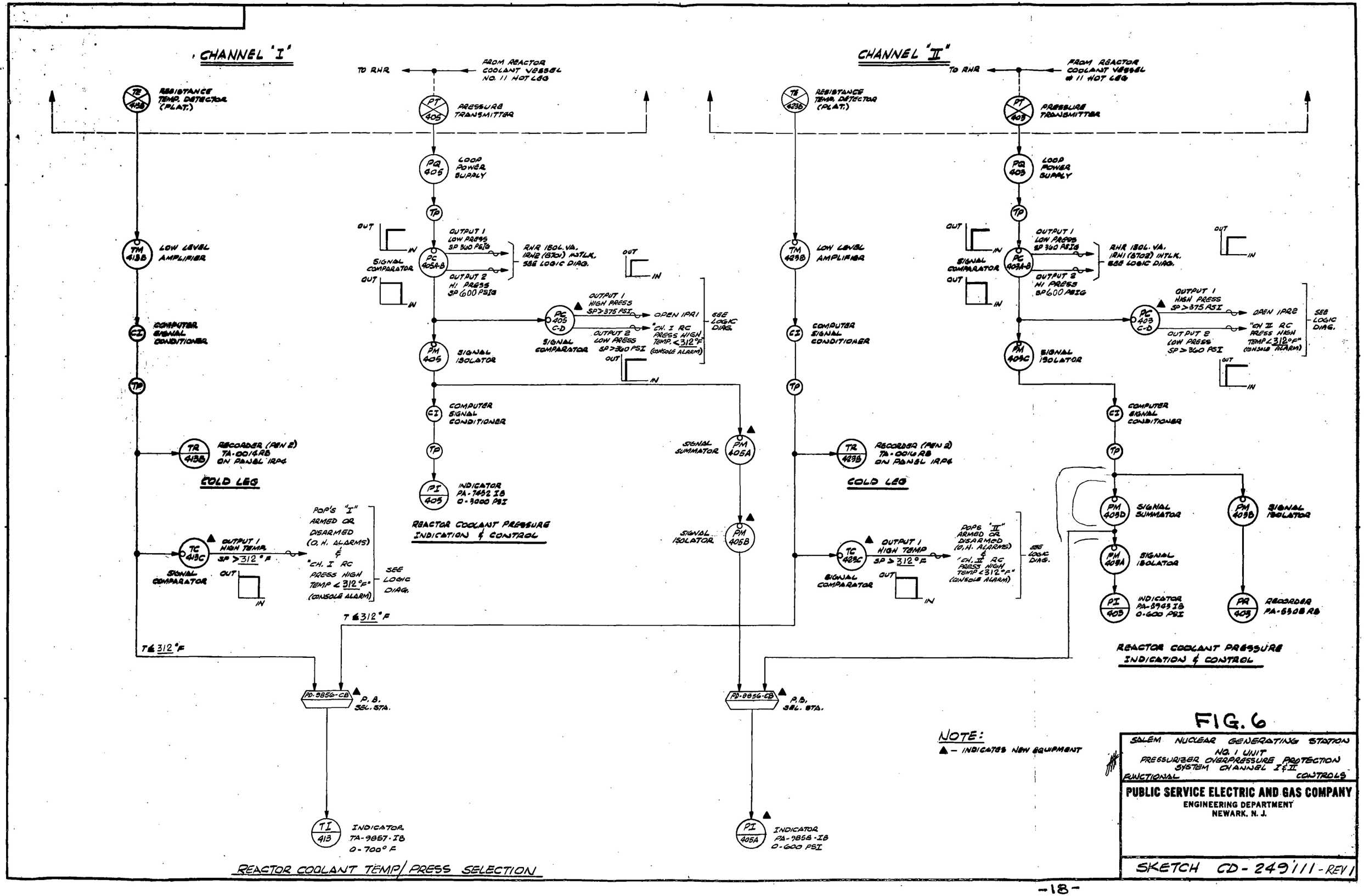
CHANNEL 'I'
TO RHR
FROM REACTOR COOLANT VESSEL NO. 11 HOT LEG
TE 413B RESISTANCE TEMP. DETECTOR (PLAT.)
PT 405 PRESSURE TRANSMITTER
PQ 405 LOOP POWER SUPPLY
TP
TM 413B LOW LEVEL AMPLIFIER
OUT IN
SIGNAL COMPARATOR
PC 405A-B
OUTPUT 1 LOW PRESS SP 360 PSIG
RHR ISOL. VA. IRH2 (8701) INTLK. SEE LOGIC DIAG.
OUTPUT 2 HI PRESS SP 600 PSIG
OUTPUT 1 HIGH PRESS SP > 375 PSI
OPEN IPR1
PC 405 C-D
SIGNAL COMPARATOR
OUTPUT 2 LOW PRESS SP > 360 PSI
"CH. I RC PRESS HIGH TEMP. < 312°F" (CONSOLE ALARM)
SEE LOGIC DIAG.
CI COMPUTER SIGNAL CONDITIONER
PM 405 SIGNAL ISOLATOR
TR 413B RECORDER (PEN 2) TA-0014RB ON PANEL IRP4
COLD LEG
PI 405 INDICATOR PA-7432 IB 0-3000 PSI
REACTOR COOLANT PRESSURE INDICATION & CONTROL
SIGNAL SUMMATOR
PM 405A
SIGNAL ISOLATOR
PM 405B
TC 413C OUTPUT 1 HIGH TEMP. SP > 312°F
SIGNAL COMPARATOR
POP'S "I" ARMED OR DISARMED (O.H. ALARMS) & "CH. I RC PRESS HIGH TEMP < 312°F" (CONSOLE ALARM)
SEE LOGIC DIAG.
T ≤ 312°F
PD-9856-CB P.B. SEL. STA.
TI 413 INDICATOR TA-9857-IB 0-700° F
REACTOR COOLANT TEMP/PRESS SELECTION
CHANNEL "II"
TO RHR
FROM REACTOR COOLANT VESSEL # 11 HOT LEG
TE 423B RESISTANCE TEMP. DETECTOR (PLAT.)
PT 403 PRESSURE TRANSMITTER
PQ 403 LOOP POWER SUPPLY
TP
TM 423B LOW LEVEL AMPLIFIER
OUT IN
SIGNAL COMPARATOR
PC 403A-B
OUTPUT 1 LOW PRESS SP 360 PSIG
RHR ISOL. VA. IRH1 (8702) INTLK. SEE LOGIC DIAG.
OUTPUT 2 HI PRESS SP 600 PSIG
OUTPUT 1 HIGH PRESS SP > 375 PSI
OPEN IPR2
PC 403 C-D
OUTPUT 2 LOW PRESS SP > 360 PSI
"CH II RC PRESS HIGH TEMP < 312°F" (CONSOLE ALARM)
SEE LOGIC DIAG.
CI COMPUTER SIGNAL CONDITIONER
PM 403C SIGNAL ISOLATOR
TR 423B RECORDER (PEN 2) TA-0016RB ON PANEL IRP4
COLD LEG
PM 403D SIGNAL SUMMATOR
PM 403B SIGNAL ISOLATOR
PM 403A SIGNAL ISOLATOR
PI 403 INDICATOR PA-8943 IB 0-600 PSI
PR 403 RECORDER PA-6508 RB
REACTOR COOLANT PRESSURE INDICATION & CONTROL
TC 423C OUTPUT 1 HIGH TEMP SP > 312°F
SIGNAL COMPARATOR
POPS "II" ARMED OR DISARMED (O.H. ALARMS) & "CH. II RC PRESS HIGH TEMP < 312°F" (CONSOLE ALARM)
SEE LOGIC DIAG.
PD-9856-CB P.B. SEL. STA.
PI 405A INDICATOR PA-9858-IB 0-600 PSI
NOTE:
▲ – INDICATES NEW EQUIPMENT
FIG. 6
SALEM NUCLEAR GENERATING STATION
NO. 1 UNIT
PRESSURIZER OVERPRESSURE PROTECTION SYSTEM CHANNEL I & II
FUNCTIONAL CONTROLS
PUBLIC SERVICE ELECTRIC AND GAS COMPANY
ENGINEERING DEPARTMENT
NEWARK, N. J.
SKETCH CD-249111-REV1

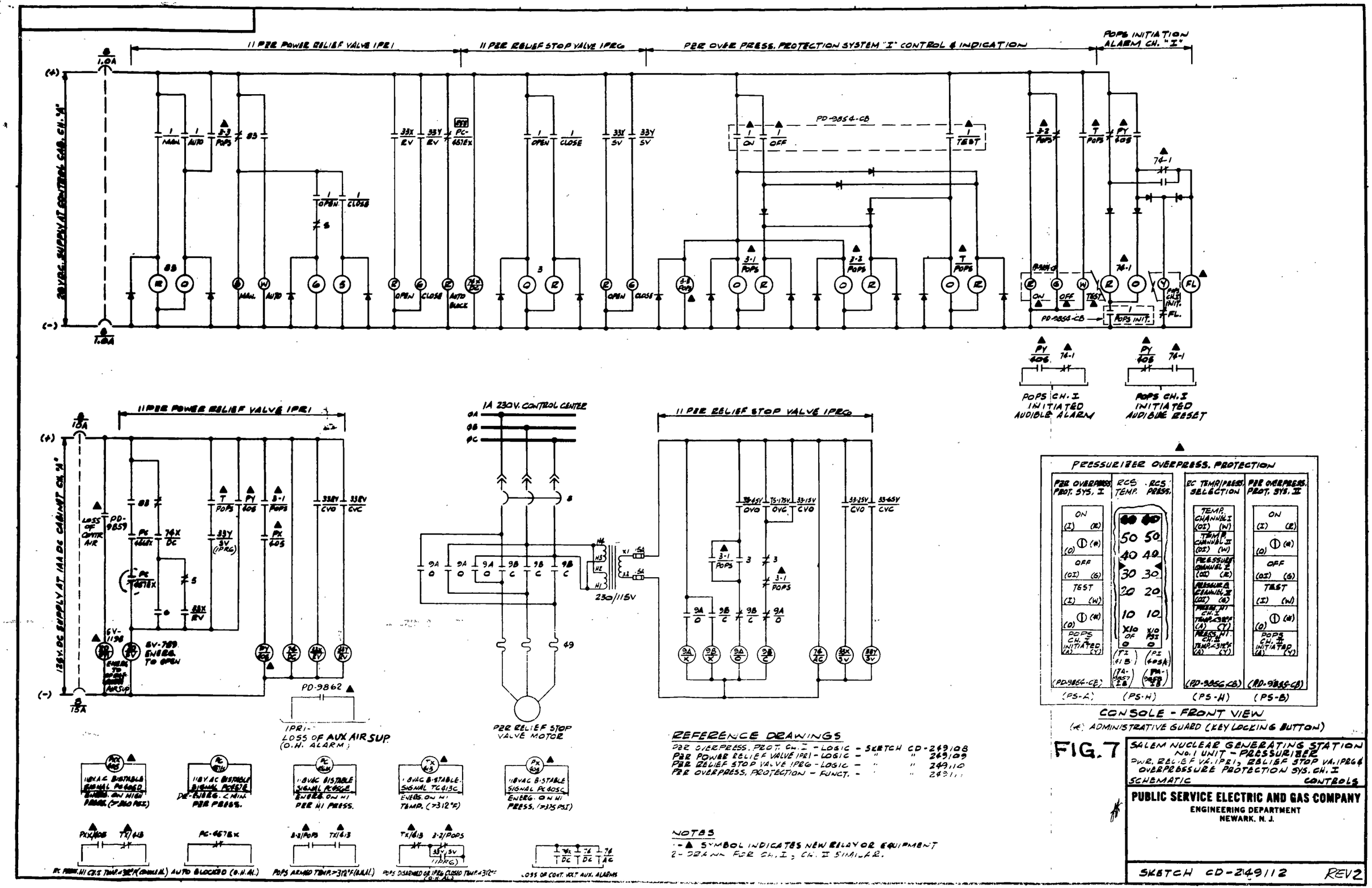
11 PZR POWER RELIEF VALVE (PR1)
11 PZR RELIEF STOP VALVE (PRG)
PZR OVER PRESS. PROTECTION SYSTEM "I" CONTROL & INDICATION
POPS INITIATION ALARM CH. "I"
20 VDC SUPPLY AT CONTROL CAB. CH. "A"
PD-9854-CB
POPS CH. I INITIATED AUDIBLE ALARM
POPS CH. I INITIATED AUDIBLE RESET
125V. DC SUPPLY AT 1A DC CABINET CH. "A"
LOSS OF CONTR. AIR
PD-9859
PD-9862
LOSS OF AUX AIR SUP (O.H. ALARM)
1A 230V. CONTROL CENTER
230/115V
PZR RELIEF STOP VALVE MOTOR
PRESSURIZER OVERPRESS. PROTECTION
PZR OVERPRESS PROT. SYS. I
RCS TEMP.
RCS PRESS.
RC TEMP/PRESS. SELECTION
PZR OVERPRESS. PROT. SYS. II
(PD-9856-CB)
(PS-A)
(PS-H)
(PS-H)
(PS-B)
CONSOLE - FRONT VIEW
(*) ADMINISTRATIVE GUARD (KEY LOCKING BUTTON)
REFERENCE DRAWINGS
PZR OVERPRESS. PROT. CH. I - LOGIC - SKETCH CD-249108
PZR POWER RELIEF VALVE (PR1) - LOGIC - " " 249109
PZR RELIEF STOP VALVE (PRG) - LOGIC - " " 249110
PZR OVERPRESS. PROTECTION - FUNCT. - " " 249111
NOTES
1 - ▲ SYMBOL INDICATES NEW RELAY OR EQUIPMENT
2 - DRAWN FOR CH. I; CH. II SIMILAR.
FIG. 7
SALEM NUCLEAR GENERATING STATION
NO. 1 UNIT - PRESSURIZER
PWR. RELIEF VA. (PR1); RELIEF STOP VA. (PRG) & OVERPRESSURE PROTECTION SYS. CH. I
SCHEMATIC CONTROLS
PUBLIC SERVICE ELECTRIC AND GAS COMPANY
ENGINEERING DEPARTMENT
NEWARK, N. J.
SKETCH CD-249112 REV2

APPENDIX A

WESTINGHOUSE REPORT - PRESSURE MITIGATING SYSTEMS TRANSIENT ANALYSIS REPORT