Attachment 1

Description and Safety Analysis
Spent Fuel Storage Rack Replacement
No. 1 Unit
Salem Nuclear Generating Station
Docket No. 50-272

TABLE OF CONTENTS

TABLE OF CONTENTS

(Continued)

LIST OF TABLES

LIST OF FIGURES

1.0 INTRODUCTION

1.1 History and Need for Replacement

The Salem No. 1 Unit spent fuel storage pool was designed on the assumption that a yearly fuel cycle would be in existence that would require the storage of a single batch of spent fuel for less than one year in the spent fuel pool. Therefore, a full storage capacity of 1-1/3 cores was considered adequate. This would allow the complete unloading of the reactor for maintenance or inspection, even if one batch (1/3 core) were in the pool.

Currently, spent fuel is not being reprocessed on a commercial basis in the United States. In addition, spent fuel storage at an off-site facility is not available at the present time nor in the foreseeable future. It is therefore desirable to modify the existing spent fuel storage pool to allow storage of additional spent fuel on the Salem Nuclear Generating Station site.

PSE&G has evaluated several alternatives to increasing the storage capacity of the spent fuel pool. These alternatives include:

a. Shipment of fuel to another reactor site.

b. Shipment of fuel to a reprocessing facility.

c. Storage in existing racks.

All of these alternatives were determined to be unsatisfactory because of the following:

a. Since spent fuel reprocessing is currently unavailable in the nuclear industry, it is not logical to attempt to store Salem fuel at another reactor site.

b. Currently, both the Nuclear Fuel Services and the General Electric Company's reprocessing plants are in a decommissioned state. Their fuel storage pools are available in a very limited capacity to only a few of their original customers. PSE&G does not have access to this storage. The Allied General Nuclear Services Plant is not licensed to operate, and cannot be depended upon for receipt of spent fuel until all of the issues relating to GESMO, spent fuel shipment and waste disposal have been settled. Additionally, reprocessing plants do not have large enough storage pools to accommodate long term storage of nuclear fuel. Therefore, shipment of spent fuel to a reprocessing plant is not an available alternative for several more years.

c. Storage in the existing racks is possible, but only for a short period of time. The

first batch of spent fuel is expected to be discharged in January, 1979, and an additional batch of spent fuel is expected to be discharged annually thereafter. Therefore, after discharge of the second spent fuel batch in January, 1980, the No. 1 Unit reactor would be operating without a full core discharge capability. The fuel could not be discharged from the core in the event operating conditions warranted a shut-down for inspection of the vessel or removal of the core internals. In addition, we would be unable to discharge the normal batch of spent fuel by January, 1983 because the existing racks would already be filled with spent fuel. In either of the above two situations, the additional cost to our customers for purchase of replacement power is estimated to be approximately $500,000 for each day the reactor is not operating. Therefore, due to this high differential cost of power, this alternative is not acceptable.

Based on the evaluation of these alternatives, PSE&G has concluded that increased on-site storage must be provided. In addition, this modification to the spent fuel racks must be completed before the first batch of spent fuel is discharged from the reactor in January,

1979. This will permit drainage of the spent fuel pool such that the modifications and basic installation of the racks can be made under clean conditions without spent fuel present.

1.2 General Description

PSE&G has entered into a contract with Exxon Nuclear Company, Incorporated, of Richland, Washington for the design, analysis, and fabrication of replacement spent fuel storage racks which will permit the storage of 1170 fuel assemblies in the spent fuel pool. These replacement spent fuel storage racks will provide storage capacity for approximately six full cores through the year 1996. Therefore, 18 annual discharges may be accommodated, or 15 annual discharges may be accommodated while still maintaining the capability for a full core discharge through 1993. The total construction cost is approximately $3,000,000 for the spent fuel rack modification.

The replacement spent fuel storage racks are to be fabricated primarily from Type 304 stainless steel. The individual fuel assemblies will be stored in square fuel storage cells fabricated from stainless steel clad Boral* material. The total weight is approximately 360,000 lbs.

*Trademark of Brooks and Perkins Incorporated.

Details of the high density (poison) spent fuel module design are shown in Figure 1.2-1. The design utilizes a stiffened module base and an upper box structure which contains the spent fuel storage cells. The module base is a welded assembly fabricated from plate, angle and channel members. Fuel assemblies are supported directly on this base structure, each assembly being centered over a 6 inch diameter cooling hole. Seven (7) support legs, incorporating remotely adjustable screw feed are welded to the module base. The upper box structure consists of a top grid assembly, mid height peripheral members and plate diaphrams and is welded to the module base. Plate diaphragms are stiffened, where necessary, to prevent shear/compression buckling. 1

The design of the spent fuel storage cells is illustrated in Figure 1.2-2. Each cell is a square cross-section formed from an inner shroud of stainless steel, a center sheet of aluminum clad Boral, and an outer shroud of stainless steel. This cell acts as a storage space and, in addition, provides sufficient neutron absorption with the boron carbide contained in the Boral sheet to allow spacing of spent fuel in a 10-1/2 inch by 10-1/2 inch array. The fuel weight is carried directly on the module base. A flared guide and transition section is provided at the top of each storage cell. This transition is designed to assure ease of entry and to preclude fuel assembly hang-up and damage. 1

Each of the Boral poison spent fuel cells (see Figure 1.2-2) is welded to the module base and the top grid assembly. In addition the cells are welded to each other at the mid height cell spacer bars with the outer cells being welded to the mid height peripheral members.

All rack modules are intertied at the top grid elevation. Details of the racks intertie design are shown in Figure 1.2-3. Three of these interties are provided at all rack-to-rack interfaces. The interties are designed to permit relative horizontal movement between racks to accommodate thermal expansion. Rack module overturning under seismic conditions is prevented by transmission of vertical shear forces from rack to rack. 1

Horizontal seismic loads are transmitted to the pool structure by friction of the rack feet on the pool floor in combination with loads transmitted to the pool walls by wall restraints shown in detail in Figure 1.2-4. These wall restraints are provided on all four sides of the rack array at the module base elevation. Loads are transmitted from rack to rack within the array at the base by bumper plates, show in Figure 1.2-1. The rack modules will be installed initially as a tight array with all racks touching in the center of the pool. The wall restrains will be installed and adjusted to provide sufficient clearance (approximately 3/8 inch) to

just permit free thermal expansion of the rack modules up to pool boiling temperature. Initial pool heat up will cause all rack modules to move outward from the center of the pool after which each module will be free to expand and contract about its own center. Detailed non-linear analyses described herein have been performed to determine the magnitude of the impact forces at the wall restraints and bumper plates under seismic loading conditions. 1

2.0 ENVIRONMENTAL ASPECTS

On September 16, 1975, the Nuclear Regulatory Commission announced its intent to prepare a generic environmental impact statement on handling and storage of the spent fuel from light water power reactors. PSE&G is requesting a license amendment to allow modification of the Salem Nuclear Generating Station No. 1 Unit spent fuel storage pool in advance of this environmental impact statement. The modification would give PSE&G greater operating flexibility which would be desirable even if adequate off-site storage facilities should later become available. Also, it is not likely that this modification would constitute a commitment of resources that would affect the alternatives available to other nuclear power plants or future actions taken by the industry to alleviate spent fuel storage problems.

The proposed modifications will utilize racks made of stainless steel, boron carbide and aluminum. These materials are readily available in abundant supply. The material requirements are insignificant and do not represent an irreversible commitment of natural resources.

PSE&G has assessed the environmental impact of this modification. There are no potential effects on the environs outside of the Fuel Handling Building that would result from the proposed modifications and construction work. Within the Fuel Handling Building, the impacts are expected to be limited to those normally associated with metal working activities. In addition, there are no adverse effects that will occur either on-site or off-site that can be associated with an increase in the number of fuel assemblies stored in the pool. Continuous water purification is normally used to remove impurities from the spent fuel pool water. This same filtration and demineralization process will be used after the spent fuel storage rack modifications are made to maintain the quality of the water at the same high level as originally planned. Therefore, there will be no increase in anticipated radiation levels inside the Fuel Handling Building.

The total volume of water in the spent fuel pool and new fuel storage pit at normal pool level is approximately 310,000 gallons. The spent fuel pool purification loop utilizes a filter and 30 cubic foot non-regenerative mixed bed demineralizer with a flow rate of 100 gpm. One volume of the spent fuel pool can thus be processed in approximately 52 hours.

There is expected to be no increase in filter replacement frequency or in the total radioactivity on the filter as a result of this modification. The filter is presently designed to be replaced once every year with capacity to remove corrosion products (crud burst) released by 1/3 of a core. Since the spent fuel rack modification increases only the storage capacity and not the frequency or the amount of fuel to be replaced for each fuel cycle, the amount of corrosion products released into the pool during any year would be the same regardless of the storage capacity of the pool. Thus, the present arrangement of replacing the filter upon high differential pressure at a frequency of approximately once per year is expected to remain unchanged as a result of this spent fuel storage rack modification.

The radioactivity of the spent fuel pool purification system demineralizer resin increases only by a small factor due to the increase in storage capacity. The demineralizer resin, like the filter, is expected to be changed based on differential pressure increase rather than on a loss of capacity to remove radioactive contaminants. As a result, the resin replacement frequency will not be significantly altered by the increase in spent fuel storage capacity.

In view of the above, it is anticipated that the radioactive solid waste generated will not increase as a result of this modification.

The assumed maximum concentrations of radionuclides released to the spent fuel pool water will be the same as those used in the initial design of the spent fuel pool and are highly conservative since they are based on 1% failed fuel and a crud burst model. They are also appropriate for the increased spent fuel storage capacity since the primary contribution to the activity is from the crud burst assumption which is not affected by the increased storage capacity.

No significant contribution to direct dose is made by the fuel covered to a depth of 23 feet with water. Fuel being transferred is the controlling contributor to the basic dose rates, not the stored fuel.

Thus, there should be no significant increase in annual man-rem exposure over that which would be experienced with the existing spent fuel storage facility.

Radioactive gases may be released from the spent fuel pool directly into the atmosphere of the Fuel Handling Building. This air is exhausted through particulate

and charcoal filters. The major radioactive gas that may be released during spent fuel storage is Kr-85 with a half-life of 10.76 years.

The design of the Salem facility does not permit measurement of radioactive gases released from individual ventilation systems, but data is available for releases from the overall plant. Data for part of 1976, and the first half of 1977, since No. 1 Unit has been operating, are presented in detail in the Semi-Annual Radioactive Effluent Release Report. For easy reference, the data for Kr-85, I-131 and Tritium are provided in Table 2.0-1.

As reported in our submittal on CFR 50, Appendix I, the initial estimate of Kr-85 to be released from the Auxiliary Building is $<$ 1 curie/year per Unit. Increasing the spent fuel storage capacity by a factor of 4.5 should not significantly increase the Kr-85 release rate.

The discharge of fuel from the reactor is expected to occur on a 1/3 core per year rate and the release of Kr-85 is most likely to occur during the initial handling and the first year of storage. Nevertheless, a conservative approach is to assume that the Kr-85 yearly release will increase by a factor of 4.5. Therefore, a

maximum Kr-85 release from the plant is 4.5 curies/year, an increase of $\leq$ 3.5 curies/year. The total plant release of Kr-85 initially projected was 280 curies/year; thus, the maximum percentage increase due to spent fuel storage pool expansion would be less than 1.25 percent.

3.0 SAFETY ANALYSIS

3.1 Criticality Considerations

An analysis was performed of the potential maximum reactivity of the fuel stored in the proposed fuel assembly storage facility. This analysis considered the minimum possible spacing under normal and earthquake conditions, the maximum fuel enrichment level, the most reactive conditions of fuel density, and the most reactive water temperature. No credit was taken for any boron present in the storage pool water under normal conditions.

3.1.1 Criticality Criteria

The spent fuel storage racks shall be designed such that k_{eff} is limited to a value of less than 0.95 under normal circumstances when the pool is flooded with demineralized water. The calculated value shall be less than 0.95 by a margin sufficient to account for calculational uncertainties. In the analysis credit may be taken for neutron absorption of the stainless steel clad and for the boron carbide contained within the Boral plates used in the poison cells within the rack module. Credit shall not be taken for any burnable poison that may be contained in the fuel. No credit shall be taken for boron dissolved in the spent fuel pool water under normal conditions. Credit may be taken, however, for a minimum of 1700 ppm boron in the spent fuel pool water under accident conditions (dropped fuel assembly or placement of the fuel assembly outside the fuel storage array).

The k_{eff} calculations shall be based on a maximum fuel enrichment level in new unburned fuel of 3.5 w/o U-235. An evaluation of all credible abnormal fuel configurations shall be made. Criticality calculations shall consider any reductions in fuel bundle center-to-center spacing resulting from dimensional tolerances and clearance between the fuel bundle and its storage cell. The calculation shall also consider

variances in boron loadings within the Boral plates and deformations under structural loads and from abnormal events.

3.1.2 Calculational Methods

The methods employed by Exxon Nuclear Company in the criticality safety analysis are the same as those reviewed and approved by the NRC in prior submittals. The following is a summary of that methodology.

The KENO-III Monte Carlo Model[1] was utilized to calculate the reactivity of the Salem spent fuel storage array. Multigroup cross-section data utilized in these calculations were averaged using the CCELL[2], BRT-1[3], and GAMTEC-II[4] Codes. Specifically, the cross-section data for various regions within the storage array were obtained as follows:

<u>CCELL</u> - Utilized to obtain cell averaged multigroup cross-section data for fuel rod-water lattices. Such calculations include both the bundle averaged cell parameters and the actual lattice cell parameters. In addition, CCELL was used to (1) examine the effects of UO_2 pellet density, moderator temperature, and fuel temperature on the infinite media multiplication factor of the fuel assembly, and (2) calculate epithermal multigroup cross-section data for stainless

steel (e $\leq$ 0.683 ev) averaged in a neutron energy spectrum characteristic of the water regions within a fuel assembly.

BRT-1 - Thermal group ($\leq$ 0.683 ev) cross section data for the stainless steel clad Boral fuel storage cells were averaged using the Battelle Revised THERMOS code. Such data were averaged assuming two 0.199 inch thick slabs of stainless steel and aluminim clad boron carbide having a B-10 loading of 0.020 gm/cm^2, both of which were separated from rod-water lattices (characteristic of the fuel assembly) by appropriate slab thickness of water. 1

GAMTEC-II - Multigroup cross-section data for water were averaged over a neutron energy spectrum characteristic of an infinite media.

In addition to the codes identified above, the KENO-IV Monte Carlo code[5] was utilized to verify the accuracy of the above-mentioned calculational technique for poisoned rod-water lattices. Cross section data used in KENO-IV were generated over 123 energy groups using the NITAWL and XSDRNPM codes [6].

3.1.3 Storage Array Description

The Salem spent fuel storage pool will accommodate twelve specially designed modules, as shown in

Figure 1.2-1. Each module contains a specific number of fuel assembly locations (e.g., 100 locations for a 10 x 10 module). The design specifies a 14-13/16 inch nominal center-to-center fuel storage cell separation between adjacent modules. 1

From a neutronics standpoint, the arrangement of modules in the storage pool results in an essentially infinite array of fuel assemblies in both the axial and radial directions. Figure 3.1-1 represents a fuel assembly in a storage cell in the nominal position. Consequently, under normal conditions each unit within the effectively infinite storage array is concentric in its respective storage cell.

In addition to the nominally spaced array, the minimum spacing between fuel assemblies has also been considered. Specifically, the minimum center-to-center separation between adjacent storage cells will be "gauged" to assure a minimum center-to-center separation of not less than 0.125 inches (Δs) less than the nominal value. All tolerances are from a true position within the storage pool and are not relative to adjacent storage cells. As a consequence, the worst spacing in the pool array occurs as a cluster of four adjacent assemblies with other fuel storage cells being spaced the nominal center-to-center distance from that cluster. Hence, the worst

credible spacing arrangement within the array is as shown in Figure 3.1-2. This arrangement also assumes that fuel assemblies in the cluster are in contact with the inside of each respective fuel storage cell.

For the postulated accident condition of a fuel assembly lying horizontally across one or more of the storage modules, criticality safety is maintained through neutron isolation. A fuel assembly lying across the top of the modules would be isolated from other fissile material by approximately 19 inches of water. This separation between fuel assemblies effectively isolates from a neutronics standpoint the horizontal assembly from those in the module cells and, hence, there is no contribution to the overall reactivity of the array.

Placement of fuel assemblies within the perimeter of the array outside of the planned storage locations is precluded by rack design.

3.1.4 Results

Values of k_{inf} were computed for the Salem design base fuel assemblies assuming both the nominal fuel rod and bundle-averaged lattice cell parameters (see Table 3.1-1). These two cases were examined to provide insight as to the reactivity effects of the instrument and control rod guide tubes within the fuel assembly. These results

(see Table 3.1-2) indicate a slight increase in k_{inf} due to the increased moderator-to-fuel volume ratio inside the homogenized fuel assembly.

In order to evaluate the reactivity sensitivity of the fuel assembly to changes in enrichment, the value of k_{inf} was calculated for U-235 enrichments up to and including 3.9 w/o. These values (see Table 3.1-3) would indicate an increase of approximately 6 mk per 0.1 w/o increase in the specified range.

To evaluate the potential effects of pool temperature on the reactivity of individual fuel assemblies, values of k_{inf} were computed for temperatures ranging from 20°C to 100°C. Calculated values of k_{inf} (see Table 3.1-3) indicate that increasing the fuel assembly temperature results in a decrease in k_{inf} of approximately 1 mk per 20°C increase.

In addition to examining the potential effects of temperature, the effect of UO_2 density changes was also examined. For this criticality safety analysis, the UO_2 density was assumed to be 94% of theoretical. Over the range of interest, k_{inf} of the assembly decreased with increasing density (see Table 3.1-3). Table 3.1-3A shows the effect of increasing or decreasing the minimum boron content by 0.01 gms B-10/cm^2 between adjacent fuel assemblies. The 1

tabulated values were obtained from a transport calculation and show an increase of the 16 mk per 0.01 gm B-10/cm^2 decrease between adjacent fuel assemblies. 1

The KENO-III Monte Carlo code was used to compute storage pool reactivities. The bundle-averaged fuel assembly parameters given in Table 3.1-1 were used to describe the effective fuel assembly. Reactivity calculations were performed using an effectively infinite representation of the storage array.

In evaluating the overall reactivity of the storage array, conservative assumptions were made with regard to the conditions (from the standpoint of neutronics) that could exist in the pool. Conditions assumed in the "worst case" reactivity calculations include:

1) 3.5 w/o U-235 enriched fresh UO_2 fuel;
2) Bundle-averaged fuel assembly parameters;
3) Minimum fuel storage cell center-to-center spacing of 0.125 (Δs) inches less than the nominal values (This accounts for limits on installation tolerances and fuel storage cell deflection due to load stresses, possible earthquake disturbances, etc.). This represents the worst case geometry for an array as described in Figure 3.1-2.
4) Temperature variances (20-100°C) in the pool water;
5) No credit taken for any soluble boron in the pool water.

For the nominal case reactivity calculations, only assumptions 1, 2 and 5 were utilized, and the pool water temperature was assumed to be 20°C.

Table 3.1-4 lists results of pool reactivity calculations for both the nominal and worst case conditions. All worst case conditions as given above are concurrently considered in a single calculation. In addition to these assumptions, the unlikely condition of assuming the fuel assembly to have a fuel-moderator temperature of 20°C and the water between fuel assemblies to be at 100°C was made. This assumption maximizes both the reactivity of the fuel assembly and the interaction between adjacent assemblies. For this non-credible boundary case, the reactivity was calculated to be not greater than 0.923 ± .004 (KENO-IV). 1

3.1.5 Systematic Uncertainties

Theory-experiment comparisons have been made for both water moderated unpoisoned critical arrays of fuel rods and water moderated critical arrays employing 4.95 w/o U-235 metal rods and 0.25 inch Boral sheets. Such critical experiments have been evaluated using the KENO Monte Carlo Code with cross-section data averaged as discussed previously.

The results of the unpoisoned calculations, which have been the benchmark basis for previous Exxon Nuclear Company storage rack designs, are shown in Table 3.1-5. Inspection of the results indicate that the calcula-

tional methods employed by Exxon Nuclear Company yield conservative results relative to the experimental data. In addition, the KENO calculated reactivities agree with the previously performed DTF-IV[7] transport theory calculations within the statistical uncertainties of the Monte Carlo calculations.

As a basis for additional calculational model verification, the results of unpublished ORNL critical experiments employing 4.95 w/o U-235 metal rods were obtained from E. B. Johnson and G. E. Whitesides [8] of ORNL. Five of these experiments were chosen for which reactivity calculations were performed.

Table 3.1-6 describes the physical makeup for each of the experimental criticals. In performing the actual experiments, an infinite water reflector (approximately 6 inches) was present in all directions except on the top of the lattice. The water height above the lattice was varied to control the reactivity.

The results of the KENO-III (18 group) reactivity calculations are given in Table 3.1-7. At a 95% confidence level, Cases 1, 2 and 3 are from a statistical standpoint represented by the experimentally determined critical value (k_{eff} = 1.000).

In addition to these calculations, the reactivities of lattices 2A, 3B, and 4C were calculated using the KENO-IV computer code with 123 energy group cross section data generated by the NITAWL and XSDRNPM codes. These results are also given in Table 3.1-7.

3.2 Fuel Handling Considerations

An analysis of the consequences of a fuel handling accident was performed in the Final Safety Analysis Report for the Salem Nuclear Generating Station. The Nuclear Regulatory Commission's Safety Evaluation Report for Salem concluded that the analysis was acceptable. The modification proposed for the spent fuel racks would not affect the consequences or probability of that accident, nor introduce a different or more severe accident.

3.3 Cask Drop Consequences

The Nuclear Regulatory Commission concluded in its Safety Evaluation Report for Salem that the spent fuel shipping cask storage area had been designed to minimize the consequences of an accidental drop of a spent fuel shipping cask and was acceptable. The proposed spent fuel rack modification does not involve the spent fuel shipping cask area. Therefore, the proposed modification does not affect the original cask drop evaluation.

3.4 Material Considerations

All permanent structural material exposed to the spent fuel pool environment that is used in the fabrication of the spent fuel storage racks is 300 series stainless steel, mostly 304. This material was chosen for compatibility with the spent fuel pool water, which contains boric acid at a nominal concentration of 2000 ppm boron.

At the design operating temperature of 120°F, there is no deterioration or corrosion of stainless steel in this environment. There is also no corrosion problem at temperatures up to and including pool boiling. All other structural components in the spent fuel pool system, such as the pool liner, cooling system pipe connections, etc., are made of stainless steel.

The Salem high density spent fuel storage cells utilize Boral material sealed between an inner and outer stainless steel shroud. This cell will be supplied to Exxon Nuclear Company by Brooks and Perkins, Incorporated. The stainless steel shroud (or cladding) is Type 304, meeting the requirements of ASME SA240. The Boral consists of an 1100 series aluminum and boron carbide matrix core sandwiched between two layers of 1100 series aluminum cladding. Boron carbide particles act as a neutron

absorber. The boron carbide is ASTM-C750-74 Type II or equivalent. Non-destructive testing of the cells will be conducted to insure 100% leak tightness with a 95% confidence level. In addition to these programs, Exxon Nuclear Company will conduct an independent neutron transmission testing program on the completed poison cells.

In summary, the pool liner, rack lattice structure, and cell exteriors are all stainless steel, which has demonstrated good corrosion resistance in PWR spent fuel pool environments. The design, material selection, and the NDE program provide a high degree of assurance that integrity of the fixed poison material will be maintained. The material used in the new spent fuel storage racks is similar to present components and does not effect or alter previous evaluations.

3.4.1 Poison Verification Program

Close control and verification of the material properties utilized in the manufacture of the Boral is assured through the manufacturer's Quality Assurance Program and is documented on appropriate material certification reports. Prior to inserting the Boral plates into the finished cell configuration, each plate is identified in order to allow traceability to the end product. Records are generated for each cell identifying the plates in-

stalled in that cell by serial number, thereby providing positive assurance that the required plates are in place.

Special handling measures are imposed on the packaging and shipping to minimize the possibility of degrading the quality of the cells during transit. A thorough receipt inspection at the rack fabrication facility is performed to assure no damage has occurred.

During rack fabrication, additional care is exercised to prevent damage to the stainless steel cladding of the poison cells. Traceability is continued on the cells by providing a cell location map of each fuel storage rack module.

Documentation is maintained on all testing and surveillance performed on the poison cells as well as material certification reports on all materials used in the construction of the cell.

3.4.2 In-Pool Surveillance Program

Surveillance specimens are provided to allow for surveillance over the lifetime of the fuel storage racks. The purpose of these specimens is to provide assurance that no unexpected corrosion is occurring which could compromise the integrity of the Boral. The surveillance specimens are in the form of removable stainless steel clad Boral sheets, which are prototypic

of the fuel storage cells. These specimens can be routinely removed and examined and then reinstalled in the spent fuel pool.

3.5 Thermal Considerations

3.5.1 Fuel Assembly Heat Removal

The Salem spent fuel racks utilize stainless steel encapsulated Boral shrouds supported in a stainless steel structural lattice. Adequate flow paths to the fuel assembly inlet are provided by sufficient space beneath the racks and between the racks and the pool walls. A six-inch hole at the bottom of the fuel storage cell serves as the coolant inlet. Flow paths between fuel storage cells within a rack module are provided to remove gamma heating of the inter-cell coolant.

Design Criteria

The high density spent fuel storage rack design provides storage capacity for slightly more than 6 cores (1,170 spent fuel assembly storage cells). The original fuel storage design provided for storage of 1-1/3 cores. Because of the high density storage (compared to the original design) the design was reviewed to determine if adequate natural convection cooling is available during normal operation to: (a) maintain fuel rod clad temperatures at acceptable levels; and (b)

preclude boiling within the fuel assemblies. Fuel rod clad temperatures were also evaluated under hypothetical loss of forced coolant circulation conditions where the pool surface is assumed to reach a saturation temperature of 212°F.

Methods of Analysis

The methods employed by Exxon Nuclear Company in this thermal-hydraulic analysis are similar to those reviewed and approved by the NRC in prior submittals. The following is a summary of that methodology.

In order to perform conservative calculations for defining fuel rod cladding temperature, the following information was developed.

1. Maximum fuel heat generation rates per assembly and maximum local fuel rod heat generation rates;
2. Fuel assembly inlet temperature;
3. Flow resistance of worst case paths within the fuel assembly, within the storage rack, and between the rack and the pool for worst case fuel assembly placement within the storage array; and
4. Heat flow resistance between the fuel clad and coolant.

This information was obtained in the following way.

Maximum heat generation rates per fuel assembly were based on NRC Branch Technical Position APCSB 9-2. Based on 1095 effective full power days within the reactor and a minimum 150 hour cooling period, maximum in-pool heat generation rates of 55.4 kW/fuel assembly were calculated.

Maximum local fuel rod heat generation rates were obtained by subsequently applying a conservative peaking factor of 1.6.

Under forced coolant circulation conditions, the fuel assembly inlet temperature was taken as the maximum expected pool discharge temperature, 150°F. Under the assumed loss of forced coolant circulation conditions, the inlet temperature was taken as local saturation temperature at the top of the fuel storage racks, 239°F, since this represents a maximum upper limit for the inlet temperature. Flow paths and flow resistances were identified on a worst case basis assuming worst case fuel assembly placement and conservative values for flow resistances. The flow network assumed for this analysis is illustrated in Figure 3.5-1 where all fuel storage cells are assumed to contain fuel at maximum heat generating rates.

Heat flow resistance was obtained from classical and experimental relations developed for laminar, turbulent, and boiling flow regimes.

With the above information, simultaneous solution of the continuity, momemtum, and energy equations using versions of the COBRA code and subsequent hand calculations provide local and maximum spent fuel clad temperatures, coolant temperature rise, mass flow rates, local pressure, and pressure drops within the fuel assembly. For the two phase flow situations which can occur during a loss of forced coolant circulation, two additional parameters, void fraction and quality were also computed.

The COBRA thermal hydraulics code is used extensively throughout the nuclear industry for thermal hydraulics analyses. Hand checks of the results of this code have been made on spent fuel storage rack thermal-hydraulic analyses.

Results

Thermal-hydraulics analysis of the natural convection cooling of a single fuel assembly indicates that there is adequate cooling under normal and even under hypothetical conditions where a loss of forced coolant circulation is assumed to occur. This result is based on the two (2) cases presented in Table 3.5-1. These

results are for the fuel storage cell located at the pool center as shown in Figure 3.5-1 and are therefore the worst case.

The first case is the normal situation where the heat generation rate is 55.4 kW per assembly and the fuel storage cell inlet temperature is taken as 150°F, the maximum expected pool operating temperatures under normal conditions. The fuel rod peak cladding temperature is ≤ 208.9°F; therefore, there can be no boiling within the fuel assembly and the flow is single phase.

The second case is similar to the first except for the assumed inlet temperature, 239°F. This is the saturation temperature corresponding to the hydrostatic pressure at the top of the fuel storage cell. This is the maximum temperature that water flowing towards the fuel assembly inlet can attain under the hypothetical conditions where forced coolant circulation is assumed lost -- and the surface of the pool is assumed to reach 212°F which is the saturation condition at that location. Under these assumed conditions, boiling does occur in the upper portion of the fuel assembly. Maximum cladding temperature under this case is calculated at 245.3°F.

In summary, thermal-hydraulics analysis indicates that even under hypothetical extreme conditions, peak clad

temperatures are well below conditions where any degradation of the clad would occur. The spent fuel storage racks are considered safe from a thermal-hydraulics standpoint based on this analysis.

3.5.2 Spent Fuel Cooling Capability

An evaluation has been performed to determine the capability of the Spent Fuel Cooling System to provide the cooling capacity required for both the annual discharge of 65 fuel assemblies and for a full core discharge of 193 fuel assemblies into the spent fuel pool. ANS Standard 5.1 was used for decay heat load calculations. It has been determined that the Spent Fuel Cooling System can provide the necessary cooling for the normal annual discharge as early as 100 hours after reactor shutdown. A full core discharge can be accommodated with an appropriate time delay after reactor shutdown, which is dependent on the number of regions stored in the spent fuel pool at the time.

3.6 Installation Considerations

The No. 1 Unit of Salem Nuclear Generating Station is currently operating in its first fuel cycle. There is no spent fuel currently being stored in the existing spent fuel storage racks. The new spent fuel storage

racks will be installed in a manner such that the capacity for unloading the entire reactor core will be maintained. It is our intent to have the new spent fuel storage racks completely installed prior to the first refueling outage.

3.7 Mechanical Considerations

3.7.1 Design Criteria

Structural design criteria for spent fuel storage racks have been developed to assure conformance with recognized codes and applicable regulatory guides, as follows:

1. The fuel storage rack design is based on the requirements of the ASME Boiler and Pressure Vessel Code, Section III, Sub-section NF, Class III Linear Supports.

2. Regulatory Guide 1.13 - The design conforms with the stated provisions for spent fuel storage equipment.

3. Regulatory Guide 1.29 - The spent fuel storage racks are designed as Category 1 Structures.

4. Regulatory Guide 1.92 - Seismic load combinations of vibrational modes and three orthogonal component motions (two horizontal and one vertical) will meet the provisions of the regulatory guide.

3.7.2 Design Loads and Load Combinations

The loads defined below are combined and compared with section strengths in accordance with the requirements of the Standard Review Plan, Section 3.8.4, Structural Design Criteria for Seismic Category I Structures Outside Containment and ASME Section III NF-3400:

D = Dead load of fuel module structure and stored fuel.

Live Loads (L)

L_a = Load from force of lowering a fuel assembly at maximum crane speed.

L_b = Crane uplift force

L_c = Load from accidental release of a fuel assembly while handling.

L_d = Module shipping loads

T_o = Thermal loads during maximum normal conditions.

E = Loads generated by Operating Basis Earthquake (OBE).

E^1 = Loads generated by Safe Shutdown Earthquake (SSE).

T_a = Thermal load resulting from maximum pool temperature during boiling at the pool surface.

Service Conditions and Load Combinations	Linear Member Limits
Normal Conditions	
$D + E$	$S^{(1)}$
$D + L_d$	S
Abnormal Conditions	
$D + L_a + T_o$	$1.5S$
$D + L_b + T_o$	$1.5S$
$D + L_c + T_o$	$1.5S^{(2)}$
$D + T_o + E$	$1.5S$
$D + T_o + E^1$	$1.6S$
$D + T_a + E$	$1.6S^{(3,4)}$
Faulted Condition	
$D + T_a + E^1$	$2.0S^{(4,5)}$

Notes

(1) S is the required section strength based on the elastic design methods and the allowable stresses defined in NF-3400, for linear type supports.

(2) Localized damage to fuel storage cells is permitted provided that the spacing of fuel bundles is not affected.

(3) For these combinations, in computing the required section strength, S, the plastic section modulus of steel shapes may be used, except where spacing of fuel bundles would be affected.

(4) Self-limiting stresses due to T_a may be neglected.

(5) The allowable stresses in linear members for the Faulted Condition are in accordance with F-1370 of ASME Section III, Appendix F.

(6) The stress limits in plate members for each service condition are in accordance with NF-3321.

For the static load combinations, consideration is given to the worst possible loading conditions of the fuel storage racks, varying from empty to fully loaded. The horizontal and vertical response for the Fuel Handling Building at the elevation of the bottom of the spent fuel pool is used as the basis for the seismic analysis. 1

3.7.3 Methods of Analysis

The methods employed by Exxon Nuclear Company in the structural design and analysis are the same as those reviewed and approved by the NRC in prior submittals. The following is a summary of that methodology.

Structural Analysis

The SAP-4[9] computer program is used for static and dynamic analysis of the fuel storage rack structure. The analytical model is sufficiently detailed to allow determination of static and dynamic loads on all rack members and includes rack-to-rack interties and wall braces. Appropriate boundary conditions for the rack interties and the support point nodes at the base of the structure are developed.

The mass of the water enclosed in the spent fuel storage rack is lumped together with the masses of the fuel assembly and the rack structure in the lumped-parameter SAP-4 model. Static analysis output consists of member loads and nodal deflections. Dynamic analysis output includes frequencies, mode shapes, participation factors and member loads.

Static and seismic loads obtained from the SAP-4 model are combined together and with other loads as required by the criteria outlined above to calculate stresses

in the structural members. The calculated stresses are then compared with the applicable allowable stresses to confirm structural adequacy.

Detailed structural analysis for static and dynamic loads has been completed. Figure 3.7-1 shows the SAP-4[9] computer analysis model. The analytical model is for a complete rack structure and comprises 249 nodes and 508 structural elements. The model comprises beam, truss and membrane elements to represent the various rack members. Bending tests were performed on an eight foot long section of Boral poison spent fuel cell to obtain stiffness and strength data for use in the structural analysis. The model includes the rack-to-rack interties which are included in the actual structure. Boundary conditions at the interties are shown in Figure 3.7-1.

Static and seismic loads obtained from the SAP-4 model were combined together and with other loads (Section 3.7.2) to calculate stresses in the structural members. Horizontal seismic loads were increased by a factor of 1.18 to allow 1
for impact of the fuel asemblies against the fuel storage cells. Details of te non-linear analysis performed to develop this impact factor are given below. The calculated stresses were then compared with the applicable allowable stresses to confirm the structural adequacy.

Non Linear Effects - Storage Cell/Fuel Assembly

Time history analyses were performed to account for the effects of the clearance gap between a storage cell and the fuel assembly contained therein. The method of analysis was identical to that submitted by Arkansas Power and Light Company in its letters dated October 18, 1976 and November 11, 1976, and as approved by the NRC in its Safety Evaluation Report for the Arkansas Nuclear One, Unit 1 Spent Fuel Rack Modification dated December 17, 1976. 1

The analysis was performed using an artificially generated time history whose response spectrum enveloped the floor level response spectrum for the floor of the Salem fuel storage pools.

Non-Linear Effects - Rack Modules/Pool Structures

Time history analyses were performed to account for the effect of rack modules sliding on the pool floor and impacting the pool walls at the lower wall restraints. The analytical model is shown in Figure 3.7-5. A row of four modules along the length (North-South) of the pool was modeled. Each rack module was modeled as a simplified two degrees of freedom system. Gap elements were included at all thermal expansion gaps and friction elements were provided to account for rack sliding on the pool floor. The pool walls were assumed to form a rigid boundary for the racks. 1

The method of analysis and the computer program were the same as previously used for fuel assembly/storage cell impact analyses. In addition the same artificial time history was used.

Dropped Fuel Assembly Accident

An evaluation of the effects of a postulated dropped fuel assembly accident has been performed to confirm that there would be no effect on the spacing of fuel assemblies stored in the racks. The method of design and analysis was identical to that submitted by Omaha Public Power District in it's letter dated June 2, 1976, and as approved by the NRC in its Safety Evaluation Report for the Fort Calhoun Station Unit No. 1 Spent Fuel Rack Modification dated July 2, 1976. 1

3.7.4 Results

Structural Analysis

Computer plots of the primary vibrational mode shape in each direction are presented in Figures 3.7-2, 3.7-3 and 3.7-4. The calculated natural frequencies and participation factors are given in Table 3.7-1.

The limiting load combinations and stress values for the rack members are presented in Table 3.7-2.

Non Linear Effects - Storage Cell/Fuel Assembly

The results of the analysis were that the maximum combined support reactions calculated by the non-linear time history analysis were 1.18 times the maximum combined reactions calculated by the linear elastic time history analysis. The seismic loads developed by a linear elastic analysis of the complete rack structure were, therefore, increased by a factor of 1.18 with no credit being taken for out out of phase motion between fuel assemblies. 1

Non Linear Effects - Rack Modules/Pool Structure

The non linear model was analyzed for two values of the coefficient of friction at the pool floor. The first analysis assumed $\mu = 0.3$ resulting in a maximum relative displacement between module base and the fuel pool floor of 0.034 inches (identical for all modules). Since the

initial thermal expansion allowance was taken equal to 0.11 inches for all gaps, the maximum relative displacement did not produce an impact between the rack modules and the pool wall or between adjacent modules.

In the second analysis, the coefficient of friction was conservatively reduced to 0.2. For this case the computed maximum relative displacement increased to 0.083 inches but, again, the maximum value is less than the initial clearance of 0.11 inches and no impact forces were produced. 1

In consideration of the possibility that the total thermal expansion allowance (9.55 inches may not be uniformly distributed among the modules, one additional case was analyzed. For this analysis one end module was assumed to be initially in contact with the fuel pool wall, the four remaining gaps were set equal to 0.1375 inches. This new configuration resulted in a maximum reaction force at the pool wall of 21,800 lbs. with a friction coefficient of 0.2. Many alternate distributions of the initial clearance are possible but, in view of the small relative displacements produced in the modules and the conservatively low friction coefficient it is not anticipated that any of these would result in higher impact forces.

The wall restraints were designed using the 21,800 lbs. impact force calculated above. In addition the rack module base was analysed using this impact force directly superimposed on the other seismic and dead weight loads.

Dropped Fuel Assembly Accident

Compression tests were performed on two-foot long sections of the Boral poison spent fuel cell together with the flared lead in section to determine the load-deflection characteristics of the cells. Two cases were considered. The first case is that of an assembly falling vertically directly on one cell but rotated 45° such that the corners of the assembly hit the sides of the cell in a diamond pattern. This case produces maximum force and deflection of an individual cell. The second case is that of an assembly falling vertically at the center of a group of four cells, resulting in a maximum forces applied to the rack structure. The experimentally developed load deflection curves were used to calculate the peak force and deflection resulting from the energy of a dropped assembly. The maximum drop height is 15 inches from the top of the fuel cells, since the fuel assemblies will not be moved over the fuel storage racks at a higher elevation. The maximum kinetic energy at the point of impact is 2020 ft-lbs. For the first case (diamond

pattern) the maximum force, on the impacted cell, is 25,000 lbs. and the maximum deflection is 2.5". For the second case the maximum force on each of the four impacted cells is 10,000 lbs. and the maximum deflection is 0.8". In both cases local crushing of the cell is limited to the upper seven inches of the lead-in section, above the rack module upper grid structure and above stored fuel assemblies. The stresses in all other rack members are within the allowables defined in the criteria.

In the case where the fuel assembly is dropped inside the storage cell, the fuel assembly would impact the 1/4 inch base plate at the bottom of the rack module. The impact energy will be absorbed primarily by bending deformation of the 1/4 inch base plate and a small amount of bending distortion of the base assembly beam members. The total distortion of the base plate was conservatively calculated to be approximately 1 inch. The spacing of adjacent stored fuel assemblies will not be affected. 1

The effects of a dropped assembly accident in which the assembly rotates as it drops, was also evaluated. In this case, the assembly impacts a row of storage cells and comes to rest laying on top of the rack modules.

The maximum kinetic energy of impact on one cell is conservatively calculated to be 1500 ft-lbs resulting in lower loads than the simple vertical drop case discussed above. 1

3.8 References

1. G. E. Whitesides and N. F. Cross, "KENO - A Multigroup Monte Carlo Criticality Program," CTC-5, Union Carbide Corporation Nuclear Division, September 1969. (Note: KENO-III is an updated version of the original KENO code referenced here.)

2. W. W. Porath, "CCELL Users Guide," BNW/JN-86, Pacific Northwest Laboratories, February 1972.

3. C. L. Bennett and W. L. Purcell, "BRT-1" Batelle Revised THERMOS," BNWL-1434, Pacific Northwest Laboratories, June 1970

4. L. L. Carter, C. R. Richey, and L. E. Hushey, "GAMTEC-II: A Code for Generating Consistent Multigroup Constants Utilized in Diffusion and Transport Theory Calculations," "BNWL-35, Pacific Northwest Laboratories, March 1965.

5. L. M. Petrie and N. F. Cross, "KENO IV: An Improved Monte Carlo Criticality Program", ORNL 4938, Oak Ridge National Laboratory, November, 1975.

6. N. M. Greene, et al, "AMPX - A Modular Code System for Generating Coupled Multigroup Neutron-Gamma Libraries from ENDF/B", ORNL-TM-3706, Oak Ridge National Laboratory, March, 1976.

7. K. D. Lathrop, "DTF-IV - A FORTRAN-IV Program for Solving the Multigroup Transport Equation with Anisotropic Scattering," LA-3373, Los Alamos Scientific Laboratory, July 1965

8. Personal communications, Exxon Nuclear Company with E. B. Johnson and G. E. Whitesides of Oak Ridge National Laboratory, Oak Ridge, Tennessee

9. SAP-IV, "A Structural Analysis Program for Static and Dynamic Response of Linear Systems," K. J. Bathe, E. L. Wilson, F. E. Peterson; Earthquake Engineering Research Center Report No. 73-11, Revised April 1976.

TABLE 2.0-1

GASEOUS RADIOACTIVITY RELEASES ***

Isotope	Quantity Released, Ci 1976*	1977**
Kr-85	0	0
I-131	0	0
H-3	1.5E-5	7.23E-1

* Salem Unit No. 1 began operation in December, 1976. Data reflects releases for December, 1976.

** Through June 30, 1977.

*** Zero (0) indicates below lower limit of detection.

TABLE 3.1-1

DESIGN BASE CRITICALITY PARAMETERS

FUEL ASSEMBLY	NOMINAL LATTICE CELL PARAMETERS	BUNDLE AVERAGED CELL PARAMETERS
Lattice Pitch	0.496"	0.5190"
Clad OD	0.374"	0.3773"
Clad Material	Zr-4	Zr-4
Clad Thickness	0.0225"	0.0242"
UO_2 Pellet Diameter	0.3225"	0.3225"
Pellet Density (% TD)	95.0%	94.0%
Enrichment (w/o U-235)	3.5 (specified)	3.5
Active Fuel Rods	264	264
Rod Array	17 x 17	17 x 17
Effective Array Dimensions	8.432" x 8.432"	8.432" x 8.432"
Control Rod Guide Tubes (Zr-4)	0.482"OD x 0.016" wall(upper) 0.429"OD x 0.016" wall(lower)	N/A
Instrument Tube (Zr-4)	0.482"OD x 0.016" wall	N/A
Maximum Lineal Loading of U-235 per Fuel Assembly	44.69 gm per cm	N/A

FUEL STORAGE CELL		
Boron Areal Density (Between Adjacent Fuel Assemblies)	0.04 gm B-10 (min) per cm^2	1
Stainless Steel Wall Thickness	0.108 inch (min)	
Nominal ID	8.969 inches	

TABLE 3.1-2

INFINITE MEDIA MULTIPLICATION FACTORS

Nominal Fuel Rod Lattice Cell Parameters (CCELL)	$k_{inf} = 1.418$
Bundle Averaged Cell Parameters (CCELL)	$k_{inf} = 1.430$

TABLE 3.1-3

W 17 x 17 FUEL ASSEMBLY REACTIVITY SENSITIVITY

		U-235 Loading, g U-235/cm, (axial)	k_{inf}
ENRICHMENT, (w/o):	3.5	44.22	1.430
	3.7	47.25	1.442
	3.9	49.80	1.453
PELLET DENSITY, (% TD):			
(at 3.5 w/o and 20°C Fuel + Moderator Temperature)			
	90	42.34	1.431
	94	44.22	1.430
	97	45.63	1.429
	100	47.05	1.428
FUEL AND MODERATOR TEMPERATURE, (°C):			
(at 3.5 w/o and 94% TD Pellet Density)			
	20	44.22	1.430
	60	44.22	1.427
	100	44.22	1.423

TABLE 3.1-3A

BORON SENSITIVITY REACTIVITY CALCULATIONS

NITAWL - XSDRNPM

Boron Loading* gm/cm^2 B-10	Delta k_{inf}
0.030	+0.016
0.040**	0.0
0.050	-0.011

1

* Between fuel assemblies

** Minimum specified for analysis and fabrication. Average B-10 loading will be 5-10% greater than the minimum to assure that minimum loading is achieved.

TABLE 3.1-4

REACTIVITY CALCULATIONS

Fuel Type: W 17 x 17 3.5 w/o

Storage Cell: Stainless Steel Clad Boral - 0.199" total thickness (nominal)

ID: 8.986" (assumed) 1

Center-to-Center Spacing: 10.50" (nominal)

B-10 Loading: 0.020 g B-10/cm^2 per cell plate

Water gap (between adjacent storage cells): 0.953" (minimum)

Case	Description	$k_{eff} \pm \sigma$ NITAWL-XSDRNPM-KENO IV (123 group)
1	Nominal	0.908 ± .004
2	Worst case geometery, at a pool temperature of 100°C	0.923 ± .004

T 3.1-5

THEORY - EXPERIMENT CORRELATIONS

Fuel

Density, gm UO_2/cc	10.18
w/o U-235:	2.70
Pellet Dia., in.:	0.300

Cladding

Material:	304 SS
Thickness, in.:	0.0161

SQUARE LATTICE SPACING (IN)	MODERATOR-TO-FUEL VOLUME RATIO	EXP'TL. RESULTS CYLIND. CORE RADIUS CM	CCELL-DTF-IV CALCULATED REACTIVITY (k_{eff})	CCELL-KENO-III CALCULATED REACTIVITY (k_{eff})	NITAWL-XSDRNPM-KENO IV CALCULATED REACTIVITY (k_{eff})
0.435	1.405	26.820	1.016	1.008 ± .006	1.007 ± .005
0.470	1.853	24.294	1.015	1.014 ± .005	1.013 ± .005
0.573	3.357	23.600	1.011	1.003 ± .005	-
0.615	4.078	24.771	1.009	1.010 ± .005	-
0.665	4.984	27.172	1.005	1.005 ± .005	-

Tl 79/1 44/45

TABLE 3.1-6

DATA USED FOR BENCHMARK ANALYSIS

FUEL ROD-WATER LATTICE

Rod Material	Uranium Metal
Enrichment	4.95 w/o U-235
% Theo. Density	99 (18.9 gm/cm^3 U)
Rod OD, cm	0.762 (unclad)
Rod Height, cm	30.0
Pitch, cm	2.05 (square)
Vm/Vf Ratio	8.22

DEPLETED URANIUM BLOCK

Material	Uranium Metal U (0.185)
% Theo. Density	100 (19.04 gm/cm^3 U)
Length, cm	60.4
Width, cm	21.7
Height, cm	25.9 (centered)

BORAL SHEET

Core Material	B_4C and Al
w/o B_4C in Core	38.9 (ORNL measurement)
Core Density, g/cm^3	2.63
Core Thickness, cm	0.429
Clad Material (Type)	1100 Al
Clad Thickness, cm	0.104
Length, cm	47.114
Height, cm	25.876 (centered)
Total Width, cm	0.637

TABLE 3.1-7

CALCULATED K_{EFF} VALUES FOR ORNL CRITICAL LATTICES

Case	Lattice Number	Number of Rods	Critical Water Height Above Lattice, cm	CCELL-KENO III (18 group) $k_{eff} \pm \sigma$	CCELL-KENO III (18 group) 95% Confidence Level	NITAWL-XSDRNPM-KENO IV (123 group) $k_{eff} \pm \sigma$	NITAWL-XSDRNPM-KENO IV (123 group) 95% Confidence Level
			Rod Water Lattice Only				
1	1A	208	7.1	0.988 ± .006	0.976 - 1.000	-	-
2	2A	195	15.24	0.998 ± .006	0.986 - 1.010	0.999 ± .006	0.987 - 1.011
			Rod Water Lattice + U (0.185) Block				
3	3B	245	9.5	1.001 ± .006	0.989 - 1.013	0.993 ± .006	0.981 - 1.005
			Rod Water Lattice + U (0.185) Block + Boral Sheet				
4	4C	324	15.24	1.088 ± .005	1.028 - 1.048	1.000 ± .005	0.990 - 1.010
5	5C	359	11.94	1.087 ± .006	1.025 - 1.049	-	-

T1 79/1 47/48

TABLE 3.5-1

THERMAL HYDRAULIC PARAMETERS FOR 55.4 KW
FUEL ASSEMBLY LOCATED AT POOL CENTER IN WIDTH DIRECTION

FLOW TYPE	SINGLE PHASE	TWO PHASE
System Parameter	Case 1	Case 2
Cooling Loop Operational	Yes	No
Fuel Assembly Heat Generation Rate, kW	55.4	55.4
Fuel Assembly Coolant Bulk Inlet Temperature	150	239
Fuel Assembly Coolant Mass Flow Rate lb/hr	3970	20768
Fuel Assembly Coolant Bulk Discharge Temperature, °F*	197.8	239
Bundle Coolant Bulk Maximum Temperature, °F	197.8	242.0
Fuel Rod Film Temperature Drop °F, Max.	10.1	4.3
Fuel Rod Peak Cladding Temperature, °F	208.9	245.3
Equilibrium Quality*	0	.01
Void Fraction*	0	.665

*At top of assembly

TABLE 3.7-1

NATURAL FREQUENCIES AND MODAL PARTICIPATION FACTORS

Mode #	Frequency (H_z)	Participation Factor X	Y	Z	Notes
1	6.055	~ 0.	0.81	~ 0.	
2	6.403	23.43	~ 0	.19	Primary X-mode
3	6.685	~ 0.	~ 0.	~ 0.	
4	7.606	~ 0.	21.63	.17	Primary Y-mode
5	11.759	~ 0.	~ 0.	~ 0.	
6	12.230	~ 0.	~ 0.	~ 0.	
7	12.747	.41	~ 0.	~ 0.	
8	12.769	~ 0.	~ 0.	~ 0.	
9	13.147	~ 0.	1.13	~ 0.	
10	13.824	3.21	~ 0.	~ 0.	1
11	13.973	~ 0.	2.56	~ 0.	
12	14.407	~ 0.	~ 0.	~ 0.	
13	18.406	7.66	~ .0001	~ 0.	
14	19.946	~ 0.	.0005	~ .0001	
15	20.783	~ 0.	4.09	~ 0.	
16	20.899	~ 0.	.003	~ .001	
17	21.406	1.92	.0006	.0001	
18	22.368	3.73	~ 0.	~ 0.	
19	22.853	~ 0.	6.72	~ 0.	
20	23.002	~ 0.	.0006	~ 0.	
21	24.743	~ 0.	~ 0.	20.36	Primary Z-mode
22	26.176	~ 0.	3.72	~ 0.	
23	28.518	5.17	.011	.002	
24	29.191	~ .0001	.005	.0002	
25	29.492	.58	.004	.0006	
26	31.977	~ 0.	.0001	1.32	
27	32.146	~ .0001	.44	~ 0.	
28	43.614	.026	6.04	.023	

TABLE 3.7-2

COMPARISON OF MOST LIMITING STRESSES

AND ALLOWABLE STRESSES ON STRUCTURAL MEMBERS

Structural Member	Most Limiting Load Combination	Type Of Stress	Most Limiting Combined Stress Ratio	Allowable Limit
Upper Grid Bars	$D+L_c+T_o$	Bending	1.045	1.0
Top Peripheral Beam	D+E	Bending + Axial	0.905	1.0
Mid-Height Peripheral Beam	D+E	Bending + Axial	0.737	1.0
Vertical Corner Angles	D+E	Bending + Axial	0.812	1.0
Base Angles	D+E	Bending + Axial	0.993	1.0
Outer Base Channel	D+E	Bending + Axial	0.757	1.0
Center Base Channel	D+E	Bending + Axial	0.978	1.0
Outer Shear Diaphragms	D+E	Membrane	0.94	1.0
Internal Shear Diaphragm	D+E	Membrane	0.48	1.0
Fuel Cells	$D+L_c+T_o$	Bending + Axial	0.602	1.0
Interties	D+E	Bending + Axial	0.603	1.0
Feet	D+E	Bending + Axial	0.99	1.0
Module Base Restraint	D+E	Compression	0.417	1.0

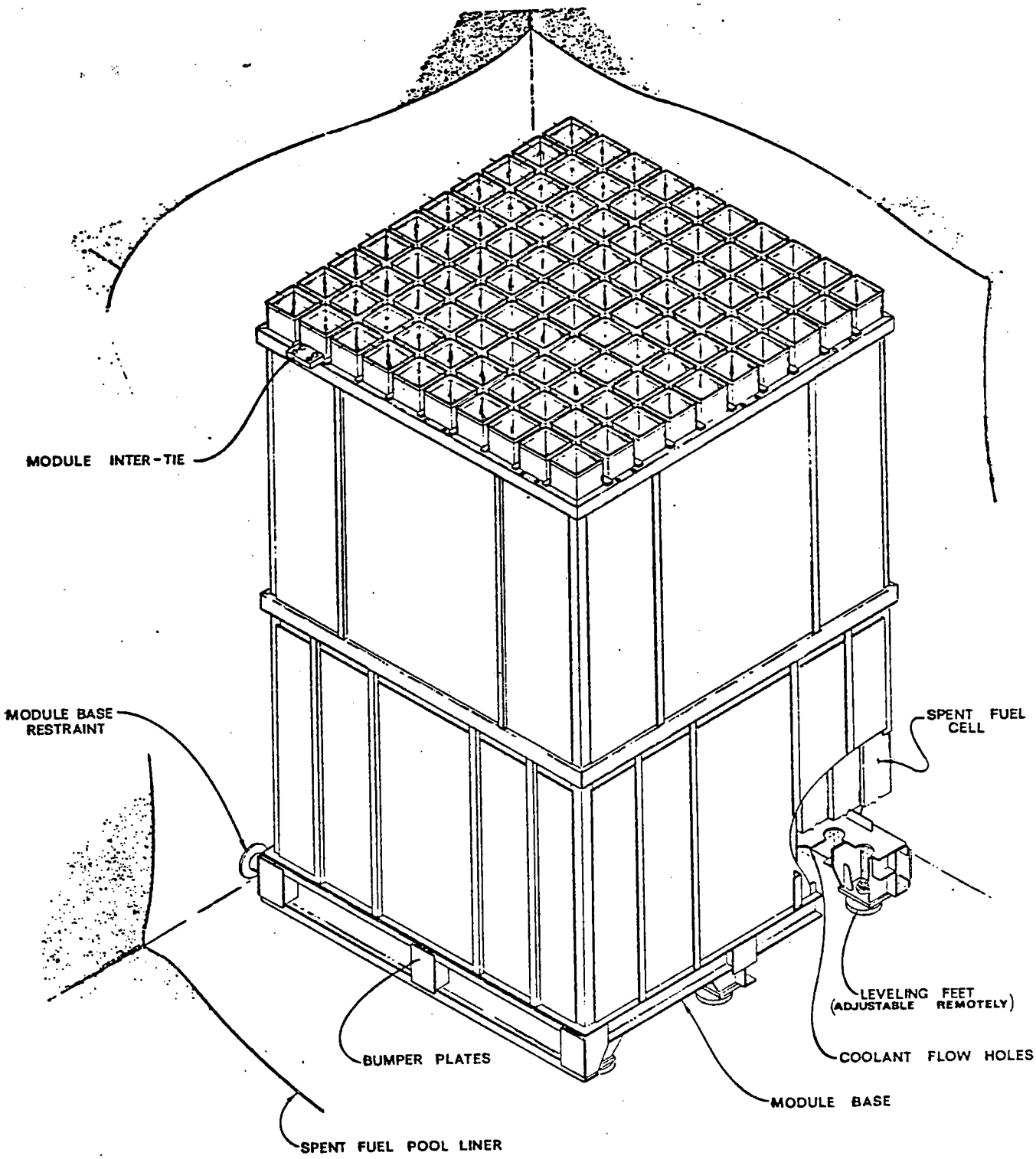

Figure 1.2-1 Typical High Density Poison Spent Fuel Module

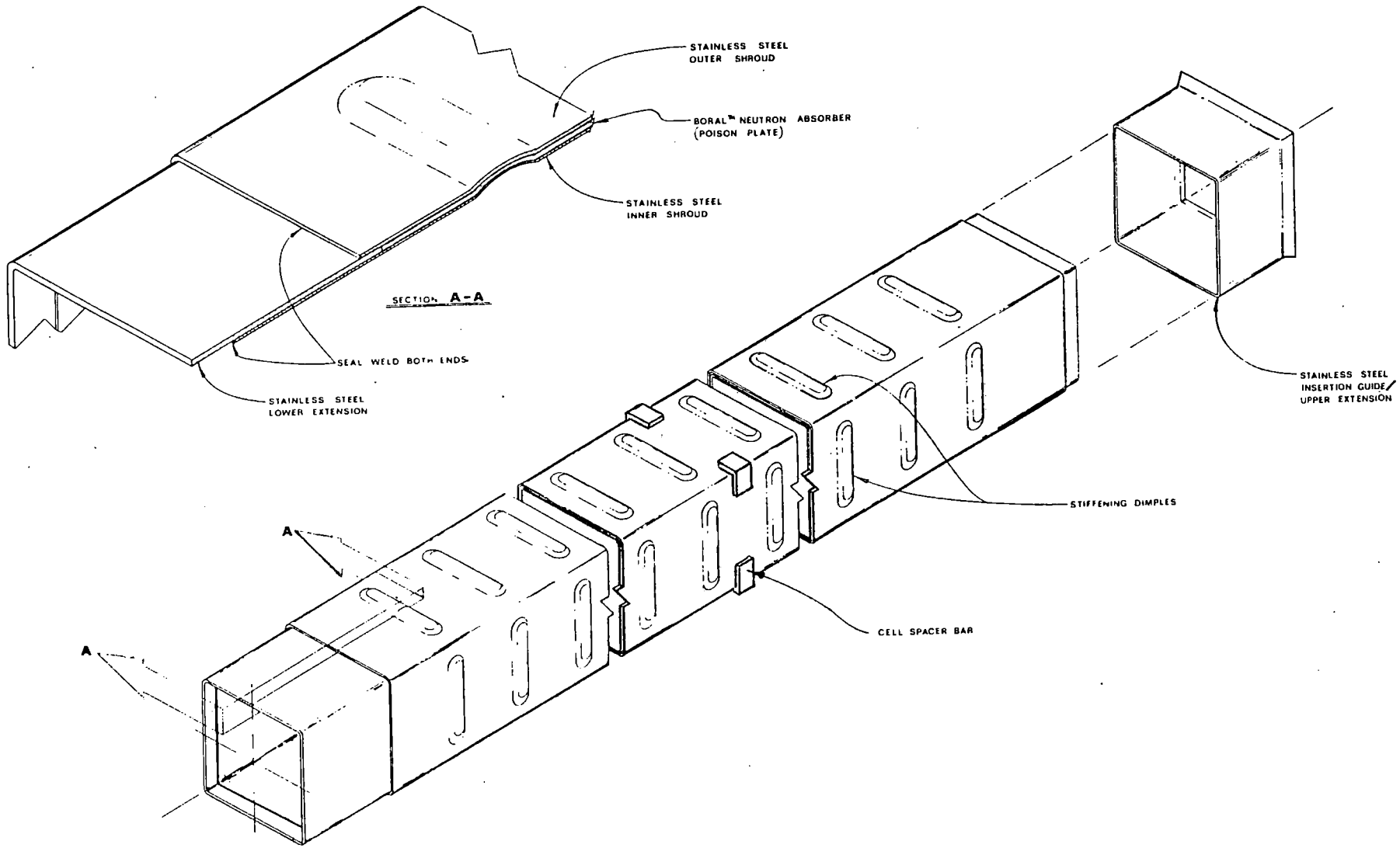

Figure 1.2-2 Boral Poison Spent Fuel Cell

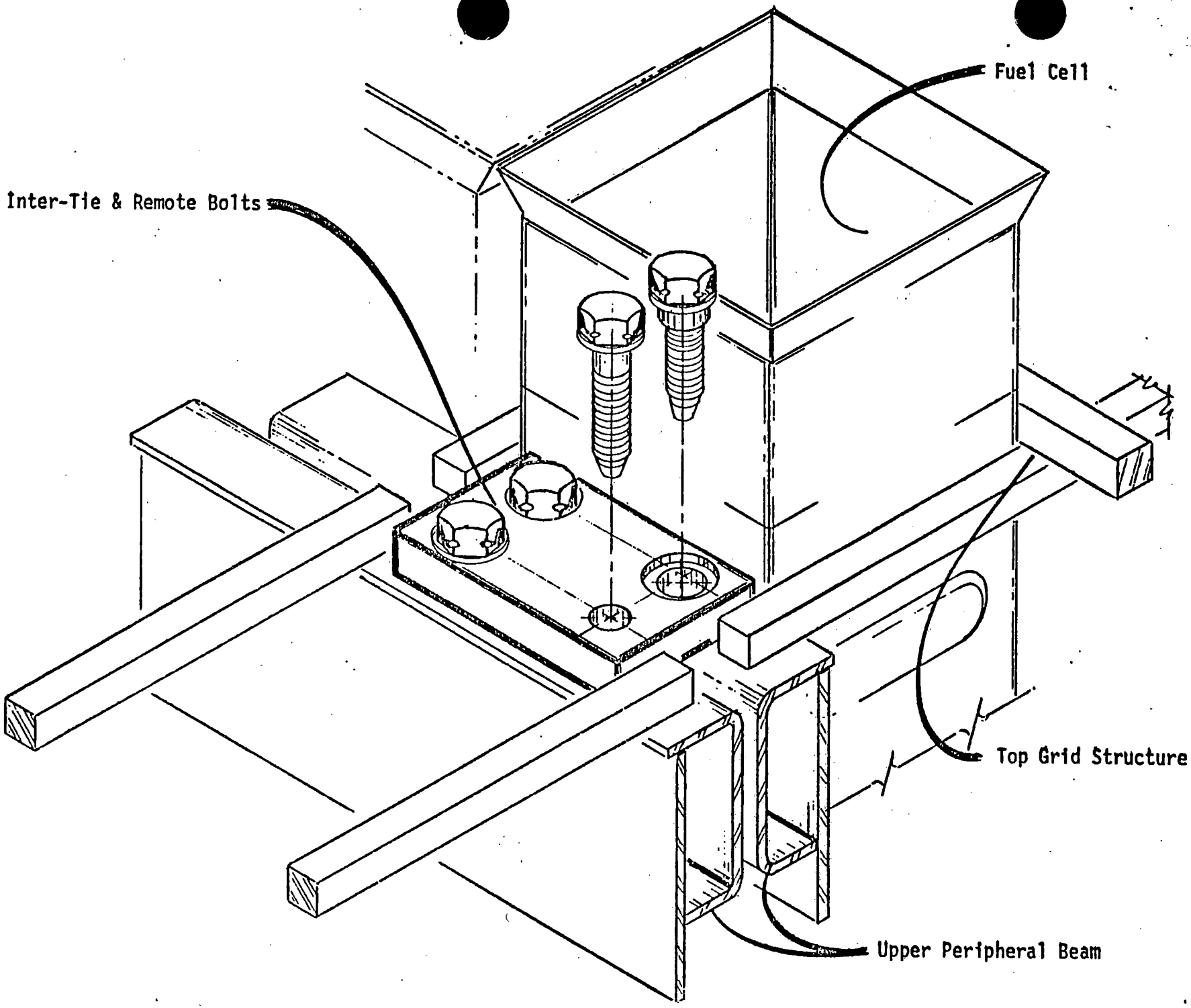

Figure 1.2-3 Fuel Storage Module Intertie

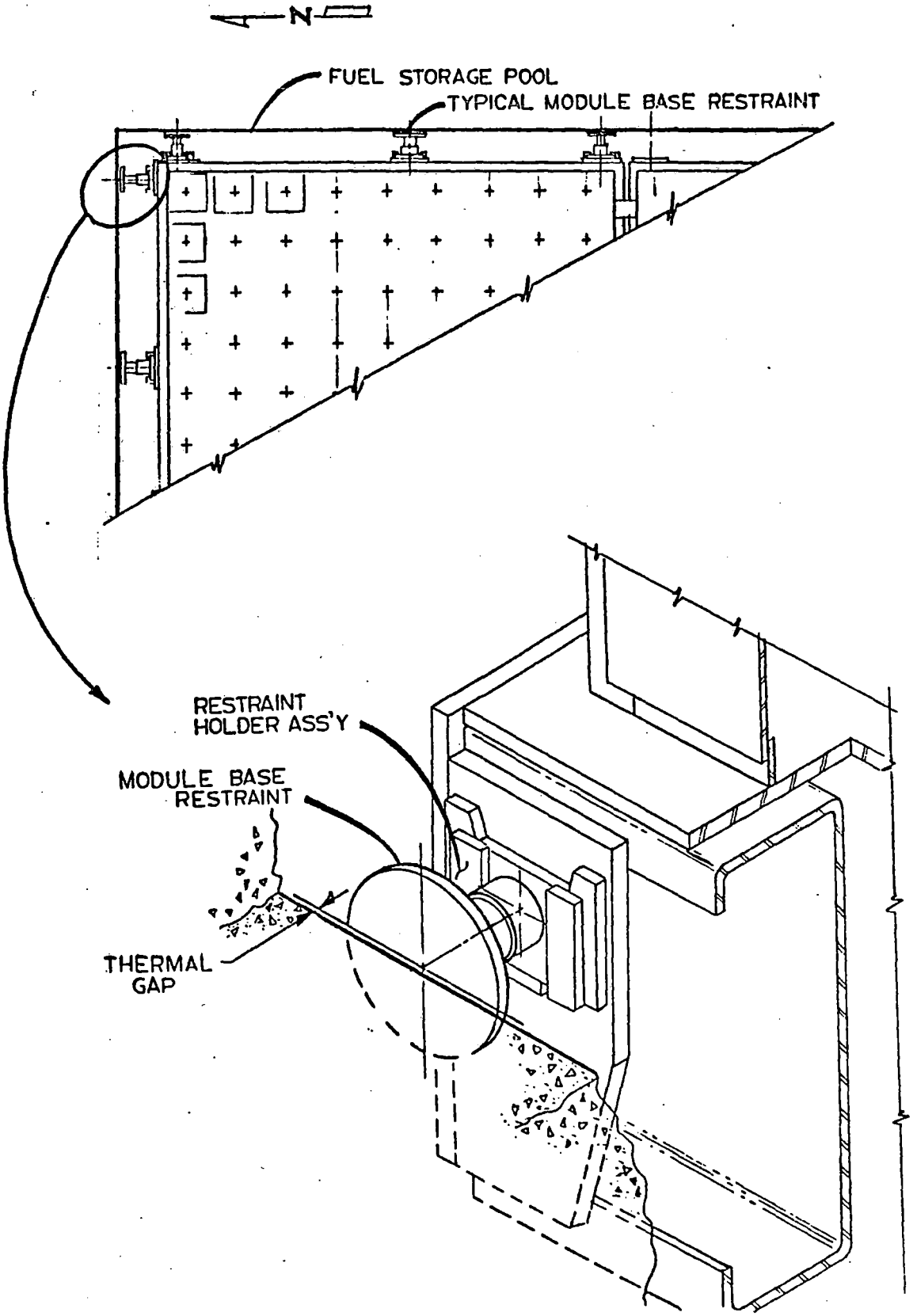

Figure 1.2-4 Module Base Restraint

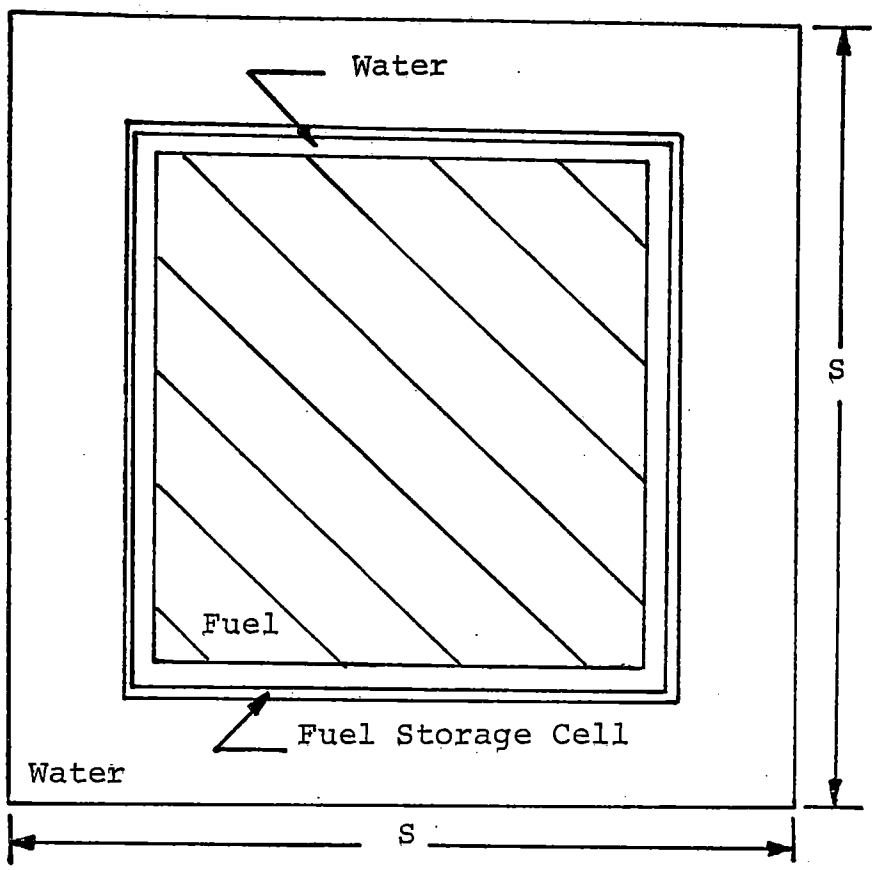

Fuel Assembly:	8.432" X 8.432" (effective size)
Fuel Storage Cell:	8.969" Nominal ID
S (Nominal Array Spacing):	10.5"

Figure 3.1-1 Nominal Storage Arrangement

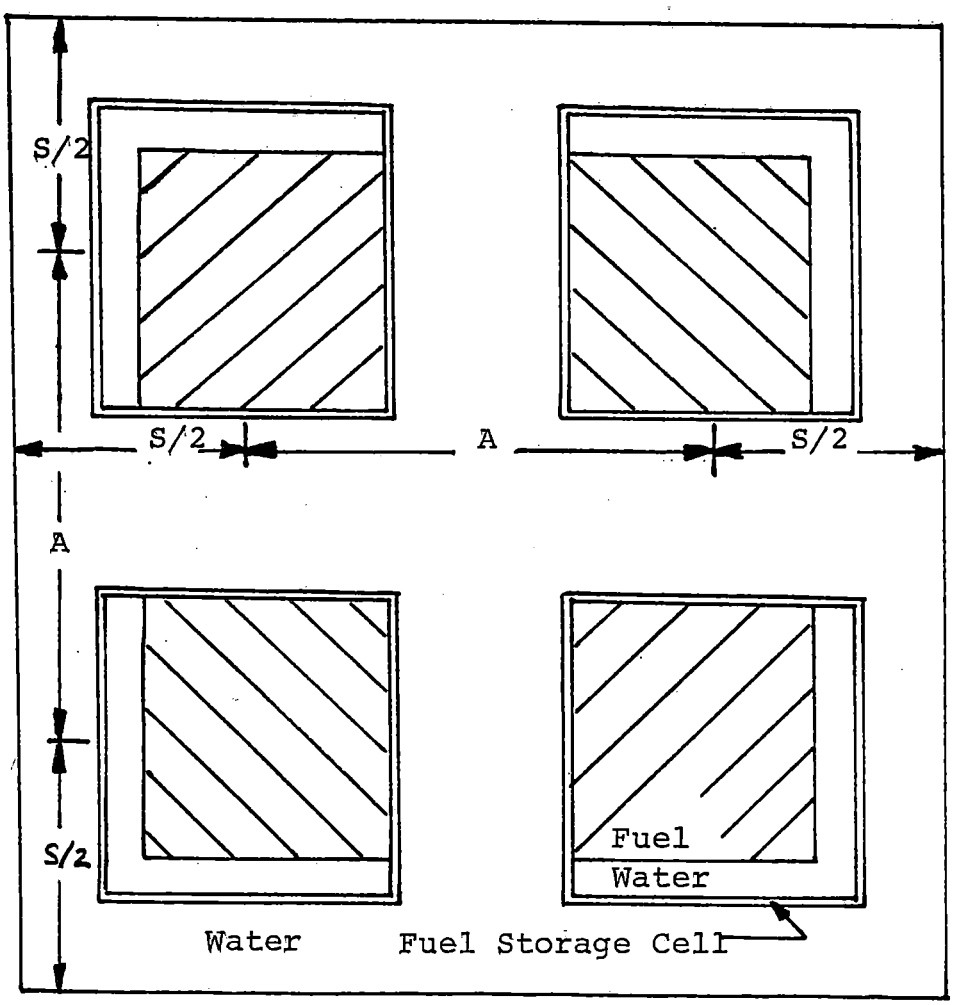

Dimensions (Fuel Storage Cell Center-to-Center Spacing)

S: 10.500" |1
ΔS: 0.125"
A: 10.375" |1

Figure 3.1-2 Worst Case Fuel Assembly Arrangement

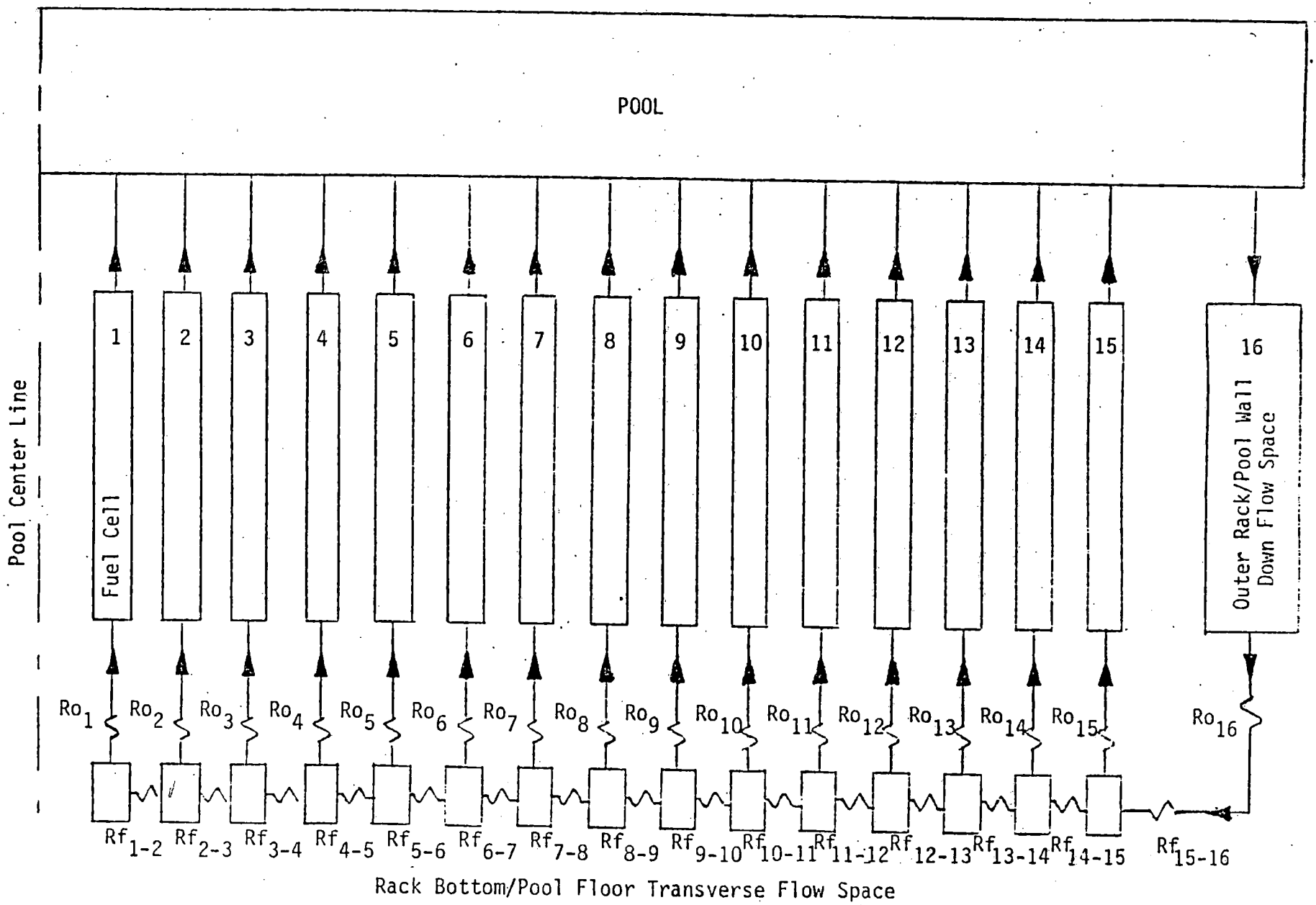

Figure 3.5-1 Natural Convection Thermal - Hydraulic Network for High Density Racks

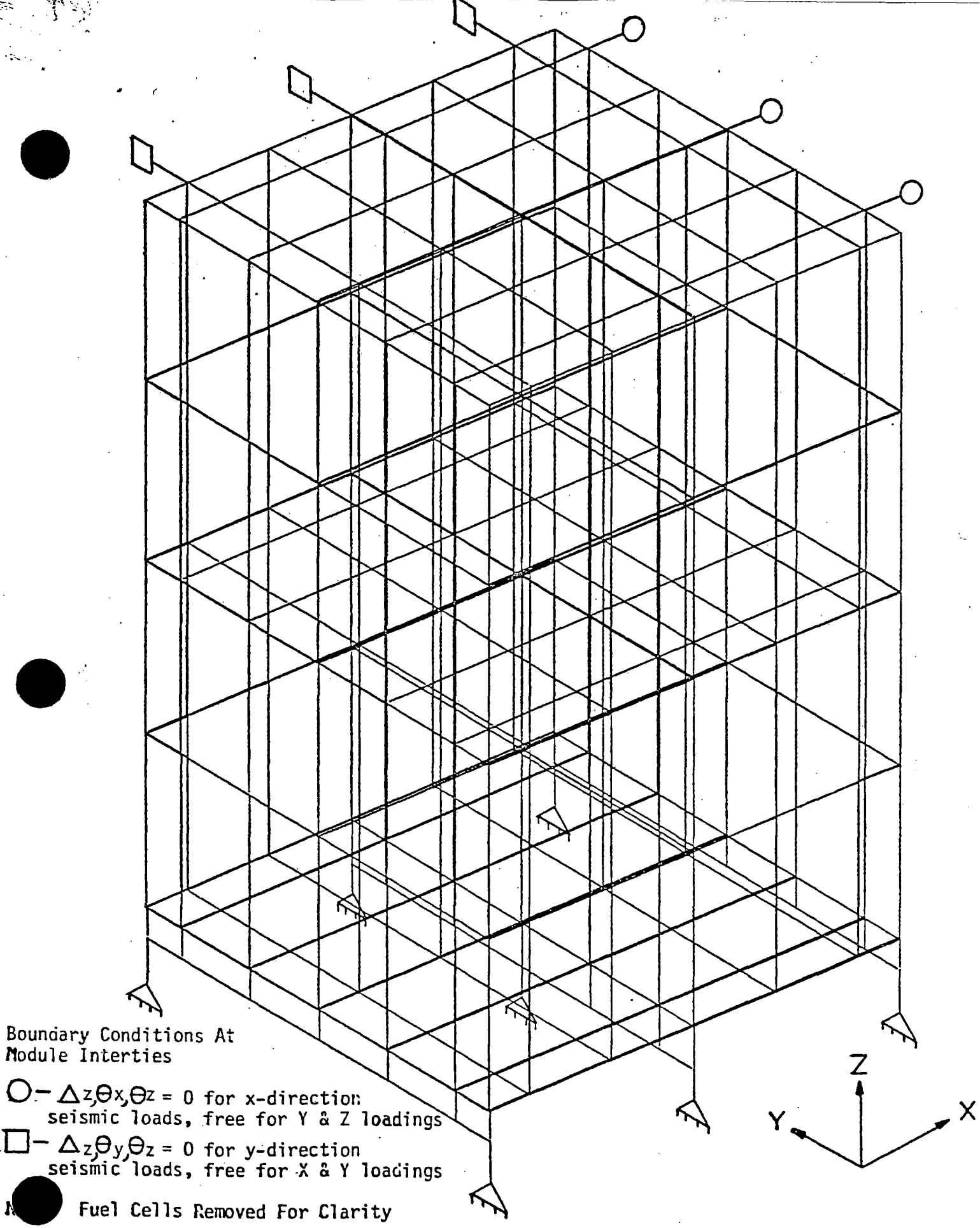

Figure 3.7-1 Seismic Model

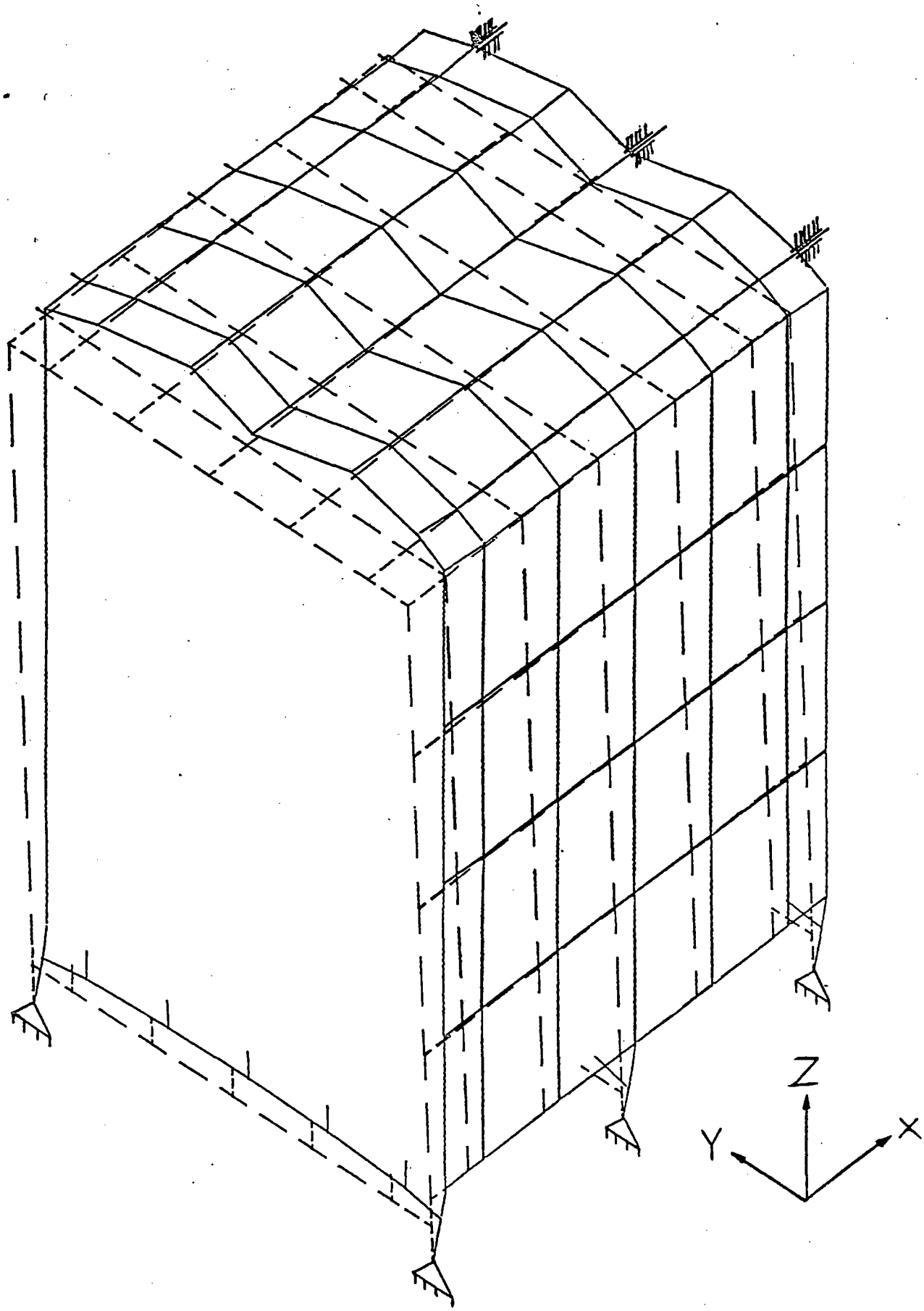

Figure 3.7-2 Mode Shape 2 (Primary X Mode)

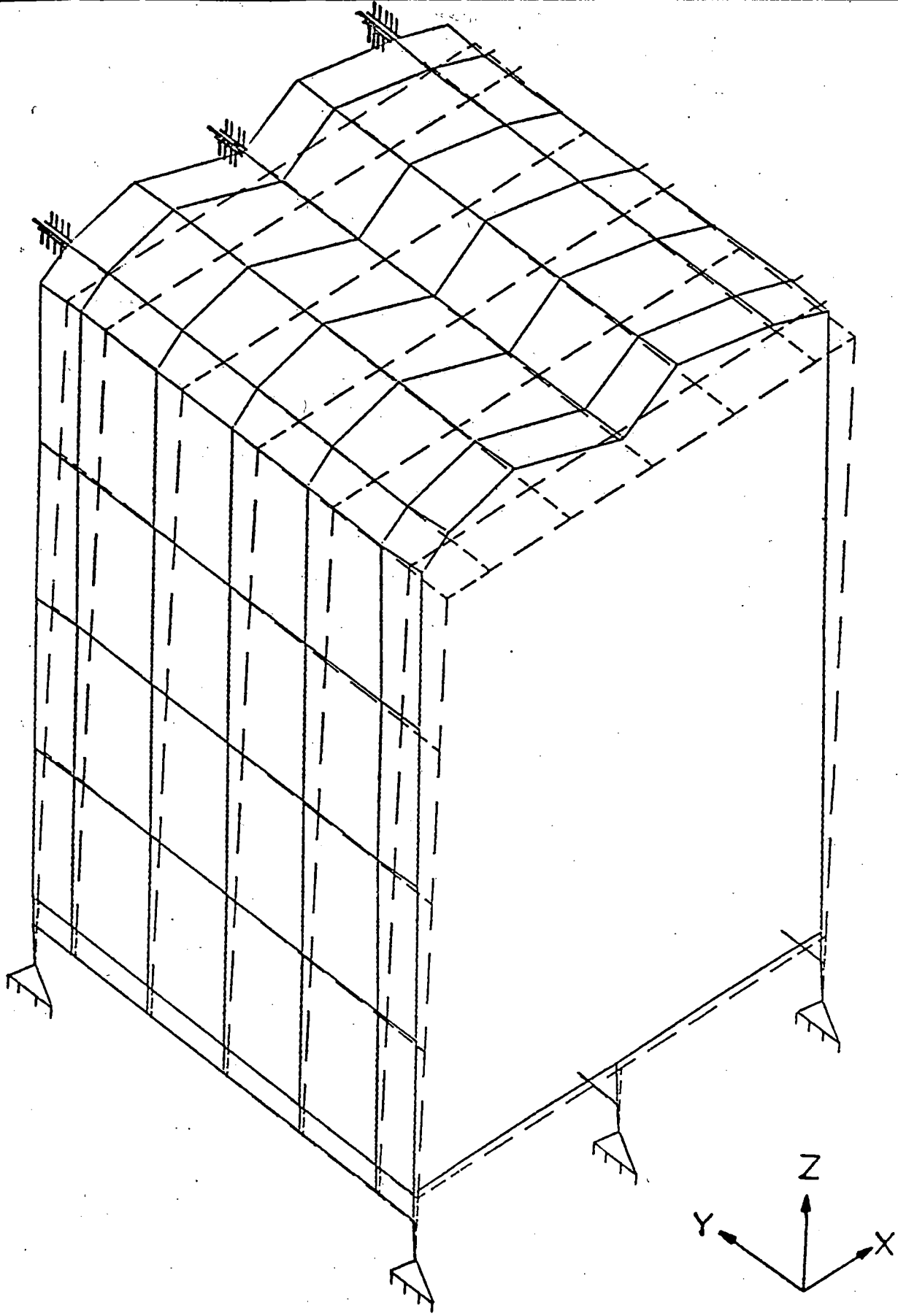

Figure 3.7-3 Mode Shape 4 (Primary Y Mode)

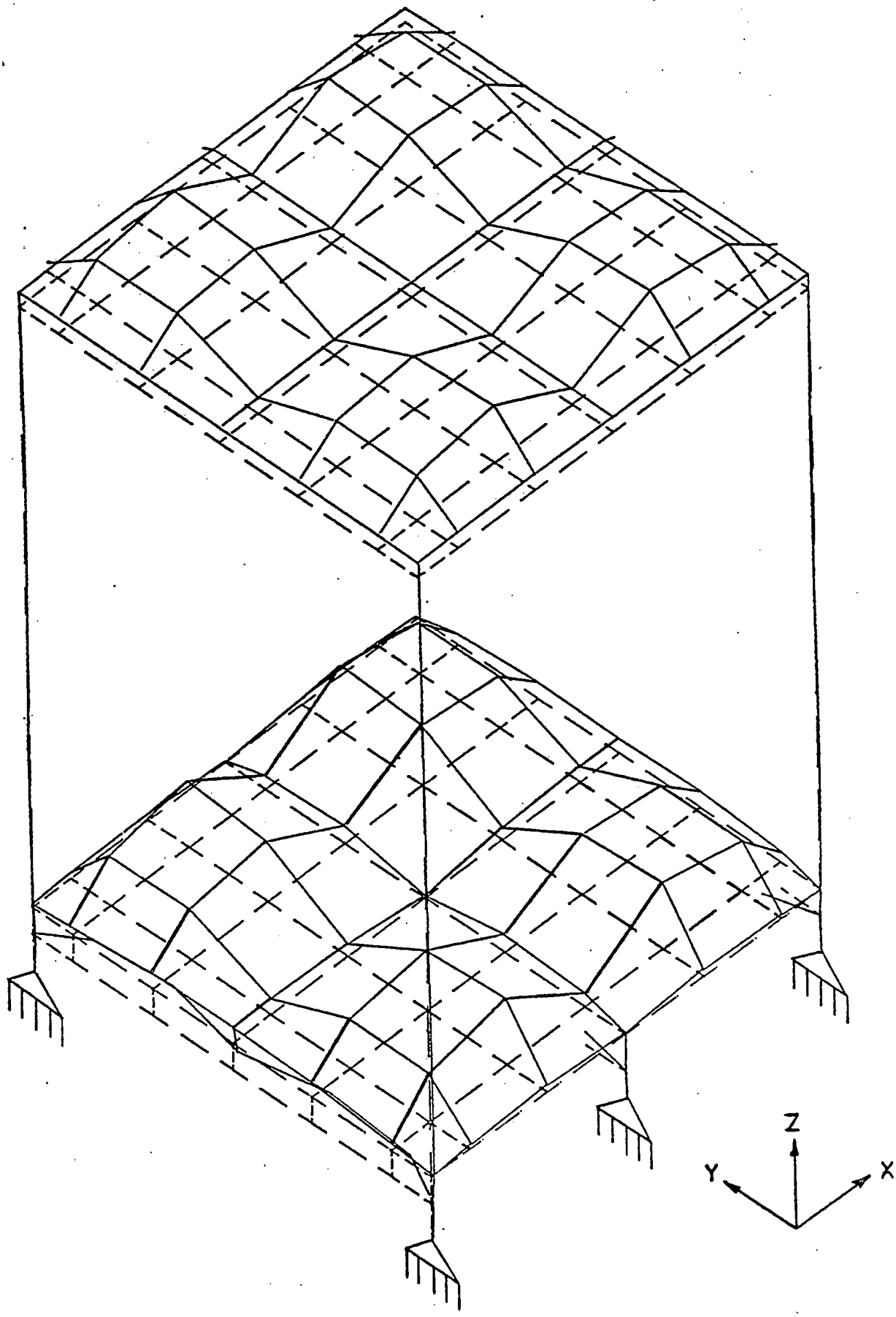

Figure 3.7-4 Mode Shape 21 (Primary Z Mode)

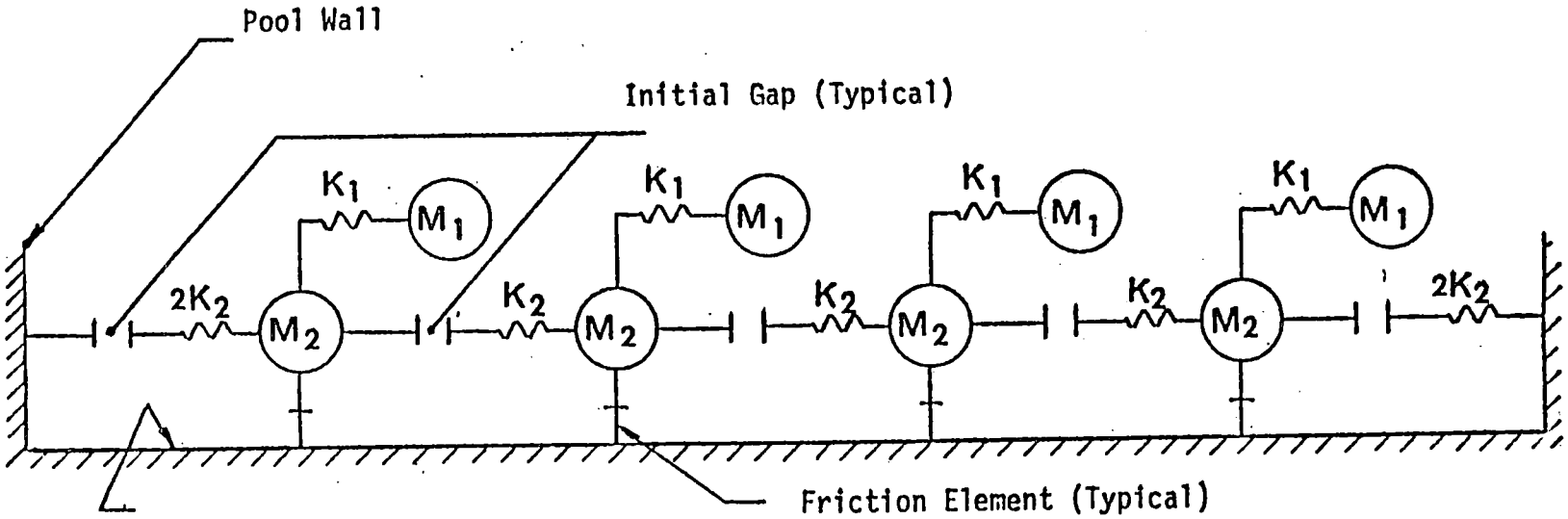

M_1 = Mass of Module (excluding base)

M_2 = Mass of Module Base

K_1 = Cantilever Stiffness

K_2 = Base Stiffness

Figure 3.7-5 Nonlinear Model for Determining Wall Impact Forces