RAIO-0119-64318

January 28, 2019

Docket No. 52-048

U.S. Nuclear Regulatory Commission
ATTN: Document Control Desk
One White Flint North
11555 Rockville Pike
Rockville, MD 20852-2738

SUBJECT: NuScale Power, LLC Supplemental Response to NRC Request for Additional Information No. 466 (eRAI No. 9482) on the NuScale Design Certification Application

REFERENCES:
1. U.S. Nuclear Regulatory Commission, "Request for Additional Information No. 466 (eRAI No. 9482)," dated May 04, 2018
2. NuScale Power, LLC Response to NRC "Request for Additional Information No. 466 (eRAI No.9482)," dated October 26, 2018

The purpose of this letter is to provide the NuScale Power, LLC (NuScale) supplemental response to the referenced NRC Request for Additional Information (RAI).

The Enclosures to this letter contain NuScale's supplemental response to the following RAI Question from NRC eRAI No. 9482:

- 06.02.01.01.A-18

Enclosure 1 is the proprietary version of the NuScale Supplemental Response to NRC RAI No. 466 (eRAI No. 9482). NuScale requests that the proprietary version be withheld from public disclosure in accordance with the requirements of 10 CFR § 2.390. The proprietary enclosures have been deemed to contain Export Controlled Information. This information must be protected from disclosure per the requirements of 10 CFR § 810. The enclosed affidavit (Enclosure 3) supports this request. Enclosure 2 is the nonproprietary version of the NuScale response.

This letter and the enclosed responses make no new regulatory commitments and no revisions to any existing regulatory commitments.

If you have any questions on this response, please contact Paul Infanger at 541-452-7351 or at pinfanger@nuscalepower.com.

Sincerely,

Zackary W. Rad
Director, Regulatory Affairs
NuScale Power, LLC

Distribution: Gregory Cranston, NRC, OWFN-8H12
Omid Tabatabai, NRC, OWFN-8H12
Samuel Lee, NRC, OWFN-8H12

Enclosure 1: NuScale Supplemental Response to NRC Request for Additional Information eRAI No. 9482, proprietary

Enclosure 2: NuScale Supplemental Response to NRC Request for Additional Information eRAI No. 9482, nonproprietary

Enclosure 3: Affidavit of Zackary W. Rad, AF-0119-64319

Enclosure 1:

NuScale Supplemental Response to NRC Request for Additional Information eRAI No. 9482, proprietary

Enclosure 2:

NuScale Supplemental Response to NRC Request for Additional Information eRAI No. 9482, nonproprietary

Response to Request for Additional Information
Docket No. 52-048

eRAI No.: 9482
Date of RAI Issue: 05/04/2018

NRC Question No.: 06.02.01.01.A-18

Conservatism in the NPM Initial Conditions for the CNV Safety Analyses

To meet the General Design Criteria (GDCs) 16, 38, and 50 of Appendix A to 10 CFR Part 50 relevant to the containment design basis and guided by the Design-Specific Review Standard (DSRS) for NuScale Small Modular Reactor (SMR) Design Section 6.2.1, the staff is reviewing the applicant's analytical models and assumptions used in the containment response analysis methodology (CRAM) to determine if the licensing-basis safety analyses are acceptably conservative. Specifically, the staff needs to assess the conservatism of the licensing-basis models, constitutive/closure relations, model input parameters, and initial/boundary conditions used for the applicant's NPM design basis event (DBE) containment response analyses, in order to conclude that the results are valid over the applicable range of DBE conditions.

A limiting DBE model is expected to use the most conservative NPM initial and boundary conditions for the CNV safety analyses, based on the most biased reactor operating conditions and the limiting technical specifications. These initial conditions and assumptions should be based on the range of normal operating conditions with consideration given to maximizing the calculated peak containment pressure and temperature. In this regard, the applicant is requested to address the following three questions and update the FSAR, accordingly. The regulatory bases identified above are applicable to all questions in this RAI.

In Table 5-1 of the Containment Response Analysis Methodology Technical Report (TR-0516-49084-P, Rev. 0), the nominal CNV free volume is adjusted by {{ }}2(a),(c) percent as a conservative initial condition for the containment response analysis to account for uncertainty in design, blockage in containment by components, such as, piping, etc. However, the base NRELAP5 model described in {{ }}2(a),(c) has not been updated for numerous geometry changes reported in {{ }}2(a),(c), so it is not clear that

a {{ }}2(a),(c) percent CNV free volume adjustment is adequate and would also cover the thermal expansion of the reactor pressure vessel (RPV) under operating conditions. The staff also noted that {{ }}2(a),(c) used {{ }}2(a),(c) percent conservatism in CNV free volume but that was reduced to {{ }}2(a),(c) percent in Rev. 2. Please explain why a {{ }}2(a),(c) percent reduction in containment volume is justified for a NRELAP5 base model that may not reflect the current design. If necessary, please update the NRELAP5 base model and resubmit the updated NRELAP5 models and their results for the limiting DBEs for CRAM, as submitted in response to RAI 8783; or justify how the peak CNV pressure and temperature results remain conservative with an outdated base model. When the licensing basis containment analyses are updated, the FSAR and the decks also need to reflect the rise of initial CNV pressure from 2 psia to 3 psia, as was concluded by RAI 8793, Question 29717 (06.02.01-2).

NuScale Response:

<u>Supplemental DCD Updates</u>

NuScale letter RAIO-1018-62335 transmitted the response to eRAI 9482, Question 06.02.01.01.A-18, which provided the results of the updated containment response analysis incorporating the following design changes:

- Reduction of the assumed maximum initial reactor pool temperature from 140 deg-F to 110 deg-F;
- Increasing the assumed minimum initial reactor pool level from 55 feet to 65 feet;
- Increase in the module protection system (MPS) emergency core cooling system (ECCS) actuation for high containment (CNV) level to a range of 264 inches to 300 inches;
- Removal of ECCS actuation on low reactor pressure vessel (RPV) level.

In addition, the response to eRAI 9482, Question 06.02.01.01.A-18 credited an increase in the CNV design pressure.

RAIO-1018-62335 included conforming changes to FSAR Chapter 6 and TR-0617-49084 to reflect the analysis and NPM changes but also indicated that additional DCD changes would be provided in a supplemental response to eRAI 9482, Question 06.02.01.01.A-18. The CNV response analysis description and results provided by RAIO-1018-62335 are complete and unaffected by DCD changes presented by this supplemental response.

The Containment Response Analysis Methodology Technical Report, TR-0516-49084, Revision 0, as updated by the RAIO-1018-62335 markup, accurately reflects the updated containment response analysis provided to the NRC for audit, its model and modeled NPM changes. The minor updates to Chapter 6 included in this supplemental response conform the updated containment response analysis and were inadvertently not included in the RAIO-1018-62335 markup changes.

Accordingly, this supplementary response provides the following additional FSAR changes associated with the updated CNV response analysis and CNV design pressure change:

- Updates to FSAR Chapter 3 reflecting the change in CNV design pressure and hydrostatic test pressure;
- Update to FSAR Table 3C-7 to reflect the DBE peak pressure values used for equipment qualification;
- Updates to FSAR Chapter 6 reflecting the change in CNV design pressure and hydrostatic test pressure;
- Updates to FSAR Chapter 9 to reflect reduction of the assumed initial reactor pool temperature from 140 deg-F to 110 deg-F and increase in initial assumed reactor pool level from 55 feet to 65 feet;
- Updates to FSAR Chapter 15 to reflect removal of the analytical limit for ECCS actuation on low RPV level, along with the change in the analytical limit range for ECCS actuation on high CNV level

This supplementary response also provides the following additional technical and topical report changes associated with the updated CNV response analysis and CNV design pressure change:

- Updates to the The Non-LOCA Accident Analysis Methodology Topical Report, TR-0516-49416, Combustible Gas Control Technical Report, (TR-0716-50424), Containment Leakage Integrity Assurance Technical Report (TR-1116-51692), CNV Ultimate Pressure Integrity Technical Report, (TR-0917-56119), Containment Response Analysis Methodology Technical Report, (TR-0516-49084) and Mitigation Strategies for Extended Loss of AC Power Event (TR-0816-50797) to reflect the change in CNV design and hydrostatic test pressure.

Description of these updates and their bases are provided in the following paragraphs:

<u>FSAR Markups</u>

Section 3.6 is updated to indicate essential components of the CNV are qualified for the new CNV design pressure value of 1050 psia.

Section 3.8.2 and Table 3.8.2-1 are updated to reflect the new hydrostatic pressure values of 1298 psig at the highest point of the CNV test boundary and 1375 psig at the lowest point of the test boundary, along with the new CNV design pressure value.

The design basis event environmental qualification pressure value in Appendix 3C is updated to reflect the limiting peak pressure value (986 psia or 971.3 psig) in the updated CNV response analysis.

Section 6.2.1.6, Table 6.2-1 and Figure 6.2-2a are updated to reflect the new hydrostatic pressure values of 1298 psig at the highest point of the CNV test boundary and 1375 psig at the lowest point of the test boundary, along with the new CNV design pressure value. Section 6.3.2.4 and Table 6.3-2 are updated to indicate that the external design pressure for the ECCS valves and hydraulic lines have an exterior design pressure of 1050 psia, which is the new CNV design pressure value.

The response to RAI 9482, Question 06.02.01.01.A-18 in RAIO-1018-62335 included a Technical Specification markup revising the UHS pool minimum required action level from 55 feet to 65 feet. However, this does not indicate that the UHS minimum depth for post-accident decay heat removal changed. The operational analytical limit for UHS minimum depth for decay heat removal remains 55 feet. Sections 9.1.3, Table 9.2.5-1 and Figure 9.1.3-5 are updated to indicate that the Technical Specification minimum UHS level of 65 feet is only credited for establishment of the initial CNV wall temperature assumption in the containment response analysis and is not credited for containment heat removal purposes. Table 9.2.5-1 is also updated to reflect the new Technical Specification maximum reactor pool temperature of 110 deg-F. Table 9.2.5-1, Note 2 indicates that the pool heat up calculation uses 140 deg-F as a starting point. This note is not revised, since using 140 deg-F as a starting point is conservative with respect to the reactor pool heatup.

Table 15.0-7 is updated to reflect removal of the low RPV riser level analytical limit for ECCS actuation.

Technical and Topical Report Markups

TR-0917-56119-P, Revision 0, "CNV Ultimate Pressure Integrity" is revised to provide conforming changes reflecting the increase in CNV design pressure from 1000 psia to 1050 psia. The CNV design pressure change does not impact the CNV ultimate pressure value.

TR-0716-50424, Revision 0, "Combustible Gas Control" is updated to reflect the new CNV design pressure. The combustible gas detonation pressure is unaffected by the change in CNV design pressure.

TR-1116-51692, Revision 0, "NuScale Containment Leakage Integrity Assurance" is revised to remove the specific value for the peak containment accident pressure (Pa) and indicate that the value is provided by FSAR Section 6.2.1. The value for Pa is indicated as >1000 psia, which bounds the current peak accident pressure of 986 psia. Therefore, the updated report design basis leakage limit is approximately 17.5 SCFH since 17.5 SCFH is the converted leakage rate at 1000 psia. This will eliminate the need to revise multiple documents whenever the containment response analysis is revised. The peak accident pressure and temperature values are given in Section 6.2.1.1. The report is also revised to reflect the new CNV design pressure and hydrostatic pressure values.

TR-0516-49084, Revision 0, "Containment Response Analysis Methodology" is revised to reflect the updated CNV design pressure of 1050 psia. This results in a revised peak pressure to design pressure margin of approximately 6%. These are the only changes to the report, since the containment peak pressure/temperature analysis is unaffected by the change in CNV design pressure.

TR-0816-50797, Revision 0, "Mitigation Strategies for Extended Loss of AC Power Event" is revised to reflect the updated CNV design pressure of 1050 psia.

The Non-LOCA Accident Analysis Methodology Topical Report, TR-0516-49416, Revision 1 is revised to reflect removal of ECCS actuation on RPV riser low level, along with the change in the high CNV analytical limit range.

FSAR Sections 7.1 and 7.2 will be updated in a future supplement to this RAI question response to reflect removal of ECCS actuation on RPV riser low level, along with the change in the high CNV analytical limit range. FSAR Chapter 19 will also be revised in a future supplementary response to revise sequence tables to reflect removal of RPV low level ECCS actuation and high CNV level ECCS actuation range. In addition, TR-0616-49121, Revision 1, "Instrument Setpoint Methodology" and TR-0516-49422, Revision 0, "LOCA Evaluation Methodology" will also be updated in a future supplement to this RAI question response to reflect removal of ECCS actuation on RPV riser low level, along with the change in the high CNV analytical limit range.

Note: the sensitivity sensitivity analysis documented in Long Term Cooling (LTC) Technical Report Section 5.2 utilized an inlet pressure of 1000 psia, which was the previous CNV design

pressure. Since the current CNV peak pressure (986 psia) is bounded by this inlet pressure value, the sensitivity does not need to be updated. Therefore, the LTC Technical Report does not need to be updated to reflect the CNV design pressure increase.

Impact on DCA:

FSAR Chapter 3, 6, 9 and 15, Technical Reports TR-0716-50424, TR-1116-51962, TR-0917-56119, TR-0516-49084, and TR-0816-50797, along with Topical Report TR-0516-49416 have been revised as described in the response above and as shown in the markup provided with this response.

- Active safety-related components [e.g., ECCS valves, DHRS actuation valves, and containment isolation valves (CIVs)] are shown to operate during refueling. As part of the start-up sequence for an NPM, each of the safety-related ECCS, DHRS, and CIVs are repositioned. These system line-up activities provide assurance the safety-related valves are operable.
- The NPM containment is not a building. It is a pressure vessel designed and fabricated to ASME Code Section III Class 1 requirements.
- Piping of the NPM, including secondary system piping, is made of corrosion-resistant stainless steel (Type 304 or 304L).
- MSS and FWS piping inside the containment boundary and under the bioshield is designed to RCS design pressure and temperature.

RAI 03.06.02-6

- MSS and FWS piping inside the CNV meets LBB criteria.
- HELBs inside the CNV are limited to NPS 2 piping.
- The length and size of high-energy piping is small compared to large, light-water reactors for which the regulatory guidance was written.
- The NPM containment is operated at a vacuum.
- Equipment and piping inside the NPM containment are not covered by insulation. This is important for multiple reasons:

RAI 03.06.02-6

  - Jet impingement does not dislodge insulation that could lead to blockage of long-term-cooling recirculation.
  - Detection of small leakage cracks is not impeded by retention of moisture in insulation.
  - The bare piping is readily inspectable during refueling, because insulation does not need to be removed to observe deposits, discoloration, or other signs of degradation.
  - Potential corrosive substances (e.g., chlorides) cannot be trapped and held in contact with the piping surface.

RAI 03.06.02-6, RAI 06.02.01.01.A-18S1

- Safety-related and essential components inside the NPM containment are qualified to be functional after exposure to saturated steam at containment design pressure up to 1050~~00~~ psia, requiring designs that are robust.
- The small NPM containment results in congestion that makes difficult the addition of traditional piping restraints and the separation of essential components from break locations. Consequently, whipping pipes have a limited range of motion before encountering an obstacle.
- Containment isolation valves are outside of containment. Where two valves in series are required (e.g., GDC 55 and 56), both are in a single-piece valve body (i.e., no piping or welds between CIVs, precluding breaks in between). Also, the lines directly connected to the primary system or the containment have only a single weld in the area between the containment wall and the CIV.

  - In the NPM bay, no ruptures are postulated.
  - In the NPM outside the pool area, dislodged insulation has no effect on long-term NPM cooling.

RAI 03.06.02-6

Thus, allowable impingement pressure on SSC is considerably higher than that in large pressurized water reactors where insulation stripping is relevant.

RAI 03.06.02-6

- The maximum load imposed by the impinging jet is that of the thrust force of the broken pipe at the break exit.
  - Because only NPS 2 RCS pipes are locations of postulated breaks in the CNV, the load is limited to the maximum operating pressure times the flow area times the thrust coefficient (1.26 for steam and two-phase jets). The total load imposed by the jet is approximately 5220 lbf.

RAI 03.06.02-6

  - The applied load is adjusted by a target shape factor (e.g., 0.576 for a jet striking a cylinder normal to its axis) and by the cosine of the angle from perpendicular for the intersection of the jet and the target surface. These two adjustments reduce the imposed load to below 2000 lbf, or approximately two times the weight of a reactor recirculation valve.
  - Finally, the jet rapidly traverses the zone of influence (ZOI) caused by whip of the broken pipe, moving more than 100 ft/sec within a few degrees of motion. The RVVs are not directly in line with a location in which a whipping pipe could come to rest and are, therefore, exposed to the jet only transiently. The RVVs are approximately a foot in diameter, meaning that they are within the jet for a maximum of 0.01 of a second. Exposing a 1000 lbm, thick-walled, metal component to 2000 lbf for 0.01 of a second or less is a negligible load that can be omitted from load combinations that include dead weight and seismic accelerations of over 10 g.

RAI 03.06.02-6, RAI 06.02.01.01.A-18S1

- The impingement damage threshold of 190 psi is a sufficient measure of the structural integrity of components, but does not confirm functionality. Essential components inside the CNV are qualified for a CNV design condition of 1050~~00~~ psia saturated steam. This exceeds the 190 psi impingement acceptance threshold of 190 psia by a factor of more than five and is sufficient basis to consider functionality after jet impingement to be demonstrated.
- Jet impingement on concrete is neither a pressure load nor an erosion concern.

RAI 03.06.02-6

Having addressed the resistance of the NuScale design to jet impingement damage, the HELB jet conditions must be determined. Three categories of jets are considered:

RAI 03.06.02-6, RAI 06.02.01.01.A-18S1

Table 3.6-4: NuScale Power Module Piping Systems Design and Operating Parameters

Process System (NuScale System)	ASME Code	NPS Size	Design		Operating[4]	
			Press. (psia)	Temp. (°F)	Press. (psia)	Temp. (°F)
CVCS (RCS)	Class 1	2	2100	650	1870[2]	625[2]
CVCS (CNTS, CVCS)	Class 3[1]	2[1]	2100	650	1870[2]	625[2]
MSS (steam generator system, CNTS)	Class 2	8 & 12	2100	650	500	585
FWS (steam generator system, CNTS)	Class 2	4 & 5	2100	650	550	300
DHRS	Class 2	2 & 6	2100	650	1400	635[3]
RCCWS (CRDS)	Class 2	2	165	200	80	121
RCCWS (CNTS)	Class 2	4	1050~~00~~	550	80	121
CFDS (CNTS-inside CNV)	Class 2	2	165	300	85	100
CFDS (CNTS-outside CNV)	Class 2	4	1050~~00~~	550	85	100
CES (CNTS)	Class 2	4	1050~~00~~	550	0.037	100

Notes

(1) The weld between the CIV and the safe-end is NPS 4 SCH 160 and is designated as a Class 1 piping weld

(2) Represents the highest normal operating pressure for the injection line and highest normal operating temperature for the RPV high point degasification line.

(3) Conservatively represents the highest normal operating temperature for the steam portion (i.e., NPS 6 portion) of the DHRS.

(4) The initial conditions are based on full-power operation rather than on hot standby operation, for which the NuScale equivalent is referred to as hot shutdown. During hot shutdown, MSS pressure and temperature are approximately 300 psia and 420°F, respectively, and primary pressure and temperature are approximately 1850 psia and 420°F, respectively.

approximately the bottom of the CNV top head. The reactor pool provides a passive heat sink for containment heat removal under LOCA conditions. The CNV rests on the reactor pool floor at elevation 25'-0". Within the reactor pool, the upper CNV is supported laterally by three support lugs. Figure 3.8.2-1 shows the support locations and elevations, and Figure 3.8.2-3 shows a plan view of the CNV lug in the reactor pool. The CNV is designed to withstand the environment of the reactor pool as well as the high pressure and temperature of a design basis accident.

RAI 06.02.01.01.A-18S1

Calculated peak CNV pressures and temperatures (discussed in Section 6.2.1) are less than the CNV internal design pressure of 1,050~~00~~ psia and design temperature of 550 degrees F.

3.8.2.1.3 Containment Vessel Support

RAI 03.08.04-31S1

The CNV rests on a support skirt flange that has an approximate outside diameter of 141 inches and an approximate inside diameter of 120 inches. The support skirt sits on the bottom elevation of the reactor pool (building elevation of 25'-0") in the RXB within a passive skirt support ring. The support skirt has holes equally spaced around the skirt to allow steam to escape and prevent steam building up and blanketing the underside of the head. The passive skirt support ring provides lateral restraint for the bottom of the CNV. Figure 3.8.2-2 shows the CNV support skirt and passive skirt support ring at the bottom of the reactor pool.

The upper CNV is supported laterally on three sides by support lugs. Figure 3.8.2-1 shows the location and elevation of the lugs. The CNV support lugs contact restraints in the reactor bay walls. The lug restraints are part of the RXB (see Section 3.7.2.1.2.2). Figure 3.8.2-3 shows a plan view of the CNV orientation with the restraints on the reactor bay walls. The loads from the CNV are transferred through the supports to the bay walls by bearing. Each NPM is housed in an individual bay during operation.

3.8.2.1.4 Access and Manways

A flanged connection is provided between the upper and lower sections of the CNV. The flanged connection allows the CNV to be disassembled and provides access to the RPV during refueling operations and maintenance. Figure 3.8.2-1 provides the location and elevation of the flange connection. The flanged connection has a double O-ring seal with provisions for leak detection in the annular span between the dual O-rings.

Containment vessel manways and access openings on the CNV upper section provide access to components located inside the CNV not readily accessible via the main flange. Access to the steam plenums for steam generator inspection is provided through four 38-inch diameter openings. The openings are equally spaced around the CNV across from the main steam plenum access located in the RPV. Two 44-inch diameter access openings are provided for pressurizer heater

The CNV support lugs use a set-in type design and therefore constitute part of the ASME Code Class MC component. As permitted by ASME Code, Section III, NCA-2134(c), the complete CNV is designed, constructed and stamped as an ASME Code Class 1 vessel in accordance with ASME Code, Section III, Subsection NB, except that overpressure protection is in accordance with ASME Code, Section III, Article NE-7000 in lieu of ASME Code, Section III, Article NB-7000.

The CNV support skirt is classified as an ASME Code Class MC support. The bolting for the RPV upper support ledge is classified as ASME Code Class 1 supports. The top auxiliary mechanical access structure mounting assemblies are in the support load path for the ASME Code Class 2 NPM top auxiliary mechanical access structure and, therefore, are classified as ASME Code Class 2 supports. However, all these items are constructed as ASME Code Class 1 supports in accordance with ASME Code, Section III, Subsection NF.

The CNV materials conform to the requirements of ASME Code, Section III, Article NB- 2000. The CNV fabrication conforms to the requirements of ASME Code, Section III, Article NB-4000 and Article NF-4000. Nondestructive examination of pressure-retaining and integrally attached materials meet the requirements of ASME Code, Section III, Article NB-5000 and Article NF-5000.

3.8.2.3 Loads and Load Combinations

RAI 06.02.01.01.A-18S1

Stresses and fatigue for the CNV pressure retaining components have been evaluated in accordance with ASME Code, Section III, Subsection NB. The loads for which the CNV is designed are:

DW	Deadweight of the CNV which includes the weight of the structure, any internal equipment or piping systems and enclosed water. Deadweight refers to any moments or forces due to the deadweight.
B	Buoyancy provided to the CNV by the reactor pool water.
P_{des}	CNV internal pressure for Design conditions is 1,050~~00~~ psia. The external pressure for Design conditions is 60 psia.
P	Highest operating pressure load due to normal and abnormal operating conditions resulting from pressure variations either inside or outside the CNV. The lowest internal pressure of less than 0.1 psia during normal operating conditions is also considered. The external pressure during operating conditions is 60 psia.
T_{des}	The CNV temperature for Design conditions is 550 degrees F, and the CNV support temperature for Design conditions is 300 degrees F.
T	The maximum temperature of the CNV during normal operating conditions is 295 degrees F and the minimum temperature is 40 degrees F.
TH	Transient loads due to normal operating conditions and anticipated operational occurrences, infrequent and accident, resulting from thermal and pressure variations either inside or outside the CNV.
EXT	External mechanical loads from structures other than piping, such as support structures and nonstructural attachments to the CNV (e.g., access platforms/ladders, instrument enclosures, etc.).
M	Piping mechanical and thermal loads produced on the nozzle penetrations and safe ends from piping system due to pressure and thermal variations in the piping system.

R	Pressure and transient loads as a result of a steam generator tube failure are evaluated. Dynamic loads as a result of a steam generator tube failure are not significant and not evaluated.
REA	Rod ejection accident (REA) pressure and transient loads are evaluated as a result of a rod being ejected form the core. No loss of the RCS pressure boundary occurs and dynamic loads as a result of a rod ejection are not significant.
LOCA	Loss-of-coolant accident dynamic loads produced by a postulated pipe break on a primary coolant pipe with a break larger than RCS make-up. There are no piping systems in the NPM that fall into this category. So no LOCA loads are evaluated. Pipe breaks and spurious valve openings that occur in the NPM are evaluated as design basis pipe breaks (DBPBs).
MSPB	Main steam pipe break (MSPB) dynamic loads due to a postulated pipe break in the main steam pipe system. Main steam piping inside of the CNV is covered by leak before break so no postulated failures inside of the CNV are considered. Main steam pipe breaks may occur outside of the CNV and are considered.
FWPB	Feedwater pipe break (FWPB) dynamic loads due to a postulated pipe break in the feedwater pipe system. Feedwater piping inside of the CNV is covered by leak before break so no postulated failures inside of the CNV are considered. Feedwater pipe breaks may occur outside of the CNV and are considered.
DBPB	Design basis pipe break other than FWPB, MSPB, or LOCA dynamic loads due to a postulated pipe break or spurious valve actuation of the reactor safety valve, reactor vent valve, or reactor recirculation valve. This includes chemical and volume control system pipe breaks in RPV high point degasification, pressurizer spray, RCS discharge and RCS injection piping inside of containment.
H	Hydrostatic test pressure of a minimum of 1.25 x P_{des} or ~~1,250~~1,298 psig and a maximum of ~~1,325~~1,375 psig at the lowest point of the CNV. The hydrostatic test is performed at a test temperature greater than 70 °F, but not greater than 140 degrees F.
P_{g1}	Hydrogen detonation short duration (less than 5 msec) pressure pulse of 852 psia resulting from a combustible gas that results from a fuel-clad metal-water reaction followed by an uncontrolled hydrogen burn during a post-accident condition. Evaluated per the rules defined in 10 CFR 50.44, 10 CFR 50.34 and RG 1.7, "Control of Combustible Gas Concentrations in Containment," Revision 3.
P_{g2}	Hydrogen detonation with deflagration-to-detonation transition short duration (less than 5 msec) pressure pulse of 3,834 psia resulting from a combustible gas that results from a fuel-clad metal-water reaction followed by an uncontrolled hydrogen burn during a post-accident condition. Evaluated per the rules defined in 10 CFR 50.44, 10 CFR 50.34 and RG 1.7.
SSE	Safe shutdown earthquake, the CNV is designed to withstand vertical and lateral loading due to seismic ground accelerations considering the appropriate damping values for the CNV in accordance with RG 1.61, "Damping Values for Seismic Design of Nuclear Power Plants," Revision 1. The operating basis earthquake (OBE) is defined as 1/3 of SSE. In accordance with Appendix S of 10 CFR 50, OBE seismic loads need not be explicitly analyzed in the design analysis; however, they are considered in the fatigue analysis.

RAI 06.02.01.01.A-18S1

Pressure Loading

Design of the CNV includes a maximum internal pressure applied to all inside surfaces. The design pressure of 1,050~~00~~ psia bounds all service level pressures except for hydrostatic test conditions. Hydrostatic test conditions use a minimum pressure of 1.25 times the design pressure (1,298~~1,250~~ psig~~psia~~) as specified by ASME Code, Section III, paragraph NB-6221. During normal operating conditions, pressure inside the CNV is maintained at a pressure less than the saturation pressure corresponding to the reactor

pool pressure; this results in a vacuum condition. The internal pressure variation that occurs inside the CNV during abnormal conditions is defined by the transient loading.

During normal and abnormal conditions the external design pressure on the CNV is 60 psia.

Seismic Loading

The methodologies and structural models that are used to analyze the dynamic structural response, due to seismic loads acting on the NPM, are described in Appendix 3A.

Blowdown Loading

Short-term transients are those caused by the failure or actuation of Class 1 and 2 piping and valves, and include high-energy line breaks. The evaluation of short-term transients within the NPM is addressed in Appendix 3A. These events potentially result in system internal pressure waves and asymmetric cavity pressurization waves exterior to the pipe break or valve outlet, and require special treatment due to the rapidly changing thermal hydraulic conditions and the resulting dynamic mechanical loads.

Transient Loading

Design basis normal, anticipated operational occurrences, and infrequent events and accident events are categorized into ASME Service Levels (A-D) and evaluated. Section 3.9.1.1 provides the transient categorization and the number of cycles that are anticipated over the design life of the CNV.

Most of the design basis events are simulated using NRELAP5 (see Section 3.9.1.2). Results from the NRELAP5 analysis for representative nodes and control variables for various regions of the CNV are selected to provide representative time history results. Time history pressure, temperature, phase composition, velocity and mass flow rate transient results are provided for various regions inside and outside the CNV up to the outermost isolation valve. A few of the design basis events are simple in nature. Characterization of the time history results for these events can be made based on the event definition and do not require an NRELAP5 analysis in order to adequately analyze the event.

The design basis events that are simulated using NRELAP5 use the NRELAP5 base model. The NRELAP5 base model contains the NPM reactor core, hydraulic regions representing the primary and secondary fluid systems, containment and reactor pool. The NRELAP5 base model include heat structures to simulate heat transfer between the regions, and both safety and non-safety controls to simulate plant actions and operations. See Section 1.5.1.6 for discussion of validation of the NRELAP5 software and Section 6.2.1.1.1 for further discussion of software's use in CNV analyses.

Time-history thermal analysis data are applied to CNV finite-element thermal models to determine CNV metal temperatures for the design basis events. The resulting temperature gradients in the CNV from the thermal analysis and NRELAP5 pressure

The load combinations used for the design of the CNV follow the same load combinations specified for the RPV, which follow the guidelines provided in NUREG-0800, Standard Review Plan 3.9.3 for ASME Code Class 1, 2 and 3 components and component supports, and core support structures. These load combinations differ slightly from the suggested load combinations provided in RG 1.57 for metal primary reactor containment system components. Some of the differences are load combination of seismic loads with LOCA loads evaluated to service level C, the service level used in evaluating hydrogen detonation loads and loads resulting from a pipe break, i.e., pipe whip, jetting, etc.

The load combinations provided in RG 1.57 are intended for structures designed, fabricated, inspected, and tested to ASME Code, Section III, Subsection NE requirements. The load combinations used for the CNV are typical load combinations used for vessels designed, fabricated, inspected, and tested to ASME Code, Section III, Subsection NB requirements. Vessel load combinations and allowable limits differ slightly from containment structures because the inspection and testing requirements for vessels are more restrictive, which allows a higher design limit. Justification is provided below why this is acceptable for the CNV.

RAI 06.02.01.01.A-18S1

As previously discussed, during normal operation, the inside of the CNV is maintained under a vacuum and is partially submerged in the reactor pool to just below the upper head. The reactor pool is the ultimate heat sink that removes residual core decay heat during normal and accident conditions. The CNV has a design pressure and temperature of 1,050~~00~~ psia and 550 degrees F, which is greater than typical pressurized water reactor (PWR) containments. The CNV has a relatively low volume compared to typical large PWR metal containments. The nominal internal volume is 6,144 ft^3 with no internal sub-compartments. The design prevents isolated pockets of concentrated gases. The upper portion of the CNV is fabricated of low-alloy carbon steel with stainless steel cladding on the inside and outside surfaces. The bottom portion of the CNV is fabricated of stainless steel. Typical PWR metal containment structures are constructed from carbon steel plate.

As stated in previous sections, the CNV is an ASME Code, Section III Class MC component; however, the CNV is designed, fabricated, inspected, and tested as an ASME Code, Section III, Subsection NB Class 1 component. The pressure boundary forgings and weld filler materials are tested for mechanical and fracture toughness to the requirements of ASME Code, Section III, Article NB-2000. The CNV is a high-quality, shop-fabricated vessel, fabricated to the requirements of ASME Code, Section III, Article NB-4000, with all low-alloy steel welds post-weld heat treated in the shop. Many ASME Code requirements for an NB Class 1 and a Class MC vessel are similar. However, one significant difference is in preservice weld inspection. The main welds forming the pressure boundary shell are Category A, B and C full-penetration butt welds. In an NB Class 1 vessel, these welds are required to have a volumetric and either liquid penetrant or magnetic particle inspection performed per ASME Code, Section III, Subarticle NB-5200. The corresponding welds in a Class MC vessel only require a fully radiographed inspection per Subarticle NE-5200.

After fabrication of the CNV is completed, a shop hydrostatic test of the vessel is performed to Article NB-6000 requirements. Prior to hydrostatic testing, 100 percent of the pressure boundary welds are inspected. Inspection is performed in accordance with Subarticle NB-5280 and Subarticle IWB-2200 using examination methods of ASME Code, Section V except as modified by ASME Code, Section III, Paragraph NB-5111. The hydrostatic pressure and temperature are held for a minimum of 10 minutes. The pressure is then decreased to design pressure and held for a minimum of four hours and the CNV is inspected for leaks. After the test is completed, pressure boundary welds are inspected again to the same requirements used prior to the test. The ASME Code, Section III, Article NB-6000 hydrostatic test is performed to a greater pressure than required by Article NE-6000. That is, Paragraph NE-6321 specifies a minimum test pressure of only 110 percent and Paragraph NE-6322 specifies a maximum test pressure of 116 percent. The CNV is tested to a pressure 15 percent greater than conventional steel containment structures and 25 percent greater than design pressure in accordance with NB-6221.

RAI 03.06.02-6, RAI 06.02.01.01.A-18S1

The CNV design pressure and temperature of 1,050~~00~~ psia and 550 degrees F bounds design basis events including a LOCA. The design condition pressure exceeds the requirements of ASME Code, Section III, Paragraph NCA-2142.1(a) and NB-3112.1(a) by bounding the most severe Level A service level pressure and the requirements of Paragraph NE-7120(b) by the design not exceeding service limits specified in the design specification.

RAI 03.06.02-6

The design does not have a typical postulated LOCA compared to traditional PWR reactor coolant systems. Reactor coolant in the NuScale design is captured by the CNV and passively recirculated through the RPV and core by the ECCS (see Section 6.3). The reactor coolant level is never below the level of the core and reactor coolant makeup is not required. The reactor coolant piping within the CNV is NPS 2. Secondary-side piping for feedwater and main steam are larger. Breaks in the feedwater and main steam pipes within the CNV are not considered because of leak-before-break design and monitoring. Breaks in these piping systems outside containment are excluded as discussed in Section 3.6.2.1.2. Pipe breaks for reactor coolant piping inside containment and spurious opening of a reactor safety valve or reactor vent valves are addressed in Appendix 3A. Pipe breaks and spurious valve openings inside the CNV are evaluated as DBPBs. The DBPB load is evaluated to Level C service limits and, when combined with SSE loads, is evaluated to Level D service limits. Reactor Coolant System Chemical and Volume Control System (RCS CVCS) line breaks outside of the CNV are evaluated to Level D service limits. Blast effects, pipe whip, and jet impingement caused by a pipe break are discussed in Section 3.6.2.2.1, Section 3.6.2.2.2, and Section 3.6.2.2.3, respectively.

The guidelines of RG 1.57 recommend DBPB loads to be evaluated to Level B service limits and DBPB combined with SSE loads to be evaluated to Level C service limits. Because the CNV is designed, fabricated, inspected, and tested as an NB Class 1 vessel, evaluation of these loads to more restrictive allowable limits is conservative. The increased inspection and testing for a Class 1 vessel discussed below offsets the more restrictive allowable limit guidelines provided in RG 1.57.

The Type B test pressure is the containment peak accident pressure. The leak rate is established by containment leakage rate program.

Pneumatic testing at a pressure not to exceed 25 percent of design pressure may be applied prior to a hydrostatic test, as a means of locating leaks, in accordance with ASME Code, Section III, Paragraph NB-6112.1(b).

RAI 06.02.01.01.A-18S1

Hydrostatic testing of the CNV is done in accordance with the requirements of NB-6000. The CNV is pressurized using water to a minimum pressure of 1,298~~1,250~~ psig and a maximum pressure of 1,375~~1,325~~ psig, the pressure being measured at the bottom of the CNV. The test is performed with the CNV at a minimum temperature of 70 degrees F and a maximum temperature of 140 degrees F. Following a minimum time of 10 minutes at the hydrostatic test pressure, pressure is reduced to design pressure and held for at least four hours before examining for leaks.

If the CNV is hydrostatically tested with the RPV installed, both primary and secondary sides of the RPV are vented to the CNV to preclude a differential pressure external to the RPV greater than considered for design of the RPV.

The hydrostatic test procedure includes measures for sampling the test fluid (water) which contacts the CNV during hydrostatic testing.

Drain water is tested following hydrostatic testing for compliance with the purity requirements. The hydrostatic test procedure includes corrective actions to be taken (e.g. circulating flushes or fill and drains) in the event the exit fluid exceeds purity requirements.

Immediately following hydrostatic testing, the CNV is drained and dried by circulating air until the exit air dew-point temperature is less than 50 degrees F. The circulating air is oil free and does not to contain combustion products from the heating source. The temperature of the dry heated air is controlled to preclude damage to the SGs due to excessive differential temperature.

The shop hydrostatic tests of the CNV are witnessed by an authorized nuclear inspector and a NuScale inspector.

No leakage indications at the examination pressure are acceptable.

3.8.2.8 References

3.8.2-1 U.S. Nuclear Regulatory Commission, "Effect of LWR Coolant Environments on the Fatigue Life of Reactor Materials," NUREG/CR-6909, Draft Report for Comment.

3.8.2-2 U.S. Nuclear Regulatory Commission, "Containment Integrity Research at Sandia National Laboratories - An Overview," NUREG/CR 6906, July 2006.

RAI 03.09.03-1

RAI 03.08.02-1, RAI 03.08.02-2, RAI 03.08.02-7, RAI 03.08.02-9, RAI 03.08.02-10, RAI 03.08.02-11, RAI 03.08.02-12, RAI 06.02.01.01.A-18S1

Table 3.8.2-1: Design and Operating Parameters

Parameter	Value
Upper vessel diameter (uncladded) (approximate)	177 in.
Lower vessel diameter (approximate)	135 in.
Height from support base to crown of CNV top head cover (top auxiliary mechanical access structure not included) (approximate)	76 ft
Bottom of CNV building elevation (reactor pool floor)	25 ft
Top of CNV elevation (approximate)	101 ft
Design internal pressure	1,050~~00~~ psia
Design temperature	CNV: 550 °F Support Skirt: 300 °F
External design pressure	60 psia(2)
Normal operating internal pressure (nominal)	See Note 1
Normal operating external pressure (nominal)	60 psia(2)
Normal operating temperature (nominal)	295 °F
Materials	See Table 6.1-1 and Table 6.1-2.

Notes:

1) Pressure inside the CNV is maintained less than the saturation pressure corresponding to the reactor pool pressure; this results in a vacuum condition less than 0.1 psia.

2) Includes reactor pool water static head pressure for a depth of 100 feet.

RAI 03.11-1, RAI 03.11-4, RAI 03.11-16, RAI 06.02.01.01.A-18S1

Table 3C-7: Design Basis Event Environmental Conditions

Zone[3]	DBE	Temperature (F)	DBE	Pressure (psig)[2]	DBE	Relative Humidity (%)	Water Level (ft. above RXB pool floor)	Water Spray (pipe rupture)
A	HELB	See Figure 3C-1	HELB	971.3~~58.4~~	All Events	100	24 (inside CNV to support ECCS operation)	-
B	HELB	See Figure 3C-1	HELB	971.3~~58.4~~	All Events	100	24 (inside CNV to support ECCS operation)	-
C	HELB	See Figure 3C-2	HELB	971.3~~58.4~~	All Events	100	-	Yes
D	HELB	See Figure 3C-2	HELB	971.3~~58.4~~	All Events	100	-	Yes
E	HELB	See Figure 3C-2	HELB	971.3~~58.4~~	All Events	100	-	Yes
F	HELB	See Figure 3C-2	HELB	971.3~~58.4~~	All Events	100	-	Yes
G	HELB	See Figure 3C-3	HELB	2.5	All Events	100	-	Yes
H	Conditions resulting from HELB and fuel handling accident (FHA) in the pool area/top of module (TOM)	See Figure 3C-4	Conditions resulting from HELB and FHA in the pool area/ TOM	2.75	Conditions resulting from HELB and FHA in the pool area/ TOM	100	-	-

6.2 Containment Systems

6.2.1 Containment Functional Design

The containment is an integral part of the NuScale Power Module (NPM) and provides primary containment for the reactor coolant system (RCS). The NuScale containment system (CNTS) includes the containment vessel (CNV), CNV supports, containment isolation valves (CIVs), passive containment isolation barriers, and containment instruments. (See Figure 6.2-1)

6.2.1.1 Containment Structure

6.2.1.1.1 Design Bases

The CNV is an evacuated pressure vessel fabricated from a combination of low alloy steel and austenitic stainless steel that houses, supports, and protects the reactor pressure vessel (RPV) from external hazards and provides a barrier to the release of fission products. The CNV is maintained partially immersed in a below grade, borated-water filled, stainless steel lined, reinforced concrete pool to facilitate heat removal. The CNV is an American Society of Mechanical Engineers (ASME) Boiler and Pressure Vessel Code (BPVC) Class MC (steel) containment that is designed, analyzed, fabricated, inspected, tested and stamped as an ASME Code Class 1 pressure vessel.

RAI 06.02.01.01.A-18, RAI 06.02.01.01.A-18S1, RAI 06.02.01.01.A-19, RAI 08.01-1

The CNTS, including the CNV, CIVs, and passive isolation barriers (refer to Section 6.2.4), provide a barrier that can accommodate, without exceeding the design leakage rate and with sufficient margin, the calculated pressure and temperature conditions resulting from any LOCA (General Design Criterion (GDC) 50). As a minimum, pressure retaining components that comprise the CNTS have a design pressure of at least 1050~~00~~ psia and 550 degrees F, which bound the calculated pressure and temperature conditions for any design basis event (DBE). In concert with the containment isolation valves (CIVs) and passive containment isolation barriers (discussed in Section 6.2.4), the CNV serves as a final barrier to the release of radioactivity and radiological contaminants to the environment (GDC 16).

The CNV design specifications also take into consideration the pressures and temperatures associated with combustible gas deflagration. The CNV design includes no internal sub-compartments which eliminates the potential for collection of combustible gases and differential pressures resulting from postulated high-energy pipe breaks within containment.

The CNV is designed to withstand the full spectrum of primary and secondary system mass and energy releases (loss-of-coolant accident (LOCA), valve opening events and non-LOCA) while considering the worst case single active failure and loss of power conditions. Calculated peak containment pressures and temperatures are shown by analysis to remain less than the CNV internal design pressure and temperature for analyzed events.

RAI 06.02.01.01.A-18, RAI 06.02.01.01.A-19

~~The limiting primary system pipe break (LOCA) event peak pressure is 921 psia, resulting from a reactor coolant system injection line break. The LOCA peak pressure provides approximately 8 percent margin to the CNV design pressure of 1000 psia. The peak CNV wall temperature for this event is 523 degrees F.~~

RAI 06.02.01.01.A-18, RAI 06.02.01.01.A-19

~~The overall CNV peak pressure is 951 psia resulting from inadvertent opening of an emergency core cooling system valve. The overall peak CNV temperature is 523 degrees F as discussed above. The peak pressure and CNV wall temperature results for secondary system line break events are bounded by the LOCA results. These results demonstrate that the CNV design provides margin to the CNV design pressure of 1000 psia and CNV design temperature of 550 degrees F.~~

RAI 06.02.01.01.A-18, RAI 06.02.01.01.A-18S1, RAI 06.02.01.01.A-19

The overall limiting peak CNV pressure results from an inadvertent reactor recirculation valve opening anticipated operational occurrence with a loss of normal AC and DC power. The overall limiting CNV pressure is 986 psia, which is approximately 6 percent below the CNV design pressure of 1050 psia. The LOCA event peak CNV pressure is 959 psia.

RAI 06.02.01.01.A-18, RAI 06.02.01.01.A-18S1, RAI 06.02.01.01.A-19

The overall peak CNV temperature is 526 degrees F, resulting from a reactor coolant system injection line break. The peak pressure and CNV wall temperature results for secondary system line break events are bounded by the LOCA results. These results demonstrate that the CNV design provides margin to the CNV design pressure of 1050 psia and CNV design temperature of 550 degrees F.

The supporting analyses results are presented in Chapter 5 of the containment response analysis methodology report (Reference 6.2-1). The supporting analyses are discussed by Reference 6.2-1, as well as Section 6.2.1.3 and Section 6.2.1.4.

The CNV is evaluated to demonstrate it can withstand deflagration, incident detonation and deflagration-to-detonation events for 72 hours after event initiation. Structural analysis demonstrates that the CNV is capable of withstanding the resultant combustion loads with margin to stress and strain limits as required by 10 CFR 50.44. Further details are provided in Section 6.2.5.

The structural and pressure retaining components of the CNV consist of the closure flanges and bolting, vessel shells, vessel top and bottom heads, nozzles and penetrations for piping and instrumentation, access and inspection ports, CNV support skirt, CNV support lugs, bolting for the RPV upper support ledge and the NuScale Power Module top support structure mounting assemblies. Section 3.8.2 provides additional design detail that includes a physical description of the geometry of the CNV and supports, plan views, and design criteria relating to construction techniques, static loads, and seismic loads.

- RCS discharge line break (Case 1)
- RCS injection line break (Case 2)
- RPV high point vent degasification supply line break (Case 3)
- inadvertent opening of a RVV (Case 4)
- inadvertent opening of a RRV (Case 5)
- steam line break
- FWLB

The above spectrum of postulated release events bounds the primary and secondary release events for the NPM.

The selection process used to determine initial conditions and boundary condition assumptions, reflecting the unique NuScale design, that are used for evaluation of containment response to postulated primary system mass and energy releases into containment are described in Reference 6.2-1, Section 3.5. Secondary system pipe break analysis initial and boundary condition assumptions and their selection process are described in Reference 6.2-1, Section 3.5. These initial conditions and assumptions are based on the range of normal operating conditions with consideration given to maximizing the calculated peak containment pressure and temperature.

The results of NRELAP5 primary system release event analyses are presented by Reference 6.2-1, Section 5.1. Additionally, Reference 6.2-1, Section 5.1 discusses the insights obtained from the sensitivity studies, used to determine limiting assumptions and single failures, that create a bounding set of assumptions. These assumptions result in the limiting CNV peak temperature and pressure for primary release event Cases 1 though 5. Similarly, Reference 6.2-1, Sections 5.2 and 5.3 present the limiting CNV pressure and temperature results for main steam line and feedwater events, respectively, along with the analysis assumptions that provide these limiting results.

Each mass and energy release event analyzed also includes the consideration of the worst case single active failure as identified by sensitivity cases and a determination of how the availability of normal AC and DC power affects the results, as described in detail by Reference 6.2-1.

RAI 06.02.01.01.A-18, RAI 06.02.01.01.A-18S1, RAI 06.02.01.01.A-19

The limiting LOCA peak calculated containment pressure and temperature, based on the mass and energy release spectrum analyses, is postulated to occur as the result of a double-ended break of the RCS injection line. (Case 2). Considering the results of sensitivity analyses, the analysis assumes a combined simultaneous loss of normal AC power that occurs at event initiation, an inadvertent actuation block (IAB) release pressure of 1000 psid, conservatively biased ECCS actuation setpoint~~s~~, fine CNV axial volume and radial CNV heat structure nodalization, RPV noncondensable release, and the single failure of one RRV to open. The peak calculated pressure is ~~921~~959 psia, providing a margin of ~~79~~91 psia to the CNV

design pressure of 1050~~00~~ psia. The peak calculated temperature is 526~~3~~ degrees F, providing a margin of 24~~7~~ degrees F to the CNV design temperature of 550 degrees F.

RAI 06.02.01.01.A-18, RAI 06.02.01.01.A-18S1, RAI 06.02.01.01.A-19

The overall limiting peak calculated containment pressure, based on the mass and energy release spectrum analyses, is postulated to occur as the result of the spurious opening of a RRV anticipated operational occurrence (Case 5). The analysis models an expansion of the RCS fluid into the CNV volume and includes all relevant energy input from RCS, secondary and fuel stored energy sources, along with conservatively modeled core power and decay heat. Additional assumptions accounting for the results of sensitivity analyses, include the loss of normal AC power and highly reliable DC power system (EDSS) postulated to occur at event initiation and an inadvertent actuation block (IAB) release pressure of 1000 psid, fine CNV axial volume and radial CNV heat structure nodalization, fine reactor pool nodalization, RPV noncondensable release, ~~and~~ minimum primary system flow, and single failure of one RRV to open. ~~The results of single failure sensitivity studies demonstrated no adverse CNV pressure impact for postulated single failures.~~ The peak calculated pressure is 986~~51~~ psia, providing a ~~49~~64 psia margin to the CNV design pressure of 1050~~00~~ psia. Reference 6.2-1, Section 5.4 discusses the analytical and design margin incorporated into the CNV design.

RAI 06.02.01.01.A-18, RAI 06.02.01.01.A-19

The peak calculated containment pressure resulting from a secondary side mass and energy release is postulated as the result of a double-ended ~~FWLB~~steam line break inside containment. The analysis assumes ~~a loss of normal AC power and DC power that occurs simultaneously with a turbine trip,~~fine CNV axial volume and radial CNV heat structure nodalization, fine reactor pool nodalization, an IAB release pressure of 1200 psid, ~~with DHRS available,~~low RCS flow and a failure of the associated FWIV to close. The peak calculated pressure is 449~~2~~ psia.

RAI 06.02.01.01.A-18, RAI 06.02.01.01.A-19

The peak calculated containment temperature resulting from a secondary side mass and energy release is postulated as the result of a double-ended steam line break inside containment. The analysis assumes normal AC and DC power available, ~~with decay heat removal system (DHRS) available,~~ and a failure of the associated feedwater isolation valve (FWIV) to close. The peak calculated temperature is ~~427~~433 degrees F.

The secondary system mass and energy release event results are bounded by the primary system mass and energy release events.

The CNV external design pressure is 60 psia which is based on an internal pressure of 0 psia and an external pressure resulting from 100 feet of pool water static pressure.

The environmental qualification of mechanical and electrical equipment exposed to the containment environment following a primary or secondary system mass and energy release inside containment is discussed in Section 3.11.

prevent core uncovery or loss of core cooling. In this passive coolant system arrangement, CNV internal pressure is irrelevant to ECCS performance.

6.2.1.6 Testing and Inspection

The Inservice Inspection and Inservice Testing Program identifies the required inspections, tests, frequencies, and acceptance criteria for the applicable components and systems.

Section 3.8.2.7 addresses the testing and ISI requirements with respect to compliance with the ASME BPVC for fabrication and preservice examinations used to inspect and test the steel CNV and the other components relied on for containment integrity. Additional information is provided in Section 14.2 describing the test programs that control initial plant testing (pre-operational and startup) conducted on the CNV and associated structures, systems, and components.

As described in Section 3.8.2.7, fabrication and preservice testing and inspection of the NuScale CNV meets ASME Code Section III and Section XI requirements for a steel CNV. The preservice testing and inspection of the NuScale CNV pressure retaining and integrally attached materials is performed in accordance with written non-destructive examination procedures as required by the ASME BPVC. The examinations, using the methods of ASME BPVC Section V except as modified by Section NB or NF, meets the applicable requirements of ASME NB-5000 and NF-5000.

During fabrication, magnetic particle or liquid penetrant examination of surfaces that are clad is performed in accordance with NB-2545 or NB-2546 prior to application of the cladding.

Preservice examinations of ASME Code Class 1 containment pressure boundary items are conducted in accordance with NB-5280 and IWB-2200 using the examination methods of ASME BPVC Section V except as modified by NB-5111. Preservice inspections include 100 percent of the pressure boundary welds.

RAI 06.02.01.01.A-18S1

The CNV is hydrostatically tested in accordance with ASME BPVC Section III, Subsection NB-6000 at a minimum test pressure (highest point) of 1,298~~1250~~ psig and maximum test pressure (lowest point) of 1,375~~1325~~ psig. Piping installed inside the CNV during hydrostatic testing is vented to the CNV to preclude a net external pressure on the piping during the test.

RAI 03.08.02-1, RAI 03.08.02-2, RAI 03.08.02-7, RAI 03.08.02-9, RAI 03.08.02-10, RAI 03.08.02-11, RAI 03.08.02-12, RAI 06.02.02-2

Based on the high pressure and the safety functions of a NuScale CNV, enhanced inspection requirements are provided for the CNV in excess of the Class MC requirements of ASME BPVC, Section XI, Subsection IWE. The CNV augmented inspections are based on Class 1 requirements of ASME BPVC, Section XI. Specifically, rather than just a visual examination as required for an ASME Class MC containment, the NuScale CNV pressure boundary welds are required to have a volumetric or surface examination performed per ASME BPVC, Section XI, Article IWB-2000.

RAI 06.02.01.01.A-18S1

Table 6.2-1: Containment Design and Operating Parameters

Containment Parameter	Value
Design Conditions	
• Internal Design Pressure	1050~~00~~ psia*
• External Design Pressure	60 psia
• Design Temperature	550 °F
• Design Maximum Containment Leakage	17.5 SCFH
• UHS Pool Water (Avg) Temperature	212 °F (boiling)
• Reactor Building Air Temperature (°F)**	65 °F - 85 °F
Normal Operating Conditions (nominal)	
• Internal CNV Pressure	less than 0.1 psia
• External CNV Pressure	60 psia
• CNV Temperature (Atmosphere)	100 °F
• UHS Pool Water Level (See Figure 9.1.3-5)	68 - 69 ft (pool level) 93 - 94 ft (building elevation)
• UHS Pool Water Volume - from normal operating level (69 ft) to top of weir (45 ft) as shown in Figure 9.1.3-5	4 million gallons
• UHS Pool Water (Avg) Temperature	100 °F
• Reactor Building Air Temperature (°F)	75 ±10 °F
• Lowest Service Temperature	40°F

* Hydrostatically tested at 1298~~1250~~ psig (at highest point of test boundary)/70°F (minimum) to 140°F (maximum)
** Additional Reactor Building design temperature information is provided in Section 9.4

RAI 03.08.02-1, RAI 03.08.02-2, RAI 03.08.02-7, RAI 03.08.02-9, RAI 03.08.02-10, RAI 03.08.02-11, RAI 03.08.02-12, RAI 06.02.01.01.A-18S1

Figure 6.2-2a: Containment Vessel Assembly

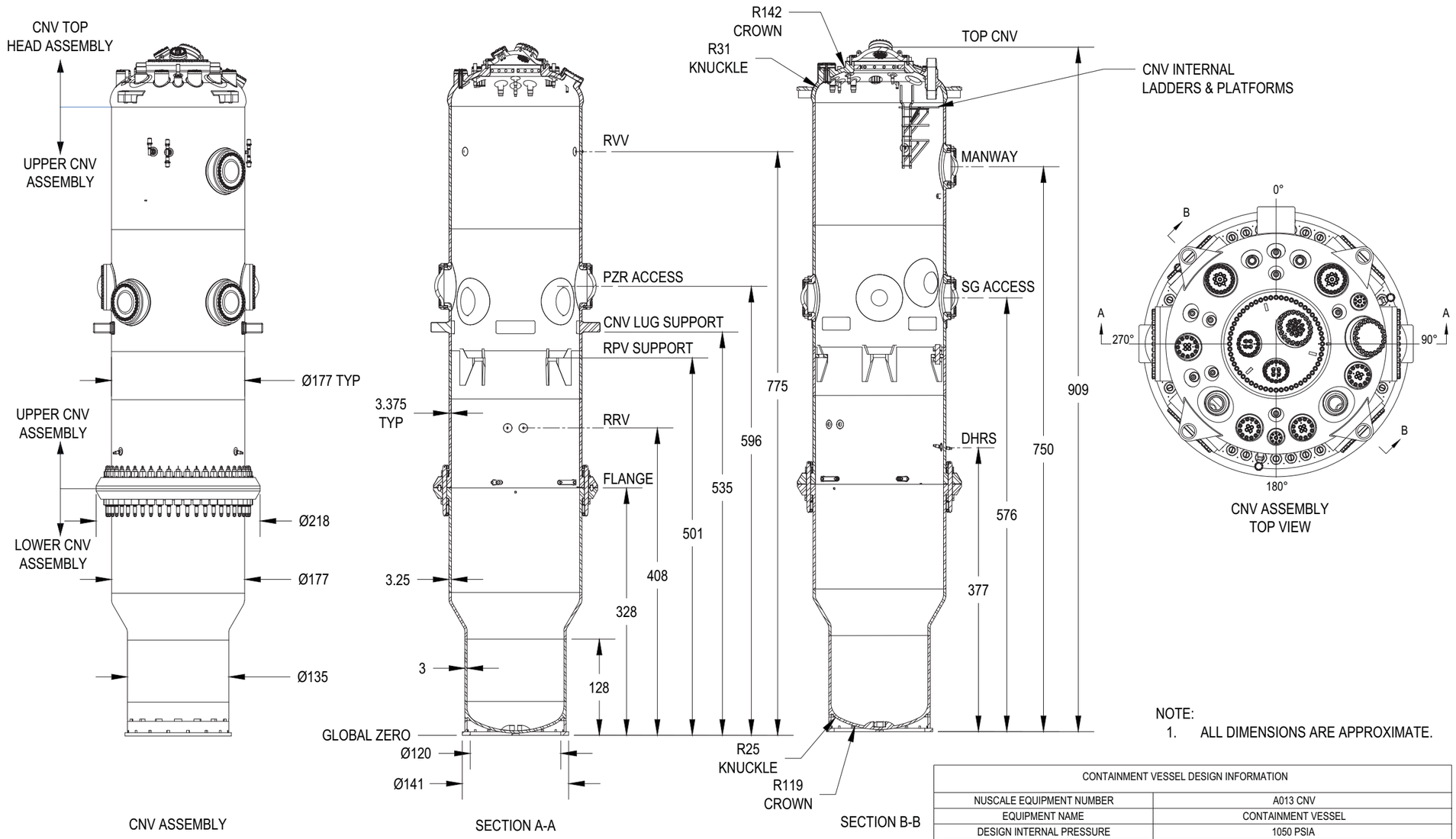

NOTE:
1. ALL DIMENSIONS ARE APPROXIMATE.

CONTAINMENT VESSEL DESIGN INFORMATION	
NUSCALE EQUIPMENT NUMBER	A013 CNV
EQUIPMENT NAME	CONTAINMENT VESSEL
DESIGN INTERNAL PRESSURE	1050 PSIA
DESIGN TEMPERATURE	550˚F
DESIGN EXTERNAL PRESSURE	EXTERNAL POOL WATER WITH < 1 PSIA INTERNAL PRESSURE
SHOP HYDROSTATIC PRESSURE/TEMPERATURE	1298 PSIG/70˚F - 140°F

6.3.2.4 Material Specifications and Compatibility

RAI 06.02.01.01.A-18S1

The external operating environment for ECCS components varies based on the operating conditions. During normal operation, the main valves operate in a high temperature, evacuated environment. During shutdown, the RRVs and hydraulic actuator lines are submerged in borated water. Under accident conditions, the ECCS valve exterior and hydraulic lines may be subjected to pressures up to 1050~~00~~ psia.

The operating environment for the pilot valve actuator assemblies remains fairly constant with the assemblies submerged in the reactor pool. The pool temperatures range from 90 to 120 degrees F during normal operation, but can be as high as the post-accident saturation temperature for accident pressure.

The ECCS valves are of a robust physical design constructed from corrosion-resistant materials that have a proven history in light water reactor environments. All wetted portions of the ECCS valves, submerged lines, and actuators are constructed of stainless steel material resistant to boric acid corrosion. All surfaces of the ECCS valves in contact with reactor coolant or reactor pool water during refueling are constructed of corrosion-resistant materials and have been shown to not exhibit unacceptable degradation in service based on exposure to operating chemistry.

The valves are qualified to retain the ability to perform their safety function under all postulated events for the CNV and RPV. Additional information describing the ECCS main valve, piping, and actuator valve materials of construction is provided in Table 6.1-1.

RAI 06.02.01.01.A-18S1

The ECCS valves and hydraulic lines are designed for an internal pressure and temperature of 2100 psia and 650 degrees F, respectively, and an external pressure of 105~~0~~0 psia. Overpressurization of the components is protected by the reactor safety valves.

The ECCS actuator assemblies are designed for submergence and external pressure and temperature of 50 psia and 32 to 250 degrees F, respectively. The actuator assemblies are designed for an internal pressure and temperature of 2100 psia and 650 degrees F, respectively.

The RRVs and actuators are designed for a minimum neutron exposure of 2.5E17 neutrons/cm^2. Neutron exposure of the RVVs is negligible due to their distance from the core beltline region.

During reactor shutdown and post-LOCA events, the surfaces of ECCS components in the CNV are exposed to borated water. Eliminating or minimizing chloride levels and maintaining low levels of oxygen in the water reduces the potential for stress corrosion-cracking. The post-LOCA coolant is reactor coolant that satisfies RCS chemistry criteria. Water chemistry during shutdown conditions is controlled to preclude stress corrosion-cracking initiation using water treatment methods that are

RAI 06.02.01.01.A-18S1, RAI 06.03-4

Table 6.3-2: Emergency Core Cooling System Valve and Actuator Design and Operating Parameters

Service Condition	Parameter	RRV	RVV	Valve Actuators
Design conditions	Internal design pressure	2100 psia	2100 psia	2100 psia
	External design pressure	1050~~00~~ psia	1050~~00~~ psia	50 psia
	Design temperature	650°F	650°F	650°F
Normal operating conditions	Internal pressure	1850 psia	1850 psia	1850 psia
	External pressure	<1 psia	<1 psia	45 psia
	Fluid temperature	500°F	590°F	40 to 160°F
	Valve external temperature	470°F	525°F	100°F
Hydrostatic testing	External pressure	1298~~1250~~ psig	1298~~1250~~ psig	N/A
	Internal pressure	2782 psig	2625 psig	N/A
	CNV test temperature	70 to 140°F	70 to 140°F	N/A
Accident conditions	External pressure	<1050~~00~~ psia	<1050~~00~~ psia	<50 psia
	Design temperature	<650°F	<650°F	<650°F
	Internal pressure	<2100 psia	<2100 psia	<2100 psia

separated by a wall with a gate. When the gate between the dry dock and the RFP is open, the dry dock and UHS pools share one large volume of water.

The active pool support systems, including cooling and pool water cleanup, are nonsafety-related systems and are described in the following sections.

The RXB heating and ventilation system is described in Section 9.4.2. The fixed area radiation monitoring system provides monitors in the SFP area as described in Section 12.3.4.

9.1.3.2.1 Spent Fuel Pool Cooling System

The SFPCS performs the following nonsafety-related functions:

1) maintains the water temperature of the SFP during normal operations by removing the decay heat from SFAs

2) serves as a backup to RPCS

3) maintains the water level of the UHS during normal operations to account for evaporation of pool water by providing makeup from the demineralized water system (DWS)

4) provides a flow path for addition of borated water from the boron addition system (BAS), and for removal of boron from pool water by the liquid radioactive waste system (LRWS)

The SFPCS is shown in Figure 9.1.3-1 and consists of two trains, each with an inlet strainer, a pump, and a heat exchanger. The system has intake skimmers, suction and discharge piping, valves, fittings, orifices, and instruments. Each major component train has manual isolation valves. Table 9.1.3-1a provides design information for the major components. Section 9.1.3.3.4 provides the heat loads in the SFP and the cooling capacity of the SFPCS. Section 3.2 provides the safety and seismic classifications for the system and identifies the applicable quality assurance (QA) requirements.

During normal plant operation with stored SFAs, the SFPCS operates continuously with either one or two trains. The train not in operation is kept in stand-by and started when needed. To support post-accident operations, the SFPCS has the ability to restart when AC power becomes available and operate with a pool water temperature near boiling. The SFPCS heat exchangers are cooled with water from the site cooling water system (SCWS).

Section 9.1.3.3.4 describes the heat loads from the SFAs in the SFP and from the NPMs in the reactor pool. The SFPCS and RPCS operate to cool these heat loads, and because the SFP and the RFP are connected via an open channel, the SFPCS operates in conjunction with the RPCS to remove the combined heat loads from the UHS. The SFPCS pumps provide the motive force to send pool water to the PCUS from the SFPCS as needed for pool water cleanup.

RAI 06.02.01.01.A-18S1

The elevation of the bottom of each SFPCS piping penetration through a SFP or RFP wall, and the open ends of the suction and discharge piping in the SFP and RFP, are above the 55 ft pool water level. Note: the Technical Specification 3.5.3 LCO Condition B minimum 65 foot pool level is only credited for establishment of the initial CNV wall temperature assumption in the containment response analysis and is not credited for containment heat removal purposes.

The SFPCS suction and discharge lines in the SFP are on opposite corners of the SFP to ensure cooling flow and mixing across the SFP. The SFPCS can also take suction from the north side of the RFP and can discharge water to the south side of the RFP. In the event that two trains of the RPCS are not operational, the flow through the SFPCS can be aligned to support cooling of either the reactor pool or the RFP, or both. Cooling of the reactor pool uses the PCUS connections to the RPCS discharge lines to send flow to the reactor pool from the SFPCS.

The DWS provides normal makeup water to the SFPCS. As described in Section 9.2.3, the DWS pumps have a flow capacity that ensures at least 100 gpm can be provided for SFP makeup. The makeup is added to the SFP and flows to the UHS through the open channel between the SFP and RFP. The UHS system provides the pool water level instruments located in the SFP and RFP as described in Section 9.2.5. A low water level indication on the level transmitters for the UHS alerts operators to open the normally closed valve in the DWS make-up line. The LRWS can also provide pool water makeup supply to the UHS pools from the low conductivity sample tank.

RAI 06.02.01.01.A-18S1

As described in Section 9.2.5, the UHS system provides an emergency makeup line for supply of water to the SFP. The elevation of the bottom of the UHS makeup line pipe penetration, and the open end of the discharge pipe in the SFP, are above the 55 ft pool water level. Note: the Technical Specification 3.5.3 LCO Condition B minimum 65 foot pool level is only credited for establishment of the initial CNV wall temperature assumption in the containment response analysis and is not credited for containment heat removal purposes.

The BAS provides a source of borated water for increasing the boron concentration in the UHS pools. The SFPCS provides pool water to the LRWS low conductivity collection tanks for processing if a reduction in boron concentration is needed in the UHS pools.

9.1.3.2.2 Reactor Pool Cooling System

The RPCS performs the following nonsafety-related functions:

1) maintains the water temperature of the reactor pool and RFP during normal operations by removing heat from the operating NPMs and from a disassembled NPM during refueling

2) serves as a backup to SFPCS

3) provides pump priming water for the containment flooding and drain system (CFDS) and receives drain water from the CFDS

4) provides reactor pool temperature information signals for post-accident monitoring

The RPCS is shown in Figure 9.1.3-2a and Figure 9.1.3-2b, and consists of two suction headers, each with a strainer, that supply three cooling trains, each with a pump and a heat exchanger. The system has intake skimmers, suction and discharge piping, valves, fittings, orifices, and instruments. Each major component train has manual isolation valves. Table 9.1.3-1b provides design information for the major components. Section 9.1.3.3.4 provides the heat loads in the reactor pool and RFP, and the cooling capacity of the RPCS. Section 3.2 provides the safety and seismic classifications for the system and identifies the applicable QA requirements.

During normal plant operation with up to 12 NPMs producing power, the RPCS operates continuously with two trains. The third train not in operation is kept in stand-by and started if needed. To support post-accident operations, the RPCS has the ability to restart when AC power becomes available and operate with a pool water temperature near boiling. The RPCS heat exchangers are cooled with water from the SCWS.

The heat loads from the NPMs in the reactor pool and RFP are cooled by the RPCS. Because the RFP and the SFP are connected via an open channel, the RPCS operates in conjunction with the SFPCS to remove the combined heat loads from the UHS. The RPCS pumps provide the motive force to send pool water to the PCUS from the RPCS as needed for pool water cleanup.

The RPCS intakes are in the north and south walls of the RFP, and there is a discharge into each of the NPM bays in the reactor pool. The water cools each NPM and mixes as it flows through the reactor pool to the RFP. The RPCS can also take suction from the west side of the SFP and can discharge water to the south side of the SFP. In the event that a train of the SFPCS is not operational, flow through the RPCS can be aligned to support cooling of the SFP.

RAI 06.02.01.01.A-18S1

The elevation of the bottom of each RPCS piping penetration through a wall of the refueling pool, reactor pool, or spent fuel pool, and the open ends of the suction and discharge piping in the pools, are above the 55 ft pool water level. Note: the Technical Specification 3.5.3 LCO Condition B minimum 65 foot pool level is only credited for establishment of the initial CNV wall temperature assumption in the containment response analysis and is not credited for containment heat removal purposes.

The RPCS provides borated pool water for priming the pumps in the CFDS prior to use of the pumps during NPM cooldown in preparation for refueling operations. The RPCS provides a flow path from CFDS to the UHS pools for returning water drained from a containment vessel after a refueling.

surge control storage tank is emptied by gravity to the dry dock. A pipe connecting the dry dock and SFP contains two equalization valves that can be opened at the end of dry dock filling to equalize the water level in the dry dock and UHS pools. Once the water level in the dry dock equalizes with the level in the UHS pools, the dry dock gate can be reopened to allow removal of the upper section of the NPM.

RAI 06.02.01.01.A-18S1

The elevation of the bottom of each PSCS piping penetration through a wall of the dry dock, RFP, or SFP; and the open ends of equalization line, are above the 55 ft pool water level. The piping deeper in the dry dock and RFP is equipped with anti-siphoning devices. These devices are also above the 55 ft pool water level. Note: the Technical Specification 3.5.3 LCO Condition B minimum 65 foot pool level is only credited for establishment of the initial CNV wall temperature assumption in the containment response analysis and is not credited for containment heat removal purposes.

The vent line on the pool surge control storage tank has a continuous air monitor with grab sample capabilities to monitor effluent releases from the tank. The radiation monitoring and sampling equipment for the tank vent are described in Section 11.5.2.

The supply and discharge lines to and from the pool surge control storage tank are embedded underground or in a yard area pipe chase. Each line is within a guard pipe from the catch basin to the RXB. The sump drain line is also embedded underground or in a yard area pipe chase and within a guard pipe from the catch basin to the RWB. Each guard pipe provides collection and permits periodic surveillance for PSCS piping leaks.

The PSCS storage tank is equipped with a water level instrument that provides overflow protection. In addition to initiating an alarm locally and in the main control room, the instrumentation provides an automatic isolation of the water transfer line to the tank when the water level reaches the high level setpoint.

9.1.3.2.5 Pool Leakage Detection System

The PLDS performs the following nonsafety-related functions:

1) provides for collection of water leaking from the pool liner

2) directs the flow to sumps for detection of collected leakage for operator evaluation

RAI 12.03-43, RAI 12.03-43S1

The PLDS consists of floor and wall leakage channels, perimeter leakage channels, channel drainage lines, leak collection headers, leakage rate measuring lines, and valves. The valves are used to isolate each channel drainage line and leakage rate measuring line. System components with the potential for contact with borated water are stainless steel. The floor leakage channels are embedded in the concrete beneath field welded seams of the pool floor liner plates in the UHS pools and dry

As described in Section 9.4.2, the area around the SFP is serviced by the nonsafety-related RXB heating and ventilation system that controls the release of airborne radionuclides from evaporating UHS pool water for normal conditions of operation, but is not credited for accident conditions.

9.1.3.3.4 Residual Heat Removal Capability

RAI 06.02.01.01.A-18S1

The pool cooling systems meet Position C.9 of Regulatory Guide 1.13 and maintain the pool bulk temperatures below 11~~4~~0°F for design heat loads as described below. For these analyses, the following assumptions apply. The decay heat from the SFAs is cooled by the heat exchangers with no loss of heat to the pool walls, pool floors, or fuel storage racks; or by evaporation of pool water.

The SFP is in communication with the RFP and reactor pool to form the UHS. The heat loads in the three UHS pools are considered to ensure adequate active cooling capability. The heat exchangers in the RPCS and SFPCS are sized assuming the maximum water temperature for the SCWS and the design flowrates from Table 9.1.3-1a and Table 9.1.3-1b. The RPCS and SFPCS heat exchangers each have the same heat removal capacity, with two two exchangers in the SFPCS and three heat exchangers in the RFPCS. The five heat exchangers in the combined RPCS and SFPCS are cross-connected with piping and valves to provide sufficient redundancy to ensure adequate cooling while allowing for normal equipment maintenance. A heat exchanger in either system can withdraw water from either the SFP or the RFP, and can discharge cooled water to the spent fuel pool, refueling pool, or reactor pool. As heat loads change in the pools, the heat exchangers are operated to maintain the bulk pool temperatures at the normal operating temperature of approximately 100°F.

The RPCS heat exchangers are sized so that with two of the three RPCS heat exchangers in operation the RPCS can remove the normal operating heat load of approximately 10.36 MMBtu/hr from 12 NPMs at full power operation in the reactor pool. As noted above, each of the five heat exchangers in the two systems is sized for half of this heat load.

For the cases below, the heat load in the reactor pool is added to the heat load from the SFAs in the SFP, and the heat load when an NPM is opened in the RFP, to ensure that the cooling capabilities for the combined SFPCS and RPCS are adequate. Several cases for the total heat load in the UHS pools are described below.

The first case is the normal operating heat load for 12 operating NPMs in the reactor pool and a full SFP. The decay heat for a full SFP is based on continuous operation of the plant with a refueling every two months. With 13 SFAs offloaded every refueling, more than 10 years are needed to fill the accessible storage locations in the fuel storage racks. The spent fuel decay heat is determined using American Nuclear Society Standard 5.1-2014 (Reference 9.1.3-1). For this case, the heat load in the UHS totals approximately 12.85 MMBtu/hr and three of the five

heat exchangers operate to maintain the normal operating temperature in the pools.

The next case adds the incremental heat load from the opening of an NPM for refueling, which is equivalent to a full-core offload into the SFP from one NPM. With 11 NPMs remaining in operation, the heat load for the UHS pools totals approximately 16.56 MMBtu/hr. For this case, there is a reduction in operating NPM heat load from 12 down to 11 NPMs, but the decrease is more than offset by the increase from the open NPM in the RFP, or from a full-core offloaded into the SFP. This case assumes an additional heat load when an NPM is opened in the RFP 8 hours after a shutdown and is conservative for the time to disconnect, move, and open an NPM, and to then offload a full core into the SFP. For this case, four of the five heat exchangers can be operated to maintain the normal operating pool temperature.

The next case is not expected to occur during operations, but is used to ensure the design provides adequate heat removal capability. For a maximum design heat load of 0.3 percent of the total plant thermal output, which is 19.65 MMBtu/hr, four of the five heat exchangers are needed to maintain the normal operating pool temperature.

RAI 06.02.01.01.A-18S1

The final case is another that is not expected to occur during operations. The following applies if the SFPCS and RPCS are needed for cooling the SFAs stored from five or more years of operation plus a full-core offload from each of the 12 NPMs. Under this scenario, the total decay heat in the UHS for each of the NPM offloads must be evaluated before the additional core is offloaded to ensure that the bulk pool water temperature is maintained at less than the 1140°F limit established by Technical Specifications.

RAI 06.02.01.01.A-18S1

As described in Section 9.1.2.3.2, when cooling of just the SFP is considered, a single heat exchanger in the SFPCS can keep a full SFP with a recent core offload from one NPM below the maximum pool water temperature limit of 1140°F in the Technical Specifications. This demonstrates that the SFPCS has a minimum heat removal capability for maintaining the SFP temperature within the design for the structure.

9.1.3.3.5 Prevent Coolant Inventory Reduction for Accident Conditions

The requirements of GDC 61 to prevent loss of SFP coolant for accident conditions were considered in the design of the structures and systems supporting spent fuel cooling and shielding. The design provides the makeup water and prevents draining, siphoning, or other loss of water.

The safety function of providing makeup for spent fuel cooling and shielding is preformed passively for accident conditions, for the long-term safety period, and for a longer time period based on the design of the UHS pools in the RXB. As shown in Figure 9.1.3-5, the top of the weir wall between the SFP and RFP is at the 20 ft

pool water depth. The tops of the fuel storage racks are below the 10 ft pool water depth. The water in the SFP below the top of the weir is the inventory of water that provides 10 ft of water above the tops of the fuel storage racks for cooling the SFAs. This minimum depth of water also provides shielding for operators to keep dose rates low while they are working around the SFP.

RAI 09.01.03-2

Preventing a reduction of the SFP coolant inventory below the top of the weir wall for accident conditions is performed by the large inventory of water in the UHS pools and by an emergency makeup line in the UHS system as described in Section 9.2.5. The water inventory above the top of the weir wall is contained within Seismic Category I structures. The UHS makeup line also meets Seismic Category I design requirements. The Seismic Category I flow path for supply of makeup water to the lower portion of the SFP, coupled with the design of the UHS, meet Position C.8 of Regulatory Guide 1.13.

RAI 09.01.03-2

The capacity of each flow path exceeds the 100 gpm needed to supply makeup water to account for the maximum evaporation rate or the liner leakage rate from a dropped fuel assembly. The large inventory of water in the UHS above the top of the weir wall provides a supply of more than 4 million gallons of water. This automatically feeds into the lower portion of the SFP without the need for operator action to initiate the flow because the open channel above the top of the weir allows unrestricted flow between pools and there is no gate in the wall that could block flow. As described in Section 9.2.5, the large quantity of water in the UHS provides a supply of water that would take weeks to evaporate to the level of the top of the weir. This allows time for operators to connect a water supply to the emergency makeup line outside of the RXB. As shown in Figure 9.2.5-2, the emergency makeup line in the UHS system has a 6 inch diameter and slopes from outside of the RXB to the SFP. This line has the capability of providing several times the needed 100 gpm and permits operators to make the connections and flow alignments from a location remote from the operating floor near the SFP.

In addition to the capability to add makeup, the design prevents the loss of pool water inventory. The large inventory of water in the UHS increases the time needed for leaking, draining, or siphoning to impact the water level in the pools. Each foot of water depth in the UHS pools contains more than 90,000 gallons of water. At a leakage rate of 100 gpm, more than 900 minutes, or 15 hours, is needed for a one-foot drop in water level. The large amount of water to be lost and the time needed ensures that operators would be alerted to stop the loss of water. Sufficient time is available to preclude a loss of pool water that would create an unsafe water level in the UHS pools.

RAI 06.02.01.01.A-18S1

The design of the UHS pools meets Position C.6(b) of Regulatory Guide 1.13 and has no drains, piping, or other systems that would allow pool water to drain below the minimum level needed to support plant safety analyses, which is above the level needed for adequate shielding of the SFAs. The elevation of the bottom of each of the piping penetrations through the walls of the UHS pools and the dry dock is

above the 55 ft pool water level. Also, the elevations of the open ends of the piping in the pools or the antisiphon devices on the piping are above this elevation. As shown in Figure 9.1.3-5, this elevation ensures that sufficient pool water inventory is available to support the plant safety analyses. A failure of the piping in these pool support systems does not drain the water to adversely affect the inventory of water available for cooling and shielding the NPMs or SFAs. The CFDS has an intake pipe with an open end above the 55 ft pool water level. The CFDS pipe exits the pool water surface and does not penetrate the wall of a UHS pool. There are no other penetrations in the UHS pools or dry dock. Note: the Technical Specification 3.5.3 LCO Condition B minimum 65 foot pool level is only credited for establishment of the initial CNV wall temperature assumption in the containment response analysis and is not credited for containment heat removal purposes.

Identifying leakage from components in the pool support systems prevents a loss of pool inventory and is another means to ensure an adequate water level in the SFP for cooling and shielding the stored spent fuel. Leakage from piping or components in the spent fuel pool cooling system, reactor pool cooling system, pool cleanup system, and pool surge control system in the RXB is collected by local floor drains, which flow to sumps monitored by level instrumentation. An increase in sump level and subsequent alarm indicates an abnormal amount of water in the sump and possible system leakage. Each major component train in these systems has manual valves that allow isolation of the train for maintenance or repair.

Leakage from the UHS pool liner removes inventory from the SFP. The PLDS collects leakage from the liners and directs it to the floor sumps in the RWDS. The RWDS supports the leakage detection function of the PLDS by providing local and control room indication and associated alarms. When the leakage rate into a sump reaches a predetermined value, operators perform inspections to determine the cause and implement repairs as necessary to stop the leakage from the liner.

Pool water in the dry dock is not included in the inventory of water in the UHS because the dry dock gate may be closed at the time of an accident. The dry dock gate is classified as Seismic Category II, which does not ensure that the gate functions and can reopen after a safe shutdown earthquake. An empty dry dock at the time of an accident and a safe shutdown earthquake is assumed to cause the gate to fail and open. For this condition, water in the UHS pools reenters the dry dock and lowers the water level in the UHS pools by less than 12 ft. Because the UHS pool water level remains above the minimum pool level for accident mitigation and for cooling and shielding the SFAs after such a gate failure, the water level in the SFP and other two UHS pools provides a sufficient inventory of water for performing the cooling and shielding functions.

9.1.3.3.6 Monitoring Cooling Capability and Area Radiation Levels

The GDC 63 was considered in the design of the spent fuel cooling related structures and systems. Monitoring for the loss of decay heat removal capability is provided for both normal and accident conditions. Radiation monitors are provided for detecting excessive radiation levels in the SFP area of the RXB as described in Section 12.3.4. These design features meet Position C.7 of Regulatory Guide 1.13.

RAI 06.02.01.01.A-18S1

Figure 9.1.3-5: Reactor Building Pool Water Level and Plant Feature Elevations

{{ Withheld - See Part 9 }}

RAI 06.02.01.01.A-18S1, RAI 09.02.05-2, RAI 20.01-6, RAI 20.01-7

Table 9.2.5-1: Relevant Ultimate Heat Sink Parameters

UHS Parameter		
Level	**Building Elevation (ft)**	**Pool Level (ft)**
Normal operating level range	{{ Withheld - See Part 9 }}	68-69
Minimum level assumed for reactor building crane operation[1]	{{ Withheld - See Part 9 }}	66
Minimum level for 30 day coverage for DHRS[2]	{{ Withheld - See Part 9 }}	63.4
Minimium level for SFPCS and RPCS suction penetrations[3]	{{ Withheld - See Part 9 }}	60
Minimum level for long term cooling[6]	{{ Withheld - See Part 9 }}	55
Minimum level for FHA scrub[4]	{{ Withheld - See Part 9 }}	52
Spent fuel pool weir wall	{{ Withheld - See Part 9 }}	20
Minimum level to support radiation shielding[5]	{{ Withheld - See Part 9 }}	20
Top of spent fuel rack	{{ Withheld - See Part 9 }}	10
Reactor pool and spent fuel pool floor	{{ Withheld - See Part 9 }}	0
Temperature	**Temperature (°F)**	
Minimum operating	40	
Normal operating	100	
Maximum operating	110~~140~~	

Notes:

[1] Maximum Reactor Building crane lifting capacity is calculated assuming a pool level of 66 ft and a pool temperature of 140 degrees F for calculating water density.

[2] ANSI/ANS 5.1-2014 is used to calculate decay heat for up to 12 NPMs and stored spent fuel assemblies with a pool water starting temperature of 140 degrees F.

[3] Penetration height for SFPCS and RPCS suction piping in the SFP and RFP level assures suction capability for coolant pumps.

[4] Level for iodine scrubbing includes: weir height + 8 ft damaged fuel + 1 ft weir clearance + 23 ft scrub

[5] ANSI/ANS 57.2-1983 maximum radiation dose of 2.5 mrem/hr

[6] The operational analytical limit for UHS minimum depth for heat removal is 55 ft. The Technical Specification minimum UHS level of 65 ft only credited for establishment of the initial CNV wall temperature assumption in the containment response analysis and is not credited for containment heat removal purposes.

RAI 06.02.01.01.A-18S1, RAI 15.00.02-20, RAI 15.01.01-2, RAI 15.04.01-4, RAI 15.04.01-6S1

Table 15.0-7: Analytical Limits and Time Delays

Signal	Analytical Limit	Basis and Event Type	Actuation Delay
High Power	120%(5) rated thermal power (RTP) (≥ 15% RTP) 25% RTP (<15% RTP)	This signal is designed to protect against exceeding critical heat flux (CHF) limits for reactivity and overcooling events.	2.0 sec
Source and Intermediate Range Log Power Rate	3 decades/min~~(6)~~	This signal is designed to protect against exceeding CHF and energy deposition limits during startup power excursions	Variable
High Power Rate	±15% RTP/min	This signal is designed to protect against exceeding CHF limits for reactivity and overcooling events.	2.0 sec
High Startup Range Count Rate	5.0 E+05 counts per second(6)	This signal is designed to protect against exceeding CHF and energy deposition limits during rapid startup power excursions.	3.0 sec
High Subcritical Multiplication	3.2	This signal is designed to detect and mitigate inadvertent subcritical boron dilutions in operating modes 2 and 3.	150.0 sec
High Reactor Coolant System (RCS) Hot Temperature	610°F	This signal is designed to protect against exceeding CHF limits for reactivity and heatup events.	8.0 sec
High Containment Pressure	9.5 psia	This signal is designed to detect and mitigate RCS or secondary leaks above the allowable limits to protect RCS inventory and emergency core cooling system (ECCS) function during these events.	2.0 sec
High Pressurizer Pressure	2000 psia	This signal is designed to protect against exceeding reactor pressure vessel (RPV) pressure limits for reactivity and heatup events.	2.0 sec
High Pressurizer Level	80%	This signal is designed to detect and mitigate chemical and volume control system (CVCS) malfunctions to protect against overfilling the pressurizer.	3.0 sec
Low Pressurizer Pressure	1720 psia(1)	This signal is designed to detect and mitigate primary high energy line break (HELB) outside containment and protect RCS subcooled margin for protection against instability events.	2.0 sec
Low Low Pressurizer Pressure	1600 psia(2)	This signal is designed to detect and mitigate primary HELB outside containment and protect RCS subcooled margin for protection against instability events.	2.0 sec
Low Pressurizer Level	35%	This signal is designed to protect the pressurizer heaters from uncovering and overheating during decrease in RCS inventory events.	3.0 sec
Low Low Pressurizer Level	20%	This signal is designed to detect and mitigate loss-of-coolant accidents (LOCAs) to protect RCS inventory and ECCS functionality during LOCA and primary HELB outside containment events.	3.0 sec
Low Low Main Steam Pressure	100 psia (at ≤15% RTP)	This signal is designed to detect and mitigate secondary HELB outside containment to protect steam generator inventory and decay heat removal system (DHRS) functionality.	2.0 sec
Low Main Steam Pressure	300 psia (at >15% RTP)	This signal is designed to detect and mitigate secondary HELB outside containment to protect steam generator inventory and DHRS functionality.	2.0 sec

Table 15.0-7: Analytical Limits and Time Delays (Continued)

Signal	Analytical Limit	Basis and Event Type	Actuation Delay
High Main Steam Pressure	800 psia	This signal is designed to detect and mitigate loss of main steam demand to protect primary and secondary pressure limits during heatup events.	2.0 sec
High Main Steam Superheat	150°F	This signal is designed to detect and mitigate steam generator boil off to protect DHRS functionality during at power and post trip conditions.	8.0 sec
Low Main Steam Superheat	0.0°F	This signal is designed to detect and mitigate steam generator overfilling to protect DHRS functionality during at power and post trip conditions.	8.0 sec
Low RCS Flow	1.7 ft^3/s	This signal is designed to ensure boron dilution cannot be performed at low RCS flowrates where the loop time is too long to be able to detect the reactivity change in the core within sufficient time to mitigate the event.	6.0 sec
Low Low RCS Flow	0.0 ft^3/s	This signal is designed to ensure flow remains measureable and positive during low power startup conditions.	6.0 sec
~~Low RPV Riser Level Range~~	~~390-350"(3) (elevation)~~	~~This signal is designed to protect water level above the core in LOCA events.~~	~~3.0 sec~~
High CNV Water Level	~~260~~300-264~~220~~"(3) (elevation)	This signal is designed to protect water level above the core in LOCA events.	3.0 sec
Low AC voltage	Note 4	This signal is designed to ensure appropriate load shedding occurs to EDSS in the event of extended loss of normal AC power to the EDSS battery chargers.	60.0 sec
High Under-the-Bioshield Temperature	250°F	This signal is designed to detect high energy leaks or breaks at the top of the NuScale Power Module under the bioshield to reduce the consequences of high energy line breaks on the safety related equipment located on top of the module.	8.0 sec

Notes:

1. If RCS hot temperature is above 600°F. See Figure 15.0-9.
2. If RCS hot temperature is below 600°F. See Figure 15.0-9.
3. ~~RPV riser level and~~ CNV water level ~~are~~is presented in terms of elevation where reference zero is the bottom of the reactor pool. The range~~s~~ allows ±18~~20~~" from the nominal ECCS level setpoint of 282"~~370" and 240", respectively~~.
4. Normal AC voltage is monitored at the bus(es) supplying the battery chargers for the highly reliable DC power system. The analytical limit is based on Loss of Normal AC Power to plant buses (0 volts) but the actual bus voltage is based upon the voltage ride-thru characteristics of the EDSS battery chargers.
5. The overcooling event analyses account for a cooldown event specific process error analytical limit of 0.5%/°F.
6. The high count rate trip is treated as a source range over power trip that occurs at a core power analytical limit of 500kW which functionally equates neutron monitoring system counts per second to core power. This trip is bypassed once the intermediate range signal has been established.

3.3.4.4 Containment Vessel Analysis Results

Results for the design basis reflected detonation event are presented in Table 3-10 for the selected CNV locations. The last column on the right provides the ratio of maximum calculated stress to allowable stress for a reflected detonation occurring after 72 hours of gas accumulation.

Results show the CNV is able to withstand the reflected detonation event and maintain stresses below ASME Service Level C limits for 72 hours gas accumulation. {{

}}2(a),(c),ECI

Table 3-10 Containment vessel shell stresses from reflected detonation load (Level C loading)

Path No.	Calculated P_m (or P_L), psi	Limit P_m (or P_L), psi	Calculated P_L+P_b, psi	Limit P_L+P_b, psi	Calculated Triaxial Stress, psi	Limit Triaxial Stress, psi	Max Stress Ratio
1	{{						
2							
3							
4							
5							
6							
7							
8							
9							
10							
11							
12							
13							
14							
15							
16							}}2(a),(c),ECI

CLIP Program Element to Ensure Essentially Leak-Tight Barrier	NuScale Containment	Reactor Coolant Pressure Boundary Testing for NuScale and Other Licensed Facilities	Traditional Containment
Post-repair/ modification verification of structural integrity	Hydrostatic testing per ASME Section XI	Hydrostatic testing per ASME Section XI	ILRT

2.3 Type B Testing

Type B pneumatic tests (local penetration leak tests) detect and measure leakage across the pressure-retaining, leakage-limiting boundaries in the CNV. Preoperational and periodic Type B leakage rate testing is performed in accordance with 10 CFR 50, Appendix J, NEI 94-01, and ANSI-56.8 within the test intervals defined by the COL holder. The containment penetrations subject to Type B tests are identified in Appendix A.1. As described further in Section 3.0, the design of CNV penetrations allows accurate LLRT results to quantify overall containment penetration leak rates.

The design of NuScale CNV Type B penetrations is described in Section 3.2.

2.4 Type C Testing

The CIVs are designed to support Type C pneumatic tests. Preoperational and periodic Type C leakage rate testing of CIVs is performed in accordance with the 10 CFR 50, Appendix J requirements, ANSI-56.8, and the COL holder's technical specifications. The CIVs subject to Type C tests are identified in Section 3.3. As described further in Section 3.0, the design of CIVs allows accurate LLRT results to quantify overall CIV leak rates.

The design of NuScale CNV containment isolation valves is described in Section 3.3.

2.5 Containment Overall Leakage Limits

Per 10 CFR 50, Appendix J, L_a is defined as the maximum allowable containment leakage rate in weight percent per day at peak containment accident pressure P_a. For NuScale, L_a has been selected to be 0.20 weight percent of the containment air mass per day at the peak containment accident pressure ~~of 974 psia~~ (P_a) provided in FSAR Tier 2, Section 6.2.1, over 24 hours. L_a is established as a safety analysis operational limit for the NuScale Power Plant design. The values are used in consequence calculations to confirm that accident radiological containment leakage to the environment is within acceptable limits.

A NuScale engineering evaluation of all containment penetrations and access flanges (all leakage pathways) determined that the design can reliably meet the 10 CFR 50, Appendix J leakage criteria using an L_a of 0.20 weight percent of containment air mass per day at design pressure. The engineering evaluation concluded that the combined maximum expected leakage from all local penetrations with conservative margin for degradation, is less than [0.60]L_a, which is the acceptance criterion for LLRT per 10 CFR

50 Appendix J. The 0.20 weight percent of containment air mass at ~~design pressure~~1000 psia per day was converted to 18.05 standard cubic feet per hour (SCFH) at 1000 psia~~design pressure~~. This value was rounded down to 17.5 SCFH at ~~design pressure~~1000 psia and used as a design parameter by consequence calculations. This is a conservatively bounding approach since 10 CFR 50 Appendix J requires L_a to be specified at P_a, which is less than 1000 psia.

Table 2-2 documents NuScale containment design basis leakage rate criteria. The CLRT leakage rate limits for LLRT will be developed from these design basis limits to meet 10 CFR 50, Appendix J leakage criteria.

Testing to meet [0.60]L_a at P_a ensures that the operational limit of 0.20 weight percent of containment air mass per day can be met. Reference 7.1.5, SRP Acceptance Criteria 2 states that to satisfy GDC 38 to rapidly reduce the containment pressure, the pressure should be reduced to less than 50 percent of the peak calculated pressure for the design basis loss-of-coolant accident within 24 hours after the postulated accident. Following the peak containment pressure design basis accident, containment pressure drops from P_a to approximately 20 psia in four hours.

Table 2-2 Maximum allowable containment leakage rate limits

Leakage Rate	Pressure	Notes
~~**Containment Leakage Rate Limit**~~		
~~0.20 weight percent of containment air mass per day (L_a)~~ ~~17.4 SCFH air converted leakage rate~~	~~974 psia~~	~~P_a~~
Containment Leakage Rate Evaluation Parameters		
0.20 weight percent of containment air mass per day 17.5 SCFH air converted leakage rate	1,000 psia ~~(design pressure)~~	Leakage criteria used in consequence analysis, rounded down from 18.05 SCFH.

LLRT limits will be developed based on the values of Table 2-2, and will be based on a L_a at P_a and to meet < (0.60L_a).

The peak containment accident pressure (Pa) is identified in FSAR Tier 2, Section 6.2.1.

The NuScale CLRT is described further in section 5.3.

3.1 Containment Vessel Design

Approximately ~~94~~ 90 percent of the CNV is submerged in the ultimate heat sink (UHS) that removes residual core heat during normal and accident conditions. The CNV has a design pressure and temperature referenced in FSAR Tier 2, Section 6.2.1.~~of 1,000 psia and 550 degrees F.~~ The CNV is a steel vessel with relatively low volume (approximately 6,144 ft^3) compared to other PWR containments and has no internal subcompartments. The design prevents isolated pockets of concentrated gases. The upper portion of the CNV is constructed of low alloy carbon steel with stainless steel cladding on the inside and outside surfaces. The bottom portion of the CNV is constructed of stainless steel. The CNV will be factory fabricated, which facilitates enhanced fabrication quality and testing control.

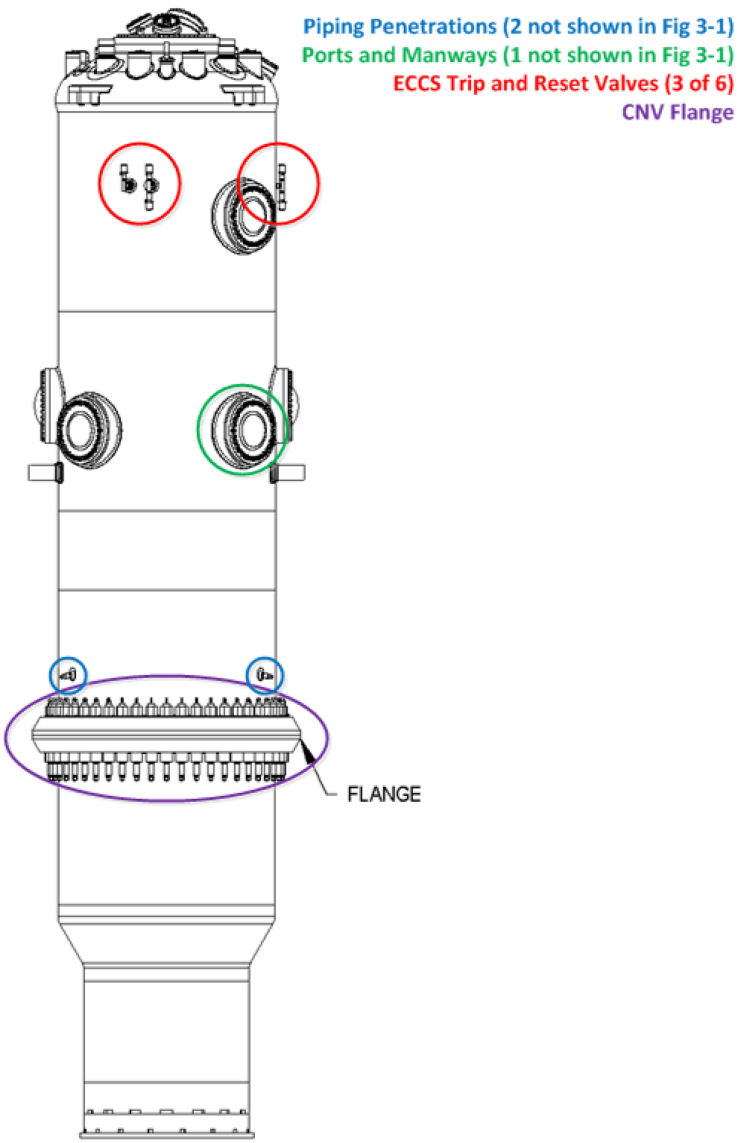

Figure 3-2 Containment vessel

4.0 Preservice Inspection and Testing

4.1 Manufacturing Facility Testing and Inspection

The CNV is hydrostatically tested in the factory in accordance with ASME Subsection NB-6000. The water-filled CNV is pressurized to a minimum of 25 percent over design pressure ~~(1,250 psia)~~ for at least 10 minutes. Pressure is then reduced to design pressure ~~(1,000 psia)~~ and held for at least four hours prior to examining for leaks. The acceptance criterion is no leakage indications at the examination pressure (design pressure). Nondestructive examination of the CNV in the factory includes:

- All pressure-retaining and integrally-attached materials examination meets the requirements of NB-5000 and NF-5000 using examination methods of ASME Boiler and Pressure Vessel Code Section V.
- All clad surfaces are magnetic particle or liquid penetrant examined in accordance with NB-2545 or NB-2546, respectively, of Reference 7.1.7 prior to cladding.
- ASME Code Class 1 pressure boundary examinations are in accordance with NB-5280 and IWB-2200 using examination methods of ASME Boiler and Pressure Vessel Code Section V as modified by NB-5111. Preservice examinations shall include 100 percent of the pressure boundary welds.
- ASME Code Class MC examinations are subsumed by NB exam requirements. The Class MC examination is in accordance with IWE-2200. In addition, due to the high pressure design of the CNV, the preservice examination requirements of IWB-2200 are applied (Reference 7.1.7).
- Final preservice examinations are performed after hydrostatic testing, but prior to code stamping.

4.2 Preservice Design Pressure Leakage Testing

A separate preservice design pressure leakage test is performed on the CNV. This test is performed to ensure that the integrated leakage of the CNV meets design criteria. This test is performed on every NuScale CNV and shall contain the following elements:

- This test is required under a separate ITAAC.
- As-designed flange covers shall be installed with the design bolting materials, design bolting assembly preloads, and design seals installed.
- CNV bolted flanges shall be in place. Covers with electrical and instrumentation penetrations may be substituted with blank covers having the same sealing design.
- The upper and lower halves of the CNV are assembled for the first module of the initial NuScale plant. After the first CNV for the initial plant is tested successfully, the upper and lower halves of all other containment vessels may be tested separately.
- The CNV is pressurized with water to design pressure and no observed leakage shall be visible from any joint.
- A COL Item requires the applicant to verify that the CNV design meets the design basis requirement to maintain flange contact pressure at accident temperature.

5.2 Inservice Testing of the Containment System

The NuScale standard IST Plan, as defined in FSAR Section 3.9.6, identifies all valves with specific leakage criteria. Valves with specific leakage criteria as a containment boundary are identified as "LTJ," a valve with an Appendix J Type C leakage test requirement. The IST Plan also specifies test frequencies that are pursuant to the requirements of 10 CFR 50, Appendix J, Option A, (III)(D)(3). The NuScale IST program identifies all valves in the NuScale design that have a Type C test requirement. The NuScale IST plan specifies IST requirements for the NuScale Power Plant design.

5.3 Type B Local Leak Rate Testing

Type B tests of the double O-ring seals on the containment bolted closures are performed by local pressurization at containment peak accident pressure, P_a. Pressurized gas, such as air or nitrogen, is applied to the leak test ports, which are provided between the two O-ring seals in each bolted closure, and the pressure-decay over time or the leak flow rate is measured. All Type B tests use either the pressure-decay or flow-makeup method of detection as described in Reference 7.1.10. For the pressure-decay method, a test volume is pressurized with air or nitrogen to at least P_a. The rate of decay of pressure in the known test volume is monitored over time to calculate a leakage rate. For the flow-makeup method, the required test pressure is maintained in the test volume by making up test fluid, such as air or nitrogen, through a calibrated flowmeter. The makeup-flow rate is the leakage rate from the test volume.

The design combined leakage rate for all penetrations and valves subject to Type B and Type C tests is limited to less than (0.60) L_a. An overall leak rate of less than (0.60) L_a will be confirmed by LLRT prior to the startup of each NPM. In accordance with 10 CFR 50, Appendix J, Type B tests are performed during each reactor shutdown for refueling or other convenient intervals in accordance with the CLRT Program.

5.3.1 Type B Test Method

P_a, the bounding peak containment accident pressure, given in FSAR Tier 2, Section 6.2.1, has been calculated to be less than 1,000~~974~~ psia. All double O-ring (Type B) seals are tested with air or nitrogen at a pressure not less than P_a.

All Type B penetrations are tested each refueling outage. An as-found test is required to be performed before any Type B penetration is opened or manipulated in any way that would affect the as-found test. See Section 5.4.2 for a discussion of test considerations, including preconditioning. Test equipment is installed on the test port that is located between the double O-ring seals. The seal is then tested with compressed air or nitrogen using either the pressure-decay or flow-makeup method to measure the leakage as specified in the CLIP. Once as-found testing is performed and documented, the penetration can be opened. Just inside the CNV head manway is a small tubing connection to the CNV flange test port. The Type B test rig is connected here and an as-found test of the CNV flange is performed.

Once the refueling outage is completed and penetrations are closed for the final time, an as-left Type B test is performed on penetrations (Reference 7.1.3). If a penetration was

5.3.6 Bolting

The CNV bolting design for all EPAs, ports and manways is in accordance with ASME Section III, Division 1, NB-3231. Calculations were performed to verify the number and cross-sectional area of bolts required to withstand containment design pressure and maintain gasket reaction for leak tightness. The calculations were performed in accordance with ASME Boiler and Pressure Vessel Code Section III, Appendix E. The calculations determined the quantity, size, and spacing of the bolting for the ASME Code Class 1 flanges. The CNV bolted-closure design and preload design requirements ensure that Type B flange seals, including EPAs, remain sealed at design pressure.

Flanges are as-found tested in accordance with 10 CFR 50, Appendix J before removal for refueling outage activities. The COL holder's administrative controls are used during reassembly, including dual torque verification and QC hold points, to ensure EPAs, ports, manways, and flange seals are reassembled with fasteners at the correct torque. An as-left Type B test on the penetration seal verifies leakage is within the CLIP limits.

5.4 Type C Local Leak Rate Testing

The PSCIVs are tested using either the pressure-decay or flow-makeup method. For the pressure-decay method the test volume is pressurized with air or nitrogen. These test methods are described in Section 5.3. Pressure to the PSCIV is applied in the same direction as the pressure is applied when the valve is required to perform its safety function.

5.4.1 Type C Test Method

The PSCIVs are local leak rate tested using the pressure-decay method or the flow-makeup method at a pressure not less than P_a, which has been calculated to be less than 1,000~~974~~ psia.

Each CIV to be tested is closed by normal means without any preliminary exercising or adjustments (see Section 5.4.2). This closure can be the periodic closed stroke required as part of the IST Program. Piping is drained and vented as needed and a test volume is established that when pressurized, produces a differential pressure across the valve. The valve is then prepared for testing by removing the normal insert and replacing it with a test blank insert in the valve body (Figure 5-1). The test blank is closed to the CNV to establish the pressure boundary for the test in the same direction as would be required for the valve to perform its safety function. Test equipment is installed on the test port located between the test blank and the inboard ball. The valves are aligned so that a vent path is established downstream of the tested valve. The valve is then tested with air or nitrogen using either the pressure-decay or flow-makeup method as specified in the CLIP.

When valve testing is completed, the test equipment is vented and the valves realigned. The tested valve is opened and the second CIV closed. The test alignment for the second CIV is established. The test equipment is repressurized and the second valve tested.

hemispherical cartridge valve design. Additionally, each site employing the NuScale design will have 12 identical containment systems.

- Maintain records to produce a periodic leakage test summary report to the NRC in accordance with 10 CFR 50, Appendix J.

5.5.1 Containment Leakage Limits

The leakage rates of penetrations and valves subject to Type B and C testing are combined in accordance with 10 CFR 50, Appendix J. The combined leakage rate for all penetrations and valves subject to Type B and C testing shall be less than (0.60) L_a at P_a. Design basis containment leakage limits:

- L_a = 0.20 weight percent, dry air inside containment at design pressure
- L_a = ~~17.4~~approximately 17.5 SCFH, dry air inside containment at peak containment accident pressure~~design pressure~~
- P_a = ~~974 psia,~~ peak containment accident pressure, given in FSAR Tier 2, Section 6.2.1

The CLIP limits are derived from the design basis limits to meet (0.60) L_a for LLRT. If repairs are required to meet CLIP limits, the results are reported in a separate summary to the NRC in accordance with Reference 7.1.3, including the structural conditions of the components that contributed to the failure. As each Type B or C test, or group of tests, is completed, the combined total leakage rate is revised to reflect the latest results. Thus, a reliable summary of containment leak tightness is maintained current. Leakage rate limits and the criteria for the combined leakage results are described in the plant technical specifications.

5.5.2 Test Frequency

Schedules for performance of periodic Type B tests are specified in the COL holder's IST Program and periodic Type C tests are also specified. Provisions for reporting test results are described in the COL holder's leak rate testing program.

Conditional testing is in accordance with the COL holder's procedures, but includes Type B or C testing anytime repair, replacement, or modification to a containment pressure boundary takes place.

Type B tests are performed during reactor shutdown or refueling, or other convenient intervals, but in no case at intervals greater than two years (as specified in the COL holder's ISI Program) per 10 CFR 50, Appendix J. Type C tests are performed during reactor shutdown or refueling, but in no case at intervals greater than two years (as specified in the COL holder's IST Program.

5.5.3 Test Results and Reporting Requirements

The CLIP program reporting requirements are pursuant to 10 CFR 50, Appendix J, Option A (V) (Reference 7.1.3). Preoperational and periodic tests are documented in a summary report that is made available for inspection, upon request, at the plant site. The summary report includes, at a minimum:

Penetration Identification	**CNV10**		**CNV11**		**CNV12**	
Failure Position	Closed	Closed	Closed	Closed	Closed	Closed
Primary Actuation	Automatic	Automatic	Automatic	Automatic	Automatic	Automatic
Secondary Actuation	Remote manual	Remote manual	Remote manual	Remote manual	Remote manual	Remote manual
Power Source	Nitrogen accumulator	Nitrogen accumulator	Nitrogen accumulator	Nitrogen accumulator	Nitrogen accumulator	Nitrogen accumulator
Design Pressure	2100 psia(1)	2100 psia(1)	2100 psia(1)	2100 psia(1)	2100 psia(1)	2100 psia(1)
Design Temperature	650 F(1)	650 F(1)	650 F(1)	650 F(1)	650 F(1)	650 F(1)
Seismic Category	I	I	I	I	I	I
Design Code Valve	Section III, NB(2)	Section III, NB(2)	Section III, NB(2)	Section III, NB(2)	Section III, NB(2)	Section III, NB(2)

(1) Valve provides a containment boundary and is classified as ASME Code Class 2 with a minimum design pressure and temperature requirement equivalent to the CNTS (~~1,000~~1,050 psia, 550 F). However, all PSCIVs are designed to ASME Section III NB with a design pressure and temperature requirement equivalent to the RCS (2100 psia, 650 F).

5.0 Summary and Conclusions

This report evaluates the CNV to determine an ultimate pressure capacity for a beyond design basis LOCA event. Multiple finite element models and analyses were used to evaluate the bolted connections, shell regions away from concentrations, and buckling of the knuckle regions in the heads.

The CNV ultimate pressure capacity is determined to be 1,240 psi as a result of the PZR heater access cover displacing 0.03 inches at the cover's outer O-ring. This ultimate pressure capacity is above the 1,050~~1,000~~ psi design pressure of the CNV and is calculated based on conservative analyses. Much of the conservatism in the analyses lies in use of the design temperature for material properties and in the plastic behavior (plastic modulus) modeled for the materials.

Executive Summary

This report presents the NuScale Power, LLC, (NuScale) methodology used to analyze the mass and energy release into the containment vessel (CNV) for the spectrum of design basis transients and accidents, and the resulting pressure and temperature response of the CNV. The NuScale Power Module (NPM) limiting peak pressure and temperature results determined using the methodology are presented.

The containment response analysis methodology uses the NRELAP5 thermal-hydraulic code, which is a NuScale-modified version of the RELAP5-3D© v 4.1.3 code used for loss-of-coolant accident (LOCA) and non-LOCA transient and accident analyses, including the response of the CNV.

The NRELAP5 model used to model NPM performance for primary system LOCA and emergency core cooling system valve-opening event analyses is similar ~~with~~ to the model used in the LOCA evaluation model, described by Reference 7.2.1. The NRELAP5 model used for secondary system pipe-break analysis in the containment response analysis methodology is ~~consistent with~~ similar to the non-LOCA model described by the Non-LOCA Evaluation Model Report (Ref: 7.2.2). Changes made to these models that maximize containment pressure and temperature response to primary and secondary system release events are described in this report. These changes conservatively maximize the mass and energy release and minimize the performance of the containment heat removal system and are consistent with acceptance criteria given by Design Specific Review Standard Section 6.2.1.3 (Ref: 7.1.6) and Design Specific Review Standard Section 6.2.1.4 (Ref: 7.1.7).

~~Other differences exist between the NRELAP5 model used to model NPM performance for primary system LOCA and emergency core cooling system valve-opening event analyses and the containment analysis model. These modeling differences, identified in Section 3.2.4.1, have a negligible impact on the CNV analysis results.~~

Initial and boundary conditions for the spectrum of primary system release containment response analyses and secondary system pipe break analyses are selected to ensure a conservative CNV peak pressure and peak temperature result. These initial and boundary conditions are described in this report, along with the rationale for their selection.

The results of the NRELAP5 limiting analyses using the containment response analysis methodology are presented in this report. These analyses cover the spectrum of primary system mass and energy release scenarios for the NPM, and secondary system pipe break scenarios.

The limiting LOCA peak pressure and CNV wall temperature are a result of the reactor coolant system (RCS) injection line break. The LOCA limiting peak CNV wall temperature is approximately ~~523~~526 degrees F and it results from a reactor coolant system injection line break case, with a loss of normal alternating current (AC) power. The LOCA limiting peak internal pressure is approximately ~~921~~959 psia, which ~~also~~ results from a reactor coolant system injection line break case with a loss of normal AC and DC power. The LOCA event peak CNV pressure is below the CNV design pressure of ~~1000~~1050 psia. The LOCA peak CNV pressure and wall temperature bound the main steamline break (MSLB) and feedwater line break (FWLB) results.

The overall limiting peak CNV accident pressure is approximately ~~951~~986 psia, which is approximately 6 percent below the containment design pressure of 1050 psia. It results from an inadvertent reactor recirculation valve opening anticipated operational occurrence with a loss of normal AC and ~~direct current (~~DC~~)~~ power.~~The peak pressure of the limiting anticipated operational occurrence is also less than the CNV design pressure of 1000 psia.~~ The CNV pressure for this limiting case is reduced to below 50 percent of the peak value in less than 2 hours, demonstrating adequate NPM containment heat removal.

Section 5.4 discusses margin in the NPM design that is not included in the CNV design pressure rating or modeled in the containment response analyses. Design factors conservatively not credited include atmospheric pressure acting against the CNV ~~shell stress margins, CNV cladding material~~exterior surface and the availability of the decay heat removal system (DHRS).

The containment response analysis methodology demonstrates that the NPM design has adequate margin to design limits and that it satisfies the requirements of General Design Criteria (GDC) 16, 50, and Principal Design Criterion (PDC) 38.

2.0 Background

The CNV is a compact, steel pressure vessel that consists of an upright cylinder with top and bottom head closures. The CNV is partially immersed in a below-grade reactor pool that provides a passive heat sink and is absent of internal sumps or subcompartments that could entrap water or gases. The CNV and the reactor pool are housed within a Seismic Category 1 Reactor Building. The unique nature of the NPM design necessitates development of a specific containment response analysis methodology.

This technical report describes the thermal-hydraulic accident analysis methodology for primary and secondary system M&E releases into the CNV of the NPM, and the resulting pressure and temperature response of the CNV. This report presents the bases for the analysis methodology and results in support of Chapter 6 of the NuScale Final Safety Analysis Report (FSAR). The containment response analysis methodology and CNV peak pressure and temperature results are compared to applicable regulatory guidance, including the Design Specific Review Standard for NuScale Small Modular Reactor (SMR) Design, Section 6.2.1 (Ref: 7.1.4). A spectrum of M&E release events is analyzed that bounds all of the LOCAs and valve-opening transients in the primary system and all secondary-system pipe-break accidents. The containment response analysis methodology uses conservative initial conditions and boundary conditions to ensure overall conservative results. The limiting results are shown to be less than the design pressure (~~1000~~1050 psia) and the design temperature (550 degrees F) of the CNV.

The qualification of the LOCA, valve opening event and non-LOCA methodologies presented in Reference~~s~~ 7.2.1 and Reference 7.2.2, in particular the comparisons to separate effects tests and integral effects tests, are applicable for the containment response analysis methodology presented in this report. The differences in the NRELAP5 simulation models used in the containment response analysis methodology as compared to the LOCA, valve opening event and non-LOCA models, along with the rationale for the selection of conservative initial and boundary conditions, are the subject of this report. Analysis results are presented for the limiting cases~~, along with nominal condition case results, demonstrating conservatism in certain initial conditions~~.

2.1 Regulatory Requirements

The Nuclear Regulatory Commission (NRC) regulations and regulatory guidance applicable to the containment response analysis methodology are described in this section. The elements of the containment response analysis methodology that address each of these regulations and requirements are discussed.

2.1.1 10 CFR 50 Appendix A - General Design Criteria for Nuclear Power Plants

The General Design Criteria (GDC) for Nuclear Power Plants, Appendix A to 10 CFR 50 (Ref: 7.1.2), include the NRC regulations applicable to the containment response methodology. Compliance with GDC 16 and 50 and PDC 38 is as follows:

General Design Criterion 16 - The analyses performed per the containment response analysis methodology are used to establish the limiting CNV pressure and temperature conditions resulting from the spectrum of design-basis primary system and secondary

or feedwater line break. Design margins of less than 10% may be sufficient, provided appropriate justification is provided. For plants at the operating license (OL) or COL stage of review, the peak calculated containment pressure following a LOCA, or a steam or feedwater line break, should be less than the containment design pressure.	~~or FWLB peak pressures. Additionally, the overall peak~~The overall limiting peak CNV accident pressure ~~resulting from an inadvertent reactor recirculation valve (RRV) opening event~~ is approximately 986 psia, which is approximately ~~5~~6 percent below the ~~CNV~~containment design pressure~~.~~ of 1050 psia. It results from an inadvertent reactor recirculation valve opening anticipated operational occurrence with a loss of normal AC and DC power. Additional margin is provided by the NPM design to satisfy the requirements of GDC 16 and 50 as discussed in Section 5.4.
To satisfy the requirements of GDC 38 to rapidly reduce the containment pressure, the containment pressure should be reduced to less than 50% of the peak calculated pressure for the design basis LOCA within 24 hours after the postulated accident. If analysis shows that the calculated containment pressure may not be reduced to 50% of the peak calculated pressure within 24 hours, the organization responsible for DSRS Section 15.0.3 should be notified.	The containment response analysis methodology is applicable to the initial CNV response and demonstrates that the peak pressure and temperature are within the CNV design limits. The methodology also demonstrates that the CNV pressure decreases to less than 50 percent of the peak pressure within 24 hours to satisfy the requirements of Principal Design Criterion 38 for rapid reduction of containment pressure. Figure 5-29 demonstrates that the CNV pressure for the limiting case is reduced to less than 50 percent of its peak value in less than two hours. This demonstrates the CNV heat removal capability.
DSRS Section 6.2.1.1.A, p. 5	Containment Response Analysis Methodology
To satisfy the requirements of GDC 38 and 50 with respect to the containment heat removal capability and design margin, the LOCA analysis should be based on the assumption of loss of offsite power and the most severe single failure in the emergency power system (e.g., a diesel generator failure), the containment heat removal systems (e.g., a fan, pump, or valve failure), or the core cooling systems (e.g., a pump or valve failure). The selection made should result in the highest calculated containment pressure	The containment response analysis methodology models engineered safety features involving the containment heat removal function and the ECCS. Conservative assumptions regarding safety feature performance, in conjunction with conservative initial and boundary conditions, ensure that the CNV peak pressure and temperature analysis results following a primary system release are bounding (See Section 5.4). A limiting single failure is considered (See Section 5.1.1). Sensitivity cases considering the availability of power are performed to ensure that assumptions associated with availability of these systems ensure

pressures converge, and continued heat transfer to the CNV leads to a gradual cooldown and depressurization phase. Pressure equalization enables recirculation flow from the CNV pool through the RRVs to establish the long-term cooling recirculation alignment.

The primary system response for the RCS injection line LOCA CNV peak pressure case is shown in Figures 5-3 through 5-9. Figure 5-3 shows the primary pressure response. The initial depressurization phase due to the LOCA is followed by the rapid depressurization when the RVVs open. Figures 5-4 and 5-5 show the inventory in the pressurizer and in the riser. These figures show the expected trend of a decreasing level in the primary followed by a stabilization in inventory, with some liquid holdup in the pressurizer. A sensitivity study that decreased the interphase drag in the upper riser, riser upper plenum, pressurizer baffle, pressurizer, and the downcomer, with the intent of reducing liquid entrainment, showed that there was no adverse impact on the peak CNV pressure for this case. Figure 5-6 shows the primary coolant temperatures at six locations. Following ECCS actuation the temperatures converge and the cooldown proceeds. Figure 5-7 shows the LOCA and ECCS mass flowrates ~~although~~including the spike in mass release when ECCS valves open~~ is not shown because of reduced plot frequency~~. Figures 5-8 and 5-9 show the integrated LOCA and ECCS mass flowrate and energy flowrate. Based on the integrated mass and energy flow rate plots, it is evident that the ECCS flow through the three RVVs into the CNV is significant. It is this M&E flow spike that causes the peak CNV pressure and wall temperatures to occur shortly thereafter as shown in Table 5-3.

The CNV and reactor pool responses for the RCS injection line LOCA peak pressure case are shown in Figures 5-10 to 5-15. Figure 5-10 shows the CNV pressure response and the limiting LOCA value of ~~921~~959 psia. This NRELAP5 analysis result is approximately ~~8~~9% below the CNV design pressure of ~~1000~~1050 psia. This is a key result of this limiting LOCA containment pressure response analysis case. Pressure increases rapidly to the peak value immediately following opening of the RVVs. Figure 5-11 shows the CNV liquid level increase as the unflashed break flow and condensed steam accumulates. Figure 5-12 shows the CNV vapor temperature. {{

}}2(a),(c) Figure 5-13 shows the temperature profile across the CNV wall at the 45 foot elevation. There is a large temperature gradient across the CNV wall. Figure 5-14 shows the reactor pool temperatures for a range of elevations. The reactor pool temperature does not increase significantly for the short duration of these analyses. From Figures 5-13 and 5-14 it is evident that the NPM design provides an effective heat sink for these short-term M&E analyses. Even with the conservative initial reactor pool level of ~~55~~65 ft above the pool floor and a temperature of ~~140~~110 degrees F assumed in this analysis, the peak CNV wall temperature remains within the design limit.

Figure 5-15 shows the energy balance during the CVCS injection line LOCA and the trends of the heat sources and sinks. At approximately ~~1400~~1000 seconds, the energy release

The primary system response for the Case 5 inadvertent RRV opening event (peak pressure case) is shown in Figures 5-22 through 5-28. Figure 5-22 shows the primary pressure response. The initial depressurization phase due to the RRV opening is continued by the rapid depressurization when the RVVs open. Figures 5-23 and 5-24 show the inventory in the pressurizer and in the riser. These figures show the expected trend of a decreasing level in the primary followed by a stabilization in inventory, with some liquid holdup in the pressurizer. A sensitivity study that decreased the interphase drag in the upper riser, riser upper plenum, pressurizer baffle, pressurizer, and the downcomer with the intent of reducing liquid entrainment, showed that there was no adverse impact on the peak CNV pressure for this case. Figure 5-25 shows the primary coolant temperatures at six locations. Following ECCS actuation the temperatures converge and the cooldown proceeds. Figure 5-26 shows the RRV opening and ECCS mass flowrates. It is evident that the ECCS flow immediately following ECCS actuation, mainly the flow through the three RVVs into the CNV, is significant. It is this flow spike that causes the peak CNV pressure and wall temperatures to occur shortly thereafter as shown in Table 5-6. Figures 5-27 and 5-28 show the integrated LOCA and ECCS mass flowrate and energy flowrate.

The CNV and reactor pool response for the Case 5 inadvertent RRV actuation LOCA is shown in Figures 5-29 to 5-34. Figure 5-29 shows the CNV pressure response and how pressure rapidly increases to the limiting peak value of ~~951~~986 psia. This limiting NRELAP5 result can be compared to the CNV design pressure of ~~1000~~1050 psia. This is a key result of this limiting containment response analysis case. Figure 5-29 also demonstrates the long term cooling capability of the UHS. CNV pressure is reduced to below 50 percent of the peak value within two hours of accident initiation.

Figure 5-30 shows the CNV liquid level increase as the unflashed break flow and condensed steam accumulates. Figure 5-31 shows the CNV vapor temperature. Initially, flashing of the break flow at low CNV pressure results in a temperature decrease. {{

}}2(a),(c) Figure 5-32 shows the peak CNV wall temperature and the limiting value of ~~506~~492 degrees F. Figure 5-33 shows the temperature profile across the CNV wall at the 45 foot elevation. There is a large temperature gradient across the CNV wall. Figure 5-34 shows the reactor pool temperatures for a range of elevations. The reactor pool temperature does not increase significantly for the short duration of these M&E release analyses. From Figures 5-31 through 5-34 it is evident that the CNV wall is the significant heat sink in the short-term. Even with the conservative initial reactor pool level of ~~55~~65 ft above the pool floor and a temperature of ~~140~~110 degrees F assumed in these analyses, the CNV wall is capable of maintaining the peak CNV pressure within the design limit.

Figure 5-35 shows the energy balance during the RRV loss-of-coolant accident and the trends of the heat sources and sinks. At approximately ~~700~~750 seconds the energy release from the LOCA and the RVV valves decreases to below the energy transferred through the CNV wall. The CNV wall then continues to provide a strong heat sink for the sustained cooldown and depressurization of the module.

condenses on the cold ID of the CNV. The condensate flows down the CNV walls and accumulates in a pool in the CNV lower head. The cold CNV wall absorbs the energy of the condensed steam and starts to heat up by conduction. Eventually the energy is transferred through the CNV wall to the reactor pool, and the pool temperature slowly increases.

The module response for the MSLB is shown in Figures 5-36 through 5-51. Figure 5-36 shows the SG pressure response with the affected SG (SG2) depressurizing via blowdown out the break into the CNV. The unaffected SG (SG1) initially depressurizes until the MSIV closes, and then gradually pressurizes following ~~DHRS actuation~~isolation. Figure 5-37 shows the primary system temperature response due to the initial secondary system blowdown and then following ~~DHRS actuation~~ secondary side isolation. Figure 5-38 shows the primary system pressure response with the initial depressurization following secondary system blowdown, and then the pressure increasing from operation of the pressurizer heaters ~~during DHRS operation~~ following secondary side isolation. Figure 5-39 shows that the pressurizer level rapidly decreases during the initial overcooling, and then gradually ~~decreases~~increases in response to the decrease in primary temperatures ~~during DHRS operation~~following secondary side isolation. Figures 5-40 through 5-42 show the secondary system mass release, the integrated mass release, and the integrated energy release into the CNV, respectively. The liquid entrainment in the break flow was negligible, and therefore the sensitivity study on interphase drag upstream of the break flow was not necessary.

The CNV and reactor pool responses for the MSLB are shown in Figures 5-43 to 5-48. Figure 5-43 shows the CNV pressure response. The pressure rapidly increases to the limiting peak value of ~~419~~449 psia at ~~41~~42 seconds. This limiting NRELAP5 result can be compared to the CNV design pressure of ~~1000~~1050 psia, and to the limiting primary release event result. The MSLB result is bounded by the limiting LOCA (Case 2) and overall limiting primary release event result (Case 5). This is a key result in this MSLB containment response analysis.

Figure 5-44 shows the CNV vapor temperature. {{

}}2(a),(c) Figure 5-45 shows the peak CNV wall temperature and the limiting value of ~~427~~428 degrees F at ~~46~~41 seconds. This limiting NRELAP5 result can be compared to the CNV design temperature of 550 degrees F, and to the limiting LOCA result. The MSLB result is bounded by the limiting primary release event result (Case 2). This is a key result in this MSLB containment response analysis.

Figure 5-46 shows the CNV level response. Figure 5-47 shows the temperature profile across the CNV wall. There is a large temperature gradient. Figure 5-48 shows the reactor pool temperatures for a range of elevations. The reactor pool temperature does not increase significantly for the short duration of these analyses. From these results it is evident that the CNV wall is the significant heat sink for these containment response analyses. Even with the conservative initial reactor pool level of ~~55~~65 ft above the pool

compared to the CNV design pressure of ~~1000~~1050 psia and to the limiting MSLB and primary release event results. The FWLB peak CNV pressure result is higher than the MSLB result, but is bounded by the limiting LOCA results. This is a key result in this FWLB containment response analysis.

Figure 5-59 shows the CNV vapor temperature. {{

}}2(a),(c) Figure 5-60 shows the peak CNV wall temperature and the limiting value of ~~414~~407 degrees F. This limiting NRELAP5 result can be compared to the CNV design temperature of 550 degrees F, and to the limiting MSLB and LOCA results. The FWLB is bounded by both the MSLB result and the limiting primary release event results. This is a key result in this FWLB containment response analysis.

Figure 5-61 shows the CNV level response with an initial level increase following the initial M&E release, and the second level increase following the delayed opening of the ECCS valves. Figure 5-62 shows the temperature profile across the CNV wall at the 45 foot elevation. A significant temperature gradient exists. Figure 5-63 shows the reactor pool temperature for a range of elevations. Clearly the reactor pool temperature does not increase significantly through the time of peak CNV pressure and temperature. Even with the conservative initial reactor pool level of ~~55~~65 ft above the pool floor and a temperature of ~~140~~110 degrees F assumed in these analyses, the CNV wall is capable of maintaining the peak CNV pressure and temperature within the design limit.

Figure 5-64 shows the energy balance during the FWLB and the trends of the heat sources and sinks. The DHRS and CNV wall heat sinks combine to exceed the ECCS energy release and results in a sustained cooldown of the primary system as shown in Figure 5-51.

and DC power. The overall limiting CNV peak pressure, is 986 psia, which is approximately 6 percent below the design pressure of 1050 psia, which occurs at a CNV elevation at the bottom of the CNV. Atmospheric pressure and reactor pool hydrostatic head, acting against the CNV exterior surface, provides approximately 22 psi additional margin, that is not credited by the CNV response analysis methodology.

This demonstrates additional margin in the CNV design that is not considered by the containment ~~design pressure rating~~response analysis.

5.4.2 Decay Heat Removal System Availability

The LOCA (Case 2) and AOO ~~Case 2 and~~ (Case 5) are performed with and without DHRS available to estimate the impact of DHRS availability on the CNV peak pressure response. The DHRS is conservatively not credited in the design basis containment response analysis cases. The NRELAP5 code has not been validated to cover DHRS performance during LOCAs or valve opening events. However, the DHRS is a single-failure proof safety-related system that can be credited in the future, with additional NRELAP5 validation, if the CNV pressure margin is reduced for any reason (design changes). The results of the DHRS available cases indicate that ~~more than 25 psia~~about 37 psi additional margin could be gained by credit for DHRS availability.

5.4.3 Conclusion

The NPM design provides sufficient margin to satisfy the requirements of GDC 16 and 50. The LOCA peak pressure provides approximately 9% and the AOO peak pressure provides approximately 6% margin to the CNV design pressure of 1050 psia, to address the acceptance criteria given by DSRS Section 6.2.1.1.A (See Table 2-2). The CNV response to the limiting LOCA event and AOO transient are conservatively calculated and demonstrate that the peak calculated pressures are below the CNV design pressure and decrease in pressure to one-half of the peak value within 24 hours.

Further assurance of sufficient margin is provided through consideration of ~~the robust design~~atmospheric pressure and hydrostatic head, acting against the CNV exterior surface and ~~construction of the NPM and conservative assumptions related to the crediting~~availability of the DHRS system in the containment response analysis. Consideration of external pressure acting against the CNV exterior surface reduces the differential pressure across the CNV wall by about 22 psi. The determination of NPM design pressure, in accordance with ASME Class 1 criteria, is conservative relative to Class MC and CC containments. This design pressure does not consider the additional margin provided by the internal and external cladding of the upper CNV shell. The effect of DHRS actuation in reducing peak containment pressure was not credited in the containment response analysis. Consideration of the effect of DHRS actuation, along with external pressure acting against the CNV exterior surface, reduces the differential across the CNV wall by approximately 59 psi.

The containment response analysis methodology, analysis results and further conservatisms related to design and system operation provide assurance that the NPM design demonstrates sufficient margin to satisfy the requirements of GDC 16 and 50.

- For the limiting cases the results of the sensitivity studies, including postulated single failures~~ and the loss of normal AC and DC power~~, showed only a limited impact (~~≈~~<1 percent) on the key figures-of-merit. The loss of normal AC and DC power and the timing of ECCS valve opening were the most important sensitivity parameters.

The limiting LOCA peak pressure and CNV wall temperature are a result of the reactor coolant system (RCS) injection line break. The LOCA limiting peak CNV wall temperature is approximately ~~523~~526 degrees F and it results from a reactor coolant system injection line break case, with a loss of normal alternating current (AC) power. The LOCA limiting peak pressure is ~~921~~approximately 959 psia, which ~~also~~ results from a reactor coolant system injection line break case, with a loss of normal AC and DC power. The LOCA event peak CNV pressure is below the CNV design pressure of ~~1000~~1050 psia. The LOCA peak CNV pressure and wall temperature bound the main steamline break (MSLB) and feedwater lind break (FWLB) results.

The overall limiting peak CNV accident pressure is approximately ~~951 psia and it~~ 986 psia, which is approximately 6 percent below the containment design pressure of 1050 psia. It results from an inadvertent reactor recirculation valve opening ~~AOO,~~ anticipated operational occurrence with a loss of normal AC and DC power. ~~This~~The peak pressure of the limiting anticipated operational occurrence is also less than the CNV design pressure of ~~1000~~1050 psia. The CNV pressure for this limiting case is reduced to below 50 percent of the peak value in less than 2 hours, demonstrating adequate NPM containment heat removal.

Section 5.4 discussed margin in the NPM design that is not included in the CNV design pressure rating or modeled in the containment response analyses. Design factors conservatively not credited include ~~CNV shell stress margins, CNV cladding material~~ atmospheric pressure acting against the CNV exterior surface and the availability of the DHRS.

The containment response analysis demonstrates that the NPM design has adequate margin to design limits and that it satisfies the requriements of GDC 16 and 50 and PDC 38.

5.10 Containment System

5.10.1 System Design

The containment system (CNTS) is part of the NPM and is the containment for the RCS. The CNTS components include multiple support structures, the CNV, the CIVs, and CNTS instruments.

The CNV is a metal containment pressure vessel forming a barrier to prevent release of radioactivity and radiological contaminants. The RCS, the control rod drive system, select DHRS components, select primary system piping and valves, and the ECCS main valves are contained in the CNV. During normal operation, the CNV is partially immersed in the RP portion of the UHS, which allows the CNTS design to provide the function of containment heat removal. The CNV is safety-related and its significant design parameters are listed in Table 5-1.

Table 5-1 Significant containment vessel parameters

Parameter	Value
Internal design pressure	1,050~~1,000~~ psia
External design pressure	Atmospheric pressure plus UHS static head pressure
Design temperature	550 degrees F
Internal operating pressure	0.1 psia
External operating pressure	Atmospheric pressure plus UHS static head pressure
Operating temperature	100 degrees F

The CIVs can be subdivided into two categories: the primary system containment isolation valves (PSCIVs) and secondary system containment isolation valves (SSCIVs).

For lines that penetrate a CNV boundary and are either part of the reactor coolant pressure boundary or are connected directly to the containment atmosphere, two in-series safety-related PSCIVs are provided. The two PSCIVs for a given line are located in the same valve body, which is welded directly to the CNV penetration to minimize the distance the valves are from the CNV.

One SSCIV is provided per line[13] for the main steam lines, main steam bypass lines, and feedwater lines that penetrate a CNV boundary but are neither part of the reactor coolant pressure boundary, nor connected directly to the containment atmosphere. The SSCIV and PSCIV actuators are similar in design and their manner of operation is covered by the description of the CIV operation.

[13] The feedwater lines also include a safety-related check valve that is provided for DHRS inventory preservation rather than containment isolation.

5.13.2 Equipment Qualification

The ECCS valves, hydraulic lines, and actuators are part of the reactor coolant pressure boundary and all components are Seismic Category I. All components of the ECCS are located within the Seismic Category I RXB.

The ECCS main valves are designed to withstand internal pressure of 2,100 psia, and external pressure as low as 0 psia and as high as 1,050~~1,000~~ psia. The design temperature of the main valves is 650 degrees F.

The pressure-retaining portions of the ECCS hydraulic actuator systems are designed to withstand internal pressure of 2,100 psia. The design temperature for pressure-retaining portions of the actuators is 650 degrees F.

The ECCS pilot valves are subject to the RP conditions externally and reactor pressure internally. The solenoid operators and position indication are provided with a bolted protective cover designed for submergence to ensure a dry environment for the electronics. The design temperature for the electronics is 250 degrees F. The external design pressure is 50 psia.

The ECCS components, including instrumentation, are environmentally qualified for the moisture, chemistry, and radioactivity of expected environments, including those resulting from loss-of-coolant accidents.

5.13.3 System Response to an Extended Loss of Alternating Current Power

Per baseline coping capability assumption number 1 of Section 4.2, the ECCS is assumed to survive the BDBEE and remain fully available during the period when the system functions necessary for FLEX strategy implementation are required.

As described in Section 5.7.3, the MPS detects the loss of AC power that occurs at event initiation, and, after a short time delay, starts the 24-hour ECCS timers. If plant conditions were to require an ECCS actuation within this 24-hour period, the ECCS valves would open as designed, but because this event does not include a loss-of-coolant accident, the ECCS valves remain closed during this period.

After 24 hours, the 24-hour timers expire and de-energize the ESFAS, which de-energizes the ECCS trip valve solenoids. Because the DHRS has been in operation for the previous 24 hours, RCS pressure is below the IAB pressure and the ECCS main valves open to establish system operation.

Table 6-2 NuScale Power Module safety logic with NRELAP5 signals in bold

{{

}}2(a),(c)

6.3.2.2 NRELAP5 Modeling

The NRELAP5 components used to model the MPS include variable and logical trips that are used to sense the MPS trip limits, apply signal delays and generate actuation signals. The MPS instrumentation and sensors are typically modelled by comparing the volume or junction parameter at the location of the sensor and comparing it to the associated analytical limit, rather than explicitly modeling the sensor.

The reactor trip system (RTS) logic is fairly simple, as each RTS signal is computed and compared against the trip setpoint on each timestep. The trips are organized together in a series of “or” logical trips. Should one trip limit be reached, the cascade of logical trips will immediately reach the final RTS logical trip, which then causes the RPS actuation signal to become true after a fixed delay that conservatively accounts for signal processing

and rod latch mechanism delays. Other subsystems such as containment isolation, DHRS actuation, ECCS actuation, etc. are modeled similarly.

{{

}}2(a),(c)

The pressurizer level signal is generated by modeling the collapsed liquid level, {{

}}2(a),(c)

The ECCS actuation logic includes the ability for the user to set additional electrical or mechanical conditions that are external to the NRELAP5 hydrodynamic model. {{

}}2(a),(c) The effects of external conditions can be added to any of the control system models as needed for a given transient scenario.

Enclosure 3:

Affidavit of Zackary W. Rad, AF-0119-64319

NuScale Power, LLC

AFFIDAVIT of Zackary W. Rad

I, Zackary W. Rad, state as follows:

1. I am the Director, Regulatory Affairs of NuScale Power, LLC (NuScale), and as such, I have been specifically delegated the function of reviewing the information described in this Affidavit that NuScale seeks to have withheld from public disclosure, and am authorized to apply for its withholding on behalf of NuScale.
2. I am knowledgeable of the criteria and procedures used by NuScale in designating information as a trade secret, privileged, or as confidential commercial or financial information. This request to withhold information from public disclosure is driven by one or more of the following:
   a. The information requested to be withheld reveals distinguishing aspects of a process (or component, structure, tool, method, etc.) whose use by NuScale competitors, without a license from NuScale, would constitute a competitive economic disadvantage to NuScale.
   b. The information requested to be withheld consists of supporting data, including test data, relative to a process (or component, structure, tool, method, etc.), and the application of the data secures a competitive economic advantage, as described more fully in paragraph 3 of this Affidavit.
   c. Use by a competitor of the information requested to be withheld would reduce the competitor's expenditure of resources, or improve its competitive position, in the design, manufacture, shipment, installation, assurance of quality, or licensing of a similar product.
   d. The information requested to be withheld reveals cost or price information, production capabilities, budget levels, or commercial strategies of NuScale.
   e. The information requested to be withheld consists of patentable ideas.
3. Public disclosure of the information sought to be withheld is likely to cause substantial harm to NuScale's competitive position and foreclose or reduce the availability of profit-making opportunities. The accompanying Request for Additional Information response reveals distinguishing aspects about the method by which NuScale develops its containment response analysis.

   NuScale has performed significant research and evaluation to develop a basis for this method and has invested significant resources, including the expenditure of a considerable sum of money.

   The precise financial value of the information is difficult to quantify, but it is a key element of the design basis for a NuScale plant and, therefore, has substantial value to NuScale.

   If the information were disclosed to the public, NuScale's competitors would have access to the information without purchasing the right to use it or having been required to undertake a similar expenditure of resources. Such disclosure would constitute a misappropriation of NuScale's intellectual property, and would deprive NuScale of the opportunity to exercise its competitive advantage to seek an adequate return on its investment.

4. The information sought to be withheld is in the enclosed response to NRC Request for Additional Information No. 466, eRAI No. 9482. The enclosure contains the designation "Proprietary" at the top of each page containing proprietary information. The information considered by NuScale to be proprietary is identified within double braces, "{{ }}" in the document.
5. The basis for proposing that the information be withheld is that NuScale treats the information as a trade secret, privileged, or as confidential commercial or financial information. NuScale relies upon the exemption from disclosure set forth in the Freedom of Information Act ("FOIA"), 5 USC § 552(b)(4), as well as exemptions applicable to the NRC under 10 CFR §§ 2.390(a)(4) and 9.17(a)(4).
6. Pursuant to the provisions set forth in 10 CFR § 2.390(b)(4), the following is provided for consideration by the Commission in determining whether the information sought to be withheld from public disclosure should be withheld:
   a. The information sought to be withheld is owned and has been held in confidence by NuScale.
   b. The information is of a sort customarily held in confidence by NuScale and, to the best of my knowledge and belief, consistently has been held in confidence by NuScale. The procedure for approval of external release of such information typically requires review by the staff manager, project manager, chief technology officer or other equivalent authority, or the manager of the cognizant marketing function (or his delegate), for technical content, competitive effect, and determination of the accuracy of the proprietary designation. Disclosures outside NuScale are limited to regulatory bodies, customers and potential customers and their agents, suppliers, licensees, and others with a legitimate need for the information, and then only in accordance with appropriate regulatory provisions or contractual agreements to maintain confidentiality.
   c. The information is being transmitted to and received by the NRC in confidence.
   d. No public disclosure of the information has been made, and it is not available in public sources. All disclosures to third parties, including any required transmittals to NRC, have been made, or must be made, pursuant to regulatory provisions or contractual agreements that provide for maintenance of the information in confidence.
   e. Public disclosure of the information is likely to cause substantial harm to the competitive position of NuScale, taking into account the value of the information to NuScale, the amount of effort and money expended by NuScale in developing the information, and the difficulty others would have in acquiring or duplicating the information. The information sought to be withheld is part of NuScale's technology that provides NuScale with a competitive advantage over other firms in the industry. NuScale has invested significant human and financial capital in developing this technology and NuScale believes it would be difficult for others to duplicate the technology without access to the information sought to be withheld.

I declare under penalty of perjury that the foregoing is true and correct. Executed on January 28, 2019.

Zackary W. Rad