**Kevin Cimorelli**
Site Vice President

**Susquehanna Nuclear, LLC**
769 Salem Boulevard
Berwick, PA 18603
Tel. 570.542.3795 Fax 570.542.1504
Kevin.Cimorelli@TalenEnergy.com

TALEN ENERGY

Attn: Document Control Desk
U. S. Nuclear Regulatory Commission
Washington, DC 20555-0001

10 CFR 50.90

JAN 0 9 2019

**SUSQUEHANNA STEAM ELECTRIC STATION**
**PROPOSED AMENDMENT TO LICENSES NPF-14 AND NPF-22: TEMPORARY CHANGE TO THE TECHNICAL SPECIFICATIONS TO ALLOW REPLACEMENT OF EMERGENCY SERVICE WATER SYSTEM PIPING**
**PLA-7751**

**Docket No. 50-387**
**and 50-388**

Pursuant to 10 CFR 50.90, Susquehanna Nuclear, LLC (Susquehanna) is submitting a request for an amendment to the Technical Specifications (TS) for the Susquehanna Steam Electric Station (SSES), Units 1 and 2, Facility Operating License numbers NPF-14 and NPF-22. The proposed amendment would allow temporary changes to TS 3.7.1, "Residual Heat Removal Service Water (RHRSW) System and the Ultimate Heat Sink (UHS)," and TS 3.7.2, "Emergency Service Water (ESW) System." Additionally, Susquehanna is proposing an administrative change to the TS Table of Contents (TOC).

The proposed amendment would permit one division of the ESW and RHRSW systems to be inoperable for a total of 14 days to address piping degradation. Replacement of Division 1 (supply and return) ESW piping is currently scheduled for the Unit 1 refueling outage in the Spring of 2020. Based on inspection results of the piping which is buried approximately 18 feet below grade outside the Unit 1 Reactor Building, Susquehanna will determine the appropriate scope for the other division and opposite unit pipe replacement. Susquehanna is requesting that the temporary extension expire on June 25, 2026, for Unit 2 and June 25, 2027, for Unit 1. This will allow time to review the initial inspection results and perform the necessary preparation activities for the potential future pipe replacements. This will also account for the divisional outages employed at SSES and the potential for increased scope during potential successive replacements.

The proposed amendment would also remove the TOC from the TS and place it under licensee control. The TOC is not being eliminated. Rather, following approval of the requested amendment, responsibility for maintenance and issuance of updates to the TS TOC will transfer from the NRC to Susquehanna. The TOC will be issued by Susquehanna in conjunction with the implementation of future NRC-approved TS amendments.

Enclosure 1 provides a description and assessment of the proposed changes along with Susquehanna's determination that the proposed changes do not involve a significant hazard consideration. Enclosure 2 provides the existing TS pages marked to show the proposed changes. Enclosure 3 provides revised (clean) TS pages for information only. Enclosure 4 provides existing TS Bases pages marked to show the proposed changes and are provided for information only. Enclosure 5 provides a list of regulatory commitments made in this submittal.

Susquehanna requests NRC approval of the proposed changes and issuance of the requested license amendment by February 28, 2020. Once approved, the amendment shall be implemented within 90 days.

In accordance with 10 CFR 50.91, Susquehanna is providing a copy of this application, with enclosures, to the designated Commonwealth of Pennsylvania state official.

Both the Plant Operations Review Committee and the Nuclear Safety Review Board have reviewed the proposed changes.

Should you have any questions regarding this submittal, please contact Mr. Jason Jennings, Manager – Nuclear Regulatory Affairs, at (570) 542-3155.

I declare under penalty of perjury that the foregoing is true and correct.

Executed on: 1/9/19

K. Cimorelli

Enclosures:

1. Description and Assessment
2. Marked-Up Technical Specification Pages
3. Revised (Clean) Technical Specification Pages
4. Marked-Up Technical Specification Bases Pages (For Information Only)
5. List of Regulatory Commitments

Copy: NRC Region I
Ms. L. H. Micewski, NRC Sr. Resident Inspector
Ms. T. E. Hood, NRC Project Manager
Mr. M. Shields, PA DEP/BRP

# Enclosure 1 to PLA-7751

# Description and Assessment


1. SUMMARY DESCRIPTION

2. DETAILED DESCRIPTION
   - 2.1 System Design and Operation
   - 2.2 Current Technical Specifications Requirements
   - 2.3 Reason for the Proposed Change
   - 2.4 Description of the Proposed Change

3. TECHNICAL EVALUATION
   - 3.1 Work Evolution and Potential Restoration Actions
   - 3.2 Impacts to Other Systems
   - 3.3 Compensatory Measures

4. REGULATORY EVALUATION
   - 4.1 Applicable Regulatory Requirements/Criteria
   - 4.2 Precedent
   - 4.3 No Significant Hazards Consideration Analysis
   - 4.4 Conclusions

5. ENVIRONMENTAL CONSIDERATION

6. REFERENCES

# SUSQUEHANNA ASSESSMENT

## 1. Summary Description

Pursuant to 10 CFR 50.90, Susquehanna Nuclear, LLC (Susquehanna) is submitting a request for an amendment to the Technical Specifications (TS) for the Susquehanna Steam Electric Station (SSES), Units 1 and 2, Facility Operating License (FOL) numbers NPF-14 and NPF-22. The proposed amendment would allow temporary changes to TS 3.7.1, "Residual Heat Removal Service Water (RHRSW) System and the Ultimate Heat Sink (UHS)," and TS 3.7.2, "Emergency Service Water (ESW) System." Additionally, Susquehanna is proposing an administrative change to the TS Table of Contents (TOC).

The proposed amendment would permit one division of the ESW and RHRSW systems to be inoperable for a total of 14 days to address piping degradation. Replacement of Division 1 (supply and return) ESW piping is currently scheduled for the Unit 1 refueling outage in the Spring of 2020. Based on inspection results of the piping which is buried approximately 18 feet below grade outside the Unit 1 Reactor Building, Susquehanna will determine the appropriate scope for the other division and opposite unit pipe replacement. Susquehanna is requesting that the temporary extension expire on June 25, 2026, for Unit 2 and June 25, 2027, for Unit 1. This will allow time to review the initial inspection results and perform the necessary preparation activities for the potential future pipe replacements. This will also account for the divisional outages employed at SSES and the potential for increased scope during potential successive replacements.

The proposed amendment would also remove the TOC from the TS and place it under licensee control. The TOC is not being eliminated. Rather, following approval of the requested amendment, responsibility for maintenance and issuance of updates to the TS TOC will transfer from the NRC to Susquehanna. The TOC will be issued by Susquehanna in conjunction with the implementation of future NRC-approved TS amendments.

## 2. Detailed Description

### 2.1 System Design and Operation

Residual Heat Removal Service Water System

As discussed in Section 9.2.6 of the Updated Final Safety Analysis Report (FSAR), the RHRSW system is designed to supply cooling water to the Residual Heat Removal (RHR) heat exchangers of both units. The RHRSW system is designed to take water from the spray pond (the UHS), pump it through the RHR heat exchangers, and return it to the spray pond via spray arrays or a spray array bypass line.

The RHRSW system consists of two RHRSW loops per unit. Each loop has a 100 percent capacity pump operating at 1180 rpm and a rated capacity of 9000 gpm. The Unit 1 A and Unit 2 A RHRSW pumps are cross connected so that they can supply cooling water to either the Unit 1 A or Unit 2 A RHRSW heat exchanger. The same is true for the Unit 1 B and Unit 2 B RHRSW pumps. The four RHRSW pumps are located in the Engineered Safeguard Service Water (ESSW) pumphouse at the edge of the spray pond. The RHR service water flows through the tube side of the RHR heat exchangers. All piping outside of the ESSW pumphouse, main plant, and spray pond is buried and it is coated and wrapped for corrosion protection. The RHRSW System is designed to provide a reliable source of cooling water for all operating modes of the RHR system including suppression pool cooling.

Emergency Service Water System

As discussed in Section 9.2.5 of the FSAR, the ESW system is designed to supply cooling water to the Diesel Generators (DGs), RHR pumps, and to those room coolers required during normal and emergency conditions necessary to safely shut down the plant. The ESW system is designed to take water from the spray pond (the UHS), pump it to the various heat exchangers, and return it to the spray pond via spray arrays or a spray array bypass line.

The ESW system is shared between the two units. It consists of two loops, each of which is designed to supply 100 percent of the ESW requirements to both units and the common DGs simultaneously. Each loop has two 50 percent capacity pumps operating at 1780 rpm and rated at 6000 gpm each. The four ESW pumps are located in the ESSW pumphouse at the edge of the spray pond. The emergency service water flows through the tube side of all heat exchangers. The loads of the ESW system are displayed in Tables 1 and 2 for Division 1 and 2, respectively. All ESW piping outside of the ESSW pumphouse, main plant, and spray pond is buried and is coated and wrapped for corrosion protection. During normal power generation, the ESW system is not operating, but is available for normal shutdown, emergencies, or to support testing and surveillances.

**Table 1** – Heat Loads on Division 1 of ESW

| **Unit 1 Equipment** | **Unit 2 Equipment** |
|---|---|
| A HPCI Room Cooler | A HPCI Room Cooler |
| A RCIC Room Cooler | A RCIC Room Cooler |
| A RHR Room Cooler | A RHR Room Cooler |
| A RHR Motor Oil Cooler | A RHR Motor Oil Cooler |
| D RHR Room Cooler | D RHR Room Cooler |
| D RHR Motor Oil Cooler | D RHR Motor Oil Cooler |
| C RHR Motor Oil Cooler (alternate) | C RHR Motor Oil Cooler (alternate) |
| A Core Spray Room Cooler | A Core Spray Room Cooler |
| C Core Spray Room Cooler | C Core Spray Room Cooler |
| A RBCCW (Non-Safety Related) | A RBCCW (Non-Safety Related) |
| A TBCCW (Non-Safety Related) | A TBCCW (Non-Safety Related) |
| A ESW Spent Fuel Pool Makeup | A ESW Spent Fuel Pool Makeup |
| | A Emergency Switchgear Direct Expansion Cooler |
| A ESW Supply to A – E DGs (Shared Equipment) | |
| A Control Structure Chiller (Shared Equipment) | |

**Table 2** – Heat Loads on Division 2 of ESW

| **Unit 1 Equipment** | **Unit 2 Equipment** |
|---|---|
| B HPCI Room Cooler | B HPCI Room Cooler |
| B RCIC Room Cooler | B RCIC Room Cooler |
| B RHR Room Cooler | B RHR Room Cooler |
| B RHR Motor Oil Cooler | B RHR Motor Oil Cooler |
| C RHR Room Cooler | C RHR Room Cooler |
| C RHR Motor Oil Cooler | C RHR Motor Oil Cooler |
| D RHR Motor Oil Cooler (alternate) | D RHR Motor Oil Cooler (alternate) |
| B Core Spray Room Cooler | B Core Spray Room Cooler |
| D Core Spray Room Cooler | D Core Spray Room Cooler |
| B RBCCW (Non-Safety Related) | B RBCCW (Non-Safety Related) |
| B TBCCW (Non-Safety Related) | B TBCCW (Non-Safety Related) |
| B ESW Spent Fuel Pool Makeup | B ESW Spent Fuel Pool Makeup |
| | B Emergency Switchgear Direct Expansion Cooler |
| B ESW Supply to A – E DGs (Shared Equipment) | |
| B Control Structure Chiller (Shared Equipment) | |

Interface Between RHRSW and ESW Systems

As can be seen from Figures 1 – 5, the return flow to the spray pond via spray arrays or a spray array bypass line of the same division of Unit 1 and 2 RHRSW and ESW is through a common line. Thus, when the ESW piping is physically breached, the same division Unit 1 and 2 RHRSW systems are inoperable. When the ESW pipe is breached, RHRSW return flow would simply exit through the ESW pipe breach and not be returned to the UHS via spray arrays or a spray array bypass line. Since each RHRSW/ESW division has its own separate return piping, the other RHRSW division is not affected by the breach.

**Figure 1** – Unit 1 'A' Loop Simplified Drawing ESW Breach

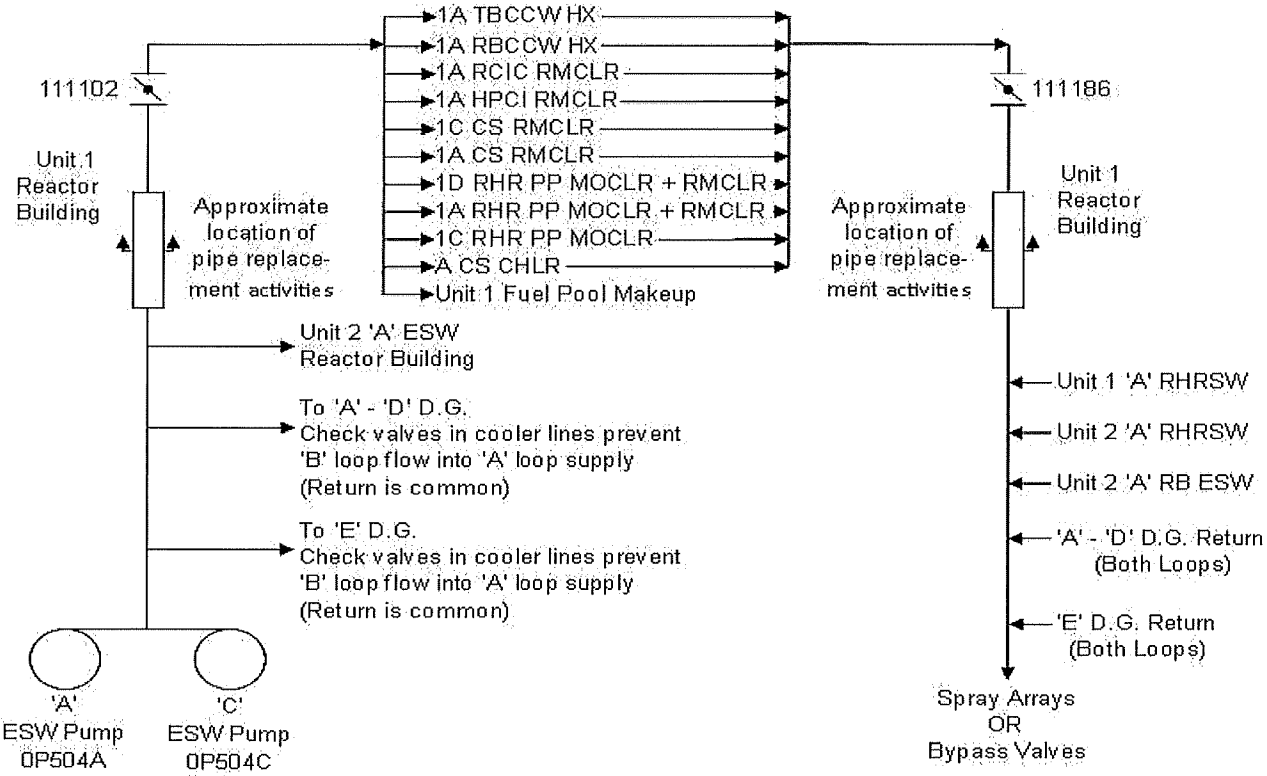

**Figure 2** – Unit 1 'B' Loop Simplified Drawing ESW Breach

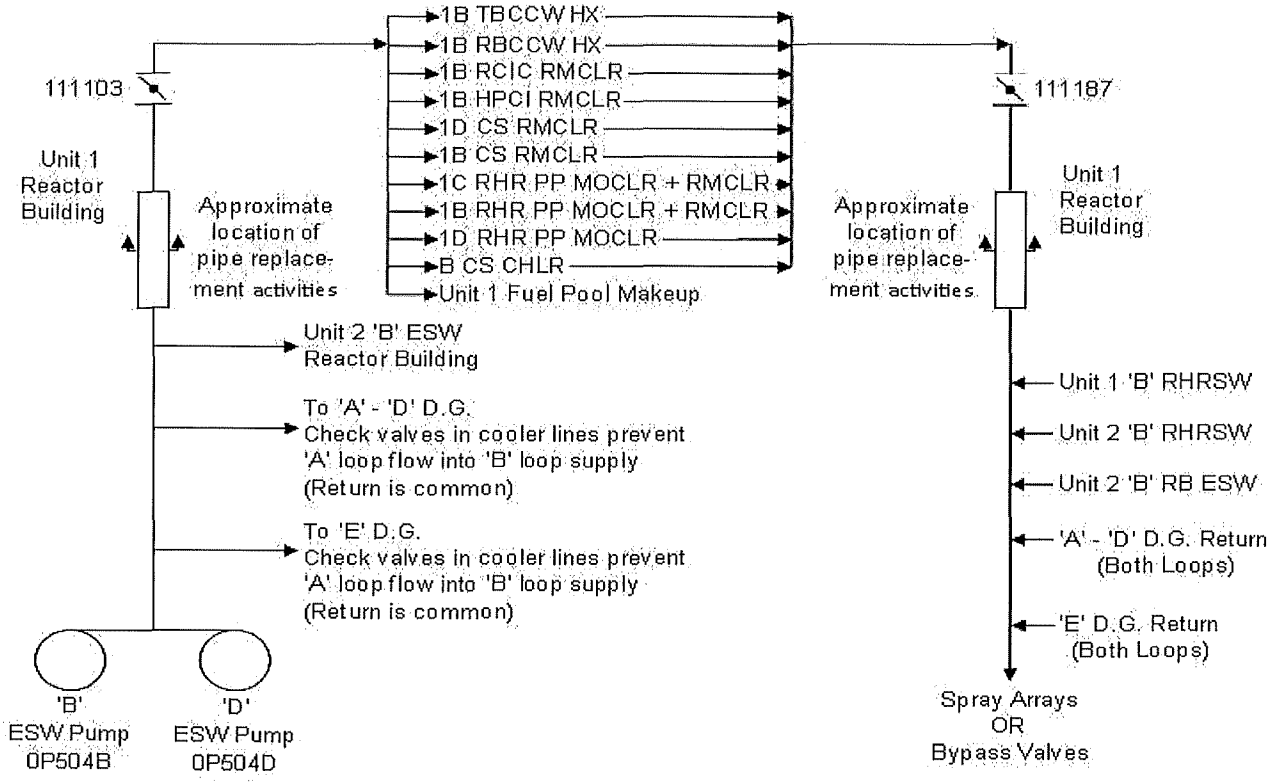


**Figure 3** – Unit 2 'A' Loop Simplified Drawing ESW Breach

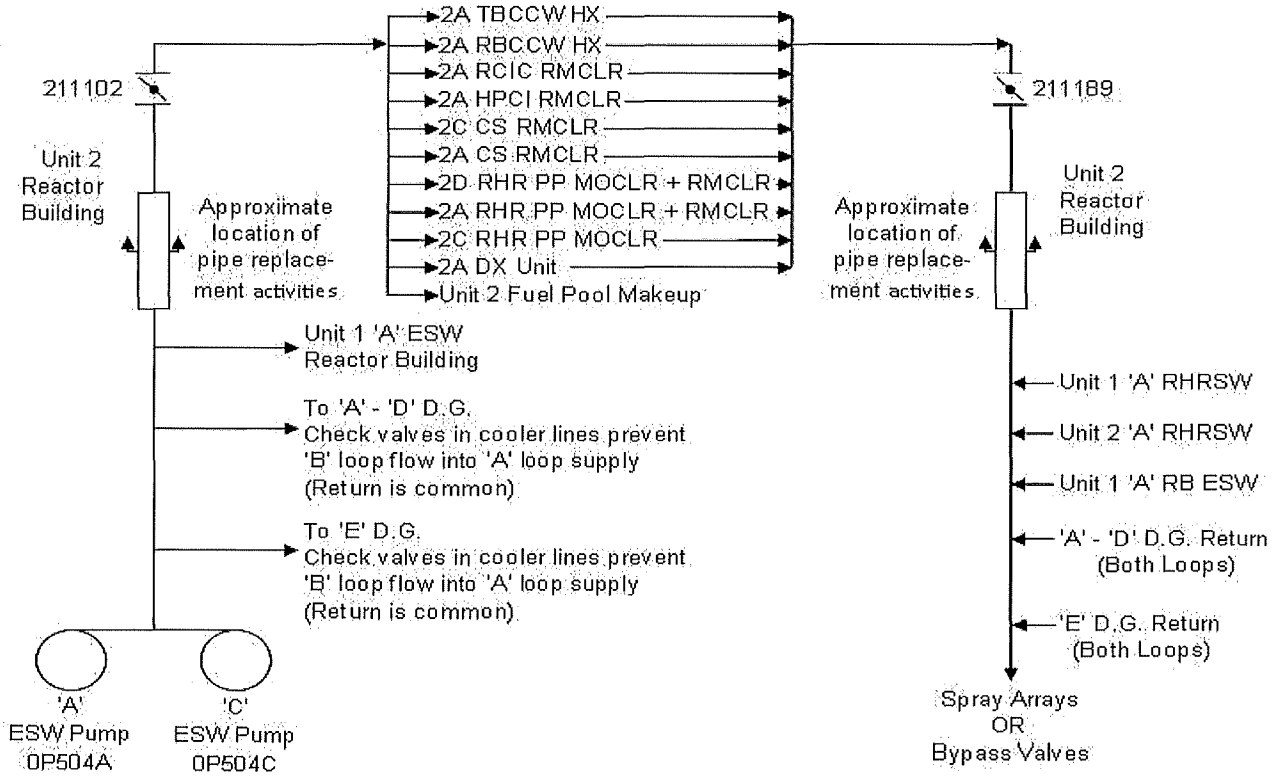

**Figure 4** – Unit 2 'B' Loop Simplified Drawing ESW Breach

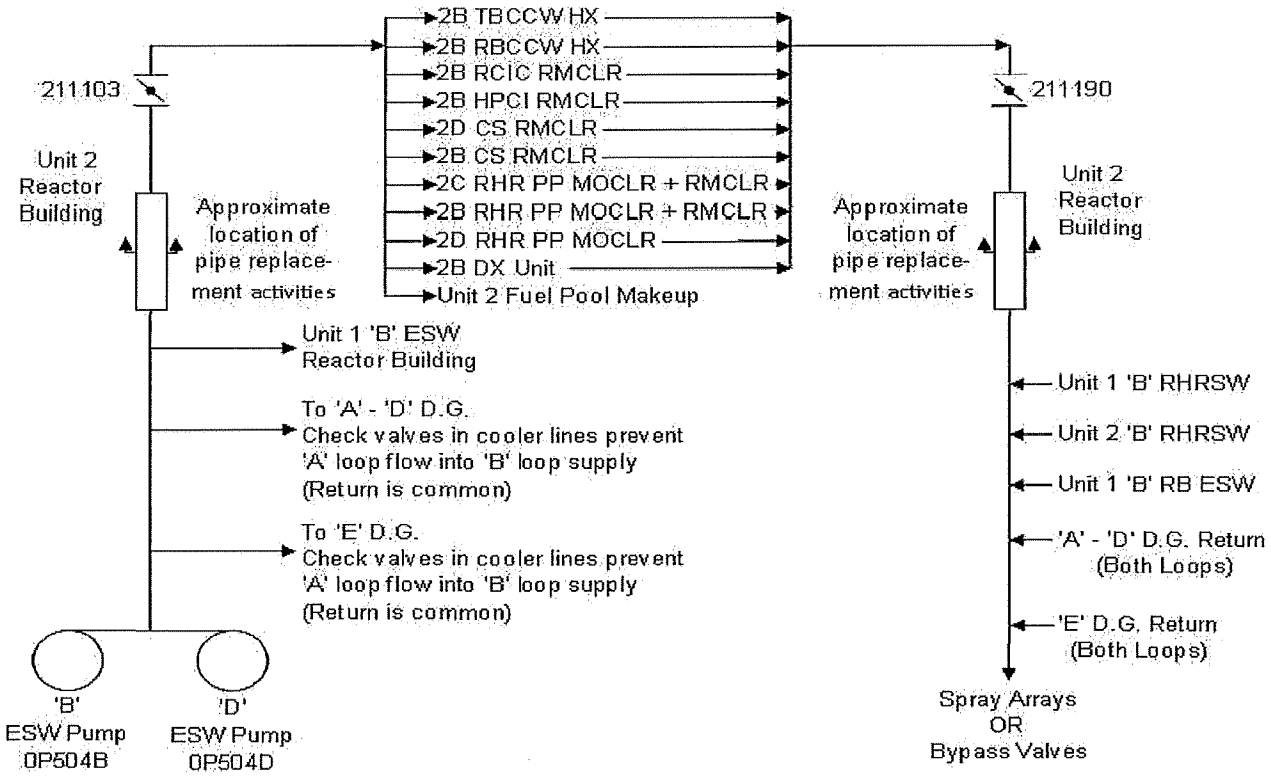

**Figure 5** – Unit 1 RHR Service Water System Simplified Diagram

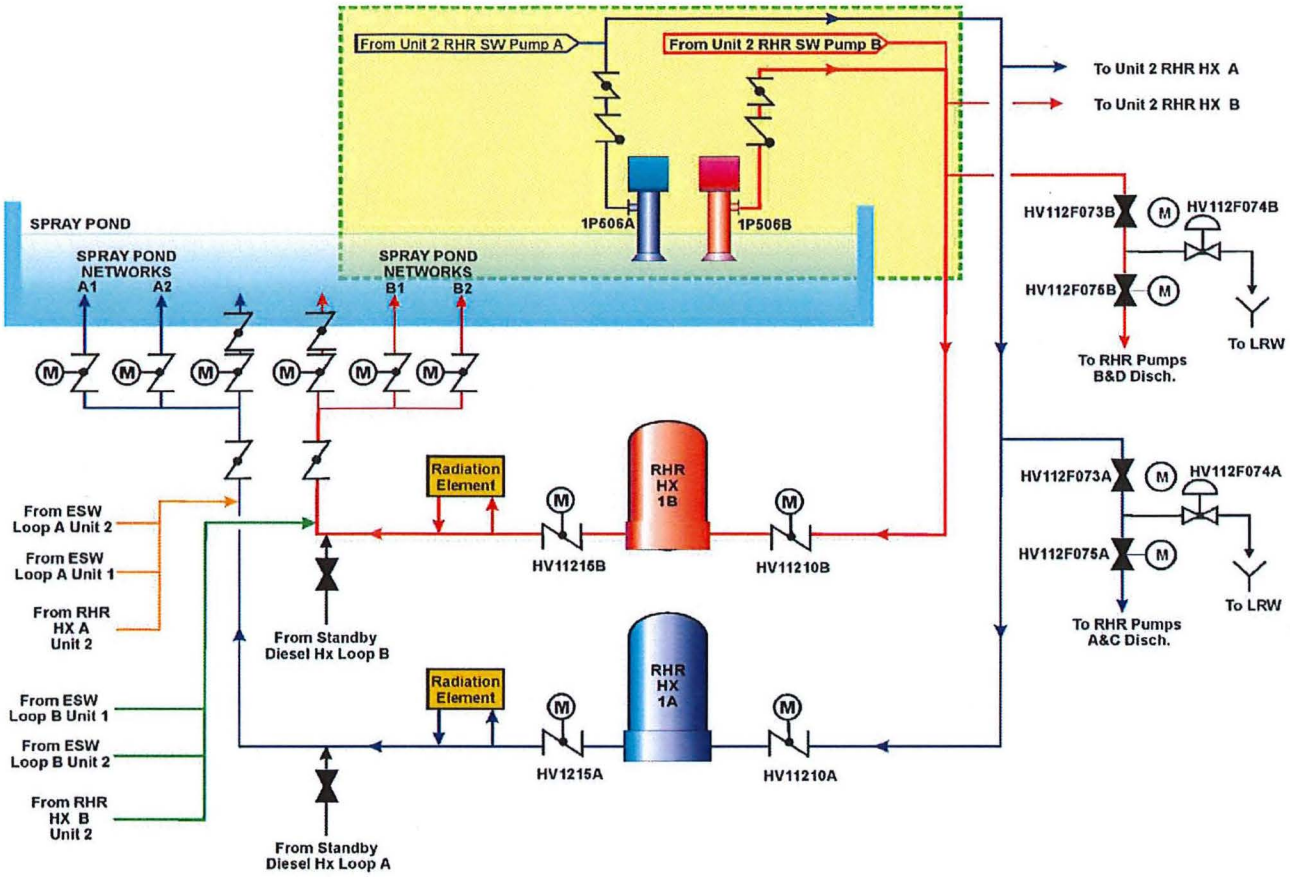


## 2.2 Current Technical Specifications Requirements

LCO 3.7.1

Limiting Condition for Operation (LCO) 3.7.1 requires, for each unit, that two RHRSW subsystems and the UHS be OPERABLE in MODES 1, 2, and 3. In the event that one RHRSW subsystem is inoperable, Required Action B.1 requires the inoperable RHRSW subsystem be restored to OPERABLE status within 72 hours from the discovery of an inoperable RHRSW subsystem on the opposite unit and 7 days if neither RHRSW subsystem is inoperable on the opposite unit. If the RHRSW subsystem cannot be restored to OPERABLE status, Required Actions D.1 and D.2 direct entry into MODE 3 within 12 hours and MODE 4 within 36 hours, respectively. LCO 3.7.1 is not applicable in MODE 4 or 5.

SSES Unit 2 TS Required Action 3.7.1.B.1 deviates from that of Unit 1. In Unit 2 Amendment 248 (Reference 1), the NRC approved a temporary change to Unit 2 TS 3.7.1 to increase the completion time from 72 hours to 7 days in order to accommodate 480 volt

engineered safeguard system load center transformer replacements on Unit 1. The existing allowance expires on June 15, 2020. The mitigating actions associated with the transformer replacement work do not conflict with any of the discussion in this document. The transformer replacement will occur on the same division as the ESW pipe replacement.

LCO 3.7.2

LCO 3.7.2 requires, for each unit, that two ESW subsystems be OPERABLE in MODES 1, 2, and 3. If an ESW subsystem is incapable of providing ESW flow to at least three DGs, Required Action B.1 requires that ESW flow be restored to at least three DGs within 7 days. If one ESW subsystem is inoperable, Required Action C.1 requires the inoperable ESW subsystem be restored to OPERABLE status within 7 days. If Required Actions B.1 or C.1 are not completed within 7 days, Required Actions D.1 and D.2 direct entry into MODE 3 within 12 hours and MODE 4 within 36 hours, respectively. LCO 3.7.2 is not applicable in MODE 4 or 5.

Table of Contents

Currently, the TOC are part of Appendix A to FOL numbers NPF-14 and NPF-22. Accordingly, the responsibility for maintaining and issuance of updates to the TS TOC currently resides with the NRC.

## 2.3 Reason for the Proposed Change

During the Unit 1 refueling outage in the Spring of 2020, Susquehanna intends to replace portions of Division 1 ESW piping at the Unit 1 Reactor Building wall penetration. During the replacement activities, Susquehanna will perform further inspections of the normally inaccessible piping. Based on the results of those inspections, Susquehanna will determine whether further piping replacement is required in the ESW system (i.e., both divisions, both units). Based on the transition to performing divisional outages at SSES, and allowing for additional scope increase following subsequent pipe inspections, Susquehanna expects that any necessary piping replacements would be complete within four refueling outages for each unit. Thus, Susquehanna is requesting that this temporary extension expire in 2026 for Unit 2 and 2027 for Unit 1.

Due to the fact that LCOs 3.7.1 and 3.7.2 will no longer be met during portions of the physical preparation for the ESW pipe replacement, the duration of the work will exceed the Completion Times of 72 hours and 7 days in LCOs 3.7.1 and 3.7.2, respectively. Susquehanna is requesting a temporary extension to the Completion Time of Required Actions in LCOs 3.7.1 and 3.7.2 to 14 days during replacement of the ESW piping on the opposite unit. LCOs 3.7.1 and 3.7.2 do not apply to the outage unit and, therefore, the proposed change is necessary to be able to perform the work with one unit in an outage and the other unit online.

Removal of the TS TOC will allow for Susquehanna to correct any identified editorial errors contained therein without NRC review and approval. Susquehanna will still implement the required TOC updates upon issuance of subsequent NRC-approved TS.

## 2.4 Description of the Proposed Change

A brief description of the associated proposed TS changes is provided. The specific wording changes to the TS are provided in Enclosures 2 and 3.

LCO 3.7.1

Susquehanna proposes a revision to the Completion Time for Required Action B.1 of LCO 3.7.1. Specifically, the existing Completion Time is amended to include an alternative Completion Time of 14 days during the replacement of ESW piping for the opposite unit. This new alternative is modified by a new footnote which identifies that the temporary extension is only applicable during the ESW piping replacement and will expire in 2026 for Unit 2 and 2027 for Unit 1.

Additionally, Susquehanna proposes rearranging the Completion Times for Required Action B.1 in Unit 2 LCO 3.7.1. This change will include moving the temporary 7 day Completion Time approved in Reference 1 to be the first Completion Time listed, followed by the temporary extension requested in this submittal, with the permanent Completion Times listed last. This will help clarify that both permanent Completion Times (i.e., 72 hours from the discovery of the associated Unit 1 RHRSW subsystem inoperable and 7 days) apply unless either of the temporary extensions are applicable. This clarification is further reiterated in the TS Bases.

LCO 3.7.2

Susquehanna proposes a revision to the Completion Time for Required Actions B.1 and C.1 of LCO 3.7.2. Specifically, the existing Completion Times are amended to include an alternative Completion Time of 14 days during the replacement of ESW piping for the opposite unit. This new alternative is modified by a new footnote which identifies that the temporary extension is only applicable during the ESW piping replacement and will expire in 2026 for Unit 2 and 2027 for Unit 1.

Table of Contents

Susquehanna proposes to remove the TOC from the TS and place it under Susquehanna (licensee) control. Note that no TS pages will be issued as a result of this proposed change.

## 3. Technical Evaluation

This section discusses the proposed changes in context with the plant configuration in which the changes will apply. Specifically, the changes are only applicable when one unit is in MODE 4 or 5 (the "outage unit") and the other unit is assumed to be in MODE 1 (the "online unit"). Additionally, the increased Completion Times are only applicable to the Unit 1 and 2 ESW piping replacement activities.

### 3.1 Work Evolution and Potential Restoration Actions

During the ESW pipe replacement, the ability to recover the ESW and RHRSW systems changes throughout the pipe replacement but at no point does it exceed the existing Completion Times in LCOs 3.7.1 and 3.7.2. To maximize the availability of ESW and RHRSW during the ESW pipe replacement timeframe, the following mitigating actions will be implemented. Note these actions correspond to the different stages of ESW pipe replacement but in no circumstance will recovery of the affected division for the online unit to a functional (not OPERABLE) status be expected to take longer than the current LCO Completion Times. Note that one OPERABLE RHR, RHRSW, and ESW division can safely shutdown the online unit under all accident scenarios.

Susquehanna is requesting that the Completion Times for Required Actions in LCOs 3.7.1 and 3.7.2 for the online unit be extended from their current values (72 hours and 7 days, respectively) to 14 days to allow for ESW pipe replacement. As described below, the total estimated time to complete the repair evolution for each pipe segment is only 11 days. Susquehanna is requesting 3 days more than the estimated work duration as a contingency to account for any unknown repair scope.

The work to replace the different sections of ESW piping will follow the same basic evolution and can be broken into five major steps. Each of the five steps are described below, including the restoration activities that could be performed to restore the RHRSW and ESW systems to service in the event of an accident. The work/recovery strategy described in this section was chosen such that it balanced the availability of plant systems during the pipe replacement with the overall time that RHRSW and ESW would be out of service. Consideration was given to other potential mitigating measures (e.g., installation of inflatable plugs); however, due to the proximity and configuration in the work location, the plan discussed below was determined to be the most effective and feasible for quick recovery of the system if needed. The times given provide estimates for the work on both the supply and return lines in parallel.

1. Preparation

   Preparation activities will include exposing the ESW piping via excavation and draining all RHRSW and ESW piping in the division which will be replaced. Note that during these

preparation activities, RHRSW and ESW will be declared inoperable when the ESW system is no longer qualified to perform its function. These preparation activities are expected to take approximately 24 hours to complete. Due to the depth of the piping below grade, major excavation activities will be completed prior to declaring the RHRSW and ESW systems inoperable; this work will be completed early to limit the overall time impact to the refueling outages. However, Susquehanna will ensure the ESW piping meets all design requirements until commencement of the evolution to replace the piping.

During the preparation activities, the affected RHRSW and ESW divisions are intact and the systems could be filled and operated in the event of an accident on the online unit. This restoration evolution is expected to take approximately 6 hours which is less than the existing Completion Times in LCOs 3.7.1 and 3.7.2 to restore RHRSW and ESW to OPERABLE status. While RHRSW and ESW would not be restored to OPERABLE status, this would allow the affected RHRSW and ESW pipe division to be functional and provide cooling to the necessary loads.

2. Pipe Cutting

Once preparation activities are complete, the ESW supply and return piping will be cut and the flanges broken. However, piping will not yet be removed. Performing the necessary pipe cuts and breaking the necessary flanges is expected to take approximately 24 hours to complete.

At this point, the affected RHRSW and ESW divisions are no longer intact. Restoration activities, in the event of an accident on the online unit, would require welding the cut piping and restoring the flanges to return the ESW piping to functional status. Welding and flange restoration is expected to take 24 hours. Upon pipe welding and flange restoration, the affected RHRSW and ESW divisions can then be filled and vented in an additional 6 hours. The restoration activities do not perform actions required to restore ESW and RHRSW systems to OPERABLE status (e.g., quality assurance checks).

3. Pipe Removal

Following cutting and flange breaking, the ESW supply and return piping will be removed. This evolution is expected to require approximately 24 hours to complete.

Susquehanna will have steel plates staged and ready to be welded to the cut ends of the piping to be able to restore RHRSW and ESW to a functional status in the event of an accident on the online unit. The evolution to weld the steel plates is expected to take 24 hours. Upon completion of the welding, the affected RHRSW and ESW divisions can then be filled and vented in an additional 6 hours. The 30 hours of total restoration time to return the piping to a functional status is less than the Completion Times in LCOs 3.7.1 and

3.7.2. One notable exception is made concerning pipe functionality during the restoration phase. The affected ESW division will not be able to supply flow to the outage unit ESW loads that are fed from the piping entering the outage unit's reactor building (see Figures 1-4). Once restoration activities are complete, flow can be provided to all other ESW and RHRSW loads in the affected division including the DGs and the online unit's RHRSW system (further discussed in Section 3.2).

4. Replacement Pipe Welding and Flange Restoration

   Once the existing ESW piping is removed, the replacement pipe segment will be added to the piping and welding will commence. Additionally, the flanges will be restored. This evolution is expected to require approximately 3 days to complete.

   In the event of an accident on the online unit during this stage, the restoration activities are equivalent to that of stage 2; i.e., the welding of the replacement pipe section would be completed and the RHRSW and ESW systems would be filled and vented. The total restoration evolution would still be expected to take 30 hours; this is less than the Completion Times in LCOs 3.7.1 and 3.7.2. The 30 hours of total restoration time to return the piping to a functional status is less than the Completion Times in LCOs 3.7.1 and 3.7.2.

5. System Restoration

   Upon completion of welding and flange restoration, the remaining activities are hanger and seismic restraint restoration, leak checks, post maintenance testing, pipe coating and wrapping, and backfilling the excavated piping. Upon meeting all requirements, the RHRSW and ESW systems will be declared OPERABLE. System restoration is expected to require approximately 5 days to complete.

   In the event of an accident on the online unit during this stage, the restoration activities would be the same as in stage 1. During the restoration from this stage, the ESW piping is intact and could be filled and vented within 6 hours, thereby restoring RHRSW and ESW to a functional status. This is less than the Completion Times in LCOs 3.7.1 and 3.7.2.

Any welding performed in the event of an emergency to recover the system would be to maintain the piping watertight and will not necessarily meet design or code requirements. The mitigating actions discussed above provide adequate assurance that the system can be recovered to a functional status within the current LCO time from the time of an initiating event.

During the evolution, the operating unit's Core Spray and RHR systems will be maintained available except the room coolers fed from the affected ESW system. The redundant division of ESW and RHRSW will not be impacted and these systems will remain OPERABLE throughout the evolution. This will include normal and emergency power supplies.

It should be noted that the work evolution will not impact the primary containment for the online or outage unit. The work evolution will not impact the secondary containment for the online unit. Secondary containment will be relaxed for the outage unit. Throughout the pipe replacement evolution, Susquehanna will be capable of taking actions to restore secondary containment to OPERABLE status for the outage unit within the Completion Times specified in LCO 3.5.2, "Reactor Pressure Vessel (RPV) Water Inventory Control."

## 3.2 Impacts to Other Systems

When the restoration process does not install steel plates on the impacted ESW piping, the ESW system will be able to provide flow to all users once restoration is complete. This will be accomplished in approximately 6 hours when the system has not been breached and 30 hours when the system has been breached but steel plates are not required.

When the restoration requires steel plates to be installed on the affected division, there will be no ESW flow to the outage unit's reactor building divisional loads (see Figures 1-4). The impact of each user is discussed in detail for this limiting situation.

Diesel Generators

SSES is equipped with five DGs (A-E), which are common to the two units. DGs A-D are normally aligned to the safety-related load groups and provide emergency AC power in the event of an accident. DG E is capable of being substituted for any of the DGs A-D without violating the independence of the redundant safety-load groups. When a DG is aligned, it is connected to the 4.16 kV bus of the assigned load group on each unit.

The RHRSW system does not provide cooling for the DGs. The ESW system provides the cooling water for the four DGs aligned to provide emergency power (see Figures 1-4). The ESW system provides two 100 percent capacity cooling water inlets (one from each ESW loop) for each of the four aligned DGs.

LCO 3.7.2 is modified by a note which directs entry into the Conditions and Required Actions of LCO 3.8.1 for a DG made inoperable by the ESW System. In accordance with LCO 3.8.1, four DGs are required to be OPERABLE in MODES 1, 2, and 3. Additionally, LCO 3.8.2 requires two DGs to be OPERABLE in MODES 4 and 5. During the evolution to replace the ESW piping, only one train of ESW will be removed from service at a time; i.e., the other division of ESW, which is capable of providing 100 percent of the necessary cooling for all four aligned DGs, will still be OPERABLE and can provide cooling to the required DGs. Therefore, the ESW pipe replacement activities will have no impact on DG OPERABILITY for either the outage or online units. Furthermore, as discussed in Section 3.1, restoration of the ESW division being replaced is never expected to take longer than the Completion Time allotted in LCO 3.7.2.

While the restoration efforts may not return the ESW division to OPERABLE status, they will allow for an additional cooling source to be established for the DGs in the event of an emergency.

High Pressure Coolant Injection

The High Pressure Coolant Injection (HPCI) system is provided to ensure that the reactor core is adequately cooled to meet the design basis in the event of a small break in the reactor coolant pressure boundary and loss of coolant that does not result in a rapid depressurization of the reactor vessel. This permits the plant to be shut down while maintaining sufficient reactor vessel water inventory until the reactor vessel is depressurized. The HPCI system is designed to pump water into the reactor vessel for a wide range of pressures in the reactor vessel. Normally, HPCI is aligned to take suction from the non safety-related Condensate Storage Tank (CST), but can be transferred to take suction from the safety-related suppression pool. Water from either source is pumped into the reactor vessel through the feedwater spargers.

The RHRSW system does not provide cooling for HPCI. The ESW system provides the cooling water for the HPCI room coolers. The ESW system provides one cooling water inlet to each of the HPCI room coolers (Division 1 of ESW provides cooling water to the A HPCI room cooler for each unit; Division 2 of ESW provides cooling to the B room cooler). Each HPCI room cooler is capable of removing 100 percent of all heat loads. In accordance with LCO 3.5.1, HPCI is required to be OPERABLE in MODES 1, 2, and 3 with reactor steam dome pressure greater than 150 psig. There are no OPERABILITY requirements for HPCI in MODES 4 and 5. Non-functional HPCI room coolers would render HPCI inoperable. However, LCO 3.0.6 does not require entering the Conditions and performing the Required Actions of LCO 3.5.1 so long as the inoperable ESW subsystem is the only reason that HPCI is inoperable. Thus, the online unit would not require performance of the Required Actions when HPCI is inoperable. Therefore, the ESW pipe replacement will have no TS impact on HPCI for either the online or outage unit.

During the evolution to replace the ESW piping, only one train of ESW will be removed from service at a time; i.e., the other division of ESW will still be OPERABLE and can provide cooling water to a HPCI room cooler. Thus, the expected heat load would still be able to be removed from the HPCI room in the event of an accident during the ESW pipe replacement activities. Furthermore, as discussed in Section 3.1, restoration of the ESW division being replaced is never expected to take longer than the Completion Time allotted in LCO 3.7.2. While the restoration efforts may not return the ESW division to OPERABLE status, they will allow for an additional cooling source to be established for the HPCI room in the online unit in the event of an emergency.

Reactor Core Isolation Cooling

The Reactor Core Isolation Cooling (RCIC) system is provided to ensure that the reactor core is adequately cooled in the event that (1) the vessel becomes isolated and maintained in MODE 3, (2) the vessel becomes isolated and there is a loss of coolant from the feedwater system, or (3) a reactor shutdown is initiated without normal feedwater before the pressure is low enough to initiate the normal shutdown cooling system. This permits the plant to be shut down while maintaining sufficient reactor vessel water inventory until the reactor vessel is depressurized. The RCIC system is functionally redundant to the HPCI system, however it is not considered to be part of the Emergency Core Cooling Systems. Normally, RCIC is aligned to take suction from the non safety-related CST, but can be transferred to take suction from the safety-related suppression pool. Water from either source is pumped into the reactor vessel through the feedwater spargers.

The RHRSW system does not provide cooling for RCIC. The ESW system provides the cooling water for the RCIC room coolers (see Figures 1-4). The ESW system provides one cooling water inlet to each of the RCIC room coolers (Division 1 of ESW provides cooling water to the A RCIC room cooler for each unit; Division 2 of ESW supplies the B room coolers). Each RCIC room cooler is capable of removing 100 percent of all heat loads. In accordance with LCO 3.5.3, RCIC is required to be OPERABLE in MODES 1, 2, and 3 with reactor steam dome pressure greater than 150 psig. There are no OPERABILITY requirements for RCIC in MODES 4 and 5. Non-functional RCIC room coolers would render RCIC inoperable. However, LCO 3.0.6 does not require entering the Conditions and performing the Required Actions of LCO 3.5.3 so long as the inoperable ESW subsystem is the only reason that RCIC is inoperable. Thus, the online unit would not require performance of the Required Actions when RCIC is inoperable. Therefore, the ESW pipe replacement will have no TS impacts on RCIC for either the online or outage unit.

During the evolution to replace the ESW piping, only one train of ESW will be removed from service at a time; i.e., the other division of ESW will still be OPERABLE and can provide cooling water to a RCIC room cooler. Thus, the expected heat load would still be able to be removed from the RCIC room in the event of an accident during the ESW pipe replacement activities. Furthermore, as discussed in Section 3.1, restoration of the ESW division being replaced is never expected to take longer than the Completion Time allotted in LCO 3.7.2. While the restoration efforts may not return the ESW division to OPERABLE status, they will allow for an additional cooling source to be established for the RCIC room in the online unit in the event of an emergency.

Core Spray

The Core Spray system provides inventory makeup and spray cooling during large breaks in which the core is calculated to uncover. It consists of two 100 percent capacity loops. Each of

the two redundant core spray systems takes suction from the suppression pool and provides cooling water into the top of the fuel assemblies to cool the core.

The RHRSW system does not provide cooling for the Core Spray system. The ESW system provides the cooling water for the Core Spray system room coolers (see Figures 1-4). The ESW system provides one cooling water inlet to each of the Core Spray room coolers (Division 1 of ESW provides cooling water to the A and C Core Spray room coolers for each unit; Division 2 of ESW supplies the B and D room coolers). The Core Spray pump rooms are designed such that the same division Core Spray Pumps are in the same room, with the corresponding room coolers providing the cooling. One room cooler is required to remove the heat load associated with one Core Spray pump. In accordance with LCO 3.5.1, two Core Spray subsystems are required to be OPERABLE in MODES 1, 2, and 3. Additionally, in accordance with LCO 3.5.2, one low pressure ECCS injection/spray subsystem (Core Spray or Low Pressure Coolant Injection) is required to be OPERABLE in MODES 4 and 5. Non-functional room coolers would render the Core Spray subsystem inoperable. However, LCO 3.0.6 does not require entering the Conditions and performing the Required Actions of LCO 3.5.1 so long as the inoperable ESW subsystem is the only reason that Core Spray is inoperable. Thus, the ESW pipe replacement work will have no TS impacts on the Core Spray system for either the online or outage unit.

During the evolution to replace the ESW piping, only one train of ESW will be removed from service at a time; i.e., the other division of ESW will still be OPERABLE and can provide cooling water to its two corresponding Core Spray pump room coolers. Thus, only one subsystem of Core Spray would be impacted by the ESW work and LCO 3.5.2 will be met for the outage unit. Additionally, the expected heat load would still be able to be removed from the Core Spray pump rooms in the non-impacted division in the event of an accident during the ESW pipe replacement activities. Furthermore, as discussed in Section 3.1, restoration of the ESW division being replaced is never expected to take longer than the Completion Time allotted in LCO 3.7.2. While the restoration efforts may not return the ESW division to OPERABLE status, they will allow for a cooling water source to be established to the impacted division Core Spray room coolers in the online unit to support operation of the Core Spray pumps, if desired.

Residual Heat Removal

The RHR system is designed to remove decay heat from the reactor, suppression pool, or spent fuel pool. It is comprised of two independent loops. Each loop contains two motor-driven pumps, a heat exchanger, piping, valves, instrumentation, and controls. The RHR system has five operational modes: (1) Shutdown Cooling, (2) Low Pressure Coolant Injection, (3) Suppression Pool Cooling, (4) Containment Spray, and (5) Spent Fuel Pool Cooling. Depending upon its operational mode, RHR can take suction from the suppression pool, a reactor recirculation loop pipe (shutdown cooling mode), or the spent fuel pool (spent fuel pool cooling mode) and can discharge into the reactor vessel, suppression pool, spent fuel pool, or the

wetwell or drywell spray spargers. The RHR heat exchangers are sized on the basis of the duty for the shutdown cooling mode.

The RHRSW system provides cooling water to the RHR heat exchangers (as shown in Figure 5, Division 1 of RHRSW provides the cooling water to the A RHR Heat Exchanger for that unit; Division 2 of RHRSW supplies cooling water to the B RHR Heat Exchangers). The ESW system provides cooling water to the RHR room coolers and to the RHR pump motor oil coolers (see Figures 1-4). The ESW system provides one cooling water inlet to each of the RHR room coolers (Division 1 of ESW provides cooling water to the A and D RHR Room Coolers; Division 2 provides cooling water to the B and C Room Coolers). Additionally, the ESW system provides one inlet to A and B RHR pump motor oil coolers and two inlets to the C and D (Division 1 of ESW provides the primary cooling water source to the A and D RHR pump motor oil coolers and a backup source, controlled by an automatic valve, to the C RHR pump motor oil cooler; Division 2 of ESW provides the primary cooling water source to the B and C coolers and an automatic backup to the D cooler).

In accordance with LCOs 3.4.8, 3.5.1, 3.6.2.3, and 3.6.2.4, two RHR subsystems are required to be OPERABLE in MODES 1, 2, and 3. Furthermore, LCOs 3.4.9, 3.5.2, 3.9.7, and 3.9.8 require that at least one and sometimes two RHR subsystems be OPERABLE (the requirements vary by LCO and plant conditions) in MODES 4 and 5. Without RHRSW and ESW, the required cooling for the RHR heat exchangers, room coolers, and pump motor coolers is not available and the RHR system would be rendered inoperable. However, LCO 3.0.6 does not require entering the Conditions and performing the Required Actions of the applicable LCOs so long as the inoperable RHRSW or ESW subsystems are the reason that RHR is inoperable (LCO 3.0.6 does not apply with respect to LCO 3.4.8 and is discussed below). Thus, the ESW pipe replacement will have no TS impacts on RHR for either the online or outage unit.

During the evolution to replace the ESW piping, only one train of RHRSW and ESW will be removed from service at a time; i.e., the other division will still be OPERABLE and can provide cooling water to their corresponding heat exchangers, room coolers, or pump motor oil coolers. SSES is configured such that the A and C RHR pumps are in one room and are cooled by the A and C room coolers (each room cooler has 100 percent heat removal capacity for one RHR pump). Similarly, the B and D RHR pumps are in another room and cooled by the B and D room coolers. Based on the physical layout of the plant and the configuration of the ESW system, a division of RHRSW and ESW can support operation of the same division of RHR on both units simultaneously. The expected heat load would still be able to be removed in the non-impacted division in the event of an accident during the ESW pipe replacement activities. Furthermore, as discussed in Section 3.1, restoration of the ESW division being replaced is never expected to take longer than the Completion Time allotted in LCO 3.7.2. While the restoration efforts may not return the ESW and RHRSW subsystems to OPERABLE status, they will allow for a cooling water source to be established to the impacted division RHR heat exchanger to support operation of both divisions of RHR for the online unit.

LCO 3.7.1 is modified by a note which directs entry into the Conditions and Required Actions of LCO 3.4.8, "Residual Heat Removal (RHR) Shutdown Cooling System – Hot Shutdown," for RHR shutdown cooling made inoperable by the RHRSW System. LCO 3.4.8 is applicable in MODE 3 with reactor steam dome pressure less than the RHR cut in permissive pressure. During the evolution to replace the ESW piping, neither the online nor the outage unit is planned to be in MODE 3. Thus, LCO 3.4.8 is not planned to be applicable at any time during the evolution.

However, in the event that the online unit experiences an unexpected trip during the ESW pipe replacement, LCO 3.4.8 will be applicable. LCO 3.4.8 requires that two RHR shutdown cooling subsystems be OPERABLE. During the ESW pipe replacement evolution, one division of RHRSW and ESW will be inoperable, thereby rendering one subsystem of RHR shutdown cooling inoperable for the recently tripped (originally online) unit. In this situation, the TS requires performance of three actions: (1) Initiate action to restore RHR shutdown cooling subsystem to OPERABLE status immediately; (2) Verify an alternate method of decay heat removal is available for each inoperable RHR shutdown cooling subsystem within one hour; and (3) Be in MODE 4 in 24 hours. Susquehanna will be able to perform actions 1 and 3, but the alternate method of decay heat removal at SSES ultimately relies upon the same division of RHR that is inoperable due to the lack of RHRSW and ESW. Failure to perform action 2 would require entry into LCO 3.0.3, which requires exiting the MODE of applicability. Susquehanna would be attempting to take the recently tripped unit to MODE 4 where only one subsystem of RHR shutdown cooling is required to be OPERABLE and, therefore, would be complying with the SSES TS.

In this scenario, Susquehanna will still be able to provide the required cooling to both units. For example, assume the Unit 1, Division 1 ESW pipe is being replaced. Unit 1, Division 1 of RHRSW and Division 1 of ESW are both inoperable, and the subsystems supported by those subsystems would be unavailable. Unit 1 is in MODE 5, with Division 2 of RHR providing shutdown cooling. Unit 2 is the online unit and trips from MODE 1. The equipment with available ESW flow is given in Table 3 (Note that the C RHR pump discharges through the A RHR heat exchanger which is unavailable due to inoperable Division 1 of RHRSW). Shutdown cooling can be provided to Unit 1 via the B RHR pump with room cooling provided by the B RHR pump room cooler. Shutdown cooling can be provided to Unit 2 via the D RHR pump with room cooling provided by the B RHR pump room cooler (the B and D RHR pumps are in the same room and each room cooler can remove the heat load generated by either pump). Despite the fact that only one division of RHR would be available for each unit, Susquehanna would retain the ability to reach safe shutdown on Unit 2 and maintain Unit 1 in a safe shutdown condition.

**Table 3** – Equipment with Available ESW Flow During Postulated Accident

| Unit 1 | Unit 2 |
|---|---|
| B RHR Room Cooler | B RHR Room Cooler |
| B RHR Motor Oil Cooler | B RHR Motor Oil Cooler |
| C RHR Room Cooler | C RHR Room Cooler |
| C RHR Motor Oil Cooler* | C RHR Motor Oil Cooler* |
| D RHR Motor Oil Cooler | D RHR Motor Oil Cooler |

* The RHR Heat Exchanger through which the C RHR Pumps discharge does not have RHRSW flow and, therefore, does not provide cooling.

Control Structure Chilled Water System

The Control Structure Chilled Water system is designed to supply chilled water at 44°F to the control room floor cooling system, Unit 1 emergency switchgear cooler, computer room floor cooling system, and the control structure H&V system. These systems maintain design air temperatures inside the control structure during all modes of plant operation. The system is common to both units. The system consists of two identical 100 percent capacity chilled water trains. Each train consists of a centrifugal chiller, pumps, cooling coils, tanks, valves, instrumentation and control. Heat from the cooling coils is transferred to the chiller by the circulating chilled water. The heat gained is removed from the chilled water in the evaporator by a flow of refrigerant, which in turn is cooled by the condenser cooling water. During normal plant operations, the source of condenser cooling water is the non-safety related service water system.

The RHRSW system does not provide cooling for the control structure chilled water system. The ESW system provides cooling water for the control structure chilled water system in the event of an emergency and can provide emergency makeup to the chilled water circulation system (see Figures 1-2). The ESW system provides one cooling water inlet to each of the control structure chiller condensers via the Unit 1 ESW reactor building connection (Division 1 of ESW provides cooling water to the A Control Structure Chiller; Division 2 of ESW cools the B chiller). In accordance with LCO 3.7.4, both control structure chillers are required to be OPERABLE in MODES 1, 2, and 3. Further, both control structure chillers are required to be OPERABLE during movement of irradiated fuel assemblies in the secondary containment for the outage unit. Inoperable control structure chiller condensers would render the control structure chillers inoperable. However, LCO 3.0.6 does not require entering the Conditions and performing the Required Actions of LCO 3.7.4 so long as the inoperable ESW subsystem is the only reason that the control structure chiller is inoperable. Thus, neither unit would require performance of the Required Actions when the control structure chilled water system is inoperable. Therefore, the ESW pipe replacement will have no TS impacts on the control structure chilled water system for either the online or outage unit.

During the evolution to replace the ESW piping, the service water system will not be impacted and will continue to provide the normal supply of cooling water to the control structure chiller condensers. Additionally, only one train of ESW will be removed from service at a time; i.e., the other division of ESW will still be OPERABLE and is still available to be the emergency cooling water source to a control structure chiller. Thus, the expected heat load would still be able to be removed from the control structure in the event of an accident during the ESW pipe replacement activities which resulted in a loss of the service water system. Furthermore, as discussed in Section 3.1, restoration of the ESW division being replaced is never expected to take longer than the Completion Time allotted in LCOs 3.7.2 and 3.7.4. While the restoration efforts may not return the ESW division to OPERABLE status, they will allow for a backup cooling source to be established for the impacted control structure chiller during ESW pipe replacement at the Unit 2 Reactor Building penetration.

Unit 2 Emergency Switchgear Direct Expansion Cooler

Two 100 percent capacity cooling units are provided for the emergency switchgear and load center rooms. Each unit consists of a cabinet with prefilters, emergency cooling coil, a reactor building chilled water cooling coil, and a belt driven centrifugal fan. In Unit 1, the emergency cooling coil is fed from the control structure chilled water system. In Unit 2, the emergency cooling coil is fed from a Direct Expansion (DX) cooler. During normal operations, the reactor building chilled water cooling coil provides the cooling source.

The RHRSW system does not provide cooling for the emergency switchgear and load center room coolers. The ESW system provides cooling water for the emergency switchgear and load center rooms in the event of an emergency (see Figures 3-4). The ESW system provides one cooling water inlet to each of the Unit 2 DX cooling coils via the Unit 2 ESW reactor building connection (Division 1 of ESW provides cooling water to the A DX Cooler; Division 2 of ESW cools the B DX Cooler). There are no direct TS requirements for the emergency switchgear and load center room coolers to be OPERABLE. However, they are required to be functional for their respective switchgears and load centers to be OPERABLE.

During the evolution to replace the ESW piping, the reactor building chilled water system will not be impacted and will continue to provide the normal supply of cooling water to the emergency switchgear and load center room coolers. Additionally, only one train of ESW will be removed from service at a time; i.e., the other division of ESW will still be OPERABLE and is still available to be the emergency cooling water source to the switchgear and load center room coolers. Thus, the expected heat load would still be able to be removed from the switchgear and load center rooms in the event of an accident during replacement activities which resulted in a loss of the reactor building chilled water system. Furthermore, as discussed in Section 3.1, restoration of the ESW division being replaced is never expected to take longer than the Completion Time allotted in LCO 3.7.2. While the restoration efforts may not return the

ESW division to OPERABLE status, they will allow for a backup cooling source to be established for the impacted switchgear or load center room cooler during ESW piping replacement at the Unit 1 Reactor Building penetration.

Spent Fuel Pool Makeup

Each unit has a spent fuel pool which are interconnected via a transfer canal. During normal operations, the spent fuel pools are crosstied to the common shipping cask pit. Makeup water to replenish evaporative and small leakage losses from the pools is provided from the condensate transfer storage tank for Unit 1 and the demineralized water system for Unit 2. However, a line from each of the two ESW loops is connected to the RHR intertie diffuser lines of each spent fuel pool, allowing for emergency makeup in support of RHR Spent Fuel Pool cooling or during postulated boiling of the pool water (see Figures 1-4).

During the evolution to replace the ESW piping, the condensate transfer system will not be impacted and will continue to provide the normal supply of makeup water to the spent fuel pools. Additionally, only one train of ESW will be removed from service at a time; i.e., the other division of ESW will still be OPERABLE and is still available to be the emergency makeup water source to the spent fuel pools. Since Susquehanna maintains the Unit 1 and 2 spent fuel pools crosstied during outages, the non-affected ESW division's supply via either unit can provide adequate makeup. Thus, the expected evaporative losses would still be able to be made up in the event of an accident during the piping replacement evolution which resulted in the loss of the condensate transfer system and, therefore, there are no TS impacts on the spent fuel makeup capability for either the online or outage unit. Furthermore, as discussed in Section 3.1, restoration of the ESW division being replaced is never expected to take longer the Completion Time allotted in LCO 3.7.2. While the restoration efforts may not return the ESW division to OPERABLE status, they will allow for a backup makeup source to be established for the spent fuel pools.

Reactor Building Closed Cooling Water System

The Reactor Building Closed Cooling Water (RBCCW) system is a closed loop system that transfers heat from miscellaneous reactor auxiliary plant equipment to the service water system through the heat exchangers. It does not provide a safety-related function. The RBCCW system consists of two 100 percent capacity cooling water pumps, two 100 percent capacity heat exchangers, and the associated valves, piping and controls.

The RHRSW system does not provide cooling to the RBCCW system. The ESW system is the backup cooling water source to the RBCCW heat exchangers (via operator action) if the service water system is non-functional. RBCCW is not required to perform a function in the event of an accident and, therefore, the ESW pipe replacement will have no TS impacts on the RBCCW system in either the online or outage unit.

Turbine Building Closed Cooling Water System

The Turbine Building Closed Cooling Water (TBCCW) system is a closed loop system that transfers heat from miscellaneous turbine building plant equipment to the service water system through the heat exchangers. It does not perform a safety-related function. The TBCCW system consists of two 100 percent capacity cooling water pumps, two 100 percent capacity heat exchangers, and the associated valves, piping and controls.

The RHRSW system does not provide cooling to the TBCCW system. The ESW system is the backup cooling water source to the TBCCW heat exchangers (via operator action) if the service water system is non-functional. TBCCW is not required to perform a function in the event of an accident and, therefore, the ESW pipe replacement will have no TS impacts on the TBCCW system in either the online or outage unit.

FLEX Strategy

The capability to implement Fukushima Response FLEX strategies adds additional defense in depth and will be available for deployment on either unit prior to the ESW piping replacement. These defense in depth measures are aimed at providing a means to cool the reactor cores during the proposed activity and preventing core damage, containment damage, and preservation of consequence mitigation. There are no impacts on the FLEX strategies associated with this request.

Susquehanna transmitted a notification of full compliance with Order EA-12-049, "Order Modifying Licenses with Regard to Requirements for Mitigation Strategies for Beyond Design Basis External Events," for SSES Units 1 and 2 in a letter dated June 26, 2018 (Reference 2). Susquehanna transmitted a notification of full compliance with Order EA-12-051, "Order Modifying Licenses with Regard to Requirements for Reliable Spent Fuel Pool Instrumentation," for SSES Units 1 and 2 in a letter dated July 2, 2015 (Reference 3). Susquehanna transmitted a notification of full compliance with Order EA-13-109, "Order Modifying Licenses with Regard to Reliable Hardened Containment Vents Capable of Operation Under Severe Accident Conditions," in a letter dated June 26, 2018 (Reference 4). The FLEX strategy for SSES was developed in accordance with Nuclear Energy Institute (NEI) Topical Report NEI 12-06, which was endorsed by the NRC in JLD-ISG-2012-01. The key aspects of the strategy are as follows:

- The objective of the FLEX strategies is to establish an indefinite coping capability in order to: (1) prevent damage to the fuel in the reactors; (2) maintain the containment function; and (3) maintain cooling and prevent damage to fuel in the spent fuel pool using installed equipment, on-site portable equipment, and offsite resources.

- FLEX Support Guidelines that can be used by operators in support of abnormal operating procedures and emergency operating procedures to maintain and restore key safety functions.

- An array of portable water supply equipment and electrical equipment that can be aligned to provide a source of reactor makeup, restore power to vital batteries, and provide an even longer term source of heat removal.

- Staffing and communications and associated training to support all near term and long-term actions that are part of the strategy.

- Additional equipment and procedures from a National SAFER Response Center within a few days of event initiation that can re-establish some electrical power and cooling.

### 3.3 Compensatory Measures

During the evolution to replace the ESW piping, Susquehanna will implement the following compensatory measures to manage risk:

1. The opposite division ESW and RHRSW systems will be OPERABLE and available prior to breaching the pipe on the affected division.

2. Procedures will be established to provide direction for restoring the affected ESW and RHRSW divisions to a functional status. The procedures will require designating individuals to perform the restoration tasks and that the required materials be pre-staged at the work site.

3. FLEX strategies will be available for implementation as additional defense in depth contingency on both units.

4. The Unit 1 and 2 spent fuel pools will remain cross-tied through the cask storage pit.

5. Training will be provided to Operations personnel on this TS change and the associated evolution to replace the ESW piping.

6. The Outage Control Center will be manned while performing the activities authorized by this amendment.

7. A temporary missile barrier will be available for use while the buried ESW piping is exposed.

8. A sump pump will be staged at the work area to prevent flooding into the reactor building in the event of torrential rain during the pipe replacement activities.

9. Susquehanna will not enter the window of common shutdown cooling until the ESW piping is at least watertight.

10. Equipment will be protected and discretionary maintenance controlled in accordance with procedure NDAP-QA-0340, "Protected Equipment Program." Susquehanna will evaluate the ESW piping replacement and protect equipment in accordance with the program at the time of the evolution. Currently, the list of protected equipment would include:
    a. The four required DGs
    b. Opposite division ESW pumps and spray pond valves and associated power supplies
    c. Opposite division RHRSW pumps and valves and associated power supplies
    d. Opposite division 4.16 kV buses
    e. Opposite division 250 V and 125 V batteries
    f. Opposite division DX unit
    g. Opposite division Control Structure Chiller

It should be noted that during the initial ESW pipe replacement evolution in 2020, 480 V load center transformer 1X210 will also be replaced, utilizing the extension to LCO 3.7.1 approved in Unit 2 Amendment 248 (Reference 1). The transformer replacement will occur on the same division as the ESW pipe replacement. In Reference 5, Susquehanna identified the following four actions to mitigate the consequences of an accident on Unit 2 when replacing 1X210:

1. Unit 1 in MODE 5 for at least 24 hours with the core and fuel pools connected through the reactor cavity;

2. Spray pond temperature is maintained less than 82°F;

3. ESSW pumphouse doors or dampers aligned to provide adequate cooling; and

4. Designated personnel to open the spray array valves and close the bypass valve.

The actions required to recover the ESW and RHRSW systems in the event of an accident on Unit 2 during the ESW pipe replacement evolution are not in conflict with the four recovery actions for transformer replacement stated above. The recovery/mitigating actions could be performed simultaneously for each replacement project without complicating the response to an accident on Unit 2. Therefore, the replacement efforts can take place in parallel without an undue increase to overall risk.

# 4. Regulatory Evaluation

## 4.1 Applicable Regulatory Requirements/Criteria

Title 10 Code of Federal Regulations (10 CFR) 50.36

(a)(1) Each applicant for a license authorizing operation of a production or utilization facility shall include in his application proposed technical specifications in accordance with the requirements of this section. A summary statement of the bases or reasons for such specifications, other than those covering administrative controls, shall also be included in the application, but shall not become part of the technical specifications. . . (b)Each license authorizing operation of a production or utilization facility of a type described in §50.21 or §50.22 will include technical specifications. The technical specifications will be derived from the analyses and evaluation included in the safety analysis report, and amendments submitted thereto. . . (c)Technical specifications will include items in the following categories: . . .

Conclusion

The TOC are not required to be a part of the TS. The TOC references where specific TS sections can be found throughout the TS, but does not contain technical information required by 10 CFR 50.36. Since the TS TOC does not include information required by 10 CFR 50.36 to be reviewed by the NRC staff, inclusion of a TOC within the TS is optional, and is not required by the regulation. Thus, removal of the TOC from the TS constitutes an administrative change and is, therefore, acceptable.

10 CFR 50.36(c)(2)

Limiting conditions for operation are the lowest functional capability or performance levels of equipment required for safe operation of the facility. When a limiting condition for operation of a nuclear reactor is not met, the licensee shall shut down the reactor or follow any remedial action permitted by the technical specifications until the condition can be met.

Conclusion

10 CFR 50.36 sets the regulatory requirements for the content of TS as quoted above. 10 CFR 50.36(c)(2) requires, in part, that the TS contain LCOs, and that remedial actions are prescribed for when a nuclear power plant fails to meet an LCO. The proposed change would increase the time allotted to perform remedial actions, which are not specified by the regulation. Therefore, 10 CFR 50.36(c)(2) will continue to be met.

General Design Criteria

During the applicable period of this proposed license amendment, SSES will maintain the ability to meet the applicable General Design Criteria (GDC) as outlined in 10 CFR 50, Appendix A. The applicable GDC are:

GDC-5, Sharing of Structures, Systems, and Components

Structures, systems, and components important to safety shall not be shared among nuclear power units unless it can be shown that such sharing will not significantly impair their ability to perform their safety functions, including, in the event of an accident in one unit, an orderly shutdown and cooldown of the remaining units.

GDC-19, Control Room

A control room shall be provided from which actions can be taken to operate the nuclear power unit safely under normal conditions and to maintain it in a safe condition under accident conditions, including loss-of-coolant accidents. Adequate radiation protection shall be provided to permit access and occupancy of the control room under accident conditions without personnel receiving radiation exposures in excess of 5 rem whole body, or its equivalent to any part of the body, for the duration of the accident. Equipment at appropriate locations outside the control room shall be provided (1) with a design capability for prompt hot shutdown of the reactor, including necessary instrumentation and controls to maintain the unit in a safe condition during hot shutdown, and (2) with a potential capability for subsequent cold shutdown of the reactor through the use of suitable procedures.

GDC-34, Residual Heat Removal

A system to remove residual heat shall be provided. The system safety function shall be to transfer fission product decay heat and other residual heat from the reactor core at a rate such that specified acceptable fuel design limits and the design conditions of the reactor coolant pressure boundary are not exceeded.

Suitable redundancy in components and features, and suitable interconnections, leak detection, and isolation capabilities shall be provided to assure that for onsite electric power system operation (assuming offsite power is not available) and for offsite electric power system operation (assuming onsite power is not available) the system safety function can be accomplished, assuming a single failure.

GDC-35, Emergency Core Cooling

A system to provide abundant emergency core cooling shall be provided. The system safety function shall be to transfer heat from the reactor core following any loss of reactor coolant at a rate such that (1) fuel and clad damage that could interfere with continued effective core cooling is prevented and (2) clad metal-water reaction is limited to negligible amounts.

Suitable redundancy in components and features, and suitable interconnections, leak detection, isolation, and containment capabilities shall be provided to assure that for onsite electric power system operation (assuming offsite power is not available) and for offsite electric power system operation (assuming onsite power is not available) the system safety function can be accomplished, assuming a single failure.

GDC-38, Containment Heat Removal

A system to remove heat from the reactor containment shall be provided. The system safety function shall be to reduce rapidly, consistent with the functioning of other associated systems, the containment pressure and temperature following a loss-of-coolant accident and maintain them at acceptably low levels.

Suitable redundancy in components and features, and suitable interconnections, leak detection, isolation, and containment capabilities shall be provided to assure that for onsite electric power system operation (assuming offsite power is not available) and for offsite electric power system operation (assuming onsite power is not available) the system safety function can be accomplished, assuming a single failure.

GDC-44, Cooling Water

A system to transfer heat from structures, systems, and components important to safety, to an ultimate heat sink shall be provided. The system safety function shall be to transfer the combined heat load of these structures, systems, and components under normal operating and accident conditions.

Suitable redundancy in components and features, and suitable interconnections, leak detection, and isolation capabilities shall be provided to assure that for onsite electric power system operation (assuming offsite power is not available) and for offsite electric power system operation (assuming onsite power is not available) the system safety function can be accomplished, assuming a single failure.

Conclusion

The change proposed to the TS will not permanently impact any installed component at SSES. During the pipe replacement activities, one division of ESW and RHRSW will not be capable of performing their safety function. However, the other division of ESW and RHRSW will remain OPERABLE throughout the pipe replacement evolution. One division of ESW and RHRSW can remove all necessary heat loads in the event of an accident on the online unit transferring that heat to the UHS while maintaining the outage unit in a safe shutdown condition. Therefore, the criteria above and as listed in 10 CFR 50, Appendix A and the SSES FSAR continue to be met.

## 4.2 Precedent

The NRC has approved multiple similar amendment requests to allow for a temporary increase in Completion Time to replace piping in service water systems. The most recent such amendment was issued for a nuclear service water system pipe replacement at McGuire Nuclear Station on February 15, 2018 (Reference 6). McGuire Nuclear Station is a four-loop pressurized water reactor and the primary and secondary systems differ from those of SSES accordingly. However, the McGuire nuclear service water system is functionally equivalent to the SSES ESW system in that they both can take suction from the UHS, provide cooling water to ECCS pump room coolers, DGs, and the control structure chillers, among other heat loads, and return the water to the UHS. Thus, the NRC's approval of the McGuire amendment is applicable to Susquehanna's request for SSES.

## 4.3 No Significant Hazards Considerations Analysis

In accordance with the requirements of 10 CFR 50.90, Susquehanna Nuclear LLC (Susquehanna), requests an amendment to the Technical Specifications (TS) for the Susquehanna Steam Electric Station (SSES), Units 1 and 2. The proposed amendment would change the SSES TS to permit a temporary extension to the Completion Times of Required Actions in the SSES TS to allow for the replacement of Emergency Service Water (ESW) system piping. The proposed amendment would also make an administrative change to the TS by removing the Table of Contents (TOC) and placing it under licensee control.

Susquehanna has evaluated the proposed amendment against the standards in 10 CFR 50.92 and has determined that the operation of the SSES in accordance with the proposed amendment presents no significant hazards. Susquehanna's evaluation against each of the criteria in 10 CFR 50.92 follows.

1. Does the proposed change involve a significant increase in the probability or consequences of an accident previously evaluated?

   Response: No

The proposed change is to permit a temporary extension to existing TS Completion Times to allow for ESW system piping replacement. The division of the ESW and RHRSW systems that are not being worked on will remain fully OPERABLE during the 14 day Completion Time. Although it would not be able to be restored to a fully OPERABLE status, the impacted division of ESW and RHRSW will be capable of being restored to perform its safety function within the limiting 72 hour Completion Time. The ESW and RHRSW systems and their supported equipment function as accident mitigators. Removing one division from service for a limited period of time does not affect any accident initiator and, therefore, cannot change the probability of an accident. The proposed changes and the ESW repair evolution have been evaluated to assess their impact on the systems affected and ensure design basis safety functions are preserved. There is a slight increase in risk associated with having the ESW and RHRSW systems and their supported systems out of service for longer than currently allowed by the SSES TS. However, Susquehanna will maintain the non-impacted division of ESW and RHRSW fully OPERABLE throughout the repair evolution and will protect required equipment in accordance with its protected equipment program. The non-impacted division is capable of serving 100 percent of the heat loads for both the online and outage units during an accident. As such, there is no impact on consequence mitigation for any transient or accident.

Additionally, Susquehanna proposes an administrative change to remove the TOC from the TS and place it under licensee control. This has no impact on the design or operation of the plant and cannot impact the probability of an accident in any way.

Therefore, the proposed change does not involve a significant increase in the probability or consequences of an accident previously evaluated.

2. Does the proposed change create the possibility of a new or different kind of accident from any accident previously evaluated?

   Response: No

   The proposed change is to permit a temporary extension to existing TS Completion Times to allow for ESW system piping replacement. The change does not involve a physical alteration of the plant (i.e., no different equipment will be installed) or a change in the methods governing normal plant operations. The proposed change does not alter assumptions made in the safety analysis. During the replacement evolution, one division of the ESW and RHRSW systems will not be capable of performing their safety function. However, the other division of ESW and RHRSW are capable of providing the necessary cooling in the event of an accident. Furthermore, the ability to perform the safety function for the impacted division can always be recovered within the existing TS Completion Times and the systems will be fully restored to OPERABLE status following the pipe replacement. The proposed change

does not introduce new failure mechanisms, malfunctions, or accident initiators not considered in the design and licensing basis.

Additionally, Susquehanna proposes an administrative change to remove the TOC from the TS and place it under licensee control. This has no impact on the design or operation of the plant and cannot create a new or different kind of accident.

Therefore, the proposed change does not create the possibility of a new or different kind of accident from any accident previously evaluated.

3. Does the proposed change involve a significant reduction in a margin of safety?

   Response: No

   The proposed change is to permit a temporary extension to existing TS Completion Times to allow for ESW system piping replacement. The proposed change does not alter the manner in which safety limits, limiting safety settings, or limiting conditions for operation are determined. The safety analysis assumptions and acceptance criteria are not affected by this change. The change will ultimately result in an increase in a margin of safety due to installation of the new piping.

   Additionally, Susquehanna proposes an administrative change to remove the TOC from the TS and place it under licensee control. This has no impact on the design or operation of the plant and cannot impact any safety margins.

   Therefore, the proposed change does not involve a significant reduction in a margin of safety.

Based on the above evaluation, Susquehanna concludes that the proposed amendment does not involve a significant hazards consideration under the standards set forth in 10 CFR 50.92(c), and accordingly, a finding of "no significant hazards consideration" is justified.

## 4.4 Conclusions

In conclusion, based on the considerations discussed above, (1) there is reasonable assurance that the health and safety of the public will not be endangered by operation in the proposed manner, (2) such activities will be conducted in compliance with the Commission's regulations, and (3) the issuance of the amendment will not be inimical to the common defense and security or to the health and safety of the public.

## 5. Environmental Consideration

Susquehanna has determined that the proposed amendment would change a requirement with respect to installation or use of a facility component located within the restricted area, as defined in 10 CFR 20, or would change an inspection or surveillance requirement. However, the proposed amendment does not involve (i) a significant hazards consideration, (ii) a significant change in the types or significant increase in the amounts of any effluents that may be released offsite, or (iii) a significant increase in individual or cumulative occupational radiation exposure. Accordingly, the proposed amendment meets the eligibility criterion for categorical exclusion set forth in 10 CFR 51.22(c)(9). Therefore, pursuant to 10 CFR 51.22(b), no environmental impact statement or environmental assessment need be prepared in connection with the proposed amendment.

## 6. References

1. NRC letter to Susquehanna, "Issuance of Amendment Re: Temporary Change of Technical Specifications to Allow Replacement of Engineered Safeguard System Load Center Transformers (CAC No. MF7298)," dated January 26, 2017 (ADAMS Accession No. ML17004A250)

2. Susquehanna letter to NRC, "Report of Full Compliance with March 12, 2012 Commission Order Modifying Licenses with Regard to Requirements for Mitigation Strategies for Beyond-Design-Basis External Events (NRC Order EA-12-049)," dated June 26, 2018 (ADAMS Accession No. ML18179A202)

3. Susquehanna letter to NRC, "Completion of Actions Required by NRC Order EA-12-051, 'Reliable Spent Fuel Pool Instrumentation,'" dated July 2, 2015 (ADAMS Accession No. ML15211A378)

4. Susquehanna letter to NRC, "Report of Full Compliance with June 06, 2013 Commission Order Modifying Licenses with Regard to Reliable Hardened Containment Vents Capable of Operation under Sever Accident Conditions (NRC Order EA-13-109)," dated June 26, 2018 (ADAMS Accession No. ML 18179A221)

5. Susquehanna letter to NRC, "Response to Request for Additional Information Re: License Amendment Request Extending Completion Times in Support of 480 V ESS Load Center Transformer Replacements," dated October 10, 2016 (ADAMS Accession No. ML16284A013)

6. NRC letter to Duke Energy, "Issuance of Amendments 308 and 287 for Temporary Changes to Technical Specifications to Address an 'A' Train Nuclear Service Water Non-Conforming Condition (CAC Nos. MG0242 and MG0243; EPID L-2017-LLA-0229)," dated February 15, 2018 (ADAMS Accession No. ML18030A682)

# Enclosure 2 of PLA-7751

# Marked-Up Technical Specification Pages

Revised Technical Specifications Pages

Unit 1 TS Pages
3.7-2, 3.7-4, and 3.7-5

Unit 2 TS Pages
3.7-1, 3.7-2, 3.7-3, 3.7-3a, 3.7-3b, 3.7-3c, 3.7-3d, 3.7-3e, and 3.7-4

ACTIONS (continued)

| CONDITION | REQUIRED ACTION | COMPLETION TIME |
|---|---|---|
| B. One Unit 1 RHRSW subsystem inoperable. | B.1 Restore the Unit 1 RHRSW subsystem to OPERABLE status. | 14 days during the replacement of the Unit 2 ESW piping[1]<br><br>OR<br><br>72 hours from discovery of the associated Unit 2 RHRSW subsystem inoperable<br><br>AND<br><br>7 days |
| C. Both Unit 1 RHRSW subsystems inoperable. | C.1 Restore one Unit 1 RHRSW subsystem to OPERABLE status. | 8 hours from discovery of one Unit 2 RHRSW subsystem not capable of supporting associated Unit 1 RHRSW subsystem<br><br>AND<br><br>72 hours |
| D. Required Action and associated Completion Time not met.<br><br>OR<br><br>UHS inoperable. | D.1 Be in MODE 3.<br><br>AND<br><br>D.2 Be in MODE 4. | 12 hours<br><br><br><br>36 hours |

[1]Upon completion of the Unit 2 'A' and 'B' ESW piping replacement, this temporary extension is no longer applicable and will expire on June 25, 2027.

## 3.7 PLANT SYSTEMS

### 3.7.2 Emergency Service Water (ESW) System

LCO 3.7.2 Two ESW subsystems shall be OPERABLE.

APPLICABILITY: MODES 1, 2, and 3.

ACTIONS

----------NOTE----------
Enter applicable Conditions and Required Actions of LCO 3.8.1, "AC Sources," for DGs made inoperable by ESW.
---

| CONDITION | REQUIRED ACTION | COMPLETION TIME |
|---|---|---|
| A. One ESW pump in each subsystem inoperable. | A.1 Restore both ESW pumps to OPERABLE status. | 7 days |
| B. One or two ESW subsystems not capable of supplying ESW flow to at least three required DGs. | B.1 Restore ESW flow to the required DGs to ensure that each ESW subsystem is supplying at least three DGs. | 14 days during the replacement of the Unit 2 ESW piping[(1)]<br><br>OR<br><br>7 days |
| C. One ESW subsystem inoperable for reasons other than Condition B. | C.1 Restore the ESW subsystem to OPERABLE status. | 14 days during the replacement of the Unit 2 ESW piping[(1)]<br><br>OR<br><br>7 days |

[(1)]Upon completion of the Unit 2 'A' and 'B' ESW piping replacement, this temporary extension is no longer applicable and will expire on June 25, 2027.

ACTIONS (continued)

| CONDITION | REQUIRED ACTION | COMPLETION TIME |
|---|---|---|
| D. Required Action and associated Completion Time of Condition A, B or C not met.<br><br>OR<br><br>Both ESW subsystems inoperable for reasons other than Conditions A and B. | D.1 Be in MODE 3.<br><br>AND<br><br>D.2 Be in MODE 4. | 12 hours<br><br><br><br>36 hours |

SURVEILLANCE REQUIREMENTS

| SURVEILLANCE | | FREQUENCY |
|---|---|---|
| SR 3.7.2.1 | ----------NOTE----------<br>Isolation of flow to individual components does not render ESW System inoperable.<br>----------<br><br>Verify each ESW subsystem manual, power operated, and automatic valve in the flow paths servicing safety related systems or components, that is not locked, sealed, or otherwise secured in position, is in the correct position. | In accordance with the Surveillance Frequency Control Program |
| SR 3.7.2.2 | Verify each ESW subsystem actuates on an actual or simulated initiation signal. | In accordance with the Surveillance Frequency Control Program |

## 3.7 PLANT SYSTEMS

### 3.7.1 Residual Heat Removal Service Water (RHRSW) System and the Ultimate Heat Sink (UHS)

LCO 3.7.1 Two RHRSW subsystems and the UHS shall be OPERABLE.

APPLICABILITY: MODES 1, 2, and 3.

ACTIONS

----------NOTE----------
Enter applicable Conditions and Required Actions of LCO 3.4.8, "Residual Heat Removal (RHR) Shutdown Cooling System-Hot Shutdown," for RHR shutdown cooling made inoperable by RHRSW System.
---

| CONDITION | REQUIRED ACTION | COMPLETION TIME |
|---|---|---|
| A. ----------NOTE---------- Separate Condition entry is allowed for each valve. ---------- | A.1 Declare the associated RHRSW subsystems inoperable. | Immediately |
| | AND | |
| One valve in Table 3.7.1-1 inoperable. | A.2 Establish an open flow path to the UHS. | 8 hours |
| OR | AND | |
| One valve in Table 3.7.1-2 inoperable. | A.3 Restore the inoperable valve(s) to OPERABLE status. | 8 hours from the discovery of an inoperable RHRSW subsystem in the opposite loop from the inoperable valve(s) |
| OR | | AND |
| One valve in Table 3.7.1-3 inoperable. | | 72 hours |

(continued)

ACTIONS (continued)

| CONDITION | REQUIRED ACTION | COMPLETION TIME |
|---|---|---|
| OR<br><br>Any combination of valves in Table 3.7.1-1, Table 3.7.1-2, or Table 3.7.1-3 in the same return loop inoperable. | | OR<br><br>7 days during the replacement of 480 V ESS Load Center Transformers 1X210 and 1X220 in Unit 1[(1)] |
| B. One Unit 2 RHRSW subsystem inoperable. | B.1 Restore the Unit 2 RHRSW subsystem to OPERABLE status. | 7 days during the replacement of 480 V ESS Load Center Transformers 1X210 and 1X220 in Unit 1[(1)]<br><br>OR<br><br>14 days during the replacement of the Unit 1 ESW piping[(2)]<br><br>OR<br><br>72 hours from discovery of the associated Unit 1 RHRSW subsystem inoperable<br><br>AND<br><br>7 days |

[(1)]Upon completion of the replacement of the 480 V ESS Load Center Transformers 1X210 and 1X220 in Unit 1, this temporary extension is no longer applicable and will expire on June 15, 2020.

[(2)]Upon completion of the Unit 1 'A' and 'B' ESW piping replacement, this temporary extension is no longer applicable and will expire on June 25, 2026.

ACTIONS (continued)

| CONDITION | REQUIRED ACTION | COMPLETION TIME |
|---|---|---|
| C. Both Unit 2 RHRSW subsystems inoperable. | C.1 Restore one Unit 2 RHRSW subsystem to OPERABLE status. | 8 hours from discovery of one Unit 1 RHRSW subsystem not capable of supporting associated Unit 2 RHRSW subsystem<br><br>AND<br><br>72 hours |
| D. Required Action and associated Completion Time not met.<br><br>OR<br><br>UHS inoperable. | D.1 Be in MODE 3.<br><br>AND<br><br>D.2 Be in MODE 4. | 12 hours<br><br><br><br>36 hours |

SURVEILLANCE REQUIREMENTS

| SURVEILLANCE | | FREQUENCY |
|---|---|---|
| SR 3.7.1.1 | Verify the water level is greater than or equal to 678 feet 1 inch above Mean Sea Level. | In accordance with the Surveillance Frequency Control Program |

SURVEILLANCE REQUIREMENTS (continued)

| SURVEILLANCE | | FREQUENCY |
|---|---|---|
| SR 3.7.1.2 | Verify the average water temperature of the UHS is:<br><br>a. ----------NOTE----------<br>Only applicable with both units in MODE 1 or 2, or with either unit in MODE 3 for less than twelve (12) hours.<br>----------<br><br>≤ 85°F; or<br><br>b. ----------NOTE----------<br>Only applicable when either unit has been in MODE 3 for at least twelve (12) hours but not more than twenty-four (24) hours.<br>----------<br><br>≤ 87°F; or<br><br>c. ----------NOTE----------<br>Only applicable when either unit has been in MODE 3 for at least twenty-four (24) hours.<br>----------<br><br>≤ 88°F. | In accordance with the Surveillance Frequency Control Program |
| SR 3.7.1.3 | Verify each RHRSW manual, power operated, and automatic valve in the flow path, that is not locked, sealed, or otherwise secured in position, is in the correct position or can be aligned to the correct position. | In accordance with the Surveillance Frequency Control Program |
| SR 3.7.1.4 | Verify that valves HV-01222A and B (the spray array bypass valves) close upon receipt of a closing signal and open upon receipt of an opening signal. | In accordance with the Surveillance Frequency Control Program |
| SR 3.7.1.5 | Verify that valves HV-01224A1 and B1 (the large spray array valves) close upon receipt of a closing signal and open upon receipt of an opening signal. | In accordance with the Surveillance Frequency Control Program |

SURVEILLANCE REQUIREMENTS (continued)

| SURVEILLANCE | | FREQUENCY |
|---|---|---|
| SR 3.7.1.6 | Verify that valves HV-01224A2 and B2 (the small spray array valves) close upon receipt of a closing signal and open upon receipt of an opening signal. | In accordance with the Surveillance Frequency Control Program |
| SR 3.7.1.7 | Verify that valves 012287A and 012287B (the spray array bypass manual valves) are capable of being opened and closed. | In accordance with the Surveillance Frequency Control Program |

TABLE 3.7.1-1

Ultimate Heat Sink Spray Array Valves

| VALVE NUMBER | VALVE DESCRIPTION |
|---|---|
| HV-01224A1 | Loop A large spray array valve |
| HV-01224B1 | Loop B large spray array valve |
| HV-01224A2 | Loop A small spray array valve |
| HV-01224B2 | Loop B small spray array valve |

TABLE 3.7.1-2

Ultimate Heat Sink Spray Array Bypass Valves

| VALVE NUMBER | VALVE DESCRIPTION |
|---|---|
| HV-01222A | Loop A spray array bypass valve |
| HV-01222B | Loop B spray array bypass valve |

TABLE 3.7.1-3

Ultimate Heat Sink Spray Array Bypass Manual Valves

| VALVE NUMBER | VALVE DESCRIPTION |
|---|---|
| 012287A | Loop A spray array bypass manual valve |
| 012287B | Loop B spray array bypass manual valve |

## 3.7 PLANT SYSTEMS

### 3.7.2 Emergency Service Water (ESW) System

LCO 3.7.2 Two ESW subsystems shall be OPERABLE.

APPLICABILITY: MODES 1, 2, and 3.

ACTIONS

----------NOTE----------
Enter applicable Conditions and Required Actions of LCO 3.8.1, "AC Sources," for DGs made inoperable by ESW.
---

| CONDITION | REQUIRED ACTION | COMPLETION TIME |
|---|---|---|
| A. One ESW pump in each subsystem inoperable. | A.1 Restore both ESW pumps to OPERABLE status. | 7 days |
| B. One or two ESW subsystems not capable of supplying ESW flow to at least three required DGs. | B.1 Restore ESW flow to the required DGs to ensure that each ESW subsystem is supplying at least three DGs. | 14 days during the replacement of the Unit 1 ESW piping[(1)]<br><br>OR<br><br>7 days |
| C. One ESW subsystem inoperable for reasons other than Condition B. | C.1 Restore the ESW subsystem to OPERABLE status. | 14 days during the replacement of the Unit 1 ESW piping[(1)]<br><br>OR<br><br>7 days |

[(1)]Upon completion of the Unit 1 'A' and 'B' ESW piping replacement, this temporary extension is no longer applicable and will expire on June 25, 2026.

# Enclosure 3 of PLA-7751

# Revised (Clean) Technical Specification Pages

Revised Technical Specifications Pages

Unit 1 TS Pages
3.7-2, 3.7-4, and 3.7-5

Unit 2 TS Pages
3.7-1, 3.7-2, 3.7-3, 3.7-3a, 3.7-3b, 3.7-3c, 3.7-3d, 3.7-3e, and 3.7-4

ACTIONS (continued)

| CONDITION | REQUIRED ACTION | COMPLETION TIME |
|---|---|---|
| B. One Unit 1 RHRSW subsystem inoperable. | B.1 Restore the Unit 1 RHRSW subsystem to OPERABLE status. | 14 days during the replacement of the Unit 2 ESW piping[1]<br><br>OR<br><br>72 hours from discovery of the associated Unit 2 RHRSW subsystem inoperable<br><br>AND<br><br>7 days |
| C. Both Unit 1 RHRSW subsystems inoperable. | C.1 Restore one Unit 1 RHRSW subsystem to OPERABLE status. | 8 hours from discovery of one Unit 2 RHRSW subsystem not capable of supporting associated Unit 1 RHRSW subsystem<br><br>AND<br><br>72 hours |
| D. Required Action and associated Completion Time not met.<br><br>OR<br><br>UHS inoperable. | D.1 Be in MODE 3.<br><br>AND<br><br>D.2 Be in MODE 4. | 12 hours<br><br><br><br>36 hours |

[1]Upon completion of the Unit 2 'A' and 'B' ESW piping replacement, this temporary extension is no longer applicable and will expire on June 25, 2027.

## 3.7 PLANT SYSTEMS

### 3.7.2 Emergency Service Water (ESW) System

LCO 3.7.2 Two ESW subsystems shall be OPERABLE.

APPLICABILITY: MODES 1, 2, and 3.

ACTIONS

----------NOTE----------
Enter applicable Conditions and Required Actions of LCO 3.8.1, "AC Sources," for DGs made inoperable by ESW.
---

| CONDITION | REQUIRED ACTION | COMPLETION TIME |
|---|---|---|
| A. One ESW pump in each subsystem inoperable. | A.1 Restore both ESW pumps to OPERABLE status. | 7 days |
| B. One or two ESW subsystems not capable of supplying ESW flow to at least three required DGs. | B.1 Restore ESW flow to the required DGs to ensure that each ESW subsystem is supplying at least three DGs. | 14 days during the replacement of the Unit 2 ESW piping[(1)]<br><br>OR<br><br>7 days |
| C. One ESW subsystem inoperable for reasons other than Condition B. | C.1 Restore the ESW subsystem to OPERABLE status. | 14 days during the replacement of the Unit 2 ESW piping[(1)]<br><br>OR<br><br>7 days |

[(1)]Upon completion of the Unit 2 'A' and 'B' ESW piping replacement, this temporary extension is no longer applicable and will expire on June 25, 2027.

ACTIONS (continued)

| CONDITION | REQUIRED ACTION | COMPLETION TIME |
|---|---|---|
| D. Required Action and associated Completion Time of Condition A, B or C not met.<br><br>OR<br><br>Both ESW subsystems inoperable for reasons other than Conditions A and B. | D.1 Be in MODE 3.<br><br>AND<br><br>D.2 Be in MODE 4. | 12 hours<br><br><br><br>36 hours |

SURVEILLANCE REQUIREMENTS

| SURVEILLANCE | | FREQUENCY |
|---|---|---|
| SR 3.7.2.1 | ----------NOTE----------<br>Isolation of flow to individual components does not render ESW System inoperable.<br>----------<br><br>Verify each ESW subsystem manual, power operated, and automatic valve in the flow paths servicing safety related systems or components, that is not locked, sealed, or otherwise secured in position, is in the correct position. | In accordance with the Surveillance Frequency Control Program |
| SR 3.7.2.2 | Verify each ESW subsystem actuates on an actual or simulated initiation signal. | In accordance with the Surveillance Frequency Control Program |

## 3.7 PLANT SYSTEMS

### 3.7.1 Residual Heat Removal Service Water (RHRSW) System and the Ultimate Heat Sink (UHS)

LCO 3.7.1 Two RHRSW subsystems and the UHS shall be OPERABLE.

APPLICABILITY: MODES 1, 2, and 3.

ACTIONS

----------NOTE----------
Enter applicable Conditions and Required Actions of LCO 3.4.8, "Residual Heat Removal (RHR) Shutdown Cooling System-Hot Shutdown," for RHR shutdown cooling made inoperable by RHRSW System.
---

| CONDITION | REQUIRED ACTION | COMPLETION TIME |
|---|---|---|
| A. ----------NOTE---------- Separate Condition entry is allowed for each valve. ---------- | A.1 Declare the associated RHRSW subsystems inoperable. | Immediately |
| | AND | |
| One valve in Table 3.7.1-1 inoperable. | A.2 Establish an open flow path to the UHS. | 8 hours |
| OR | AND | |
| One valve in Table 3.7.1-2 inoperable. | A.3 Restore the inoperable valve(s) to OPERABLE status. | 8 hours from the discovery of an inoperable RHRSW subsystem in the opposite loop from the inoperable valve(s) |
| OR | | AND |
| One valve in Table 3.7.1-3 inoperable. | | 72 hours |

(continued)

ACTIONS (continued)

| CONDITION | REQUIRED ACTION | COMPLETION TIME |
|---|---|---|
| OR<br><br>Any combination of valves in Table 3.7.1-1, Table 3.7.1-2, or Table 3.7.1-3 in the same return loop inoperable. | | OR<br><br>7 days during the replacement of 480 V ESS Load Center Transformers 1X210 and 1X220 in Unit 1[(1)] |
| B. One Unit 2 RHRSW subsystem inoperable. | B.1 Restore the Unit 2 RHRSW subsystem to OPERABLE status. | 7 days during the replacement of 480 V ESS Load Center Transformers 1X210 and 1X220 in Unit 1[(1)]<br><br>OR<br><br>14 days during the replacement of the Unit 1 ESW piping[(2)]<br><br>OR<br><br>72 hours from discovery of the associated Unit 1 RHRSW subsystem inoperable<br><br>AND<br><br>7 days |

[(1)]Upon completion of the replacement of the 480 V ESS Load Center Transformers 1X210 and 1X220 in Unit 1, this temporary extension is no longer applicable and will expire on June 15, 2020.

[(2)]Upon completion of the Unit 1 ‘A’ and ‘B’ ESW piping replacement, this temporary extension is no longer applicable and will expire on June 25, 2026.

ACTIONS (continued)

| CONDITION | REQUIRED ACTION | COMPLETION TIME |
|---|---|---|
| C. Both Unit 2 RHRSW subsystems inoperable. | C.1 Restore one Unit 2 RHRSW subsystem to OPERABLE status. | 8 hours from discovery of one Unit 1 RHRSW subsystem not capable of supporting associated Unit 2 RHRSW subsystem<br><br>AND<br><br>72 hours |
| D. Required Action and associated Completion Time not met.<br><br>OR<br><br>UHS inoperable. | D.1 Be in MODE 3.<br><br>AND<br><br>D.2 Be in MODE 4. | 12 hours<br><br><br><br>36 hours |

SURVEILLANCE REQUIREMENTS

| SURVEILLANCE | | FREQUENCY |
|---|---|---|
| SR 3.7.1.1 | Verify the water level is greater than or equal to 678 feet 1 inch above Mean Sea Level. | In accordance with the Surveillance Frequency Control Program |

SURVEILLANCE REQUIREMENTS (continued)

| SURVEILLANCE | | FREQUENCY |
|---|---|---|
| SR 3.7.1.2 | Verify the average water temperature of the UHS is:<br><br>a. ----------NOTE----------<br>Only applicable with both units in MODE 1 or 2, or with either unit in MODE 3 for less than twelve (12) hours.<br>----------<br><br>≤ 85°F; or<br><br>b. ----------NOTE----------<br>Only applicable when either unit has been in MODE 3 for at least twelve (12) hours but not more than twenty-four (24) hours.<br>----------<br><br>≤ 87°F; or<br><br>c. ----------NOTE----------<br>Only applicable when either unit has been in MODE 3 for at least twenty-four (24) hours.<br>----------<br><br>≤ 88°F. | In accordance with the Surveillance Frequency Control Program |
| SR 3.7.1.3 | Verify each RHRSW manual, power operated, and automatic valve in the flow path, that is not locked, sealed, or otherwise secured in position, is in the correct position or can be aligned to the correct position. | In accordance with the Surveillance Frequency Control Program |
| SR 3.7.1.4 | Verify that valves HV-01222A and B (the spray array bypass valves) close upon receipt of a closing signal and open upon receipt of an opening signal. | In accordance with the Surveillance Frequency Control Program |
| SR 3.7.1.5 | Verify that valves HV-01224A1 and B1 (the large spray array valves) close upon receipt of a closing signal and open upon receipt of an opening signal. | In accordance with the Surveillance Frequency Control Program |

SURVEILLANCE REQUIREMENTS (continued)

| SURVEILLANCE | | FREQUENCY |
|---|---|---|
| SR 3.7.1.6 | Verify that valves HV-01224A2 and B2 (the small spray array valves) close upon receipt of a closing signal and open upon receipt of an opening signal. | In accordance with the Surveillance Frequency Control Program |
| SR 3.7.1.7 | Verify that valves 012287A and 012287B (the spray array bypass manual valves) are capable of being opened and closed. | In accordance with the Surveillance Frequency Control Program |

TABLE 3.7.1-1

Ultimate Heat Sink Spray Array Valves

| VALVE NUMBER | VALVE DESCRIPTION |
|---|---|
| HV-01224A1 | Loop A large spray array valve |
| HV-01224B1 | Loop B large spray array valve |
| HV-01224A2 | Loop A small spray array valve |
| HV-01224B2 | Loop B small spray array valve |

TABLE 3.7.1-2

Ultimate Heat Sink Spray Array Bypass Valves

| VALVE NUMBER | VALVE DESCRIPTION |
|---|---|
| HV-01222A | Loop A spray array bypass valve |
| HV-01222B | Loop B spray array bypass valve |

TABLE 3.7.1-3

Ultimate Heat Sink Spray Array Bypass Manual Valves

| VALVE NUMBER | VALVE DESCRIPTION |
|---|---|
| 012287A | Loop A spray array bypass manual valve |
| 012287B | Loop B spray array bypass manual valve |

## 3.7 PLANT SYSTEMS

### 3.7.2 Emergency Service Water (ESW) System

LCO 3.7.2 Two ESW subsystems shall be OPERABLE.

APPLICABILITY: MODES 1, 2, and 3.

ACTIONS

----------NOTE----------
Enter applicable Conditions and Required Actions of LCO 3.8.1, "AC Sources," for DGs made inoperable by ESW.
---

| CONDITION | REQUIRED ACTION | COMPLETION TIME |
|---|---|---|
| A. One ESW pump in each subsystem inoperable. | A.1 Restore both ESW pumps to OPERABLE status. | 7 days |
| B. One or two ESW subsystems not capable of supplying ESW flow to at least three required DGs. | B.1 Restore ESW flow to the required DGs to ensure that each ESW subsystem is supplying at least three DGs. | 14 days during the replacement of the Unit 1 ESW piping[(1)]<br><br><u>OR</u><br><br>7 days |
| C. One ESW subsystem inoperable for reasons other than Condition B. | C.1 Restore the ESW subsystem to OPERABLE status. | 14 days during the replacement of the Unit 1 ESW piping[(1)]<br><br><u>OR</u><br><br>7 days |

[(1)]Upon completion of the Unit 1 'A' and 'B' ESW piping replacement, this temporary extension is no longer applicable and will expire on June 25, 2026.

# Enclosure 4 of PLA-7751

# Marked-Up Technical Specification Bases Pages

Revised Technical Specifications Bases Pages

Unit 1 TS Bases Pages
3.7-6, 3.7-6a, 3.7-9, 3.7-10, and 3.7-11

Unit 2 TS Bases Pages
3.7-6, 3.7-6a, 3.7-6b, 3.7-9, 3.7-10, and 3.7-11

(Provided for Information Only)

BASES

ACTIONS (continued)

B.1 (continued)

could result in loss of RHRSW function. The Completion Time is based on the redundant RHRSW capabilities afforded by the OPERABLE subsystem and the low probability of an event occurring requiring RHRSW during this period.

With one RHRSW subsystem inoperable, and the respective Unit 2 RHRSW subsystem capable of supporting the respective Unit 1 RHRSW subsystem, the design basis cooling capacity for both units can still be maintained even considering a single active failure. However, the configuration does reduce the overall reliability of the RHRSW System. Therefore, provided the associated Unit 2 subsystem remains capable of supporting its respective Unit 1 RHRSW subsystem, the inoperable RHRSW subsystem must be restored to OPERABLE status within 7 days. The 7-day Completion Time is based on the remaining RHRSW System heat removal capability.

Additionally, the Completion Time to restore the Unit 1 RHRSW system has been extended to 14 days in order to complete the replacement of a portion of the Unit 2 ESW piping. This is a temporary extension of the Completion Time and is applicable during the Unit 2 ESW piping replacement. When utilizing the temporary Completion Time extension, the 72 hour and 7 day Completion Times do not apply.

In order to cope with the consequences of a LOCA/LOOP in Unit 1 during the extended Completion Time, the following compensatory measure is required: Provisions will be implemented to restore piping integrity to allow use of the Unit 1 RHRSW system within the current LCO Completion Time. Upon completion of the Unit 2 ESW piping replacement, this temporary extension is no longer applicable and will expire on June 25, 2027.

C.1

Required Action C.1 is intended to ensure that appropriate actions are taken if both Unit 1 RHRSW subsystems are inoperable. Although designated and operated as a unitized system, the associated Unit 2 subsystem is directly connected to a common header, which can supply the associated RHR heat exchanger in either unit. With both Unit 1 RHRSW subsystems inoperable, the RHRSW system is still capable of performing its intended design function. However, the loss of an additional RHRSW subsystem on Unit 2 results in the cooling capacity to be less than the minimum required for response to a design basis event. Therefore, the 8-hour Completion Time is appropriate. The 8-hour Completion Time for restoring one RHRSW subsystem to OPERABLE status is based on the Completion Times provided for the RHR suppression pool spray function.

BASES

ACTIONS (continued)

C.1 (continued)

With both Unit 1 RHRSW subsystems inoperable, and both of the Unit 2 RHRSW subsystems capable of supporting their respective Unit 1 RHRSW subsystem, if no additional failures occur which impact the RHRSW System, the remaining OPERABLE Unit 2 subsystems and flow paths provide adequate heat removal capacity following a design basis LOCA. However, capability for this alignment is not assumed in long term containment response analysis and an additional single failure in the RHRSW System could reduce the system capacity below that assumed in the safety analysis.

Therefore, continued operation is permitted only for a limited time. One inoperable subsystem is required to be restored to OPERABLE status within 72 hours. The 72 hour Completion Time for restoring one inoperable RHRSW subsystem to OPERABLE status is based on the fact that the alternate loop is capable of providing the required cooling capability during this time period.

D.1 and D.2

If the RHRSW subsystems cannot be restored to OPERABLE status within the associated Completion Times, or the UHS is determined to be inoperable, the unit must be placed in a MODE in which the LCO does not apply. To achieve this status, the unit must be placed in at least MODE 3 within 12 hours and in MODE 4 within 36 hours. The allowed Completion Times are reasonable, based on operating experience, to reach the required unit conditions from full power conditions in an orderly manner and without challenging unit systems.

SURVEILLANCE REQUIREMENTS

SR 3.7.1.1

This SR verifies the water level to be sufficient for the proper operation of the RHRSW pumps (net positive suction head and pump vortexing are considered in determining this limit). The Surveillance Frequency is controlled under the Surveillance Frequency Control Program.

SR 3.7.1.2

Verification of the UHS temperature, which is the arithmetical average of the UHS temperature near the surface, middle and bottom levels, ensures that the heat removal capability of the ESW and RHRSW Systems are within the assumptions of the DBA analysis. The Surveillance Frequency is controlled under the Surveillance Frequency Control Program.

BASES

APPLICABILITY

In MODES 1, 2, and 3, the ESW System is required to be OPERABLE to support OPERABILITY of the equipment serviced by the ESW System. Therefore, the ESW System is required to be OPERABLE in these MODES.

In MODES 4 and 5, the OPERABILITY requirements of the ESW System is determined by the systems it supports.

ACTIONS

The ACTIONS are modified by a Note indicating that the applicable Conditions of LCO 3.8.1, be entered and Required Actions taken if the inoperable ESW subsystem results in inoperable DGs (i.e., the supply from both subsystems of ESW is secured to the same DG). This is an exception to LCO 3.0.6 because the Required Actions of LCO 3.7.2 do not adequately compensate for the loss of a DG (LCO 3.8.1) due to loss of ESW flow.

A.1

With one ESW pump inoperable in each subsystem, both inoperable pumps must be restored to OPERABLE status within 7 days. With the unit in this condition, the remaining OPERABLE ESW pumps are adequate to perform the ESW heat removal function; however, the overall reliability is reduced because a single failure could result in loss of ESW function. The 7 day Completion Time is based on the remaining ESW heat removal capability and the low probability of an event occurring during this time period.

B.1

With one or both ESW subsystems not capable of supplying ESW flow to two or more DGs, the capability to supply ESW to at least three DGs from each ESW subsystem must be restored within 7 days. With the units in this condition, the remaining ESW flow to DGs is adequate to maintain the full capability of all DGs; however, the overall reliability is reduced because a single failure could result in loss of the multiple DGs. The 7 day Completion Time is based on the fact that all DGs remain capable of responding to an event occurring during this time period.

Additionally, the Completion Time to restore the ESW subsystem has been extended to 14 days in order to complete the replacement of a portion of the Unit 2 ESW piping. This is a temporary extension of the Completion Time and is applicable during the Unit 2 ESW piping replacement. In order to cope with the consequences of a LOCA/LOOP in Unit 1 during the extended Completion Time, the following compensatory action is required: Provisions will be implemented to restore piping integrity to allow the use of the inoperable Unit 1 ESW subsystem within the current LCO Completion Time. Upon completion of the Unit 2 ESW piping replacement, this temporary extension is no longer applicable and will expire on June 25, 2027.

BASES

ACTIONS (continued)

C.1

With one ESW subsystem inoperable for reasons other than Condition B, the ESW subsystem must be restored to OPERABLE status within 7 days. With the unit in this condition, the remaining OPERABLE ESW subsystem is adequate to perform the heat removal function. However, the overall reliability is reduced because a single failure in the OPERABLE ESW subsystem could result in loss of ESW function.

The 7 day Completion Time is based on the redundant ESW System capabilities afforded by the OPERABLE subsystem, the low probability of an accident occurring during this time period, and is consistent with the allowed Completion Time for restoring an inoperable Core Spray Loop, LPCI Pumps and Control Structure Chiller.

Additionally, the Completion Time to restore the ESW subsystem has been extended to 14 days in order to complete the replacement of a portion of the Unit 2 ESW piping. This is a temporary extension of the Completion Time and is applicable during the Unit 2 ESW piping replacement. In order to cope with the consequences of a LOCA/LOOP in Unit 1 during the extended Completion Time, the following compensatory action is required: Provisions will be implemented to restore piping integrity to allow the use of the inoperable Unit 1 ESW subsystem within the current LCO Completion Time. Upon completion of the Unit 2 ESW piping replacement, this temporary extension is no longer applicable and will expire on June 25, 2027.

D.1 and D.2

If the ESW subsystem cannot be restored to OPERABLE status within the associated Completion Time, or both ESW subsystems are inoperable for reasons other than Condition A and B (i.e., three ESW pumps inoperable), the unit must be placed in a MODE in which the LCO does not apply. To achieve this status, the unit must be placed in at least MODE 3 within 12 hours and in MODE 4 within 36 hours. The allowed Completion Times are reasonable, based on operating experience, to reach the required unit conditions from full power conditions in an orderly manner and without challenging unit systems.

BASES

SURVEILLANCE REQUIREMENTS

SR 3.7.2.1

Verifying the correct alignment for each manual, power operated, and automatic valve in each ESW subsystem flow path provides assurance that the proper flow paths will exist for ESW operation. This SR does not apply to valves that are locked, sealed, or otherwise secured in position, since these valves were verified to be in the correct position prior to locking, sealing, or securing. A valve is also allowed to be in the nonaccident position, and yet considered in the correct position, provided it can be automatically realigned to its accident position within the required time.

This SR does not require any testing or valve manipulation; rather, it involves verification that those valves capable of being mispositioned are in the correct position. This SR does not apply to valves that cannot be inadvertently misaligned, such as check valves.

This SR is modified by a Note indicating that isolation of the ESW System to components or systems may render those components or systems inoperable, but does not necessarily affect the OPERABILITY of the ESW System. As such, when all ESW pumps, valves, and piping are OPERABLE, but a branch connection off the main header is isolated, the ESW System is still OPERABLE.

The Surveillance Frequency is controlled under the Surveillance Frequency Control Program.

SR 3.7.2.2

This SR verifies that the automatic valves of the ESW System will automatically switch to the safety or emergency position to provide cooling water exclusively to the safety related equipment during an accident event. This is demonstrated by the use of an actual or simulated initiation signal. This SR also verifies the automatic start capability of the ESW pumps in each subsystem. The Surveillance Frequency is controlled under the Surveillance Frequency Control Program.

REFERENCES

1. FSAR, Chapter 4.

2. FSAR, Chapter 6.

3. Final Policy Statement on Technical Specifications Improvements, July 22, 1993. (58 FR 39132)

BASES

ACTIONS (continued)

B.1 (continued)

exchanger in either unit. The associated Unit 1 subsystem is considered capable of supporting the associated Unit 2 RHRSW subsystem when the Unit 1 subsystem is OPERABLE and can provide the assumed flow to the Unit 2 heat exchanger. A Completion time of 72 hours, when the associated Unit 1 RHRSW subsystem is not capable of supporting the associated Unit 2 RHRSW subsystem, is allowed to restore the Unit 2 RHRSW subsystem to OPERABLE status. In this configuration, the remaining OPERABLE Unit 2 RHRSW subsystem is adequate to perform the RHRSW heat removal function. However, the overall reliability is reduced because a single failure in the OPERABLE RHRSW subsystem could result in loss of RHRSW function. The Completion Time is based on the redundant RHRSW capabilities afforded by the OPERABLE subsystem and the low probability of an event occurring requiring RHRSW during this period.

The Completion Time to restore the Unit 2 RHRSW subsystem has been extended to 7 days in order to complete the replacement of the Unit 1 480 V ESS Load Center Transformers 1X210 and 1X220. This is a temporary extension of the Completion Time and is applicable during the transformer replacement. The Unit 2 RHRSW subsystem remains functional since the subsystem has an operable pump, operable flow path and an operable UHS. Upon completion of the transformer replacements, this temporary extension is no longer applicable and will expire on June 15, 2020.

Additionally, the Completion Time to restore the Unit 2 RHRSW system has been extended to 14 days in order to complete the replacement of a portion of the Unit 1 ESW piping. This is a temporary extension of the Completion Time and is applicable during the Unit 1 ESW piping replacement. When utilizing the temporary Completion Time extension, the 72 hour and 7 day Completion Times do not apply.

In order to cope with the consequences of a LOCA/LOOP in Unit 2 during the extended Completion Time, the following compensatory measure is required: Provisions will be implemented to restore piping integrity to allow use of the Unit 2 RHRSW system within the current LCO Completion Time. Upon completion of the Unit 1 ESW piping replacement, this temporary extension is no longer applicable and will expire on June 25, 2026.

With one RHRSW subsystem inoperable, and the respective Unit 1 RHRSW subsystem capable of supporting the respective Unit 2 RHRSW subsystem, the design basis cooling capacity for both units can still be maintained even considering a single active failure. However, the configuration does reduce the overall reliability of the RHRSW System. Therefore, provided the associated Unit 1 subsystem remains capable of supporting its respective Unit 2 RHRSW subsystem, the inoperable RHRSW subsystem must be

BASES

ACTIONS (continued)

B.1 (continued)

restored to OPERABLE status within 7 days. The 7-day Completion Time is based on the remaining RHRSW System heat removal capability.

C.1

Required Action C.1 is intended to ensure that appropriate actions are taken if both Unit 2 RHRSW subsystems are inoperable. Although designated and operated as a unitized system, the associated Unit 1 subsystem is directly connected to a common header which can supply the associated RHR heat exchanger in either unit. With both Unit 2 RHRSW subsystems inoperable, the RHRSW system is still capable of performing its intended design function. However, the loss of an additional RHRSW subsystem on Unit 1 results in the cooling capacity to be less than the minimum required for response to a design basis event. Therefore, the 8-hour Completion Time is appropriate. The 8-hour Completion Time for restoring one RHRSW subsystem to OPERABLE status, is based on the Completion Times provided for the RHR suppression pool spray function.

With both Unit 2 RHRSW subsystems inoperable, and both of the Unit 1 RHRSW subsystems capable of supporting their respective Unit 2 RHRSW subsystem, if no additional failures occur which impact the RHRSW System, the remaining OPERABLE Unit 1 subsystems and flow paths provide adequate heat removal capacity following a design basis LOCA. However, capability for this alignment is not assumed in long term containment response analysis and an additional single failure in the RHRSW System could reduce the system capacity below that assumed in the safety analysis.

Therefore, continued operation is permitted only for a limited time. One inoperable subsystem is required to be restored to OPERABLE status within 72 hours. The 72 hour Completion Time for restoring one inoperable RHRSW subsystem to OPERABLE status is based on the fact that the alternate loop is capable of providing the required cooling capability during this time period.

D.1 and D.2

If the RHRSW subsystems cannot be restored to OPERABLE status within the associated Completion Times, or the UHS is determined to be inoperable, the unit must be placed in a MODE in which the LCO does not apply. To achieve this status, the unit must be placed in at least MODE 3 within 12 hours and in MODE 4 within 36 hours. The allowed Completion Times are reasonable, based on operating experience, to reach the required unit conditions from full power conditions in an orderly manner and without challenging unit systems.

BASES

SURVEILLANCE REQUIREMENTS

SR 3.7.1.1

This SR verifies the water level to be sufficient for the proper operation of the RHRSW pumps (net positive suction head and pump vortexing are considered in determining this limit). The Surveillance Frequency is controlled under the Surveillance Frequency Control Program.

SR 3.7.1.2

Verification of the UHS temperature, which is the arithmetical average of the UHS temperature near the surface, middle and bottom levels, ensures that the heat removal capability of the ESW and RHRSW Systems are within the assumptions of the DBA analysis. The Surveillance Frequency is controlled under the Surveillance Frequency Control Program.

SR 3.7.1.3

Verifying the correct alignment for each manual, power operated, and automatic valve in each RHRSW subsystem flow path provides assurance that the proper flow paths will exist for RHRSW operation. This SR does not apply to valves that are locked, sealed, or otherwise secured in position, since these valves are verified to be in the correct position prior to locking, sealing, or securing. A valve is also allowed to be in the nonaccident position, and yet considered in the correct position, provided it can be realigned to its accident position. This is acceptable because the RHRSW System is a manually initiated system.

This SR does not require any testing or valve manipulation; rather, it involves verification that those valves capable of being mispositioned are in the correct position. This SR does not apply to valves that cannot be inadvertently misaligned, such as check valves.

The Surveillance Frequency is controlled under the Surveillance Frequency Control Program.

SR 3.7.1.4

The UHS spray array bypass valves are required to actuate to the closed position for the UHS to perform its design function. These valves receive an automatic signal to open upon emergency service water (ESW) or residual heat removal service water (RHRSW) system pump start and are required to be operated from the control room or the remote shutdown panel. A spray bypass valve is considered to be inoperable when it cannot be closed on

BASES

ACTIONS

The ACTIONS are modified by a Note indicating that the applicable Conditions of LCO 3.8.1, be entered and Required Actions taken if the inoperable ESW subsystem results in inoperable DGs (i.e., the supply from both subsystems of ESW is secured to the same DG). This is an exception to LCO 3.0.6 because the Required Actions of LCO 3.7.2 do not adequately compensate for the loss of a DG (LCO 3.8.1) due to loss of ESW flow.

A.1

With one ESW pump inoperable in each subsystem, both inoperable pumps must be restored to OPERABLE status within 7 days. With the unit in this condition, the remaining OPERABLE ESW pumps are adequate to perform the ESW heat removal function; however, the overall reliability is reduced because a single failure could result in loss of ESW function. The 7 day Completion Time is based on the remaining ESW heat removal capability and the low probability of an event occurring during this time period.

B.1

With one or both ESW subsystems not capable of supplying ESW flow to two or more DGs, the capability to supply ESW to at least three DGs from each ESW subsystem must be restored within 7 days. With the units in this condition, the remaining ESW flow to DGs is adequate to maintain the full capability of all DGs; however, the overall reliability is reduced because a single failure could result in loss of the multiple DGs. The 7 day Completion Time is based on the fact that all DGs remain capable of responding to an event occurring during this time period.

Additionally, the Completion Time to restore the ESW subsystem has been extended to 14 days in order to complete the replacement of a portion of the Unit 1 ESW piping. This is a temporary extension of the Completion Time and is applicable during the Unit 1 ESW piping replacement. In order to cope with the consequences of a LOCA/LOOP in Unit 2 during the extended Completion Time, the following compensatory action is required: Provisions will be implemented to restore piping integrity to allow the use of the inoperable Unit 2 ESW subsystem within the current LCO Completion Time. Upon completion of the Unit 1 ESW piping replacement, this temporary extension is no longer applicable and will expire on June 25, 2026.

BASES

ACTIONS (continued)

C.1

With one ESW subsystem inoperable for reasons other than Condition B, the ESW subsystem must be restored to OPERABLE status within 7 days. With the unit in this condition, the remaining OPERABLE ESW subsystem is adequate to perform the heat removal function. However, the overall reliability is reduced because a single failure in the OPERABLE ESW subsystem could result in loss of ESW function.

The 7 day Completion Time is based on the redundant ESW System capabilities afforded by the OPERABLE subsystem, the low probability of an accident occurring during this time period, and is consistent with the allowed Completion Time for restoring an inoperable Core Spray Loop, LPCI pumps and Control Structure Chiller.

Additionally, the Completion Time to restore the ESW subsystem has been extended to 14 days in order to complete the replacement of a portion of the Unit 1 ESW piping. This is a temporary extension of the Completion Time and is applicable during the Unit 1 ESW piping replacement. In order to cope with the consequences of a LOCA/LOOP in Unit 2 during the extended Completion Time, the following compensatory action is required: Provisions will be implemented to restore piping integrity to allow the use of the inoperable Unit 2 ESW subsystem within the current LCO Completion Time. Upon completion of the Unit 1 ESW piping replacement, this temporary extension is no longer applicable and will expire on June 25, 2026.

D.1 and D.2

If the ESW subsystem cannot be restored to OPERABLE status within the associated Completion Time, or both ESW subsystems are inoperable for reasons other than Condition A and B (i.e., three ESW pumps inoperable), the unit must be placed in a MODE in which the LCO does not apply. To achieve this status, the unit must be placed in at least MODE 3 within 12 hours and in MODE 4 within 36 hours. The allowed Completion Times are reasonable, based on operating experience, to reach the required unit conditions from full power conditions in an orderly manner and without challenging unit systems.

BASES

SURVEILLANCE REQUIREMENTS

SR 3.7.2.1

Verifying the correct alignment for each manual, power operated, and automatic valve in each ESW subsystem flow path provides assurance that the proper flow paths will exist for ESW operation. This SR does not apply to valves that are locked, sealed, or otherwise secured in position, since these valves were verified to be in the correct position prior to locking, sealing, or securing. A valve is also allowed to be in the nonaccident position, and yet considered in the correct position, provided it can be automatically realigned to its accident position within the required time. This SR does not require any testing or valve manipulation; rather, it involves verification that those valves capable of being mispositioned are in the correct position. This SR does not apply to valves that cannot be inadvertently misaligned, such as check valves.

This SR is modified by a Note indicating that isolation of the ESW System to components or systems may render those components or systems inoperable, but does not necessarily affect the OPERABILITY of the ESW System. As such, when all ESW pumps, valves, and piping are OPERABLE, but a branch connection off the main header is isolated, the ESW System is still OPERABLE.

The Surveillance Frequency is controlled under the Surveillance Frequency Control Program.

SR 3.7.2.2

This SR verifies that the automatic valves of the ESW System will automatically switch to the safety or emergency position to provide cooling water exclusively to the safety related equipment during an accident event. This is demonstrated by the use of an actual or simulated initiation signal. This SR also verifies the automatic start capability of the ESW pumps in each subsystem.

The Surveillance Frequency is controlled under the Surveillance Frequency Control Program.

REFERENCES

1. FSAR, Chapter 4.

2. FSAR, Chapter 6.

3. Final Policy Statement on Technical Specifications Improvements, July 22, 1993 (58 FR 39132)

# Enclosure 5 of PLA-7751

# List of Regulatory Commitments

**Regulatory Commitments Contained in this Correspondence**

The following table identifies actions committed to in this document. Any other statements in this submittal are provided for information purposes and are not considered to be regulatory commitments.

| # | Regulatory Commitment | Due Date |
|---|---|---|
| 7751-1 | Susquehanna commits to implement the compensatory measures identified in Section 3.3 of Enclosure 1 to PLA-7751 during the Emergency Service Water (ESW) System piping replacement. | During performance of the ESW System piping replacement. |