Energy*Solutions*, Inc.
Technical Support Document

LC-FS-TSD-001

Use of ISOCS for FSS of End State Sub Structures at LACBWR

Revision 0

Originator: _____ Date: 4/28/17
Pete Hollenbeck

Reviewer: _____ Date: 4/28/17
David Fauver

Reviewer: _____ Date: 5/1/2017
Joe Jacobsen

Approval: _____ Date: 5/1/2017
Robert Yetter

Summary of Changes in this Revision:

- Rev. 0 –Initial issuance.

Table of Contents

1. PURPOSE 4
2. DISCUSSION 4
   2.1. Application of ISOCS in the Final Status Survey 4
   2.2. ISOCS Geometry Composer Software 6
3. ISOCS GEOMETRIES FOR FINAL STATUS SURVEYS 8
   3.1. Reactor Building Basement 8
   3.2. Waste Gas Tank Vault 8
   3.3. Remaining Structures 8
   3.4. Conclusion 8
4. SENSITIVITY TO NON-UNIFORM AREAL CONTAMINATION 8
5. MINIMUM DETECTABLE CS-137 CONCENTRATION OF THE CIRCULAR PLANE MODEL 10
6. CONCLUSIONS 10
7. REFERENCES 10
8. ATTACHMENTS 11

List of Tables

Table 1 – Non-uniform Contamination Efficiency Results 9
Table 2 - Comparison of the Circular Plane Model Cs-137 MDC to Sub Structure DCGLs 10

List of Figures

Figure 1 - 90 Degree Collimator Field of View (FOV) 6
Figure 2 - ISOCS Geometry Composer Circular Plane Template 7

1. PURPOSE

The primary purpose of this Technical Support Document (TSD) is to describe the efficiency calibration methods and use of in-situ gamma spectroscopy to perform the Final Status Surveys (FSS) of the LaCrosse Boiling Water Reactor (LACBWR) end state sub-structures. This TSD also provides a general description of the in-situ gamma spectroscopy system application during FSS including nominal minimum detectable concentration (MDC) values.

As described in the LACBWR License Termination Plan (LTP) [Reference 1], the objective of the FSS is to demonstrate that the residual radioactivity in each end state sub-structure at the time of license termination is below the Derived Concentration Guideline Levels (DCGL) for the Radionuclides of Concern (ROC) using a Sum of Fractions (SOF) approach. The FSS will be performed with the Canberra *In-Situ* Object Counting System (ISOCS) gamma spectroscopy system.

The efficiency calibrations presented in this TSD are based on the initial characterization data and are expected to be applicable to the conditions at the time of the FSS. However, further characterization will be performed to validate and adjust, if necessary, the geometries. Final Status Survey measurements with the ISOCS can proceed before continuing characterization is completed using efficiency curves based on the initial characterization data. The release record will include a discussion of the basis for the efficiency curve selected and a review of applicable continuing characterization data completed after the ISOCS FSS measurements were performed. The efficiency curve used for the final analysis of the ISOCS FSS data will be based upon the analysis of all the characterization data.

The efficiency calibrations are intended to be conservative. The efficiency calibrations assume a uniform areal distribution of residual radioactivity. The effects of non-uniform areal contamination is also evaluated to ensure that a conservative estimate of the ROC concentration over the ISOCS Field of View (FOV) will be calculated.

2. DISCUSSION

2.1. Application of ISOCS in the Final Status Survey

As described in LACBWR LTP Chapter 6, the DCGLs in Table 5-3 in Chapter 5 of the LTP in each sub-structure is the metric that will be used to demonstrate compliance with the 25 mrem/yr dose criterion in 10 CFR 20.1402.

For survey planning purposes and the assessments provided in this TSD, the assumed configuration of the ISOCS system during FSS is a three-meter distance from the surface to be measured with a 90 degree, 50 mm lead collimator. This results in a 28.3 m^2 field of view. This configuration may be changed as necessary depending on actual conditions encountered during FSS.

Consistent with the graded approach recommended in the Multi Agency Radiation Survey and Site Investigation Manual (MARSSIM) [Reference 2], the number of ISOCS measurements in each sub-structure is a function of the potential for residual radioactivity to be present (see LTP Chapter 5). The remaining substructures are designated as Class 1 and will have ISOCS measurements performed over 100% of the surface.

The source term geometry, i.e., concentration depth profile and areal distribution of the residual radioactivity in structures, is required to generate efficiency curves (i.e., efficiency as a function of energy) for the ISOCS gamma spectroscopy measurements. The concrete cores obtained during characterization, as described in LTP Chapter 2, provide information regarding the distribution of activity with depth for each structure. The areal distribution is assumed to be uniform for the efficiency calibration. The effect of non-uniform areal contamination is evaluated separately in Section 4.

The sub-structures that will remain at license termination include:

- The basements of the Reactor Building (612 and 621 foot elevations),
- Waste Gas Tank Vault (618 and 621 foot elevations), and
- The Remaining Structures (including the Reactor/Generator Plant, the one foot thick portion of the Chimney Foundation, the Turbine sump and the Turbine Pit).

The characterization data is documented in LTP Chapter 2 and analyzed in the following TSDs:

- Technical Support Document RS-TD-313196-002, La Crosse End State Basement Concrete Surface Areas, Volumes, and Void Spaces,
- Technical Support Document RS-TD-313196-004, LACBWR Soil DCGL and Basement Concrete DCGLs.

Characterization of the structural surfaces of basements that will remain at the "end-state" consisted primarily of the acquisition and radiological analysis of concrete core samples from the concrete foundation walls and basement floors of the Reactor Building, Waste Treatment Building (WTB) floor and the Piping Tunnel floor. In June and July of 2015, a series of concrete core samples were taken from the 615 foot elevation concrete floor and the concrete floor and east wall on the 621 foot elevation in the Reactor Building, the 630 foot elevation concrete floor of the Waste Treatment Building (WTB) and the 633 foot elevation concrete floor of the Piping Tunnel. The locations where the core samples were taken are presented in LTP Chapter 2. A total of twelve (12) concrete core samples were collected, six (6) in the Reactor Building, three (3) in the WTB and three (3) in the Piping Tunnel.

The locations selected for the concrete core sampling were biased toward locations where physical or observed radiological measurements indicated the presence of fixed and/or volumetric contamination of the concrete media. When possible, locations were determined based upon elevated observed contact dose rates or count rates. In addition, visual observations of floor and wall surfaces were used to identify potential locations of surface contamination, such as discoloration or standing water. The goal was to identify, to the extent possible, the locations that exhibited the highest potential of representing the worst case bounding radiological condition for concrete in each survey unit. This judgmental sampling approach also ensured there was sufficient source term in the cores to achieve the sensitivities required to determine the radionuclide fractions of gamma emitters.

2.2. ISOCS Geometry Composer Software

The ISOCS Geometry Composer Software contains two relevant geometry templates for the FSS that allow the physical parameters of the measurement to be entered to determine the efficiency curves; the Exponential Circular Plane (ECP) and Circular Plane (CP) templates. Based upon the data presented in LTP Chapters 2 and 5, only the Circular Plane template should be needed to perform measurements in end state sub-structures.

The circular plane template allows the radioactivity to be distributed in any manner in up to ten layers of sources/ absorbers (i.e., Items 2 through 11 in Figure 2). Item 1.1, wall thickness, is set to zero for end state sub-structure floors and walls. Item 1.2 is the circular plane diameter which will typically be set to 6.0 meters when the source to detector distance is set to 3.0 meters (Item 14.1).

A generic circular plane geometry is shown in Figure 1.

Figure 1 - 90 Degree Collimator Field of View (FOV)

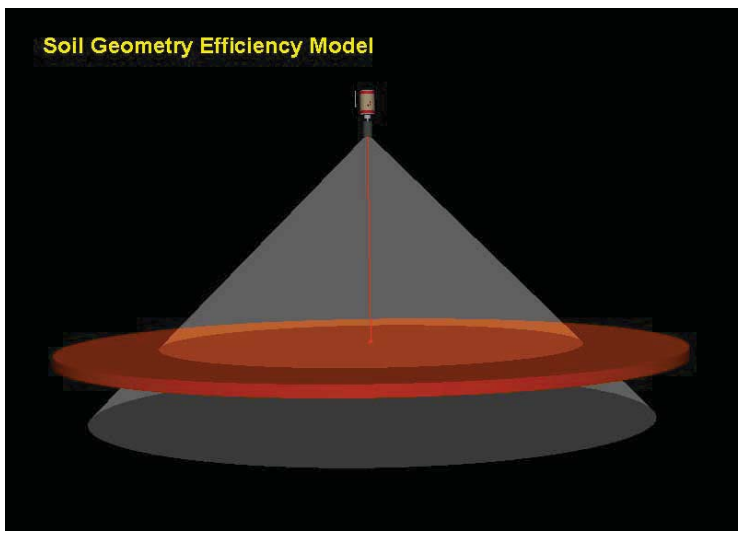

Figure 2 shows the circular plane template input parameters.

Figure 2 - ISOCS Geometry Composer Circular Plane Template

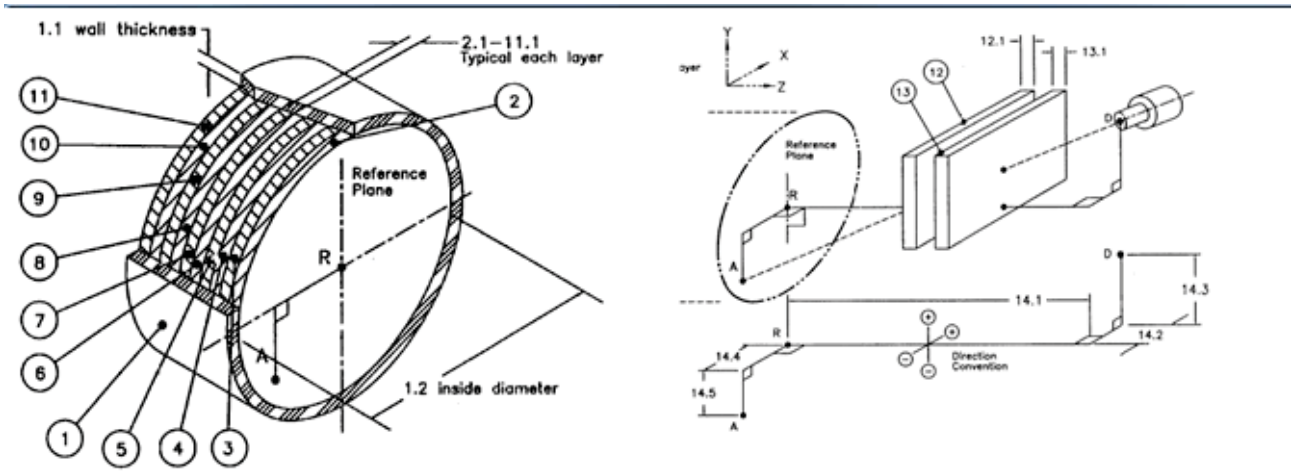

Description:

Comment:

Units: mm cm m in ft

No.	Description	d.1	d.2	d.3	d.4	d.5	Material	Density	Rel. Conc.
1	Side Walls	0	0					0	
2	Layer 1	0						0	0.00
3	Layer 2	0						0	0.00
4	Layer 3	0						0	0.00
5	Layer 4	0						0	0.00
6	Layer 5	0						0	0.00
7	Layer 6	0						0	0.00
8	Layer 7	0						0	0.00
9	Layer 8	0						0	0.00
10	Layer 9	0						0	0.00
11	Layer 10	0						0	0.00
12	Absorber 1	0						0	
13	Absorber 2	0						0	
14	Source-Detector	0	0	0	0	0			

3. ISOCS GEOMETRIES FOR FINAL STATUS SURVEYS

3.1. Reactor Building Basement

Concrete cores were taken at six locations at the 615 foot and 621 foot elevations. Analysis of the 1/2 inch pucks show that contamination is limited to the top 1 inch.

3.2. Waste Gas Tank Vault

No samples were taken in the vault. However, process knowledge indicates minimal source term in the concrete. This assumption will be confirmed by continuing characterization or at the time of the FSS.

3.3. Remaining Structures

Concrete core samples were taken at three locations in the Piping and Ventilation Tunnel floor. Analysis of the 1/2 inch pucks show that contamination is limited to the top 1/2 inch.

3.4. Conclusion

Based upon information presented in LTP Chapters 4 and 5, a Contamination Verification Survey (CVS) will be performed on all remaining sub-structural surfaces to ensure levels meet the open-air demolition limits and the DCGL as measured by ISOCS.

The entire source term in the Reactor Building basement will be removed. All concrete will be removed to expose the steel liner. In addition, the steel liner will also be removed. The only residual radioactivity that should remain in the Reactor Building basement is contaminated concrete dust remaining from the demolition process. In addition, it is anticipated that a layer of concrete will be removed from the Waste Treatment Building floor to remove non-radiological contaminants.

Therefore, a simple circular plane geometry with a single 1/2 inch layer of contamination could be used for most end state sub-structure Final Status Surveys. Final characterization data will be needed to verify these assumptions. An example of the 1/2 inch geometry is presented in Attachment 1.

4. SENSITIVITY TO NON-UNIFORM AREAL CONTAMINATION

The development and use of the circular plane geometry discussed above assumes that the residual radioactivity is uniformly distributed over the ISOCS FOV. This section evaluates the effect of non-uniform areal contamination on the calculation of total activity using ISOCS. This section replicates the evaluations performed in the Zion ISOCS TSD [Reference 3].

To determine the effect of non-uniform contamination, two sets of three circular plane geometry templates (all with a contamination depth of 1.27cm) were developed. The first set assumed that the contaminated area was limited to a 1 m^2 circular area as opposed to the full 28.3 m^2 field of view. The location of the 1 m^2 areas were defined by three offset distances from the detector centerline which were 0cm, 122cm, and 244cm. The 244cm offset places the 1m^2 area at the edge of the 28.3 m^2 field of view (i.e., the furthest distance from the detector). The second set of non-uniform distributions evaluated assumed that the contaminated area was a 0.5 m^2 circular area with offset distances from the centerline of 0cm, 130cm and 260cm.

Efficiency files were generated for each configuration. The relevant excerpts from the geometry composer model report and results reports are provided in Attachment 2 and summarized in Table 1.

Inspection of Table 1 data shows that the Cs-137 efficiencies for single 1.0 m^2 areas of contamination exceed the uniform circular plane efficiency by a factor of 2.43 and 1.59 at offset distances of 0 cm and 122cm, respectively. At a distance of 187cm, the efficiencies of the uniform and 1 m^2 area are equal. At offset distances greater than 187cm, the 1 m^2 area efficiencies are less than the uniform. In summary, a 1 m^2 area with a center that is offset less than 187cm would result in overestimating the total activity when using the uniform circular plane efficiency and 1 m^2 spots with offsets greater than 187cm would result in an underestimate. The same general analysis applies to the 0.5 m^2 area spots. The 0.5 m^2 spot efficiency equals the uniform circular plane efficiency at the same offset distance of 187cm.

Table 1 – Non-uniform Contamination Efficiency Results

Energy (KeV)	Uniform Efficiency	1 m^2 0 cm Offset	1 m^2 122 cm Offset	1 m^2 244 cm Offset	0.5 m^2 0 cm Offset	0.5 m^2 130 cm Offset	0.5 m^2 260 cm Offset
661.6	2.24E-06	5.43E-06	3.57E-06	1.39E-06	5.58E-06	3.42E-06	1.20E-06
Ratio to Uniform	1.00	2.43	1.59	0.62	2.49	1.53	0.54
Area-Weighted Average		1.2			1.1		

The area weighting was performed by calculating the circular areas inside and outside of the offset distance where the uniform efficiencies and the spot efficiencies are equal, i.e., 187cm. The ratios for offset distances less than the "equal distance" were averaged and applied to the inside circular area. The single ratio with an offset greater than the "equal distance" was applied to the circular area outside of the "equal distance".

Calculating an area-weighted average 1 m^2 spot efficiency from the ratio data in Table 1 shows that if several 1 m^2 spots were randomly distributed in the ISOCS measurement FOV, the effective efficiency would be a factor of 1.2 times higher than the uniform circular plane efficiency. This would result in an overestimate of total activity if the ISOCS spectrums were analyzed with the uniform circular plane efficiency. The area-weighted average 0.5 m^2 spot efficiency of randomly distributed 0.5 m^2 spots is a factor of 1.1 times higher than the uniform circular plane efficiency and would also result in an overestimate of total activity if the ISOCS spectrums were analyzed with the uniform circular plane efficiency.

The analyses above assume that there is no contamination present in the FOV other than a single hot spot at the distances shown. Any increase in the number and areal extent of contamination beyond the single 1 m^2 and 0.5 m^2 areas assumed in Table 1, up to full uniform contamination over the entire 28 m^2 FOV would result in a convergence between non-uniform and uniform efficiencies.

The distribution and location of non-uniform elevated areas are expected to be randomly located with equal probability of being at any distance from the detector centerline. In addition, the sub

structures are expected to contain very low levels of residual radioactivity at license termination. Therefore, based upon the evaluations presented in this section, no efficiency adjustment for potential non-uniform areal contamination is considered necessary.

5. MINIMUM DETECTABLE CS-137 CONCENTRATION OF THE CIRCULAR PLANE MODEL

A 600 second spectrum of clean concrete (G1 North Wall) was collected with the 90-degree collimator in place at a distance of 3 meters from the surface of the wall. The spectrum was analyzed using the uniform contamination geometry presented in Attachment 1. The ISOCS MDC report of the analyzed spectrum is provided in Attachment 3.

The calculated MDC was then compared to the sub structure DCGLs, presented in Table 5-3 of the LTP. Table 2 provides the results of the calculations which show that the MDC ranges from 0.03% to 0.08% of the limits.

Table 2 - Comparison of the Circular Plane Model Cs-137 MDC to Sub Structure DCGLs

Structure	Cs-137 $DCGL_B$ (pCi/m^2)	Cs-137 MDC (pCi/m^2)	% of $DCGL_B$
Reactor Building	1.05E+08	2.76E+04	0.03%
WGTV	3.29E+07	2.76E+04	0.08%
Remaining Basements	4.60E+07	2.76E+04	0.06%

6. CONCLUSIONS

1. The ISOCS gamma spectroscopy hardware and software can be used to perform the FSS of the LACBWR end state sub-structures.
2. Evaluation of a 600 second spectrum of clean concrete, assuming uniform contamination at a depth of 1.27cm in the concrete, show that the MDC of the analysis is less than 1% of the corresponding DCGL.
3. No adjustment to the ISOCS efficiency calibrations are necessary to account for isolated spots of contamination.
4. Additional concrete core samples should be collected after end state sub-structure remediation or in end state sub-structures that have not been previously evaluated, to provide validation to the final FSS ISOCS geometries.

7. REFERENCES

1. LaCrosse Boiling Water Reactor License Termination Plan Revision 0.
2. NUREG-1575, Rev.1, Multi-Agency Radiation Survey and Site Investigation Manual (MARSSIM), August 2000.
3. Zion TSD 14-022, Use of In-Situ Gamma Spectroscopy for Source Term Survey of End State Structures, Revision 0.

8. ATTACHMENTS

Attachment 1 - Example of the Circular Plane Geometry

Attachment 2 – Non-uniform Hot Spot Efficiencies

Attachment 3 – Minimum Detectable Concentrations

Attachment 1 Example of the Circular Plane Geometry

Geometry Composer Report

Date: Thursday, December 08, 2016 - 15:40:26
Description: LaCrosse STS concrete example.
Comment: Detector at 3 meters from surface with 90 degree collimator.
File Name: C:\GENIE2K\isocs\data\GEOMETRY\In-Situ\CIRCULAR_PLANE\LaCrosse STS of concrete example.geo
Software: ISOCS
Template: CIRCULAR_PLANE, Version: (default)
Detector: 3844f
Collimator: 50mm-90d new (newISOCS 50mm side 90deg collimation [large hole collimator])
Environment: Temperature = 22 °C, Pressure = 760 mm Hg, Relative Humidity = 30%
Integration: Convergence = 1.00%, MDRPN = 2^4 (16), CRPN = 2^4 (16)

Dimensions (cm)

No.	Description	d.1	d.2	d.3	d.4	d.5	d.6	Material	Density	Rel. Conc.
1	Side Walls	0	600					none		
2	Layer 1	1.27						concrete	2.3	1.00
3	Layer 2	0						none		
4	Layer 3	0						<none>		
5	Layer 4	0						<none>		
6	Layer 5	0						<none>		
7	Layer 6	0						<none>		
8	Layer 7	0						<none>		
9	Layer 8	0						<none>		
10	Layer 9	0						<none>		
11	Layer 10	0						<none>		
12	Absorber1	0.3						hpolyeth	0.95	
13	Absorber2									
14	Source-Detector	300	0	0	0	0				

List of energies for efficiency curve generation

59.5 88.0 122.1 200.0 400.0 661.7 900.0 1000.0
1173.2 1332.5 1836.0

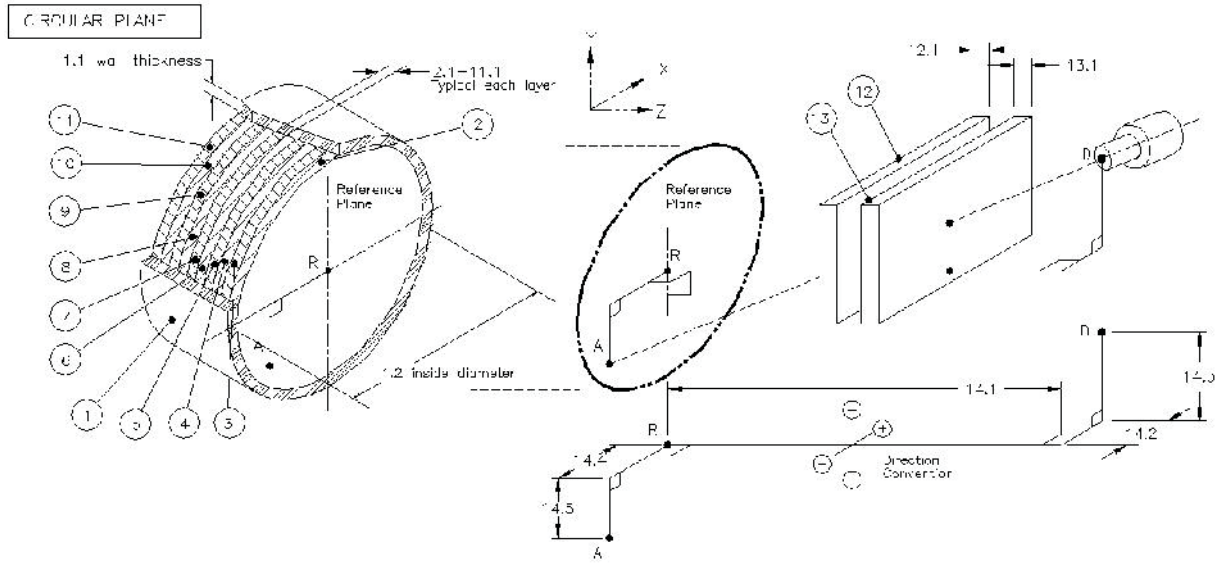

Geometry Composer Report

Date: Thursday, December 08, 2016 - 15:40:26
Description: LaCrosse STS concrete example.
Comment: Detector at 3 meters from surface with 90 degree collimator.
File Name: C:\GENIE2K\isocs\data\GEOMETRY\In-Situ\CIRCULAR_PLANE\LaCrosse STS of concrete example.geo
Software: ISOCS
Template: CIRCULAR_PLANE, Version: (default)

Attachment 2 Non-uniform Hot Spot Efficiencies

Geometry Composer Report

Date: Friday, December 09, 2016 - 16:17:46
Description: 1 square meter hot spot at 0cm offset
Comment: for testing non-uniform contamination
File Name: C:\GENIE2K\isocs\data\GEOMETRY\In-Situ\CIRCULAR_PLANE\1 sq meter - 0 offset.geo
Software: ISOCS
Template: CIRCULAR_PLANE, Version: (default)
Detector: 3844f
Collimator: 50mm-90d new (newISOCS 50mm side 90deg collimation [large hole collimator])
Environment: Temperature = 22 °C, Pressure = 760 mm Hg, Relative Humidity = 30%
Integration: Convergence = 1.00%, MDRPN = 2^4 (16), CRPN = 2^4 (16)

Dimensions (cm)

No.	Description	d.1	d.2	d.3	d.4	d.5	d.6	Material	Density	Rel. Conc.
1	Side Walls	0	113					none		
2	Layer 1	1.27						concrete	2.3	1.00
3	Layer 2	0						<none>		
4	Layer 3	0						<none>		
5	Layer 4	0						<none>		
6	Layer 5	0						<none>		
7	Layer 6	0						<none>		
8	Layer 7	0						<none>		
9	Layer 8	0						<none>		
10	Layer 9	0						<none>		
11	Layer 10	0						<none>		
12	Absorber1	0.3						hpolyeth	0.95	
13	Absorber2									
14	Source-Detector	300	0	0	0	0				

List of energies for efficiency curve generation

59.5 88.0 122.1 165.9 391.7 661.7 898.0 1173.2
1332.5 1836.0

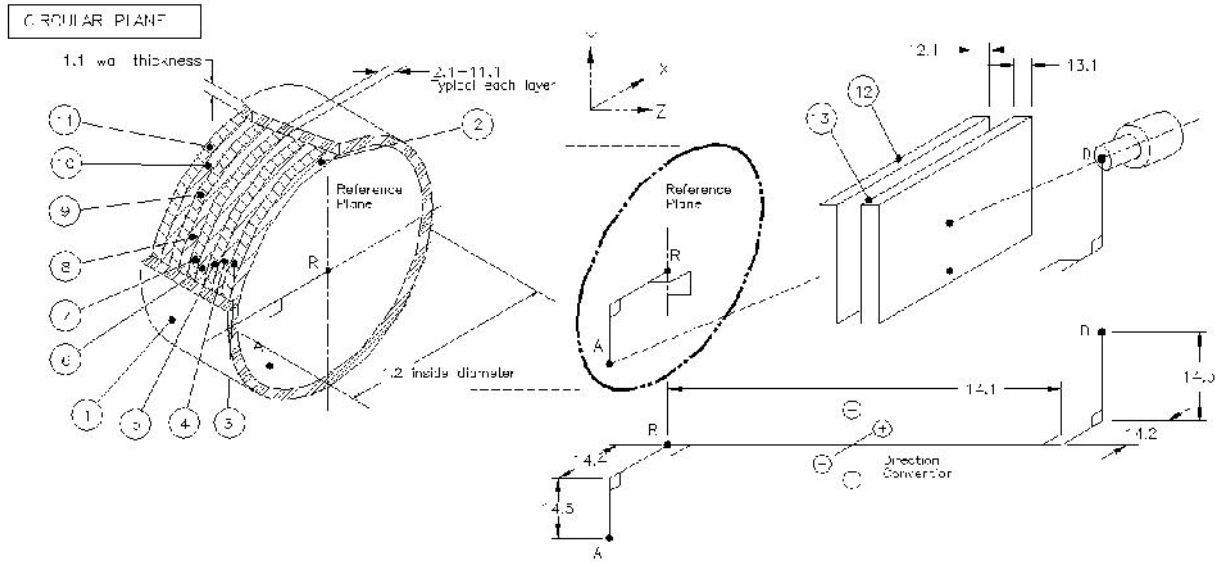

Geometry Composer Report

Date: Friday, December 09, 2016 - 16:17:46
Description: 1 square meter hot spot at 0cm offset
Comment: for testing non-uniform contamination
File Name: C:\GENIE2K\isocs\data\GEOMETRY\In-Situ\CIRCULAR_PLANE\1 sq meter - 0 offset.geo
Software: ISOCS
Template: CIRCULAR_PLANE, Version: (default)

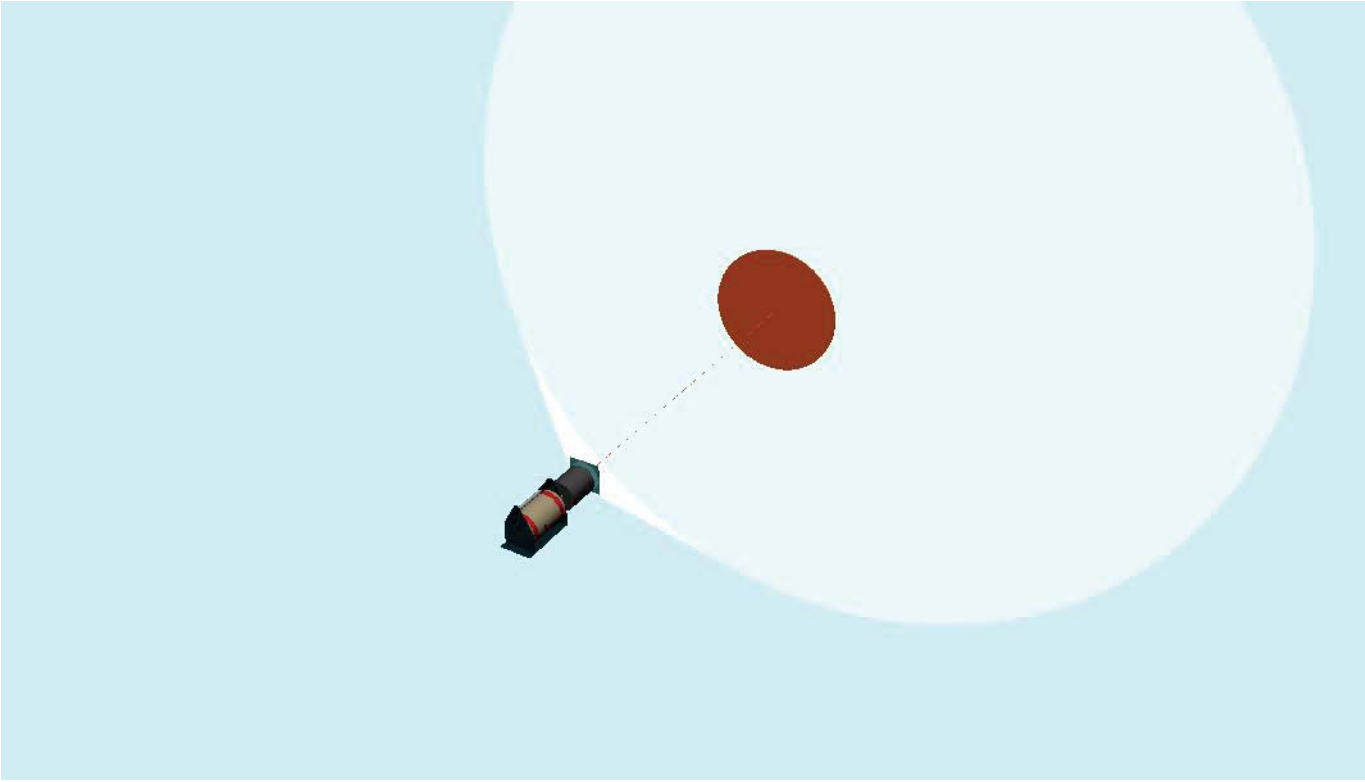

Geometry Composer Report

Date: Friday, December 09, 2016 - 16:19:06
Description: 1 square meter hot spot at 122cm offset
Comment: for testing non-uniform contamination
File Name: C:\GENIE2K\isocs\data\GEOMETRY\In-Situ\CIRCULAR_PLANE\1 sq meter - 122cm offset.geo
Software: ISOCS
Template: CIRCULAR_PLANE, Version: (default)
Detector: 3844f
Collimator: 50mm-90d new (newISOCS 50mm side 90deg collimation [large hole collimator])
Environment: Temperature = 22 °C, Pressure = 760 mm Hg, Relative Humidity = 30%
Integration: Convergence = 1.00%, MDRPN = 2^4 (16), CRPN = 2^4 (16)

Dimensions (cm)

No.	Description	d.1	d.2	d.3	d.4	d.5	d.6	Material	Density	Rel. Conc.
1	Side Walls	0	113					none		
2	Layer 1	1.27						concrete	2.3	1.00
3	Layer 2	0						<none>		
4	Layer 3	0						<none>		
5	Layer 4	0						<none>		
6	Layer 5	0						<none>		
7	Layer 6	0						<none>		
8	Layer 7	0						<none>		
9	Layer 8	0						<none>		
10	Layer 9	0						<none>		
11	Layer 10	0						<none>		
12	Absorber1	0.3						hpolyeth	0.95	
13	Absorber2									
14	Source-Detector	300	122	0	122	0				

List of energies for efficiency curve generation

59.5 88.0 122.1 165.9 391.7 661.7 898.0 1173.2
1332.5 1836.0

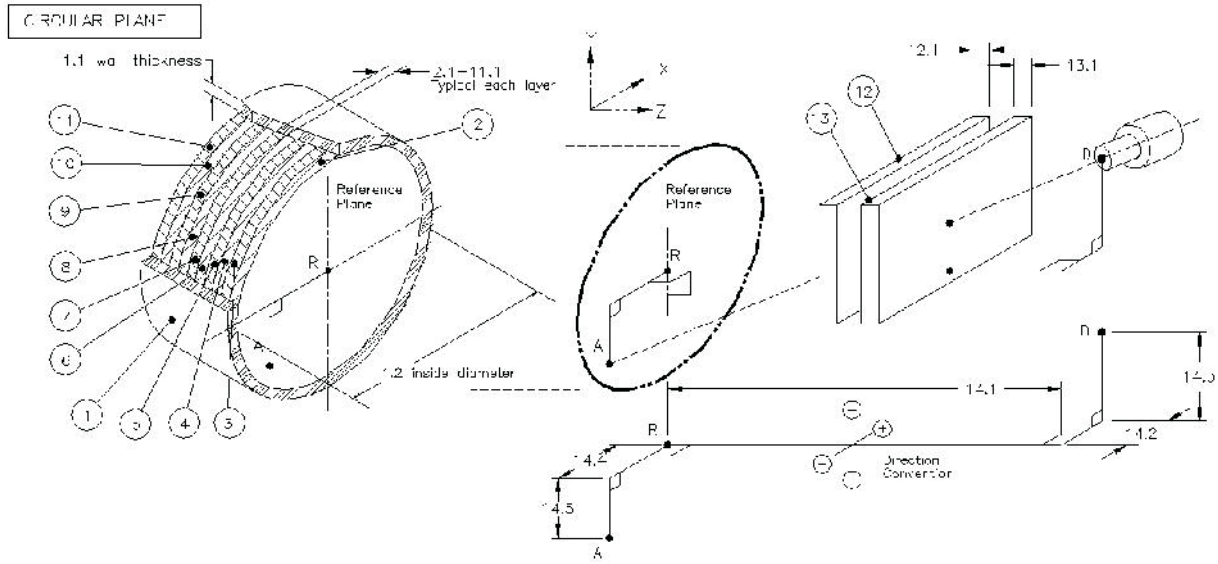

Geometry Composer Report

Date: Friday, December 09, 2016 - 16:19:06
Description: 1 square meter hot spot at 122cm offset
Comment: for testing non-uniform contamination
File Name: C:\GENIE2K\isocs\data\GEOMETRY\In-Situ\CIRCULAR_PLANE\1 sq meter - 122cm offset.geo
Software: ISOCS
Template: CIRCULAR_PLANE, Version: (default)

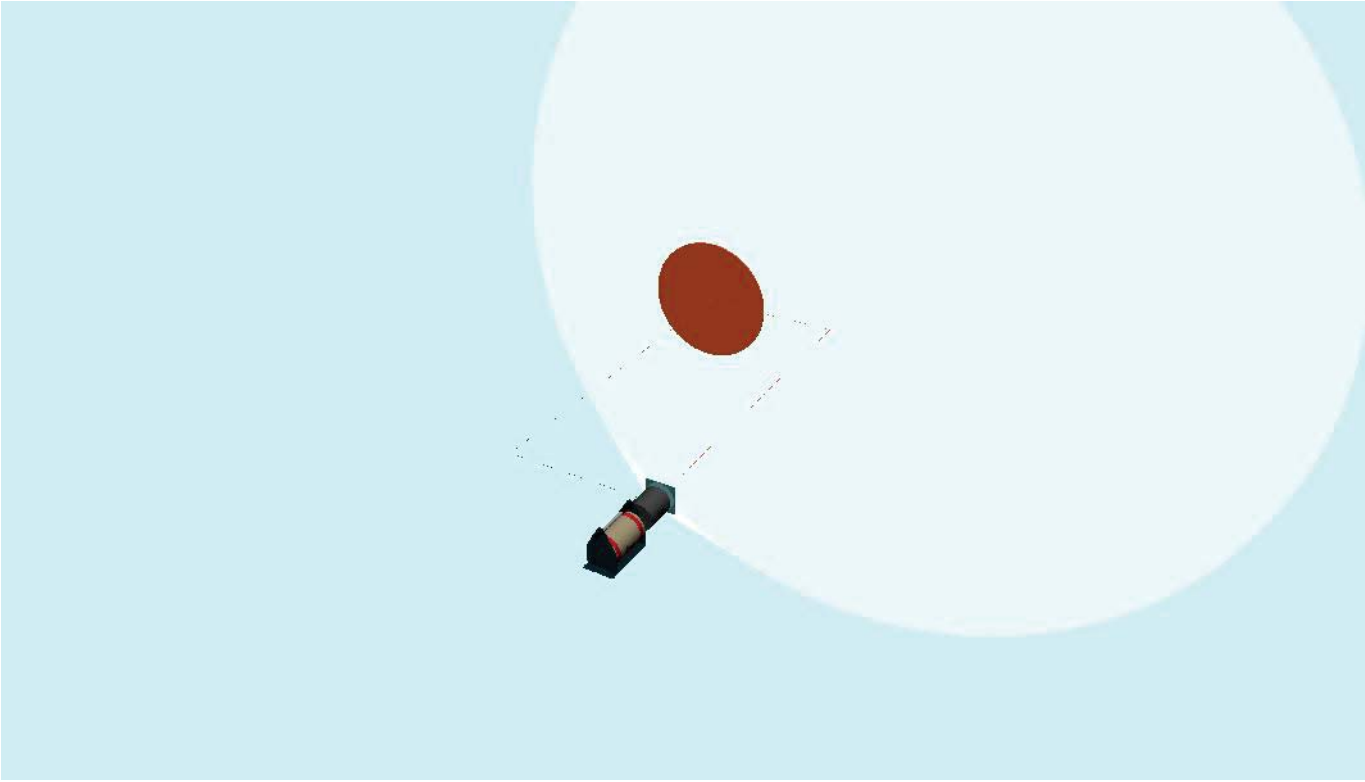

Geometry Composer Report

Date: Saturday, December 10, 2016 - 08:02:11
Description: 1 square meter hot spot at 187cm offset
Comment: for testing non-uniform contamination
File Name: C:\GENIE2K\isocs\data\GEOMETRY\In-Situ\CIRCULAR_PLANE\1 sq meter - 187cm offset.geo
Software: ISOCS
Template: CIRCULAR_PLANE, Version: (default)
Detector: 3844f
Collimator: 50mm-90d new (newISOCS 50mm side 90deg collimation [large hole collimator])
Environment: Temperature = 22 °C, Pressure = 760 mm Hg, Relative Humidity = 30%
Integration: Convergence = 1.00%, MDRPN = 2^4 (16), CRPN = 2^4 (16)

Dimensions (cm)

No.	Description	d.1	d.2	d.3	d.4	d.5	d.6	Material	Density	Rel. Conc.
1	Side Walls	0	113					none		
2	Layer 1	1.27						concrete	2.3	1.00
3	Layer 2	0						<none>		
4	Layer 3	0						<none>		
5	Layer 4	0						<none>		
6	Layer 5	0						<none>		
7	Layer 6	0						<none>		
8	Layer 7	0						<none>		
9	Layer 8	0						<none>		
10	Layer 9	0						<none>		
11	Layer 10	0						<none>		
12	Absorber1	0.3						hpolyeth	0.95	
13	Absorber2									
14	Source-Detector	300	187	0	187	0				

List of energies for efficiency curve generation

59.5 88.0 122.1 165.9 391.7 661.7 898.0 1173.2
1332.5 1836.0

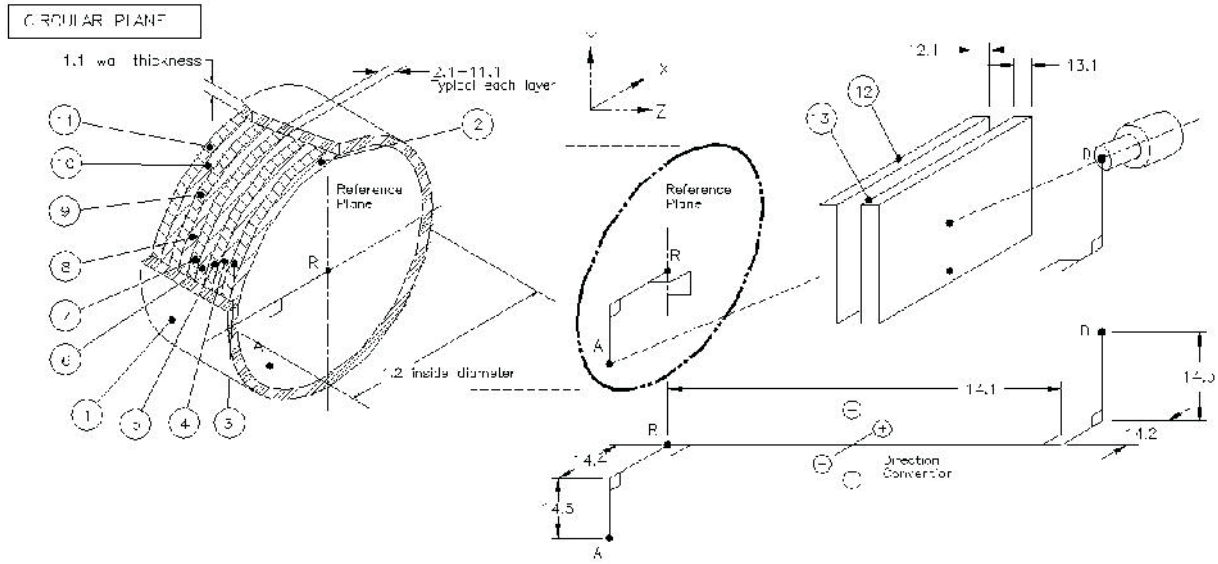

Geometry Composer Report

Date: Saturday, December 10, 2016 - 08:02:11
Description: 1 square meter hot spot at 187cm offset
Comment: for testing non-uniform contamination
File Name: C:\GENIE2K\isocs\data\GEOMETRY\In-Situ\CIRCULAR_PLANE\1 sq meter - 187cm offset.geo
Software: ISOCS
Template: CIRCULAR_PLANE, Version: (default)

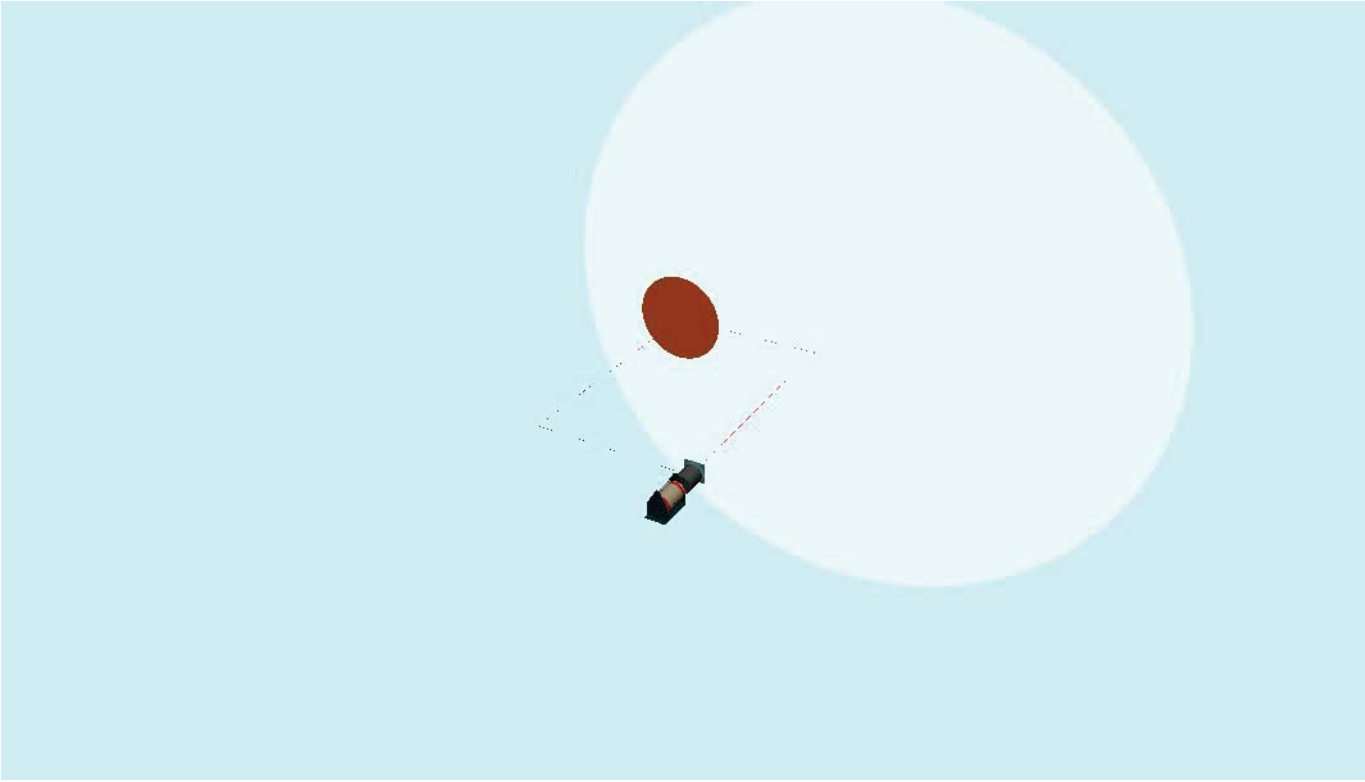

Geometry Composer Report

Date: Friday, December 09, 2016 - 16:20:18
Description: 1 square meter hot spot at 244cm offset
Comment: for testing non-uniform contamination
File Name: C:\GENIE2K\isocs\data\GEOMETRY\In-Situ\CIRCULAR_PLANE\1 sq meter - 244cm offset.geo
Software: ISOCS
Template: CIRCULAR_PLANE, Version: (default)
Detector: 3844f
Collimator: 50mm-90d new (newISOCS 50mm side 90deg collimation [large hole collimator])
Environment: Temperature = 22 °C, Pressure = 760 mm Hg, Relative Humidity = 30%
Integration: Convergence = 1.00%, MDRPN = 2^4 (16), CRPN = 2^4 (16)

Dimensions (cm)

No.	Description	d.1	d.2	d.3	d.4	d.5	d.6	Material	Density	Rel. Conc.
1	Side Walls	0	113					none		
2	Layer 1	1.27						concrete	2.3	1.00
3	Layer 2	0						<none>		
4	Layer 3	0						<none>		
5	Layer 4	0						<none>		
6	Layer 5	0						<none>		
7	Layer 6	0						<none>		
8	Layer 7	0						<none>		
9	Layer 8	0						<none>		
10	Layer 9	0						<none>		
11	Layer 10	0						<none>		
12	Absorber1	0.3						hpolyeth	0.95	
13	Absorber2									
14	Source-Detector	300	244	0	244	0				

List of energies for efficiency curve generation

59.5 88.0 122.1 165.9 391.7 661.7 898.0 1173.2
1332.5 1836.0

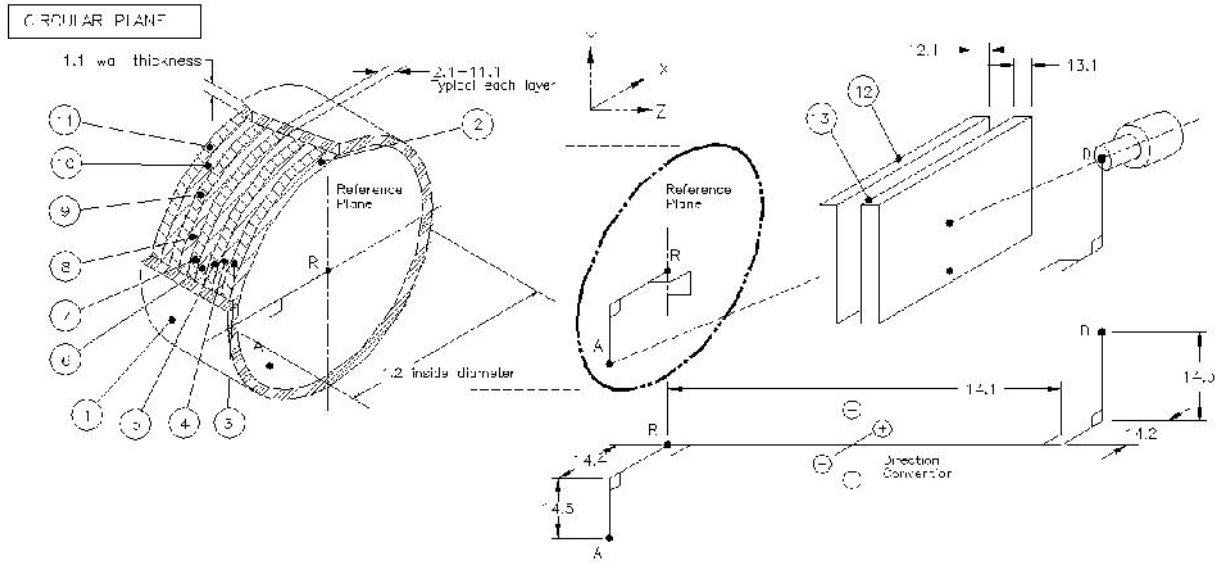

Geometry Composer Report

Date: Friday, December 09, 2016 - 16:20:18
Description: 1 square meter hot spot at 244cm offset
Comment: for testing non-uniform contamination
File Name: C:\GENIE2K\isocs\data\GEOMETRY\In-Situ\CIRCULAR_PLANE\1 sq meter - 244cm offset.geo
Software: ISOCS
Template: CIRCULAR_PLANE, Version: (default)

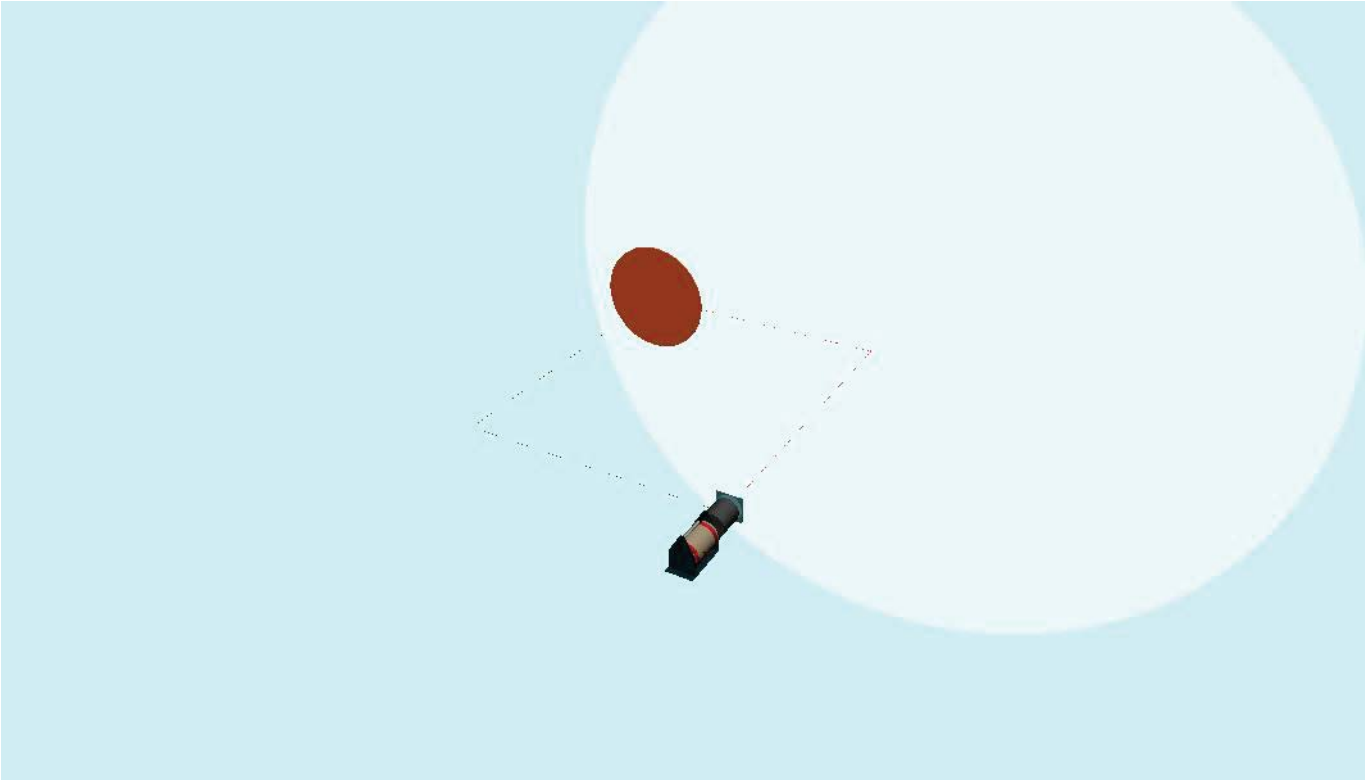

Geometry Composer Report

Date: Saturday, December 10, 2016 - 08:30:46
Description: 0.5 square meter hot spot at 0cm offset
Comment: for testing non-uniform contamination
File Name: C:\GENIE2K\isocs\data\GEOMETRY\In-Situ\CIRCULAR_PLANE\0.5 sq meter - 0cm offset.geo
Software: ISOCS
Template: CIRCULAR_PLANE, Version: (default)
Detector: 3844f
Collimator: 50mm-90d new (newISOCS 50mm side 90deg collimation [large hole collimator])
Environment: Temperature = 22 °C, Pressure = 760 mm Hg, Relative Humidity = 30%
Integration: Convergence = 1.00%, MDRPN = 2^4 (16), CRPN = 2^4 (16)

Dimensions (cm)

No.	Description	d.1	d.2	d.3	d.4	d.5	d.6	Material	Density	Rel. Conc.
1	Side Walls	0	80					none		
2	Layer 1	1.27						concrete	2.3	1.00
3	Layer 2	0						<none>		
4	Layer 3	0						<none>		
5	Layer 4	0						<none>		
6	Layer 5	0						<none>		
7	Layer 6	0						<none>		
8	Layer 7	0						<none>		
9	Layer 8	0						<none>		
10	Layer 9	0						<none>		
11	Layer 10	0						<none>		
12	Absorber1	0.3						hpolyeth	0.95	
13	Absorber2									
14	Source-Detector	300	0	0	0	0				

List of energies for efficiency curve generation

59.5 88.0 122.1 165.9 391.7 661.7 898.0 1173.2
1332.5 1836.0

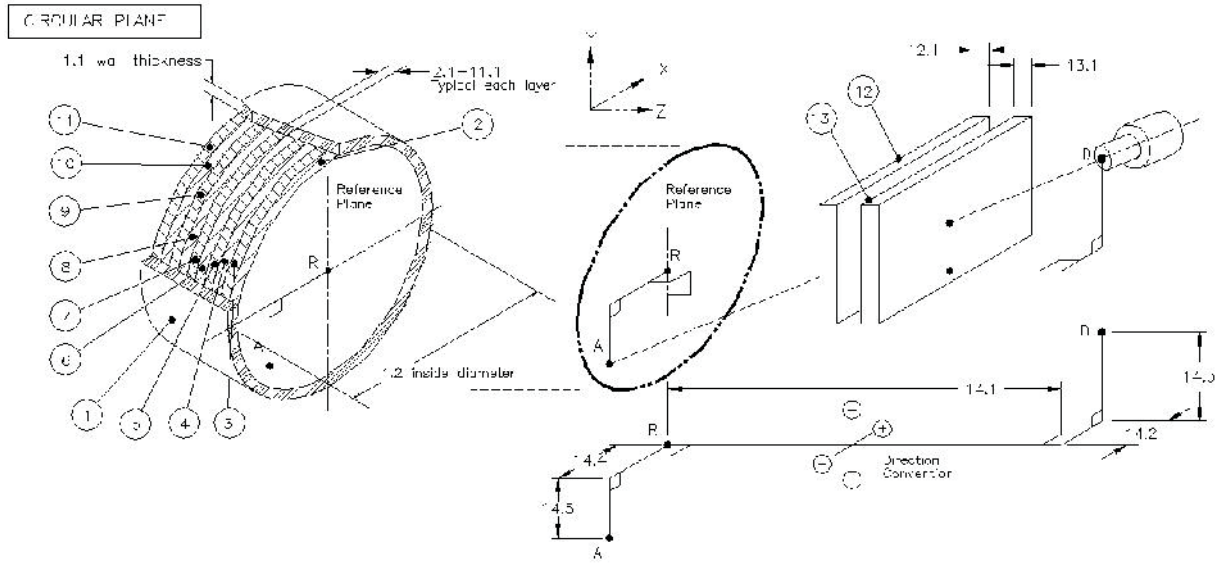

Geometry Composer Report

Date: Saturday, December 10, 2016 - 08:30:46
Description: 0.5 square meter hot spot at 0cm offset
Comment: for testing non-uniform contamination
File Name: C:\GENIE2K\isocs\data\GEOMETRY\In-Situ\CIRCULAR_PLANE\0.5 sq meter - 0cm offset.geo
Software: ISOCS
Template: CIRCULAR_PLANE, Version: (default)

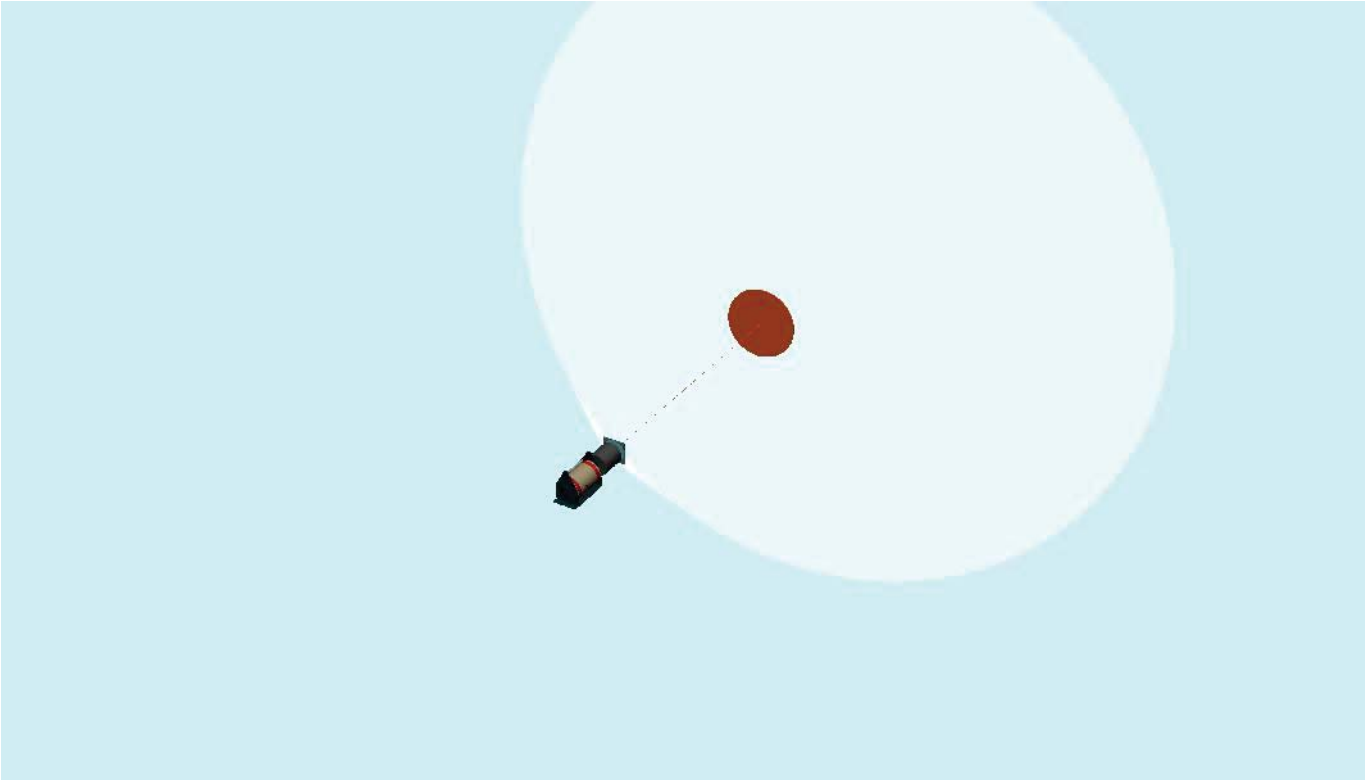

Geometry Composer Report

Date: Saturday, December 10, 2016 - 08:29:37
Description: 0.5 square meter hot spot at 130cm offset
Comment: for testing non-uniform contamination
File Name: C:\GENIE2K\isocs\data\GEOMETRY\In-Situ\CIRCULAR_PLANE\0.5 sq meter - 130cm offset.geo
Software: ISOCS
Template: CIRCULAR_PLANE, Version: (default)
Detector: 3844f
Collimator: 50mm-90d new (newISOCS 50mm side 90deg collimation [large hole collimator])
Environment: Temperature = 22 °C, Pressure = 760 mm Hg, Relative Humidity = 30%
Integration: Convergence = 1.00%, MDRPN = 2^4 (16), CRPN = 2^4 (16)

Dimensions (cm)

No.	Description	d.1	d.2	d.3	d.4	d.5	d.6	Material	Density	Rel. Conc.
1	Side Walls	0	80					none		
2	Layer 1	1.27						concrete	2.3	1.00
3	Layer 2	0						<none>		
4	Layer 3	0						<none>		
5	Layer 4	0						<none>		
6	Layer 5	0						<none>		
7	Layer 6	0						<none>		
8	Layer 7	0						<none>		
9	Layer 8	0						<none>		
10	Layer 9	0						<none>		
11	Layer 10	0						<none>		
12	Absorber1	0.3						hpolyeth	0.95	
13	Absorber2									
14	Source-Detector	300	130	0	130	0				

List of energies for efficiency curve generation

59.5 88.0 122.1 165.9 391.7 661.7 898.0 1173.2
1332.5 1836.0

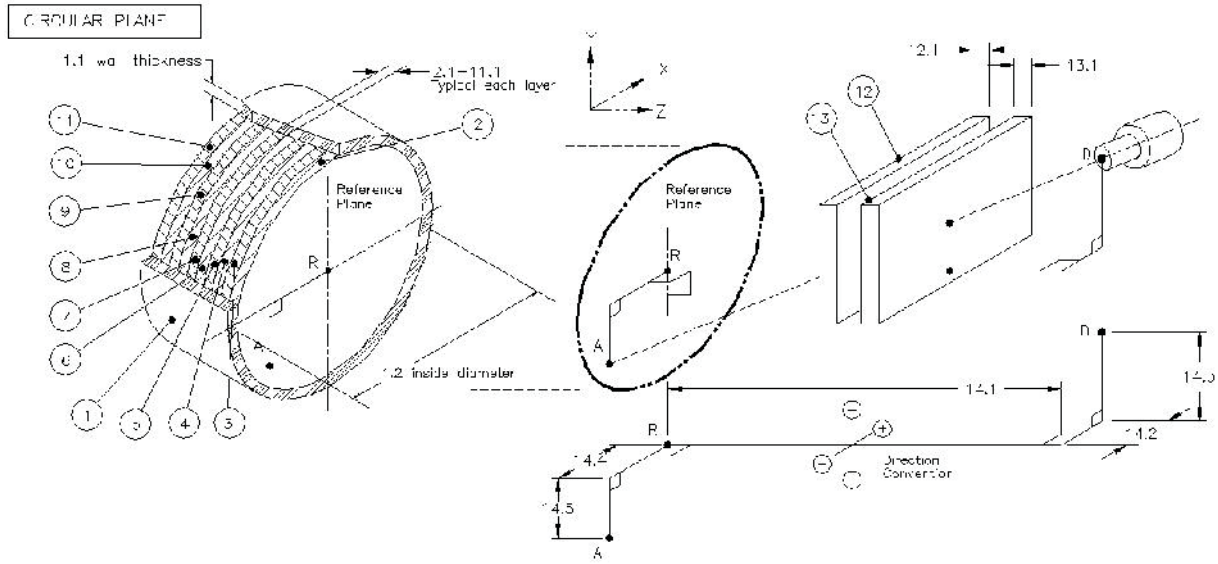

Geometry Composer Report

Date: Saturday, December 10, 2016 - 08:29:37
Description: 0.5 square meter hot spot at 130cm offset
Comment: for testing non-uniform contamination
File Name: C:\GENIE2K\isocs\data\GEOMETRY\In-Situ\CIRCULAR_PLANE\0.5 sq meter - 130cm offset.geo
Software: ISOCS
Template: CIRCULAR_PLANE, Version: (default)

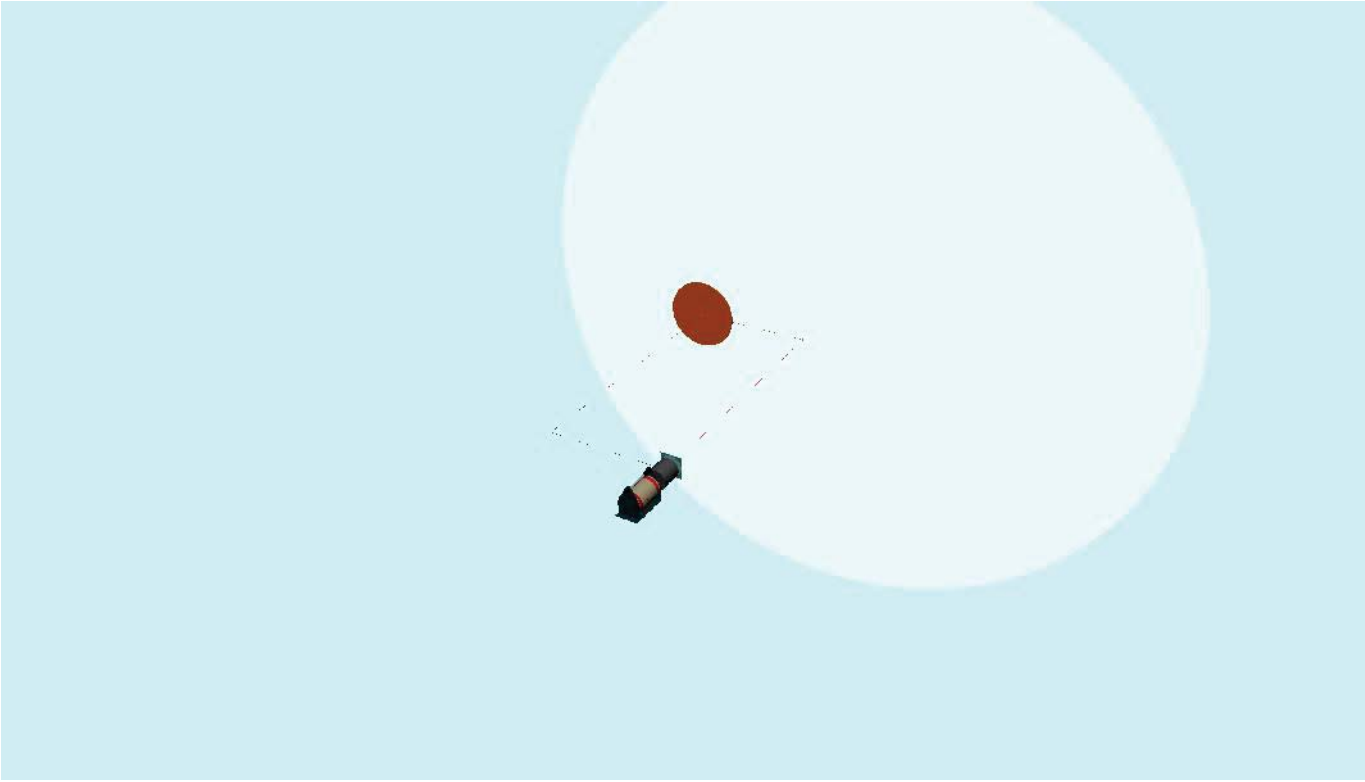

Geometry Composer Report

Date: Monday, December 12, 2016 - 16:30:46
Description: 0.5 square meter hot spot at 187cm offset
Comment: for testing non-uniform contamination
File Name: C:\GENIE2K\isocs\data\GEOMETRY\In-Situ\CIRCULAR_PLANE\0.5 sq meter - 187cm offset.geo
Software: ISOCS
Template: CIRCULAR_PLANE, Version: (default)
Detector: 3844f
Collimator: 50mm-90d new (newISOCS 50mm side 90deg collimation [large hole collimator])
Environment: Temperature = 22 °C, Pressure = 760 mm Hg, Relative Humidity = 30%
Integration: Convergence = 1.00%, MDRPN = 2^4 (16), CRPN = 2^4 (16)

Dimensions (cm)

No.	Description	d.1	d.2	d.3	d.4	d.5	d.6	Material	Density	Rel. Conc.
1	Side Walls	0	80					none		
2	Layer 1	1.27						concrete	2.3	1.00
3	Layer 2	0						<none>		
4	Layer 3	0						<none>		
5	Layer 4	0						<none>		
6	Layer 5	0						<none>		
7	Layer 6	0						<none>		
8	Layer 7	0						<none>		
9	Layer 8	0						<none>		
10	Layer 9	0						<none>		
11	Layer 10	0						<none>		
12	Absorber1	0.3						hpolyeth	0.95	
13	Absorber2									
14	Source-Detector	300	187	0	187	0				

List of energies for efficiency curve generation

59.5 88.0 122.1 165.9 391.7 661.7 898.0 1173.2
1332.5 1836.0

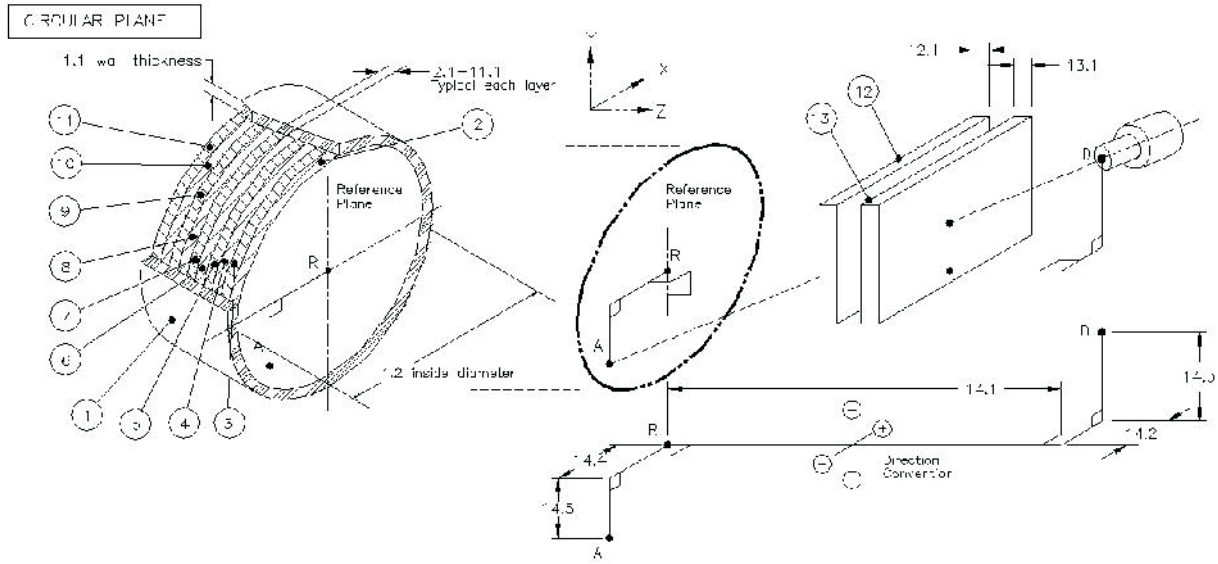

Geometry Composer Report

Date: Monday, December 12, 2016 - 16:30:46
Description: 0.5 square meter hot spot at 187cm offset
Comment: for testing non-uniform contamination
File Name: C:\GENIE2K\isocs\data\GEOMETRY\In-Situ\CIRCULAR_PLANE\0.5 sq meter - 187cm offset.geo
Software: ISOCS
Template: CIRCULAR_PLANE, Version: (default)

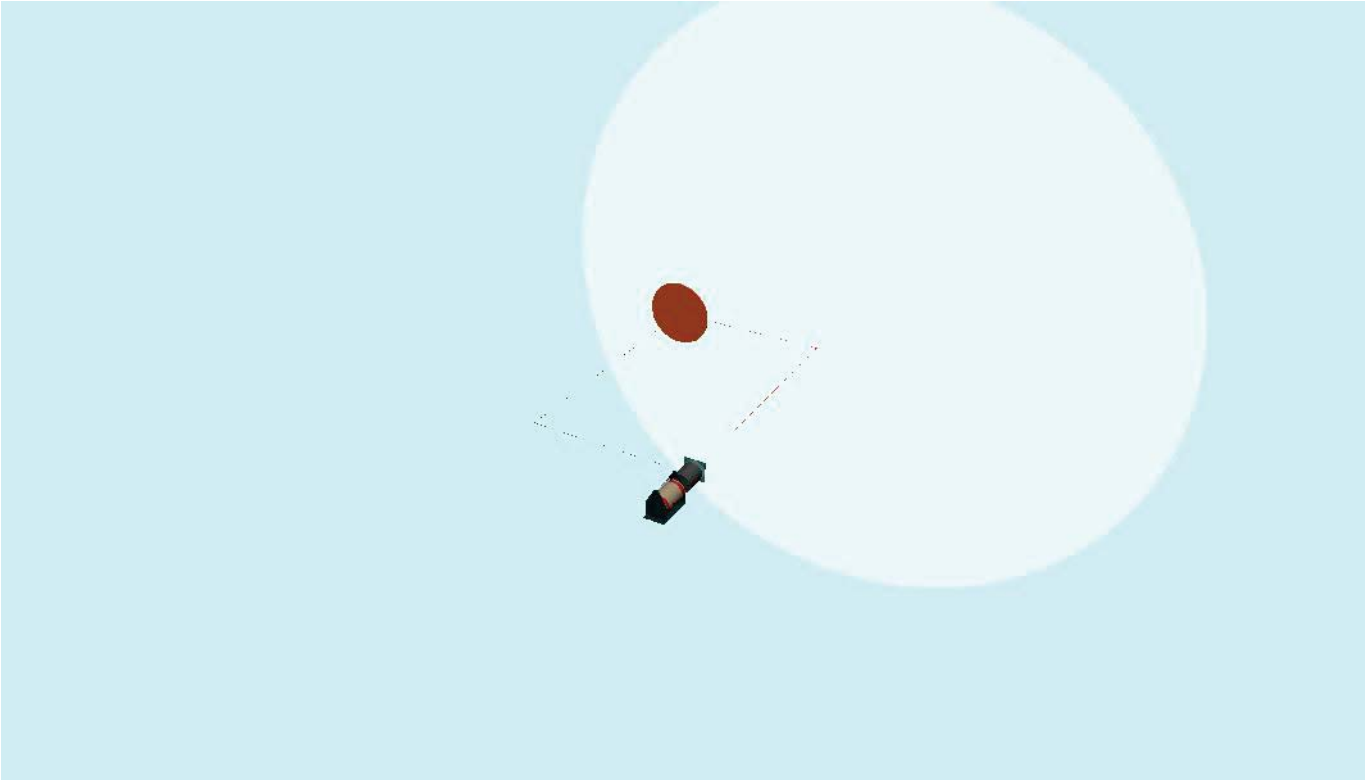

Geometry Composer Report

Date: Saturday, December 10, 2016 - 08:28:06
Description: 0.5 square meter hot spot at 260cm offset
Comment: for testing non-uniform contamination
File Name: C:\GENIE2K\isocs\data\GEOMETRY\In-Situ\CIRCULAR_PLANE\0.5 sq meter - 260cm offset.geo
Software: ISOCS
Template: CIRCULAR_PLANE, Version: (default)
Detector: 3844f
Collimator: 50mm-90d new (newISOCS 50mm side 90deg collimation [large hole collimator])
Environment: Temperature = 22 °C, Pressure = 760 mm Hg, Relative Humidity = 30%
Integration: Convergence = 1.00%, MDRPN = 2^4 (16), CRPN = 2^4 (16)

Dimensions (cm)

No.	Description	d.1	d.2	d.3	d.4	d.5	d.6	Material	Density	Rel. Conc.
1	Side Walls	0	80					none		
2	Layer 1	1.27						concrete	2.3	1.00
3	Layer 2	0						<none>		
4	Layer 3	0						<none>		
5	Layer 4	0						<none>		
6	Layer 5	0						<none>		
7	Layer 6	0						<none>		
8	Layer 7	0						<none>		
9	Layer 8	0						<none>		
10	Layer 9	0						<none>		
11	Layer 10	0						<none>		
12	Absorber1	0.3						hpolyeth	0.95	
13	Absorber2									
14	Source-Detector	300	260	0	260	0				

List of energies for efficiency curve generation

59.5 88.0 122.1 165.9 391.7 661.7 898.0 1173.2
1332.5 1836.0

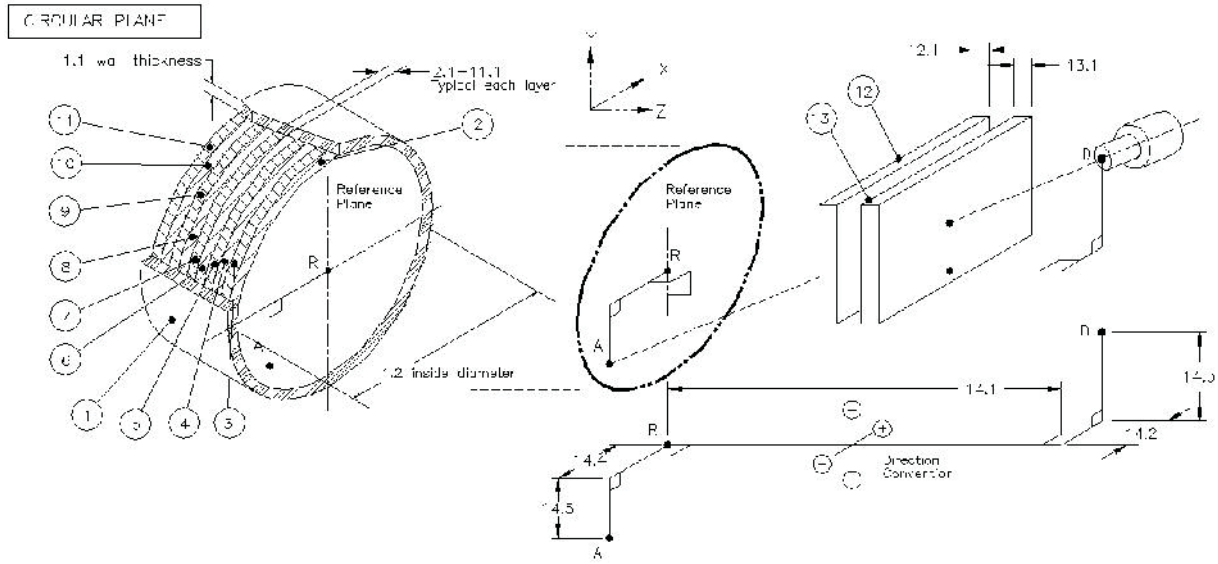

Geometry Composer Report

Date: Saturday, December 10, 2016 - 08:28:06
Description: 0.5 square meter hot spot at 260cm offset
Comment: for testing non-uniform contamination
File Name: C:\GENIE2K\isocs\data\GEOMETRY\In-Situ\CIRCULAR_PLANE\0.5 sq meter - 260cm offset.geo
Software: ISOCS
Template: CIRCULAR_PLANE, Version: (default)

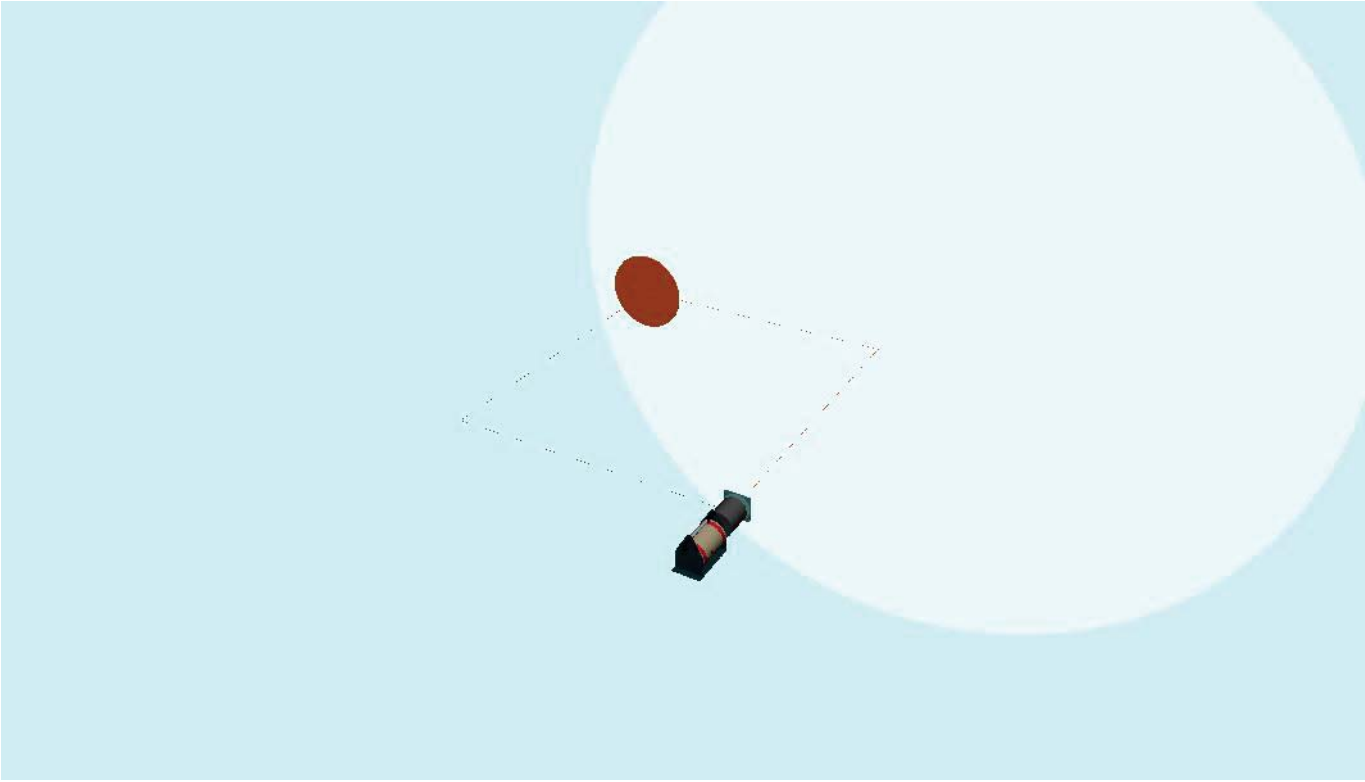

ISOCS/LABSOCS RESULTS

ISOCS/LabSOCS File: C:\GENIE2K\isocs\data\GEOMETRY\In-Situ\CIRCULAR_PLANE\LaCrosse
ISOCS/LabSOCS Time: 12/08/16 15:40:19
Template: CIRCULAR_PLANE
Geom Description: testing
Comment: uniform contamination
Detector: 3844F
Collimator: 50MM-90D_NEW
Convergence: 1.00 %
Area [Sq Meters]: 2.8274e+001 (C)
Mass [Grams]: 8.4385e+005 (C)
Length [Meters]: not used
(C) = Value calculated by ISOCS
(U) = Value modified by user

Energy	Efficiency	%Uncertainty	%Convergence	Final # of Voxels
59.54	1.16155e-006	10.0	-0.179794	8204
88.03	3.45197e-006	10.0	-0.152350	8204
122.06	4.41137e-006	10.0	-0.129345	8204
200.00	4.26375e-006	8.0	-0.127669	8204
400.00	2.96546e-006	8.0	-0.134345	8204
661.65	2.23700e-006	6.0	-0.135345	8204
900.00	1.88369e-006	6.0	-0.136932	8204
1000.00	1.77988e-006	4.0	-0.137266	8204
1173.22	1.63831e-006	4.0	-0.138489	8204
1332.49	1.53505e-006	4.0	-0.138455	8204
1836.01	1.22409e-006	4.0	-0.137729	8204

ISOCS/LABSOCS RESULTS

ISOCS/LabSOCS File: C:\GENIE2K\isocs\data\GEOMETRY\In-Situ\CIRCULAR_PLANE\1 sq met
ISOCS/LabSOCS Time: 12/09/16 16:17:39
Template: CIRCULAR_PLANE
Geom Description: testing
Comment: 1 sq meter spot at 0cm offset
Detector: 3844F
Collimator: 50MM-90D_NEW
Convergence: 1.00 %
Area [Sq Meters]: 1.0029e+000 (C)
Mass [Grams]: 2.9931e+004 (C)
Length [Meters]: not used
(C) = Value calculated by ISOCS
(U) = Value modified by user

Energy	Efficiency	%Uncertainty	%Convergence	Final # of Voxels
59.54	2.68238e-006	10.0	-0.140040	1618
88.03	7.31641e-006	10.0	-0.777371	406
122.06	9.29543e-006	10.0	-0.780771	406
165.85	9.80488e-006	8.0	-0.728362	406
391.69	7.32508e-006	8.0	-0.403290	406
661.65	5.43309e-006	6.0	-0.244576	406
898.02	4.54296e-006	6.0	-0.193123	406
1173.22	3.87143e-006	4.0	-0.160452	406
1332.49	3.58549e-006	4.0	-0.148406	406
1836.01	2.79764e-006	4.0	-0.127967	406

ISOCS/LABSOCS RESULTS

ISOCS/LabSOCS File: C:\GENIE2K\isocs\data\GEOMETRY\In-Situ\CIRCULAR_PLANE\1 sq met
ISOCS/LabSOCS Time: 12/09/16 16:19:00
Template: CIRCULAR_PLANE
Geom Description: testing
Comment: 1 sq meter spot at 122cm offset
Detector: 3844F
Collimator: 50MM-90D_NEW
Convergence: 1.00 %
Area [Sq Meters]: 1.0029e+000 (C)
Mass [Grams]: 2.9931e+004 (C)
Length [Meters]: not used
(C) = Value calculated by ISOCS
(U) = Value modified by user

Energy	Efficiency	%Uncertainty	%Convergence	Final # of Voxels
59.54	1.90547e-006	10.0	0.278311	814
88.03	5.29824e-006	10.0	0.260644	814
122.06	6.66782e-006	10.0	0.198634	814
165.85	6.82238e-006	8.0	0.164356	814
391.69	4.71350e-006	8.0	-0.007456	406
661.65	3.56662e-006	6.0	-0.015106	406
898.02	3.04443e-006	6.0	-0.011927	406
1173.22	2.64331e-006	4.0	-0.010708	406
1332.49	2.48113e-006	4.0	-0.011913	406
1836.01	1.96002e-006	4.0	-0.013279	406

ISOCS/LABSOCS RESULTS

ISOCS/LabSOCS File: C:\GENIE2K\isocs\data\GEOMETRY\In-Situ\CIRCULAR_PLANE\1 sq met
ISOCS/LabSOCS Time: 12/10/16 08:02:02
Template: CIRCULAR_PLANE
Geom Description: testing
Comment: 1 sq meter spot at 187cm offset
Detector: 3844F
Collimator: 50MM-90D_NEW
Convergence: 1.00 %
Area [Sq Meters]: 1.0029e+000 (C)
Mass [Grams]: 2.9931e+004 (C)
Length [Meters]: not used
(C) = Value calculated by ISOCS
(U) = Value modified by user

Energy	Efficiency	%Uncertainty	%Convergence	Final # of Voxels
59.54	1.19357e-006	10.0	0.546088	814
88.03	3.53245e-006	10.0	-0.265557	406
122.06	4.49021e-006	10.0	-0.170552	406
165.85	4.53135e-006	8.0	-0.172616	406
391.69	2.98138e-006	8.0	0.054331	406
661.65	2.23427e-006	6.0	0.120715	406
898.02	1.90023e-006	6.0	0.103467	406
1173.22	1.65711e-006	4.0	0.082817	406
1332.49	1.56019e-006	4.0	0.074506	406
1836.01	1.25521e-006	4.0	0.060630	406

ISOCS/LABSOCS RESULTS

ISOCS/LabSOCS File: C:\GENIE2K\isocs\data\GEOMETRY\In-Situ\CIRCULAR_PLANE\1 sq met
ISOCS/LabSOCS Time: 12/09/16 16:20:14
Template: CIRCULAR_PLANE
Geom Description: testing
Comment: 1 sq meter spot at 244cm offset
Detector: 3844F
Collimator: 50MM-90D_NEW
Convergence: 1.00 %
Area [Sq Meters]: 1.0029e+000 (C)
Mass [Grams]: 2.9931e+004 (C)
Length [Meters]: not used
(C) = Value calculated by ISOCS
(U) = Value modified by user

Energy	Efficiency	%Uncertainty	%Convergence	Final # of Voxels
59.54	7.13255e-007	10.0	0.036325	814
88.03	2.33076e-006	10.0	-0.143187	406
122.06	3.02613e-006	10.0	-0.193447	406
165.85	3.02820e-006	8.0	-0.268418	406
391.69	1.90055e-006	8.0	-0.378680	406
661.65	1.39423e-006	6.0	-0.379455	406
898.02	1.16689e-006	6.0	-0.374512	406
1173.22	1.01220e-006	4.0	-0.365186	406
1332.49	9.48590e-007	4.0	-0.360036	406
1836.01	7.68295e-007	4.0	-0.348625	406

ISOCS/LABSOCS RESULTS

ISOCS/LabSOCS File: C:\GENIE2K\isocs\data\GEOMETRY\In-Situ\CIRCULAR_PLANE\0.5 sq m
ISOCS/LabSOCS Time: 12/10/16 08:30:42
Template: CIRCULAR_PLANE
Geom Description: testing
Comment: 0.5 sq meter spot at 0cm offset
Detector: 3844F
Collimator: 50MM-90D_NEW
Convergence: 1.00 %
Area [Sq Meters]: 5.0265e-001 (C)
Mass [Grams]: 1.5002e+004 (C)
Length [Meters]: not used
(C) = Value calculated by ISOCS
(U) = Value modified by user

Energy	Efficiency	%Uncertainty	%Convergence	Final # of Voxels
59.54	2.72256e-006	10.0	-0.749959	406
88.03	7.35037e-006	10.0	-0.494502	406
122.06	9.33626e-006	10.0	-0.631637	406
165.85	9.90102e-006	8.0	-0.469870	406
391.69	7.53926e-006	8.0	-0.222821	406
661.65	5.57552e-006	6.0	-0.139931	406
898.02	4.64819e-006	6.0	-0.112527	406
1173.22	3.95082e-006	4.0	-0.093635	406
1332.49	3.65691e-006	4.0	-0.086653	406
1836.01	2.85581e-006	4.0	-0.077153	406

ISOCS/LABSOCS RESULTS

ISOCS/LabSOCS File: C:\GENIE2K\isocs\data\GEOMETRY\In-Situ\CIRCULAR_PLANE\0.5 sq m
ISOCS/LabSOCS Time: 12/10/16 08:29:32
Template: CIRCULAR_PLANE
Geom Description: testing
Comment: 0.5 sq meter spot at 130cm offset
Detector: 3844F
Collimator: 50MM-90D_NEW
Convergence: 1.00 %
Area [Sq Meters]: 5.0265e-001 (C)
Mass [Grams]: 1.5002e+004 (C)
Length [Meters]: not used
(C) = Value calculated by ISOCS
(U) = Value modified by user

Energy	Efficiency	%Uncertainty	%Convergence	Final # of Voxels
59.54	1.83855e-006	10.0	0.158528	814
88.03	5.11330e-006	10.0	0.165720	406
122.06	6.42922e-006	10.0	0.194741	406
165.85	6.56379e-006	8.0	0.115531	406
391.69	4.51382e-006	8.0	-0.077504	406
661.65	3.41510e-006	6.0	-0.067817	406
898.02	2.91937e-006	6.0	-0.046563	406
1173.22	2.53915e-006	4.0	-0.031967	406
1332.49	2.38712e-006	4.0	-0.027023	406
1836.01	1.89044e-006	4.0	-0.019510	406

ISOCS/LABSOCS RESULTS

ISOCS/LabSOCS File: C:\GENIE2K\isocs\data\GEOMETRY\In-Situ\CIRCULAR_PLANE\0.5 sq m
ISOCS/LabSOCS Time: 12/10/16 08:44:18
Template: CIRCULAR_PLANE
Geom Description: testing
Comment: 0.5 sq meter spot at 187cm offset
Detector: 3844F
Collimator: 50MM-90D_NEW
Convergence: 1.00 %
Area [Sq Meters]: 5.0265e-001 (C)
Mass [Grams]: 1.5002e+004 (C)
Length [Meters]: not used
(C) = Value calculated by ISOCS
(U) = Value modified by user

Energy	Efficiency	%Uncertainty	%Convergence	Final # of Voxels
59.54	1.18927e-006	10.0	0.019065	814
88.03	3.54280e-006	10.0	-0.512675	406
122.06	4.50671e-006	10.0	-0.465903	406
165.85	4.54781e-006	8.0	-0.451511	406
391.69	2.98471e-006	8.0	-0.182990	406
661.65	2.23393e-006	6.0	-0.155737	406
898.02	1.90001e-006	6.0	-0.144183	406
1173.22	1.65746e-006	4.0	-0.131846	406
1332.49	1.56119e-006	4.0	-0.126603	406
1836.01	1.25751e-006	4.0	-0.115360	406

ISOCS/LABSOCS RESULTS

ISOCS/LabSOCS File: C:\GENIE2K\isocs\data\GEOMETRY\In-Situ\CIRCULAR_PLANE\0.5 sq m
ISOCS/LabSOCS Time: 12/10/16 08:27:58
Template: CIRCULAR_PLANE
Geom Description: testing
Comment: 0.5 sq meter spot at 260cm offset
Detector: 3844F
Collimator: 50MM-90D_NEW
Convergence: 1.00 %
Area [Sq Meters]: 5.0265e-001 (C)
Mass [Grams]: 1.5002e+004 (C)
Length [Meters]: not used
(C) = Value calculated by ISOCS
(U) = Value modified by user

Energy	Efficiency	%Uncertainty	%Convergence	Final # of Voxels
59.54	6.07521e-007	10.0	-0.249493	814
88.03	2.05675e-006	10.0	-0.112557	814
122.06	2.69196e-006	10.0	-0.096183	814
165.85	2.68818e-006	8.0	-0.021805	814
391.69	1.65513e-006	8.0	0.237152	814
661.65	1.19747e-006	6.0	0.377868	406
898.02	9.94766e-007	6.0	0.393056	406
1173.22	8.59948e-007	4.0	0.392366	406
1332.49	8.04063e-007	4.0	0.389338	406
1836.01	6.51369e-007	4.0	0.378008	406

Attachment 3 Minimum Detectable Concentrations

```
*************************************************************************
*****        G A M M A   S P E C T R U M   A N A L Y S I S        *****
*************************************************************************
```

Filename: C:\Pete's Current Stuff\LaCrosse\ISOCS stuff\G1 North Wall 90

Report Generated On	: 12/8/2016 4:08:36 PM
Sample Title	: G1 North wall 12/07/16
Sample Description	: 3 meter 90 degree collimation
Sample Identification	:
Sample Type	: Clean concrete
Sample Geometry	:
Peak Locate Threshold	: 3.00
Peak Locate Range (in channels)	: 1 - 65535
Peak Area Range (in channels)	: 1 - 8192
Identification Energy Tolerance	: 1.500 keV
Sample Size	: 1.000E+000 sq meter
Sample Taken On	: 11/3/2016 3:49:00 PM
Acquisition Started	: 12/7/2016 1:11:01 PM
Live Time	: 600.0 seconds
Real Time	: 600.2 seconds
Dead Time	: 0.03 %

Energy Calibration Used Done On	: 10/12/2016
Efficiency Calibration Used Done On	: 12/8/2016
Efficiency ID	: LACBWR STS

****
***** P E A K A N A L Y S I S R E P O R T *****
****

Detector Name: 3844
Sample Title: G1 North wall 12/07/16
Peak Analysis Performed on: 12/8/2016 4:08:36 PM
Peak Analysis From Channel: 1
Peak Analysis To Channel: 8192

Peak No.	ROI start	ROI end	Peak centroid	Energy (keV)	FWHM (keV)	Net Peak Area	Net Area Uncert.	Continuum Counts
1	1618-	1627	1622.50	405.73	0.74	1.09E+001	5.32	7.06E+000
2	5830-	5859	5844.49	1460.85	1.80	1.78E+002	14.04	3.88E+000

M = First peak in a multiplet region
m = Other peak in a multiplet region
F = Fitted singlet

Errors quoted at 1.000 sigma

```
*************************************************************************
*****   N U C L I D E   I D E N T I F I C A T I O N   R E P O R T   *****
*************************************************************************

     Sample Title:          G1 North wall  12/07/16
     Nuclide Library Used: C:\GENIE2K\CAMFILES\ESClearance-refined.

   ....................    IDENTIFIED NUCLIDES     ....................

   Nuclide    Id       Energy    Yield     Activity     Activity
   Name    Confidence  (keV)      (%)     (pCi/sq m)   Uncertainty

   K-40      1.000   1460.81*    10.67   1.84876E+006  1.64540E+005

       * = Energy line found in the spectrum.
       @ = Energy line not used for Weighted Mean Activity
       Energy Tolerance :    1.500 keV
       Nuclide confidence index threshold =   0.30
       Errors quoted at  1.000 sigma
```

```
*************************************************************************
*****   I N T E R F E R E N C E   C O R R E C T E D   R E P O R T   *****
*************************************************************************
```

Nuclide Name	Nuclide Id Confidence	Wt mean Activity (pCi/sq m)	Wt mean Activity Uncertainty
K-40	1.000	1.848757E+006	1.645401E+005

? = nuclide is part of an undetermined solution
X = nuclide rejected by the interference analysis
@ = nuclide contains energy lines not used in Weighted Mean Activity

Errors quoted at 1.000 sigma

********** U N I D E N T I F I E D P E A K S **********

Peak Locate Performed on: 12/8/2016 4:08:36 PM
Peak Locate From Channel: 1
Peak Locate To Channel: 8192

Peak No.	Energy (keV)	Peak Size in Counts per Second	Peak CPS % Uncertainty	Peak Type	Tol. Nuclide
1	405.73	1.8241E-002	48.60		

M = First peak in a multiplet region
m = Other peak in a multiplet region
F = Fitted singlet

Errors quoted at 1.000 sigma

****
***** N U C L I D E M D A R E P O R T *****
****

Detector Name: 3844
Sample Geometry:
Sample Title: G1 North wall 12/07/16
Nuclide Library Used: C:\GENIE2K\CAMFILES\ESClearance-refined.

	Nuclide Name	Energy (keV)	Yield (%)	Line MDA (pCi/sq m)	Nuclide MDA (pCi/sq m)	Activity (pCi/sq m)
	Th+dau	77.11	16.80	3.2335E+005	7.15E+004	-1.2918E+003
		87.30	6.05	6.6071E+005		-3.4324E+005
		238.63	41.40	7.1466E+004		1.3404E+005
		338.32	11.70	2.0806E+005		3.6803E+004
		583.19	29.70	9.9025E+004		1.4529E+004
		727.18	11.30	2.4931E+005		-2.0169E+003
		911.07	28.20	1.0549E+005		6.7926E+004
		966.60	27.10	1.1112E+005		6.6413E+004
>		2614.50	34.51	0.0000E+000		0.0000E+000
	CO-60	1173.22	100.00	2.5101E+004	2.36E+004	3.2710E+003
		1332.49	100.00	2.3581E+004		1.8911E+004
	CS-134	604.70	97.60	3.1911E+004	2.92E+004	3.1349E+003
		795.84	85.40	2.9210E+004		2.8080E+004
	CS-137	661.65	85.12	2.7551E+004	2.76E+004	-1.2662E+004
	EU-154	123.07	40.40	7.0693E+004	7.07E+004	-3.1907E+004
		1274.51	34.40	7.5767E+004		8.0472E+003
	AM-241	59.54	36.30	2.2485E+005	2.25E+005	2.4760E+004

+ = Nuclide identified during the nuclide identification
* = Energy line found in the spectrum
> = Calculated MDA is zero due to zero counts in the region, or the region is outside the spectrum, or has not been calculated
@ = Half-life too short to be able to perform the decay correction