PUBLIC VERSION

IFSAR Tier 1
Revision 0

Turkey Point Units 6 & 7

FPL

IFSAR Tier 1 Table of Contents

Section 1 — Introduction

- Section 1.1 — Definitions
- Section 1.2 — General Provisions
- Section 1.3 — Figure Legend
- Section 1.4 — List of Acronyms and Abbreviations

Section 2 — System Based Design Descriptions and ITAAC

- Section 2.1 — Reactor
- Section 2.2 — Nuclear Safety Systems
- Section 2.3 — Auxiliary Systems
- Section 2.4 — Steam and Power Conversion Systems
- Section 2.5 — Instrumentation and Control Systems
- Section 2.6 — Electrical Power Systems
- Section 2.7 — HVAC Systems

Section 3 — Non-System Based Design Descriptions and ITAAC

- Section 3.1 — Emergency Response Facilities
- Section 3.2 — Human Factors Engineering
- Section 3.3 — Buildings
- Section 3.4 — Initial Test Program
- Section 3.5 — Radiation Monitoring
- Section 3.6 — Reactor Coolant Pressure Boundary Leak Detection
- Section 3.7 — Design Reliability Assurance Program

Section 4 — Interface Requirements

Section 5 — Site Parameters

IFSAR Tier 1 Formatting Legend

Color	Description
	Original Westinghouse AP1000 DCD Revision 19 content (part of plant-specific DCD)
	Departures from AP1000 DCD Revision 19 content (part of plant-specific DCD)

IFSAR TIER 1 MASTER TABLE OF CONTENTS

Section			Page
1.0	INTRODUCTION		
	1.1	Definitions	1.1-1
	1.2	General Provisions	1.2-1
	1.3	Figure Legend	1.3-1
	1.4	List of Acronyms and Abbreviations	1.4-1
2.0	SYSTEM BASED DESIGN DESCRIPTIONS AND ITAAC		
	2.1	Reactor	2.1.1-1
	2.1.1	Fuel Handling and Refueling System	2.1.1-1
	2.1.2	Reactor Coolant System	2.1.2-1
	2.1.3	Reactor System	2.1.3-1
	2.2	Nuclear Safety Systems	2.2.1-1
	2.2.1	Containment System	2.2.1-1
	2.2.2	Passive Containment Cooling System	2.2.2-1
	2.2.3	Passive Core Cooling System	2.2.3-1
	2.2.4	Steam Generator System	2.2.4-1
	2.2.5	Main Control Room Emergency Habitability System	2.2.5-1
	2.3	Auxiliary Systems	2.3.1-1
	2.3.1	Component Cooling Water System	2.3.1-1
	2.3.2	Chemical and Volume Control System	2.3.2-1
	2.3.3	Standby Diesel Fuel Oil System	2.3.3-1
	2.3.4	Fire Protection System	2.3.4-1
	2.3.5	Mechanical Handling System	2.3.5-1
	2.3.6	Normal Residual Heat Removal System	2.3.6-1
	2.3.7	Spent Fuel Pool Cooling System	2.3.7-1
	2.3.8	Service Water System	2.3.8-1
	2.3.9	Containment Hydrogen Control System	2.3.9-1
	2.3.10	Liquid Radwaste System	2.3.10-1
	2.3.11	Gaseous Radwaste System	2.3.11-1
	2.3.12	Solid Radwaste System	2.3.12-1
	2.3.13	Primary Sampling System	2.3.13-1
	2.3.14	Demineralized Water Transfer and Storage System	2.3.14-1
	2.3.15	Compressed and Instrument Air System	2.3.15-1
	* 2.3.16	Potable Water System	2.3.16-1
	2.3.17	Waste Water System	2.3.17-1
	2.3.18	Plant Gas System	2.3.18-1
	2.3.19	Communication System	2.3.19-1
	2.3.20	Turbine Building Closed Cooling Water System	2.3.20-1
	2.3.21	Secondary Sampling System	2.3.21-1
	2.3.22	Containment Leak Rate Test System	2.3.22-1

IFSAR TIER 1 MASTER TABLE OF CONTENTS (Cont.)

Section			Page
	2.3.23	This section intentionally blank	2.3.23-1
	2.3.24	Demineralized Water Treatment System	2.3.24-1
	2.3.25	Gravity and Roof Drain Collection System	2.3.25-1
	2.3.26	This section intentionally blank	2.3.26-1
	2.3.27	Sanitary Drainage System	2.3.27-1
	2.3.28	Turbine Island Vents, Drains, and Relief System	2.3.28-1
	2.3.29	Radioactive Waste Drain System	2.3.29-1
2.4	Steam and Power Conversion Systems		2.4.1-1
	2.4.1	Main and Startup Feedwater System	2.4.1-1
	2.4.2	Main Turbine System	2.4.2-1
	2.4.3	Main Steam System	2.4.3-1
	2.4.4	Steam Generator Blowdown System	2.4.4-1
	2.4.5	Condenser Air Removal System	2.4.5-1
	2.4.6	Condensate System	2.4.6-1
	2.4.7	Circulating Water System	2.4.7-1
	2.4.8	Auxiliary Steam Supply System	2.4.8-1
	2.4.9	Condenser Tube Cleaning System	2.4.9-1
	2.4.10	Turbine Island Chemical Feed System	2.4.10-1
	2.4.11	Condensate Polishing System	2.4.11-1
	2.4.12	Gland Seal System	2.4.12-1
	2.4.13	Generator Hydrogen and CO_2 System	2.4.13-1
	2.4.14	Heater Drain System	2.4.14-1
	2.4.15	Hydrogen Seal Oil System	2.4.15-1
	2.4.16	Main Turbine and Generator Lube Oil System	2.4.16-1
2.5	Instrumentation and Control Systems		2.5.1-1
	2.5.1	Diverse Actuation System	2.5.1-1
	2.5.2	Protection and Safety Monitoring System	2.5.2-1
	2.5.3	Plant Control System	2.5.3-1
	2.5.4	Data Display and Processing System	2.5.4-1
	2.5.5	In-Core Instrumentation System	2.5.5-1
	2.5.6	Special Monitoring System	2.5.6-1
	2.5.7	Operation and Control Centers System	2.5.7-1
	2.5.8	Radiation Monitoring System	2.5.8-1
	2.5.9	Seismic Monitoring System	2.5.9-1
	2.5.10	Main Turbine Control and Diagnostic System	2.5.10-1

IFSAR TIER 1 MASTER TABLE OF CONTENTS (Cont.)

Section			Page
2.6	Electrical Power Systems		2.6.1-1
	2.6.1	Main ac Power System	2.6.1-1
	2.6.2	Non-Class 1E dc and Uninterruptible Power Supply System	2.6.2-1
	2.6.3	Class 1E dc and Uninterruptible Power Supply System	2.6.3-1
	2.6.4	Onsite Standby Power System	2.6.4-1
	2.6.5	Lighting System	2.6.5-1
	2.6.6	Grounding and Lightning Protection System	2.6.6-1
	2.6.7	Special Process Heat Tracing System	2.6.7-1
	2.6.8	Cathodic Protection System	2.6.8-1
	2.6.9	Plant Security System	2.6.9-1
	2.6.10	Main Generation System	2.6.10-1
	2.6.11	Excitation and Voltage Regulation System	2.6.11-1
2.7	HVAC Systems		2.7.1-1
	2.7.1	Nuclear Island Nonradioactive Ventilation System	2.7.1-1
	2.7.2	Central Chilled Water System	2.7.2-1
	2.7.3	Annex/Auxiliary Building Nonradioactive Ventilation System	2.7.3-1
	2.7.4	Diesel Generator Building Ventilation System	2.7.4-1
	2.7.5	Radiologically Controlled Area Ventilation System	2.7.5-1
	2.7.6	Containment Air Filtration System	2.7.6-1
	2.7.7	Containment Recirculation Cooling System	2.7.7-1
	2.7.8	Radwaste Building HVAC System	2.7.8-1
	2.7.9	Turbine Island Building Ventilation System	2.7.9-1
	2.7.10	Health Physics and Hot Machine Shop HVAC System	2.7.10-1
	2.7.11	Hot Water Heating System	2.7.11-1
3.0	NON-SYSTEM BASED DESIGN DESCRIPTIONS AND ITAAC		
3.1	Emergency Response Facilities		3.1-1
3.2	Human Factors Engineering		3.2-1
3.3	Buildings		3.3-1
3.4	Initial Test Program		3.4-1
3.5	Radiation Monitoring		3.5-1
3.6	Reactor Coolant Pressure Boundary Leak Detection		3.6-1
3.7	Design Reliability Assurance Program		3.7-1
4.0	INTERFACE REQUIREMENTS		4.0-1
5.0	SITE PARAMETERS		5.0-1

*Underlined sections - title only, no entry for Design Certification.

IFSAR TIER 1 LIST OF FIGURES

Figure	Title	Page
2.1.2-1	Reactor Coolant System	2.1.2-30
2.1.2-2	Flow Transient for Four Cold Legs in Operation, Four Pumps Coasting Down	2.1.2-32
2.1.3-1	Reactor Upper Internals Rod Guide Arrangement	2.1.3-13
2.1.3-2	Rod Cluster Control and Drive Rod Arrangement	2.1.3-14
2.1.3-3	Reactor Vessel Arrangement	2.1.3-15
2.2.1-1	Containment System	2.2.1-19
2.2.2-1	Passive Containment Cooling System	2.2.2-16
2.2.3-1	Passive Core Cooling System	2.2.3-31
2.2.4-1	Steam Generator System	2.2.4-23
2.2.5-1	Main Control Room Emergency Habitability System	2.2.5-17
2.3.1-1	Component Cooling Water System	2.3.1-5
2.3.2-1	Chemical and Volume Control System	2.3.2-15
2.3.3-1	Standby Diesel Fuel Oil System	2.3.3-5
2.3.4-1	Fire Protection System	2.3.4-7
2.3.6-1	Normal Residual Heat Removal System	2.3.6-17
2.3.7-1	Spent Fuel Pool Cooling System	2.3.7-12
2.3.8-1	Service Water System	2.3.8-5
2.3.10-1	Liquid Radwaste System	2.3.10-9
2.3.11-1	Gaseous Radwaste System	2.3.11-5
2.3.13-1	Primary Sampling System	2.3.13-8
2.3.29-1	Radioactive Waste Drain System	2.3.29-3
2.4.1-1	Main and Startup Feedwater System	2.4.1-4
2.5.2-1	Protection and Safety Monitoring System	2.5.2-20
2.6.1-1	Main ac Power System	2.6.1-11
2.6.2-1	Non-Class 1E dc and Uninterruptible Power Supply System	2.6.2-4
2.6.3-1	Class 1E dc and Uninterruptible Power Supply System	2.6.3-16
2.7.1-1	Nuclear Island Nonradioactive Ventilation System	2.7.1-12
2.7.2-1	Central Chilled Water System	2.7.2-5
2.7.3-1	Annex/Auxiliary Building Nonradioactive Ventilation System	2.7.3-5
2.7.4-1	Diesel Generator Building Ventilation System	2.7.4-5
2.7.6-1	Containment Air Filtration System	2.7.6-5
3.2-1	Human Factors Engineering (HFE) Design and Implementation Process	3.2-7
3.3-1	Nuclear Island Section A-A	3.3-33
3.3-2	Nuclear Island Section B-B	3.3-34
3.3-3	Nuclear Island Plan View at Elevation 66'-6"	3.3-35
3.3-4	Nuclear Island Plan View at Elevation 82'-6"	3.3-36
3.3-5	Nuclear Island Plan View at Elevation 96'-6"	3.3-37
3.3-6	Nuclear Island Plan View at Elevation 100'-0"	3.3-38
3.3-7	Nuclear Island Plan View at Elevation 117'-6"	3.3-39
3.3-8	Nuclear Island Plan View at Elevation 135'-3"	3.3-40
3.3-9	Nuclear Island Plan View at Elevation 153'-3" and 160'-6"	3.3-41
3.3-10	Nuclear Island Plan View at Shield Building Roof	3.3-42
3.3-11A	Annex Building Plan View at Elevation 100'-0"	3.3-43

IFSAR TIER 1 LIST OF FIGURES (Cont.)

Figure	Title	Page
3.3-11B	Turbine Building General Arrangement Plan at Elevation 100'-0"	3.3-44
3.3-12	Annex Building Plan View at Elevation 117'-6"	3.3-45
3.3-13	Annex Building Plan View at Elevation 135'-3"	3.3-46
3.3-14	Nuclear Island Dimensions at Elevation 66'-6"	3.3-47
5.0-1	Horizontal Design Response Spectra Safe Shutdown Earthquake	5.0-8
5.0-2	Vertical Design Response Spectra Safe Shutdown Earthquake	5.0-9
5.0-3	Horizontal HRHF Envelope Response Spectra Safe Shutdown Earthquake	5.0-10
5.0-4	Vertical HRHF Envelope Response Spectra Safe Shutdown Earthquake	5.0-11

1.0 Introduction

1.1 Definitions

The following definitions apply to terms used in the design descriptions and associated inspections, tests, analyses, and acceptance criteria (ITAAC).

Acceptance Criteria means the performance, physical condition, or analysis result for a structure, system, or component that demonstrates that the design commitment is met.

Analysis means a calculation, mathematical computation, or engineering or technical evaluation. Engineering or technical evaluations could include, but are not limited to, comparisons with operating experience or design of similar structures, systems, or components.

As-built means the physical properties of a structure, system, or component following the completion of its installation or construction activities at its final location at the plant site. In cases where it is technically justifiable, determination of physical properties of the as-built structure, system, or component may be based on measurements, inspections, or tests that occur prior to installation, provided that subsequent fabrication, handling, installation, and testing does not alter the properties.

Column Line is the designation applied to a plant reference grid used to define the location of building walls and columns. Column lines may not represent the center line of walls and columns.

Design Commitment means that portion of the design description that is verified by ITAAC.

Design Description means that portion of the design that is certified.

Design Plant Grade means the elevation of the soil around the nuclear island assumed in the design of the AP1000, i.e., floor elevation 100'-0".

Division (for electrical systems or electrical equipment) is the designation applied to a given safety-related system or set of components that is physically, electrically, and functionally independent from other redundant sets of components.

Floor Elevation is the designation applied to name a floor. The actual elevation may vary due to floor slope and layout requirements.

Functional Arrangement (for a system) means the physical arrangement of systems and components to provide the service for which the system is intended, and which is described in the system design description.

Inspect or **Inspection** means visual observations, physical examinations, or reviews of records based on visual observation or physical examination that compare the structure, system, or component condition to one or more design commitments. Examples include walkdowns, configuration checks, measurements of dimensions, or nondestructive examinations.

Inspect for Retrievability of a display means to visually observe that the specified information appears on a monitor when summoned by the operator.

$\mathbf{L_a}$ is the maximum allowable containment leakage as defined in 10 CFR 50 Appendix J.

Physical Arrangement (for a structure) means the arrangement of the building features (e.g., floors, ceilings, walls, and basemat) and of the structures, systems, and components within, which are described in the building design description.

Qualified for Harsh Environment means that equipment can withstand the environmental conditions that would exist before, during, and following a design basis accident without loss of its safety function, for the time required to perform the safety function. These environmental conditions include applicable time-dependent temperature and pressure profiles, humidity, chemical effects, radiation, aging, submergence, and their synergistic effects which have a significant effect on the equipment performance. Equipment identified in the Design Description as being Qualified for Harsh Environment includes the:

a. equipment itself
b. sensors, switches and lubricants that are an integral part of the equipment
c. electrical components connected to the equipment (wiring, cabling and terminations)

Items b and c are Qualified for Harsh Environment only when they are necessary to support operation of the equipment to meet its safety-related function listed in the Design Description table and to the extent such equipment is located in a harsh environment during or following a design basis accident.

Sensor means a transmitter, resistance temperature detector, thermocouple or other transducer, plus associated cables, connectors, preamplifiers, reference junction boxes, or other signal processing equipment that is located in the immediate proximity of the sensor and subject to the same environmental conditions.

Site Grade means the as-built elevation of the soil to the west side of the nuclear island. Adjacent buildings are located on the other sides of the nuclear island.

Tag Number in the ITAACs represents the complete tag number or a portion of the tag number used to identify the actual hardware (or associated software). For instrumentation, the tag number identified in the ITAACs does not include the type of instrument (for example, the Containment Exhaust Fan A Flow Sensor, VFS-11A, does not include the designators FE [flow element] or FT [flow transmitter], which would appear on the actual hardware or in the associated software). This is because the designator VFS-11A and the equipment description are sufficient to uniquely identify the channel associated with the designated instrument function, and this method of identification eliminates the need to list every portion of the instrumentation channel required to perform the function. In most cases, the channel number includes physical hardware. There are, however, a few places where the channel number represents only a calculation in software. In those cases, the channel data can be displayed. In many instances, the word "sensor" is used in the equipment description to identify that the item is an instrument.

Test means the actuation, operation, or establishment of specified conditions to evaluate the performance or integrity of as-built structures, systems, or components, unless explicitly stated otherwise.

Transfer Open (Closed) means to move from a closed (open) position to an open (closed) position.

Type Test means a test on one or more sample components of the same type and manufacturer to qualify other components of the same type and manufacturer. A type test is not necessarily a test of the as-built structures, systems, or components.

UA of a heat exchanger means the product of the heat transfer coefficient and the surface area.

1.2 General Provisions

The following general provisions are applicable to the design descriptions and associated ITAAC.

Treatment of Individual Items

The absence of any discussion or depiction of an item in the design description or accompanying figures shall not be construed as prohibiting a licensee from utilizing such an item, unless it would prevent an item from performing its safety functions as discussed or depicted in the design description or accompanying figures.

If an inspections, tests, or analyses (ITA) requirement does not specify the temperature or other conditions under which a test must be run, then the test conditions are not constrained.

When the term "operate," "operates," or "operation" is used with respect to an item discussed in the acceptance criteria, it refers to the actuation and running of the item. When the term "exist," "exists," or "existence" is used with respect to an item discussed in the acceptance criteria, it means that the item is present and meets the design commitment.

Implementation of ITAAC

The ITAACs are provided in tables with the following three-column format:

Design Commitment	Inspections, Tests, Analyses	Acceptance Criteria

Each design commitment in the left-hand column of the ITAAC tables has an associated ITA requirement specified in the middle column of the tables.

The identification of a separate ITA entry for each design commitment shall not be construed to require that separate inspections, tests, or analyses must be performed for each design commitment. Instead, the activities associated with more than one ITA entry may be combined, and a single inspection, test, or analysis may be sufficient to implement more than one ITA entry.

An ITA may be performed by the licensee of the plant or by its authorized vendors, contractors, or consultants. Furthermore, an ITA may be performed by more than a single individual or group, may be implemented through discrete activities separated by time, and may be performed at any time prior to fuel load (including before issuance of the combined license for those ITAACs that do not necessarily pertain to as-installed equipment). Additionally, an ITA may be performed as part of the activities that are required to be performed under 10 CFR Part 50 (including, for example, the quality assurance (QA) program required under Appendix B to Part 50); therefore, an ITA need not be performed as a separate or discrete activity.

Many of the acceptance criteria include the words “A report exists and concludes that…” When these words are used, it indicates that the ITAAC for that design commitment will be met when it is confirmed that appropriate documentation exists and the documentation shows that the design commitment is met. Appropriate documentation can be a single document or a collection of documents that show that the stated acceptance criteria are met. Examples of appropriate documentation include design reports, test reports, inspection reports, analysis reports, evaluation reports, design and manufacturing procedures, certified data sheets, commercial dedication procedures and records, quality assurance records, calculation notes, and equipment qualification data packages. For plants at sites which are qualified using the hard rock high frequency (HRHF) ground motion response spectra (GMRS), high frequency seismic screening and

qualification testing required as a result of the evaluation of potential high frequency sensitive components is included in the equipment qualification data packages.

Many entries in the ITA column of the ITAAC tables include the words "Inspection will be performed for the existence of a report verifying…" When these words are used it indicates that the ITA is tests, type tests, analyses, or a combination of tests, type tests, and analyses and a report will be produced documenting the results. This report will be available to inspectors.

Many ITAAC are only a reference to another Tier 1 location, either a section, subsection, or ITAAC table entry (for example, "See Tier 1 Material…"). A reference to another ITAAC location is always in both the ITA and acceptance criteria columns for a design commitment. This reference is an indication that the ITA and acceptance criteria for that design commitment are satisfied when the referenced ITA are completed and the acceptance criteria for the referenced Tier 1 sections, subsections, or table entries are satisfied. If a complete Tier 1 section is referenced, this indicates that all the ITA and acceptance criteria in that section must be met before the referencing design commitment is satisfied.

Discussion of Matters Related to Operations

In some cases, the design descriptions in this document refer to matters that relate to operation, such as normal valve or breaker alignment during normal operation modes. Such discussions are provided solely to place the design description provisions in context (for example, to explain automatic features for opening or closing valves or breakers upon off-normal conditions). Such discussions shall not be construed as requiring operators during operation to take any particular action (for example, to maintain valves or breakers in a particular position during normal operation).

Interpretation of Figures

In many but not all cases, the design descriptions in Section 2 include one or more figures. The figures may represent a functional diagram, general structural representation, or another general illustration. For instrumentation and control (I&C) systems, figures may also represent aspects of the relevant logic of the system or part of the system. Unless specified explicitly, the figures are not indicative of the scale, location, dimensions, shape, or spatial relationships of as-built structures, systems, and components. In particular, the as-built attributes of structures, systems, and components may vary from the attributes depicted on the figures, provided that those safety functions discussed in the design description pertaining to the figure are not adversely affected.

Maximum Reactor Core Thermal Power

The initial rated reactor core thermal power for the AP1000 certified design is 3400 megawatts thermal (MWt).

1.3 Figure Legend

The conventions used in this section are for figures described in the design description. The figure legend is provided for information and is not part of the Tier 1 Material.

VALVES

Valve

Check Valve

Relief Valve

VALVE OPERATORS

Operator Of Unspecified Type

Motor Operator

Solenoid Operator

Pneumatic/Hydraulic Operator

Pneumatic Operator

Squib Valve

MECHANICAL EQUIPMENT

Centrifugal Pump	
Pump Type Not Specified	
Tank	
Centrifugal Fan	
Axial Fan	
Heat Exchanger	
Vent	V
Drain	D
Pipe Cap	
Blind Flange	
Orifice	

DAMPERS

Gravity Or Manually Operated Damper

Remotely Operated Damper

ELECTRICAL EQUIPMENT

Battery

Circuit Breaker

Disconnect Switch

Isolation

Transformer

Fuse

Heater

Generator

MISCELLANEOUS

A component that is part of the system functional arrangement shown on the figure and is included in the design commitments for the system.

A component that is part of the system functional arrangement shown on the figure.

A system or component of another system that is not part of the system functional arrangement shown on the figure.

A functional connection to another system that is not part of the system functional arrangement shown on the figure.

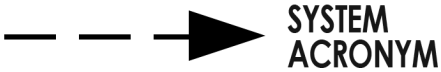

ASME CODE CLASS BREAK

An ASME Code class break is identified by a single line to the designated location for the class break, as shown in the example below (see note 1).

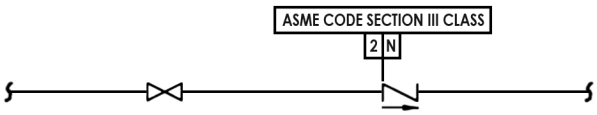

NOTES:

1. The header, "ASME Code Section III Class," must appear at least once on each figure on which ASME class breaks are shown, but need not appear at every class break shown on a figure.
   N Indicates Non-ASME Code Section III

1.4 List of Acronyms and Abbreviations

The acronyms presented in this section are used in the Tier 1 Material. The acronyms are provided for information and are not part of the Tier 1 Material.

ac	Alternating Current
AC	Acceptance Criteria
ACC	Accumulator
ADS	Automatic Depressurization System
AHU	Air Handling Units
ASME	American Society of Mechanical Engineers
BTU	British Thermal Unit
CAS	Compressed Air System
CAV	Cumulative Absolute Velocity
CCS	Component Cooling Water System
CDM	Certified Design Material
CDS	Condensate System
CFR	Code of Federal Regulations
CIV	Containment Isolation Valve
CL	Cold Leg
CMT	Core Makeup Tank
CNS	Containment System
COL	Combined Operating License/Combined License
CRDM	Control Rod Drive Mechanism
CSA	Control Support Area
CST	Condensate Storage Tank
CVS	Chemical and Volume Control System
DAC	Design Acceptance Criteria
DAS	Diverse Actuation System
DBA	Design Basis Accident
dc	Direct Current
DC	Design Commitment
DDS	Data Display and Processing System
DOS	Standby Diesel Fuel Oil System
DPU	Distributed Processing Unit
D-RAP	Design Reliability Assurance Program
DTS	Demineralized Water Treatment System

List of Acronyms and Abbreviations (cont.)

DVI	Direct Vessel Injection
DWS	Demineralized Water Transfer and Storage System
ECS	Main ac Power System
EDS	Non-Class 1E dc and Uninterruptible Power Supply System
EFS	Communication System
EGS	Grounding and Lightening Protection System
ELS	Plant Lighting System
EMI	Electromagnetic Interference
ERF	Emergency Response Facility
ESD	Electrostatic Discharge
ESF	Emergency Safety Features
ESFAS	Engineering Safety Feature Actuation System
F	Fahrenheit
FHM	Fuel Handling Machine
FHS	Fuel Handling and Refueling System
FID	Fixed Incore Detector
FPS	Fire Protection System
ft	Feet
FTS	Fuel Transfer System
FWS	Main and Startup Feedwater System
gpm	Gallons per Minute
HEPA	High Efficiency Particulate Air
HFE	Human Factors Engineering
HL	Hot Leg
hr	Hour
HSI	Human-System Interface
HVAC	Heating, Ventilation, and Air Conditioning
HX	Heat Exchanger
Hz	Hertz
I&C	Instrumentation and Control
IDS	Class 1E dc and Uninterruptible Power Supply System
IIS	In-core Instrumentation System
ILRT	Integrated Leak Rate Test
IHP	Integrated Head Package
in	Inches

List of Acronyms and Abbreviations (cont.)

I/O	Input/Output
I&C	Instrumentation and Control
IRC	Inside Reactor Containment
IRWST	In-containment Refueling Water Storage Tank
ISI	Inservice Inspection
IST	Inservice Testing
ITA	Inspections, Tests, Analyses
ITAAC	Inspections, Tests, Analyses, and Acceptance Criteria
LBB	Leak Before Break
LTOP	Low Temperature Overpressure Protection
MBtu	Million British Thermal Units
MCC	Motor Control Center
MCR	Main Control Room
MHS	Mechanical Handling System
MMIS	Man-machine Interface System
MOV	Motor-operated Valve
MSIV	Main Steam Isolation Valve
MSLB	Main Steam Line Break
MSS	Main Steam System
MTS	Main Turbine System
MW	Megawatt
MWe	Megawatt Electric
MWt	Megawatt Thermal
N/A	Not Applicable
NDE	Nondestructive Examination
NI	Nuclear Island
NSSS	Nuclear Steam Supply System
OCS	Operation and Control Centers System
ORC	Outside Reactor Containment
ORE	Occupational Radiation Exposure
OSA	Operational Sequence Analyses
OSC	Operations Support Center
PAR	Passive Autocatalytic Recombiner
PCCAWST	Passive Containment Cooling Ancillary Water Storage Tank

List of Acronyms and Abbreviations (cont.)

PCCWST	Passive Containment Cooling Water Storage Tank
PCS	Passive Containment Cooling System
P&ID	Piping and Instrument Diagram
PGS	Plant Gas System
pH	Potential of Hydrogen
PLS	Plant Control System
PMS	Protection and Safety Monitoring System
PORV	Power-operated Relief Valve
PRA	Probabilistic Risk Assessment
PRHR	Passive Residual Heat Removal
psia	Pounds per Square Inch Absolute
PSS	Primary Sampling System
PXS	Passive Core Cooling System
PWR	Pressurized Water Reactor
RAP	Reliability Assurance Program
RAT	Reserve Auxiliary Transformer
RCDT	Reactor Coolant Drain Tank
RCP	Reactor Coolant Pump
RCPB	Reactor Coolant Pressure Boundary
RCS	Reactor Coolant System
RFI	Radio Frequency Interference
RM	Refueling Machine
RMS	Radiation Monitoring System
RNS	Normal Residual Heat Removal System
RPV	Reactor Pressure Vessel
RSR	Remote Shutdown Room
RSW	Remote Shutdown Workstation
RTD	Resistance Temperature Detector
RXS	Reactor System
RV	Reactor Vessel
scf	Standard Cubic Feet
scfm	Standard Cubic Feet per Minute
SFP	Spent Fuel Pool
SFS	Spent Fuel Pool Cooling System
SG	Steam Generator

List of Acronyms and Abbreviations (cont.)

SGS	Steam Generator System
SJS	Seismic Monitoring System
SMS	Special Monitoring System
SSAR	Standard Safety Analysis Report
SSCs	Structures, Systems, and Components
SSE	Safe Shutdown Earthquake
SWC	Surge Withstand Capability
SWS	Service Water System
TID	Total Integrated Dose
TSC	Technical Support Center
UAT	Unit Auxiliary Transformer
UBC	Uniform Building Code
UPS	Uninterruptible Power Supply
V	Volt
VAS	Radiologically Controlled Area Ventilation System
VBS	Nuclear Island Nonradioactive Ventilation System
VCS	Containment Recirculation Cooling System
VES	Main Control Room Emergency Habitability System
VFS	Containment Air Filtration System
VHS	Health Physics and Hot Machine Shop Areas
VLS	Containment Hydrogen Control System
VWS	Central Chilled Water System
VXS	Annex/Auxiliary Building Nonradioactive Ventilation System
VZS	Diesel Generator Building Ventilation System
WGS	Gaseous Radwaste System
WLS	Liquid Radwaste System
WSS	Solid Radwaste System
ZOS	Onsite Standby Power System

2.1 Reactor

2.1.1 Fuel Handling and Refueling System

Design Description

The fuel handling and refueling system (FHS) transfers fuel assemblies and core components during fueling operations and stores new and spent fuel assemblies in the new and spent fuel storage racks. The refueling machine (RM) and the fuel transfer tube are operated during refueling mode. The fuel handling machine (FHM) is operated during normal modes of plant operation, including startup, power operation, cooldown, shutdown and refueling.

The component locations of the FHS are as shown in Table 2.1.1-2.

1. The functional arrangement of the FHS is as described in the Design Description of this Section 2.1.1.

2. The FHS has the RM, the FHM, and the new and spent fuel storage racks.

3. The FHS preserves containment integrity by isolation of the fuel transfer tube penetrating containment.

4. The RM and FHM/spent fuel handling tool (SFHT) gripper assemblies are designed to prevent opening while the weight of the fuel assembly is suspended from the grippers.

5. The lift height of the RM mast and FHM hoist(s) is limited such that the minimum required depth of water shielding is maintained.

6. The RM and FHM are designed to maintain their load carrying and structural integrity functions during a safe shutdown earthquake.

7. The new and spent fuel storage racks maintain the effective neutron multiplication factor required by 10 CFR 50.68 limits during normal operation, design basis seismic events, and design basis dropped spent fuel assembly accidents over the spent fuel storage racks.

Inspections, Tests, Analyses, and Acceptance Criteria

Table 2.1.1-1 specifies the inspections, tests, analyses, and associated acceptance criteria for the FHS.

Table 2.1.1-1
Inspections, Tests, Analyses, and Acceptance Criteria

Design Commitment	Inspections, Tests, Analyses	Acceptance Criteria
1. The functional arrangement of the FHS is as described in the Design Description of this Section 2.1.1.	Inspection of the as-built system will be performed.	The as-built FHS conforms with the functional arrangement as described in the Design Description of this Section 2.1.1.
2. The FHS has the refueling machine (RM), the fuel handling machine (FHM), and the new and spent fuel storage racks.	Inspection of the system will be performed.	The FHS has the RM, the FHM, and the new and spent fuel storage racks.
3. The FHS preserves containment integrity by isolation of the fuel transfer tube penetrating containment.	See Tier 1 Material, Table 2.2.1-3, items 1 and 7.	See Tier 1 Material, Table 2.2.1-3, items 1 and 7.
4. The RM and FHM/spent fuel handling tool (SFHT) gripper assemblies are designed to prevent opening while the weight of the fuel assembly is suspended from the grippers.	The RM and FHM/SFHT gripper assemblies will be tested by operating the open controls of the gripper while suspending a dummy fuel assembly.	The RM and FHM/SFHT gripper assemblies will not open while suspending a dummy test assembly.
5. The lift height of the RM mast and FHM hoist(s) is limited such that the minimum required depth of water shielding is maintained.	The RM and FHM will be tested by attempting to raise a dummy fuel assembly.	The bottom of the dummy fuel assembly cannot be raised to within 24 ft, 6 in. of the operating deck floor.
6. The RM and FHM are designed to maintain their load carrying and structural integrity functions during a safe shutdown earthquake.	i) Inspection will be performed to verify that the RM and FHM are located on the nuclear island. ii) Type test, analysis, or a combination of type tests and analyses of the RM and FHM will be performed.	i) The RM and FHM are located on the nuclear island. ii) A report exists and concludes that the RM and FHM can withstand seismic design basis dynamic loads without loss of load carrying or structural integrity functions.

Table 2.1.1-1 (cont.)
Inspections, Tests, Analyses, and Acceptance Criteria

Design Commitment	Inspections, Tests, Analyses	Acceptance Criteria
7. The new and spent fuel storage racks maintain the effective neutron multiplication factor required by 10 CFR 50.68 limits during normal operation, design basis seismic events, and design basis dropped spent fuel assembly accidents over the spent fuel storage racks.	i) Analyses will be performed to calculate the effective neutron multiplication factor in the new and spent fuel storage racks during normal conditions.	i) The calculated effective neutron multiplication factor for the new and spent fuel storage racks meets the requirements of 10 CFR 50.68(1) limits under normal conditions.
	ii) Inspection will be performed to verify that the new and spent fuel storage racks are located on the nuclear island.	ii) The new and spent fuel storage racks are located on the nuclear island.
	iii) Seismic analysis of the new and spent fuel storage racks will be performed.	iii) A report exists and concludes that the new and spent fuel racks can withstand seismic design basis dynamic loads and maintain the calculated effective neutron multiplication factor required by 10 CFR 50.68(1) limits.
	iv) Analysis of the new and spent fuel storage racks under design basis dropped spent fuel assembly loads will be performed.	iv) A report exists and concludes that the new and spent fuel racks can withstand design basis dropped spent fuel assembly loads and maintain the calculated effective neutron multiplication factor required by 10 CFR 50.68(1) limits.

Note:

1. The requirements of 10 CFR 50.68 are summarized as follows:
   - For new fuel storage racks:
     - The effective neutron multiplication factor (K-effective) must not exceed 0.95 when flooded with unborated water and
     - K-effective must not exceed 0.98 with optimum moderator conditions.
   - For spent fuel storage racks:
     - If methodology does not take credit for soluble boron:
       - K-effective must not exceed 0.95 when flooded with unborated water.
     - Or if methodology takes credit for soluble boron:
       - K-effective must not exceed 0.95 when flooded with borated water and
       - K-effective must remain below 1.0 when flooded with unborated water.

Table 2.1.1-2

Component Name	Tag No.	Component Location
Refueling Machine	FHS-FH-01	Containment
Fuel Handling Machine	FHS-FH-02	Auxiliary Building
Spent Fuel Storage Racks	FHS-FS-02	Auxiliary Building
New Fuel Storage Racks	FHS-FS-01	Auxiliary Building
Fuel Transfer Tube	FHS-FT-01	Auxiliary Building/Containment

2.1.2 Reactor Coolant System

Design Description

The reactor coolant system (RCS) removes heat from the reactor core and transfers it to the secondary side of the steam generators for power generation. The RCS contains two vertical U-tube steam generators, four sealless reactor coolant pumps (RCPs), and one pressurizer.

The RCS is as shown in Figure 2.1.2-1 and the component locations of the RCS are as shown in Table 2.1.2-5.

1. The functional arrangement of the RCS is as described in the Design Description of this Section 2.1.2.

2. a) The components identified in Table 2.1.2-1 as ASME Code Section III are designed and constructed in accordance with ASME Code Section III requirements.

   b) The piping identified in Table 2.1.2-2 as ASME Code Section III is designed and constructed in accordance with ASME Code Section III requirements.

3. a) Pressure boundary welds in components identified in Table 2.1.2-1 as ASME Code Section III meet ASME Code Section III requirements.

   b) Pressure boundary welds in piping identified in Table 2.1.2-2 as ASME Code Section III meet ASME Code Section III requirements.

4. a) The components identified in Table 2.1.2-1 as ASME Code Section III retain their pressure boundary integrity at their design pressure.

   b) The piping identified in Table 2.1.2-2 as ASME Code Section III retains its pressure boundary integrity at its design pressure.

5. a) The seismic Category I equipment identified in Table 2.1.2-1 can withstand seismic design basis loads without loss of safety function.

   b) Each of the lines identified in Table 2.1.2-2 for which functional capability is required is designed to withstand combined normal and seismic design basis loads without a loss of its functional capability.

6. Each of the as-built lines identified in Table 2.1.2-2 as designed for leak before break (LBB) meets the LBB criteria, or an evaluation is performed of the protection from the dynamic effects of a rupture of the line.

7. a) The Class 1E equipment identified in Table 2.1.2-1 as being qualified for a harsh environment can withstand the environmental conditions that would exist before, during, and following a design basis accident without loss of safety function for the time required to perform the safety function.

b) The Class 1E components identified in Table 2.1.2-1 are powered from their respective Class 1E division.

c) Separation is provided between RCS Class 1E divisions, and between Class 1E divisions and non-Class 1E cable.

8. The RCS provides the following safety-related functions:

a) The pressurizer safety valves provide overpressure protection in accordance with Section III of the ASME Boiler and Pressure Vessel Code.

b) The reactor coolant pumps (RCPs) have a rotating inertia to provide RCS flow coastdown on loss of power to the pumps.

c) Each RCP flywheel assembly can withstand a design overspeed condition.

d) The RCS provides automatic depressurization during design basis events.

e) The RCS provides emergency letdown during design basis events.

9. The RCS provides the following nonsafety-related functions:

a) The RCS provides circulation of coolant to remove heat from the core.

b) The RCS provides the means to control system pressure.

c) The pressurizer heaters trip after a signal is generated by the PMS.

10. Safety-related displays identified in Table 2.1.2-1 can be retrieved in the main control room (MCR).

11. a) Controls exist in the MCR to cause the remotely operated valves identified in Table 2.1.2-1 to perform active functions.

b) The valves identified in Table 2.1.2-1 as having protection and safety monitoring system (PMS) control perform an active safety function after receiving a signal from the PMS.

c) The valves identified in Table 2.1.2-1 as having diverse actuation system (DAS) control perform an active safety function after receiving a signal from DAS.

12. a) The valves identified in Table 2.1.2-1 perform an active safety-related function to change position as indicated in the table.

b) After loss of motive power, the remotely operated valves identified in Table 2.1.2-1 assume the indicated loss of motive power position.

13. a) Controls exist in the MCR to trip the RCPs.

    b) The RCPs trip after receiving a signal from the PMS.

    c) The RCPs trip after receiving a signal from the DAS.

14. Controls exist in the MCR to cause the components identified in Table 2.1.2-3 to perform the listed function.

15. Displays of the parameters identified in Table 2.1.2-3 can be retrieved in the MCR.

Inspections, Tests, Analyses, and Acceptance Criteria

Table 2.1.2-4 specifies the inspections, tests, analyses, and associated acceptance criteria for the RCS.

Table 2.1.2-1

Equipment Name	Tag No.	ASME Code Section III	Seismic Cat. I	Remotely Operated Valve	Class 1E/ Qual. for Harsh Envir.	Safety-Related Display	Control PMS/ DAS	Active Function	Loss of Motive Power Position
Steam Generator 1	RCS-MB-01	Yes	Yes	-	-/-	-	-	-	-
Steam Generator 2	RCS-MB-02	Yes	Yes	-	-/-	-	-	-	-
RCP 1A	RCS-MP-01A	Yes	Yes	-	No/No	No	Yes/Yes (pump trip)	No	-
RCP 1B	RCS-MP-01B	Yes	Yes	-	No/No	No	Yes/Yes (pump trip)	No	-
RCP 2A	RCS-MP-02A	Yes	Yes	-	No/No	No	Yes/Yes (pump trip)	No	-
RCP 2B	RCS-MP-02B	Yes	Yes	-	No/No	No	Yes/Yes (pump trip)	No	-
Pressurizer	RCS-MV-02	Yes	Yes	-	No/No (heaters)	-	Yes/No (heater trip)	No	-
Automatic Depressurization System (ADS) Sparger A	PXS-MW-01A	Yes	Yes	-	-/-	-	-/-	-	-
ADS Sparger B	PXS-MW-01B	Yes	Yes	-	-/-	-	-/-	-	-

Note: Dash (-) indicates not applicable.

Table 2.1.2-1 (cont.)

Equipment Name	Tag No.	ASME Code Section III	Seismic Cat. I	Remotely Operated Valve	Class 1E/ Qual. for Harsh Envir.	Safety-Related Display	Control PMS/ DAS	Active Function	Loss of Motive Power Position
Pressurizer Safety Valve	RCS-PL-V005A	Yes	Yes	No	-/-	No	-/-	Transfer Open/ Transfer Closed	-
Pressurizer Safety Valve	RCS-PL-V005B	Yes	Yes	No	-/-	No	-/-	Transfer Open/ Transfer Closed	-
First-stage ADS Motor-operated Valve (MOV)	RCS-PL-V001A	Yes	Yes	Yes	Yes/Yes	Yes (Valve Position)	Yes/Yes	Transfer Open	As Is
First-stage ADS MOV	RCS-PL-V001B	Yes	Yes	Yes	Yes/Yes	Yes (Valve Position)	Yes/Yes	Transfer Open	As Is
Second-stage ADS MOV	RCS-PL-V002A	Yes	Yes	Yes	Yes/Yes	Yes (Valve Position)	Yes/Yes	Transfer Open	As Is
Second-stage ADS MOV	RCS-PL-V002B	Yes	Yes	Yes	Yes/Yes	Yes (Valve Position)	Yes/Yes	Transfer Open	As Is
Third-stage ADS MOV	RCS-PL-V003A	Yes	Yes	Yes	Yes/Yes	Yes (Valve Position)	Yes/Yes	Transfer Open	As Is

Note: Dash (-) indicates not applicable.

Table 2.1.2-1 (cont.)

Equipment Name	Tag No.	ASME Code Section III	Seismic Cat. I	Remotely Operated Valve	Class 1E/ Qual. for Harsh Envir.	Safety-Related Display	Control PMS/ DAS	Active Function	Loss of Motive Power Position
Third-stage ADS MOV	RCS-PL-V003B	Yes	Yes	Yes	Yes/Yes	Yes (Valve Position)	Yes/Yes	Transfer Open	As Is
Fourth-stage ADS Squib Valve	RCS-PL-V004A	Yes	Yes	Yes	Yes/Yes	Yes (Valve Position)	Yes/Yes	Transfer Open	As Is
Fourth-stage ADS Squib Valve	RCS-PL-V004B	Yes	Yes	Yes	Yes/Yes	Yes (Valve Position)	Yes/Yes	Transfer Open	As Is
Fourth-stage ADS Squib Valve	RCS-PL-V004C	Yes	Yes	Yes	Yes/Yes	Yes (Valve Position)	Yes/Yes	Transfer Open	As Is
Fourth-stage ADS Squib Valve	RCS-PL-V004D	Yes	Yes	Yes	Yes/Yes	Yes (Valve Position)	Yes/Yes	Transfer Open	As Is
ADS Discharge Header A Vacuum Relief Valve	RCS-PL-V010A	Yes	Yes	No	Yes/Yes	No	No/No	Transfer Open	-
ADS Discharge Header B Vacuum Relief Valve	RCS-PL-V010B	Yes	Yes	No	Yes/Yes	No	No/No	Transfer Open	-
First-stage ADS Isolation MOV	RCS-PL-V011A	Yes	Yes	Yes	Yes/Yes	Yes (Valve Position)	Yes/Yes	Transfer Open	As Is
First-stage ADS Isolation MOV	RCS-PL-V011B	Yes	Yes	Yes	Yes/Yes	Yes (Valve Position)	Yes/Yes	Transfer Open	As Is
Second-stage ADS Isolation MOV	RCS-PL-V012A	Yes	Yes	Yes	Yes/Yes	Yes (Valve Position)	Yes/Yes	Transfer Open	As Is

Note: Dash (-) indicates not applicable.

Table 2.1.2-1 (cont.)

Equipment Name	Tag No.	ASME Code Section III	Seismic Cat. I	Remotely Operated Valve	Class 1E/ Qual. for Harsh Envir.	Safety-Related Display	Control PMS/ DAS	Active Function	Loss of Motive Power Position
Second-stage ADS Isolation MOV	RCS-PL-V012B	Yes	Yes	Yes	Yes/Yes	Yes (Valve Position)	Yes/Yes	Transfer Open	As Is
Third-stage ADS Isolation MOV	RCS-PL-V013A	Yes	Yes	Yes	Yes/Yes	Yes (Valve Position)	Yes/Yes	Transfer Open	As Is
Third-stage ADS Isolation MOV	RCS-PL-V013B	Yes	Yes	Yes	Yes/Yes	Yes (Valve Position)	Yes/Yes	Transfer Open	As Is
Fourth-stage ADS MOV	RCS-PL-V014A	Yes	Yes	Yes	Yes/Yes	Yes (Valve Position)	Yes/No	None	As Is
Fourth-stage ADS MOV	RCS-PL-V014B	Yes	Yes	Yes	Yes/Yes	Yes (Valve Position)	Yes/No	None	As Is
Fourth-stage ADS MOV	RCS-PL-V014C	Yes	Yes	Yes	Yes/Yes	Yes (Valve Position)	Yes/No	None	As Is
Fourth-stage ADS MOV	RCS-PL-V014D	Yes	Yes	Yes	Yes/Yes	Yes (Valve Position)	Yes/No	None	As Is
Reactor Vessel Head Vent Valve	RCS-PL-V150A	Yes	Yes	Yes	Yes/Yes	Yes (Valve Position)	Yes/No	Transfer Open	Closed
Reactor Vessel Head Vent Valve	RCS-PL-V150B	Yes	Yes	Yes	Yes/Yes	Yes (Valve Position)	Yes/No	Transfer Open	Closed
Reactor Vessel Head Vent Valve	RCS-PL-V150C	Yes	Yes	Yes	Yes/Yes	Yes (Valve Position)	Yes/No	Transfer Open	Closed
Reactor Vessel Head Vent Valve	RCS-PL-V150D	Yes	Yes	Yes	Yes/Yes	Yes (Valve Position)	Yes/No	Transfer Open	Closed

Note: Dash (-) indicates not applicable.

Table 2.1.2-1 (cont.)

Equipment Name	Tag No.	ASME Code Section III	Seismic Cat. I	Remotely Operated Valve	Class 1E/ Qual. for Harsh Envir.	Safety-Related Display	Control PMS/ DAS	Active Function	Loss of Motive Power Position
RCS Hot Leg 1 Flow Sensor	RCS-101A	-	Yes	-	Yes/No	No	-/-	-	-
RCS Hot Leg 1 Flow Sensor	RCS-101B	-	Yes	-	Yes/No	No	-/-	-	-
RCS Hot Leg 1 Flow Sensor	RCS-101C	-	Yes	-	Yes/No	No	-/-	-	-
RCS Hot Leg 1 Flow Sensor	RCS-101D	-	Yes	-	Yes/No	No	-/-	-	-
RCS Hot Leg 2 Flow Sensor	RCS-102A	-	Yes	-	Yes/No	No	-/-	-	-
RCS Hot Leg 2 Flow Sensor	RCS-102B	-	Yes	-	Yes/No	No	-/-	-	-
RCS Hot Leg 2 Flow Sensor	RCS-102C	-	Yes	-	Yes/No	No	-/-	-	-
RCS Hot Leg 2 Flow Sensor	RCS-102D	-	Yes	-	Yes/No	No	-/-	-	-
RCS Cold Leg 1A Narrow Range Temperature Sensor	RCS-121A	-	Yes	-	Yes/Yes	No	-/-	-	-
RCS Cold Leg 1B Narrow Range Temperature Sensor	RCS-121B	-	Yes	-	Yes/Yes	No	-/-	-	-

Note: Dash (-) indicates not applicable.

Table 2.1.2-1 (cont.)

Equipment Name	Tag No.	ASME Code Section III	Seismic Cat. I	Remotely Operated Valve	Class 1E/ Qual. for Harsh Envir.	Safety-Related Display	Control PMS/ DAS	Active Function	Loss of Motive Power Position
RCS Cold Leg 1B Narrow Range Temperature Sensor	RCS-121C	-	Yes	-	Yes/Yes	No	-/-	-	-
RCS Cold Leg 1A Narrow Range Temperature Sensor	RCS-121D	-	Yes	-	Yes/Yes	No	-/-	-	-
RCS Cold Leg 2B Narrow Range Temperature Sensor	RCS-122A	-	Yes	-	Yes/Yes	No	-/-	-	-
RCS Cold Leg 2A Narrow Range Temperature Sensor	RCS-122B	-	Yes	-	Yes/Yes	No	-/-	-	-
RCS Cold Leg 2A Narrow Range Temperature Sensor	RCS-122C	-	Yes	-	Yes/Yes	No	-/-	-	-
RCS Cold Leg 2B Narrow Range Temperature Sensor	RCS-122D	-	Yes	-	Yes/Yes	No	-/-	-	-
RCS Cold Leg 1A Dual Range Temperature Sensor	RCS-125A	-	Yes	-	Yes/Yes	Yes (Wide Range)	-/-	-	-
RCS Cold Leg 2A Dual Range Temperature Sensor	RCS-125B	-	Yes	-	Yes/Yes	Yes (Wide Range)	-/-	-	-

Note: Dash (-) indicates not applicable.

Table 2.1.2-1 (cont.)

Equipment Name	Tag No.	ASME Code Section III	Seismic Cat. I	Remotely Operated Valve	Class 1E/ Qual. for Harsh Envir.	Safety-Related Display	Control PMS/ DAS	Active Function	Loss of Motive Power Position
RCS Cold Leg 1B Dual Range Temperature Sensor	RCS-125C	-	Yes	-	Yes/Yes	Yes (Wide Range	-/-	-	-
RCS Cold Leg 2B Dual Range Temperature Sensor	RCS-125D	-	Yes	-	Yes/Yes	Yes (Wide Range)	-/-	-	-
RCS Hot Leg 1 Narrow Range Temperature Sensor	RCS-131A	-	Yes	-	Yes/Yes	No	-/-	-	-
RCS Hot Leg 2 Narrow Range Temperature Sensor	RCS-131B	-	Yes	-	Yes/Yes	No	-/-	-	-
RCS Hot Leg 1 Narrow Range Temperature Sensor	RCS-131C	-	Yes	-	Yes/Yes	No	-/-	-	-
RCS Hot Leg 2 Narrow Range Temperature Sensor	RCS-131D	-	Yes	-	Yes/Yes	No	-/-	-	-
RCS Hot Leg 1 Narrow Range Temperature Sensor	RCS-132A	-	Yes	-	Yes/Yes	No	-/-	-	-
RCS Hot Leg 2 Narrow Range Temperature Sensor	RCS-132B	-	Yes	-	Yes/Yes	No	-/-	-	-

Note: Dash (-) indicates not applicable.

Table 2.1.2-1 (cont.)

Equipment Name	Tag No.	ASME Code Section III	Seismic Cat. I	Remotely Operated Valve	Class 1E/ Qual. for Harsh Envir.	Safety-Related Display	Control PMS/ DAS	Active Function	Loss of Motive Power Position
RCS Hot Leg 1 Narrow Range Temperature Sensor	RCS-132C	-	Yes	-	Yes/Yes	No	-/-	-	-
RCS Hot Leg 2 Narrow Range Temperature Sensor	RCS-132D	-	Yes	-	Yes/Yes	No	-/-	-	-
RCS Hot Leg 1 Narrow Range Temperature Sensor	RCS-133A	-	Yes	-	Yes/Yes	No	-/-	-	-
RCS Hot Leg 2 Narrow Range Temperature Sensor	RCS-133B	-	Yes	-	Yes/Yes	No	-/-	-	-
RCS Hot Leg 1 Narrow Range Temperature Sensor	RCS-133C	-	Yes	-	Yes/Yes	No	-/-	-	-
RCS Hot Leg 2 Narrow Range Temperature Sensor	RCS-133D	-	Yes	-	Yes/Yes	No	-/-	-	-
RCS Hot Leg 1 Wide Range Temperature Sensor	RCS-135A	-	Yes	-	Yes/Yes	Yes	-/-	-	-
RCS Hot Leg 2 Wide Range Temperature Sensor	RCS-135B	-	Yes	-	Yes/Yes	Yes	-/-	-	-
RCS Wide Range Pressure Sensor	RCS-140A	-	Yes	-	Yes/Yes	Yes	-/-	-	-

Note: Dash (-) indicates not applicable.

Table 2.1.2-1 (cont.)

Equipment Name	Tag No.	ASME Code Section III	Seismic Cat. I	Remotely Operated Valve	Class 1E/ Qual. for Harsh Envir.	Safety-Related Display	Control PMS/ DAS	Active Function	Loss of Motive Power Position
RCS Wide Range Pressure Sensor	RCS-140B	-	Yes	-	Yes/Yes	Yes	-/-	-	-
RCS Wide Range Pressure Sensor	RCS-140C	-	Yes	-	Yes/Yes	Yes	-/-	-	-
RCS Wide Range Pressure Sensor	RCS-140D	-	Yes	-	Yes/Yes	Yes	-/-	-	-
RCS Hot Leg 1 Level Sensor	RCS-160A	-	Yes	-	Yes/Yes	Yes	-/-	-	-
RCS Hot Leg 2 Level Sensor	RCS-160B	-	Yes	-	Yes/Yes	Yes	-/-	-	-
Passive Residual Heat Removal (PRHR) Return Line Temperature Sensor	RCS-161	-	Yes	-	Yes/Yes	Yes	-/-	-	-
Pressurizer Pressure Sensor	RCS-191A	-	Yes	-	Yes/Yes	Yes	-/-	-	-
Pressurizer Pressure Sensor	RCS-191B	-	Yes	-	Yes/Yes	Yes	-/-	-	-
Pressurizer Pressure Sensor	RCS-191C	-	Yes	-	Yes/Yes	Yes	-/-	-	-
Pressurizer Pressure Sensor	RCS-191D	-	Yes	-	Yes/Yes	Yes	-/-	-	-
Pressurizer Level Reference Leg Temperature Sensor	RCS-193A	-	Yes	-	Yes/Yes	Yes	-/-	-	-

Note: Dash (-) indicates not applicable.

Table 2.1.2-1 (cont.)

Equipment Name	Tag No.	ASME Code Section III	Seismic Cat. I	Remotely Operated Valve	Class 1E/ Qual. for Harsh Envir.	Safety-Related Display	Control PMS/ DAS	Active Function	Loss of Motive Power Position
Pressurizer Level Reference Leg Temperature Sensor	RCS-193B	-	Yes	-	Yes/Yes	Yes	-/-	-	-
Pressurizer Level Reference Leg Temperature Sensor	RCS-193C	-	Yes	-	Yes/Yes	Yes	-/-	-	-
Pressurizer Level Reference Leg Temperature Sensor	RCS-193D	-	Yes	-	Yes/Yes	Yes	-/-	-	-
Pressurizer Level Sensor	RCS-195A	-	Yes	-	Yes/Yes	Yes	-/-	-	-
Pressurizer Level Sensor	RCS-195B	-	Yes	-	Yes/Yes	Yes	-/-	-	-
Pressurizer Level Sensor	RCS-195C	-	Yes	-	Yes/Yes	Yes	-/-	-	-
Pressurizer Level Sensor	RCS-195D	-	Yes	-	Yes/Yes	Yes	-/-	-	-
RCP 1A Bearing Water Temperature Sensor	RCS-211A	-	Yes	-	Yes/Yes	No	-/-	-	-
RCP 1A Bearing Water Temperature Sensor	RCS-211B	-	Yes	-	Yes/Yes	No	-/-	-	-
RCP 1A Bearing Water Temperature Sensor	RCS-211C	-	Yes	-	Yes/Yes	No	-/-	-	-

Note: Dash (-) indicates not applicable.

Table 2.1.2-1 (cont.)

Equipment Name	Tag No.	ASME Code Section III	Seismic Cat. I	Remotely Operated Valve	Class 1E/ Qual. for Harsh Envir.	Safety-Related Display	Control PMS/ DAS	Active Function	Loss of Motive Power Position
RCP 1A Bearing Water Temperature Sensor	RCS-211D	-	Yes	-	Yes/Yes	No	-/-	-	-
RCP 1B Bearing Water Temperature Sensor	RCS-212A	-	Yes	-	Yes/Yes	No	-/-	-	-
RCP 1B Bearing Water Temperature Sensor	RCS-212B	-	Yes	-	Yes/Yes	No	-/-	-	-
RCP 1B Bearing Water Temperature Sensor	RCS-212C	-	Yes	-	Yes/Yes	No	-/-	-	-
RCP 1B Bearing Water Temperature Sensor	RCS-212D	-	Yes	-	Yes/Yes	No	-/-	-	-
RCP 2A Bearing Water Temperature Sensor	RCS-213A	-	Yes	-	Yes/Yes	No	-/-	-	-
RCP 2A Bearing Water Temperature Sensor	RCS-213B	-	Yes	-	Yes/Yes	No	-/-	-	-
RCP 2A Bearing Water Temperature Sensor	RCS-213C	-	Yes	-	Yes/Yes	No	-/-	-	-

Note: Dash (-) indicates not applicable.

Table 2.1.2-1 (cont.)

Equipment Name	Tag No.	ASME Code Section III	Seismic Cat. I	Remotely Operated Valve	Class 1E/ Qual. for Harsh Envir.	Safety-Related Display	Control PMS/ DAS	Active Function	Loss of Motive Power Position
RCP 2A Bearing Water Temperature Sensor	RCS-213D	-	Yes	-	Yes/Yes	No	-/-	-	-
RCP 2B Bearing Water Temperature Sensor	RCS-214A	-	Yes	-	Yes/Yes	No	-/-	-	-
RCP 2B Bearing Water Temperature Sensor	RCS-214B	-	Yes	-	Yes/Yes	No	-/-	-	-
RCP 2B Bearing Water Temperature Sensor	RCS-214C	-	Yes	-	Yes/Yes	No	-/-	-	-
RCP 2B Bearing Water Temperature Sensor	RCS-214D	-	Yes	-	Yes/Yes	No	-/-	-	-
RCP 1A Pump Speed Sensor	RCS-281	-	Yes	-	Yes/Yes	No	-/-	-	-
RCP 1B Pump Speed Sensor	RCS-282	-	Yes	-	Yes/Yes	No	-/-	-	-
RCP 2A Pump Speed Sensor	RCS-283	-	Yes	-	Yes/Yes	No	-/-	-	-
RCP 2B Pump Speed Sensor	RCS-284	-	Yes	-	Yes/Yes	No	-/-	-	-

Note: Dash (-) indicates not applicable.

Table 2.1.2-2

Line Name	Line Number	ASME Code Section III	Leak Before Break	Functional Capability Required
Hot Legs	RCS-L001A RCS-L001B	Yes	Yes	Yes
Cold Legs	RCS-L002A RCS-L002B RCS-L002C RCS-L002D	Yes	Yes	Yes
Pressurizer Surge Line	RCS-L003	Yes	Yes	Yes
ADS Inlet Headers	RCS-L004A/B RCS-L006A/B RCS-L030A/B RCS-L020A/B	Yes	Yes	Yes
Safety Valve Inlet Piping	RCS-L005A RCS-L005B	Yes	Yes	Yes
Safety Valve Discharge Piping	RCS-L050A/B RCS-L051A/B	Yes	No	Yes
ADS First-stage Valve Inlet Piping	RCS-L010A/B RCS-L011A/B	Yes	No	Yes
ADS Second-stage Valve Inlet Piping	RCS-L021A/B RCS-L022A/B	Yes	Yes No	Yes
ADS Third-stage Valve Inlet Piping	RCS-L131 RCS-L031A/B RCS-L032A/B	Yes	Yes Yes No	Yes
ADS Outlet Piping	RCS-L012A/B RCS-L023A/B RCS-L033A/B RCS-L061A/B RCS-L063A/B RCS-L064A/B RCS-L200 RCS-L069A/B RCS-L240A/B PXS-L130A/B	Yes	No	Yes
ADS Fourth-stage Inlet Piping	RCS-L133A/B RCS-L135A/B RCS-L136A/B RCS-L137A/B	Yes	Yes	Yes

Table 2.1.2-2 (cont.)

Line Name	Line Number	ASME Code Section III	Leak Before Break	Functional Capability Required
Pressurizer Spray Piping	RCS-L106 RCS-L110A/B RCS-L212A/B RCS-L213 RCS-L215	Yes	No	No
RNS Suction Piping	RCS-L139 RCS-L140	Yes	Yes	No
CVS Purification Piping	RCS-L111 RCS-L112	Yes	No	No

Table 2.1.2-3

Equipment	Tag No.	Display	Control Function
RCP 1A Breaker (Status)	ECS-ES-31	Yes	-
RCP 1A Breaker (Status)	ECS-ES-32	Yes	-
RCP 1B Breaker (Status)	ECS-ES-41	Yes	-
RCP 1B Breaker (Status)	ECS-ES-42	Yes	-
RCP 2A Breaker (Status)	ECS-ES-51	Yes	-
RCP 2A Breaker (Status)	ECS-ES-52	Yes	-
RCP 2B Breaker (Status)	ECS-ES-61	Yes	-
RCP 2B Breaker (Status)	ECS-ES-62	Yes	-
Pressurizer Heaters	RCS-EH-03	Yes	On/Off
Pressurizer Heaters	RCS-EH-04A	Yes	On/Off
Pressurizer Heaters	RCS-EH-04B	Yes	On/Off
Pressurizer Heaters	RCS-EH-04C	Yes	On/Off
Pressurizer Heaters	RCS-EH-04D	Yes	On/Off
Fourth-stage ADS Squib Valve (Position Indication)	RCS-PL-V004A	Yes	-
Fourth-stage ADS Squib Valve (Position Indication)	RCS-PL-V004B	Yes	-
Fourth-stage ADS Squib Valve (Position Indication)	RCS-PL-V004C	Yes	-
Fourth-stage ADS Squib Valve (Position Indication)	RCS-PL-V004D	Yes	-
Pressurizer Safety Valve (Position Indication)	RCS-PL-V005A	Yes	-
Pressurizer Safety Valve (Position Indication)	RCS-PL-V005B	Yes	-
Pressurizer Spray Valve (Position Indication)	RCS-PL-V110A	Yes	-

Note: Dash (-) indicates not applicable.

Table 2.1.2-3 (cont.)

Equipment	Tag No.	Display	Control Function
Pressurizer Spray Valve (Position Indication)	RCS-PL-V110B	Yes	-
Reactor Vessel Head Vent Valve (Position Indication)	RCS-PL-V150A	Yes	-
Reactor Vessel Head Vent Valve (Position Indication)	RCS-PL-V150B	Yes	-
Reactor Vessel Head Vent Valve (Position Indication)	RCS-PL-V150C	Yes	-
Reactor Vessel Head Vent Valve (Position Indication)	RCS-PL-V150D	Yes	-

Note: Dash (-) indicates not applicable.

Table 2.1.2-4
Inspections, Tests, Analyses, and Acceptance Criteria

Design Commitment	Inspections, Tests, Analyses	Acceptance Criteria
1. The functional arrangement of the RCS is as described in the Design Description of this Section 2.1.2.	Inspection of the as-built system will be performed.	The as-built RCS conforms with the functional arrangement described in the Design Description of this Section 2.1.2.
2.a) The components identified in Table 2.1.2-1 as ASME Code Section III are designed and constructed in accordance with ASME Code Section III requirements.	Inspection will be conducted of the as-built components as documented in the ASME design reports.	The ASME Code Section III design reports exist for the as-built components identified in Table 2.1.2-1 as ASME Code Section III.
2.b) The piping identified in Table 2.1.2-2 as ASME Code Section III is designed and constructed in accordance with ASME Code Section III requirements.	Inspection will be conducted of the as-built piping as documented in the ASME design reports.	The ASME code Section III design reports exist for the as-built piping identified in Table 2.1.2-2 as ASME Code Section III.
3.a) Pressure boundary welds in components identified in Table 2.1.2-1 as ASME Code Section III meet ASME Code Section III requirements.	Inspection of the as-built pressure boundary welds will be performed in accordance with the ASME Code Section III.	A report exists and concludes that the ASME Code Section III requirements are met for non-destructive examination of pressure boundary welds.
3.b) Pressure boundary welds in piping identified in Table 2.1.2-2 as ASME Code Section III meet ASME Code Section III requirements.	Inspection of the as-built pressure boundary welds will be performed in accordance with the ASME Code Section III.	A report exists and concludes that the ASME Code Section III requirements are met for non-destructive examination of pressure boundary welds.
4.a) The components identified in Table 2.1.2-1 as ASME Code Section III retain their pressure boundary integrity at their design pressure.	A hydrostatic test will be performed on the components required by the ASME Code Section III to be hydrostatically tested.	A report exists and concludes that the results of the hydrostatic test of the components identified in Table 2.1.2-1 as ASME Code Section III conform with the requirements of the ASME Code Section III.
4.b) The piping identified in Table 2.1.2-2 as ASME Code Section III retains its pressure boundary integrity at its design pressure.	A hydrostatic test will be performed on the piping required by the ASME Code Section III to be hydrostatically tested.	A report exists and concludes that the results of the hydrostatic test of the piping identified in Table 2.1.2-2 as ASME Code Section III conform with the requirements of the ASME Code Section III.

Table 2.1.2-4 (cont.)
Inspections, Tests, Analyses, and Acceptance Criteria

Design Commitment	Inspections, Tests, Analyses	Acceptance Criteria
5.a) The seismic Category I equipment identified in Table 2.1.2-1 can withstand seismic design basis loads without loss of safety function.	i) Inspection will be performed to verify that the seismic Category I equipment and valves identified in Table 2.1.2-1 are located on the Nuclear Island. ii) Type tests, analyses, or a combination of type tests and analyses of seismic Category I equipment will be performed. iii) Inspection will be performed for the existence of a report verifying that the as-built equipment including anchorage is seismically bounded by the tested or analyzed conditions.	i) The seismic Category I equipment identified in Table 2.1.2-1 is located on the Nuclear Island. ii) A report exists and concludes that the seismic Category I equipment can withstand seismic design basis loads without loss of safety function. iii) A report exists and concludes that the as-built equipment including anchorage is seismically bounded by the tested or analyzed conditions.
5.b) Each of the lines identified in Table 2.1.2-2 for which functional capability is required is designed to withstand combined normal and seismic design basis loads without a loss of its functional capability.	Inspection will be performed for the existence of a report verifying that the as-built piping meets the requirements for functional capability.	A report exists and concludes that each of the as-built lines identified in Table 2.1.2-2 for which functional capability is required meets the requirements for functional capability.
6. Each of the as-built lines identified in Table 2.1.2-2 as designed for LBB meets the LBB criteria, or an evaluation is performed of the protection from the dynamic effects of a rupture of the line.	Inspection will be performed for the existence of an LBB evaluation report or an evaluation report on the protection from dynamic effects of a pipe break. Tier 1 Material, Section 3.3, Nuclear Island Buildings, contains the design descriptions and inspections, tests, analyses, and acceptance criteria for protection from the dynamic effects of pipe rupture.	An LBB evaluation report exists and concludes that the LBB acceptance criteria are met by the as-built RCS piping and piping materials, or a pipe break evaluation report exists and concludes that protection from the dynamic effects of a line break is provided.

Table 2.1.2-4 (cont.)
Inspections, Tests, Analyses, and Acceptance Criteria

Design Commitment	Inspections, Tests, Analyses	Acceptance Criteria
7.a) The Class 1E equipment identified in Table 2.1.2-1 as being qualified for a harsh environment can withstand the environmental conditions that would exist before, during, and following a design basis accident without loss of safety function for the time required to perform the safety function.	i) Type tests, analyses, or a combination of type tests and analyses will be performed on Class 1E equipment located in a harsh environment. ii) Inspection will be performed of the as-built Class 1E equipment and the associated wiring, cables, and terminations located in a harsh environment.	i) A report exists and concludes that the Class 1E equipment identified in Table 2.1.2-1 as being qualified for a harsh environment can withstand the environmental conditions that would exist before, during, and following a design basis accident without loss of safety function for the time required to perform the safety function. ii) A report exists and concludes that the as-built Class 1E equipment and the associated wiring, cables, and terminations identified in Table 2.1.2-1 as being qualified for a harsh environment are bounded by type tests, analyses, or a combination of type tests and analyses.
7.b) The Class 1E components identified in Table 2.1.2-1 are powered from their respective Class 1E division.	Testing will be performed on the RCS by providing a simulated test signal in each Class 1E division.	A simulated test signal exists at the Class 1E equipment identified in Table 2.1.2-1 when the assigned Class 1E division is provided the test signal.
7.c) Separation is provided between RCS Class 1E divisions, and between Class 1E divisions and non-Class 1E cable.	See Tier 1 Material, Table 3.3-6, item 7.d.	See Tier 1 Material, Table 3.3-6, item 7.d.
8.a) The pressurizer safety valves provide overpressure protection in accordance with Section III of the ASME Boiler and Pressure Vessel Code.	i) Inspections will be conducted to confirm that the value of the vendor code plate rating is greater than or equal to system relief requirements. ii) Testing and analysis in accordance with ASME Code Section III will be performed to determine set pressure.	i) The sum of the rated capacities recorded on the valve ASME Code plates of the safety valves exceeds 1,500,000 lb/hr. ii) A report exists and concludes that the safety valves set pressure is 2485 psig $\pm$ 25 psi.
8.b) The RCPs have a rotating inertia to provide RCS flow coastdown on loss of power to the pumps.	A test will be performed to determine the pump flow coastdown curve.	The pump flow coastdown will provide RCS flows greater than or equal to the flow shown in Figure 2.1.2-2, "Flow Transient for Four Cold Legs in Operation, Four Pumps Coasting Down."

Table 2.1.2-4 (cont.)
Inspections, Tests, Analyses, and Acceptance Criteria

Design Commitment	Inspections, Tests, Analyses	Acceptance Criteria
8.c) Each RCP flywheel assembly can withstand a design overspeed condition.	Shop testing of each RCP flywheel assembly will be performed at the vendor facility at overspeed conditions.	Each RCP flywheel assembly has passed an overspeed condition of no less than 125% of operating speed.
8.d) The RCS provides automatic depressurization during design basis events.	i) A low pressure flow test and associated analysis will be conducted to determine the total piping flow resistance of each ADS valve group connected to the pressurizer (i.e., ADS Stages 1-3) from the pressurizer through the outlet of the downstream ADS control valves. The reactor coolant system will be at cold conditions with the pressurizer full of water. The normal residual heat removal pumps will be used to provide injection flow into the RCS discharging through the ADS valves. Inspections and associated analysis of the piping flow paths from the discharge of the ADS valve groups connected to the pressurizer (i.e., ADS Stages 1-3) to the spargers will be conducted to verify the line routings are consistent with the line routings used for design flow resistance calculations. ii) Inspections and associated analysis of each fourth-stage ADS valve group (four valves and associated piping connected to each hot leg) will be conducted to verify the line routing is consistent with the line routing used for design flow resistance calculations.	i) The calculated ADS piping flow resistance from the pressurizer through the sparger with all valves of each ADS group open is $\leq$ 2.91E-6 ft/gpm^2. ii) The calculated flow resistance for each group of fourth-stage ADS valves and piping with all valves open is: Loop 1: $\leq 1.70 \times 10^{-7}$ ft/gpm^2 Loop 2: $\leq 1.57 \times 10^{-7}$ ft/gpm^2

Table 2.1.2-4 (cont.)
Inspections, Tests, Analyses, and Acceptance Criteria

Design Commitment	Inspections, Tests, Analyses	Acceptance Criteria
	iii) Inspections of each fourth-stage ADS valve will be conducted to determine the flow area through each valve.	iii) The flow area through each fourth-stage ADS valve is $\geq$ 67 in^2.
	iv) Type tests and analysis will be performed to determine the effective flow area through each stage 1,2,3 ADS valve.	iv) A report exists and concludes that the effective flow area through each stage 1 ADS valve $\geq$ 4.6 in^2 and each stage 2,3 ADS valve is $\geq$ 21 in^2.
	v) Inspections of the elevation of the ADS stage 4 valve discharge will be conducted.	v) The minimum elevation of the bottom inside surface of the outlet of these valves is greater than plant elevation 110 feet.
	vi) Inspections of the ADS stage 4 valve discharge will be conducted.	vi) The discharge of the ADS stage 4 valves is directed into the steam generator compartments.
	vii) Inspection of each ADS sparger will be conducted to determine the flow area through the sparger holes.	vii) The flow area through the holes in each ADS sparger is $\geq$ 274 in^2.
	viii) Inspection of the elevation of each ADS sparger will be conducted.	viii) The centerline of the connection of the sparger arms to the sparger hub is $\leq$ 11.5 feet below the IRWST overflow level.
8.e) The RCS provides emergency letdown during design basis events.	Inspections of the reactor vessel head vent valves and inlet and outlet piping will be conducted.	A report exists and concludes that the capacity of the reactor vessel head vent is sufficient to pass not less than 8.2 lbm/sec at 1250 psia in the RCS.

Table 2.1.2-4 (cont.)
Inspections, Tests, Analyses, and Acceptance Criteria

Design Commitment	Inspections, Tests, Analyses	Acceptance Criteria
9.a) The RCS provides circulation of coolant to remove heat from the core.	Testing and analysis to measure RCS flow with four reactor coolant pumps operating at no-load RCS pressure and temperature conditions will be performed. Analyses will be performed to convert the measured pre-fuel load flow to post-fuel load flow with 10-percent steam generator tube plugging.	The calculated post-fuel load RCS flow rate is ≥ 301,670 gpm.
9.b) The RCS provides the means to control system pressure.	i) Inspections will be performed to verify the rated capacity of pressurizer heater backup groups A and B. ii) Tests will be performed to verify that the pressurizer spray valves can open and close when operated from the MCR.	i) Pressurizer heater backup groups A and B each has a rated capacity of at least 168 kW. ii) Controls in the MCR operate to cause the pressurizer spray valves to open and close.
9.c) The pressurizer heaters trip after a signal is generated by the PMS.	Testing will be performed to confirm trip of the pressurizer heaters identified in Table 2.1.2-3.	The pressurizer heaters identified in Table 2.1.2-3 trip after a signal is generated by the PMS.
10. Safety-related displays identified in Table 2.1.2-1 can be retrieved in the MCR.	Inspection will be performed for retrievability of the safety-related displays in the MCR.	Safety-related displays identified in Table 2.1.2-1 can be retrieved in the MCR.
11.a) Controls exist in the MCR to cause the remotely operated valves identified in Table 2.1.2-1 to perform active functions.	i) Testing will be performed on the squib valves identified in Table 2.1.2-1 using controls in the MCR without stroking the valve. ii) Stroke testing will be performed on the other remotely operated valves listed in Table 2.1.2-1 using controls in the MCR.	i) Controls in the MCR operate to cause a signal at the squib valve electrical leads which is capable of actuating the squib valve. ii) Controls in the MCR operate to cause the remotely operated valves (other than squib valves) to perform active functions.

Table 2.1.2-4 (cont.)
Inspections, Tests, Analyses, and Acceptance Criteria

Design Commitment	Inspections, Tests, Analyses	Acceptance Criteria
11.b) The valves identified in Table 2.1.2-1 as having PMS control perform an active safety function after receiving a signal from the PMS.	i) Testing will be performed on the squib valves identified in Table 2.1.2-1 using real or simulated signals into the PMS without stroking the valve. ii) Testing will be performed on the other remotely operated valves identified in Table 2.1.2-1 using real or simulated signals into the PMS. iii) Testing will be performed to demonstrate that remotely operated RCS valves RCS-V001A/B, V002A/B, V003A/B, V011A/B, V012A/B, V013A/B open within the required response times.	i) The squib valves receive a signal at the valve electrical leads that is capable of actuating the squib valve. ii) The other remotely operated valves identified in Table 2.1.2-1 as having PMS control perform the active function identified in the table after receiving a signal from PMS. iii) These valves open within the following times after receipt of an actuation signal: V001A/B $\leq$ 40 sec V002A/B, V003A/B $\leq$ 100 sec V011A/B $\leq$ 30 sec V012A/B, V013A/B $\leq$ 60 sec
11.c) The valves identified in Table 2.1.2-1 as having DAS control perform an active safety function after receiving a signal from DAS.	i) Testing will be performed on the squib valves identified in Table 2.1.2-1 using real or simulated signals into the DAS without stroking the valve. ii) Testing will be performed on the other remotely operated valves identified in Table 2.1.2-1 using real or simulated signals into the DAS.	i) The squib valves receive a signal at the valve electrical leads that is capable of actuating the squib valve. ii) The other remotely operated valves identified in Table 2.1.2-1 as having DAS control perform the active function identified in the table after receiving a signal from DAS.

Table 2.1.2-4 (cont.)
Inspections, Tests, Analyses, and Acceptance Criteria

Design Commitment	Inspections, Tests, Analyses	Acceptance Criteria
12.a) The automatic depressurization valves identified in Table 2.1.2-1 perform an active safety-related function to change position as indicated in the table.	i) Tests or type tests of motor-operated valves will be performed that demonstrate the capability of the valve to operate under its design conditions.	i) A test report exists and concludes that each motor-operated valve changes position as indicated in Table 2.1.2-1 under design conditions.
	ii) Inspection will be performed for the existence of a report verifying that the as-built motor-operated valves are bounded by the tests or type tests.	ii) A report exists and concludes that the as-built motor-operated valves are bounded by the tests or type tests.
	iii) Tests of the motor-operated valves will be performed under pre-operational flow, differential pressure and temperature conditions.	iii) Each motor-operated valve changes position as indicated in Table 2.1.2-1 under pre-operational test conditions.
	iv) Tests or type tests of squib valves will be performed that demonstrate the capability of the valve to operate under its design conditions.	iv) A test report exists and concludes that each squib valve changes position as indicated in Table 2.1.2-1 under design conditions.
	v) Inspection will be performed for the existence of a report verifying that the as-built squib valves are bounded by the tests or type tests.	v) A report exists and concludes that the as-built squib valves are bounded by the tests or type tests.
	vi) See item 8.d.i in this table.	vi) See item 8.d.i in this table. The ADS stage 1-3 valve flow resistances are verified to be consistent with the ADS stage 1-3 path flow resistances.
	vii) See item 8.d.ii in this table.	vii) See item 8.d.ii in this table. The ADS stage 4 valve flow resistances are verified to be consistent with the ADS stage 4 path flow resistances.
	viii) See item 8.d.iii in this table.	viii) See item 8.d.iii in this table.
	ix) See item 8.d.iv in this table.	ix) See item 8.d.iv in this table.

Table 2.1.2-4 (cont.)
Inspections, Tests, Analyses, and Acceptance Criteria

Design Commitment	Inspections, Tests, Analyses	Acceptance Criteria
12.b) After loss of motive power, the remotely operated valves identified in Table 2.1.2-1 assume the indicated loss of motive power position.	Testing of the remotely operated valves will be performed under the conditions of loss of motive power.	Upon loss of motive power, each remotely operated valve identified in Table 2.1.2-1 assumes the indicated loss of motive power position.
13.a) Controls exist in the MCR to trip the RCPs.	Testing will be performed on the RCPs using controls in the MCR.	Controls in the MCR operate to trip the RCPs.
13.b) The RCPs trip after receiving a signal from the PMS.	Testing will be performed using real or simulated signals into the PMS.	The RCPs trip after receiving a signal from the PMS.
13.c) The RCPs trip after receiving a signal from the DAS.	Testing will be performed using real or simulated signals into the DAS.	The RCPs trip after receiving a signal from the DAS.
14. Controls exist in the MCR to cause the components identified in Table 2.1.2-3 to perform the listed function.	Testing will be performed on the components in Table 2.1.2-3 using controls in the MCR.	Controls in the MCR operate to cause the components listed in Table 2.1.2-3 to perform the listed functions.
15. Displays of the parameters identified in Table 2.1.2-3 can be retrieved in the MCR.	Inspection will be performed for retrievability of the RCS parameters in the MCR.	The displays identified in Table 2.1.2-3 can be retrieved in the MCR.

Table 2.1.2-5

Component Name	Tag No.	Component Location
Steam Generator 1	RCS-MB-01	Containment
Steam Generator 2	RCS-MB-02	Containment
Reactor Coolant Pump 1A	RCS-MP-01A	Containment
Reactor Coolant Pump 1B	RCS-MP-01B	Containment
Reactor Coolant Pump 2A	RCS-MP-02A	Containment
Reactor Coolant Pump 2B	RCS-MP-02B	Containment
Pressurizer	RCS-MV-02	Containment
ADS Sparger A	PXS-MW-01A	Containment
ADS Sparger B	PXS-MW-01B	Containment

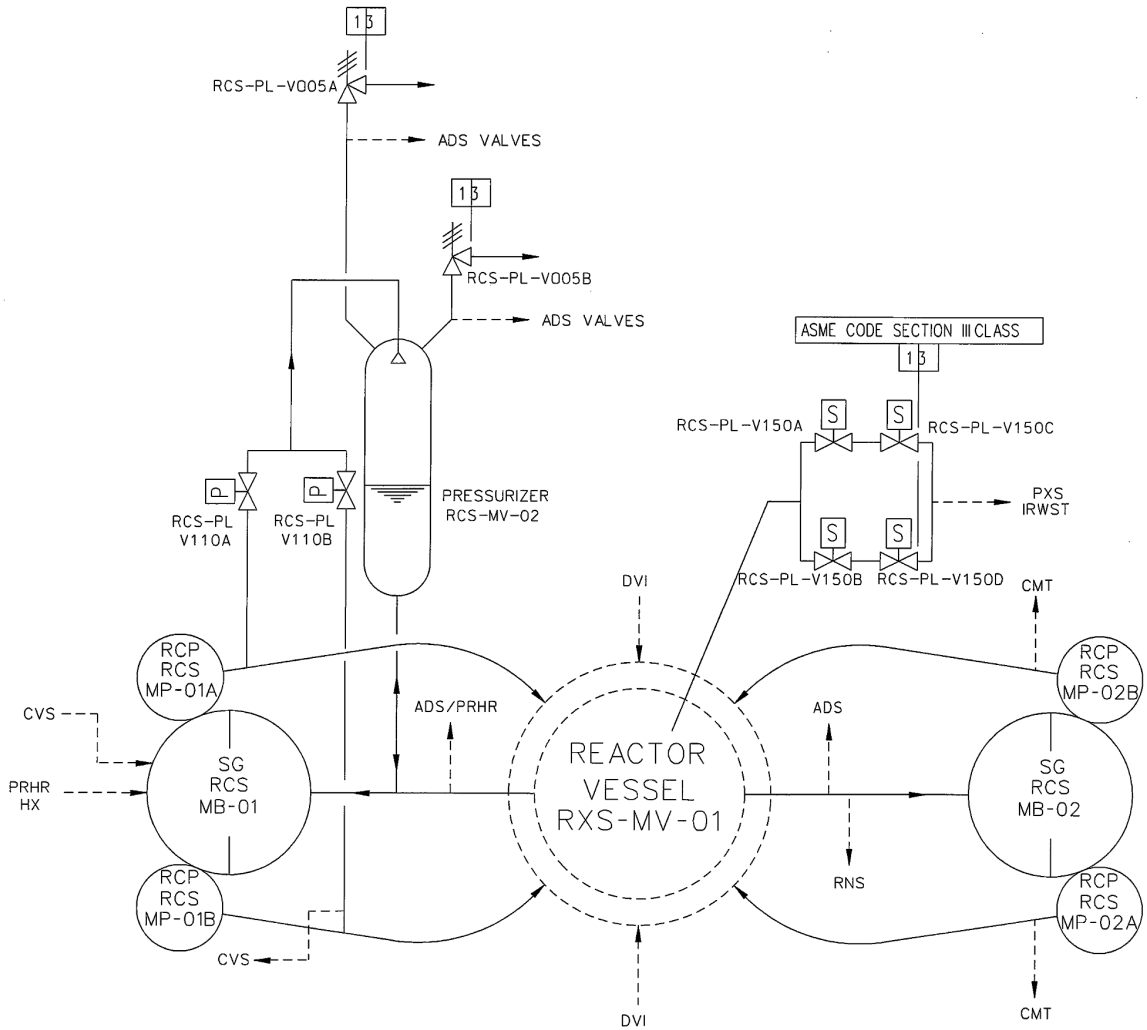

Figure 2.1.2-1 (Sheet 1 of 2)
Reactor Coolant System

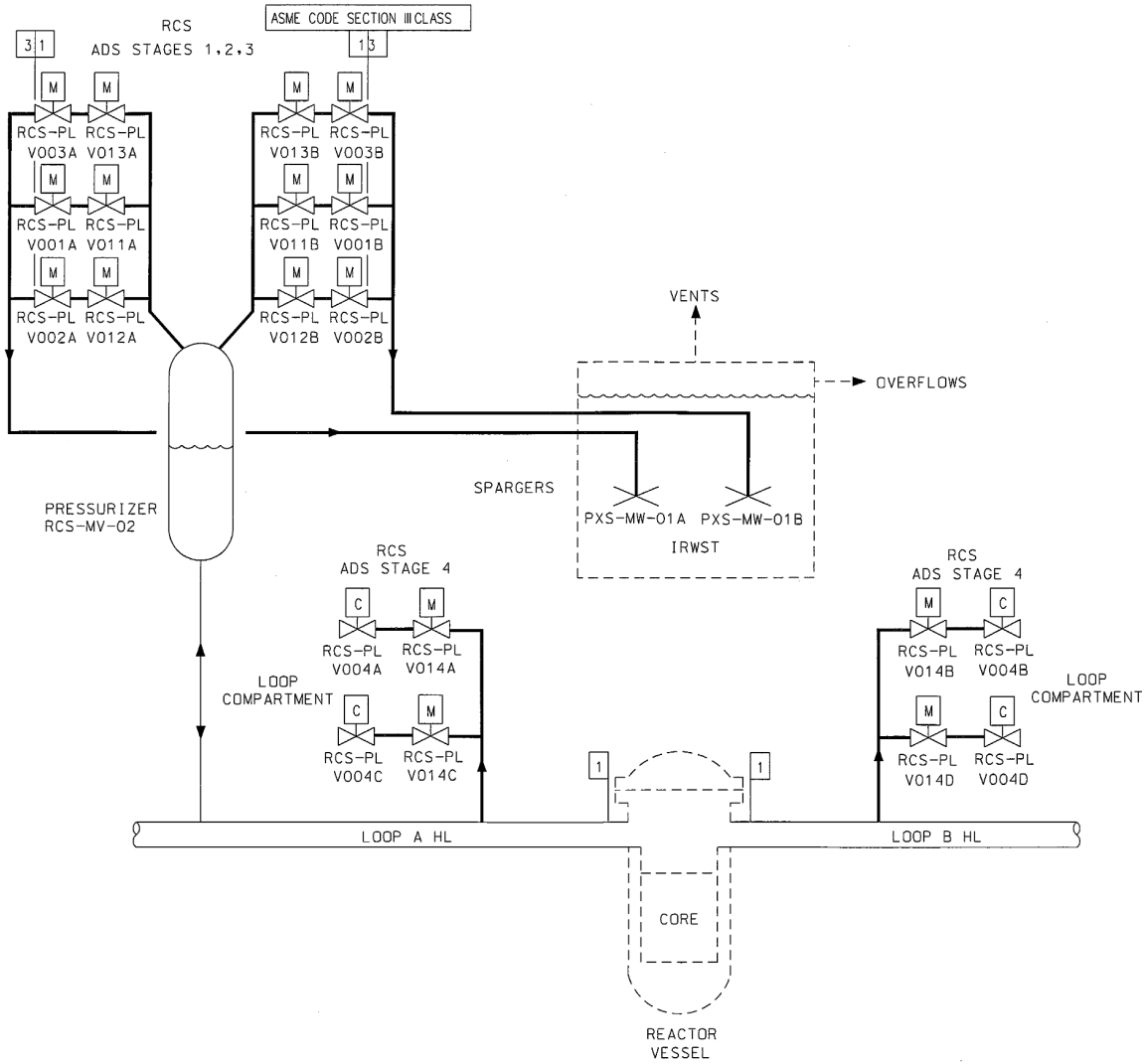

Figure 2.1.2-1 (Sheet 2 of 2)
Reactor Coolant System

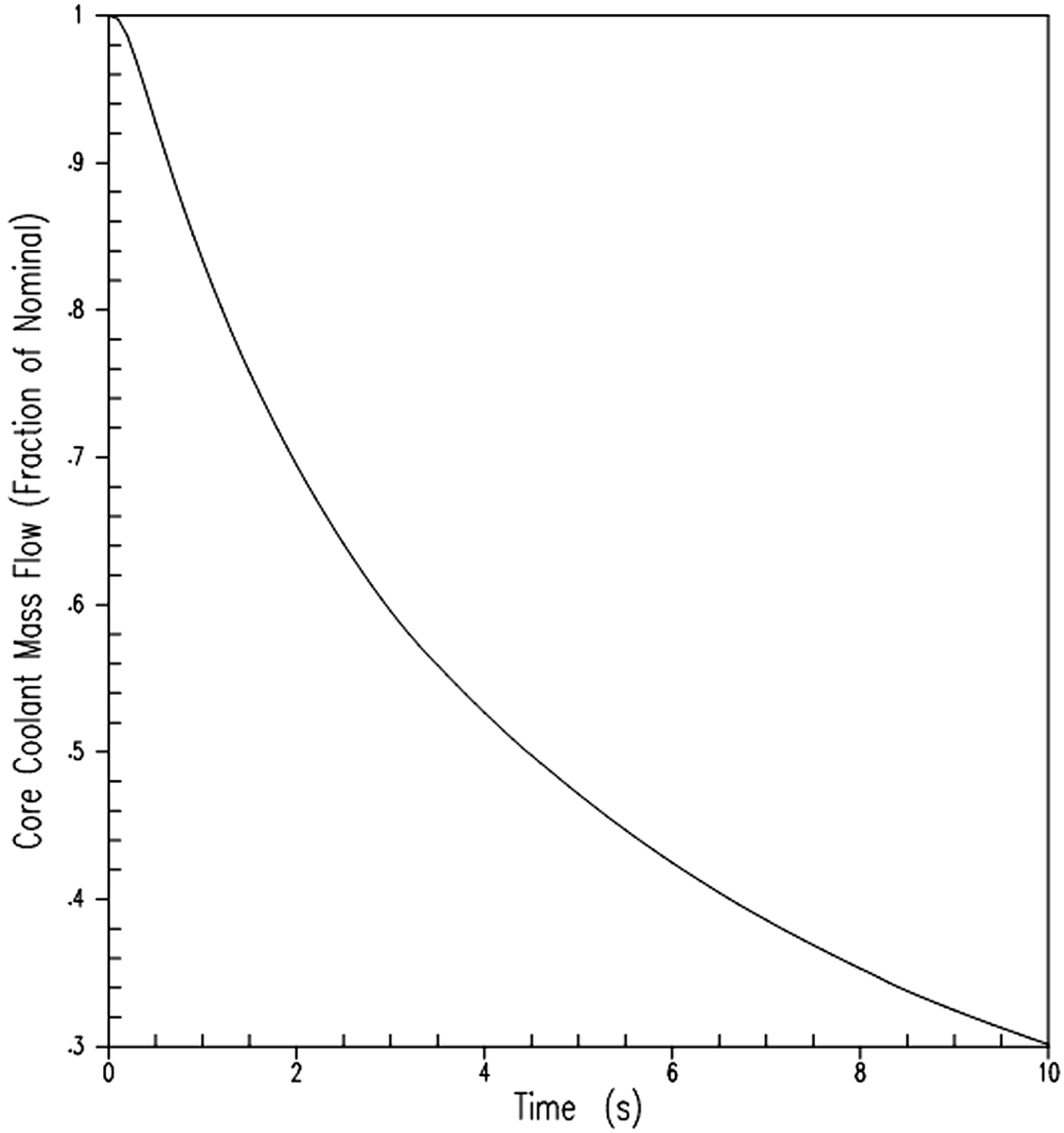

Figure 2.1.2-2
Flow Transient for Four Cold Legs
in Operation, Four Pumps Coasting Down

2.1.3 Reactor System

Design Description

The reactor system (RXS) generates heat by a controlled nuclear reaction and transfers the heat generated to the reactor coolant, provides a barrier that prevents the release of fission products to the atmosphere and a means to insert negative reactivity into the reactor core and to shutdown the reactor core.

The reactor core contains a matrix of fuel rods assembled into fuel assemblies using structural elements. Rod cluster control assemblies (RCCAs) are positioned and held within the fuel assemblies by control rod drive mechanisms (CRDMs). The CRDMs unlatch upon termination of electrical power to the CRDM thereby releasing the RCCAs. The fuel assemblies and RCCAs are designed in accordance with the principal design requirements.

The RXS is operated during normal modes of plant operation, including startup, power operation, cooldown, shutdown and refueling.

The component locations of the RXS are as shown in Table 2.1.3-3.

1. The functional arrangement of the RXS is as described in the Design Description of this Section 2.1.3.

2. a) The reactor upper internals rod guide arrangement is as shown in Figure 2.1.3-1.

   b) The rod cluster control and drive rod arrangement is as shown in Figure 2.1.3-2.

   c) The reactor vessel arrangement is as shown in Figure 2.1.3-3.

3. The components identified in Table 2.1.3-1 as ASME Code Section III are designed and constructed in accordance with ASME Code Section III requirements.

4. Pressure boundary welds in components identified in Table 2.1.3-1 as ASME Code Section III meet ASME Code Section III requirements.

5. The pressure boundary components (reactor vessel [RV], control rod drive mechanisms [CRDMs], and incore instrument QuickLoc assemblies) identified in Table 2.1.3-1 as ASME Code Section III retain their pressure boundary integrity at their design pressure.

6. The seismic Category I equipment identified in Table 2.1.3-1 can withstand seismic design basis loads without loss of safety function.

7. The reactor internals will withstand the effects of flow induced vibration.

8. The reactor vessel direct injection nozzle limits the blowdown of the reactor coolant system (RCS) following the break of a direct vessel injection line.

9. a) The Class 1E equipment identified in Table 2.1.3-1 as being qualified for a harsh environment can withstand the environmental conditions that would exist before, during, and following a design basis accident without loss of safety function for the time required to perform the safety function.

b) The Class 1E components identified in Table 2.1.3-1 are powered from their respective Class 1E division.

c) Separation is provided between RXS Class 1E divisions, and between Class 1E divisions and non-Class 1E cable.

10. The reactor lower internals assembly is equipped with holders for at least eight capsules for storing material surveillance specimens.

11. The reactor pressure vessel (RPV) beltline material has a Charpy upper-shelf energy of no less than 75 ft-lb.

12. Safety-related displays of the parameters identified in Table 2.1.3-1 can be retrieved in the main control room (MCR).

13. The fuel assemblies and rod cluster control assemblies intended for initial core load and listed in Table 2.1.3-1 have been designed and constructed in accordance with the principal design requirements.

14. A top-of-the-head visual inspection, including 360 degrees around each reactor vessel head penetration nozzle, can be performed.

Inspections, Tests, Analysis, and Acceptance Criteria

Table 2.1.3-2 specifies the inspections, tests, analysis, and associated acceptance criteria for the RXS.

Table 2.1.3-1

Equipment Name	Tag No.	ASME Code Section III Classification	Seismic Cat. I	Class 1E/ Qual. for Harsh Envir.	Safety-Related Display
RV	RXS-MV-01	Yes	Yes	-	-
Reactor Upper Internals Assembly	RXS-MI-01	Yes	Yes	-	-
Reactor Lower Internals Assembly	RXS-MI-02	Yes	Yes	-	-
Fuel Assemblies (157 locations)	RXS-FA-A07/A08/A09/B05/B06/B07/B08/ B09/B10/B11/C04/C05/C06/C07/C08/C09/C10/ C11/C12/D03/D04/D05/D06/D07/D08/D09/ D10/D11/D12/D13/E02/E03/E04/E05/E06/E07/ E08/E09/E10/E11/E12/E13/E14/F02/F03/F04/ F05/F06/F07/F08/F09/F10/F11/F12/F13/F14/ G01/G02/G03/G04/G05/G06/G07/G08/G09/ G10/G11/G12/G13/G14/G15/H01/H02/H03/ H04/H05/H06/H07/H08/H09/H10/H11/H12/ H13/H14/H15/J01/J02/J03/J04/J05/J06/J07/J08/ J09/J10/J11/J12/J13/J14/J15/K02/K03/K04/ K05/K06/K07/K08/K09/K10/K11/K12/K13/ K14/L02/L03/L04/L05/L06/L07/L08/L09/L10/ L11/L12/L13/L14/M03/M04/M05/M06/M07/ M08/M09/M10/M11/M12/M13/N04/N05/N06/ N07/N08/N09/N10/N11/N12/P05/P06/P07/P08/ P09/P10/P11/ R07/R08/R09	No(1)	Yes	-	-

Note: Dash (-) indicates not applicable.

1. Fuel assemblies are designed using ASME Section III as a general guide.

Table 2.1.3-1 (cont.)

Equipment Name	Tag No.	ASME Code Section III Classification	Seismic Cat. I	Class 1E/ Qual. for Harsh Envir.	Safety-Related Display
Rod Cluster Control Assemblies (RCCAs) (minimum 53 locations)	RXS-FR-B06/B10/C05/C07/C09/C11/D06/D08/D10/E03/E05/E07/E09/E11/E13/F02/F04/F12/F14/G03/G05/G07/G09/G11/G13/H04/H08/H12/J03/J05/J07/J09/J11/J13/K02/K04/K12/K14/L03/L05/L07/L09/L11/L13/M06/M08/M10/N05/N07/N09/N11/P06/P10	No(1)	Yes	-	-
Gray Rod Cluster Assemblies (GRCAs) (16 locations)	RXS-FG-B08/D04/D12/F06/F08/F10/H02/H06/H10/H14/K06/K08/K10/M04/M12/P08	No(1)	Yes	-	-
Control Rod Drive Mechanisms (CRDMs) (69 Locations)	RXS-MV-11B06/11B08/11B10/11C05/11C07/11C09/11C11/11D04/11D06/11D08/11D10/11D12/11E03/11E05/11E07/11E09/11E11/11E13/11F02/11F04/11F06/11F08/11F10/11F12/11F14/11G03/11G05/11G07/11G09/11G11/11G13/11H02/11H04/11H06/11H08/11H10/11H12/11H14/11J03/11J05/11J07/11J09/11J11/11J13/11K02/11K04/11K06/11K08/11K10/11K12/11K14/11L03/11L05/11L07/11L09/11L11/11L13/11M04/11M06/11M08/11M10/11M12/11N05/11N07/11N09/11N11/11P06/11P08/11P10	Yes	Yes	No/No	No
Incore Instrument QuickLoc Assemblies (8 Locations)	RXS-MY-Y11 through Y18	Yes	Yes	-	-

Note: Dash (-) indicates not applicable.

1. Fuel assemblies are designed using ASME Section III as a general guide.

Table 2.1.3-1 (cont.)

Equipment Name	Tag No.	ASME Code Section III Classification	Seismic Cat. I	Class 1E/ Qual. for Harsh Envir.	Safety-Related Display
Source Range Detectors (4)	RXS-JE-NE001A/NE001B/NE001C/NE001D	-	Yes	Yes/Yes	No
Intermediate Range Detectors (4)	RXS-JE-NE002A/NE002B/NE002C/NE002D	-	Yes	Yes/Yes	Yes
Power Range Detectors – Lower (4)	RXS-JE-NE003A/NE003B/NE003C/NE003D	-	Yes	Yes/Yes	No
Power Range Detectors – Upper (4)	RXS-JE-NE004A/NE004B/NE004C/NE004D	-	Yes	Yes/Yes	No

Note: Dash (-) indicates not applicable.

Table 2.1.3-2
Inspections, Tests, Analysis, and Acceptance Criteria

Design Commitment	Inspections, Tests, Analysis	Acceptance Criteria
1. The functional arrangement of the RXS is as described in the Design Description of this Section 2.1.3.	Inspection of the as-built system will be performed.	The as-built RXS conforms with the functional arrangement as described in the Design Description of this Section 2.1.3.
2.a) The reactor upper internals rod guide arrangement is as shown in Figure 2.1.3-1.	Inspection of the as-built system will be performed.	The as-built RXS will accommodate the fuel assembly and control rod drive mechanism pattern shown in Figure 2.1.3-1.
2.b) The control assemblies (rod cluster and gray rod) and drive rod arrangement is as shown in Figure 2.1.3-2.	Inspection of the as-built system will be performed.	The as-built RXS will accommodate the control assemblies (rod cluster and gray rod) and drive rod arrangement shown in Figure 2.1.3-2.
2.c) The reactor vessel arrangement is as shown in Figure 2.1.3-3.	Inspection of the as-built system will be performed.	The as-built RXS will accommodate the reactor vessel arrangement shown in Figure 2.1.3-3.
3. The components identified in Table 2.1.3-1 as ASME Code Section III are designed and constructed in accordance with ASME Code Section III requirements.	Inspection will be conducted of the as-built components as documented in the ASME design reports.	The ASME Code Section III design reports exist for the as-built components identified in Table 2.1.3-1 as ASME Code Section III.
4. Pressure boundary welds in components identified in Table 2.1.3-1 as ASME Code Section III meet ASME Code Section III requirements.	Inspection of as-built pressure boundary welds will be performed in accordance with the ASME Code Section III.	A report exists and concludes that the ASME Code Section III requirements are met for non-destructive examination of pressure boundary welds.
5. The pressure boundary components (RV, CRDMs, and incore instrument QuickLoc assemblies) identified in Table 2.1.3-1 as ASME Code Section III retain their pressure boundary integrity at their design pressure.	A hydrostatic test will be performed on the components of the RXS required by the ASME Code Section III to be hydrostatically tested.	A report exists and concludes that the results of the hydrostatic test of the pressure boundary components (RV, CRDMs, and incore instrument QuickLoc assemblies) conform with the requirements of the ASME Code Section III.

Table 2.1.3-2 (cont.)
Inspections, Tests, Analysis, and Acceptance Criteria

Design Commitment	Inspections, Tests, Analysis	Acceptance Criteria
6. The seismic Category I equipment identified in Table 2.1.3-1 can withstand seismic design basis loads without loss of safety function.	i) Inspection will be performed to verify that the seismic Category I equipment identified in Table 2.1.3-1 is located on the Nuclear Island. ii) Type tests, analyses, or a combination of type tests and analyses of seismic Category I equipment will be performed. iii) Inspection will be performed for the existence of a report verifying that the as-built equipment including anchorage is seismically bounded by the tested or analyzed conditions.	i) The seismic Category I equipment identified in Table 2.1.3-1 is located on the Nuclear Island. ii) A report exists and concludes that the seismic Category I equipment can withstand seismic design basis loads without loss of safety function. iii) A report exists and concludes that the as-built equipment including anchorage is seismically bounded by the tested or analyzed conditions.
7. The reactor internals will withstand the effects of flow induced vibration.	i) A vibration type test will be conducted on the (first unit) reactor internals representative of AP1000. ii) A pre-test inspection, a flow test and a post-test inspection will be conducted on the as-built reactor internals.	i) A report exists and concludes that the (first unit) reactor internals have no observable damage or loose parts as a result of the vibration type test. ii) The as-built reactor internals have no observable damage or loose parts.
8. The reactor vessel direct vessel injection nozzle limits the blowdown of the RCS following the break of a direct vessel injection line.	An inspection will be conducted to verify the flow area of the flow limiting venturi within each direct vessel injection nozzle.	The throat area of the direct vessel injection line nozzle flow limiting venturi is less than or equal to 12.57 in^2.

Table 2.1.3-2 (cont.)
Inspections, Tests, Analysis, and Acceptance Criteria

Design Commitment	Inspections, Tests, Analysis	Acceptance Criteria
9.a) The Class 1E equipment identified in Table 2.1.3-1 as being qualified for a harsh environment can withstand the environmental conditions that would exist before, during, and following a design basis accident without loss of safety function for the time required to perform the safety function.	i) Type tests, analysis, or a combination of type tests and analysis will be performed on Class 1E equipment located in a harsh environment. ii) Inspection will be performed of the as-built Class 1E equipment and the associated wiring, cables, and terminations located in a harsh environment.	i) A report exists and concludes that the Class 1E equipment identified in Table 2.1.3-1 as being qualified for a harsh environment can withstand the environmental conditions that would exist before, during, and following a design basis accident without loss of safety function for the time required to perform the safety function. ii) A report exists and concludes that the as-built Class 1E equipment and the associated wiring, cables, and terminations identified in Table 2.1.3-1 as being qualified for a harsh environment are bounded by type tests, analyses, or a combination of type tests and analyses.
9.b) The Class 1E components identified in Table 2.1.3-1 are powered from their respective Class 1E division.	Testing will be performed by providing simulated test signals in each Class 1E division.	A simulated test signal exists for Class 1E equipment identified in Table 2.1.3-1 when the assigned Class 1E division is provided the test signal.
9.c) Separation is provided between RXS Class 1E divisions, and between Class 1E divisions and non-Class 1E cable.	See Tier 1 Material, Table 3.3-6, item 7.d.	See Tier 1 Material, Table 3.3-6, item 7.d.
10. The reactor lower internals assembly is equipped with holders for at least eight capsules for storing material surveillance specimens.	Inspection of the reactor lower internals assembly for the presence of capsules will be performed.	At least eight capsules are in the reactor lower internals assembly.
11. The RPV beltline material has a Charpy upper-shelf energy of no less than 75 ft-lb.	Manufacturing tests of the Charpy V-Notch specimen of the RPV beltline material will be performed.	A report exists and concludes that the initial RPV beltline Charpy upper-shelf energy is no less than 75 ft-lb.
12. Safety-related displays of the parameters identified in Table 2.1.3-1 can be retrieved in the MCR.	Inspection will be performed for retrievability of the safety-related displays in the MCR.	Safety-related displays identified in Table 2.1.3-1 can be retrieved in the MCR.

Table 2.1.3-2 (cont.)
Inspections, Tests, Analysis, and Acceptance Criteria

Design Commitment	Inspections, Tests, Analysis	Acceptance Criteria
13. The fuel assemblies and rod cluster control assemblies intended for initial core load and listed in Table 2.1.3-1 have been designed and constructed in accordance with the established design requirements.	An analysis is performed of the reactor core design.	A report exists and concludes that the fuel assemblies and rod cluster control assemblies intended for the initial core load and listed in Table 2.1.3-1 have been designed and constructed in accordance with the principal design requirements.
14. A top-of-the-head visual inspection, including 360 degrees around each reactor vessel head penetration nozzle, can be performed.	A preservice visual examination of the reactor vessel head top surface and penetration nozzles will be performed.	A report exists that documents the results of the top-of-the-head visual inspection, including 360 degrees around each reactor vessel head penetration nozzle.

Table 2.1.3-3

Component Name	Tag No.	Component Location
RV	RXS-MV-01	Containment
Reactor Upper Internals Assembly	RXS-MI-01	Containment
Reactor Lower Internals Assembly	RXS-MI-02	Containment
Fuel Assemblies (157 locations)	RXS-FA-A07/A08/A09/B05/B06/B07/B08/B09/B10/B11/C04/C05/C06/C07/C08/C09/C10/C11/C12/D03/D04/D05/D06/D07/D08/D09/D10/D11/D12/D13/E02/E03/E04/E05/E06/E07/E08/E09/E10/E11/E12/E13/E14/F02/F03/F04/F05/F06/F07/F08/F09/F10/F11/F12/F13/F14/G01/G02/G03/G04/G05/G06/G07/G08/G09/G10/G11/G12/G13/G14/G15/H01/H02/H03/H04/H05/H06/H07/H08/H09/H10/H11/H12/H13/H14/H15/J01/J02/J03/J04/J05/J06/J07/J08/J09/J10/J11/J12/J13/J14/J15/K02/K03/K04/K05/K06/K07/K08/K09/K10/K11/K12/K13/K14/L02/L03/L04/L05/L06/L07/L08/L09/L10/L11/L12/L13/L14/M03/M04/M05/M06/M07/M08/M09/M10/M11/M12/M13/N04/N05/N06/N07/N08/N09/N10/N11/N12/P05/P06/P07/P08/P09/P10/P11/R07/R08/R09	Containment (located in auxiliary building prior to fuel loading)
Rod Cluster Control Assemblies (RCCAs) (minimum 53 locations)	RXS-FR-B06/B10/C05/C07/C09/C11/D06/D08/D10/E03/E05/E07/E09/E11/E13/F02/F04/F12/F14/G03/G05/G07/G09/G11/G13/H04/H08/H12/J03/J05/J07/J09/J11/J13/K02/K04/K12/K14/L03/L05/L07/L09/L11/L13/M06/M08/M10/N05/N07/N09/N11/P06/P10	Containment (located in auxiliary building prior to fuel loading)
Gray Rod Cluster Assemblies (GRCAs) (16 locations)	RXS-FG-B08/D04/D12/F06/F08/F10/H02/H06/H10/H14/K06/K08/K10/M04/M12/P08	Containment (located in auxiliary building prior to fuel loading)

Table 2.1.3-3 (cont.)

Component Name	Tag No.	Component Location
Control Rod Drive Mechanisms (CRDMs) (69 Locations)	RXS-MV-11B06/11B08/ 11B10/11C05/11C07/11C09/ 11C11/11D04/11D06/11D08/ 11D10/11D12/11E03/11E05/ 11E07/11E09/11E11/11E13/ 11F02/11F04/11F06/11F08/ 11F10/11F12/11F14/11G03/ 11G05/11G07/11G09/11G11/ 11G13/11H02/11H04/11H06/ 11H08/11H10/11H12/11H14/ 11J03/11J05/11J07/11J09/11J11/ 11J13/11K02/11K04/11K06/ 11K08/11K10/11K12/11K14/ 11L03/11L05/11L07/11L09/ 11L11/11L13/11M04/11M06/ 11M08/11M10/11M12/11N05/ 11N07/11N09/11N11/11P06/ 11P08/11P10	Containment
Incore Instrument QuickLoc Assemblies (8 Locations)	RXS-MY-Y11 through Y18	Containment
Source Range Detectors (4)	RXS-JE-NE001A/NE001B/ NE001C/NE001D	Containment
Intermediate Range Detectors (4)	RXS-JE-NE002A/NE002B/ NE002C/NE002D	Containment
Power Range Detectors – Lower (4)	RXS-JE-NE003A/NE003B/ NE003C/NE003D	Containment
Power Range Detectors – Upper (4)	RXS-JE-NE004A/NE004B/ NE004C/NE004D	Containment

Table 2.1.3-4
Key Dimensions and Acceptable Variations of the Reactor Vessel and Internals
(Figure 2.1.3.2 and Figure 2.1.3-3)

Description	Dimension or Elevation (inches)	Nominal Value (inches)	Acceptable Variation (inches)
RV inside diameter at beltline (inside cladding)	A	159.0	+1.0/-1.0
RV wall thickness at beltline (without cladding)	B	8.4	+1.0/-0.12
RV wall thickness at bottom head (without cladding)	C	6.0	+1.0/-0.12
RV inlet nozzle inside diameter at safe end	D	22.0	+0.35/-0.10
RV outlet nozzle inside diameter at safe end	E	31.0	+0.35/-0.10
Elevation from RV mating surface to centerline of inlet nozzle	F	62.5	+0.25/-0.25
Elevation from RV mating surface to centerline of outlet nozzle	G	80.0	+0.25/-0.25
Elevation from RV mating surface to centerline of direct vessel injection nozzle	H	100.0	+0.25/-0.25
Elevation from RV mating surface to inside of RV bottom head (inside cladding)	I	397.59	+1.0/-0.50
Elevation from RV mating surface to top of lower core support plate	J	327.3	+0.50/-0.50
Separation distance between bottom of upper core plate and top of lower core support with RV head in place	K	189.8	+0.20/0.20

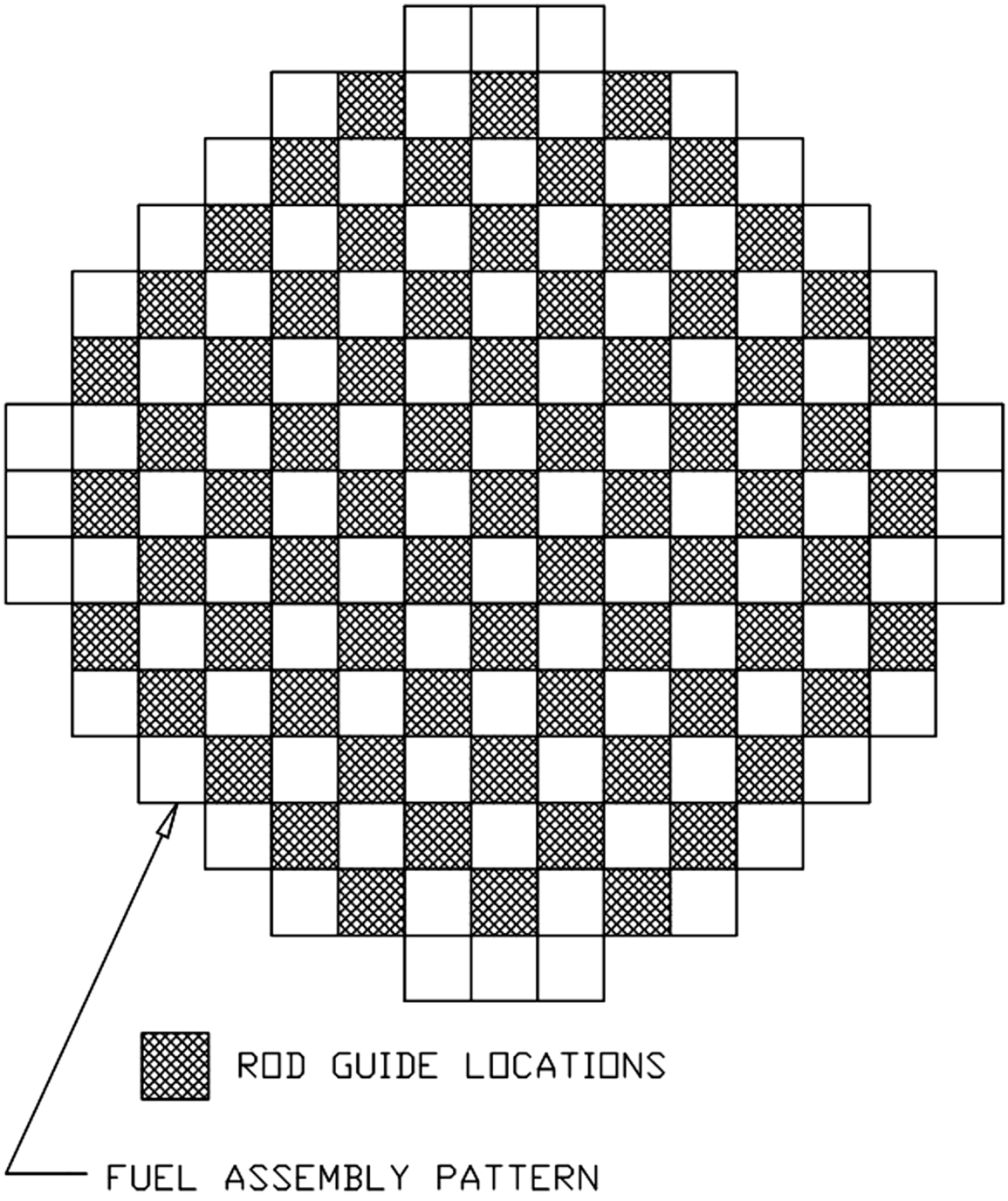

Figure 2.1.3-1
Reactor Upper Internals Rod Guide Arrangement

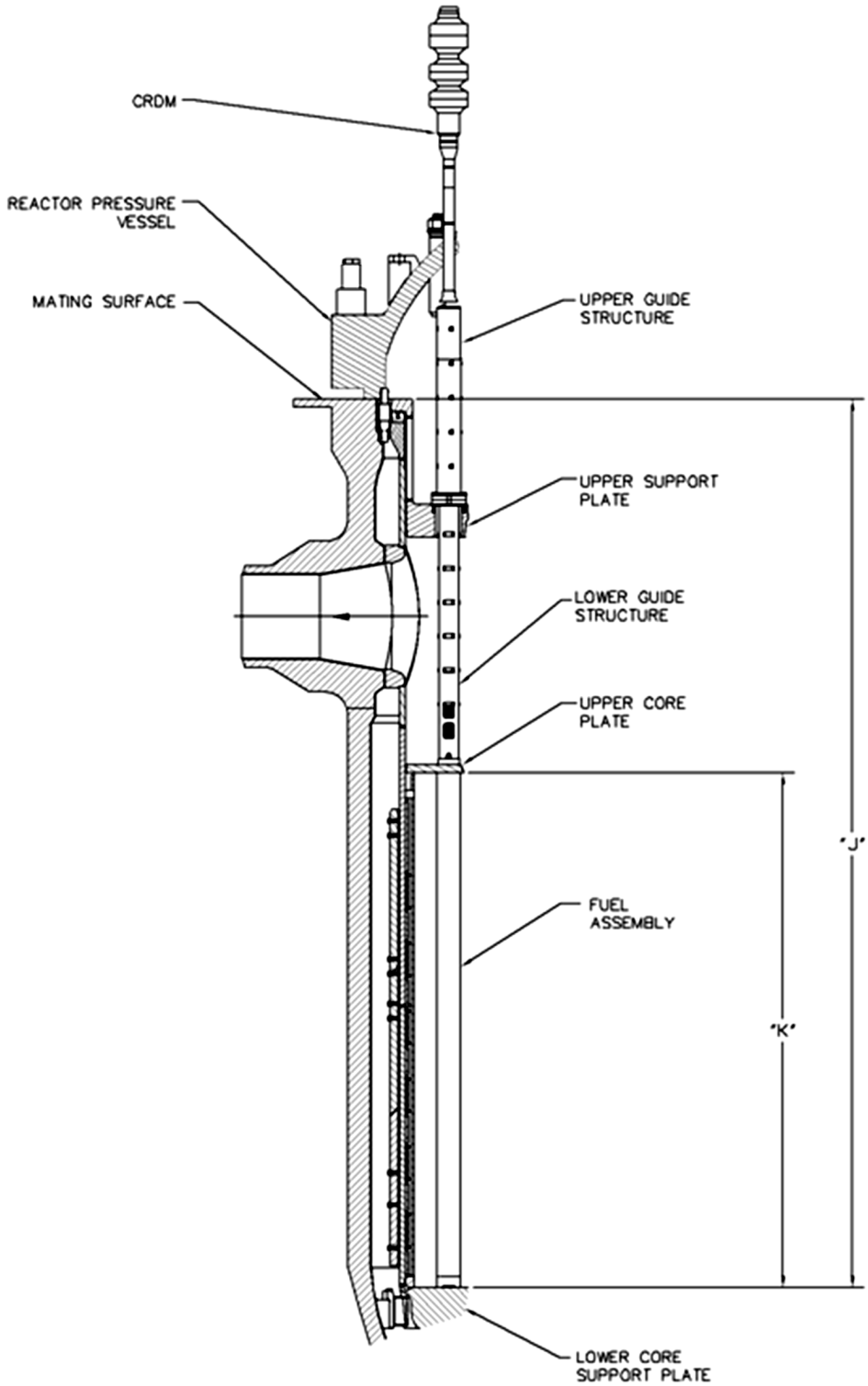

Figure 2.1.3-2
Rod Cluster Control and Drive Rod Arrangement

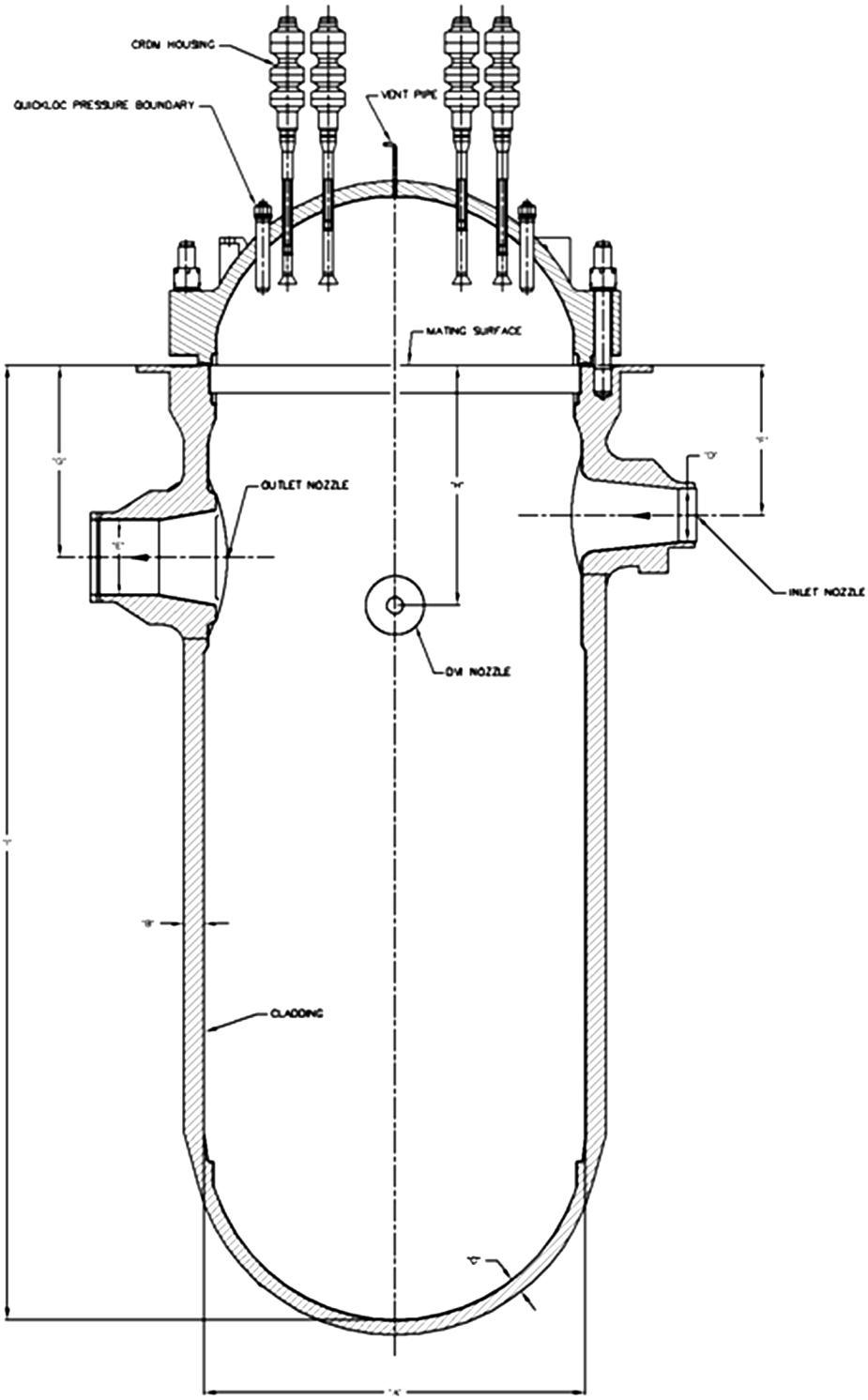

Figure 2.1.3-3
Reactor Vessel Arrangement

2.2 Nuclear Safety Systems

2.2.1 Containment System

Design Description

The containment system (CNS) is the collection of boundaries that separates the containment atmosphere from the outside environment during design basis accidents.

The CNS is as shown in Figure 2.2.1-1 and the component locations of the CNS are as shown in Table 2.2.1-4.

1. The functional arrangement of the CNS and associated systems is as described in the Design Description of this Section 2.2.1.

2. a) The components identified in Table 2.2.1-1 as ASME Code Section III are designed and constructed in accordance with ASME Code Section III requirements.

   b) The piping identified in Table 2.2.1-2 as ASME Code Section III is designed and constructed in accordance with ASME Code Section III requirements.

3. a) Pressure boundary welds in components identified in Table 2.2.1-1 as ASME Code Section III meet ASME Code Section III requirements.

   b) Pressure boundary welds in piping identified in Table 2.2.1-2 as ASME Code Section III meet ASME Code Section III requirements.

4. a) The components identified in Table 2.2.1-1 as ASME Code Section III retain their pressure boundary integrity at their design pressure.

   b) The piping identified in Table 2.2.1-2 as ASME Code Section III retains its pressure boundary integrity at its design pressure.

5. The seismic Category I equipment identified in Table 2.2.1-1 can withstand seismic design basis loads without loss of structural integrity and safety function.

6. a) The Class 1E equipment identified in Table 2.2.1-1 as being qualified for a harsh environment can withstand the environmental conditions that would exist before, during, and following a design basis accident without loss of safety function for the time required to perform the safety function.

   b) The Class 1E components identified in Table 2.2.1-1 are powered from their respective Class 1E division.

   c) Separation is provided between CNS Class 1E divisions, and between Class 1E divisions and non-Class 1E cable.

d) The non-Class 1E electrical penetrations identified in Table 2.2.1-1 as being qualified for a harsh environment can withstand the environmental conditions that would exist before, during, and following a design basis accident without loss of containment pressure boundary integrity.

7. The CNS provides the safety-related function of containment isolation for containment boundary integrity and provides a barrier against the release of fission products to the atmosphere.

8. Containment electrical penetration assemblies are protected against currents that are greater than the continuous ratings.

9. Safety-related displays identified in Table 2.2.1-1 can be retrieved in the main control room (MCR).

10. a) Controls exist in the MCR to cause those remotely operated valves identified in Table 2.2.1-1 to perform active functions.

    b) The valves identified in Table 2.2.1-1 as having protection and safety monitoring system (PMS) control perform an active function after receiving a signal from the PMS.

    c) The valves identified in Table 2.2.1-1 as having diverse actuation system (DAS) control perform an active function after receiving a signal from the DAS.

11. a) The motor-operated and check valves identified in Table 2.2.1-1 perform an active safety-related function to change position as indicated in the table.

    b) After loss of motive power, the remotely operated valves identified in Table 2.2.1-1 assume the indicated loss of motive power position.

Inspections, Tests, Analyses, and Acceptance Criteria

Table 2.2.1-3 specifies the inspections, tests, analyses, and associated acceptance criteria for the CNS.

Table 2.2.1-1

Equipment Name	Tag No.	ASME Code Section III	Seismic Cat. I	Remotely Operated Valve	Class 1E/ Qual. for Harsh Envir.	Safety-Related Display	Control PMS/DAS	Active Function	Loss of Motive Power Position
Service Air Supply Outside Containment Isolation Valve	CAS-PL-V204	Yes	Yes	No	-/-	No	-/-	None	-
Service Air Supply Inside Containment Isolation Check Valve	CAS-PL-V205	Yes	Yes	No	-/-	No	-/-	Transfer Closed	-
Instrument Air Supply Outside Containment Isolation Valve	CAS-PL-V014	Yes	Yes	Yes	Yes/No	Yes (Valve Position)	Yes/No	Transfer Closed	Closed
Instrument Air Supply Inside Containment Isolation Check Valve	CAS-PL-V015	Yes	Yes	No	-/-	-	-/-	Transfer Closed	-
Component Cooling Water System (CCS) Containment Isolation Motor-operated Valve (MOV) – Inlet Line Outside Reactor Containment (ORC)	CCS-PL-V200	Yes	Yes	Yes	Yes/No	Yes (Valve Position)	Yes/No	Transfer Closed	As Is
CCS Containment Isolation Check Valve – Inlet Line Inside Reactor Containment (IRC)	CCS-PL-V201	Yes	Yes	No	-/-	No	-/-	Transfer Closed	-

Note: Dash (-) indicates not applicable.

Table 2.2.1-1 (cont.)

Equipment Name	Tag No.	ASME Code Section III	Seismic Cat. I	Remotely Operated Valve	Class 1E/ Qual. for Harsh Envir.	Safety-Related Display	Control PMS/DAS	Active Function	Loss of Motive Power Position
CCS Containment Isolation MOV – Outlet Line IRC	CCS-PL-V207	Yes	Yes	Yes	Yes/Yes	Yes (Valve Position)	Yes/No	Transfer Closed	As Is
CCS Containment Isolation MOV – Outlet Line ORC	CCS-PL-V208	Yes	Yes	Yes	Yes/No	Yes (Valve Position)	Yes/No	Transfer Closed	As Is
CCS Containment Isolation Relief Valve – Outlet Line IRC	CCS-PL-220	Yes	Yes	No	-/-	No	-/-	Transfer Closed/ Transfer Open	-
Demineralized Water Supply Containment Isolation Valve ORC	DWS-PL-V244	Yes	Yes	No	-/-	No	-/-	None	-
Demineralized Water Supply Containment Isolation Check Valve IRC	DWS-PL-V245	Yes	Yes	No	-/-	No	-/-	Transfer Closed	-
Fuel Transfer Tube	FHS-FT-001	Yes	Yes	-	-/-	-	-/-	-	-
Fuel Transfer Tube Isolation Valve	FHS-PL-V001	Yes	Yes	-	-/-	-	-/-	Transfer Closed	-
Fire Water Containment Supply Isolation Valve – Outside	FPS-PL-V050	Yes	Yes	No	-/-	No	-/-	None	-
Fire Water Containment Isolation Supply Check Valve – Inside	FPS-PL-V052	Yes	Yes	No	-/-	No	-/-	Transfer Closed	-

Note: Dash (-) indicates not applicable.

Table 2.2.1-1 (cont.)

Equipment Name	Tag No.	ASME Code Section III	Seismic Cat. I	Remotely Operated Valve	Class 1E/ Qual. for Harsh Envir.	Safety-Related Display	Control PMS/DAS	Active Function	Loss of Motive Power Position
Spent Fuel Pool Cooling System (SFS) Discharge Line Containment Isolation Check Valve – IRC	SFS-PL-V037	Yes	Yes	No	-/-	No	-/-	Transfer Closed	-
SFS Discharge Line Containment Isolation MOV – ORC	SFS-PL-V038	Yes	Yes	Yes	Yes/No	Yes (Valve Position)	Yes/No	Transfer Closed	As Is
SFS Suction Line Containment Isolation MOV – IRC	SFS-PL-V034	Yes	Yes	Yes	Yes/Yes	Yes (Valve Position)	Yes/No	Transfer Closed	As Is
SFS Suction Line Containment Isolation MOV – ORC	SFS-PL-V035	Yes	Yes	Yes	Yes/No	Yes (Valve Position)	Yes/No	Transfer Closed	As Is
SFS Suction Line Containment Isolation Relief Valve – IRC	SFS-PL-V067	Yes	Yes	No	-/-	No	-/-	Transfer Closed/ Transfer Open	-
Containment Purge Inlet Containment Isolation Valve – ORC	VFS-PL-V003	Yes	Yes	Yes	Yes/No	Yes (Valve Position)	Yes/Yes	Transfer Closed	Closed
Containment Purge Inlet Containment Isolation Valve – IRC	VFS-PL-V004	Yes	Yes	Yes	Yes/Yes	Yes (Valve Position)	Yes/Yes	Transfer Closed	Closed

Note: Dash (-) indicates not applicable.

Table 2.2.1-1 (cont.)

Equipment Name	Tag No.	ASME Code Section III	Seismic Cat. I	Remotely Operated Valve	Class 1E/ Qual. for Harsh Envir.	Safety-Related Display	Control PMS/DAS	Active Function	Loss of Motive Power Position
Integrated Leak Rate Testing Vent Discharge Containment Isolation Valve – ORC	VFS-PL-V008	Yes	Yes	No	-/-	No	-/-	None	-
Containment Purge Discharge Containment Isolation Valve – IRC	VFS-PL-V009	Yes	Yes	Yes	Yes/Yes	Yes (Valve Position)	Yes/Yes	Transfer Closed	Closed
Containment Purge Discharge Containment Isolation Valve – ORC	VFS-PL-V010	Yes	Yes	Yes	Yes/No	Yes (Valve Position)	Yes/Yes	Transfer Closed	Closed
Vacuum Relief Containment Isolation A – ORC	VFS-PL-V800A	Yes	Yes	Yes	Yes/No	Yes (Valve Position)	Yes/No	Transfer Closed/ Transfer Open	As Is
Vacuum Relief Containment Isolation B – ORC	VFS-PL-V800B	Yes	Yes	Yes	Yes/No	Yes (Valve Position)	Yes/No	Transfer Closed/ Transfer Open	As Is
Vacuum Relief Containment Isolation Check Valve A – IRC	VFS-PL-V803A	Yes	Yes	No	-/-	No	-/-	Transfer Closed/ Transfer Open	-
Vacuum Relief Containment Isolation Check Valve B – IRC	VFS-PL-V803B	Yes	Yes	No	-/-	No	-/-	Transfer Closed/ Transfer Open	-

Note: Dash (-) indicates not applicable.

Table 2.2.1-1 (cont.)

Equipment Name	Tag No.	ASME Code Section III	Seismic Cat. I	Remotely Operated Valve	Class 1E/ Qual. for Harsh Envir.	Safety-Related Display	Control PMS/DAS	Active Function	Loss of Motive Power Position
Fan Coolers Return Containment Isolation Valve – IRC	VWS-PL-V082	Yes	Yes	Yes	Yes/Yes	Yes (Valve Position)	Yes/No	Transfer Closed	Closed
Fan Coolers Return Containment Isolation Valve – ORC	VWS-PL-V086	Yes	Yes	Yes	Yes/No	Yes (Valve Position)	Yes/No	Transfer Closed	Closed
Fan Coolers Return Containment Isolation Relief Valve – IRC	VWS-PL-V080	Yes	Yes	No	-/-	No	-/-	Transfer Closed/ Transfer Open	-
Fan Coolers Supply Containment Isolation Valve – ORC	VWS-PL-V058	Yes	Yes	Yes	Yes/No	Yes (Valve Position)	Yes/No	Transfer Closed	Closed
Fan Coolers Supply Containment Isolation Check Valve – IRC	VWS-PL-V062	Yes	Yes	No	-/-	No	-/-	Transfer Closed	-
Reactor Coolant Drain Tank (RCDT) Gas Outlet Containment Isolation Valve – IRC	WLS-PL-V067	Yes	Yes	Yes	Yes/Yes	Yes (Valve Position)	Yes/No	Transfer Closed	Closed
RCDT Gas Outlet Containment Isolation Valve – ORC	WLS-PL-V068	Yes	Yes	Yes	Yes/No	Yes (Valve Position)	Yes/No	Transfer Closed	Closed

Note: Dash (-) indicates not applicable.

Table 2.2.1-1 (cont.)

Equipment Name	Tag No.	ASME Code Section III	Seismic Cat. I	Remotely Operated Valve	Class 1E/ Qual. for Harsh Envir.	Safety-Related Display	Control PMS/DAS	Active Function	Loss of Motive Power Position
Sump Discharge Containment Isolation Valve – IRC	WLS-PL-V055	Yes	Yes	Yes	Yes/Yes	Yes (Valve Position)	Yes/Yes	Transfer Closed	Closed
Sump Discharge Containment Isolation Valve – ORC	WLS-PL-V057	Yes	Yes	Yes	Yes/No	Yes (Valve Position)	Yes/Yes	Transfer Closed	Closed
Sump Discharge Containment Isolation Relief Valve – IRC	WLS-PL-V058	Yes	Yes	No	-/-	No	-/-	Transfer Closed/ Transfer Open	-
Spare Penetration	CNS-PY-C01	Yes	Yes	-	-/-	-	-/-	-	-
Spare Penetration	CNS-PY-C02	Yes	Yes	-	-/-	-	-/-	-	-
Spare Penetration	CNS-PY-C03	Yes	Yes	-	-/-	-	-/-	-	-
Main Equipment Hatch	CNS-MY-Y01	Yes	Yes	-	-/-	-	-/-	-	-
Maintenance Hatch	CNS-MY-Y02	Yes	Yes	-	-/-	-	-/-	-	-
Personnel Hatch	CNS-MY-Y03	Yes	Yes	-	-/-	-	-/-	-	-
Personnel Hatch	CNS-MY-Y04	Yes	Yes	-	-/-	-	-/-	-	-
Containment Vessel	CNS-MV-01	Yes	Yes	-	-/-	-	-/-	-	-
Electrical Penetration P03	DAS-EY-P03Z	Yes	Yes	-	No/Yes	-	-/-	-	-
Electrical Penetration P01	ECS-EY-P01X	Yes	Yes	-	No/Yes	-	-/-	-	-

Note: Dash (-) indicates not applicable.

Table 2.2.1-1 (cont.)

Equipment Name	Tag No.	ASME Code Section III	Seismic Cat. I	Remotely Operated Valve	Class 1E/ Qual. for Harsh Envir.	Safety-Related Display	Control PMS/DAS	Active Function	Loss of Motive Power Position
Electrical Penetration P02	ECS-EY-P02X	Yes	Yes	-	No/Yes	-	-/-	-	-
Electrical Penetration P06	ECS-EY-P06Y	Yes	Yes	-	No/Yes	-	-/-	-	-
Electrical Penetration P09	ECS-EY-P09W	Yes	Yes	-	No/Yes	-	-/-	-	-
Electrical Penetration P10	ECS-EY-P10W	Yes	Yes	-	No/Yes	-	-/-	-	-
Electrical Penetration P11	IDSA-EY-P11Z	Yes	Yes	-	Yes/Yes	-	-/-	-	-
Electrical Penetration P12	IDSA-EY-P12Y	Yes	Yes	-	Yes/Yes	-	-/-	-	-
Electrical Penetration P13	IDSA-EY-P13Y	Yes	Yes	-	Yes/Yes	-	-/-	-	-
Electrical Penetration P14	IDSD-EY-P14Z	Yes	Yes	-	Yes/Yes	-	-/-	-	-
Electrical Penetration P15	IDSD-EY-P15Y	Yes	Yes	-	Yes/Yes	-	-/-	-	-
Electrical Penetration P16	IDSD-EY-P16Y	Yes	Yes	-	Yes/Yes	-	-/-	-	-
Electrical Penetration P18	ECS-EY-P18X	Yes	Yes	-	No/Yes	-	-/-	-	-
Electrical Penetration P21	EDS-EY-P21Z	Yes	Yes	-	No/Yes	-	-/-	-	-
Electrical Penetration P22	ECS-EY-P22X	Yes	Yes	-	No/Yes	-	-/-	-	-
Electrical Penetration P23	ECS-EY-P23X	Yes	Yes	-	No/Yes	-	-/-	-	-
Electrical Penetration P24	ECS-EY-P24	Yes	Yes	-	No/Yes	-	-/-	-	-
Electrical Penetration P25	ECS-EY-P25W	Yes	Yes	-	No/Yes	-	-/-	-	-
Electrical Penetration P26	ECS-EY-P26W	Yes	Yes	-	No/Yes	-	-/-	-	-
Electrical Penetration P27	IDSC-EY-P27Z	Yes	Yes	-	Yes/Yes	-	-/-	-	-

Note: Dash (-) indicates not applicable.

Table 2.2.1-1 (cont.)

Equipment Name	Tag No.	ASME Code Section III	Seismic Cat. I	Remotely Operated Valve	Class 1E/ Qual. for Harsh Envir.	Safety-Related Display	Control PMS/DAS	Active Function	Loss of Motive Power Position
Electrical Penetration P28	IDSC-EY-P28Y	Yes	Yes	-	Yes/Yes	-	-/-	-	-
Electrical Penetration P29	IDSC-EY-P29Y	Yes	Yes	-	Yes/Yes	-	-/-	-	-
Electrical Penetration P30	IDSB-EY-P30Z	Yes	Yes	-	Yes/Yes	-	-/-	-	-
Electrical Penetration P31	IDSB-EY-P31Y	Yes	Yes	-	Yes/Yes	-	-/-	-	-
Electrical Penetration P32	IDSB-EY-P32Y	Yes	Yes	-	Yes/Yes	-	-/-	-	-
Instrument Penetration P46	PCS-PY-C01	Yes	Yes	-	-/-	-	-/-	-	-
Instrument Penetration P47	PCS-PY-C02	Yes	Yes	-	-/-	-	-/-	-	-
Instrument Penetration P48	PCS-PY-C03	Yes	Yes	-	-/-	-	-/-	-	-
Instrument Penetration P49	PCS-PY-C04	Yes	Yes	-	-/-	-	-/-	-	-

Note: Dash (-) indicates not applicable.

Table 2.2.1-2

Line Name	Line Number	ASME Code Section III
Instrument Air In	CAS-PL-L015	Yes
Service Air In	CAS-PL-L204	Yes
Component Cooling Water Supply to Containment	CCS-PL-L201	Yes
Component Cooling Water Outlet from Containment	CCS-PL-L207	Yes
Demineralized Water In	DWS-PL-L245, L230	Yes
Fire Protection Supply to Containment	FPS-PL-L107	Yes
Spent Fuel Pool Cooling Discharge	SFS-PL-L017	Yes
Spent Fuel Pool Cooling Suction from Containment	SFS-PL-L038	Yes
Containment Purge Inlet to Containment	VFS-PL-L104, L105, L106	Yes
Containment Purge Discharge from Containment	VFS-PL-L203, L204, L205, L800, L801A/B, L803, L804, L805A/B	Yes
Fan Cooler Supply Line to Containment	VWS-PL-L032	Yes
Fan Cooler Return Line from Containment	VWS-PL-L055	Yes
RCDT Gas Out	WLS-PL-L022	Yes
Waste Sump Out	WLS-PL-L073	Yes

Table 2.2.1-3
Inspections, Tests, Analyses, and Acceptance Criteria

Design Commitment	Inspections, Tests, Analyses	Acceptance Criteria
1. The functional arrangement of the CNS and associated systems is as described in the Design Description of this Section 2.2.1.	Inspection of the as-built system will be performed.	The as-built CNS conforms with the functional arrangement as described in the Design Description of this Section 2.2.1.
2.a) The components identified in Table 2.2.1-1 as ASME Code Section III are designed and constructed in accordance with ASME Code Section III requirements.	Inspection will be conducted of the as-built components as documented in the ASME design reports.	The ASME Code Section III design reports exist for the as-built components identified in Table 2.2.1-1 as ASME Code Section III.
2.b) The piping identified in Table 2.2.1-2 as ASME Code Section III is designed and constructed in accordance with ASME Code Section III requirements.	Inspection will be conducted of the as-built piping as documented in the ASME design reports.	The ASME Code Section III design reports exist for the as-built piping identified in Table 2.2.1-2 as ASME Code Section III.
3.a) Pressure boundary welds in components identified in Table 2.2.1-1 as ASME Code Section III meet ASME Code Section III requirements.	Inspection of the as-built pressure boundary welds will be performed in accordance with the ASME Code Section III.	A report exists and concludes that the ASME Code Section III requirements are met for non-destructive examination of pressure boundary welds.
3.b) Pressure boundary welds in piping identified in Table 2.2.1-2 as ASME Code Section III meet ASME Code Section III requirements.	Inspection of the as-built pressure boundary welds will be performed in accordance with the ASME Code Section III.	A report exists and concludes that the ASME Code Section III requirements are met for non-destructive examination of pressure boundary welds.

Table 2.2.1-3 (cont.)
Inspections, Tests, Analyses, and Acceptance Criteria

Design Commitment	Inspections, Tests, Analyses	Acceptance Criteria
4.a) The components identified in Table 2.2.1-1 as ASME Code Section III retain their pressure boundary integrity at their design pressure.	i) A hydrostatic or pressure test will be performed on the components required by the ASME Code Section III to be tested.	i) A report exists and concludes that the results of the pressure test of the components identified in Table 2.2.1-1 as ASME Code Section III conform with the requirements of the ASME Code Section III.
	ii) Impact testing will be performed on the containment and pressure-retaining penetration materials in accordance with the ASME Code Section III, Subsection NE, to confirm the fracture toughness of the materials.	ii) A report exists and concludes that the containment and pressure-retaining penetration materials conform with fracture toughness requirements of the ASME Code Section III.
4.b) The piping identified in Table 2.2.1-2 as ASME Code Section III retains its pressure boundary integrity at its design pressure.	A hydrostatic or pressure test will be performed on the piping required by the ASME Code Section III to be pressure tested.	A report exists and concludes that the results of the pressure test of the piping identified in Table 2.2.1-2 as ASME Code Section III conform with the requirements of the ASME Code Section III.
5. The seismic Category I equipment identified in Table 2.2.1-1 can withstand seismic design basis loads without loss of structural integrity and safety function.	i) Inspection will be performed to verify that the seismic Category I equipment and valves identified in Table 2.2.1-1 are located on the Nuclear Island.	i) The seismic Category I equipment identified in Table 2.2.1-1 is located on the Nuclear Island.
	ii) Type tests, analyses, or a combination of type tests and analyses of seismic Category I equipment will be performed.	ii) A report exists and concludes that the seismic Category I equipment can withstand seismic design basis dynamic loads without loss of structural integrity and safety function.
	iii) Inspection will be performed for the existence of a report verifying that the as-built equipment including anchorage is seismically bounded by the tested or analyzed conditions.	iii) The as-built equipment including anchorage is seismically bounded by the tested or analyzed conditions.

Table 2.2.1-3 (cont.)
Inspections, Tests, Analyses, and Acceptance Criteria

Design Commitment	Inspections, Tests, Analyses	Acceptance Criteria
6.a) The Class 1E equipment identified in Table 2.2.1-1 as being qualified for a harsh environment can withstand the environmental conditions that would exist before, during, and following a design basis accident without loss of safety function for the time required to perform the safety function.	i) Type tests, analyses, or a combination of type tests and analyses will be performed on Class 1E equipment located in a harsh environment. ii) Inspection will be performed of the as-built Class 1E equipment and the associated wiring, cables, and terminations located in a harsh environment.	i) A report exists and concludes that the Class 1E equipment identified in Table 2.2.1-1 as being qualified for a harsh environment can withstand the environmental conditions that would exist before, during, and following a design basis accident without loss of safety function for the time required to perform the safety function. ii) A report exists and concludes that the as-built Class 1E equipment and the associated wiring, cables, and terminations identified in Table 2.2.1-1 as being qualified for a harsh environment are bounded by type tests, analyses, or a combination of type tests and analyses.
6.b) The Class 1E components identified in Table 2.2.1-1 are powered from their respective Class 1E division.	Testing will be performed by providing a simulated test signal in each Class 1E division.	A simulated test signal exists at the Class 1E equipment identified in Table 2.2.1-1 when the assigned Class 1E division is provided the test signal.
6.c) Separation is provided between CNS Class 1E divisions, and between Class 1E divisions and non-Class 1E cable.	See Tier 1 Material, Table 3.3-6, item 7.d.	See Tier 1 Material, Table 3.3-6, item 7.d.
6.d) The non-Class 1E electrical penetrations identified in Table 2.2.1-1 as being qualified for a harsh environment can withstand the environmental conditions that would exist before, during, and following a design basis accident without loss of containment pressure boundary integrity.	i) Type tests, analyses, or a combination of type tests and analyses will be performed on non-Class 1E electrical penetrations located in a harsh environment. ii) Inspection will be performed of the as-built non-Class 1E electrical penetrations located in a harsh environment.	i) A report exists and concludes that the non-Class 1E electrical penetrations identified in Table 2.2.1-1 as being qualified for a harsh environment can withstand the environmental conditions that would exist before, during, and following a design basis accident without loss of containment pressure boundary integrity. ii) A report exists and concludes that the as-built non-Class 1E electrical penetrations identified in Table 2.2.1-1 as being qualified for a harsh environment are bounded by type tests, analyses, or a combination of type tests and analyses.

Table 2.2.1-3 (cont.)
Inspections, Tests, Analyses, and Acceptance Criteria

Design Commitment	Inspections, Tests, Analyses	Acceptance Criteria
7. The CNS provides the safety-related function of containment isolation for containment boundary integrity and provides a barrier against the release of fission products to the atmosphere.	i) A containment integrated leak rate test will be performed. ii) Testing will be performed to demonstrate that remotely operated containment isolation valves close within the required response times.	i) The leakage rate from containment for the integrated leak rate test is less than L_a. ii) The containment purge isolation valves (VFS-PL-V003, -V004, -V009, and -V010) close within 20 seconds, containment vacuum relief isolation valves (VFS-PL-V800A and -V800B) close within 30 seconds, SGS valves SGS-PL-V040A/B and SGS-PL-V057A/B are covered in Tier 1 Material, subsection 2.2.4, Table 2.2.4-4 (item 11.b.ii) and all other containment isolation valves close within 60 seconds upon receipt of an actuation signal.
8. Containment electrical penetration assemblies are protected against currents that are greater than the continuous ratings.	An analysis for the as-built containment electrical penetration assemblies will be performed to demonstrate (1) that the maximum current of the circuits does not exceed the continuous rating of the containment electrical penetration assembly, or (2) that the circuits have redundant protection devices in series and that the redundant current protection devices are coordinated with the containment electrical penetration assembly's rated short circuit thermal capacity data and prevent current from exceeding the continuous current rating of the containment electrical penetration assembly.	Analysis exists for the as-built containment electrical penetration assemblies and concludes that the penetrations are protected against currents which are greater than their continuous ratings.
9. Safety-related displays identified in Table 2.2.1-1 can be retrieved in the MCR.	Inspection will be performed for retrievability of the safety-related displays in the MCR.	Safety-related displays identified in Table 2.2.1-1 can be retrieved in the MCR.
10.a) Controls exist in the MCR to cause those remotely operated valves identified in Table 2.2.1-1 to perform active functions.	Stroke testing will be performed on remotely operated valves identified in Table 2.2.1-1 using the controls in the MCR.	Controls in the MCR operate to cause remotely operated valves identified in Table 2.2.1-1 to perform active safety functions.

Table 2.2.1-3 (cont.)
Inspections, Tests, Analyses, and Acceptance Criteria

Design Commitment	Inspections, Tests, Analyses	Acceptance Criteria
10.b) The valves identified in Table 2.2.1-1 as having PMS control perform an active safety function after receiving a signal from the PMS.	Testing will be performed on remotely operated valves listed in Table 2.2.1-1 using real or simulated signals into the PMS.	The remotely operated valves identified in Table 2.2.1-1 as having PMS control perform the active function identified in the table after receiving a signal from PMS.
10.c) The valves identified in Table 2.2.1-1 as having DAS control perform an active safety function after receiving a signal from DAS.	Testing will be performed on remotely operated valves listed in Table 2.2.1-1 using real or simulated signals into the DAS.	The remotely operated valves identified in Table 2.2.1-1 as having DAS control perform the active function identified in the table after receiving a signal from DAS.
11.a) The motor-operated and check valves identified in Table 2.2.1-1 perform an active safety-related function to change position as indicated in the table.	i) Tests or type tests of motor-operated valves will be performed to demonstrate the capability of each valve to operate under design conditions. ii) Inspection will be performed for the existence of a report verifying that the as-built motor-operated valves are bounded by the tests or type tests. iii) Tests of the motor-operated valves will be performed under preoperational flow, differential pressure, and temperature conditions. iv) Exercise testing of the check valves with active safety functions identified in Table 2.2.1-1 will be performed under preoperational test pressure, temperature and fluid flow conditions.	i) A test report exists and concludes that each motor-operated valve changes position as indicated in Table 2.2.1-1 under design conditions. ii) A report exists and concludes that the as-built motor-operated valves are bounded by the tests or type tests. iii) Each motor-operated valve changes position as indicated in Table 2.2.1-1 under pre-operational test conditions. iv) Each check valve changes position as indicated in Table 2.2.1-1.
11.b) After loss of motive power, the remotely operated valves identified in Table 2.2.1-1 assume the indicated loss of motive power position.	Testing of the remotely operated valves will be performed under the conditions of loss of motive power.	After loss of motive power, each remotely operated valve identified in Table 2.2.1-1 assumes the indicated loss of motive power position.

Table 2.2.1-4

Component Name	Tag. No.	Component Location
Containment Vessel	CNS-MV-01	Shield Building

[This page intentionally blank]

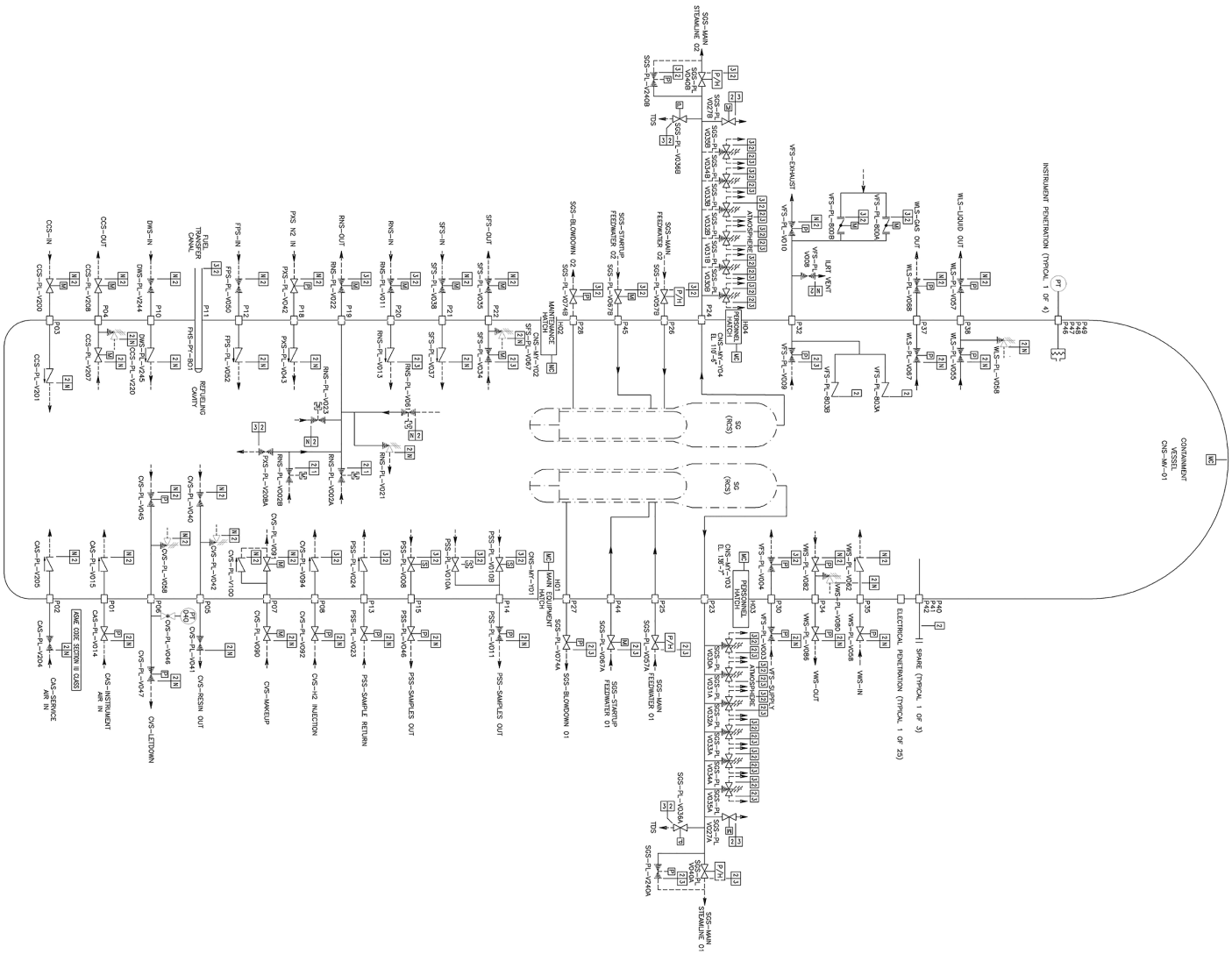

Figure 2.2.1-1
Containment System

2.2.2 Passive Containment Cooling System

Design Description

The passive containment cooling system (PCS) removes heat from the containment during design basis events.

The PCS is as shown in Figure 2.2.2-1 and the component locations of the PCS are as shown in Table 2.2.2-4.

1. The functional arrangement of the PCS is as described in the Design Description of this Section 2.2.2.

2. a) The components identified in Table 2.2.2-1 as ASME Code Section III are designed and constructed in accordance with ASME Code Section III requirements.

   b) The pipelines identified in Table 2.2.2-2 as ASME Code Section III are designed and constructed in accordance with ASME Code Section III requirements.

3. a) Pressure boundary welds in components identified in Table 2.2.2-1 as ASME Code Section III meet ASME Code Section III requirements.

   b) Pressure boundary welds in the pipelines identified in Table 2.2.2-2 as ASME Code Section III meet ASME Code Section III requirements.

4. a) The components identified in Table 2.2.2-1 as ASME Code Section III retain their pressure boundary integrity at their design pressure.

   b) The pipelines identified in Table 2.2.2-2 as ASME Code Section III retain their pressure boundary integrity at their design pressure.

5. a) The seismic Category I components identified in Table 2.2.2-1 can withstand seismic design basis loads without loss of safety function.

   b) Each of the pipelines identified in Table 2.2.2-2 for which functional capability is required is designed to withstand combined normal and seismic design basis loads without a loss of its functional capability.

   c) The passive containment cooling ancillary water storage tank (PCCAWST) can withstand a seismic event.

6. a) The Class 1E components identified in Table 2.2.2-1 as being qualified for a harsh environment can withstand the environmental conditions that would exist before, during, and following a design basis accident without loss of safety function for the time required to perform the safety function.

   b) The Class 1E components identified in Table 2.2.2-1 are powered from their respective Class 1E division.

   c) Separation is provided between PCS Class 1E divisions, and between Class 1E divisions and non-Class 1E cable.

7. The PCS performs the following safety-related functions:

   a) The PCS delivers water from the PCCWST to the outside, top of the containment vessel.

   b) The PCS wets the outside surface of the containment vessel. The inside and outside of the containment vessel above the operating deck are coated with an inorganic zinc coating.

   c) The PCS provides air flow over the outside of the containment vessel by a natural circulation air flow path from the air inlets to the air discharge structure.

   d) The PCS drains the excess water from the outside of the containment vessel through the two upper annulus drains.

   e) The PCS provides a flow path for long-term water makeup to the passive containment cooling water storage tank (PCCWST).

   f) The PCS provides a flow path for long-term water makeup from the PCCWST to the spent fuel pool.

8. The PCS performs the following nonsafety-related functions:

   a) The PCCAWST contains an inventory of cooling water sufficient for PCS containment cooling from hour 72 through day 7.

   b) The PCS delivers water from the PCCAWST to the PCCWST and spent fuel pool simultaneously.

   c) The PCCWST includes a water inventory for the fire protection system.

9. Safety-related displays identified in Table 2.2.2-1 can be retrieved in the main control room (MCR).

10. a) Controls exist in the MCR to cause the remotely operated valves identified in Table 2.2.2-1 to perform active functions.

    b) The valves identified in Table 2.2.2-1 as having protection and safety monitoring system (PMS) control perform an active safety function after receiving a signal from the PMS.

    c) The valves identified in Table 2.2.2-1 as having diverse actuation system (DAS) control perform an active safety function after receiving a signal from the DAS.

11. a) The motor-operated valves identified in Table 2.2.2-1 perform an active safety-related function to change position as indicated in the table.

    b) After loss of motive power, the remotely operated valves identified in Table 2.2.2-1 assume the indicated loss of motive power position.

Inspections, Tests, Analyses, and Acceptance Criteria

Table 2.2.2-3 specifies the inspections, tests, analyses, and associated acceptance criteria for the PCS.

Table 2.2.2-1

Component Name	Tag No.	ASME Code Section III	Seismic Cat. I	Remotely Operated Valve	Class 1E/ Qual. for Harsh Envir.	Safety-Related Display	Control PMS/ DAS	Active Function	Loss of Motive Power Position
PCCWST	PCS-MT-01	No	Yes	-	-	-	-	-	-
Water Distribution Bucket	PCS-MT-03	No	Yes	-	-	-	-	-	-
Water Distribution Wiers	PCS-MT-04	No	Yes	-	-	-	-	-	-
PCCWST Isolation Valve	PCS-PL-V001A	Yes	Yes	Yes	Yes/No	Yes (Valve Position)	Yes/Yes	Transfer Open	Open
PCCWST Isolation Valve	PCS-PL-V001B	Yes	Yes	Yes	Yes/No	Yes (Valve Position)	Yes/Yes	Transfer Open	Open
PCCWST Isolation Valve	PCS-PL-V001C	Yes	Yes	Yes	Yes/No	Yes (Valve Position)	Yes/Yes	Transfer Open	As Is
PCCWST Isolation Block MOV	PCS-PL-V002A	Yes	Yes	Yes	Yes/No	Yes (Valve Position)	Yes/No	Transfer Open	As Is
PCCWST Isolation Block MOV	PCS-PL-V002B	Yes	Yes	Yes	Yes/No	Yes (Valve Position)	Yes/No	Transfer Open	As Is
PCCWST Isolation Block MOV	PCS-PL-V002C	Yes	Yes	Yes	Yes/No	Yes (Valve Position)	Yes/No	Transfer Open	As Is
PCS Recirculation Return Isolation Valve	PCS-PL-V023	Yes	Yes	-	-/No	No	-	Transfer Close	-
PCCWST Supply to Fire Protection System Isolation Valve	PCS-PL-V005	Yes	Yes	-	-/No	No	-	Transfer Close	-

Note: Dash (-) indicates not applicable.

Table 2.2.2-1 (cont.)

Component Name	Tag No.	ASME Code Section III	Seismic Cat. I	Remotely Operated Valve	Class 1E/ Qual. for Harsh Envir.	Safety-Related Display	Control PMS/ DAS	Active Function	Loss of Motive Power Position
PCS Makeup to SFS Isolation Valve	PCS-PL-V009	Yes	Yes	-	-/No	No	-	Transfer Open/ Transfer Close	-
Water Makeup Isolation Valve	PCS-PL-V044	Yes	Yes	-	-/No	No	-	Transfer Open	-
Water Bucket Makeup Line Drain Valve	PCS-PL-V015	Yes	Yes	-	-/No	No	-	Transfer Close	-
Water Bucket Makeup Line Isolation Valve	PCS-PL-V020	Yes	Yes	-	-/No	No	-	Transfer Open	-
PCCWST Long-Term Makeup Line Check Valve	PCS-PL-V039	Yes	Yes	-	-/No	No	-	Transfer Open	-
PCCWST Long-Term Makeup Drain Isolation	PCS-PL-V042	Yes	Yes	-	-/No	No	-	Transfer Close	-
PCS Discharge to SFS Pool Isolation Valve	PCS-PL-V045	Yes	Yes	-	-/No	No	-	Transfer Open	-
Recirc Header Discharge to PCCWST Isolation Valve	PCS-PL-V046	Yes	Yes	-	-/No	No	-	Transfer Close	-
PCCWST Drain Isolation Valve	PCS-PL-V049	Yes	Yes	-	-/No	No	-	Transfer Close	-
Recirc Header Discharge to SFS Pool Isolation Valve	PCS-PL-V050	Yes	Yes	-	-/No	No	-	Transfer Open/Close	-
PCCWST Discharge to SFS Pool Isolation Valve	PCS-PL-V051	Yes	Yes	-	-/No	No	-	Transfer Open/Close	-
PCS Water Delivery Flow Sensor	PCS-001	No	Yes	-	Yes/No	Yes	-	-	-

Table 2.2.2-1 (cont.)

Component Name	Tag No.	ASME Code Section III	Seismic Cat. I	Remotely Operated Valve	Class 1E/ Qual. for Harsh Envir.	Safety-Related Display	Control PMS/ DAS	Active Function	Loss of Motive Power Position
PCS Water Delivery Flow Sensor	PCS-002	No	Yes	-	Yes/No	Yes	-	-	-
PCS Water Delivery Flow Sensor	PCS-003	No	Yes	-	Yes/No	Yes	-	-	-
PCS Water Delivery Flow Sensor	PCS-004	No	Yes	-	Yes/No	Yes	-	-	-
Containment Pressure Sensor	PCS-005	No	Yes	-	Yes/Yes	Yes	-	-	-
Containment Pressure Sensor	PCS-006	No	Yes	-	Yes/Yes	Yes	-	-	-
Containment Pressure Sensor	PCS-007	No	Yes	-	Yes/Yes	Yes	-	-	-
Containment Pressure Sensor	PCS-008	No	Yes	-	Yes/Yes	Yes	-	-	-
PCCWST Water Level Sensor	PCS-010	No	Yes	-	Yes/No	Yes	-	-	-
PCCWST Water Level Sensor	PCS-011	No	Yes	-	Yes/No	Yes	-	-	-
High-range Containment Pressure Sensor	PCS-012	No	Yes	-	Yes/Yes	Yes	-	-	-
High-range Containment Pressure Sensor	PCS-013	No	Yes	-	Yes/Yes	Yes	-	-	-
High-range Containment Pressure Sensor	PCS-014	No	Yes	-	Yes/Yes	Yes	-	-	-

Note: Dash (-) indicates not applicable.

Table 2.2.2-2

Pipeline Name	Line Number	ASME Code Section III	Functional Capability Required
PCCWST Discharge Lines	PCS-PL-L001A/B/C/D	Yes	Yes
PCCWST Discharge Cross-connect Line	PCS-PL-L002	Yes	Yes
PCCWST Discharge Header Lines	PCS-PL-L003A/B PCS-PL-L005	Yes	Yes
Post-72-hour Supply Line Connection	PCS-PL-L051 PCS-PL-L054 PCS-PL-L065	Yes	Yes
Post-72-hour Containment Cooling Makeup From Supply Line Connections	PCS-PL-L004 PCS-PL-L007 PCS-PL-L008 PCS-PL-L023 PCS-PL-L050	Yes	Yes
Post-72-hour SFS Makeup From PCCWST	PCS-PL-L011 PCS-PL-L017 PCS-PL-L018 PCS-PL-L030* PCS-PL-L073	Yes	Yes
Post-72-hour SFS Makeup From Supply Line Connection	PCS-PL-L025 PCS-PL-L029 PCS-PL-L030* PCS-PL-L048 PCS-PL-L049	Yes	Yes

Note:
* Line PCS-PL-L030 is a common makeup line from both sources.

Table 2.2.2-3
Inspections, Tests, Analyses, and Acceptance Criteria

Design Commitment	Inspections, Tests, Analyses	Acceptance Criteria
1. The functional arrangement of the PCS is as described in the Design Description of this Section 2.2.2.	Inspection of the as-built system will be performed.	The as-built PCS conforms to the functional arrangement as described in the Design Description of this Section 2.2.2.
2.a) The components identified in Table 2.2.2-1 as ASME Code Section III are designed and constructed in accordance with ASME Code Section III requirements.	Inspection will be conducted of the as-built components as documented in the ASME design reports.	The ASME Code Section III design reports exist for the as-built components identified in Table 2.2.2-1 as ASME Code Section III.
2.b) The pipelines identified in Table 2.2.2-2 as ASME Code Section III are designed and constructed in accordance with ASME Code Section III requirements.	Inspection will be conducted of the as-built piping as documented in the ASME design reports.	The ASME Code Section III design reports exist for the as-built piping identified in Table 2.2.2-2 as ASME Code Section III.
3.a) Pressure boundary welds in components identified in Table 2.2.2-1 as ASME Code Section III meet ASME Code Section III requirements.	Inspection of the as-built pressure boundary welds will be performed in accordance with the ASME Code Section III.	A report exists and concludes that the ASME Code Section III requirements are met for non-destructive examination of pressure boundary welds.
3.b) Pressure boundary welds in the pipelines identified in Table 2.2.2-2 as ASME Code Section III meet ASME Code Section III requirements.	Inspection of the as-built pressure boundary welds will be performed in accordance with the ASME Code Section III.	A report exists and concludes that the ASME Code Section III requirements are met for non-destructive examination of pressure boundary welds.
4.a) The components identified in Table 2.2.2-1 as ASME Code Section III retain their pressure boundary integrity at their design pressure.	A hydrostatic test will be performed on the components required by the ASME Code Section III to be hydrostatically tested.	A report exists and concludes that the results of the hydrostatic test of the components identified in Table 2.2.2-1 as ASME Code Section III conform with the requirements of the ASME Code Section III.

Table 2.2.2-3 (cont.)
Inspections, Tests, Analyses, and Acceptance Criteria

Design Commitment	Inspections, Tests, Analyses	Acceptance Criteria
4.b) The pipelines identified in Table 2.2.2-2 as ASME Code Section III retain their pressure boundary integrity at their design pressure.	A hydrostatic test will be performed on the piping required by the ASME Code Section III to be hydrostatically tested.	A report exists and concludes that the results of the hydrostatic test of the piping identified in Table 2.2.2-2 as ASME Code Section III conform with the requirements of the ASME Code Section III.
5.a) The seismic Category I components identified in Table 2.2.2-1 can withstand seismic design basis loads without loss of safety function.	i) Inspection will be performed to verify that the seismic Category I components and valves identified in Table 2.2.2-1 are located on the Nuclear Island. ii) Type tests, analyses, or a combination of type tests and analyses of seismic Category I components will be performed. iii) Inspection will be performed for the existence of a report verifying that the as-built components including anchorage are seismically bounded by the tested or analyzed conditions.	i) The seismic Category I components identified in Table 2.2.2-1 are located on the Nuclear Island. ii) A report exists and concludes that the seismic Category I components can withstand seismic design basis loads without loss of safety function. iii) The report exists and concludes that the as-built components including anchorage are seismically bounded by the tested or analyzed conditions.
5.b) Each of the pipelines identified in Table 2.2.2-2 for which functional capability is required is designed to withstand combined normal and seismic design basis loads without a loss of its functional capability.	Inspection will be performed for the existence of a report concluding that the as-built pipelines meet the requirements for functional capability.	A report exists and concludes that each of the as-built pipelines identified in Table 2.2.2-2 for which functional capability is required meets the requirements for functional capability.
5.c) The PCCAWST can withstand a seismic event.	Inspection will be performed for the existence of a report verifying that the as-built PCCAWST and its anchorage are designed using seismic Category II methods and criteria.	A report exists and concludes that the as-built PCCAWST and its anchorage are designed using seismic Category II methods and criteria.

Table 2.2.2-3 (cont.)
Inspections, Tests, Analyses, and Acceptance Criteria

Design Commitment	Inspections, Tests, Analyses	Acceptance Criteria
6.a) The Class 1E components identified in Table 2.2.2-1 as being qualified for a harsh environment can withstand the environmental conditions that would exist before, during, and following a design basis accident without loss of safety function for the time required to perform the safety function.	i) Type tests or a combination of type tests and analyses will be performed on Class 1E components located in a harsh environment. ii) Inspection will be performed of the as-built Class 1E components and the associated wiring, cables, and terminations located in a harsh environment.	i) A report exists and concludes that the Class 1E components identified in Table 2.2.2-1 as being qualified for a harsh environment can withstand the environmental conditions that would exist before, during, and following a design basis accident without loss of safety function for the time required to perform the safety function. ii) A report exists and concludes that the as-built Class 1E components and the associated wiring, cables, and terminations identified in Table 2.2.2-1 as being qualified for a harsh environment are bounded by type tests, analyses, or a combination of type tests and analyses.
6.b) The Class 1E components identified in Table 2.2.2-1 are powered from their respective Class 1E division.	Testing will be performed by providing a simulated test signal in each Class 1E division.	A simulated test signal exists at the Class 1E components identified in Table 2.2.2-1 when the assigned Class 1E division is provided the test signal.
6.c) Separation is provided between PCS Class 1E divisions, and between Class 1E divisions and non-Class 1E cable.	See Tier 1 Material, Table 3.3-6, item 7.d.	See Tier 1 Material, Table 3.3-6, item 7.d.

Table 2.2.2-3 (cont.)
Inspections, Tests, Analyses, and Acceptance Criteria

Design Commitment	Inspections, Tests, Analyses	Acceptance Criteria
7.a) The PCS delivers water from the PCCWST to the outside, top of the containment vessel.	i) Testing will be performed to measure the PCCWST delivery rate from each one of the three parallel flow paths.	i) When tested, each one of the three flow paths delivers water at greater than or equal to: - 469.1 gpm at a PCCWST water level of 27.4 ft + 0.2, - 0.0 ft above the tank floor - 226.6 gpm when the PCCWST water level uncovers the first (i.e. tallest) standpipe - 176.3 gpm when the PCCWST water level uncovers the second tallest standpipe - 144.2 gpm when the PCCWST water level uncovers the third tallest standpipe
	ii) Testing and or analysis will be performed to demonstrate the PCCWST inventory provides 72 hours of adequate water flow.	ii) When tested and/or analyzed with all flow paths delivering and an initial water level at 27.4 + 0.2, - 0.00 ft, the PCCWST water inventory provides greater than or equal to 72 hours of flow, and the flow rate at 72 hours is greater than or equal to 100.7 gpm.
	iii) Inspection will be performed to determine the PCCWST standpipes elevations.	iii) The elevations of the standpipes above the tank floor are: - 16.8 ft ± 0.2 ft - 20.3 ft ± 0.2 ft - 24.1 ft ± 0.2 ft

Table 2.2.2-3 (cont.)
Inspections, Tests, Analyses, and Acceptance Criteria

Design Commitment	Inspections, Tests, Analyses	Acceptance Criteria
7.b) The PCS wets the outside surface of the containment vessel. The inside and the outside of the containment vessel above the operating deck are coated with an inorganic zinc material.	i) Testing will be performed to measure the outside wetted surface of the containment vessel with one of the three parallel flow paths delivering water to the top of the containment vessel.	i) A report exists and concludes that when the water in the PCCWST uncovers the standpipes at the following levels, the water delivered by one of the three parallel flow paths to the containment shell provides coverage measured at the spring line that is equal to or greater than the stated coverages. - 24.1 ± 0.2 ft above the tank floor; at least 90% of the perimeter is wetted. - 20.3 ± 0.2 ft above the tank floor; at least 72.9% of the perimeter is wetted. - 16.8 ± 0.2 ft above the tank floor; at least 59.6% of the perimeter is wetted.
	ii) Inspection of the containment vessel exterior coating will be conducted.	ii) A report exists and concludes that the containment vessel exterior surface is coated with an inorganic zinc coating above elevation 135'-3".
	iii) Inspection of the containment vessel interior coating will be conducted.	iii) A report exists and concludes that the containment vessel interior surface is coated with an inorganic zinc coating above 7' above the operating deck.
7.c) The PCS provides air flow over the outside of the containment vessel by a natural circulation air flow path from the air inlets to the air discharge structure.	Inspections of the air flow path segments will be performed.	Flow paths exist at each of the following locations: - Air inlets - Base of the outer annulus - Base of the inner annulus - Discharge structure
7.d) The PCS drains the excess water from the outside of the containment vessel through the two upper annulus drains.	Testing will be performed to verify the upper annulus drain flow performance.	With a water level within the upper annulus 10" ± 1" above the annulus drain inlet, the flow rate through each drain is greater than or equal to 525 gpm.

Table 2.2.2-3 (cont.)
Inspections, Tests, Analyses, and Acceptance Criteria

Design Commitment	Inspections, Tests, Analyses	Acceptance Criteria
7.e) The PCS provides a flow path for long-term water makeup to the PCCWST.	i) See item 1 in this table. ii) Testing will be performed to measure the delivery rate from the long-term makeup connection to the PCCWST.	i) See item 1 in this table. ii) With a water supply connected to the PCS long-term makeup connection, each PCS recirculation pump delivers greater than or equal to 100 gpm when tested separately.
7.f) The PCS provides a flow path for long-term water makeup from the PCCWST to the spent fuel pool.	i) Testing will be performed to measure the delivery rate from the PCCWST to the spent fuel pool. ii) Inspection of the PCCWST will be performed.	i) With the PCCWST water level at 27.4 ft + 0.2, - 0.0 ft above the bottom of the tank, the flow path from the PCCWST to the spent fuel pool delivers greater than or equal to 118 gpm. ii) The volume of the PCCWST is greater than 756,700 gallons.
8.a) The PCCAWST contains an inventory of cooling water sufficient for PCS containment cooling from hour 72 through day 7.	Inspection of the PCCAWST will be performed.	The volume of the PCCAWST is greater than 780,000 gallons.
8.b) The PCS delivers water from the PCCAWST to the PCCWST and spent fuel pool simultaneously.	Testing will be performed to measure the delivery rate from the PCCAWST to the PCCWST and spent fuel pool simultaneously.	With PCCASWST aligned to the suction of the recirculation pumps, each pump delivers greater than or equal to 100 gpm to the PCCWST and 35 gpm to the spent fuel pool simultaneously when each pump is tested separately.
8.c) The PCCWST includes a water inventory for the fire protection system.	See Tier 1 Material, Table 2.3.4-2, items 1 and 2.	See Tier 1 Material, Table 2.3.4-2, items 1 and 2.
9. Safety-related displays identified in Table 2.2.2-1 can be retrieved in the MCR.	Inspection will be performed for retrievability of the safety-related displays in the MCR.	Safety-related displays identified in Table 2.2.2-1 can be retrieved in the MCR.
10.a) Controls exist in the MCR to cause the remotely operated valves identified in Table 2.2.2-1 to perform active functions.	Stroke testing will be performed on the remotely operated valves identified in Table 2.2.2-1 using the controls in the MCR.	Controls in the MCR operate to cause remotely operated valves identified in Table 2.2.2-1 to perform active functions.

Table 2.2.2-3 (cont.)
Inspections, Tests, Analyses, and Acceptance Criteria

Design Commitment	Inspections, Tests, Analyses	Acceptance Criteria
10.b) The valves identified in Table 2.2.2-1 as having PMS control perform an active safety function after receiving a signal from the PMS.	Testing will be performed on the remotely operated valves in Table 2.2.2-1 using real or simulated signals into the PMS.	The remotely operated valves identified in Table 2.2.2-1 as having PMS control perform the active function identified in the table after receiving a signal from the PMS.
10.c) The valves identified in Table 2.2.2-1 as having DAS control perform an active safety function after receiving a signal from the DAS.	Testing will be performed on the remotely operated valves listed in Table 2.2.2-1 using real or simulated signals into the DAS.	The remotely operated valves identified in Table 2.2.2-1 as having DAS control perform the active function identified in the table after receiving a signal from the DAS.
11.a) The motor-operated valves identified in Table 2.2.2-1 perform an active safety-related function to change position as indicated in the table.	i) Tests or type tests of motor-operated valves will be performed to demonstrate the capability of the valve to operate under its design conditions. ii) Inspection will be performed for the existence of a report verifying that the capability of the as-built motor-operated valves bound the tested conditions. iii) Tests of the motor-operated valves will be performed under preoperational flow, differential pressure, and temperature conditions.	i) A test report exists and concludes that each motor-operated valve changes position as indicated in Table 2.2.2-1 under design conditions. ii) A report exists and concludes that the capability of the as-built motor-operated valves bound the tested conditions. iii) Each motor-operated valve changes position as indicated in Table 2.2.2-1 under preoperational test conditions.
11.b) After loss of motive power, the remotely operated valves identified in Table 2.2.2-1 assume the indicated loss of motive power position.	Testing of the remotely operated valves will be performed under the conditions of loss of motive power.	After loss of motive power, each remotely operated valve identified in Table 2.2.2-1 assumes the indicated loss of motive power position.

Table 2.2.2-4

Component Name	Tag No.	Component Location
PCCWST	PCS-MT-01	Shield Building
PCCAWST	PCS-MT-05	Yard
Recirculation Pump A	PCS-MP-01A	Auxiliary Building
Recirculation Pump B	PCS-MP-01B	Auxiliary Building

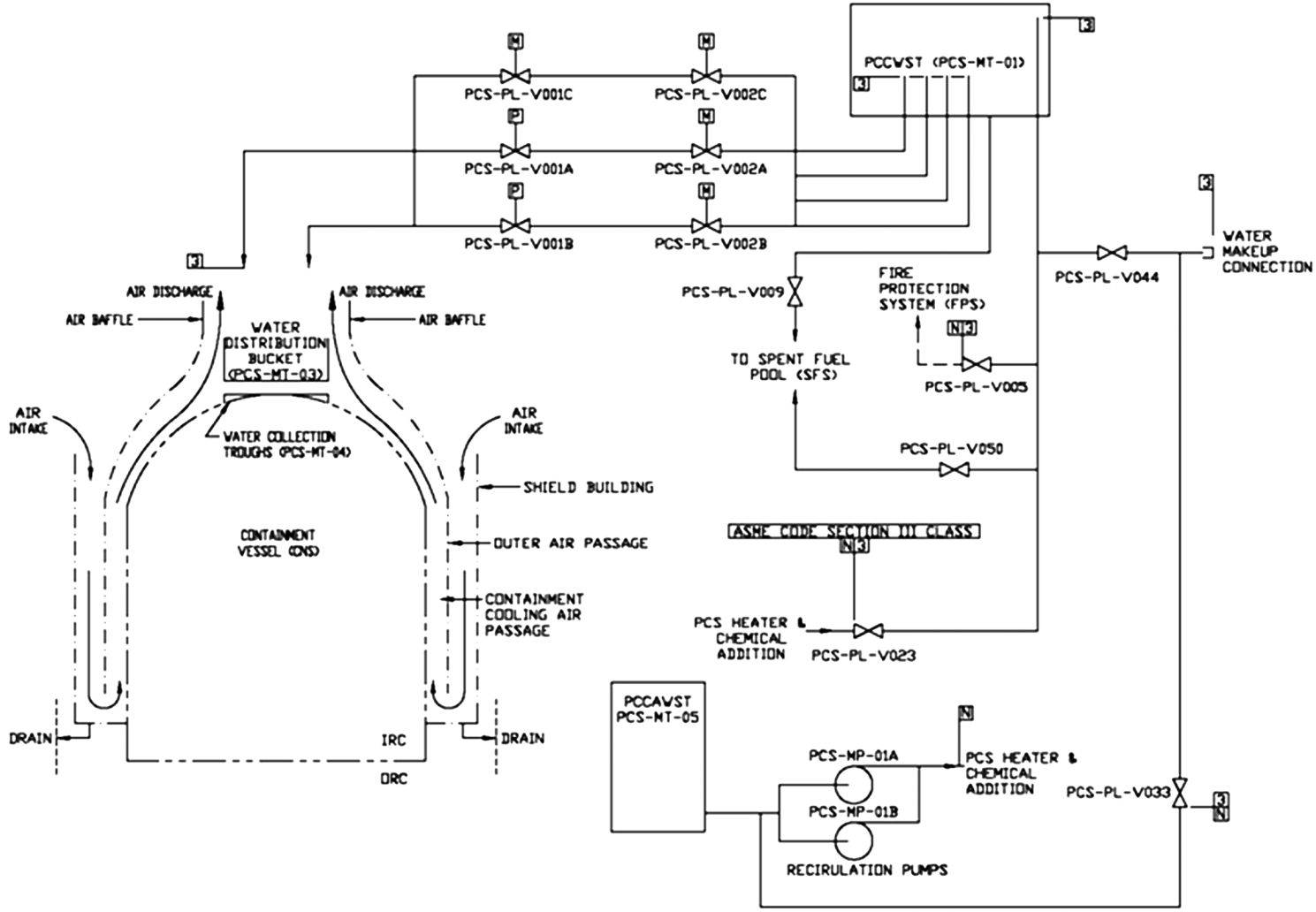

Figure 2.2.2-1
Passive Containment Cooling System

2.2.3 Passive Core Cooling System

Design Description

The passive core cooling system (PXS) provides emergency core cooling during design basis events.

The PXS is as shown in Figure 2.2.3-1 and the component locations of the PXS are as shown in Table 2.2.3-5.

1. The functional arrangement of the PXS is as described in the Design Description of this Section 2.2.3.

2. a) The components identified in Table 2.2.3-1 as ASME Code Section III are designed and constructed in accordance with ASME Code Section III requirements.

   b) The piping identified in Table 2.2.3-2 as ASME Code Section III is designed and constructed in accordance with ASME Code Section III requirements.

3. a) Pressure boundary welds in components identified in Table 2.2.3-1 as ASME Code Section III meet ASME Code Section III requirements.

   b) Pressure boundary welds in piping identified in Table 2.2.3-2 as ASME Code Section III meet ASME Code Section III requirements.

4. a) The components identified in Table 2.2.3-1 as ASME Code Section III retain their pressure boundary integrity at their design pressure.

   b) The piping identified in Table 2.2.3-2 as ASME Code Section III retains its pressure boundary integrity at its design pressure.

5. a) The seismic Category I equipment identified in Table 2.2.3-1 can withstand seismic design basis loads without loss of safety function.

   b) Each of the lines identified in Table 2.2.3-2 for which functional capability is required is designed to withstand combined normal and seismic design basis loads without a loss of its functional capability.

6. Each of the as-built lines identified in Table 2.2.3-2 as designed for leak before break (LBB) meets the LBB criteria, or an evaluation is performed of the protection from the dynamic effects of a rupture of the line.

7. a) The Class 1E equipment identified in Table 2.2.3-1 as being qualified for a harsh environment can withstand the environmental conditions that would exist before, during, and following a design basis accident without loss of safety function for the time required to perform the safety function.

   b) The Class 1E components identified in Table 2.2.3-1 are powered from their respective Class 1E division.

   c) Separation is provided between PXS Class 1E divisions, and between Class 1E divisions and non-Class 1E cable.

8. The PXS provides the following safety-related functions:

   a) The PXS provides containment isolation of the PXS lines penetrating the containment.

   b) The PRHR HX provides core decay heat removal during design basis events.

   c) The CMTs, accumulators, in-containment refueling water storage tank (IRWST) and containment recirculation provide reactor coolant system (RCS) makeup, boration, and safety injection during design basis events.

   d) The PXS provides pH adjustment of water flooding the containment following design basis accidents.

9. The PXS has the following features:

   a) The PXS provides a function to cool the outside of the reactor vessel during a severe accident.

   b) The accumulator discharge check valves (PXS-PL-V028A/B and V029A/B) are of a different check valve type than the CMT discharge check valves (PXS-PL-V016A/B and V017A/B).

   c) The equipment listed in Table 2.2.3-6 has sufficient thermal lag to withstand the effects of identified hydrogen burns associated with severe accidents.

10. Safety-related displays of the parameters identified in Table 2.2.3-1 can be retrieved in the main control room (MCR).

11. a) Controls exist in the MCR to cause the remotely operated valves identified in Table 2.2.3-1 to perform their active function(s).

    b) The valves identified in Table 2.2.3-1 as having protection and safety monitoring system (PMS) control perform their active function after receiving a signal from the PMS.

    c) The valves identified in Table 2.2.3-1 as having diverse actuation system (DAS) control perform their active function after receiving a signal from the DAS.

12. a) The squib valves and check valves identified in Table 2.2.3-1 perform an active safety-related function to change position as indicated in the table.

    b) After loss of motive power, the remotely operated valves identified in Table 2.2.3-1 assume the indicated loss of motive power position.

13. Displays of the parameters identified in Table 2.2.3-3 can be retrieved in the MCR.

Inspection, Tests, Analyses, and Acceptance Criteria

Table 2.2.3-4 specifies the inspections, tests, analyses, and associated acceptance criteria for the PXS.

Table 2.2.3-1

Equipment Name	Tag No.	ASME Code Section III	Seismic Cat. I	Remotely Operated Valve	Class 1E/ Qual. Harsh Envir.	Safety-Related Display	Control PMS/ DAS	Active Function	Loss of Motive Power Position
Passive Residual Heat Removal Heat Exchanger (PRHR HX)	PXS-ME-01	Yes	Yes	-	- / -	-	- / -	-	-
Accumulator Tank A	PXS-MT-01A	Yes	Yes	-	- / -	-	- / -	-	-
Accumulator Tank B	PXS-MT-01B	Yes	Yes	-	- / -	-	- / -	-	-
Core Makeup Tank (CMT) A	PXS-MT-02A	Yes	Yes	-	- / -	-	- / -	-	-
CMT B	PXS-MT-02B	Yes	Yes	-	- / -	-	- / -	-	-
IRWST	PXS-MT-03	No	Yes	-	- / -	-	- / -	-	-
IRWST Screen A	PXS-MY-Y01A	No	Yes	-	- / -	-	- / -	-	-
IRWST Screen B	PXS-MY-Y01B	No	Yes	-	- / -	-	- / -	-	-
IRWST Screen C	PXS-MY-Y01C	No	Yes	-	- / -	-	- / -	-	-
Containment Recirculation Screen A	PXS-MY-Y02A	No	Yes	-	- / -	-	- / -	-	-
Containment Recirculation Screen B	PXS-MY-Y02B	No	Yes	-	- / -	-	- / -	-	-
pH Adjustment Basket 3A	PXS-MY-Y03A	No	Yes	-	- / -	-	- / -	-	-
pH Adjustment Basket 3B	PXS-MY-Y03B	No	Yes	-	- / -	-	- / -	-	-
pH Adjustment Basket 4A	PXS-MY-Y04A	No	Yes		- / -		- / -		
pH Adjustment Basket 4B	PXS-MY-Y04B	No	Yes		- / -		- / -		

Note: Dash (-) indicates not applicable.

Table 2.2.3-1 (cont.)

Equipment Name	Tag No.	ASME Code Section III	Seismic Cat. I	Remotely Operated Valve	Class 1E/ Qual. Harsh Envir.	Safety-Related Display	Control PMS/ DAS	Active Function	Loss of Motive Power Position
Downspout Screen 1A	PXS-MY-Y81	No	Yes	-	- / -	-	- / -	-	-
Downspout Screen 1B	PXS-MY-Y82	No	Yes	-	- / -	-	- / -	-	-
Downspout Screen 1C	PXS-MY-Y83	No	Yes	-	- / -	-	- / -	-	-
Downspout Screen 1D	PXS-MY-Y84	No	Yes	-	- / -	-	- / -	-	-
Downspout Screen 2A	PXS-MY-Y85	No	Yes	-	- / -	-	- / -	-	-
Downspout Screen 2B	PXS-MY-Y86	No	Yes	-	- / -	-	- / -	-	-
Downspout Screen 2C	PXS-MY-Y87	No	Yes	-	- / -	-	- / -	-	-
Downspout Screen 2D	PXS-MY-Y88	No	Yes	-	- / -	-	- / -	-	-
CMT A Inlet Isolation Motor-operated Valve	PXS-PL-V002A	Yes	Yes	Yes	Yes/Yes	Yes (Position)	Yes/No	None	As Is
CMT B Inlet Isolation Motor-operated Valve	PXS-PL-V002B	Yes	Yes	Yes	Yes/Yes	Yes (Position)	Yes/No	None	As Is
CMT A Discharge Isolation Valve	PXS-PL-V014A	Yes	Yes	Yes	Yes/Yes	Yes (Position)	Yes/Yes	Transfer Open	Open
CMT B Discharge Isolation Valve	PXS-PL-V014B	Yes	Yes	Yes	Yes/Yes	Yes (Position)	Yes/Yes	Transfer Open	Open
CMT A Discharge Isolation Valve	PXS-PL-V015A	Yes	Yes	Yes	Yes/Yes	Yes (Position)	Yes/Yes	Transfer Open	Open
CMT B Discharge Isolation Valve	PXS-PL-V015B	Yes	Yes	Yes	Yes/Yes	Yes (Position)	Yes/Yes	Transfer Open	Open

Note: Dash (-) indicates not applicable.

Table 2.2.3-1 (cont.)

Equipment Name	Tag No.	ASME Code Section III	Seismic Cat. I	Remotely Operated Valve	Class 1E/ Qual. Harsh Envir.	Safety-Related Display	Control PMS/ DAS	Active Function	Loss of Motive Power Position
CMT A Discharge Check Valve	PXS-PL-V016A	Yes	Yes	No	- / -	No	- / -	Transfer Open/ Transfer Closed	-
CMT B Discharge Check Valve	PXS-PL-V016B	Yes	Yes	No	- / -	No	- / -	Transfer Open/ Transfer Closed	-
CMT A Discharge Check Valve	PXS-PL-V017A	Yes	Yes	No	- / -	No	- / -	Transfer Open/ Transfer Closed	-
CMT B Discharge Check Valve	PXS-PL-V017B	Yes	Yes	No	- / -	No	- / -	Transfer Open/ Transfer Closed	-
Accumulator A Pressure Relief Valve	PXS-PL-V022A	Yes	Yes	No	- / -	No	- / -	Transfer Open/ Transfer Closed	-
Accumulator B Pressure Relief Valve	PXS-PL-V022B	Yes	Yes	No	- / -	No	- / -	Transfer Open/ Transfer Closed	-

Note: Dash (-) indicates not applicable.

Table 2.2.3-1 (cont.)

Equipment Name	Tag No.	ASME Code Section III	Seismic Cat. I	Remotely Operated Valve	Class 1E/ Qual. Harsh Envir.	Safety-Related Display	Control PMS/ DAS	Active Function	Loss of Motive Power Position
Accumulator A Discharge Isolation Valve	PXS-PL-V027A	Yes	Yes	Yes	- / -	Yes	- /No	None	As Is
Accumulator B Discharge Isolation Valve	PXS-PL-V027B	Yes	Yes	Yes	- / -	Yes	- /No	None	As Is
Accumulator A Discharge Check Valve	PXS-PL-V028A	Yes	Yes	No	- / -	No	- / -	Transfer Open/ Close	-
Accumulator B Discharge Check Valve	PXS-PL-V028B	Yes	Yes	No	- / -	No	- / -	Transfer Open/ Close	-
Accumulator A Discharge Check Valve	PXS-PL-V029A	Yes	Yes	No	- / -	No	- / -	Transfer Open/ Close	-
Accumulator B Discharge Check Valve	PXS-PL-V029B	Yes	Yes	No	- / -	No	- / -	Transfer Open/ Close	-
Nitrogen Supply Containment Isolation Valve	PXS-PL-V042	Yes	Yes	Yes	Yes/No	Yes (position)	Yes/No	Transfer Closed	Close
Nitrogen Supply Containment Isolation Check Valve	PXS-PL-V043	Yes	Yes	No	- / -	No	- / -	Transfer Closed	-

Note: Dash (-) indicates not applicable.

Table 2.2.3-1 (cont.)

Equipment Name	Tag No.	ASME Code Section III	Seismic Cat. I	Remotely Operated Valve	Class 1E/ Qual. Harsh Envir.	Safety-Related Display	Control PMS/ DAS	Active Function	Loss of Motive Power Position
PRHR HX Inlet Isolation Motor-operated Valve	PXS-PL-V101	Yes	Yes	Yes	Yes/Yes	Yes (position)	Yes/No	None	As Is
PRHR HX Control Valve	PXS-PL-V108A	Yes	Yes	Yes	Yes/Yes	Yes (Position)	Yes/Yes	Transfer Open	Open
PRHR HX Control Valve	PXS-PL-V108B	Yes	Yes	Yes	Yes/Yes	Yes (Position)	Yes/Yes	Transfer Open	Open
Containment Recirculation A Isolation Motor-operated Valve	PXS-PL-V117A	Yes	Yes	Yes	Yes/Yes	Yes (position)	Yes/Yes	None	As Is
Containment Recirculation B Isolation Motor-operated Valve	PXS-PL-V117B	Yes	Yes	Yes	Yes/Yes	Yes (position)	Yes/Yes	None	As Is
Containment Recirculation A Squib Valve	PXS-PL-V118A	Yes	Yes	Yes	Yes/Yes	Yes (Position)	Yes/Yes	Transfer Open	As Is
Containment Recirculation B Squib Valve	PXS-PL-V118B	Yes	Yes	Yes	Yes/Yes	Yes (Position)	Yes/Yes	Transfer Open	As Is
Containment Recirculation A Check Valve	PXS-PL-V119A	Yes	Yes	No	- / -	No	- / -	Transfer Open/ Transfer Closed	-

Note: Dash (-) indicates not applicable.

Table 2.2.3-1 (cont.)

Equipment Name	Tag No.	ASME Code Section III	Seismic Cat. I	Remotely Operated Valve	Class 1E/ Qual. Harsh Envir.	Safety-Related Display	Control PMS/ DAS	Active Function	Loss of Motive Power Position
Containment Recirculation B Check Valve	PXS-PL-V119B	Yes	Yes	No	- / -	No	- / -	Transfer Open/ Transfer Closed	-
Containment Recirculation A Squib Valve	PXS-PL-V120A	Yes	Yes	Yes	Yes/Yes	Yes (Position)	Yes/Yes	Transfer Open	As Is
Containment Recirculation B Squib Valve	PXS-PL-V120B	Yes	Yes	Yes	Yes/Yes	Yes (Position)	Yes/Yes	Transfer Open	As Is
IRWST Injection A Check Valve	PXS-PL-V122A	Yes	Yes	No	- / -	No	- / -	Transfer Open/ Transfer Closed	-
IRWST Injection B Check Valve	PXS-PL-V122B	Yes	Yes	No	- / -	No	- / -	Transfer Open/ Transfer Closed	-
IRWST Injection A Squib Valve	PXS-PL-V123A	Yes	Yes	Yes	Yes/Yes	Yes (Position)	Yes/Yes	Transfer Open	As Is
IRWST Injection B Squib Valve	PXS-PL-V123B	Yes	Yes	Yes	Yes/Yes	Yes (Position)	Yes/Yes	Transfer Open	As Is

Note: Dash (-) indicates not applicable.

Table 2.2.3-1 (cont.)

Equipment Name	Tag No.	ASME Code Section III	Seismic Cat. I	Remotely Operated Valve	Class 1E/ Qual. Harsh Envir.	Safety-Related Display	Control PMS/ DAS	Active Function	Loss of Motive Power Position
IRWST Injection A Check Valve	PXS-PL-V124A	Yes	Yes	No	- / -	No	- / -	Transfer Open/ Transfer Closed	-
IRWST Injection B Check Valve	PXS-PL-V124B	Yes	Yes	No	- / -	No	- / -	Transfer Open/ Transfer Closed	-
IRWST Injection A Squib Valve	PXS-PL-V125A	Yes	Yes	Yes	Yes/Yes	Yes (Position)	Yes/Yes	Transfer Open	As Is
IRWST Injection B Squib Valve	PXS-PL-V125B	Yes	Yes	Yes	Yes/Yes	Yes (Position)	Yes/Yes	Transfer Open	As Is
IRWST Gutter Isolation Valve	PXS-PL-V130A	Yes	Yes	Yes	Yes/Yes	Yes (Position)	Yes/Yes	Transfer Closed	Closed
IRWST Gutter Isolation Valve	PXS-PL-V130B	Yes	Yes	Yes	Yes/Yes	Yes (Position)	Yes/Yes	Transfer Closed	Closed
CMT A Level Sensor	PXS-011A	-	Yes	-	Yes/Yes	Yes	- / -	-	-
CMT A Level Sensor	PXS-011B	-	Yes	-	Yes/Yes	Yes	- / -	-	-
CMT A Level Sensor	PXS-011C	-	Yes	-	Yes/Yes	Yes	- / -	-	-
CMT A Level Sensor	PXS-011D	-	Yes	-	Yes/Yes	Yes	- / -	-	-

Note: Dash (-) indicates not applicable.

Table 2.2.3-1 (cont.)

Equipment Name	Tag No.	ASME Code Section III	Seismic Cat. I	Remotely Operated Valve	Class 1E/ Qual. Harsh Envir.	Safety-Related Display	Control PMS/ DAS	Active Function	Loss of Motive Power Position
CMT B Level Sensor	PXS-012A	-	Yes	-	Yes/Yes	Yes	-/-	-	-
CMT B Level Sensor	PXS-012B	-	Yes	-	Yes/Yes	Yes	-/-	-	-
CMT B Level Sensor	PXS-012C	-	Yes	-	Yes/Yes	Yes	-/-	-	-
CMT B Level Sensor	PXS-012D	-	Yes	-	Yes/Yes	Yes	-/-	-	-
CMT A Level Sensor	PXS-013A	-	Yes	-	Yes/Yes	Yes	-/-	-	-
CMT A Level Sensor	PXS-013B	-	Yes	-	Yes/Yes	Yes	-/-	-	-
CMT A Level Sensor	PXS-013C	-	Yes	-	Yes/Yes	Yes	-/-	-	-
CMT A Level Sensor	PXS-013D	-	Yes	-	Yes/Yes	Yes	-/-	-	-
CMT B Level Sensor	PXS-014A	-	Yes	-	Yes/Yes	Yes	- / -	-	-
CMT B Level Sensor	PXS-014B	-	Yes	-	Yes/Yes	Yes	- / -	-	-
CMT B Level Sensor	PXS-014C	-	Yes	-	Yes/Yes	Yes	- / -	-	-
CMT B Level Sensor	PXS-014D	-	Yes	-	Yes/Yes	Yes	- / -	-	-
IRWST Level Sensor	PXS-045	-	Yes	-	Yes/Yes	Yes	- / -	-	-
IRWST Level Sensor	PXS-046	-	Yes	-	Yes/Yes	Yes	- / -	-	-
IRWST Level Sensor	PXS-047	-	Yes	-	Yes/Yes	Yes	- / -	-	-
IRWST Level Sensor	PXS-048	-	Yes	-	Yes/Yes	Yes	- / -	-	-
PRHR HX Flow Sensor	PXS-049A	-	Yes	-	Yes/Yes	Yes	- / -	-	-
PRHR HX Flow Sensor	PXS-049B	-	Yes	-	Yes/Yes	Yes	- / -	-	-

Note: Dash (-) indicates not applicable.

Table 2.2.3-1 (cont.)

Equipment Name	Tag No.	ASME Code Section III	Seismic Cat. I	Remotely Operated Valve	Class 1E/ Qual. Harsh Envir.	Safety-Related Display	Control PMS/ DAS	Active Function	Loss of Motive Power Position
Containment Flood-up Level Sensor	PXS-050	-	Yes	-	Yes/Yes	Yes	-/-	-	-
Containment Flood-up Level Sensor	PXS-051	-	Yes	-	Yes/Yes	Yes	-/-	-	-
Containment Flood-up Level Sensor	PXS-052	-	Yes	-	Yes/Yes	Yes	-/-	-	-
RNS Suction Leak Test Valve	PXS-PL-V208A	Yes	Yes	No	- / -	No	-/-	-	-

Note: Dash (-) indicates not applicable.

Table 2.2.3-2

Line Name	Line Number	ASME Code Section III	Leak Before Break	Functional Capability Required
PRHR HX inlet line from hot leg and outlet line to steam generator channel head	RCS-L134, PXS-L102, PXS-L103, PXS-L104A, PXS-L104B, PXS-L105, RCS-L113	Yes	Yes	Yes
	PXS-L107	Yes	Yes	No
CMT A inlet line from cold leg C and outlet line to reactor vessel direct vessel injection (DVI) nozzle A	RCS-L118A, PXS-L007A, PXS-L015A, PXS-L016A, PXS-L017A, PXS-L018A, PXS-L020A, PXS-L021A	Yes	Yes	Yes
	PXS-L019A, PXS-L070A	Yes	Yes	No
CMT B inlet line from cold leg D and outlet line to reactor vessel DVI nozzle B	RCS-L118B, PXS-L007B, PXS-L015B, PXS-L016B, PXS-L017B, PXS-L018B, PXS-L020B, PXS-L021B	Yes	Yes	Yes
	PXS-L019B, PXS-L070B	Yes	Yes	No
Accumulator A discharge line to DVI line A	PXS-L025A, PXS-L027A, PXS-L029A	Yes	Yes	Yes
Accumulator B discharge line to DVI line B	PXS-L025B, PXS-L027B, PXS-L029B	Yes	Yes	Yes
IRWST injection line A to DVI line A	PXS-L125A, PXS-L127A	Yes	Yes	Yes
	PXS-L123A, PXS-L124A, PXS-L118A, PXS-L117A, PXS-L116A, PXS-L112A	Yes	No	Yes
IRWST injection line B to DVI line B	PXS-L125B, PXS-L127B	Yes	Yes	Yes
	PXS-L123B, PXS-L124B, PXS-L118B, PXS-L117B, PXS-L116B, PXS-L114B, PXS-L112B, PXS-L120	Yes	No	Yes

Table 2.2.3-2 (cont.)

Line Name	Line Number	ASME Code Section III	Leak Before Break	Functional Capability Required
IRWST screen cross-connect line	PXS-L180A, PXS-L180B	Yes	No	Yes
Containment recirculation line A	PXS-L113A, PXS-L131A, PXS-L132A	Yes	No	Yes
Containment recirculation line B	PXS-L113B, PXS-L131B, PXS-L132B	Yes	No	Yes
IRWST gutter drain line	PXS-L142A, PXS-L142B	Yes	No	Yes
	PXS-L141A, PXS-L141B	Yes	No	No
Downspout drain lines from polar crane girder and internal stiffener to collection box A	PXS-L301A, PXS-L302A, PXS-L303A, PXS-L304A, PXS-L305A, PXS-L306A, PXS-L307A, PXS-L308A, PXS-L309A, PXS-L310A	Yes	No	Yes
Downspout drain lines from polar crane girder and internal stiffener to collection box B	PXS-L301B, PXS-L302B, PXS-L303B, PXS-L304B, PXS-L305B, PXS-L306B, PXS-L307B, PXS-L308B, PXS-L309B, PXS-L310B	Yes	No	Yes

Table 2.2.3-3

Equipment	Tag No.	Display	Control Function
CMT A Discharge Isolation Valve (Position)	PXS-PL-V014A	Yes (Position)	-
CMT B Discharge Isolation Valve (Position)	PXS-PL-V014B	Yes (Position)	-
CMT A Discharge Isolation Valve (Position)	PXS-PL-V015A	Yes (Position)	-
CMT B Discharge Isolation Valve (Position)	PXS-PL-V015B	Yes (Position)	-
Accumulator A Nitrogen Vent Valve (Position)	PXS-PL-V021A	Yes (Position)	-
Accumulator B Nitrogen Vent Valve (Position)	PXS-PL-V021B	Yes (Position)	-
Accumulator A Discharge Isolation Valve (Position)	PXS-PL-V027A	Yes (Position)	-
Accumulator B Discharge Isolation Valve (Position)	PXS-PL-V027B	Yes (Position)	-
PRHR HX Control Valve (Position)	PXS-PL-V108A	Yes (Position)	-
PRHR HX Control Valve (Position)	PXS-PL-V108B	Yes (Position)	-
Containment Recirculation A Isolation Valve	PXS-PL-V017A	Yes (Position)	-
Containment Recirculation B Isolation Valve	PXS-PL-V017B	Yes (Position)	-
Containment Recirculation A Isolation Valve (Position)	PXS-PL-V118A	Yes (Position)	-
Containment Recirculation B Isolation Valve (Position)	PXS-PL-V118B	Yes (Position)	-
Containment Recirculation A Isolation Valve (Position)	PXS-PL-V120A	Yes (Position)	-
Containment Recirculation B Isolation Valve (Position)	PXS-PL-V120B	Yes (Position)	-
IRWST Line A Isolation Valve (Position)	PXS-PL-V121A	Yes (Position)	-
IRWST Line B Isolation Valve (Position)	PXS-PL-V121B	Yes (Position)	-
IRWST Injection A Isolation Squib (Position)	PXS-PL-V123A	Yes (Position)	-

Note: Dash (-) indicates not applicable.

Table 2.2.3-3 (cont.)

Equipment	Tag No.	Display	Control Function
IRWST Injection B Isolation Squib (Position)	PXS-PL-V123B	Yes (Position)	-
IRWST Injection A Isolation Squib (Position)	PXS-PL-V125A	Yes (Position)	-
IRWST Injection B Isolation Squib (Position)	PXS-PL-V125B	Yes (Position)	-
IRWST Gutter Bypass Isolation Valve (Position)	PXS-PL-V130A	Yes (Position)	-
IRWST Gutter Bypass Isolation Valve (Position)	PXS-PL-V130B	Yes (Position)	-
Accumulator A Level Sensor	PXS-JE-L021	Yes	-
Accumulator B Level Sensor	PXS-JE-L022	Yes	-
Accumulator A Level Sensor	PXS-JE-L023	Yes	-
Accumulator B Level Sensor	PXS-JE-L024	Yes	-
PRHR HX Inlet Temperature Sensor	PXS-JE-T064	Yes	-
IRWST Surface Temperature Sensor	PXS-JE-T041	Yes	-
IRWST Surface Temperature Sensor	PXS-JE-T042	Yes	-
IRWST Bottom Temperature Sensor	PXS-JE-T043	Yes	-
IRWST Bottom Temperature Sensor	PXS-JE-T044	Yes	-

Note: Dash (-) indicates not applicable.

Table 2.2.3-4
Inspections, Tests, Analyses, and Acceptance Criteria

Design Commitment	Inspections, Tests, Analyses	Acceptance Criteria
1. The functional arrangement of the PXS is as described in the Design Description of this Section 2.2.3.	Inspection of the as-built system will be performed.	The as-built PXS conforms with the functional arrangement as described in the Design Description of this Section 2.2.3.
2.a) The components identified in Table 2.2.3-1 as ASME Code Section III are designed and constructed in accordance with ASME Code Section III requirements.	Inspection will be conducted of the as-built components as documented in the ASME design reports.	The ASME Code Section III design reports exist for the as-built components identified in Table 2.2.3-1 as ASME Code Section III.
2.b) The piping identified in Table 2.2.3-2 as ASME Code Section III is designed and constructed in accordance with ASME Code Section III requirements.	Inspection will be conducted of the as-built piping as documented in the ASME design reports.	The ASME Code Section III design reports exist for the as-built piping identified in Table 2.2.3-2 as ASME Code Section III.
3.a) Pressure boundary welds in components identified in Table 2.2.3-1 as ASME Code Section III meet ASME Code Section III requirements.	Inspection of the as-built pressure boundary welds will be performed in accordance with the ASME Code Section III.	A report exists and concludes that the ASME Code Section III requirements are met for non-destructive examination of pressure boundary welds.
3.b) Pressure boundary welds in piping identified in Table 2.2.3-2 as ASME Code Section III meet ASME Code Section III requirements.	Inspection of the as-built pressure boundary welds will be performed in accordance with the ASME Code Section III.	A report exists and concludes that the ASME Code Section III requirements are met for non-destructive examination of pressure boundary welds.
4.a) The components identified in Table 2.2.3-1 as ASME Code Section III retain their pressure boundary integrity at their design pressure.	A hydrostatic test will be performed on the components required by the ASME Code Section III to be hydrostatically tested.	A report exists and concludes that the results of the hydrostatic test of the components identified in Table 2.2.3-1 as ASME Code Section III conform with the requirements of the ASME Code Section III.
4.b) The piping identified in Table 2.2.3-2 as ASME Code Section III retains its pressure boundary integrity at its design pressure.	A hydrostatic test will be performed on the piping required by the ASME Code Section III to be hydrostatically tested.	A report exists and concludes that the results of the hydrostatic test of the piping identified in Table 2.2.3-2 as ASME Code Section III conform with the requirements of the ASME Code Section III.

Table 2.2.3-4 (cont.)
Inspections, Tests, Analyses, and Acceptance Criteria

Design Commitment	Inspections, Tests, Analyses	Acceptance Criteria
5.a) The seismic Category I equipment identified in Table 2.2.3-1 can withstand seismic design basis loads without loss of safety function.	i) Inspection will be performed to verify that the seismic Category I equipment and valves identified in Table 2.2.3-1 are located on the Nuclear Island.	i) The seismic Category I equipment identified in Table 2.2.3-1 is located on the Nuclear Island.
	ii) Type tests, analyses, or a combination of type tests and analyses of seismic Category I equipment will be performed.	ii) A report exists and concludes that the seismic Category I equipment can withstand seismic design basis dynamic loads without loss of safety function. For the PXS containment recirculation and IRWST screens, a report exists and concludes that the screens can withstand seismic dynamic loads and also post-accident operating loads, including head loss and debris weights.
	iii) Inspection will be performed for the existence of a report verifying that the as-built equipment including anchorage is seismically bounded by the tested or analyzed conditions.	iii) A report exists and concludes that the as-built equipment including anchorage is seismically bounded by the tested or analyzed conditions. For the PXS containment recirculation and IRWST screens, a report exists and concludes that the as-built screens including their anchorage are bounded by the seismic loads and also post-accident operating loads, including head loss and debris weights.
5.b) Each of the lines identified in Table 2.2.3-2 for which functional capability is required is designed to withstand combined normal and seismic design basis loads without a loss of its functional capability.	Inspection will be performed verifying that the as-built piping meets the requirements for functional capability.	A report exists and concludes that each of the as-built lines identified in Table 2.2.3-2 for which functional capability is required meets the requirements for functional capability.

Table 2.2.3-4 (cont.)
Inspections, Tests, Analyses, and Acceptance Criteria

Design Commitment	Inspections, Tests, Analyses	Acceptance Criteria
6. Each of the as-built lines identified in Table 2.2.3-2 as designed for LBB meets the LBB criteria, or an evaluation is performed of the protection from the dynamic effects of a rupture of the line.	Inspection will be performed for the existence of an LBB evaluation report or an evaluation report on the protection from dynamic effects of a pipe break. Tier 1 Material, Section 3.3, Nuclear Island Buildings, contains the design descriptions and inspections, tests, analyses, and acceptance criteria for protection from the dynamic effects of pipe rupture.	An LBB evaluation report exists and concludes that the LBB acceptance criteria are met by the as-built RCS piping and piping materials, or a pipe break evaluation report exists and concludes that protection from the dynamic effects of a line break is provided.
7.a) The Class 1E equipment identified in Table 2.2.3-1 as being qualified for a harsh environment can withstand the environmental conditions that would exist before, during, and following a design basis accident without loss of safety function for the time required to perform the safety function.	i) Type tests, analyses, or a combination of type tests and analyses will be performed on Class 1E equipment located in a harsh environment. ii) Inspection will be performed of the as-built Class 1E equipment and the associated wiring, cables, and terminations located in a harsh environment.	i) A report exists and concludes that the Class 1E equipment identified in Table 2.2.3-1 as being qualified for a harsh environment can withstand the environmental conditions that would exist before, during, and following a design basis accident without loss of safety function for the time required to perform the safety function. ii) A report exists and concludes that the as-built Class 1E equipment and the associated wiring, cables, and terminations identified in Table 2.2.3-1 as being qualified for a harsh environment are bounded by type tests, analyses, or a combination of type tests and analyses.
7.b) The Class 1E components identified in Table 2.2.3-1 are powered from their respective Class 1E division.	Testing will be performed by providing a simulated test signal in each Class 1E division.	A simulated test signal exists at the Class 1E equipment identified in Table 2.2.3-1 when the assigned Class 1E division is provided the test signal.
7.c) Separation is provided between PXS Class 1E divisions, and between Class 1E divisions and non-Class 1E cable.	See Tier 1 Material, Table 3.3-6, item 7.d.	See Tier 1 Material, Table 3.3-6, item 7.d.
8.a) The PXS provides containment isolation of the PXS lines penetrating the containment.	See Tier 1 Material, Table 2.2.1-3, items 1 and 7.	See Tier 1 Material, Table 2.2.1-3, items 1 and 7.

Table 2.2.3-4 (cont.)
Inspections, Tests, Analyses, and Acceptance Criteria

Design Commitment	Inspections, Tests, Analyses	Acceptance Criteria
8.b) The PXS provides core decay heat removal during design basis events.	A heat removal performance test and analysis of the PRHR HX will be performed to determine the heat transfer from the HX. For the test, the reactor coolant hot leg temperature will be initially at ≥ 540°F with the reactor coolant pumps stopped. The IRWST water level for the test will be above the top of the HX. The IRWST water temperature is not specified for the test. The test will continue until the hot leg temperature decreases below 420°F.	A report exists and concludes that the PRHR HX heat transfer rate with the design basis number of PRHR HX tubes plugged is: ≥ 1.78 x 10^8 Btu/hr with 520°F HL Temp and 80°F IRWST temperatures. ≥ 1.11 x 10^8 Btu/hr with 420°F HL Temp and 80°F IRWST temperatures.
	Inspection of the elevation of the PRHR HX will be conducted.	The elevation of the centerline of the HX's upper channel head is greater than the HL centerline by at least 26.3 ft.
8.c) The PXS provides RCS makeup, boration, and safety injection during design basis events.	i) A low-pressure injection test and analysis for each CMT, each accumulator, each IRWST injection line, and each containment recirculation line will be conducted. Each test is initiated by opening isolation valve(s) in the line being tested. Test fixtures may be used to simulate squib valves.	i) The injection line flow resistance from each source is as follows:
	CMTs: Each CMT will be initially filled with water. All valves in these lines will be open during the test.	CMTs: The calculated flow resistance between each CMT and the reactor vessel is ≥ 1.81 x 10^{-5} ft/gpm^2 and ≤ 2.25 x 10^{-5} ft/gpm^2.
	Accumulators: Each accumulator will be partially filled with water and pressurized with nitrogen. All valves in these lines will be open during the test. Sufficient flow will be provided to fully open the check valves.	Accumulators: The calculated flow resistance between each accumulator and the reactor vessel is ≥ 1.47 x 10^{-5} ft/gpm^2 and ≤ 1.83 x 10^{-5} ft/gpm^2.

Table 2.2.3-4 (cont.)
Inspections, Tests, Analyses, and Acceptance Criteria

Design Commitment	Inspections, Tests, Analyses	Acceptance Criteria
	IRWST Injection: The IRWST will be partially filled with water. All valves in these lines will be open during the test. Sufficient flow will be provided to fully open the check valves.	IRWST Injection: The calculated flow resistance for each IRWST injection line between the IRWST and the reactor vessel is: Line A: $\geq 5.53 \times 10^{-6}$ ft/gpm^2 and $\leq 9.20 \times 10^{-6}$ ft/gpm^2 and Line B: $\geq 6.21 \times 10^{-6}$ ft/gpm^2 and $\leq 1.03 \times 10^{-5}$ ft/gpm^2.
	Containment Recirculation: A temporary water supply will be connected to the recirculation lines. All valves in these lines will be open during the test. Sufficient flow will be provided to fully open the check valves.	Containment Recirculation: The calculated flow resistance for each containment recirculation line between the containment and the reactor vessel is: Line A: $\leq 1.11 \times 10^{-5}$ ft/gpm^2 and Line B: $\leq 1.04 \times 10^{-5}$ ft/gpm^2.
	ii) A low-pressure test and analysis will be conducted for each CMT to determine piping flow resistance from the cold leg to the CMT. The test will be performed by filling the CMT via the cold leg balance line by operating the normal residual heat removal pumps.	ii) The flow resistance from the cold leg to the CMT is $\leq 7.21 \times 10^{-6}$ ft/gpm^2.
	iii) Inspections of the routing of the following pipe lines will be conducted: - CMT inlet line, cold leg to high point - PRHR HX inlet line, hot leg to high point	iii) These lines have no downward sloping sections between the connection to the RCS and the high point of the line.

Table 2.2.3-4 (cont.)
Inspections, Tests, Analyses, and Acceptance Criteria

Design Commitment	Inspections, Tests, Analyses	Acceptance Criteria
	iv) Inspections of the elevation of the following pipe lines will be conducted: - IRWST injection lines; IRWST connection to DVI nozzles - Containment recirculation lines; containment to IRWST lines - CMT discharge lines to DVI connection - PRHR HX outlet line to SG connection	iv) The maximum elevation of the top inside surface of these lines is less than the elevation of: - IRWST bottom inside surface - IRWST bottom inside surface - CMT bottom inside surface - PRHR HX lower channel head top inside surface
	v) Inspections of the elevation of the following tanks will be conducted: - CMTs - IRWST	v) The elevation of the bottom inside tank surface is higher than the direct vessel injection nozzle centerline by the following: - CMTs ≥ 7.5 ft - IRWST ≥ 3.4 ft
	vi) Inspections of each of the following tanks will be conducted: - CMTs - Accumulators - IRWST	vi) The calculated volume of each of the following tanks is as follows: - CMTs ≥ 2487 ft^3 - Accumulators ≥ 2000 ft^3 - IRWST ≥ 73,900 ft^3 between the tank outlet connection and the tank overflow
	vii) Inspection of the as-built components will be conducted for plates located above the containment recirculation screens.	vii) Plates located above each containment recirculation screen are no more than 1 ft above the top of the screen and extend out at least 10 ft perpendicular to and at least 7 ft to the side of the screen surface.

Table 2.2.3-4 (cont.)
Inspections, Tests, Analyses, and Acceptance Criteria

Design Commitment	Inspections, Tests, Analyses	Acceptance Criteria
	viii) Inspections of the IRWST and containment recirculation screens will be conducted. The inspections will include measurements of the pockets and the number of pockets used in each screen. The pocket frontal face area is based on a width times a height. The width is the distance between pocket centerlines for pockets located beside each other. The height is the distance between pocket centerlines for pockets located above each other. The pocket screen area is the total area of perforated plate inside each pocket; this area will be determined by inspection of the screen manufacturing drawings.	viii) The screens utilize pockets with a frontal face area of ≥ 6.2 in^2 and a screen surface area ≥ 140 in^2 per pocket. IRWST Screens A and B each have a sufficient number of pockets to provide a frontal face area ≥ 20 ft^2, a screen surface area ≥ 500 ft^2, and a screen mesh size of ≤ 0.0625 inch. IRWST Screen C has a sufficient number of pockets to provide a frontal face area ≥ 40 ft^2, a screen surface area ≥ 1000 ft^2, and a screen mesh size ≤ 0.0625 inch. Each containment recirculation screen has a sufficient number of pockets to provide a frontal face area ≥ 105 ft^2, a screen surface area ≥ 2500 ft^2, and a screen mesh size ≤ 0.0625 inch. A debris curb exists in front of the containment recirculation screens which is ≥ 2 ft above the loop compartment floor. The bottoms of the IRWST screens are located ≥ 6 in above the bottom of the IRWST.
	ix) Inspections will be conducted of the insulation used inside the containment on the ASME Class 1 lines, reactor vessel, reactor coolant pumps, pressurizer and steam generators.	ix) The type of insulation used on these lines and equipment is a metal reflective type or a suitable equivalent. If an insulation other than metal reflective insulation is used, a report must exist and conclude that the insulation is a suitable equivalent.
	Inspections will be conducted of other insulation used inside the containment within the zone of influence (ZOI).	The type of insulation used on these lines and equipment is a metal reflective type or a suitable equivalent. If an insulation other than metal reflective insulation is used, a report must exist and conclude that the insulation is a suitable equivalent.

Table 2.2.3-4 (cont.)
Inspections, Tests, Analyses, and Acceptance Criteria

Design Commitment	Inspections, Tests, Analyses	Acceptance Criteria
	Inspection will be conducted of other insulation below the maximum flood level of a design basis loss-of-coolant accident (LOCA).	The type of insulation used on these lines is metal reflective insulation, jacketed fiberglass, or a suitable equivalent. If an insulation other than metal reflective or jacketed fiberglass insulation is used, a report must exist and conclude that the insulation is a suitable equivalent.
	x) Inspections will be conducted of the as-built nonsafety-related coatings or of plant records of the nonsafety-related coatings used inside containment on walls, floors, ceilings, and structural steel except in the CVS room. Inspections will be conducted of the as-built non-safety-related coatings or of plant records of the non-safety-related coatings used on components below the maximum flood level of a design basis LOCA or located above the maximum flood level and not inside cabinets or enclosures.	x) A report exists and concludes that the coatings used on these surfaces have a dry film density of ≥ 100 lb/ft^3. If a coating is used that has a lower dry film density, a report must exist and conclude that the coating will not transport. A report exists and concludes that inorganic zinc coatings used on these surfaces are Safety – Service Level I.
	Inspections will be conducted on caulking, tags, and signs used inside containment below the maximum flood level of a design basis LOCA or located above the maximum flood level and not inside cabinets or enclosures.	A report exists and concludes that tags and signs used in these locations are made of steel or another metal with a density ≥ 100 lb/ft^3. In addition, a report exists and concludes that caulking used in these locations or coatings used on these signs or tags have a dry film density of ≥ 100 lb/ft^3. If a material is used that has a lower density, a report must exist and conclude that there is insufficient water flow to transport lightweight caulking, signs, or tags.
	Inspections will be conducted of ventilation filters and fiber-producing fire barriers used inside containment within the ZOI or below the maximum flood level of a design basis LOCA.	A report exists and concludes that the ventilation filters and fire barriers in these locations have a density of ≥ 100 lb/ft^3.

Table 2.2.3-4 (cont.)
Inspections, Tests, Analyses, and Acceptance Criteria

Design Commitment	Inspections, Tests, Analyses	Acceptance Criteria
	xi) Inspection of the as-built CMT inlet diffuser will be conducted. xii) Inspections will be conducted of the CMT level sensors (PXS-11A/B/D/C, - 12A/B/C/D, - 13A/B/C/D, - 14A/B/C/D) upper level tap lines.	xi) The CMT inlet diffuser has a flow area ≥ 165 in^2. xii) Each upper level tap line has a downward slope of ≥ 2.4 degrees from the centerline of the connection to the CMT to the centerline of the connection to the standpipe.
	xiii) Inspections will be conducted of the surfaces in the vicinity of the containment recirculation screens. The surfaces in the vicinity of the containment recirculation screens are the surfaces located above the bottom of the recirculation screens up to and including the bottom surface of the plate discussed in Table 2.2.3-4, item 8.c.vii, out at least 10 feet perpendicular to and at least 7 feet perpendicular to the side of the screen face. xiv) Inspections will be conducted of the exposed surfaces of the source range, intermediate range, and power range detectors.	xiii) These surfaces are stainless steel. xiv) These surfaces are made of stainless steel or titanium.
8.d) The PXS provides pH adjustment of water flooding the containment following design basis accidents.	Inspections of the pH adjustment baskets will be conducted.	pH adjustment baskets exist, with a total calculated volume ≥ 560 ft^3. The pH baskets are located below plant elevation 107 ft, 2 in.
9.a) The PXS provides a function to cool the outside of the reactor vessel during a severe accident.	i) A flow test and analysis for each IRWST drain line to the containment will be conducted. The test is initiated by opening isolation valves in each line. Test fixtures may be used to simulate squib valves. ii) Inspections of the as-built reactor vessel insulation will be performed.	i) The calculated flow resistance for each IRWST drain line between the IRWST and the containment is ≤ 4.07×10^{-6} ft/gpm^2. ii) The combined total flow area of the water inlets is not less than 6 ft^2. The combined total flow area of the steam outlet(s) is not less than 12 ft^2.

Table 2.2.3-4 (cont.)
Inspections, Tests, Analyses, and Acceptance Criteria

Design Commitment	Inspections, Tests, Analyses	Acceptance Criteria
		A report exists and concludes that the minimum flow area between the vessel insulation and reactor vessel for the flow path that vents steam is not less than 12 ft^2 considering the maximum deflection of the vessel insulation with a static pressure of 12.95 ft of water.
	iii) Inspections will be conducted of the flow path(s) from the loop compartments to the reactor vessel cavity.	iii) A flow path with a flow area not less than 6 ft^2 exists from the loop compartment to the reactor vessel cavity.
9.b) The accumulator discharge check valves (PXS-PL-V028A/B and V029A/B) are of a different check valve type than the CMT discharge check valves (PXS-PL-V016A/B and V017A/B).	An inspection of the accumulator and CMT discharge check valves is performed.	The accumulator discharge check valves are of a different check valve type than the CMT discharge check valves.
9.c) The equipment listed in Table 2.2.3-6 has sufficient thermal lag to withstand the effects of identified hydrogen burns associated with severe accidents.	Type tests, analyses, or a combination of type tests and analyses will be performed to determine the thermal lag of this equipment.	A report exists and concludes that the thermal lag of this equipment is greater than the value required.
10. Safety-related displays of the parameters identified in Table 2.2.3-1 can be retrieved in the MCR.	Inspection will be performed for the retrievability of the safety-related displays in the MCR.	Safety-related displays identified in Table 2.2.3-1 can be retrieved in the MCR.
11.a) Controls exist in the MCR to cause the remotely operated valves identified in Table 2.2.3-1 to perform their active function(s).	i) Testing will be performed on the squib valves identified in Table 2.2.3-1 using controls in the MCR, without stroking the valve. ii) Stroke testing will be performed on remotely operated valves other than squib valves identified in Table 2.2.3-1 using the controls in the MCR.	i) Controls in the MCR operate to cause a signal at the squib valve electrical leads that is capable of actuating the squib valve. ii) Controls in the MCR operate to cause remotely operated valves other than squib valves to perform their active functions.

Table 2.2.3-4 (cont.)
Inspections, Tests, Analyses, and Acceptance Criteria

Design Commitment	Inspections, Tests, Analyses	Acceptance Criteria
11.b) The valves identified in Table 2.2.3-1 as having PMS control perform their active function after receiving a signal from the PMS.	i) Testing will be performed on the squib valves identified in Table 2.2.3-1 using real or simulated signals into the PMS without stroking the valve. ii) Testing will be performed on the remotely operated valves other than squib valves identified in Table 2.2.3-1 using real or simulated signals into the PMS.	i) Squib valves receive an electrical signal at the valve electrical leads that is capable of actuating the valve after a signal is input to the PMS. ii) Remotely operated valves other than squib valves perform the active function identified in the table after a signal is input to the PMS.
	iii) Testing will be performed to demonstrate that remotely operated PXS isolation valves PXS-V014A/B, V015A/B, V108A/B open within the required response times.	iii) These valves open within 20 seconds after receipt of an actuation signal.
11.c) The valves identified in Table 2.2.3-1 as having DAS control perform their active function after receiving a signal from the DAS.	i) Testing will be performed on the squib valves identified in Table 2.2.3-1 using real or simulated signals into the DAS without stroking the valve. ii) Testing will be performed on the remotely operated valves other than squib valves identified in Table 2.2.3-1 using real or simulated signals into the DAS.	i) Squib valves receive an electrical signal at the valve electrical leads that is capable of actuating the valve after a signal is input to the DAS. ii) Remotely operated valves other than squib valves perform the active function identified in Table 2.2.3-1 after a signal is input to the DAS.

Table 2.2.3-4 (cont.)
Inspections, Tests, Analyses, and Acceptance Criteria

Design Commitment	Inspections, Tests, Analyses	Acceptance Criteria
12.a) The squib valves and check valves identified in Table 2.2.3-1 perform an active safety-related function to change position as indicated in the table.	i) Tests or type tests of squib valves will be performed that demonstrate the capability of the valve to operate under its design condition. ii) Inspection will be performed for the existence of a report verifying that the as-built squib valves are bounded by the tests or type tests. iii) Deleted iv) Exercise testing of the check valves with active safety functions identified in Table 2.2.3-1 will be performed under preoperational test pressure, temperature, and fluid flow conditions.	i) A test report exists and concludes that each squib valve changes position as indicated in Table 2.2.3-1 under design conditions. ii) A report exists and concludes that the as-built squib valves are bounded by the tests or type tests. iii) Deleted iv) Each check valve changes position as indicated in Table 2.2.3-1
12.b) After loss of motive power, the remotely operated valves identified in Table 2.2.3-1 assume the indicated loss of motive power position.	Testing of the remotely operated valves will be performed under the conditions of loss of motive power.	After loss of motive power, each remotely operated valve identified in Table 2.2.3-1 assumes the indicated loss of motive power position.
13. Displays of the parameters identified in Table 2.2.3-3 can be retrieved in the MCR.	Inspection will be performed for retrievability of the displays identified in Table 2.2.3-3 in the MCR.	Displays identified in Table 2.2.3-3 can be retrieved in the MCR.

Table 2.2.3-5

Component Name	Tag No.	Component Location
Passive Residual Heat Removal Heat Exchanger (PRHR HX)	PXS-ME-01	Containment Building
Accumulator Tank A	PXS-MT-01A	Containment Building
Accumulator Tank B	PXS-MT-01B	Containment Building
Core Makeup Tank (CMT) A	PXS-MT-02A	Containment Building
CMT B	PXS-MT-02B	Containment Building
IRWST	PXS-MT-03	Containment Building
IRWST Screen A	PXS-MY-Y01A	Containment Building
IRWST Screen B	PXS-MY-Y01B	Containment Building
IRWST Screen C	PXS-MY-Y01C	Containment Building
Containment Recirculation Screen A	PXS-MY-Y02A	Containment Building
Containment Recirculation Screen B	PXS-MY-Y02B	Containment Building
pH Adjustment Basket 3A	PXS-MY-Y03A	Containment Building
pH Adjustment Basket 3B	PXS-MY-Y03B	Containment Building
pH Adjustment Basket 4A	PXS-MY-Y04A	Containment Building
pH Adjustment Basket 4B	PXS-MY-Y04B	Containment Building

Table 2.2.3-6

Equipment	Tag No.	Function
Hot Leg Sample Isolation Valves	PSS-PL-V001A/B	Transfer open
Liquid Sample Line Containment Isolation Valves IRC	PSS-PL-V010A/B	Transfer open
Containment Pressure Sensors	PCS-012, 013, 014	Sense pressure
RCS Wide Range Pressure Sensors	RCS-191A, B, C, D	Sense pressure
SG1 Wide Range Level Sensors	SGS-011, 012, 015, 016	Sense level
SG2 Wide Range Level Sensors	SGS-013, 014, 017, 018	Sense level
Hydrogen Monitors	VLS-001, 002, 003	Sense concentration
Hydrogen Igniters	VLS-EH-01 through 64	Ignite hydrogen
Containment Electrical Penetrations	P01, P02, P03, P06, P09, P10, P11, P12, P13, P14, P15, P16, P18, P21, P22, P23, P24, P25, P26, P27, P28, P29, P30, P31, P32	Maintain containment boundary

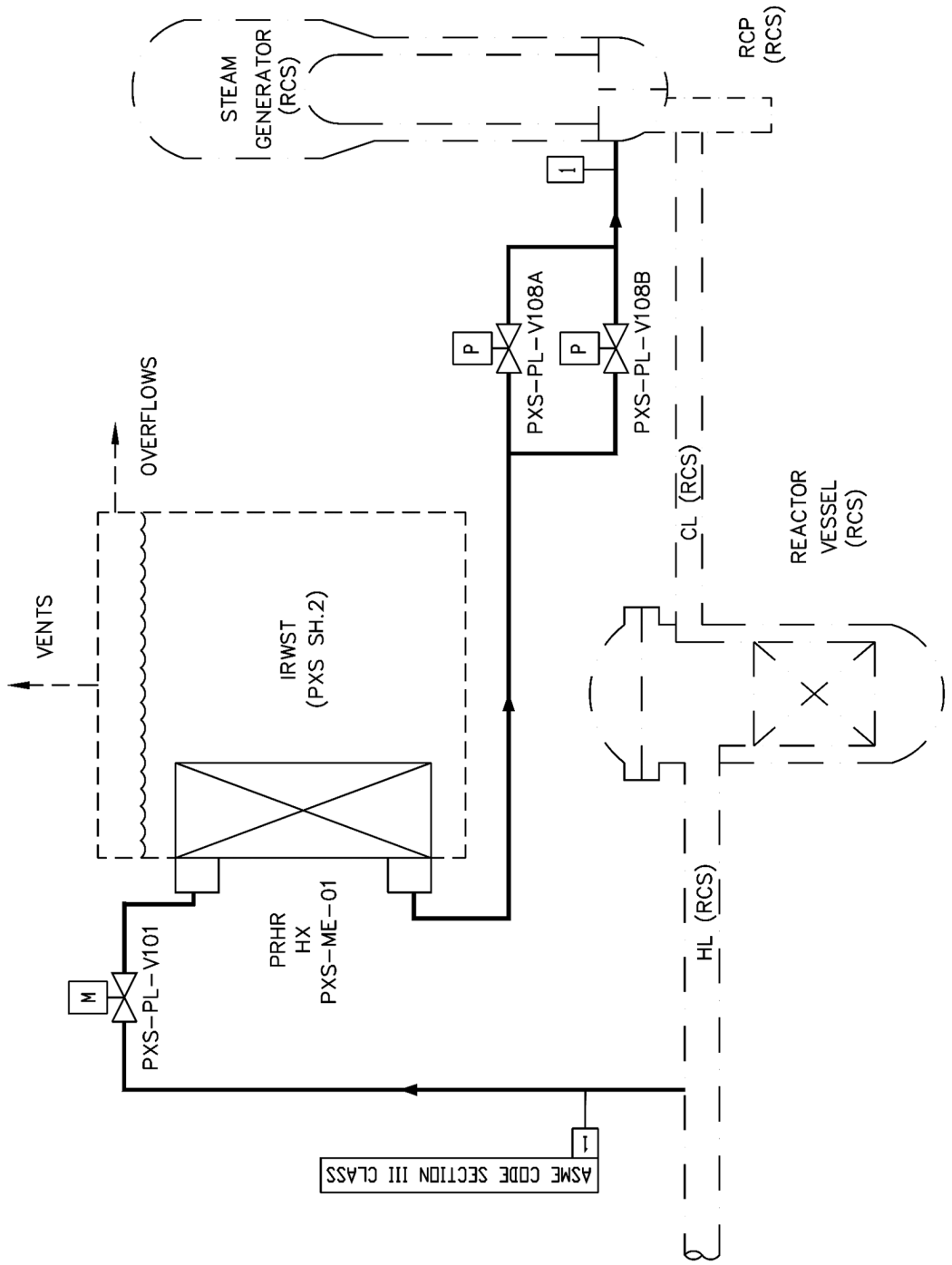

Figure 2.2.3-1 (Sheet 1 of 2)
Passive Core Cooling System

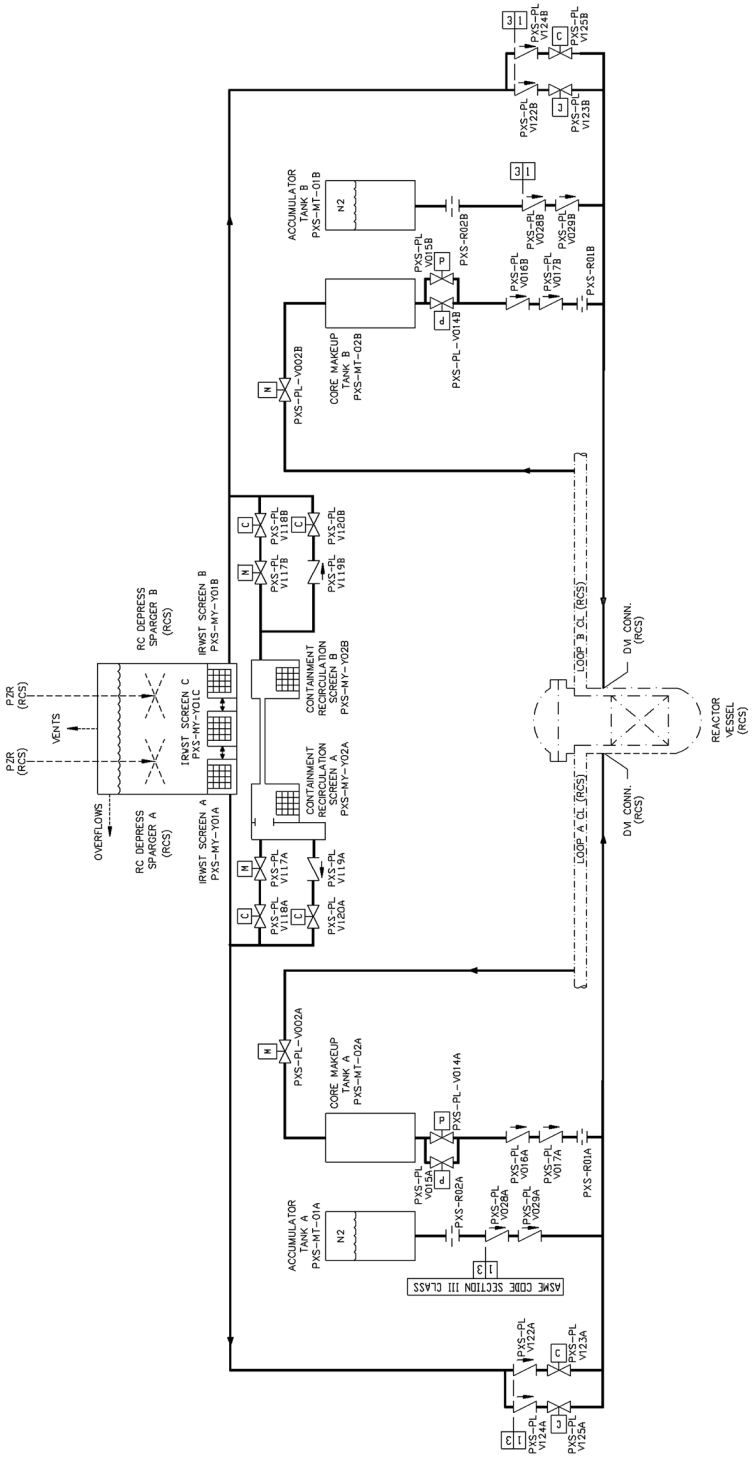

Figure 2.2.3-1 (Sheet 2 of 2)
Passive Core Cooling System

2.2.4 Steam Generator System

Design Description

The steam generator system (SGS) and portions of the main and startup feedwater system (FWS) transport and control feedwater from the condensate system to the steam generators during normal operation. The SGS and portions of the main steam system (MSS) and turbine system (MTS) transport and control steam from the steam generators to the turbine generator during normal operations. These systems also isolate the steam generators from the turbine generator and the condensate system during design basis accidents.

The SGS is as shown in Figure 2.2.4-1, sheets 1 and 2, and portions of the FWS, MSS, and MTS are as shown in Figure 2.2.4-1, sheet 3, and the locations of the components in these systems is as shown in Table 2.2.4-5.

1. The functional arrangement of the SGS and portions of the FWS, MSS, and MTS are as described in the Design Description of this Section 2.2.4.

2. a) The components identified in Table 2.2.4-1 as ASME Code Section III are designed and constructed in accordance with ASME Code Section III requirements.

   b) The piping identified in Table 2.2.4-2 as ASME Code Section III is designed and constructed in accordance with ASME Code Section III requirements.

3. a) Pressure boundary welds in components identified in Table 2.2.4-1 as ASME Code Section III meet ASME Code Section III requirements.

   b) Pressure boundary welds in piping identified in Table 2.2.4-2 as ASME Code Section III meet ASME Code Section III requirements.

4. a) The components identified in Table 2.2.4-1 as ASME Code Section III retain their pressure boundary integrity at their design pressure.

   b) The piping identified in Table 2.2.4-2 as ASME Code Section III retains its pressure boundary integrity at its design pressure.

5. a) The seismic Category I equipment identified in Table 2.2.4-1 can withstand seismic design basis loads without loss of safety function.

   b) Each of the lines identified in Table 2.2.4-2 for which functional capability is required is designed to withstand combined normal and seismic design basis loads without a loss of its functional capability.

6. Each of the as-built lines identified in Table 2.2.4-2 as designed for leak before break (LBB) meets the LBB criteria, or an evaluation is performed of the protection from the dynamic effects of a rupture of the line.

7. a) The Class 1E equipment identified in Table 2.2.4-1 as being qualified for a harsh environment can withstand the environmental conditions that would exist before, during, and following a design basis accident without loss of safety function for the time required to perform the safety function.

   b) The Class 1E components identified in Table 2.2.4-1 are powered from their respective Class 1E division.

   c) Separation is provided between SGS Class 1E divisions, and between Class 1E divisions and non-Class 1E cable.

8. The SGS provides the following safety-related functions:

   a) The SGS provides a heat sink for the reactor coolant system (RCS) and provides overpressure protection.

   b) During design basis events, the SGS limits steam generator blowdown and feedwater flow to the steam generator.

   c) The SGS preserves containment integrity by isolation of the SGS lines penetrating the containment. The inside containment isolation function (isolating the RCS and containment atmosphere from the environment) is provided by the steam generator, tubes, and SGS lines inside containment while isolation outside containment is provided by manual and automatic valves.

9. The SGS provides the following nonsafety-related functions:

   a) Components within the main steam system, main and startup feedwater system, and the main turbine system identified in Table 2.2.4-3 provide backup isolation of the SGS to limit steam generator blowdown and feedwater flow to the steam generator.

   b) During shutdown operations, the SGS removes decay heat by delivery of startup feedwater to the steam generator and venting of steam from the steam generators to the atmosphere.

10. Safety-related displays identified in Table 2.2.4-1 can be retrieved in the main control room (MCR).

11. a) Controls exist in the MCR to cause the remotely operated valves identified in Table 2.2.4-1 to perform active functions.

    b) The valves identified in Table 2.2.4-1 as having PMS control perform an active safety function after receiving a signal from PMS.

12. a) The motor-operated valves identified in Table 2.2.4-1 perform an active safety-related function to change position as indicated in the table.

    b) After loss of motive power, the remotely operated valves identified in Table 2.2.4-1 assume the indicated loss of motive power position.

Inspections, Tests, Analyses, and Acceptance Criteria

Table 2.2.4-4 specifies the inspections, tests, analyses, and associated acceptance criteria for the SGS.

Table 2.2.4-1

Equipment Name	Tag No.	ASME Code Section III	Seismic Cat. I	Remotely Operated Valve	Class 1E/ Qual. for Harsh Envir.	Safety-Related Display	Control PMS	Active Function	Loss of Motive Power Position
Main Steam Safety Valve SG01	SGS-PL-V030A	Yes	Yes	-	-/-	No	-	Transfer Open/ Transfer Closed	-
Main Steam Safety Valve SG02	SGS-PL-V030B	Yes	Yes	-	-/-	No	-	Transfer Open/ Transfer Closed	-
Main Steam Safety Valve SG01	SGS-PL-V031A	Yes	Yes	-	-/-	No	-	Transfer Open/ Transfer Closed	-
Main Steam Safety Valve SG02	SGS-PL-V031B	Yes	Yes	-	-/-	No	-	Transfer Open/ Transfer Closed	-
Main Steam Safety Valve SG01	SGS-PL-V032A	Yes	Yes	-	-/-	No	-	Transfer Open/ Transfer Closed	-
Main Steam Safety Valve SG02	SGS-PL-V032B	Yes	Yes	-	-/-	No	-	Transfer Open/ Transfer Closed	-

Note: Dash (-) indicates not applicable.

Table 2.2.4-1 (cont.)

Equipment Name	Tag No.	ASME Code Section III	Seismic Cat. I	Remotely Operated Valve	Class 1E/ Qual. for Harsh Envir.	Safety-Related Display	Control PMS	Active Function	Loss of Motive Power Position
Main Steam Safety Valve SG01	SGS-PL-V033A	Yes	Yes	-	-/-	No	-	Transfer Open/ Transfer Closed	-
Main Steam Safety Valve SG02	SGS-PL–V033B	Yes	Yes	-	-/-	No	-	Transfer Open/ Transfer Closed	-
Main Steam Safety Valve SG01	SGS-PL–V034A	Yes	Yes	-	-/-	No	-	Transfer Open/ Transfer Closed	-
Main Steam Safety Valve SG02	SGS-PL–V034B	Yes	Yes	-	-/-	No	-	Transfer Open/ Transfer Closed	-
Main Steam Safety Valve SG01	SGS-PL–V035A	Yes	Yes	-	-/-	No	-	Transfer Open/ Transfer Closed	-
Main Steam Safety Valve SG02	SGS-PL–V035B	Yes	Yes	-	-/-	No	-	Transfer Open/ Transfer Closed	-

Note: Dash (-) indicates not applicable.

Table 2.2.4-1 (cont.)

Equipment Name	Tag No.	ASME Code Section III	Seismic Cat. I	Remotely Operated Valve	Class 1E/ Qual. for Harsh Envir.	Safety-Related Display	Control PMS	Active Function	Loss of Motive Power Position
Power-operated Relief Valve Block Motor-operated Valve Steam Generator 01	SGS-PL-V027A	Yes	Yes	Yes	Yes/Yes	Yes (Valve Position)	Yes	Transfer Closed	As Is
Power-operated Relief Valve Block Motor-operated Valve Steam Generator 02	SGS-PL-V027B	Yes	Yes	Yes	Yes/Yes	Yes (Valve Position)	Yes	Transfer Closed	As Is
Steam Line Condensate Drain Isolation Valve	SGS-PL-V036A	Yes	Yes	Yes	Yes/Yes	Yes (Valve Position)	Yes	Transfer Closed	Closed
Steam Line Condensate Drain Isolation Valve	SGS-PL-V036B	Yes	Yes	Yes	Yes/Yes	Yes (Valve Position)	Yes	Transfer Closed	Closed
Main Steam Line Isolation Valve	SGS-PL-V040A	Yes	Yes	Yes	Yes/Yes	Yes (Valve Position)	Yes	Transfer Closed	As Is
Main Steam Line Isolation Valve	SGS-PL-V040B	Yes	Yes	Yes	Yes/Yes	Yes (Valve Position)	Yes	Transfer Closed	As Is
Steam Line Condensate Drain Control Valve	SGS-PL-V086A	Yes	Yes	Yes	Yes/Yes	No	Yes	Transfer Closed	Closed
Steam Line Condensate Drain Control Valve	SGS-PL-V086B	Yes	Yes	Yes	Yes/Yes	No	Yes	Transfer Closed	Closed

Table 2.2.4-1 (cont.)

Equipment Name	Tag No.	ASME Code Section III	Seismic Cat. I	Remotely Operated Valve	Class 1E/ Qual. for Harsh Envir.	Safety-Related Display	Control PMS	Active Function	Loss of Motive Power Position
Main Feedwater Isolation Valve	SGS-PL-V057A	Yes	Yes	Yes	Yes/Yes	Yes (Valve Position)	Yes	Transfer Closed	As Is
Main Feedwater Isolation Valve	SGS-PL-V057B	Yes	Yes	Yes	Yes/Yes	Yes (Valve Position)	Yes	Transfer Closed	As Is
Startup Feedwater Isolation Motor-operated Valve	SGS-PL-V067A	Yes	Yes	Yes	Yes/Yes	Yes (Valve Position)	Yes	Transfer Closed	As Is
Startup Feedwater Isolation Motor-operated Valve	SGS-PL-V067B	Yes	Yes	Yes	Yes/Yes	Yes (Valve Position)	Yes	Transfer Closed	As Is
Steam Generator Blowdown Isolation Valve	SGS-PL-V074A	Yes	Yes	Yes	Yes/Yes	Yes (Valve Position)	Yes	Transfer Closed	Closed
Steam Generator Blowdown Isolation Valve	SGS-PL-V074B	Yes	Yes	Yes	Yes/Yes	Yes (Valve Position)	Yes	Transfer Closed	Closed
Steam Generator Blowdown Isolation Valve	SGS-PL-V075A	Yes	Yes	Yes	Yes/Yes	No	Yes	Transfer Closed	Closed
Steam Generator Blowdown Isolation Valve	SGS-PL-V075B	Yes	Yes	Yes	Yes/Yes	No	Yes	Transfer Closed	Closed

Table 2.2.4-1 (cont.)

Equipment Name	Tag No.	ASME Code Section III	Seismic Cat. I	Remotely Operated Valve	Class 1E/ Qual. for Harsh Envir.	Safety-Related Display	Control PMS	Active Function	Loss of Motive Power Position
Power-operated Relief Valve	SGS-PL-V233A	Yes	Yes	Yes	Yes/Yes	Yes (Valve Position)	Yes	Transfer Closed	Closed
Power-operated Relief Valve	SGS-PL-V233B	Yes	Yes	Yes	Yes/Yes	Yes (Valve Position)	Yes	Transfer Closed	Closed
Main Steam Isolation Valve Bypass Isolation	SGS-PL-V240A	Yes	Yes	Yes	Yes/Yes	Yes (Valve Position)	Yes	Transfer Closed	Closed
Main Steam Isolation Valve Bypass Isolation	SGS-PL-V240B	Yes	Yes	Yes	Yes/Yes	Yes (Valve Position)	Yes	Transfer Closed	Closed
Main Feedwater Control Valve	SGS-PL-V250A	Yes	Yes	Yes	Yes/Yes	Yes (Valve Position)	Yes	Transfer Closed	Closed
Main Feedwater Control Valve	SGS-PL-V250B	Yes	Yes	Yes	Yes/Yes	Yes (Valve Position)	Yes	Transfer Closed	Closed
Startup Feedwater Control Valve	SGS-PL-V255A	Yes	Yes	Yes	Yes/Yes	Yes (Valve Position)	Yes	Transfer Closed	Closed
Startup Feedwater Control Valve	SGS-PL-V255B	Yes	Yes	Yes	Yes/Yes	Yes (Valve Position)	Yes	Transfer Closed	Closed

Table 2.2.4-1 (cont.)

Equipment Name	Tag No.	ASME Code Section III	Seismic Cat. I	Remotely Operated Valve	Class 1E/ Qual. for Harsh Envir.	Safety-Related Display	Control PMS	Active Function	Loss of Motive Power Position
Steam Generator 1 Narrow Range Level Sensor	SGS-001	No	Yes	-	Yes/Yes	Yes	-	-	-
Steam Generator 1 Narrow Range Level Sensor	SGS–002	No	Yes	-	Yes/Yes	Yes	-	-	-
Steam Generator 1 Narrow Range Level Sensor	SGS–003	No	Yes	-	Yes/Yes	Yes	-	-	-
Steam Generator 1 Narrow Range Level Sensor	SGS–004	No	Yes	-	Yes/Yes	Yes	-	-	-
Steam Generator 2 Narrow Range Level Sensor	SGS–005	No	Yes	-	Yes/Yes	Yes	-	-	-
Steam Generator 2 Narrow Range Level Sensor	SGS–006	No	Yes	-	Yes/Yes	Yes	-	-	-
Steam Generator 2 Narrow Range Level Sensor	SGS–007	No	Yes	-	Yes/Yes	Yes	-	-	-

Note: Dash (-) indicates not applicable.

Table 2.2.4-1 (cont.)

Equipment Name	Tag No.	ASME Code Section III	Seismic Cat. I	Remotely Operated Valve	Class 1E/ Qual. for Harsh Envir.	Safety-Related Display	Control PMS	Active Function	Loss of Motive Power Position
Steam Generator 2 Narrow Range Level Sensor	SGS-008	No	Yes	-	Yes/Yes	Yes	-	-	-
Steam Generator 1 Wide Range Level Sensor	SGS-011	No	Yes	-	Yes/Yes	Yes	-	-	-
Steam Generator 1 Wide Range Level Sensor	SGS-012	No	Yes	-	Yes/Yes	Yes	-	-	-
Steam Generator 2 Wide Range Level Sensor	SGS-013	No	Yes	-	Yes/Yes	Yes	-	-	-
Steam Generator 2 Wide Range Level Sensor	SGS-014	No	Yes	-	Yes/Yes	Yes	-	-	-
Steam Generator 1 Wide Range Level Sensor	SGS-015	No	Yes	-	Yes/Yes	Yes	-	-	-
Steam Generator 1 Wide Range Level Sensor	SGS-016	No	Yes	-	Yes/Yes	Yes	-	-	-
Steam Generator 2 Wide Range Level Sensor	SGS-017	No	Yes	-	Yes/Yes	Yes	-	-	-

Note: Dash (-) indicates not applicable.

Table 2.2.4-1 (cont.)

Equipment Name	Tag No.	ASME Code Section III	Seismic Cat. I	Remotely Operated Valve	Class 1E/ Qual. for Harsh Envir.	Safety-Related Display	Control PMS	Active Function	Loss of Motive Power Position
Steam Generator 2 Wide Range Level Sensor	SGS-018	No	Yes	-	Yes/Yes	Yes	-	-	-
Main Steam Line Steam Generator 1 Pressure Sensor	SGS-030	No	Yes	-	Yes/Yes	Yes	-	-	-
Main Steam Line Steam Generator 1 Pressure Sensor	SGS-031	No	Yes	-	Yes/No	Yes	-	-	-
Main Steam Line Steam Generator 1 Pressure Sensor	SGS-032	No	Yes	-	Yes/Yes	Yes	-	-	-
Main Steam Line Steam Generator 1 Pressure Sensor	SGS-033	No	Yes	-	Yes/No	Yes	-	-	-
Main Steam Line Steam Generator 2 Pressure Sensor	SGS-034	No	Yes	-	Yes/Yes	Yes	-	-	-
Main Steam Line Steam Generator 2 Pressure Sensor	SGS-035	No	Yes	-	Yes/No	Yes	-	-	-
Main Steam Line Steam Generator 2 Pressure Sensor	SGS-036	No	Yes	-	Yes/Yes	Yes	-	-	-

Note: Dash (-) indicates not applicable.

Table 2.2.4-1 (cont.)

Equipment Name	Tag No.	ASME Code Section III	Seismic Cat. I	Remotely Operated Valve	Class 1E/ Qual. for Harsh Envir.	Safety-Related Display	Control PMS	Active Function	Loss of Motive Power Position
Main Steam Line Steam Generator 2 Pressure Sensor	SGS-037	No	Yes	-	Yes/No	Yes	-	-	-
Steam Generator 1 Startup Feedwater Flow Sensor	SGS-55A	No	Yes	-	Yes/No	Yes	-	-	-
Steam Generator 1 Startup Feedwater Flow Sensor	SGS-55B	No	Yes	-	Yes/No	Yes	-	-	-
Steam Generator 2 Startup Feedwater Flow Sensor	SGS-56A	No	Yes	-	Yes/No	Yes	-	-	-
Steam Generator 2 Startup Feedwater Flow Sensor	SGS-56B	No	Yes	-	Yes/No	Yes	-	-	-

Note: Dash (-) indicates not applicable.

Table 2.2.4-2

Line Name	Line Number	ASME Code Section III	Leak Before Break	Functional Capability Required
Main Feedwater Line	SGS-PL-L002A, L002B	Yes	No	No
Main Feedwater Line	SGS-PL-L003A, L003B	Yes	No	No
Startup Feedwater Line	SGS-PL-L004A, L004B	Yes	No	No
Startup Feedwater Line	SGS-PL-L005A, L005B	Yes	No	No
Main Steam Line (within containment)	SGS-PL-L006A, L006B	Yes	Yes	Yes
Main Steam Line (outside of containment)	SGS-PL-L006A, L006B	Yes	No	Yes
Main Steam Line	SGS-PL-L007A, L007B	Yes	No	No
Safety Valve Inlet Line	SGS-PL-L015A, L015B, L015C, L015D, L015E, L015F, L015G, L015H, L015J, L015K, L015L, L015M	Yes	No	Yes
Safety Valve Discharge Line	SGS-PL-L018A, L018B, L018C, L018D, L018E, L018F, L018G, L018H, L018J, L018K, L018L, L018M	Yes	No	Yes
Power-operated Relief Block Valve Inlet Line	SGS-PL-L024A, L024B	Yes	No	No
Power-operated Relief Valve Inlet Line	SGS-PL-L014A, L014B	Yes	No	No

Note: Dash (-) indicates not applicable.

Table 2.2.4-2 (cont.)

Line Name	Line Number	ASME Code Section III	Leak Before Break	Functional Capability Required
Main Steam Isolation Valve Bypass Inlet Line	SGS-PL-L022A, L022B	Yes	No	No
Main Steam Isolation Valve Bypass Outlet Line	SGS-PL-L023A, L023B	Yes	No	No
Main Steam Condensate Drain Line	SGS-PL-L021A, L021B	Yes	No	No
Steam Generator Blowdown Line	SGS-PL-L009A, L009B	Yes	No	No
Steam Generator Blowdown Line	SGS-PL-L027A, L027B	Yes	No	No
Steam Generator Blowdown Line	SGS-PL-L010A, L010B	Yes	No	No

Note: Dash (-) indicates not applicable.

Table 2.2.4-3

Equipment Name	Tag No.	Control Function
Turbine Stop Valve	MTS-PL-V001A	Close
Turbine Stop Valve	MTS-PL-V001B	Close
Turbine Control Valve	MTS-PL-V002A	Close
Turbine Control Valve	MTS-PL-V002B	Close
Turbine Stop Valve	MTS-PL-V003A	Close
Turbine Stop Valve	MTS-PL-V003B	Close
Turbine Control Valve	MTS-PL-V004A	Close
Turbine Control Valve	MTS-PL-V004B	Close
Turbine Bypass Control Valve	MSS-PL-V001	Close
Turbine Bypass Control Valve	MSS-PL-V002	Close
Turbine Bypass Control Valve	MSS-PL-V003	Close
Turbine Bypass Control Valve	MSS-PL-V004	Close
Turbine Bypass Control Valve	MSS-PL-V005	Close
Turbine Bypass Control Valve	MSS-PL-V006	Close
Moisture Separator Reheater 2nd Stage Steam Isolation Valve	MSS-PL-V015A	Close
Moisture Separator Reheater 2nd Stage Steam Isolation Valve	MSS-PL-V015B	Close
Main Feedwater Pump	FWS-MP-02A	Trip
Main Feedwater Pump	FWS-MP-02B	Trip
Main Feedwater Pump	FWS-MP-02C	Trip
Startup Feedwater Pump	FWS-MP-03A	Trip
Startup Feedwater Pump	FWS-MP-03B	Trip

Table 2.2.4-4
Inspections, Tests, Analyses, and Acceptance Criteria

Design Commitment	Inspections, Tests, Analyses	Acceptance Criteria
1. The functional arrangement of the SGS and portions of the FWS, MSS, and MTS are as described in the Design Description of this Section 2.2.4.	Inspection of the as-built system will be performed.	The as-built SGS and portions of the FWS, MSS, and MTS conform with the functional arrangement as defined in the Design Description of this Section 2.2.4.
2.a) The components identified in Table 2.2.4-1 as ASME Code Section III are designed and constructed in accordance with ASME Code Section III requirements.	Inspection will be conducted of the as-built components as documented in the ASME design reports.	The ASME Code Section III design reports exist for the as-built components identified in Table 2.2.4-1 as ASME Code Section III.
2.b) The piping identified in Table 2.2.4-2 as ASME Code Section III is designed and constructed in accordance with ASME Code Section III requirements.	Inspection will be conducted of the as-built piping as documented in the ASME design reports.	The ASME Code Section III design reports exist for the as-built piping identified in Table 2.2.4-2 as ASME Code Section III.
3.a) Pressure boundary welds in components identified in Table 2.2.4-1 as ASME Code Section III meet ASME Code Section III requirements.	Inspection of the as-built pressure boundary welds will be performed in accordance with the ASME Code Section III.	A report exists and concludes that the ASME Code Section III requirements are met for non-destructive examination of pressure boundary welds.
3.b) Pressure boundary welds in piping identified in Table 2.2.4-2 as ASME Code Section III meet ASME Code Section III requirements.	Inspection of the as-built pressure boundary welds will be performed in accordance with the ASME Code Section III.	A report exists and concludes that the ASME Code Section III requirements are met for non-destructive examination of pressure boundary welds.

Table 2.2.4-4 (cont.)
Inspections, Tests, Analyses, and Acceptance Criteria

Design Commitment	Inspections, Tests, Analyses	Acceptance Criteria
4.a) The components identified in Table 2.2.4-1 as ASME Code Section III retain their pressure boundary integrity at their design pressure.	A hydrostatic test will be performed on the components required by the ASME Code Section III to be hydrostatically tested.	A report exists and concludes that the results of the hydrostatic test of the components identified in Table 2.2.4-1 as ASME Code Section III conform with the requirements of the ASME Code Section III.
4.b) The piping identified in Table 2.2.4-2 as ASME Code Section III retains its pressure boundary integrity at its design pressure.	A hydrostatic test will be performed on the piping required by the ASME Code Section III to be hydrostatically tested.	A report exists and concludes that the results of the hydrostatic test of the piping identified in Table 2.2.4-2 as ASME Code Section III conform with the requirements of the ASME Code Section III.
5.a) The seismic Category I equipment identified in Table 2.2.4-1 can withstand seismic design basis loads without loss of safety function.	i) Inspection will be performed to verify that the seismic Category I equipment identified in Table 2.2.4-1 is located on the Nuclear Island. ii) Type tests, analyses, or a combination of type tests and analyses of seismic Category I equipment will be performed. iii) Inspection will be performed for the existence of a report verifying that the as-built equipment including anchorage is seismically bounded by the tested or analyzed conditions.	i) The seismic Category I equipment identified in Table 2.2.4-1 is located on the Nuclear Island. ii) A report exists and concludes that the seismic Category I equipment can withstand seismic design basis loads without loss of safety function. iii) A report exists and concludes that the as-built equipment including anchorage is seismically bounded by the tested or analyzed conditions.
5.b) Each of the lines identified in Table 2.2.4-2 for which functional capability is required is designed to withstand combined normal and seismic design basis loads without a loss of its functional capability.	Inspection will be performed for the existence of a report concluding that the as-built piping meets the requirements for functional capability.	A report exists and concludes that each of the as-built lines identified in Table 2.2.4-2 for which functional capability is required meets the requirements for functional capability.

Table 2.2.4-4 (cont.)
Inspections, Tests, Analyses, and Acceptance Criteria

Design Commitment	Inspections, Tests, Analyses	Acceptance Criteria
6. Each of the as-built lines identified in Table 2.2.4-2 as designed for LBB meets the LBB criteria, or an evaluation is performed of the protection from the dynamic effects of a rupture of the line.	Inspection will be performed for the existence of an LBB evaluation report or an evaluation report on the protection from effects of a pipe break. Tier 1 Material, Section 3.3, Nuclear Island Buildings, contains the design descriptions and inspections, tests, analyses, and acceptance criteria for protection from the dynamic effects of pipe rupture.	An LBB evaluation report exists and concludes that the LBB acceptance criteria are met by the as-built RCS piping and piping materials, or a pipe break evaluation report exists and concludes that protection from the dynamic effects of a line break is provided.
7.a) The Class 1E equipment identified in Table 2.2.4-1 as being qualified for a harsh environment can withstand the environmental conditions that would exist before, during, and following a design basis accident without loss of safety function for the time required to perform the safety function.	i) Type tests, analyses, or a combination of type tests and analyses will be performed on Class 1E equipment located in a harsh environment. ii) Inspection will be performed of the as-built Class 1E equipment and the associated wiring, cables, and terminations located in a harsh environment.	i) A report exists and concludes that the Class 1E equipment identified in Table 2.2.4-1 as being qualified for a harsh environment can withstand the environmental conditions that would exist before, during, and following a design basis accident without loss of safety function for the time required to perform the safety function. ii) A report exists and concludes that the as-built Class 1E equipment and the associated wiring, cables, and terminations identified in Table 2.2.4-1 as being qualified for a harsh environment are bounded by type tests, analyses, or a combination of type tests and analyses.
7.b) The Class 1E components identified in Table 2.2.4-1 are powered from their respective Class 1E division.	Testing will be performed by providing a simulated test signal in each Class 1E division.	A simulated test signal exists at the Class 1E equipment identified in Table 2.2.4-1 when the assigned Class 1E division is provided the test signal.
7.c) Separation is provided between SGS Class 1E divisions, and between Class 1E divisions and non-Class 1E cable.	See Tier 1 Material, Table 3.3-6, item 7.d.	See Tier 1 Material, Table 3.3-6, item 7.d.

Table 2.2.4-4 (cont.)
Inspections, Tests, Analyses, and Acceptance Criteria

Design Commitment	Inspections, Tests, Analyses	Acceptance Criteria
8.a) The SGS provides a heat sink for the RCS and provides overpressure protection in accordance with Section III of the ASME Boiler and Pressure Vessel Code.	i) Inspections will be conducted to confirm that the value of the vendor code plate rating of the steam generator safety valves is greater than or equal to system relief requirements. ii) Testing and analyses in accordance with ASME Code Section III will be performed to determine set pressure.	i) The sum of the rated capacities recorded on the valve vendor code plates of the steam generator safety valves exceeds 8,240,000 lb/hr per steam generator. ii) A report exists to indicate the set pressure of the valves is less than 1305 psig.
8.b) During design basis events, the SGS limits steam generator blowdown and feedwater flow to the steam generator.	i) Testing will be performed to confirm isolation of the main feedwater, startup feedwater, blowdown, and main steam lines. See item 11 in this table. ii) Inspection will be performed for the existence of a report confirming that the area of the flow limiting orifice within the SG main steam outlet nozzle will limit releases to the containment.	See item 11 in this table. ii) A report exists to indicate the installed flow limiting orifice within the SG main steam line discharge nozzle does not exceed 1.4 sq. ft.
8.c) The SGS preserves containment integrity by isolation of the SGS lines penetrating the containment.	See Tier 1 Material, Table 2.2.1-3, item 7.	See Tier 1 Material, Table 2.2.1-3, item 7.
9.a) Components within the main steam system, main and startup feedwater system, and the main turbine system identified in Table 2.2.4-3 provide backup isolation of the SGS to limit steam generator blowdown and feedwater flow to the steam generator.	i) Testing will be performed to confirm closure of the valves identified in Table 2.2.4-3. ii) Testing will be performed to confirm the trip of the pumps identified in Table 2.2.4-3.	i) The valves identified in Table 2.2.4-3 close after a signal is generated by the PMS. ii) The pumps identified in Table 2.2.4-3 trip after a signal is generated by the PMS.

Table 2.2.4-4 (cont.)
Inspections, Tests, Analyses, and Acceptance Criteria

Design Commitment	Inspections, Tests, Analyses	Acceptance Criteria
9.b) During shutdown operations, the SGS removes decay heat by delivery of startup feedwater to the steam generator and venting of steam from the steam generators to the atmosphere.	i) Tests will be performed to demonstrate the ability of the startup feedwater system to provide feedwater to the steam generators. ii) Type tests and/or analyses will be performed to demonstrate the ability of the power-operated relief valves to discharge steam from the steam generators to the atmosphere.	i) See Tier 1 Material, Table 2.4.1-2, Item 2. ii) A report exists and concludes that each power-operated relief valve will relieve greater than 300,000 lb/hr at 1106 psia ±10 psi.
10. Safety-related displays identified in Table 2.2.4-1 can be retrieved in the MCR.	Inspection will be performed for retrievability of the safety-related displays in the MCR.	Safety-related displays identified in Table 2.2.4-1 can be retrieved in the MCR.
11.a) Controls exist in the MCR to cause the remotely operated valves identified in Table 2.2.4-1 to perform active functions.	Stroke testing will be performed on the remotely operated valves listed in Table 2.2.4-1 using controls in the MCR.	Controls in the MCR operate to cause the remotely operated valves to perform active safety functions.
11.b) The valves identified in Table 2.2.4-1 as having PMS control perform an active safety function after receiving a signal from PMS.	i) Testing will be performed on the remotely operated valves listed in Table 2.2.4-1 using real or simulated signals into the PMS. ii) Testing will be performed to demonstrate that remotely operated SGS isolation valves SGS-V027A/B, V040A/B, V057A/B, V250A/B close within the required response times.	i) The remotely-operated valves identified in Table 2.2.4-1 as having PMS control perform the active function identified in the table after receiving a signal from the PMS. ii) These valves close within the following times after receipt of an actuation signal: V027A/B < 44 sec V040A/B, V057A/B < 5 sec V250A/B < 5 sec

Table 2.2.4-4 (cont.)
Inspections, Tests, Analyses, and Acceptance Criteria

Design Commitment	Inspections, Tests, Analyses	Acceptance Criteria
12.a) The motor-operated valves identified in Table 2.2.4-1 perform an active safety-related function to change position as indicated in the table.	i) Tests or type tests of motor-operated valves will be performed to demonstrate the capability of the valve to operate under its design conditions. ii) Inspection will be performed for the existence of a report verifying that the as-built motor-operated valves are bounded by the tests or type tests. iii) Tests of the motor-operated valves will be performed under pre-operational flow, differential pressure, and temperature conditions.	i) A test report exists and concludes that each motor-operated valve changes position as indicated in Table 2.2.4-1 under design conditions. ii) A report exists and concludes that the as-built motor-operated valves are bounded by the tests or type tests. iii) Each motor-operated valve changes position as indicated in Table 2.2.4-1 under pre-operational test conditions.
12.b) After loss of motive power, the remotely operated valves identified in Table 2.2.4-1 assume the indicated loss of motive power position.	Testing of the remotely operated valves will be performed under the conditions of loss of motive power.	After loss of motive power, each remotely operated valve identified in Table 2.2.4-1 assumes the indicated loss of motive power position. Motive power to SGS-PL-V040A/B and SGS-PL-V057A/B is electric power to the actuator from plant services.

Table 2.2.4-5

Component Name	Tag No.	Component Location
Main Steam Line Isolation Valve	SGS-PL-V040A	Auxiliary Building
Main Steam Line Isolation Valve	SGS-PL-V040B	Auxiliary Building
Main Feedwater Isolation Valve	SGS-PL-V057A	Auxiliary Building
Main Feedwater Isolation Valve	SGS-PL-V057B	Auxiliary Building
Main Feedwater Control Valve	SGS-PL-V250A	Auxiliary Building
Main Feedwater Control Valve	SGS-PL-V250B	Auxiliary Building
Turbine Stop Valves	MTS-PL-V001A MTS-PL-V001B MTS-PL-V003A MTS-PL-V003B	Turbine Building
Turbine Control Valves	MTS-PL-V002A MTS-PL-V002B MTS-PL-V004A MTS-PL-V004B	Turbine Building
Main Feedwater Pumps	FWS-MP-02A FWS-MP-02B FWS-MP-02C	Turbine Building
Feedwater Booster Pumps	FWS-MP-01A FWS-MP-01B FWS-MP-01C	Turbine Building

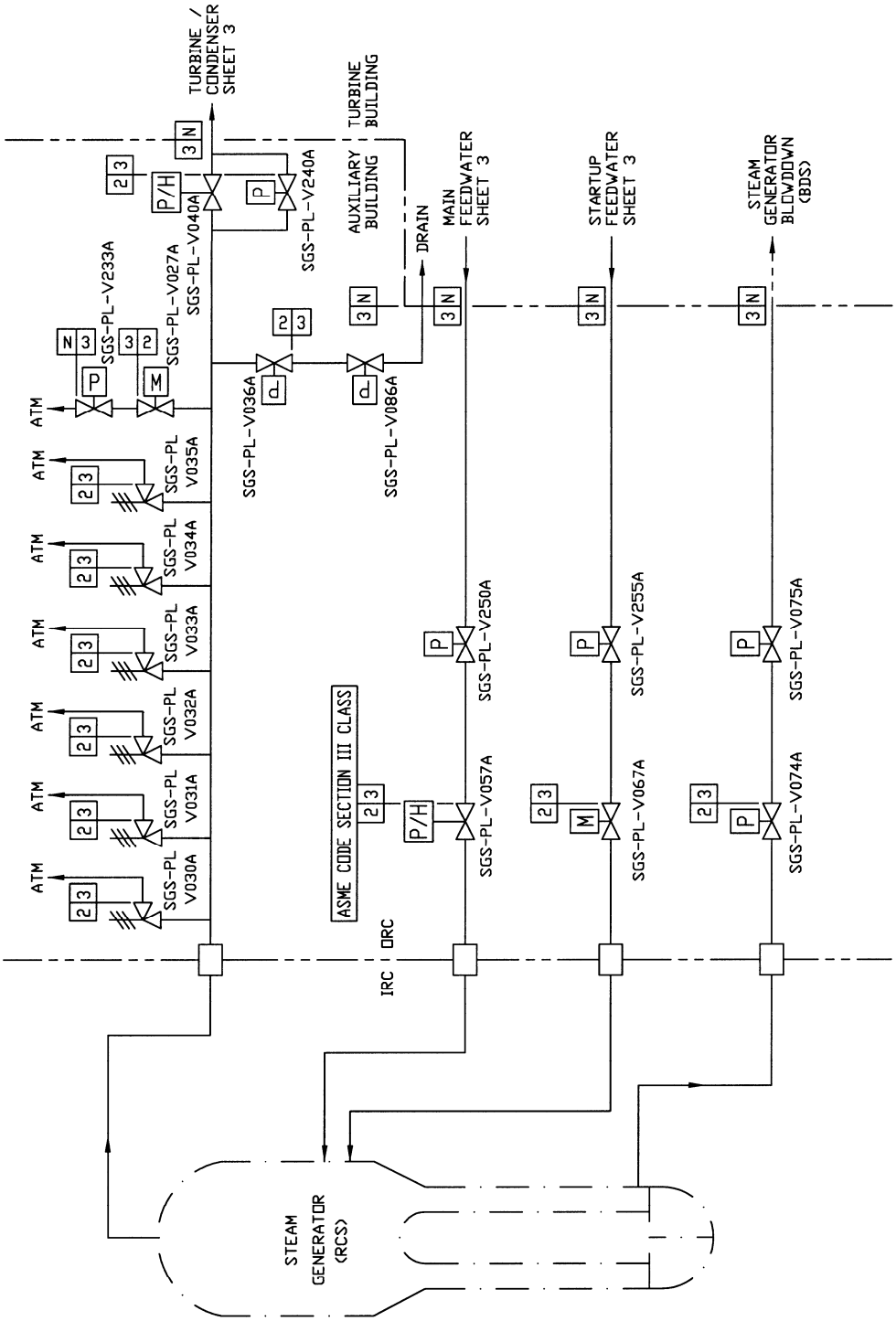

Figure 2.2.4-1 (Sheet 1 of 3)
Steam Generator System

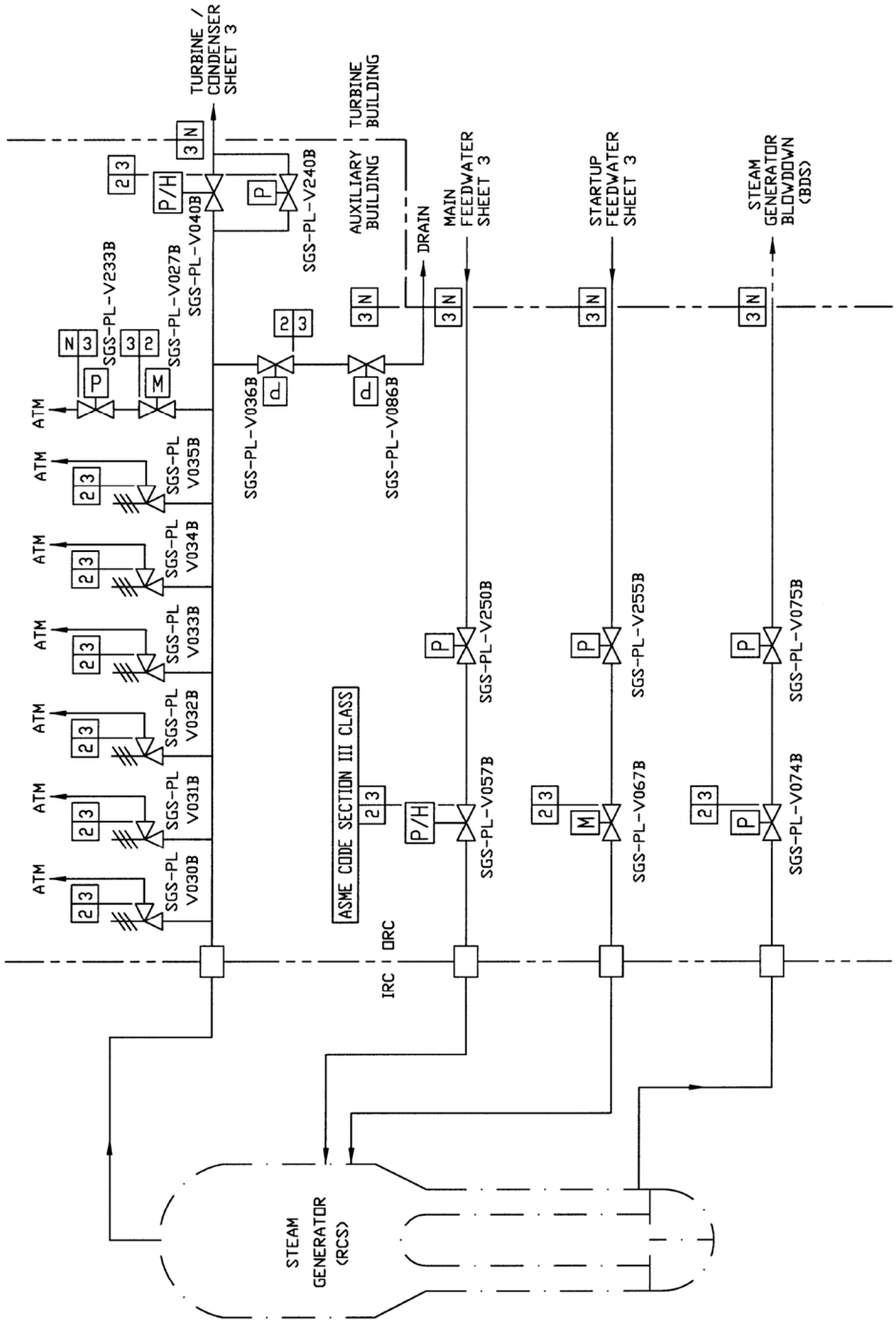

Figure 2.2.4-1 (Sheet 2 of 3)
Steam Generator System

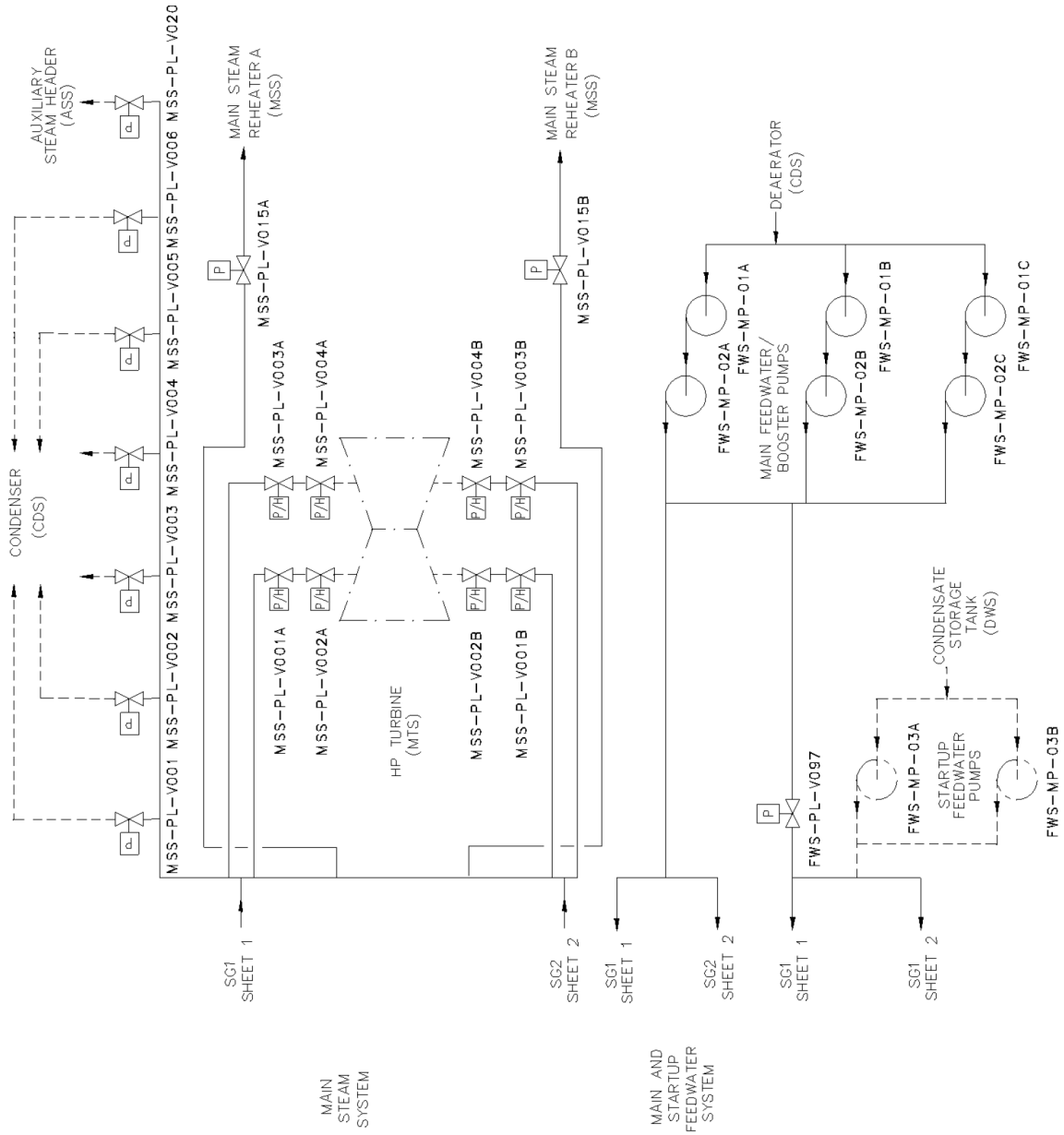

Figure 2.2.4-1 (Sheet 3 of 3)
Steam Generator System

2.2.5 Main Control Room Emergency Habitability System

Design Description

The main control room emergency habitability system (VES) provides a supply of breathable air for the main control room (MCR) occupants and maintains the MCR at a positive pressure with respect to the surrounding areas whenever ac power is not available to operate the nuclear island nonradioactive ventilation system (VBS) or high radioactivity is detected in the MCR air supply. (See Tier 1 material, Section 3.5 for Radiation Monitoring). The VES also limits the heatup of the MCR, the 1E instrumentation and control (I&C) equipment rooms, and the Class 1E dc equipment rooms by using the heat capacity of surrounding structures.

The VES is as shown in Figure 2.2.5-1 and the component locations of the VES are as shown in Table 2.2.5-6.

1. The functional arrangement of the VES is as described in the Design Description of this Section 2.2.5.

2. a) The components identified in Table 2.2.5-1 as ASME Code Section III are designed and constructed in accordance with ASME Code Section III requirements.

   b) The piping identified in Table 2.2.5-2 as ASME Code Section III is designed and constructed in accordance with ASME Code Section III requirements.

3. a) Pressure boundary welds in components identified in Table 2.2.5-1 as ASME Code Section III meet ASME Code Section III requirements.

   b) Pressure boundary welds in piping identified in Table 2.2.5-2 as ASME Code Section III meet ASME Code Section III requirements.

4. a) The components identified in Table 2.2.5-1 as ASME Code Section III retain their pressure boundary integrity at their design pressure.

   b) The piping identified in Table 2.2.5-2 as ASME Code Section III retains its pressure boundary integrity at its design pressure.

5. a) The seismic Category I equipment identified in Table 2.2.5-1 can withstand seismic design basis loads without loss of safety function.

   b) Each of the lines identified in Table 2.2.5-2 for which functional capability is required is designed to withstand combined normal and seismic design basis loads without a loss of its functional capability.

6. a) The Class 1E components identified in Table 2.2.5-1 are powered from their respective Class 1E division.

   b) Separation is provided between VES Class 1E divisions, and between Class 1E divisions and non-Class 1E cable.

7. The VES provides the following safety-related functions:

   a) The VES provides a 72-hour supply of breathable quality air for the occupants of the MCR.

   b) The VES maintains the MCR pressure boundary at a positive pressure with respect to the surrounding areas. There is a discharge of air through the MCR vestibule.

   c) The heat loads within the MCR, the I&C equipment rooms, and the Class 1E dc equipment rooms are within design basis assumptions to limit the heatup of the rooms identified in Table 2.2.5-4.

   d) The system provides a passive recirculation flow of MCR air to maintain main control room dose rates below an acceptable level during VES operation.

   e) The system provides shielding below the VES filter that is sufficient to ensure main control room doses are below an acceptable level during VES operation.

8. Safety-related displays identified in Table 2.2.5-1 can be retrieved in the MCR.

9. a) Controls exist in the MCR to cause those remotely operated valves identified in Table 2.2.5-1 to perform their active functions.

   b) The valves identified in Table 2.2.5-1 as having protection and safety monitoring system (PMS) control perform their active safety function after receiving a signal from the PMS.

10. After loss of motive power, the remotely operated valves identified in Table 2.2.5-1 assume the indicated loss of motive power position.

11. Displays of the parameters identified in Table 2.2.5-3 can be retrieved in the MCR.

12. The background noise level in the MCR does not exceed 65 dB(A) at the operator workstations when the VES is operating.

Inspections, Tests, Analyses, and Acceptance Criteria

Table 2.2.5-5 specifies the inspections, tests, analyses, and associated acceptance criteria for the VES.

Table 2.2.5-1

Equipment Name	Tag No.	ASME Code Section III	Seismic Cat. I	Remotely Operated Valve	Class 1E/ Qual. for Harsh Envir.	Safety-Related Display	Control PMS	Active Function	Loss of Motive Power Position
Emergency Air Storage Tank 01	VES-MT-01	No	Yes	-	-/-	-	-	-	-
Emergency Air Storage Tank 02	VES-MT-02	No	Yes	-	-/-	-	-	-	-
Emergency Air Storage Tank 03	VES-MT-03	No	Yes	-	-/-	-	-	-	-
Emergency Air Storage Tank 04	VES-MT-04	No	Yes	-	-/-	-	-	-	-
Emergency Air Storage Tank 05	VES-MT-05	No	Yes	-	-/-	-	-	-	-
Emergency Air Storage Tank 06	VES-MT-06	No	Yes	-	-/-	-	-	-	-
Emergency Air Storage Tank 07	VES-MT-07	No	Yes	-	-/-	-	-	-	-
Emergency Air Storage Tank 08	VES-MT-08	No	Yes	-	-/-	-	-	-	-
Emergency Air Storage Tank 09	VES-MT-09	No	Yes	-	-/-	-	-	-	-
Emergency Air Storage Tank 10	VES-MT-10	No	Yes	-	-/-	-	-	-	-

Note: Dash (-) indicates not applicable.

Table 2.2.5-1 (cont.)

Equipment Name	Tag No.	ASME Code Section III	Seismic Cat. I	Remotely Operated Valve	Class 1E/ Qual. for Harsh Envir.	Safety-Related Display	Control PMS	Active Function	Loss of Motive Power Position
Emergency Air Storage Tank 11	VES-MT-11	No	Yes	-	-/-	-	-	-	-
Emergency Air Storage Tank 12	VES-MT-12	No	Yes	-	-/-	-	-	-	-
Emergency Air Storage Tank 13	VES-MT-13	No	Yes	-	-/-	-	-	-	-
Emergency Air Storage Tank 14	VES-MT-14	No	Yes	-	-/-	-	-	-	-
Emergency Air Storage Tank 15	VES-MT-15	No	Yes	-	-/-	-	-	-	-
Emergency Air Storage Tank 16	VES-MT-16	No	Yes	-	-/-	-	-	-	-
Emergency Air Storage Tank 17	VES-MT-17	No	Yes	-	-/-	-	-	-	-
Emergency Air Storage Tank 18	VES-MT-18	No	Yes	-	-/-	-	-	-	-
Emergency Air Storage Tank 19	VES-MT-19	No	Yes	-	-/-	-	-	-	-
Emergency Air Storage Tank 20	VES-MT-20	No	Yes	-	-/-	-	-	-	-

Note: Dash (-) indicates not applicable.

Table 2.2.5-1 (cont.)

Equipment Name	Tag No.	ASME Code Section III	Seismic Cat. I	Remotely Operated Valve	Class 1E/ Qual. for Harsh Envir.	Safety-Related Display	Control PMS	Active Function	Loss of Motive Power Position
Emergency Air Storage Tank 21	VES-MT-21	No	Yes	-	-/-	-	-	-	-
Emergency Air Storage Tank 22	VES-MT-22	No	Yes	-	-/-	-	-	-	-
Emergency Air Storage Tank 23	VES-MT-23	No	Yes	-	-/-	-	-	-	-
Emergency Air Storage Tank 24	VES-MT-24	No	Yes	-	-/-	-	-	-	-
Emergency Air Storage Tank 25	VES-MT-25	No	Yes	-	-/-	-	-	-	-
Emergency Air Storage Tank 26	VES-MT-26	No	Yes	-	-/-	-	-	-	-
Emergency Air Storage Tank 27	VES-MT-27	No	Yes	-	-/-	-	-	-	-
Emergency Air Storage Tank 28	VES-MT-28	No	Yes	-	-/-	-	-	-	-
Emergency Air Storage Tank 29	VES-MT-29	No	Yes	-	-/-	-	-	-	-
Emergency Air Storage Tank 30	VES-MT-30	No	Yes	-	-/-	-	-	-	-

Note: Dash (-) indicates not applicable.

Table 2.2.5-1 (cont.)

Equipment Name	Tag No.	ASME Code Section III	Seismic Cat. I	Remotely Operated Valve	Class 1E/ Qual. for Harsh Envir.	Safety-Related Display	Control PMS	Active Function	Loss of Motive Power Position
Emergency Air Storage Tank 31	VES-MT-31	No	Yes	-	-/-	-	-	-	-
Emergency Air Storage Tank 32	VES-MT-32	No	Yes	-	-/-	-	-	-	-
Air Delivery Alternate Isolation Valve	VES-PL-V001	Yes	Yes	No	-/-	No	-	Transfer Open	-
Eductor Flow Path Isolation Valve	VES-PL-V045	Yes	Yes	No	-/-	No	-	Transfer Close	-
Eductor Bypass Isolation Valve	VES-PL-V046	Yes	Yes	No	-/-	No	-	Transfer Open	-
Pressure Regulating Valve A	VES-PL-V002A	Yes	Yes	No	-/-	No	-	Throttle Flow	-
Pressure Regulating Valve B	VES-PL-V002B	Yes	Yes	No	-/-	No	-	Throttle Flow	-
MCR Air Delivery Isolation Valve A	VES-PL-V005A	Yes	Yes	Yes	Yes/No	No	Yes	Transfer Open	Open
MCR Air Delivery Isolation Valve B	VES-PL-V005B	Yes	Yes	Yes	Yes/No	No	Yes	Transfer Open	Open

Note: Dash (-) indicates not applicable.

Table 2.2.5-1 (cont.)

Equipment Name	Tag No.	ASME Code Section III	Seismic Cat. I	Remotely Operated Valve	Class 1E/ Qual. for Harsh Envir.	Safety-Related Display	Control PMS	Active Function	Loss of Motive Power Position
Temporary Instrument Isolation Valve A	VES-PL-V018	Yes	Yes	No	-/-	No	No	Transfer Open	-
Temporary Instrument Isolation Valve B	VES-PL-V019	Yes	Yes	No	-/-	No	No	Transfer Open	-
MCR Pressure Relief Isolation Valve A	VES-PL-V022A	Yes	Yes	Yes	Yes/No	No	Yes	Transfer Open	Open
MCR Pressure Relief Isolation Valve B	VES-PL-V022B	Yes	Yes	Yes	Yes/No	No	Yes	Transfer Open	Open
Air Tank Safety Relief Valve A	VES-PL-V040A	Yes	Yes	No	-/-	No	-	Transfer Open	-
Air Tank Safety Relief Valve B	VES-PL-V040B	Yes	Yes	No	-/-	No	-	Transfer Open	-
Air Tank Safety Relief Valve C	VES-PL-V040C	Yes	Yes	No	-/-	No	-	Transfer Open	-
Air Tank Safety Relief Valve D	VES-PL-V040D	Yes	Yes	No	-/-	No	-	Transfer Open	-
Main Air Flow Path Isolation Valve	VES-PL-V044	Yes	Yes	No	-/-	No	-	Transfer Close	-

Note: Dash (-) indicates not applicable.

Table 2.2.5-1 (cont.)

Equipment Name	Tag No.	ASME Code Section III	Seismic Cat. I	Remotely Operated Valve	Class 1E/ Qual. for Harsh Envir.	Safety-Related Display	Control PMS	Active Function	Loss of Motive Power Position
MCR Air Filtration Line Eductor	VES-PY-N01	Yes	Yes	-	-	-	-	-	-
MCR Air Filtration Line Charcoal Filter	VES-MY-F01	No	Yes	-	-	-	-	-	-
MCR Air Filtration Line HEPA Filter	VES-MY-F02	No	Yes	-	-	-	-	-	-
MCR Air Filtration Line Postfilter	VES-MY-F03	No	Yes	-	-	-	-	-	-
MCR Filter Shielding	12401-NS-01	No	Yes	-	-	-	-	-	-
MCR Gravity Relief Dampers	VES-MD-D001A	No	Yes	-	-	-	-	-	-
MCR Gravity Relief Dampers	VES-MD-D001B	No	Yes	-	-	-	-	-	-
MCR Air Filtration Line Supply Damper	VES-MD-D002	No	Yes	-	-	-	-	-	-
MCR Air Filtration Line Supply Damper	VES-MD-D003	No	Yes	-	-	-	-	-	-

Note: Dash (-) indicates not applicable.

Table 2.2.5-1 (cont.)

Equipment Name	Tag No.	ASME Code Section III	Seismic Cat. I	Remotely Operated Valve	Class 1E/ Qual. for Harsh Envir.	Safety-Related Display	Control PMS	Active Function	Loss of Motive Power Position
MCR Air Filtration Line Silencer	VES-MY-Y01	No	Yes	-	-	-	-	-	-
MCR Air Filtration Line Silencer	VES-MY-Y02	No	Yes	-	-	-	-	-	-
MCR Air Delivery Line Flow Sensor	VES-003A	No	Yes	-	Yes/No	Yes	-	-	-
MCR Air Delivery Line Flow Sensor	VES-003B	No	Yes	-	Yes/No	Yes	-	-	-
MCR Differential Pressure Sensor A	VES-004A	No	Yes	-	Yes/No	Yes	-	-	-
MCR Differential Pressure Sensor B	VES-004B	No	Yes	-	Yes/No	Yes	-	-	-

Note: Dash (-) indicates not applicable.

Table 2.2.5-2

Line Name	Line Number	ASME Code Section III	Functional Capability Required
MCR Relief Line	VES-PL-022A	Yes	Yes
MCR Relief Line	VES-PL-022B	Yes	Yes

Table 2.2.5-3

Equipment	Tag No.	Display
Air Storage Tank Pressure	VES-001A	Yes
Air Storage Tank Pressure	VES-001B	Yes

Table 2.2.5-4

Room Name	Room Numbers	Heat Load 0 to 24 Hours (Btu/s)	Heat Load 24 to 72 Hours (Btu/s)
MCR Envelope	12401	26.1 (hour 0 through 0.5) 15.6 (hour 0.5 through 3.5) 5.8 (hour 3.5 through 24)	2.9
I&C Rooms	12301, 12305	8.8	0
I&C Rooms	12302, 12304	13.0	4.2
dc Equipment Rooms	12201, 12205	3.7 (hour 0 through 1) 2.4 (hour 2 through 24)	0
dc Equipment Rooms	12203, 12207	5.8 (hour 0 through 1) 4.5 (hour 2 through 24)	2.0

Table 2.2.5-5
Inspections, Tests, Analyses, and Acceptance Criteria

Design Commitment	Inspections, Tests, Analyses	Acceptance Criteria
1. The functional arrangement of the VES is as described in the Design Description of this Section 2.2.5.	Inspection of the as-built system will be performed.	The as-built VES conforms with the functional arrangement described in the Design Description of this Section 2.2.5.
2.a) The components identified in Table 2.2.5-1 as ASME Code Section III are designed and constructed in accordance with ASME Code Section III requirements.	Inspection will be conducted of the as-built components as documented in the ASME design reports.	The ASME Code Section III design reports exist for the as-built components identified in Table 2.2.5-1 as ASME Code Section III.
2.b) The piping identified in Table 2.2.5-2 as ASME Code Section III is designed and constructed in accordance with ASME Code Section III requirements.	Inspection will be conducted of the as-built piping as documented in the ASME design reports.	The ASME Code Section III design reports exist for the as-built piping identified in Table 2.2.5-2 as ASME Code Section III.
3.a) Pressure boundary welds in components identified in Table 2.2.5-1 as ASME Code Section III meet ASME Code Section III requirements.	Inspection of the as-built pressure boundary welds will be performed in accordance with the ASME Code Section III.	A report exists and concludes that the ASME Code Section III requirements are met for non-destructive examination of pressure boundary welds.
3.b) Pressure boundary welds in piping identified in Table 2.2.5-2 as ASME Code Section III meet ASME Code Section III requirements.	Inspection of the as-built pressure boundary welds will be performed in accordance with the ASME Code Section III.	A report exists and concludes that the ASME Code Section III requirements are met for non-destructive examination of pressure boundary welds.
4.a) The components identified in Table 2.2.5-1 as ASME Code Section III retain their pressure boundary integrity at their design pressure.	A hydrostatic test will be performed on the components required by the ASME Code Section III to be hydrostatically tested.	A report exists and concludes that the results of the hydrostatic test of the components identified in Table 2.2.5-1 as ASME Code Section III conform with the requirements of the ASME Code Section III.
4.b) The piping identified in Table 2.2.5-2 as ASME Code Section III retains its pressure boundary integrity at its design pressure.	A hydrostatic test will be performed on the piping required by the ASME Code Section III to be hydrostatically tested.	A report exists and concludes that the results of the hydrostatic test of the piping identified in Table 2.2.5-2 as ASME Code Section III conform with the requirements of the ASME Code Section III.

Table 2.2.5-5 (cont.)
Inspections, Tests, Analyses, and Acceptance Criteria

Design Commitment	Inspections, Tests, Analyses	Acceptance Criteria
5.a) The seismic Category I equipment identified in Table 2.2.5-1 can withstand seismic design basis loads without loss of safety function.	i) Inspection will be performed to verify that the seismic Category I equipment and valves identified in Table 2.2.5-1 are located on the Nuclear Island. ii) Type tests, analyses, or a combination of type tests and analyses of seismic Category I equipment will be performed. iii) Inspection will be performed for the existence of a report verifying that the as-built equipment including anchorage is seismically bounded by the tested or analyzed conditions.	i) The seismic Category I equipment identified in Table 2.2.5-1 is located on the Nuclear Island. ii) A report exists and concludes that the seismic Category I equipment can withstand seismic design basis loads without loss of safety function. iii) A report exists and concludes that the as-built equipment including anchorage is seismically bounded by the tested or analyzed conditions.
5.b) Each of the lines identified in Table 2.2.5-2 for which functional capability is required is designed to withstand combined normal and seismic design basis loads without a loss of its functional capability.	Inspection will be performed for the existence of a report verifying that the as-built piping meets the requirements for functional capability.	A report exists and concludes that each of the as-built lines identified in Table 2.2.5-2 for which functional capability is required meets the requirements for functional capability.
6.a) The Class 1E components identified in Table 2.2.5-1 are powered from their respective Class 1E division.	Testing will be performed by providing a simulated test signal in each Class 1E division.	A simulated test signal exists at the Class 1E equipment identified in Table 2.2.5-1 when the assigned Class 1E division is provided the test signal.
6.b) Separation is provided between VES Class 1E divisions, and between Class 1E divisions and non-Class 1E cable.	See Tier 1 Material, Table 3.3-6, item 7.d.	See Tier 1 Material, Table 3.3-6, item 7.d.

Table 2.2.5-5 (cont.)
Inspections, Tests, Analyses, and Acceptance Criteria

Design Commitment	Inspections, Tests, Analyses	Acceptance Criteria
7.a) The VES provides a 72-hour supply of breathable quality air for the occupants of the MCR.	i) Testing will be performed to confirm that the required amount of air flow is delivered to the MCR. ii) Analysis of storage capacity will be performed based on manufacturers data. iii) MCR air samples will be taken during VES testing and analyzed for quality.	i) The air flow rate from the VES is at least 60 scfm and not more than 70 scfm. ii) The calculated storage capacity is greater than or equal to 327,574 scf. iii) The MCR air is of breathable quality.
7.b) The VES maintains the MCR pressure boundary at a positive pressure with respect to the surrounding areas.	i) Testing will be performed with VES flow rate between 60 and 70 scfm to confirm that the MCR is capable of maintaining the required pressurization of the pressure boundary. ii) Air leakage into the MCR will be measured during VES testing using a tracer gas.	i) The MCR pressure boundary is pressurized to greater than or equal to 1/8-in. water gauge with respect to the surrounding area. ii) Air leakage into the MCR is less than or equal to 10 cfm.
7.c) The heat loads within the MCR, the I&C equipment rooms, and the Class 1E dc equipment rooms are within design basis assumptions to limit the heatup of the rooms identified in Table 2.2.5-4.	An analysis will be performed to determine that the heat loads from as-built equipment within the rooms identified in Table 2.2.5-4 are less than or equal to the design basis assumptions.	A report exists and concludes that: the heat loads within rooms identified in Table 2.2.5-4 are less than or equal to the specified values or that an analysis report exists that concludes: - The temperature and humidity in the MCR remain within limits for reliable human performance for the 72-hour period. - The maximum temperature for the 72-hour period for the I&C rooms is less than or equal to 120°F. - The maximum temperature for the 72-hour period for the Class 1E dc equipment rooms is less than or equal to 120°F.

Table 2.2.5-5 (cont.)
Inspections, Tests, Analyses, and Acceptance Criteria

Design Commitment	Inspections, Tests, Analyses	Acceptance Criteria
7d) The system provides a passive recirculation flow of MCR air to maintain main control room dose rates below an acceptable level during VES operation.	Testing will be performed to confirm that the required amount of air flow circulates through the MCR passive filtration system,	The air flow rate at the outlet of the MCR passive filtration system is at least 600 cfm greater than the flow measured by VES-003A/B.
7.e) Shielding below the VES Filter is capable of providing attenuation that is sufficient to ensure main control room doses are below an acceptable level during VES operation.	Inspection will be performed for the existence of a report verifying that the as-built shielding meets the requirements for functional capability.	A report exists and concludes that the as-built shielding identified in Table 2.2.5-1 meets the functional requirements and exists below the filtration unit, and within its vertical projection.
8. Safety-related displays identified in Table 2.2.5-1 can be retrieved in the MCR.	Inspection will be performed for retrievability of the safety-related displays in the MCR.	Safety-related displays identified in Table 2.2.5-1 can be retrieved in the MCR.
9.a) Controls exist in the MCR to cause remotely operated valves identified in Table 2.2.5-1 to perform their active functions.	Stroke testing will be performed on remotely operated valves identified in Table 2.2.5-1 using the controls in the MCR.	Controls in the MCR operate to cause remotely operated valves identified in Table 2.2.5-1 to perform their active safety functions.
9.b) The valves identified in Table 2.2.5-1 as having PMS control perform their active safety function after receiving a signal from the PMS.	Testing will be performed on remotely operated valves listed in Table 2.2.5-1 using real or simulated signals into the PMS.	The remotely operated valves identified in Table 2.2.5-1 as having PMS control perform the active safety function identified in the table after receiving a signal from the PMS.
10. After loss of motive power, the remotely operated valves identified in Table 2.2.5-1 assume the indicated loss of motive power position.	Testing of the remotely operated valves will be performed under the conditions of loss of motive power.	After loss of motive power, each remotely operated valve identified in Table 2.2.5-1 assumes the indicated loss of motive power position.
11. Displays of the parameters identified in Table 2.2.5-3 can be retrieved in the MCR.	Inspection will be performed for retrievability of the parameters in the MCR.	The displays identified in Table 2.2.5-3 can be retrieved in the MCR.
12. The background noise level in the MCR does not exceed 65 dB(A) at the operator workstations when VES is operating.	The as-built VES will be operated, and background noise levels in the MCR will be measured at the operator work stations with the plant not operating.	The background noise level in the MCR does not exceed 65 dB(A) at the operator work stations when the VES is operating.

Table 2.2.5-6

Component Name	Tag Number	Component Location
Emergency Air Storage Tank 01	VES-MT-01	Auxiliary Building
Emergency Air Storage Tank 02	VES-MT-02	Auxiliary Building
Emergency Air Storage Tank 03	VES-MT-03	Auxiliary Building
Emergency Air Storage Tank 04	VES-MT-04	Auxiliary Building
Emergency Air Storage Tank 05	VES-MT-05	Auxiliary Building
Emergency Air Storage Tank 06	VES-MT-06	Auxiliary Building
Emergency Air Storage Tank 07	VES-MT-07	Auxiliary Building
Emergency Air Storage Tank 08	VES-MT-08	Auxiliary Building
Emergency Air Storage Tank 09	VES-MT-09	Auxiliary Building
Emergency Air Storage Tank 10	VES-MT-10	Auxiliary Building
Emergency Air Storage Tank 11	VES-MT-11	Auxiliary Building
Emergency Air Storage Tank 12	VES-MT-12	Auxiliary Building
Emergency Air Storage Tank 13	VES-MT-13	Auxiliary Building
Emergency Air Storage Tank 14	VES-MT-14	Auxiliary Building
Emergency Air Storage Tank 15	VES-MT-15	Auxiliary Building
Emergency Air Storage Tank 16	VES-MT-16	Auxiliary Building
Emergency Air Storage Tank 17	VES-MT-17	Auxiliary Building
Emergency Air Storage Tank 18	VES-MT-18	Auxiliary Building
Emergency Air Storage Tank 19	VES-MT-19	Auxiliary Building
Emergency Air Storage Tank 20	VES-MT-20	Auxiliary Building
Emergency Air Storage Tank 21	VES-MT-21	Auxiliary Building
Emergency Air Storage Tank 22	VES-MT-22	Auxiliary Building
Emergency Air Storage Tank 23	VES-MT-23	Auxiliary Building
Emergency Air Storage Tank 24	VES-MT-24	Auxiliary Building
Emergency Air Storage Tank 25	VES-MT-25	Auxiliary Building
Emergency Air Storage Tank 26	VES-MT-26	Auxiliary Building
Emergency Air Storage Tank 27	VES-MT-27	Auxiliary Building
Emergency Air Storage Tank 28	VES-MT-28	Auxiliary Building

Table 2.2.5-6 (cont.)

Component Name	Tag Number	Component Location
Emergency Air Storage Tank 29	VES-MT-29	Auxiliary Building
Emergency Air Storage Tank 30	VES-MT-30	Auxiliary Building
Emergency Air Storage Tank 31	VES-MT-31	Auxiliary Building
Emergency Air Storage Tank 32	VES-MT-32	Auxiliary Building

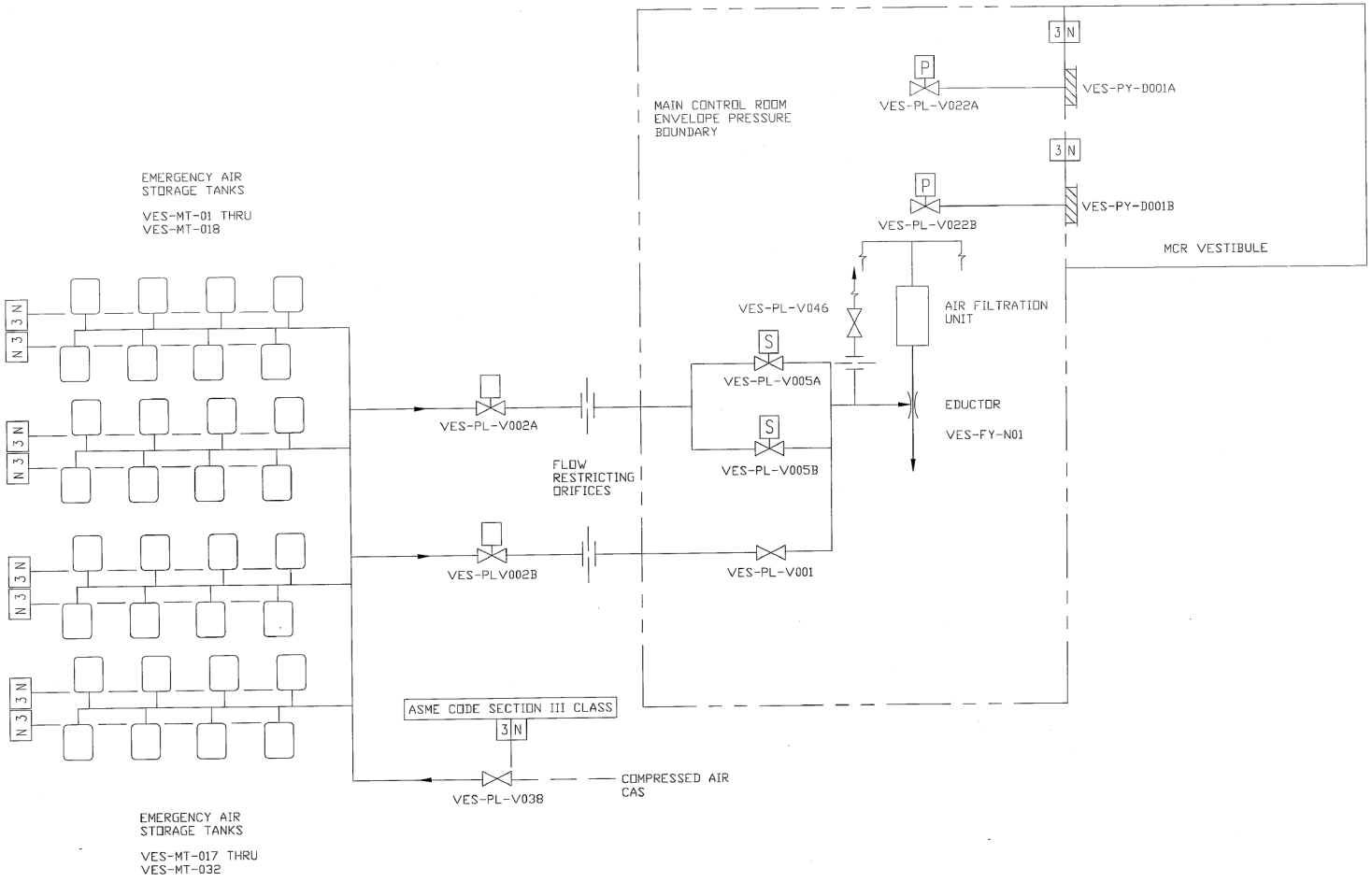

Figure 2.2.5-1
Main Control Room Emergency Habitability System

2.3 Auxiliary Systems

2.3.1 Component Cooling Water System

Design Description

The component cooling water system (CCS) removes heat from various plant components and transfers this heat to the service water system (SWS) during normal modes of plant operation including power generation, shutdown and refueling. The CCS has two pumps and two heat exchangers.

The CCS is as shown in Figure 2.3.1-1 and the CCS component locations are as shown in Table 2.3.1-3.

1. The functional arrangement of the CCS is as described in the Design Description of this Section 2.3.1.

2. The CCS preserves containment integrity by isolation of the CCS lines penetrating the containment.

3. The CCS provides the nonsafety-related functions of transferring heat from the normal residual heat removal system (RNS) during shutdown and the spent fuel pool cooling system during all modes of operation to the SWS.

4. Controls exist in the main control room (MCR) to cause the pumps identified in Table 2.3.1-1 to perform the listed functions.

5. Displays of the parameters identified in Table 2.3.1-1 can be retrieved in the MCR.

Inspections, Tests, Analyses, and Acceptance Criteria

Table 2.3.1-2 specifies the inspections, tests, analyses, and associated acceptance criteria for the CCS.

Table 2.3.1-1

Equipment Name	Tag No.	Display	Control Function
CCS Pump A	CCS-MP-01A	Yes (Run Status)	Start
CCS Pump B	CCS-MP-01B	Yes (Run Status)	Start
CCS Discharge Header Flow Sensor	CCS-101	Yes	-
CCS to Normal Residual Heat Removal System Heat Exchanger (RNS HX) A Flow Sensor	CCS-301	Yes	-
CCS to RNS HX B Flow Sensor	CCS-302	Yes	-
CCS to Spent Fuel Pool Cooling System (SFS) HX A Flow Sensor	CCS-341	Yes	-
CCS to SFS HX B Flow Sensor	CCS-342	Yes	-
CCS Surge Tank Level Sensor A	CCS-130	Yes	-
CCS Surge Tank Level Sensor B	CCS-131	Yes	-
CCS Heat Exchanger Inlet Temperature Sensor	CCS-121	Yes	-
CCS Heat Exchanger Outlet Temperature Sensor	CCS-122	Yes	-
CCS Flow to Reactor Coolant Pump (RCP) 1A Valve (Position Indicator)	CCS-PL-V256A	Yes	-
CCS Flow to RCP 1B Valve (Position Indicator)	CCS-PL-V256B	Yes	-
CCS Flow to RCP 2A Valve (Position Indicator)	CCS-PL-V256C	Yes	-
CCS Flow to RCP 2B Valve (Position Indicator)	CCS-PL-V256D	Yes	-

Note: Dash (-) indicates not applicable.

Table 2.3.1-2
Inspections, Tests, Analyses, and Acceptance Criteria

Design Commitment	Inspections, Tests, Analyses	Acceptance Criteria
1. The functional arrangement of the CCS is as described in the Design Description of this Section 2.3.1.	Inspection of the as-built system will be performed.	The as-built CCS conforms with the functional arrangement described in the Design Description of this Section 2.3.1.
2. The CCS preserves containment integrity by isolation of the CCS lines penetrating the containment.	See Tier 1 Material, Table 2.2.1-3, items 1 and 7.	See Tier 1 Material, Table 2.2.1-3, items 1 and 7.
3. The CCS provides the nonsafety-related functions of transferring heat from the RNS during shutdown and the spent fuel pool cooling system during all modes of operation to the SWS.	i) Inspection will be performed for the existence of a report that determines the heat transfer capability of the CCS heat exchangers. ii) Testing will be performed to confirm that the CCS can provide cooling water to the RNS HXs while providing cooling water to the SFS HXs.	i) A report exists and concludes that the UA of each CCS heat exchanger is greater than or equal to 14.0 million Btu/hr-°F. ii) Each pump of the CCS can provide at least 2685 gpm of cooling water to one RNS HX and at least 1200 gpm of cooling water to one SFS HX while providing at least 4415 gpm to other users of cooling water.
4. Controls exist in the MCR to cause the pumps identified in Table 2.3.1-1 to perform the listed functions.	Testing will be performed to actuate the pumps identified in Table 2.3.1-1 using controls in the MCR.	Controls in the MCR operate to cause pumps listed in Table 2.3.1-1 to perform the listed functions.
5. Displays of the parameters identified in Table 2.3.1-1 can be retrieved in the MCR.	Inspection will be performed for retrievability of the parameters in the MCR.	Displays identified in Table 2.3.1-1 can be retrieved in the MCR.

Table 2.3.1-3

Component Name	Tag No.	Component Location
CCS Pump A	CCS-MP-01A	Turbine Building
CCS Pump B	CCS-MP-01B	Turbine Building
CCS Heat Exchanger A	CCS-ME-01A	Turbine Building
CCS Heat Exchanger B	CCS-ME-01B	Turbine Building

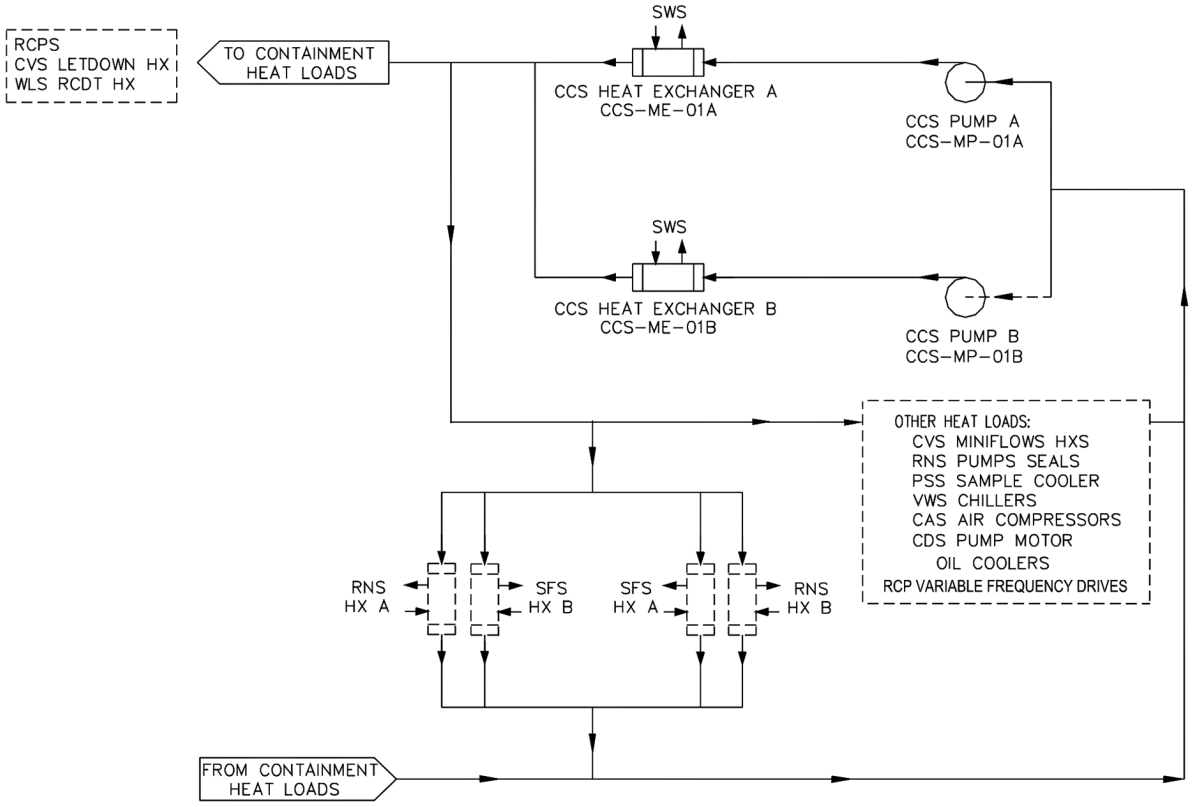

Figure 2.3.1-1
Component Cooling Water System

2.3.2 Chemical and Volume Control System

Design Description

The chemical and volume control system (CVS) provides reactor coolant system (RCS) purification, RCS inventory control and makeup, chemical shim and chemical control, oxygen control, and auxiliary pressurizer spray. The CVS performs these functions during normal modes of operation including power generation and shutdown.

The CVS is as shown in Figure 2.3.2-1 and the component locations of the CVS are as shown in Table 2.3.2-5.

1. The functional arrangement of the CVS is as described in the Design Description of this Section 2.3.2.

2. a) The components identified in Table 2.3.2-1 as ASME Code Section III are designed and constructed in accordance with ASME Code Section III requirements.

   b) The piping identified in Table 2.3.2-2 as ASME Code Section III is designed and constructed in accordance with ASME Code Section III requirements.

3. a) Pressure boundary welds in components identified in Table 2.3.2-1 as ASME Code Section III meet ASME Code Section III requirements.

   b) Pressure boundary welds in piping identified in Table 2.3.2-2 as ASME Code Section III meet ASME Code Section III requirements.

4. a) The components identified in Table 2.3.2-1 as ASME Code Section III retain their pressure boundary integrity at their design pressure.

   b) The piping identified in Table 2.3.2-2 as ASME Code Section III retains its pressure boundary integrity at its design pressure.

5. The seismic Category I equipment identified in Table 2.3.2-1 can withstand seismic design basis loads without loss of safety function.

6. a) The Class 1E equipment identified in Table 2.3.2-1 as being qualified for a harsh environment can withstand the environmental conditions that would exist before, during, and following a design basis accident without loss of safety function for the time required to perform the safety function.

   b) The Class 1E components identified in Table 2.3.2-1 are powered from their respective Class 1E division.

   c) Separation is provided between CVS Class 1E divisions, and between Class 1E divisions and non-Class 1E cable.

7. The CVS provides the following safety-related functions:

   a) The CVS preserves containment integrity by isolation of the CVS lines penetrating the containment.

   b) The CVS provides termination of an inadvertent RCS boron dilution by isolating demineralized water from the RCS.

   c) The CVS provides isolation of makeup to the RCS.

8. The CVS provides the following nonsafety-related functions:

   a) The CVS provides makeup water to the RCS.

   b) The CVS provides the pressurizer auxiliary spray.

9. Safety-related displays in Table 2.3.2-1 can be retrieved in the main control room (MCR).

10. a) Controls exist in the MCR to cause the remotely operated valves identified in Table 2.3.2-1 to perform active functions.

    b) The valves identified in Table 2.3.2-1 as having protection and safety monitoring system (PMS) control perform an active safety function after receiving a signal from the PMS.

11. a) The motor-operated and check valves identified in Table 2.3.2-1 perform an active safety-related function to change position as indicated in the table.

    b) After a loss of motive power, the remotely operated valves identified in Table 2.3.2-1 assume the indicated loss of motive power position.

12. a) Controls exist in the MCR to cause the pumps identified in Table 2.3.2-3 to perform the listed function.

    b) The pumps identified in Table 2.3.2-3 start after receiving a signal from the PLS.

13. Displays of the parameters identified in Table 2.3.2-3 can be retrieved in the MCR.

14. The nonsafety-related piping located inside containment and designated as reactor coolant pressure boundary, as identified in Table 2.3.2-2 (pipe lines with "No" in the ASME Code column), has been designed to withstand a seismic design basis event and maintain structural integrity.

Inspections, Tests, Analyses, and Acceptance Criteria

Table 2.3.2-4 specifies the inspections, tests, analyses, and associated acceptance criteria for the CVS.

Table 2.3.2-1

Equipment Name	Tag No.	ASME Code Section III	Seismic Cat. I	Remotely Operated Valve	Class 1E/ Qual. for Harsh Envir.	Safety-Related Display	Control PMS	Active Function	Loss of Motive Power Position
RCS Purification Motor-operated Isolation Valve	CVS-PL-V001	Yes	Yes	Yes	Yes/Yes	Yes (Valve Position)	Yes	Transfer Closed	As Is
RCS Purification Motor-operated Isolation Valve	CVS-PL-V002	Yes	Yes	Yes	Yes/Yes	Yes (Valve Position)	Yes	Transfer Closed	As Is
RCS Purification Motor-operated Isolation Valve	CVS-PL-V003	Yes	Yes	Yes	Yes/Yes	Yes (Valve Position)	Yes	Transfer Closed	As Is
CVS Resin Flush Line Containment Isolation Valve	CVS-PL-V040	Yes	Yes	No	- / -	-	-	-	-
CVS Resin Flush Line Containment Isolation Valve	CVS-PL-V041	Yes	Yes	No	- / -	-	-	-	-
CVS Demineralizer Resin Flush Line Containment Isolation Thermal Relief Valve	CVS-PL-V042	Yes	Yes	No	- / -	-	-	Transfer Open/ Transfer Closed	-
CVS Letdown Containment Isolation Valve	CVS-PL-V045	Yes	Yes	Yes	Yes/Yes	Yes (Valve Position)	Yes	Transfer Closed	Closed
CVS Letdown Containment Isolation Valve	CVS-PL-V047	Yes	Yes	Yes	Yes/No	Yes (Valve Position)	Yes	Transfer Closed	Closed

Note: Dash (-) indicates not applicable.

Table 2.3.2-1 (cont.)

Equipment Name	Tag No.	ASME Code Section III	Seismic Cat. I	Remotely Operated Valve	Class 1E/ Qual. for Harsh Envir.	Safety-Related Display	Control PMS	Active Function	Loss of Motive Power Position
CVS Letdown Line Containment Isolation Thermal Relief Valve	CVS-PL-V058	Yes	Yes	No	- / -	-	-	Transfer Open/ Transfer Closed	-
CVS Purification Return Line Pressure Boundary Check Valve	CVS-PL-V080	Yes	Yes	No	- / -	-	-	Transfer Closed	-
CVS Purification Return Line Pressure Boundary Isolation Check Valve	CVS-PL-V081	Yes	Yes	No	- / -	No	-	Transfer Closed	-
CVS Purification Return Line Pressure Boundary Check Valve	CVS-PL-V082	Yes	Yes	No	- / -	-	-	Transfer Closed	-
CVS Auxiliary Pressurizer Spray Line Pressure Boundary Valve	CVS-PL-V084	Yes	Yes	Yes	Yes/Yes	Yes (Valve Position)	Yes	Transfer Closed	Closed
CVS Auxiliary Pressurizer Spray Line Pressure Boundary Check Valve	CVS-PL-V085	Yes	Yes	No	Yes/Yes	-	-	Transfer Closed	-
CVS Makeup Line Containment Isolation Motor-operated Valve	CVS-PL-V090	Yes	Yes	Yes	Yes/No	Yes (Valve Position)	Yes	Transfer Closed	As Is

Note: Dash (-) indicates not applicable.

Table 2.3.2-1 (cont.)

Equipment Name	Tag No.	ASME Code Section III	Seismic Cat. I	Remotely Operated Valve	Class 1E/ Qual. for Harsh Envir.	Safety-Related Display	Control PMS	Active Function	Loss of Motive Power Position
CVS Makeup Line Containment Isolation Motor-operated Valve	CVS-PL-V091	Yes	Yes	Yes	Yes/Yes	Yes (Valve Position)	Yes	Transfer Closed	As Is
CVS Hydrogen Addition Line Containment Isolation Valve	CVS-PL-V092	Yes	Yes	Yes	Yes/No	Yes (Valve Position)	Yes	Transfer Closed	Closed
CVS Hydrogen Addition Line Containment Isolation Check Valve	CVS-PL-V094	Yes	Yes	No	- / -	-	-	Transfer Closed	-
CVS Makeup Line Containment Isolation Thermal Relief Valve	CVS-PL-V100	Yes	Yes	No	- / -	-	-	Transfer Open/ Transfer Closed	-
CVS Demineralized Water Isolation Valve	CVS-PL-V136A	Yes	Yes	Yes	Yes/No	Yes (Valve Position)	Yes	Transfer Closed	Closed
CVS Demineralized Water Isolation Valve	CVS-PL-V136B	Yes	Yes	Yes	Yes/No	Yes (Valve Position)	Yes	Transfer Closed	Closed

Note: Dash (-) indicates not applicable.

Table 2.3.2-2

Line Name	Line Number	ASME Code Section III
CVS Purification Line	L001 L040	Yes Yes
CVS Resin Flush Containment Penetration Line	L026	Yes
CVS Purification Line Return	L038	Yes
CVS Pressurizer Auxiliary Spray Connection	L070 L071	Yes Yes
CVS Letdown Containment Penetration Line	L051	Yes
CVS Makeup Containment Penetration Line	L053	Yes
CVS Hydrogen Addition Containment Penetration Line	L061	Yes
CVS Supply Line to Regenerative Heat Exchanger	L002	No
CVS Return Line from Regenerative Heat Exchanger	L018 L036 L073	No Yes No
CVS Line from Regenerative Heat Exchanger to Letdown Heat Exchanger	L003	No
CVS Lines from Letdown Heat Exchanger to Demin. Tanks	L004 L005 L072	No No No
CVS Lines from Demin Tanks to RC Filters and Connected Lines	L006(1) L007(1) L010(1) L011(1) L012 L015(1) L016(1) L020 L021 L022 L023(1) L024(1) L029 L037	No No No No No No No No No No No No No No

Table 2.3.2-2 (cont.)

Line Name	Line Number	ASME Code Section III
CVS Lines from RC Filters to Regenerative Heat Exchanger	L030 L031 L034 L050	No No No No
CVS Resin Fill Lines to Demin. Tanks	L008(1) L013(1) L025(1)	No No No

Note:

1. Special seismic requirements include only the portion of piping normally exposed to RCS pressure. Piping beyond the first normally closed isolation valve is evaluated as seismic Category II piping extending to either an interface anchor, a rigid support following a six-way anchor, or the last seismic support of a rigidly supported region of the piping system as necessary to satisfy analysis requirements for piping connected to seismic Category I piping systems.

Table 2.3.2-3

Equipment	Tag No.	Display	Control Function
CVS Makeup Pump A	CVS-MP-01A	Yes (Run Status)	Start
CVS Makeup Pump B	CVS-MP-01B	Yes (Run Status)	Start
Purification Flow Sensor	CVS-001	Yes	-
Purification Return Flow Sensor	CVS-025	Yes	-
CVS Purification Return Line (Position Indicator)	CVS-PL-V081	Yes	-
Auxiliary Spray Line Isolation Valve (Position Indicator)	CVS-PL-V084	Yes	-
Boric Acid Storage Tank Level Sensor	CVS-109	Yes	-
Boric Acid Flow Sensor	CVS-115	Yes	-
Makeup Blend Valve (Position Indicator)	CVS-PL-V115	Yes	-
CVS Demineralized Water Isolation Valve (Position Indicator)	CVS-PL-136A	Yes	-
CVS Demineralized Water Isolation Valve (Position Indicator)	CVS-PL-136B	Yes	-
Makeup Pump Discharge Flow Sensor	CVS-157	Yes	-
Makeup Flow Control Valve (Position Indicator)	CVS-PL-V157	Yes	-

Note: Dash (-) indicates not applicable.

Table 2.3.2-4
Inspections, Tests, Analyses, and Acceptance Criteria

Design Commitment	Inspections, Tests, Analyses	Acceptance Criteria
1. The functional arrangement of the CVS is as described in the Design Description of this Section 2.3.2.	Inspection of the as-built system will be performed.	The as-built CVS conforms with the functional arrangement as described in the Design Description of this Section 2.3.2.
2.a) The components identified in Table 2.3.2-1 as ASME Code Section III are designed and constructed in accordance with ASME Code Section III requirements.	Inspection will be conducted of the as-built components as documented in the ASME design reports.	The ASME Code Section III design reports exist for the as-built components identified in Table 2.3.2-1 as ASME Code Section III.
2.b) The piping identified in Table 2.3.2-2 as ASME Code Section III is designed and constructed in accordance with ASME Code Section III requirements.	Inspection will be conducted of the as-built piping as documented in the ASME design reports.	The ASME Code Section III design reports exist for the as-built piping identified in Table 2.3.2-2 as ASME Code Section III.
3.a) Pressure boundary welds in components identified in Table 2.3.2-1 as ASME Code Section III meet ASME Code Section III requirements.	Inspection of the as-built pressure boundary welds will be performed in accordance with the ASME Code Section III.	A report exists and concludes that the ASME Code Section III requirements are met for non-destructive examination of pressure boundary welds.
3.b) Pressure boundary welds in piping identified in Table 2.3.2-2 as ASME Code Section III meet ASME Code Section III requirements.	Inspection of the as-built pressure boundary welds will be performed in accordance with the ASME Code Section III.	A report exists and concludes that the ASME Code Section III requirements are met for non-destructive examination of pressure boundary welds.
4.a) The components identified in Table 2.3.2-1 as ASME Code Section III retain their pressure boundary integrity at their design pressure.	A hydrostatic test will be performed on the components required by the ASME Code Section III to be hydrostatically tested.	A report exists and concludes that the results of the hydrostatic test of the components identified in Table 2.3.2-1 as ASME Code Section III conform with the requirements of the ASME Code Section III.

Table 2.3.2-4 (cont.)
Inspections, Tests, Analyses, and Acceptance Criteria

Design Commitment	Inspections, Tests, Analyses	Acceptance Criteria
4.b) The piping identified in Table 2.3.2-2 as ASME Code Section III retains its pressure boundary integrity at its design pressure.	A hydrostatic test will be performed on the piping required by the ASME Code Section III to be hydrostatically tested.	A report exists and concludes that the results of the hydrostatic test of the piping identified in Table 2.3.2-2 as ASME Code Section III conform with the requirements of the ASME Code Section III.
5. The seismic Category I equipment identified in Table 2.3.2-1 can withstand seismic design basis loads without loss of safety function.	i) Inspection will be performed to verify that the seismic Category I equipment identified in Table 2.3.2-1 is located on the Nuclear Island. ii) Type tests, analyses, or a combination of type tests and analyses of seismic Category I equipment will be performed. iii) Inspection will be performed for the existence of a report verifying that the as-built equipment including anchorage is seismically bounded by the tested or analyzed conditions.	i) The seismic Category I equipment identified in Table 2.3.2-1 is located on the Nuclear Island. ii) A report exists and concludes that the seismic Category I equipment can withstand seismic design basis dynamic loads without loss of safety function. iii) A report exists and concludes that the as-built equipment including anchorage is seismically bounded by the tested or analyzed conditions.
6.a) The Class 1E equipment identified in Table 2.3.2-1 as being qualified for a harsh environment can withstand the environmental conditions that would exist before, during, and following a design basis accident without loss of safety function for the time required to perform the safety function.	i) Type tests, analyses, or a combination of type tests and analyses will be performed on Class 1E equipment located in a harsh environment. ii) Inspection will be performed of the as-built Class 1E equipment and the associated wiring, cables, and terminations located in a harsh environment.	i) A report exists and concludes that the Class 1E equipment identified in Table 2.3.2-1 as being qualified for a harsh environment can withstand the environmental conditions that would exist before, during, and following a design basis accident without loss of safety function for the time required to perform the safety function. ii) A report exists and concludes that the as-built Class 1E equipment and the associated wiring, cables, and terminations identified in Table 2.3.2-1 as being qualified for a harsh environment are bounded by type tests, analyses, or a combination of type tests and analyses.

Table 2.3.2-4 (cont.)
Inspections, Tests, Analyses, and Acceptance Criteria

Design Commitment	Inspections, Tests, Analyses	Acceptance Criteria
6.b) The Class 1E components identified in Table 2.3.2-1 are powered from their respective Class 1E division.	Testing will be performed on the CVS by providing a simulated test signal in each Class 1E division.	A simulated test signal exists at the Class 1E equipment identified in Table 2.3.2-1 when the assigned Class 1E division is provided the test signal.
6.c) Separation is provided between CVS Class 1E divisions, and between Class 1E divisions and non-Class 1E cable.	See Tier 1 Material, Table 3.3-6, item 7.d.	See Tier 1 Material, Table 3.3-6, item 7.d.
7.a) The CVS preserves containment integrity by isolation of the CVS lines penetrating the containment.	See Tier 1 Material, Table 2.2.1-3, item 7.	See Tier 1 Material, Table 2.2.1-3, item 7.
7.b) The CVS provides termination of an inadvertent RCS boron dilution by isolating demineralized water from the RCS.	See item 10b in this table.	See item 10b in this table.
7.c) The CVS provides isolation of makeup to the RCS.	See item 10b in this table.	See item 10b in this table.
8.a) The CVS provides makeup water to the RCS.	i) Testing will be performed by aligning a flow path from each CVS makeup pump, actuating makeup flow to the RCS at pressure greater than or equal to 2000 psia, and measuring the flow rate in the makeup pump discharge line with each pump suction aligned to the boric acid storage tank. ii) Inspection of the boric acid storage tank volume will be performed. iii) Testing will be performed to measure the delivery rate from the DWS to the RCS. Both CVS makeup pumps will be operating and the RCS pressure will be below 6 psig.	i) Each CVS makeup pump provides a flow rate of greater than or equal to 100 gpm. ii) The volume in the boric acid storage tank is at least 70,000 gallons between the tank outlet connection and the tank overflow. iii) The total CVS makeup flow to the RCS is less than or equal to 200 gpm.

Table 2.3.2-4 (cont.)
Inspections, Tests, Analyses, and Acceptance Criteria

Design Commitment	Inspections, Tests, Analyses	Acceptance Criteria
8.b) The CVS provides the pressurizer auxiliary spray.	Testing will be performed by aligning a flow path from each CVS makeup pump to the pressurizer auxiliary spray and measuring the flow rate in the makeup pump discharge line with each pump suction aligned to the boric acid storage tank and with RCS pressure greater than or equal to 2000 psia.	Each CVS makeup pump provides spray flow to the pressurizer.
9. Safety-related displays identified in Table 2.3.2-1 can be retrieved in the MCR.	Inspection will be performed for retrievability of the safety-related displays in the MCR.	Safety-related displays identified in Table 2.3.2-1 can be retrieved in the MCR.
10.a) Controls exist in the MCR to cause the remotely operated valves identified in Table 2.3.2-1 to perform active functions.	Stroke testing will be performed on the remotely operated valves identified in Table 2.3.2-1 using the controls in the MCR.	Controls in the MCR operate to cause the remotely operated valves identified in Table 2.3.2-1 to perform active functions.
10.b) The valves identified in Table 2.3.2-1 as having PMS control perform an active safety function after receiving a signal from the PMS.	i) Testing will be performed using real or simulated signals into the PMS. ii) Testing will be performed to demonstrate that the remotely operated CVS isolation valves CVS-V090, V091, V136A/B close within the required response time.	i) The valves identified in Table 2.3.2-1 as having PMS control perform the active function identified in the table after receiving a signal from the PMS. ii) These valves close within the following times after receipt of an actuation signal: V090, V091 < 30 sec V136A/B < 20 sec
11.a) The motor-operated and check valves identified in Table 2.3.2-1 perform an active safety-related function to change position as indicated in the table.	i) Tests or type tests of motor-operated valves will be performed that demonstrate the capability of the valve to operate under its design conditions. ii) Inspection will be performed for the existence of a report verifying that the as-built motor-operated valves are bounded by the tested conditions.	i) A test report exists and concludes that each motor-operated valve changes position as indicated in Table 2.3.2-1 under design conditions. ii) A report exists and concludes that the as-built motor-operated valves are bounded by the tests or type tests.

Table 2.3.2-4 (cont.)
Inspections, Tests, Analyses, and Acceptance Criteria

Design Commitment	Inspections, Tests, Analyses	Acceptance Criteria
	iii) Tests of the motor-operated valves will be performed under pre-operational flow, differential pressure, and temperature conditions. iv) Exercise testing of the check valves with active safety functions identified in Table 2.3.2-1 will be performed under pre-operational test pressure, temperature and fluid flow conditions.	iii) Each motor-operated valve changes position as indicated in Table 2.3.2-1 under pre-operational test conditions. iv) Each check valve changes position as indicated in Table 2.3.2-1.
11.b) After loss of motive power, the remotely operated valves identified in Table 2.3.2-1 assume the indicated loss of motive power position.	Testing of the remotely operated valves will be performed under the conditions of loss of motive power.	Upon loss of motive power, each remotely operated valve identified in Table 2.3.2-1 assumes the indicated loss of motive power position.
12.a) Controls exist in the MCR to cause the pumps identified in Table 2.3.2-3 to perform the listed function.	Testing will be performed to actuate the pumps identified in Table 2.3.2-3 using controls in the MCR.	Controls in the MCR cause pumps identified in Table 2.3.2-3 to perform the listed function.
12.b) The pumps identified in Table 2.3.2-3 start after receiving a signal from the PLS.	Testing will be performed to confirm starting of the pumps identified in Table 2.3.2-3.	The pumps identified in Table 2.3.2-3 start after a signal is generated by the PLS.
13. Displays of the parameters identified in Table 2.3.2-3 can be retrieved in the MCR.	Inspection will be performed for retrievability of the displays identified in Table 2.3.2-3 in the MCR.	Displays identified in Table 2.3.2-3 can be retrieved in the MCR.
14. The nonsafety-related piping located inside containment and designated as reactor coolant pressure boundary, as identified in Table 2.3.2-2, has been designed to withstand a seismic design basis event and maintain structural integrity.	Inspection will be conducted of the as-built components as documented in the CVS Seismic Analysis Report.	The CVS Seismic Analysis Reports exist for the non-safety related piping located inside containment and designated as reactor coolant pressure boundary as identified in Table 2.3.2-2.

Table 2.3.2-5

Component Name	Tag No.	Component Location
CVS Makeup Pump A	CVS-MP-01A	Auxiliary Building
CVS Makeup Pump B	CVS-MP-01B	Auxiliary Building
Boric Acid Storage Tank	CVS-MT-01	Yard
Regenerative Heat Exchanger	CVS-ME-01	Containment
Letdown Heat Exchanger	CVS-ME-02	Containment
Mixed Bed Demineralizer A	CVS-MV-01A	Containment
Mixed Bed Demineralizer B	CVS-MV-01B	Containment
Cation Bed Demineralizer	CVS-MV-02	Containment
Reactor Coolant Filter A	CVS-MV-03A	Containment
Reactor Coolant Filter B	CVS-MV-03B	Containment

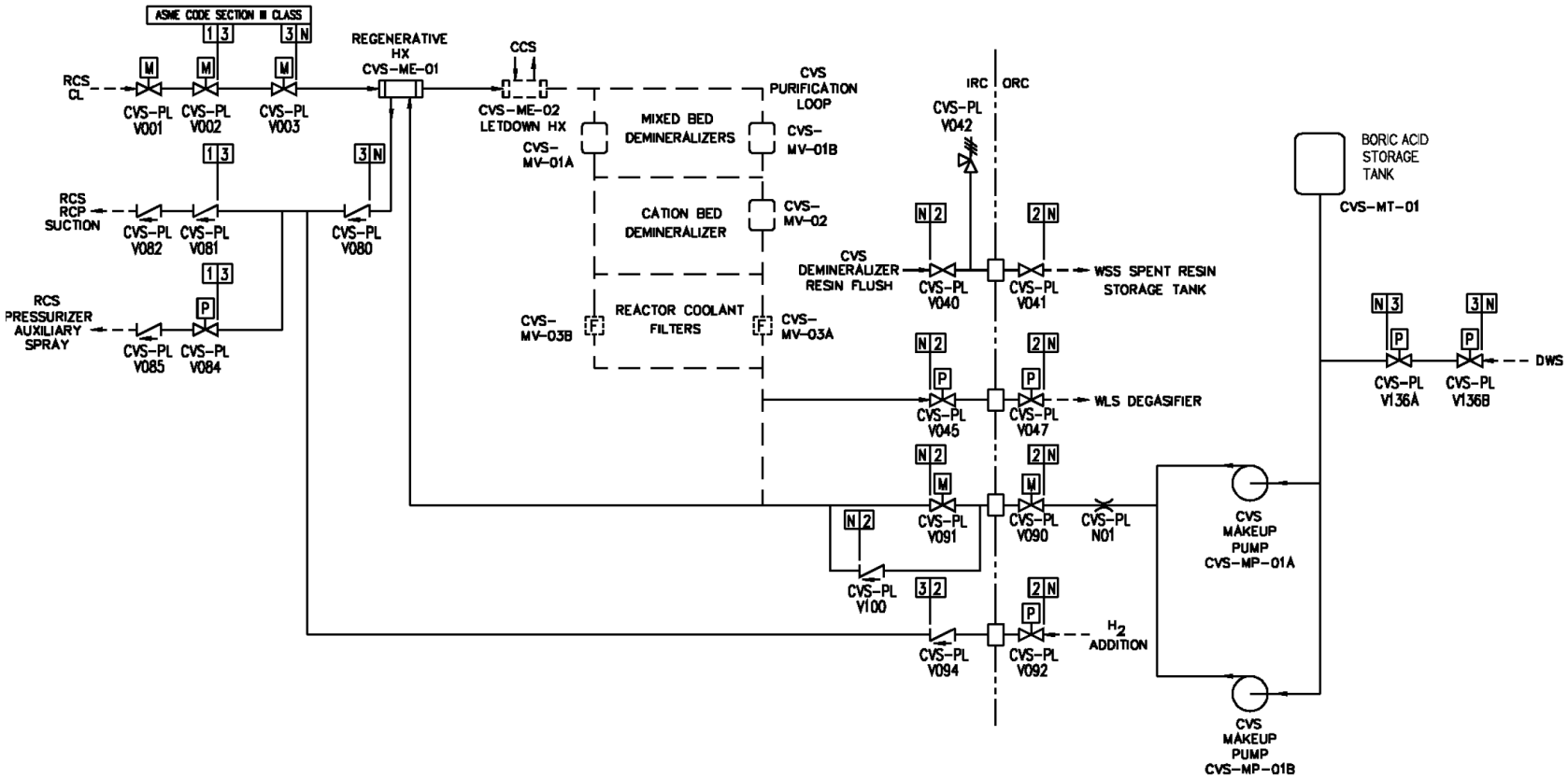

Figure 2.3.2-1
Chemical and Volume Control System

2.3.3 Standby Diesel Fuel Oil System

Design Description

The standby diesel fuel oil system (DOS) supplies diesel fuel oil for the onsite standby power system. The diesel fuel oil is supplied by two above-ground fuel oil storage tanks. The DOS also provides fuel oil for the ancillary diesel generators. A single fuel oil storage tank services both ancillary diesel generators.

The DOS is as shown in Figure 2.3.3-1 and the component locations of the DOS are as shown in Table 2.3.3-3.

1. The functional arrangement of the DOS is as described in the Design Description of this Section 2.3.3.

2. The ancillary diesel generator fuel tank can withstand a seismic event.

3. The DOS provides the following nonsafety-related functions:

   a) Each fuel oil storage tank provides for at least 7 days of continuous operation of the associated standby diesel generator.

   b) Each fuel oil day tank provides for at least four hours of continuous operation of the associated standby diesel engine generator.

   c) The fuel oil flow rate to the day tank of each standby diesel generator provides for continuous operation of the associated diesel generator.

   d) The ancillary diesel generator fuel tank is sized to supply power to long-term safety-related post-accident monitoring loads and control room lighting through a regulating transformer and one PCS recirculation pump for a period of 4 days.

4. Controls exist in the main control room (MCR) to cause the components identified in Table 2.3.3-1 to perform the listed function.

5. Displays of the parameters identified in Table 2.3.3-1 can be retrieved in the MCR.

Inspections, Tests, Analyses, and Acceptance Criteria

Table 2.3.3-2 specifies the inspections, tests, analyses, and associated acceptance criteria for the DOS.

Table 2.3.3-1

Equipment Name	Tag No.	Display	Control Function
Diesel Fuel Oil Pump 1A (Motor)	DOS-MP-01A	Yes (Run Status)	Start
Diesel Fuel Oil Pump 1B (Motor)	DOS-MP-01B	Yes (Run Status)	Start
Diesel Generator Fuel Oil Day Tank A Level	DOS-016A	Yes	-
Diesel Generator Fuel Oil Day Tank B Level	DOS-016B	Yes	-

Note: Dash (-) indicates not applicable.

Table 2.3.3-2
Inspections, Tests, Analyses, and Acceptance Criteria

Design Commitment	Inspections, Tests, Analyses	Acceptance Criteria
1. The functional arrangement of the DOS is as described in the Design Description of this Section 2.3.3.	Inspection of the as-built system will be performed.	The as-built DOS conforms with the functional arrangement described in the Design Description of this Section 2.3.3.
2. The ancillary diesel generator fuel tank can withstand a seismic event.	Inspection will be performed for the existence of a report verifying that the as-built ancillary diesel generator fuel tank and its anchorage are designed using seismic Category II methods and criteria.	A report exists and concludes that the as-built ancillary diesel generator fuel tank and its anchorage are designed using seismic Category II methods and criteria.
3.a) Each fuel oil storage tank provides for at least 7 days of continuous operation of the associated standby diesel generator.	Inspection of each fuel oil storage tank will be performed.	The volume of each fuel oil storage tank available to the standby diesel generator is greater than or equal to 55,000 gallons.
3.b) Each fuel oil storage day tank provides for at least 4 hours of operation of the associated standby diesel generator.	Inspection of the fuel oil day tank will be performed.	The volume of each fuel oil day tank is greater than or equal to 1300 gallons.
3.c) The fuel oil flow rate to the day tank of each standby diesel generator provides for continuous operation of the associated diesel generator.	Testing will be performed to determine the flow rate.	The flow rate delivered to each day tank is 8 gpm or greater.
3.d) The ancillary diesel generator fuel tank is sized to supply power to long-term safety-related post accident monitoring loads and control room lighting through a regulating transformer and one PCS recirculation pump for four days.	Inspection of the ancillary diesel generator fuel tank will be performed.	The volume of the ancillary diesel generator fuel tank is greater than or equal to 650 gallons.
4. Controls exist in the MCR to cause the components identified in Table 2.3.3-1 to perform the listed function.	Testing will be performed on the components in Table 2.3.3-1 using controls in the MCR.	Controls in the MCR operate to cause the components listed in Table 2.3.3-1 to perform the listed functions.
5. Displays of the parameters identified in Table 2.3.3-1 can be retrieved in the MCR.	Inspection will be performed for retrievability of parameters in the MCR.	The displays identified in Table 2.3.3-1 can be retrieved in the MCR.

Table 2.3.3-3

Component Name	Tag No.	Component Location
Diesel Oil Transfer Package A	DOS-MS-01A	Yard
Diesel Oil Transfer Package B	DOS-MS-01B	Yard
Fuel Oil Storage Tank A	DOS-MT-01A	Yard
Fuel Oil Storage Tank B	DOS-MT-01B	Yard
Diesel Generator A Fuel Oil Day Tank	DOS-MT-02A	Diesel Building
Diesel Generator B Fuel Oil Day Tank	DOS-MT-02B	Diesel Building
Ancillary Diesel Fuel Oil Storage Tank	DOS-MT-03	Annex Building

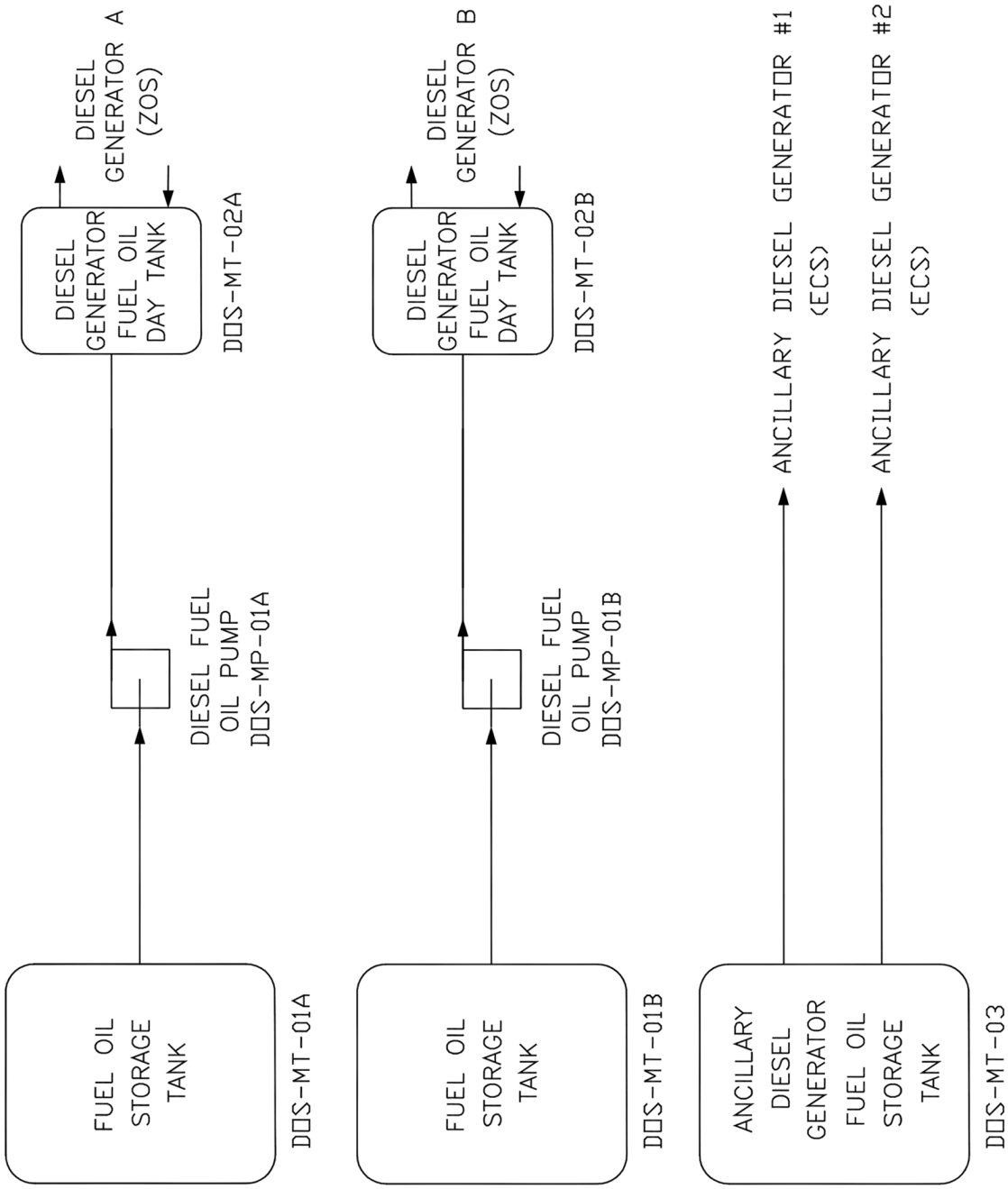

Figure 2.3.3-1
Standby Diesel Fuel Oil System

2.3.4 Fire Protection System

Design Description

The fire protection system (FPS) detects and suppresses fires in the plant. The FPS consists of water distribution systems, automatic and manual suppression systems, a fire detection and alarm system, and portable fire extinguishers. The FPS provides fire protection for the nuclear island, the annex building, the turbine building, the radwaste building and the diesel generator building.

The FPS is as shown in Figure 2.3.4-1 and the component locations of the FPS are as shown in Table 2.3.4-3.

1. The functional arrangement of the FPS is as described in the Design Description of this Section 2.3.4.

2. The FPS piping identified in Table 2.3.4-4 remains functional following a safe shutdown earthquake.

3. The FPS provides the safety-related function of preserving containment integrity by isolation of the FPS line penetrating the containment.

4. The FPS provides for manual fire fighting capability in plant areas containing safety-related equipment.

5. Displays of the parameters identified in Table 2.3.4-1 can be retrieved in the main control room (MCR).

6. The FPS provides nonsafety-related containment spray for severe accident management.

7. The FPS provides two fire water storage tanks, each capable of holding at least 300,000 gallons of water.

8. Two FPS fire pumps provide at least 2000 gpm each at a total head of at least 300 ft.

9. The fuel tank for the diesel-driven fire pump is capable of holding at least 240 gallons.

10. Individual fire detectors provide fire detection capability and can be used to initiate fire alarms in areas containing safety-related equipment.

11. The FPS seismic standpipe subsystem can be supplied from the FPS fire main by opening the normally closed cross-connect valve to the FPS plant fire main.

Inspections, Tests, Analyses, and Acceptance Criteria

Table 2.3.4-2 specifies the inspections, tests, analyses, and associated acceptance criteria for the FPS.

Table 2.3.4-1

Equipment Name	Tag No.	Display	Control Function
Motor-driven Fire Pump	FPS-MP-01A	Yes (Run Status)	Start
Diesel-driven Fire Pump	FPS-MP-01B	Yes (Run Status)	Start
Jockey Pump	FPS-MP-02	Yes (Run Status)	Start

Table 2.3.4-2
Inspections, Tests, Analyses, and Acceptance Criteria

Design Commitment	Inspections, Tests, Analyses	Acceptance Criteria
1. The functional arrangement of the FPS is as described in the Design Description of this Section 2.3.4.	Inspection of the as-built system will be performed.	The as-built FPS conforms with the functional arrangement described in the Design Description of this Section 2.3.4.
2. The FPS piping identified in Table 2.3.4-4 remains functional following a safe shutdown earthquake.	i) Inspection will be performed to verify that the piping identified in Table 2.3.4-4 is located on the Nuclear Island. ii) A reconciliation analysis using the as-designed and as-built piping information will be performed, or an analysis of the as-built piping will be performed.	i) The piping identified in Table 2.3.4-4 is located on the Nuclear Island. ii) The as-built piping stress report exists and concludes that the piping remains functional following a safe shutdown earthquake.
3. The FPS provides the safety-related function of preserving containment integrity by isolation of the FPS line penetrating the containment.	See Tier 1 Material, Table 2.2.1-3, items 1 and 7.	See Tier 1 Material, Table 2.2.1-3, items 1 and 7.
4. The FPS provides for manual fire fighting capability in plant areas containing safety-related equipment.	i) Inspection of the passive containment cooling system (PCS) storage tank will be performed. ii) Testing will be performed by measuring the water flow rate as it is simultaneously discharged from the two highest fire-hose stations and when the water for the fire is supplied from the PCS storage tank.	i) The volume of the PCS tank above the standpipe feeding the FPS and below the overflow is at least 18,000 gal. ii) Water is simultaneously discharged from each of the two highest fire-hose stations in plant areas containing safety-related equipment at not less than 75 gpm.

Table 2.3.4-2 (cont.)
Inspections, Tests, Analyses, and Acceptance Criteria

Design Commitment	Inspections, Tests, Analyses	Acceptance Criteria
5. Displays of the parameters identified in Table 2.3.4-1 can be retrieved in the MCR.	Inspection will be performed for retrievability of the parameters in the MCR.	The displays identified in Table 2.3.4-1 can be retrieved in the MCR.
6. The FPS provides nonsafety-related containment spray for severe accident management.	Inspection of the containment spray headers will be performed.	The FPS has spray headers and nozzles as follows: At least 44 nozzles at plant elevation of at least 260 feet, and 24 nozzles at plant elevation of at least 275 feet.
7. The FPS provides two fire water storage tanks, each capable of holding at least 300,000 gallons of water.	Inspection of each fire water storage tank will be performed.	The volume of each fire water storage tank supplying the FPS is at least 300,000 gallons.
8. Two FPS fire pumps provide at least 2000 gpm each at a total head of at least 300 ft.	Testing and/or analysis of each fire pump will be performed.	The tests and/or analysis concludes that each fire pump provides a flow rate of at least 2000 gpm at a total head of at least 300 ft.
9. The fuel tank for the diesel-driven fire pump is capable of holding at least 240 gallons.	Inspection of the diesel-driven fire pump fuel tank will be performed.	The volume of the diesel driven fire pump fuel tank is at least 240 gallons.
10. Individual fire detectors provide fire detection capability and can be used to initiate fire alarms in areas containing safety-related equipment.	Testing will be performed on the as-built individual fire detectors in the fire areas identified in Tier 1 Material, subsection 3.3, Table 3.3-3. (Individual fire detectors will be tested using simulated fire conditions.)	The tested individual fire detectors respond to simulated fire conditions.
11. The FPS seismic standpipe subsystem can be supplied from the FPS fire main by opening the normally closed cross-connect valve to the FPS plant fire main.	Inspection for the existence of a cross-connect valve from the FPS seismic standpipe subsystem to FPS plant fire main will be performed.	Valve FPS-PL-V101 exists and can connect the FPS seismic standpipe subsystem to the FPS plant fire main.

Table 2.3.4-3

Component Name	Tag No.	Location
Motor-driven Fire Pump	FPS-MP-01A	Turbine Building
Diesel-driven Fire Pump	FPS-MP-01B	Yard
Jockey Pump	FPS-MP-02	Turbine Building
Primary Fire Water Tank	FPS-MT-01A	Yard
Secondary Fire Water/Clearwell Storage Tank	FPS-MT-01B	Yard
Fire Pump Diesel Fuel Day Tank	FPS-MT-02	Yard

Table 2.3.4-4
FPS Piping Which Must Remain Functional Following a Safe Shutdown Earthquake

L049	L114	L142	L188
L090A	L115	L143	L189
L090B	L116	L144	L190
L091A	L117	L145	L191
L091B	L118	L146	L192
L091C	L119	L147	L193
L092A	L120	L148	L194
L092B	L121	L149	L195
L092C	L122	L150	L196
L093	L123	L151	L197
L094	L124	L152	L198
L095	L125	L153	L199
L096	L126	L154	L301
L102	L127	L155	L701
L103	L128	L156	L702
L105	L129	L159	L703
L106	L130	L180	L704
L107	L131	L181	L705
L108	L132	L182	L706
L109	L133A	L183	L707
L110	L133B	L184	L708
L111	L133C	L185	L709
L112	L140	L186	
L113	L141	L187	

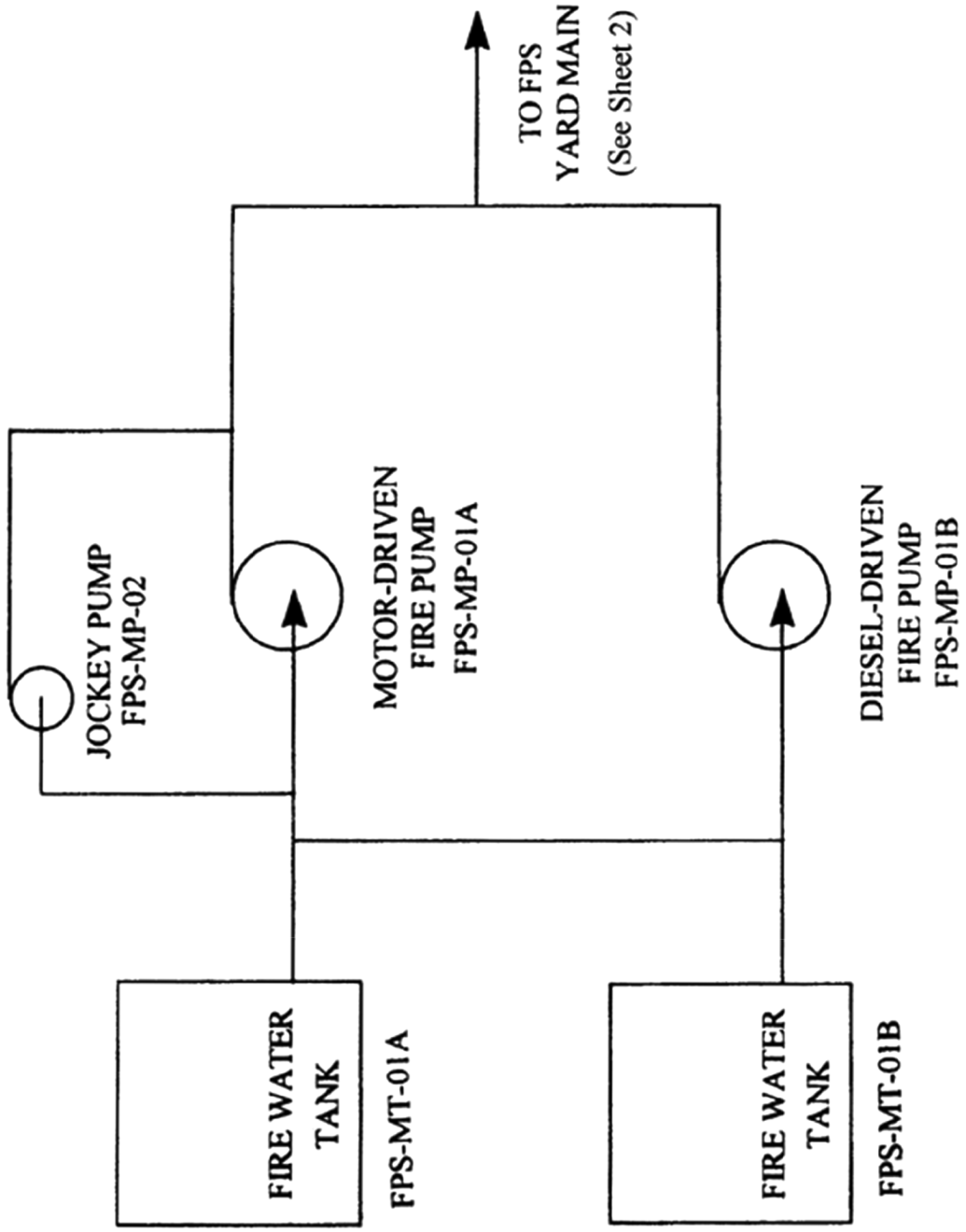

Figure 2.3.4-1 (Sheet 1 of 2)
Fire Protection System

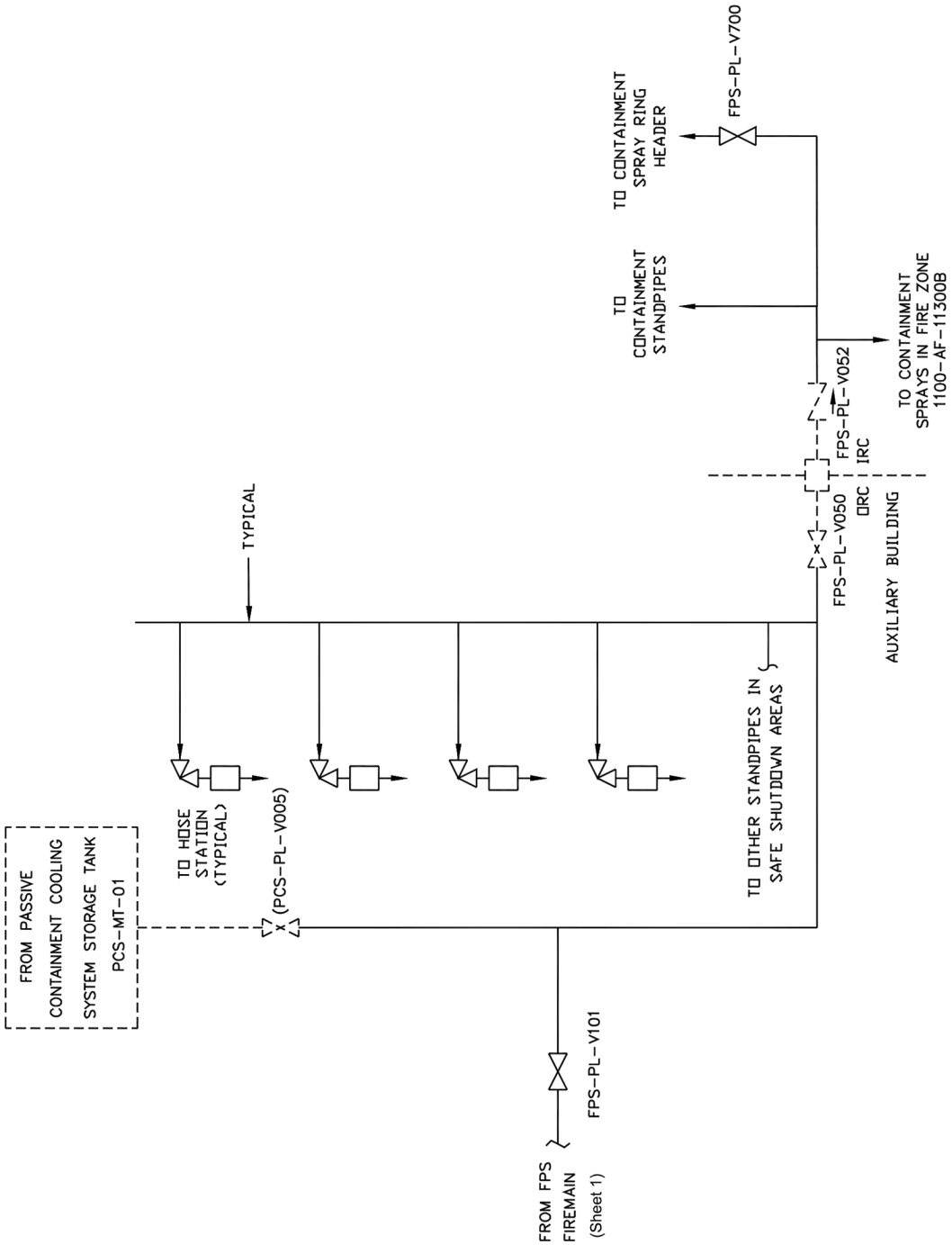

Figure 2.3.4-1 (Sheet 2 of 2)
Fire Protection System

2.3.5 Mechanical Handling System

Design Description

The mechanical handling system (MHS) provides for lifting heavy loads. The MHS equipment can be operated during shutdown and refueling.

The component locations of the MHS are as shown in Table 2.3.5-3.

1. The functional arrangement of the MHS is as described in the Design Description of this Section 2.3.5.

2. The seismic Category I equipment identified in Table 2.3.5-1 can withstand seismic design basis loads without loss of safety function.

3. The MHS components listed below are single failure proof:

   a) Polar crane
   b) Cask handling crane
   c) Equipment hatch hoist
   d) Maintenance hatch hoist

4. The cask handling crane cannot move over the spent fuel pool.

Inspections, Tests, Analyses, and Acceptance Criteria

Table 2.3.5-2 specifies the inspections, tests, analyses, and associated acceptance criteria for the MHS.

Table 2.3.5-1

Equipment Name	Tag No.	Seismic Cat. I	Class 1E/ Qual. for Harsh Envir.	Safety Function
Containment Polar Crane	MHS-MH-01	Yes	No/No	Avoid uncontrolled lowering of heavy load.
Cask Handling Crane	MHS-MH-02	Yes	No/No	Avoid uncontrolled lowering of heavy load.
Equipment Hatch Hoist	MHS-MH-05	Yes	No/No	Avoid uncontrolled lowering of heavy load.
Maintenance Hatch Hoist	MHS-MH-06	Yes	No/No	Avoid uncontrolled lowering of heavy load.

Table 2.3.5-2
Inspections, Tests, Analyses, and Acceptance Criteria

Design Commitment	Inspections, Tests, Analyses	Acceptance Criteria
1. The functional arrangement of the MHS is as described in the Design Description of this Section 2.3.5.	Inspection of the as-built system will be performed.	The as-built MHS conforms with the functional arrangement as described in the Design Description of this Section 2.3.5.
2. The seismic Category I equipment identified in Table 2.3.5-1 can withstand seismic design basis loads without loss of safety function.	i) Inspection will be performed to verify that the seismic Category I equipment identified in Table 2.3.5-1 is located on the Nuclear Island.	i) The seismic Category I equipment identified in Table 2.3.5-1 is located on the Nuclear Island.
	ii) Type tests, analyses, or a combination of type tests and analyses of seismic Category I equipment will be performed.	ii) A report exists and concludes that the seismic Category I equipment can withstand seismic design basis loads without loss of safety function.
	iii) Inspection will be performed for the existence of a report verifying that the as-built equipment including anchorage is seismically bounded by the tested or analyzed conditions.	iii) A report exists and concludes that the as-built equipment including anchorage is seismically bounded by the tested or analyzed conditions.
3.a) The polar crane is single failure proof.	i) Validation of double design factors is provided for hooks where used as load bearing components. Validation of redundant factors is provided for load bearing components such as: • Hoisting ropes • Sheaves • Equalizer assembly • Holding brakes	i) A report exists and concludes that the polar crane is single failure proof. A certificate of conformance from the vendor exists and concludes that the polar crane is single failure proof.
	ii) Testing of the polar crane is performed.	ii) The polar crane shall be static-load tested to 125% of the rated load.
	iii) Testing of the polar crane is performed.	iii) The polar crane shall lift a test load that is 100% of the rated load. Then it shall lower, stop, and hold the test load.

Table 2.3.5-2 (cont.)
Inspections, Tests, Analyses, and Acceptance Criteria

Design Commitment	Inspections, Tests, Analyses	Acceptance Criteria
3.b) The cask handling crane is single failure proof.	i) Validation of double design factors is provided for hooks where used as load bearing components. Validation of redundant factors is provided for load bearing components such as: • Hoisting ropes • Sheaves • Equalizer assembly • Holding brakes	i) A report exists and concludes that the cask handling crane is single failure proof. A certificate of conformance from the vendor exists and concludes that the cask handling crane is single failure proof.
	ii) Testing of the cask handling crane is performed.	ii) The cask handling crane shall be static load tested to 125% of the rated load.
	iii) Testing of the cask handling crane is performed.	iii) The cask handling crane shall lift a test load that is 100% of the rated load. Then it shall lower, stop, and hold the test load.
3.c) The equipment hatch hoist is single failure proof.	i) Validation of double design factors is provided for hooks where used as load bearing components. Validation of redundant factors is provided for load bearing components such as: • Hoisting ropes • Sheaves • Equalizer assembly • Holding brakes	i) A report exists and concludes that the equipment hatch hoist is single failure proof. A certificate of conformance from the vendor exists and concludes that the equipment hatch hoist is single failure proof.
	ii) Testing of the equipment hatch hoist is performed.	ii) The equipment hatch hoist holding mechanism shall stop and hold the hatch.

Table 2.3.5-2 (cont.)
Inspections, Tests, Analyses, and Acceptance Criteria

Design Commitment	Inspections, Tests, Analyses	Acceptance Criteria
3.d) The maintenance hatch hoist is single failure proof.	i) Validation of double design factors is provided for hooks where used as load bearing components. Validation of redundant factors is provided for load bearing components such as: • Hoisting ropes • Sheaves • Equalizer assembly • Holding brakes ii) Testing of the maintenance hatch hoist is performed.	i) A report exists and concludes that the maintenance hatch hoist is single failure proof. A certificate of conformance from the vendor exists and concludes that the maintenance hatch hoist is single failure proof. ii) The maintenance hatch hoist holding mechanism shall stop and hold the hatch.
4. The cask handling crane cannot move over the spent fuel pool.	Testing of the cask handling crane is performed.	The cask handling crane does not move over the spent fuel pool.

Table 2.3.5-3

Component Name	Tag No.	Component Location
Containment Polar Crane	MHS-MH-01	Containment
Cask Handling Crane	MHS-MH-02	Auxiliary Building
Equipment Hatch Hoist	MHS-MH-05	Containment
Maintenance Hatch Hoist	MHS-MH-06	Containment

2.3.6 Normal Residual Heat Removal System

Design Description

The normal residual heat removal system (RNS) removes heat from the core and reactor coolant system (RCS) and provides RCS low temperature over-pressure (LTOP) protection at reduced RCS pressure and temperature conditions after shutdown. The RNS also provides a means for cooling the in-containment refueling water storage tank (IRWST) during normal plant operation.

The RNS is as shown in Figure 2.3.6-1 and the RNS component locations are as shown in Table 2.3.6-5.

1. The functional arrangement of the RNS is as described in the Design Description of this Section 2.3.6.

2. a) The components identified in Table 2.3.6-1 as ASME Code Section III are designed and constructed in accordance with ASME Code Section III requirements.

   b) The piping identified in Table 2.3.6-2 as ASME Code Section III is designed and constructed in accordance with ASME Code Section III requirements.

3. a) Pressure boundary welds in components identified in Table 2.3.6-1 as ASME Code Section III meet ASME Code Section III requirements.

   b) Pressure boundary welds in piping identified in Table 2.3.6-2 as ASME Code Section III meet ASME Code Section III requirements.

4. a) The components identified in Table 2.3.6-1 as ASME Code Section III retain their pressure boundary integrity at their design pressure.

   b) The piping identified in Table 2.3.6-2 as ASME Code Section III retains its pressure boundary integrity at its design pressure.

5. a) The seismic Category I equipment identified in Table 2.3.6-1 can withstand seismic design basis loads without loss of safety function.

   b) Each of the lines identified in Table 2.3.6-2 for which functional capability is required is designed to withstand combined normal and seismic design basis loads without a loss of its functional capability.

6. Each of the as-built lines identified in Table 2.3.6-2 as designed for leak before break (LBB) meets the LBB criteria, or an evaluation is performed of the protection from the dynamic effects of a rupture of the line.

7. a) The Class 1E equipment identified in Table 2.3.6-1 as being qualified for a harsh environment can withstand the environmental conditions that would exist before, during, and following a design basis accident without loss of safety function for the time required to perform the safety function.

   b) The Class 1E components identified in Table 2.3.6-1 are powered from their respective Class 1E division.

c) Separation is provided between RNS Class 1E divisions, and between Class 1E divisions and non-Class 1E cable.

8. The RNS provides the following safety-related functions:

   a) The RNS preserves containment integrity by isolation of the RNS lines penetrating the containment.

   b) The RNS provides a flow path for long-term, post-accident makeup to the RCS.

9. The RNS provides the following nonsafety-related functions:

   a) The RNS provides low temperature overpressure protection (LTOP) for the RCS during shutdown operations.

   b) The RNS provides heat removal from the reactor coolant during shutdown operations.

   c) The RNS provides low pressure makeup flow from the SFS cask loading pit to the RCS for scenarios following actuation of the automatic depressurization system (ADS).

   d) The RNS provides heat removal from the in-containment refueling water storage tank.

10. Safety-related displays identified in Table 2.3.6-1 can be retrieved in the main control room (MCR).

11. a) Controls exist in the MCR to cause those remotely operated valves identified in Table 2.3.6-1 to perform active functions.

    b) The valves identified in Table 2.3.6-1 as having protection and safety monitoring system (PMS) control perform active safety functions after receiving a signal from the PMS.

12. a) The motor-operated and check valves identified in Table 2.3.6-1 perform an active safety-related function to change position as indicated in the table.

    b) After loss of motive power, the remotely operated valves identified in Table 2.3.6-1 assume the indicated loss of motive power position.

13. Controls exist in the MCR to cause the pumps identified in Table 2.3.6-3 to perform the listed function.

14. Displays of the RNS parameters identified in Table 2.3.6-3 can be retrieved in the MCR.

Inspections, Tests, Analyses, and Acceptance Criteria

Table 2.3.6-4 specifies the inspections, tests, analyses, and associated acceptance criteria for the RNS.

Table 2.3.6-1

Equipment Name	Tag No.	ASME Code Section III	Seismic Cat. I	Remotely Operated Valve	Class 1E/ Qual. for Harsh Envir.	Safety-Related Display	Control PMS	Active Function	Loss of Motive Power Position
RNS Pump A (Pressure Boundary)	RNS-MP-01A	Yes	Yes	-	-/-	-	-	No	-
RNS Pump B (Pressure Boundary)	RNS-MP-01B	Yes	Yes	-	-/-	-	-	No	-
RNS Heat Exchanger A (Tube Side)	RNS-ME-01A	Yes	Yes	-	-/-	-	-	-	-
RNS Heat Exchanger B (Tube Side)	RNS-ME-01B	Yes	Yes	-	-/-	-	-	-	-
RCS Inner Hot Leg Suction Motor-operated Isolation Valve	RNS-PL-V001A	Yes	Yes	Yes	Yes/Yes	Yes (Valve Position)	Yes	Transfer Closed	As Is
RCS Inner Hot Leg Suction Motor-operated Isolation Valve	RNS-PL-V001B	Yes	Yes	Yes	Yes/Yes	Yes (Valve Position)	Yes	Transfer Closed	As Is
RCS Outer Hot Leg Suction Motor-operated Isolation Valve	RNS-PL-V002A	Yes	Yes	Yes	Yes/Yes	Yes (Valve Position)	Yes	Transfer Closed	As Is
RCS Outer Hot Leg Suction Motor-operated Isolation Valve	RNS-PL-V002B	Yes	Yes	Yes	Yes/Yes	Yes (Valve Position)	Yes	Transfer Closed	As Is

Note: Dash (-) indicates not applicable.

Table 2.3.6-1 (cont.)

Equipment Name	Tag No.	ASME Code Section III	Seismic Cat. I	Remotely Operated Valve	Class 1E/ Qual. for Harsh Envir.	Safety-Related Display	Control PMS	Active Function	Loss of Motive Power Position
RCS Pressure Boundary Thermal Relief Check Valve	RNS-PL-V003A	Yes	Yes	No	-/-	No	-	Transfer Open/ Transfer Closed	-
RCS Pressure Boundary Thermal Relief Check Valve	RNS-PL-V003B	Yes	Yes	No	-/-	No	-	Transfer Open/ Transfer Closed	-
RNS Discharge Motor-operated Containment Isolation Valve	RNS-PL-V011	Yes	Yes	Yes	Yes/No	Yes (Valve Position)	Yes	Transfer Closed	As Is
RNS Discharge Containment Isolation Test Connection	RNS-PL-V012	Yes	Yes	No	-/-	No	No	Transfer Open	-
RNS Discharge Header Containment Isolation Check Valve	RNS-PL-V013	Yes	Yes	No	-/-	No	-	Transfer Open/ Transfer Closed	-
RNS Discharge RCS Pressure Boundary Check Valve	RNS-PL-V015A	Yes	Yes	No	-/-	No	-	Transfer Open/ Transfer Closed	-

Note: Dash (-) indicates not applicable.

Table 2.3.6-1 (cont.)

Equipment Name	Tag No.	ASME Code Section III	Seismic Cat. I	Remotely Operated Valve	Class 1E/ Qual. for Harsh Envir.	Safety-Related Display	Control PMS	Active Function	Loss of Motive Power Position
RNS Discharge RCS Pressure Boundary Check Valve	RNS-PL-V015B	Yes	Yes	No	-/-	No	-	Transfer Open/ Transfer Closed	-
RNS Discharge RCS Pressure Boundary Check Valve	RNS-PL-V017A	Yes	Yes	No	-/-	No	-	Transfer Open/ Transfer Closed	-
RNS Discharge RCS Pressure Boundary Check Valve	RNS-PL-V017B	Yes	Yes	No	-/-	No	-	Transfer Open/ Transfer Closed	-
RNS Hot Leg Suction Pressure Relief Valve	RNS-PL-V021	Yes	Yes	No	-/-	No	-	Transfer Open/ Transfer Closed	-
RNS Suction Header Motor-operated Containment Isolation Valve	RNS-PL-V022	Yes	Yes	Yes	Yes/No	Yes (Valve Position)	Yes	Transfer Closed	As Is
RNS Suction from IRWST Motor-operated Isolation Valve	RNS-PL-V023	Yes	Yes	Yes	Yes/Yes	Yes (Valve Position)	Yes	Transfer Closed	As Is
RNS Discharge to IRWST Motor-operated Isolation Valve	RNS-PL-V024	Yes	Yes	Yes	-/-	No	No	No	As Is

Note: Dash (-) indicates not applicable.

Table 2.3.6-1 (cont.)

Equipment Name	Tag No.	ASME Code Section III	Seismic Cat. I	Remotely Operated Valve	Class 1E/ Qual. for Harsh Envir.	Safety-Related Display	Control PMS	Active Function	Loss of Motive Power Position
RNS Discharge Header Relief Valve	RNS-PL-V045	Yes	Yes	No	-/-	No	-	Transfer Open/ Transfer Closed	-
RNS Suction from Cask Loading Pit Motor-operated Isolation Valve	RNS-PL-V055	Yes	Yes	Yes	No/No	No	No	No	As Is
RNS Suction from Cask Loading Pit Check Valve	RNS-PL-V056	Yes	Yes	No	-/-	No	-	No	-
RNS Pump Miniflow Air-Operated Isolation Valve	RNS-PL-V057A	Yes	Yes	Yes	No/No	No	No	No	Open
RNS Pump Miniflow Air-Operated Isolation Valve	RNS-PL-V057B	Yes	Yes	Yes	No/No	No	No	No	Open
RNS Return from Chemical and Volume Control System (CVS) Containment Isolation Valve	RNS-PL-V061	Yes	Yes	Yes	Yes/No	Yes (Valve Position)	Yes	Transfer Closed	Closed

Note: Dash (-) indicates not applicable.

Table 2.3.6-2

Line Name	Line No.	ASME Code Section III	Leak Before Break	Functional Capability Required
RNS Suction Lines, from the RCS Hot Leg Connection to the RCS Side of Valves RNS PL-V001A and RNS-PL-V001B	RNS-L001 RNS-L002A RNS-L002B	Yes	Yes	No
RNS Suction Lines, from the RCS Pressure Boundary Valves, RNS-PL-V001A and RNS-PL-V001B, to the RNS pumps	RNS-L004A RNS-L004B RNS-L005 RNS-L006 RNS-L007A RNS-L007B RNS-L009A RNS-L009B	Yes	No	Yes Yes Yes No No No No No
RNS Suction Line from CVS	RNS-L061	Yes	No	No
RNS Suction Line from IRWST	RNS-L029	Yes	No	No
RNS Suction Line LTOP Relief	RNS-L040	Yes	No	Yes
RNS Discharge Lines, from the RNS Pumps to the RNS Heat Exchangers RNS-ME-01A and RNS-ME-01B	RNS-L011A RNS-L011B	Yes	No	Yes
RNS Discharge Lines, from RNS Heat Exchanger RNS-ME-01A to Containment Isolation Valve RNS-PL-V011	RNS-L012A RNS-L014	Yes	No	Yes
RNS Discharge Line, from RNS Heat Exchanger RNS-ME-01B to Common Discharge Header RNS-DBC-L014	RNS-L012B	Yes	No	Yes
RNS Discharge Lines, Containment Isolation Valve RNS-PL-V011 to Containment Isolation Valve RNS-PL-V013	RNS-L016	Yes	No	Yes

Table 2.3.6-2 (cont.)

Line Name	Line No.	ASME Code Section III	Leak Before Break	Functional Capability Required
RNS Suction Line from Cask Loading Pit	RNS-L065	Yes	No	No
RNS Discharge Lines, from Containment Isolation Valve RNS-PL-V013 to RCS Pressure Boundary Isolation Valves RNS-PL-V015A and RNS-PL-V015B	RNS-L017 RNS-L018A RNS-L018B	Yes	No	Yes
RNS Discharge Lines, from Direct Vessel Injection (DVI) Line RNS-BBC-L018A to Passive Core Cooling System (PXS) IRWST Return Isolation Valve RNS-PL-V024	RNS-L020	Yes	No	No
RNS Discharge Lines, from RCS Pressure Boundary Isolation Valves RNS-PL-V015A and RNS-PL-V015B to Reactor Vessel DVI Nozzles	RNS-L019A RNS-L019B	Yes	No	Yes
RNS Heat Exchanger Bypass	RNS-L008A RNS-L008B	Yes	No	No
RNS Suction from Spent Fuel Pool	RNS-L052	Yes	No	No
RNS Pump Miniflow Return	RNS-L030A RNS-L030B	Yes	No	No
RNS Discharge to Spent Fuel Pool	RNS-L051	Yes	No	No
RNS Discharge to CVS Purification	RNS-L021	Yes	No	No

Table 2.3.6-3

Equipment Name	Tag No.	Display	Control Function
RNS Pump 1A (Motor)	RNS-MP-01A	Yes (Run Status)	Start
RNS Pump 1B (Motor)	RNS-MP-01B	Yes (Run Status)	Start
RNS Flow Sensor	RNS-01A	Yes	-
RNS Flow Sensor	RNS-01B	Yes	-
RNS Suction from Cask Loading Pit Isolation Valve (Position Indicator)	RNS-PL-V055	Yes	-
RNS Pump Miniflow Isolation Valve (Position Indicator)	RNS-PL-V057A	Yes	-
RNS Pump Miniflow Isolation Valve (Position Indicator)	RNS-PL-V057B	Yes	-

Note: Dash (-) indicates not applicable.

Table 2.3.6-4
Inspections, Tests, Analyses, and Acceptance Criteria

Design Commitment	Inspections, Tests, Analyses	Acceptance Criteria
1. The functional arrangement of the RNS is as described in the Design Description of this Section 2.3.6.	Inspection of the as-built system will be performed.	The as-built RNS conforms with the functional arrangement described in the Design Description of this Section 2.3.6.
2.a) The components identified in Table 2.3.6-1 as ASME Code Section III are designed and constructed in accordance with ASME Code Section III requirements.	Inspection will be conducted of the as-built components as documented in the ASME design reports.	The ASME Code Section III design reports exist for the as-built components identified in Table 2.3.6-1 as ASME Code Section III.
2.b) The piping identified in Table 2.3.6-2 as ASME Code Section III is designed and constructed in accordance with ASME Code Section III requirements.	Inspection will be conducted of the as-built piping as documented in the ASME design reports.	The ASME Code Section III design reports exist for the as-built piping identified in Table 2.3.6-2 as ASME Code Section III.
3.a) Pressure boundary welds in components identified in Table 2.3.6-1 as ASME Code Section III meet ASME Code Section III requirements.	Inspection of the as-built pressure boundary welds will be performed in accordance with the ASME Code Section III.	A report exists and concludes that the ASME Code Section III requirements are met for non-destructive examination of pressure boundary welds.
3.b) Pressure boundary welds in piping identified in Table 2.3.6-2 as ASME Code Section III meet ASME Code Section III requirements.	Inspection of the as-built pressure boundary welds will be performed in accordance with the ASME Code Section III.	A report exists and concludes that the ASME Code Section III requirements are met for non-destructive examination of pressure boundary welds.
4.a) The components identified in Table 2.3.6-1 as ASME Code Section III retain their pressure boundary integrity at their design pressure.	A hydrostatic test will be performed on the components required by the ASME Code Section III to be hydrostatically tested.	A report exists and concludes that the results of the hydrostatic test of the components identified in Table 2.3.6-1 as ASME Code Section III conform with the requirements of the ASME Code Section III.

Table 2.3.6-4 (cont.)
Inspections, Tests, Analyses, and Acceptance Criteria

Design Commitment	Inspections, Tests, Analyses	Acceptance Criteria
4.b) The piping identified in Table 2.3.6-2 as ASME Code Section III retains its pressure boundary integrity at its design pressure.	A hydrostatic test will be performed on the piping required by the ASME Code Section III to be hydrostatically tested.	A report exists and concludes that the results of the hydrostatic test of the piping identified in Table 2.3.6-2 as ASME Code Section III conform with the requirements of the ASME Code Section III.
5.a) The seismic Category I equipment identified in Table 2.3.6-1 can withstand seismic design basis loads without loss of safety function.	i) Inspection will be performed to verify that the seismic Category I equipment identified in Table 2.3.6-1 is located on the Nuclear Island. ii) Type tests, analyses, or a combination of type tests and analyses of seismic Category I equipment will be performed. iii) Inspection will be performed for the existence of a report verifying that the as-built equipment including anchorage is seismically bounded by the tested or analyzed conditions.	i) The seismic Category I equipment identified in Table 2.3.6-1 is located on the Nuclear Island. ii) A report exists and concludes that the seismic Category I equipment can withstand seismic design basis loads without loss of safety function. iii) A report exists and concludes that the as-built equipment including anchorage is seismically bounded by the tested or analyzed conditions.
5.b) Each of the lines identified in Table 2.3.6-2 for which functional capability is required is designed to withstand combined normal and seismic design basis loads without a loss of its functional capability.	Inspection will be performed for the existence of a report verifying that the as-built piping meets the requirements for functional capability.	A report exists and concludes that each of the as-built lines identified in Table 2.3.6-2 for which functional capability is required meets the requirements for functional capability.
6. Each of the as-built lines identified in Table 2.3.6-2 as designed for LBB meets the LBB criteria, or an evaluation is performed of the protection from the dynamic effects of a rupture of the line.	Inspection will be performed for the existence of an LBB evaluation report or an evaluation report on the protection from dynamic effects of a pipe break. Tier 1 Material, Section 3.3, Nuclear Island Buildings, contains the design descriptions and inspections, tests, analyses, and acceptance criteria for protection from the dynamic effects of pipe rupture.	An LBB evaluation report exists and concludes that the LBB acceptance criteria are met by the as-built RCS piping and piping materials, or a pipe break evaluation report exists and concludes that protection from the dynamic effects of a line break is provided.

Table 2.3.6-4 (cont.)
Inspections, Tests, Analyses, and Acceptance Criteria

Design Commitment	Inspections, Tests, Analyses	Acceptance Criteria
7.a) The Class 1E equipment identified in Tables 2.3.6-1 as being qualified for a harsh environment can withstand the environmental conditions that would exist before, during, and following a design basis accident without loss of safety function for the time required to perform the safety function.	i) Type tests, analyses, or a combination of type tests and analyses will be performed on Class 1E equipment located in a harsh environment.	i) A report exists and concludes that the Class 1E equipment identified in Table 2.3.6-1 as being qualified for a harsh environment can withstand the environmental conditions that would exist before, during, and following a design basis accident without loss of safety function for the time required to perform the safety function.
	ii) Inspection will be performed of the as-built Class 1E equipment and the associated wiring, cables, and terminations located in a harsh environment.	ii) A report exists and concludes that the as-built Class 1E equipment and the associated wiring, cables, and terminations identified in Table 2.3.6-1 as being qualified for a harsh environment are bounded by type tests, analyses, or a combination of type tests and analyses.
7.b) The Class 1E components identified in Table 2.3.6-1 are powered from their respective Class 1E division.	Testing will be performed on the RNS by providing a simulated test signal in each Class 1E division.	A simulated test signal exists at the Class 1E equipment identified in Table 2.3.6-1 when the assigned Class 1E division is provided the test signal.
7.c) Separation is provided between RNS Class 1E divisions, and between Class 1E divisions and non-Class 1E cable.	See Tier 1 Material, Table 3.3-6, item 7.d.	See Tier 1 Material, Table 3.3-6, item 7.d.
8.a) The RNS preserves containment integrity by isolation of the RNS lines penetrating the containment.	See Tier 1 Material, Table 2.2.1-3, item 7.	See Tier 1 Material, Table 2.2.1-3, item 7.
8.b) The RNS provides a flow path for long-term, post-accident makeup to the RCS.	See item 1 in this table.	See item 1 in this table.
9.a) The RNS provides LTOP for the RCS during shutdown operations.	i) Inspections will be conducted on the low temperature overpressure protection relief valve to confirm that the capacity of the vendor code plate rating is greater than or equal to system relief requirements.	i) The rated capacity recorded on the valve vendor code plate is not less than the flow required to provide low-temperature overpressure protection for the RCS, as determined by the LTOPS evaluation based on the pressure-temperature curves developed for the as-procured reactor vessel material.

Table 2.3.6-4 (cont.)
Inspections, Tests, Analyses, and Acceptance Criteria

Design Commitment	Inspections, Tests, Analyses	Acceptance Criteria
	ii) Testing and analysis in accordance with the ASME Code Section III will be performed to determine set pressure.	ii) A report exists and concludes that the relief valve opens at a pressure not greater than the set pressure required to provide low-temperature overpressure protection for the RCS, as determined by the LTOPS evaluation based on the pressure-temperature curves developed for the as-procured reactor vessel material.
9.b) The RNS provides heat removal from the reactor coolant during shutdown operations.	i) Inspection will be performed for the existence of a report that determines the heat removal capability of the RNS heat exchangers.	i) A report exists and concludes that the product of the overall heat transfer coefficient and the effective heat transfer area, UA, of each RNS heat exchanger is greater than or equal to 2.2 million Btu/hr-°F.
	ii) Testing will be performed to confirm that the RNS can provide flow through the RNS heat exchangers when the pump suction is aligned to the RCS hot leg and the discharge is aligned to both PXS DVI lines with the RCS at atmospheric pressure.	ii) Each RNS pump provides at least 1400 gpm net flow to the RCS when the hot leg water level is at an elevation 15.5 inches ± 2 inches above the bottom of the hot leg.
	iii) Inspection will be performed of the reactor coolant loop piping.	iii) The RCS cold legs piping centerline is 17.5 inches ± 2 inches above the hot legs piping centerline.
	iv) Inspection will be performed of the RNS pump suction piping.	iv) The RNS pump suction piping from the hot leg to the pump suction piping low point does not form a local high point (defined as an upward slope with a vertical rise greater than 3 inches).
	v) Inspection will be performed of the RNS pump suction nozzle connection to the RCS hot leg.	v) The RNS suction line connection to the RCS is constructed from 20-inch Schedule 140 pipe.

Table 2.3.6-4 (cont.)
Inspections, Tests, Analyses, and Acceptance Criteria

Design Commitment	Inspections, Tests, Analyses	Acceptance Criteria
9.c) The RNS provides low pressure makeup flow from the cask loading pit to the RCS for scenarios following actuation of the ADS.	Testing will be performed to confirm that the RNS can provide low pressure makeup flow from the cask loading pit to the RCS when the pump suction is aligned to the cask loading pit and the discharge is aligned to both PXS DVI lines with RCS at atmospheric pressure.	Each RNS pump provides at least 1100 gpm net flow to the RCS when the water level above the bottom of the cask loading pit is 1 foot ± 6 inches.
9.d) The RNS provides heat removal from the in-containment refueling water storage tank (IRWST).	Testing will be performed to confirm that the RNS can provide flow through the RNS heat exchangers when the pump suction is aligned to the IRWST and the discharge is aligned to the IRWST.	Two operating RNS pumps provide at least 2000 gpm to the IRWST.
10. Safety-related displays identified in Table 2.3.6-1 can be retrieved in the MCR.	Inspection will be performed for retrievability of the safety-related displays in the MCR.	Safety-related displays identified in Table 2.3.6-1 can be retrieved in the MCR.
11.a) Controls exist in the MCR to cause those remotely operated valves identified in Table 2.3.6-1 to perform active functions.	Stroke testing will be performed on the remotely operated valves identified in Table 2.3.6-1 using the controls in the MCR.	Controls in the MCR operate to cause those remotely operated valves identified in Table 2.3.6-1 to perform active functions.
11.b) The valves identified in Table 2.3.6-1 as having PMS control perform active safety functions after receiving a signal from the PMS.	Testing will be performed using real or simulated signals into the PMS.	The valves identified in Table 2.3.6-1 as having PMS control perform the active function identified in the table after receiving a signal from the PMS.

Table 2.3.6-4 (cont.)
Inspections, Tests, Analyses, and Acceptance Criteria

Design Commitment	Inspections, Tests, Analyses	Acceptance Criteria
12.a) The motor-operated and check valves identified in Table 2.3.6-1 perform an active safety-related function to change position as indicated in the table.	i) Tests or type tests of motor-operated valves will be performed that demonstrate the capability of the valve to operate under its design conditions. ii) Inspection will be performed for the existence of a report verifying that the as-built motor-operated valves are bounded by the tested conditions. iii) Tests of the motor-operated valves will be performed under preoperational flow, differential pressure and temperature conditions. iv) Exercise testing of the check valves active safety functions identified in Table 2.3.6-1 will be performed under preoperational test pressure, temperature and fluid flow conditions.	i) A test report exists and concludes that each motor-operated valve changes position as indicated in Table 2.3.6-1 under design conditions. ii) A report exists and concludes that the as-built motor-operated valves are bounded by the tested conditions. iii) Each motor-operated valve changes position as indicated in Table 2.3.6-1 under preoperational test conditions. iv) Each check valve changes position as indicated in Table 2.3.6-1.
12.b) After loss of motive power, the remotely operated valves identified in Table 2.3.6-1 assume the indicated loss of motive power position.	Testing of the remotely operated valves will be performed under the conditions of loss of motive power.	Upon loss of motive power, each remotely operated valve identified in Table 2.3.6-1 assumes the indicated loss of motive power position.
13. Controls exist in the MCR to cause the pumps identified in Table 2.3.6-3 to perform the listed function.	Testing will be performed to actuate the pumps identified in Table 2.3.6-3 using controls in the MCR.	Controls in the MCR cause pumps identified in Table 2.3.6-3 to perform the listed action.
14. Displays of the RNS parameters identified in Table 2.3.6-3 can be retrieved in the MCR.	Inspection will be performed for retrievability in the MCR of the displays identified in Table 2.3.6-3.	Displays of the RNS parameters identified in Table 2.3.6-3 are retrieved in the MCR.

Table 2.3.6-5

Component Name	Tag No.	Component Location
RNS Pump A	RNS-MP-01A	Auxiliary Building
RNS Pump B	RNS-MP-01B	Auxiliary Building
RNS Heat Exchanger A	RNS-ME-01A	Auxiliary Building
RNS Heat Exchanger B	RNS-ME-01B	Auxiliary Building

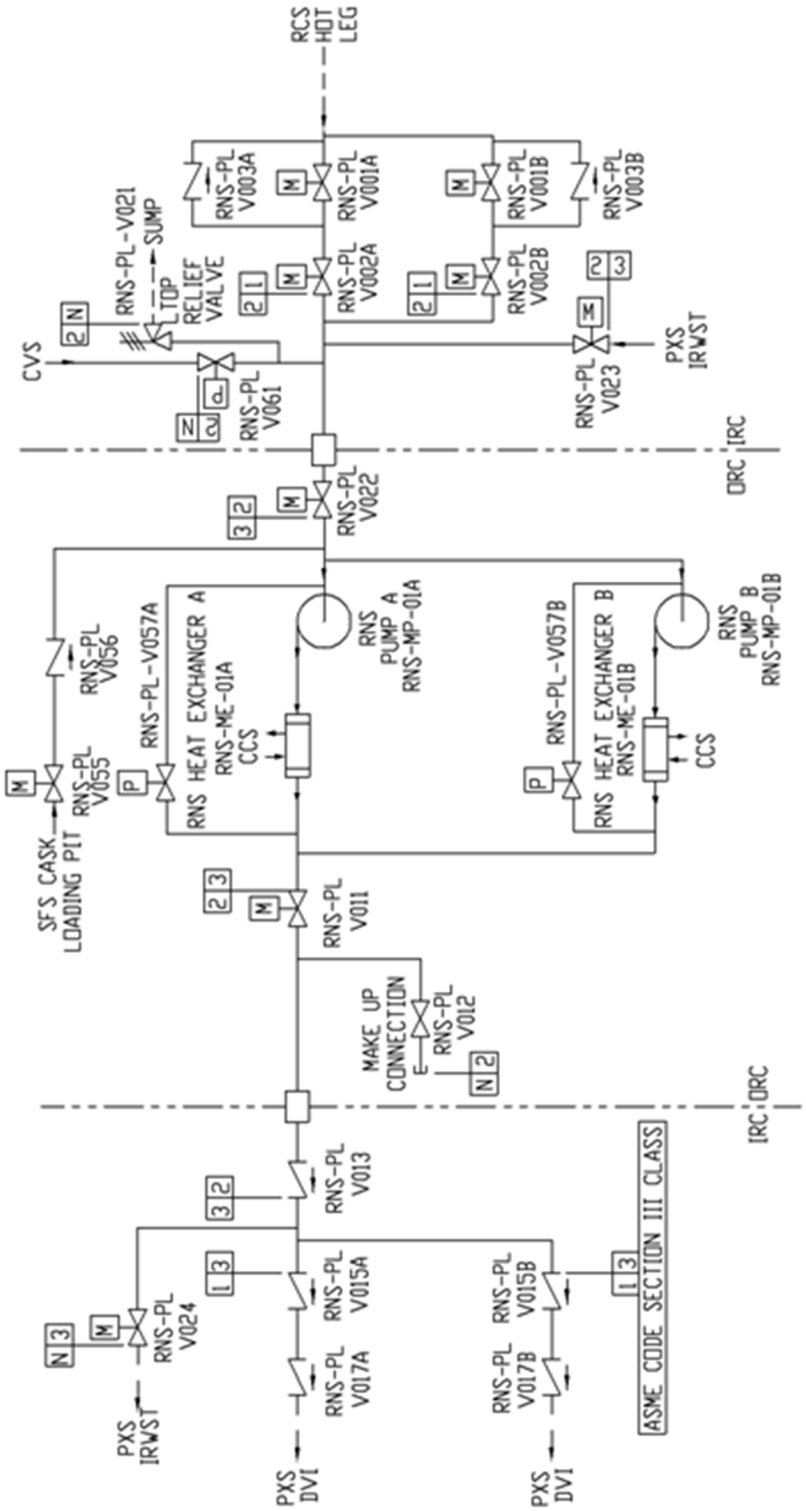

Figure 2.3.6-1
Normal Residual Heat Removal System

2.3.7 Spent Fuel Pool Cooling System

Design Description

The spent fuel pool cooling system (SFS) removes decay heat from spent fuel by transferring heat from the water in the spent fuel pool to the component cooling water system during normal modes of operation. The SFS purifies the water in the spent fuel pool, fuel transfer canal, and in-containment refueling water storage tank during normal modes of operation. Following events such as earthquakes, or fires, if the normal heat removal method is not available, decay heat is removed from spent fuel by boiling water in the pool. In the event of long-term station blackout, makeup water is supplied to the spent fuel pool from onsite storage tanks.

The SFS is as shown in Figure 2.3.7-1 and the component locations of the SFS are as shown in Table 2.3.7-5.

1. The functional arrangement of the SFS is as described in the Design Description of this Section 2.3.7.

2. a) The components identified in Table 2.3.7-1 as ASME Code Section III are designed and constructed in accordance with ASME Code Section III requirements.

   b) The piping lines identified in Table 2.3.7-2 as ASME Code Section III are designed and constructed in accordance with ASME Code Section III requirements.

3. Pressure boundary welds in piping lines identified in Table 2.3.7-2 as ASME Code Section III meet ASME Code Section III requirements.

4. The piping lines identified in Table 2.3.7-2 as ASME Code Section III retain their pressure boundary integrity at their design pressure.

5. The seismic Category I components identified in Table 2.3.7-1 can withstand seismic design basis loads without loss of safety function.

6. a) The Class 1E components identified in Table 2.3.7-1 are powered from their respective Class 1E division.

   b) Separation is provided between SFS Class 1E divisions, and between Class 1E divisions and non-Class 1E cable.

7. The SFS performs the following safety-related functions:

   a) The SFS preserves containment integrity by isolating the SFS piping lines penetrating the containment.

   b) The SFS provides spent fuel cooling for 7 days by boiling the spent fuel pool water and makeup water from on-site water storage tanks.

   c) The SFS provides check valves in the drain line from the refueling cavity to prevent flooding of the refueling cavity during containment flooding.

8. The SFS provides the nonsafety-related function of removing spent fuel decay heat using pumped flow through a heat exchanger.

9. Safety-related displays identified in Table 2.3.7-1 can be retrieved in the main control room (MCR).

10. Controls exist in the MCR to cause the pumps identified in Table 2.3.7-3 to perform their listed functions.

11. Displays of the SFS parameters identified in Table 2.3.7-3 can be retrieved in the MCR.

Inspections, Tests, Analyses, and Acceptance Criteria

Table 2.3.7-4 specifies the inspections, tests, analyses, and associated acceptance criteria for the SFS.

Table 2.3.7-1

Component Name	Tag No.	ASME Code Section III	Seismic Cat 1	Remotely Operated Valve	Class 1E/ Qual for Harsh Envir.	Safety-Related Display	Control PMS	Active Function	Loss of Motive Power Position
Spent Fuel Pool Level Sensor	SFS-019A	No	Yes	-	Yes/No	Yes	-	-	-
Spent Fuel Pool Level Sensor	SFS-019B	No	Yes	-	Yes/No	Yes	-	-	-
Spent Fuel Pool Level Sensor	SFS-019C	No	Yes	-	Yes/No	Yes	-	-	-
Refueling Cavity Drain to SGS Compartment Isolation Valve	SFS-PL-V031	Yes	Yes	No	-/-	Yes	-	-	-
Refueling Cavity to SFS Pump Suction Isolation Valve	SFS-PL-V032	Yes	Yes	No	-/-	No	-	-	-
Refueling Cavity Drain to Containment Sump Isolation Valve	SFS-PL-V033	Yes	Yes	No	-/-	Yes	-	-	-
IRWST to SFS Pump Suction Line Isolation Valve	SFS-PL-V039	Yes	Yes	No	-/-	No	-	-	-
Fuel Transfer Canal to SFS Pump Suction Iso. Valve	SFS-PL-V040	Yes	Yes	No	-/-	No	-	-	-

Note: Dash (-) indicates not applicable.

Table 2.3.7-1 (cont.)

Component Name	Tag No.	ASME Code Section III	Seismic Cat 1	Remotely Operated Valve	Class 1E/ Qual for Harsh Envir.	Safety-Related Display	Control PMS	Active Function	Loss of Motive Power Position
Cask Loading Pit to SFS Pump Suction Isolation Valve	SFS-PL-V041	Yes	Yes	No	-/-	No	-	-	-
Cask Loading Pit to SFS Pump Suction Isolation Valve	SFS-PL-V042	Yes	Yes	No	-/-	No	-	Transfer Closed	-
SFS Pump Discharge Line to Cask Loading Pit Isolation Valve	SFS-PL-V045	Yes	Yes	No	-/-	No	-	Transfer Closed	-
Cask Loading Pit to WLS Isolation Valve	SFS-PL-V049	Yes	Yes	No	-/-	No	-	Transfer Closed	-
Spent Fuel Pool to Cask Washdown Pit Isolation Valve	SFS-PL-V066	Yes	Yes	No	-/-	No	-	Transfer Open	-
Cask Washdown Pit Drain Isolation Valve	SFS-PL-V068	Yes	Yes	No	-/-	No	-	Transfer Open	-
Refueling Cavity Drain Line Check Valve	SFS-PL-V071	Yes	Yes	No	-/-	No	-	Transfer Open Transfer Closed	-

Note: Dash (-) indicates not applicable.

Table 2.3.7-1 (cont.)

Component Name	Tag No.	ASME Code Section III	Seismic Cat 1	Remotely Operated Valve	Class 1E/ Qual for Harsh Envir.	Safety-Related Display	Control PMS	Active Function	Loss of Motive Power Position
Refueling Cavity Drain Line Check Valve	SFS-PL-V072	Yes	Yes	No	-/-	No	-	Transfer Open Transfer Closed	-
SFS Containment Floodup Isolation Valve	SFS-PL-V075	Yes	Yes	No	-/-	Yes	-	-	-

Note: Dash (-) indicates not applicable.

Table 2.3.7-2

Piping Line Name	Line Number	ASME Code Section III
Spent Fuel Pool to RNS Pump Suction	L014	Yes
Cask Loading Pit to RNS Pump Suction	L015	Yes
Refueling Cavity Drain	L033	Yes
PXS IRWST to SFS Pump Suction	L035	Yes
Refueling Cavity Skimmer to SFS Pump Suction	L036	Yes
Refueling Cavity Drain	L037	Yes
Refueling Cavity Drain	L044	Yes
Fuel Transfer Canal Drain	L047	Yes
Cask Washdown Pit Drain	L068	Yes
Cask Loading Pit Drain	L043	Yes
Cask Pit Transfer Branch Line	L045	Yes
Refueling Cavity Drain	L030	Yes
Refueling Cavity Drain	L040	Yes
Spent Fuel Pool Drain	L066	Yes
Cask Loading Pit to WLS	L067	Yes
RNS Return to Spent Fuel Pool	L100	Yes
SFS Containment Floodup Line	L120	Yes

Table 2.3.7-3

Component Name	Tag No.	Display	Control Function
SFS Pump 1A	SFS-MP-01A	Yes (Run Status)	Start
SFS Pump 1B	SFS-MP-01B	Yes (Run Status)	Start
SFS Flow Sensor	SFS-13A	Yes	-
SFS Flow Sensor	SFS-13B	Yes	-
Spent Fuel Pool Temperature Sensor	SFS-018	Yes	-
Cask Loading Pit Level Sensor	SFS-022	Yes	-

Note: Dash (-) indicates not applicable.

Table 2.3.7-4
Inspections, Tests, Analyses, and Acceptance Criteria

Design Commitment	Inspections, Tests, Analyses	Acceptance Criteria
1. The functional arrangement of the SFS is as described in the Design Description of this Section 2.3.7.	Inspection of the as-built system will be performed.	The as-built SFS conforms with the functional arrangement as described in the Design Description of this Section 2.3.7.
2.a) The components identified in Table 2.3.7-1 as ASME Code Section III are designed and constructed in accordance with ASME Code Section III requirements.	Inspection will be conducted of the ASME as-built components as documented in the ASME design reports.	The ASME Code Section III design reports exist for the as-built components identified in Table 2.3.7-1 as ASME Code Section III.
2.b) The piping lines identified in Table 2.3.7-2 as ASME Code Section III are designed and constructed in accordance with ASME Code Section III requirements.	Inspection will be conducted of the as-built piping lines as documented in the ASME design reports.	The ASME Code Section III design reports exist for the as-built piping lines identified in Table 2.3.7-2 as ASME Code Section III.
3. Pressure boundary welds in piping lines identified in Table 2.3.7-2 as ASME Code Section III meet ASME Code Section III requirements.	Inspection of the as-built pressure boundary welds will be performed in accordance with the ASME Code Section III.	A report exists and concludes that the ASME Code Section III requirements are met for non-destructive examination of pressure boundary welds.
4. The piping lines identified in Table 2.3.7-2 as ASME Code Section III retain their pressure boundary integrity at their design pressure.	A hydrostatic test will be performed on the piping lines required by the ASME Code Section III to be hydrostatically tested.	A report exists and concludes that the results of the hydrostatic test of the piping lines identified in Table 2.3.7-2 as ASME Code Section III conform with the requirements of the ASME Code Section III.

Table 2.3.7-4 (cont.)
Inspections, Tests, Analyses, and Acceptance Criteria

Design Commitment	Inspections, Tests, Analyses	Acceptance Criteria
5. The seismic Category I components identified in Table 2.3.7-1 can withstand seismic design basis loads without loss of safety functions.	i) Inspection will be performed to verify that the seismic Category I components identified in Table 2.3.7-1 are located on the Nuclear Island. ii) Type tests, analyses, or a combination of type tests and analyses of seismic Category I equipment will be performed. iii) Inspection will be performed for the existence of a report verifying that the as-built equipment including anchorage is seismically bounded by the tested or analyzed conditions.	i) The seismic Category I components identified in Table 2.3.7-1 are located on the Nuclear Island. ii) A report exists and concludes that the seismic Category I equipment can withstand seismic design basis loads without loss of safety function. iii) A report exists and concludes that the as-built equipment including anchorage is seismically bounded by the tested or analyzed conditions.
6.a) The Class 1E components identified in Table 2.3.7-1 are powered from their respective Class 1E division.	Testing will be performed on the SFS by providing a simulated test signal in each Class 1E division.	A simulated test signal exists at the Class 1E components identified in Table 2.3.7-1 when the assigned Class 1E division is provided the test signal.
6.b) Separation is provided between SFS Class 1E divisions, and between Class 1E divisions and non-Class 1E cable.	See Tier 1 Material, Table 3.3-6, item 7.d.	See Tier 1 Material, Table 3.3-6, item 7.d.
7.a) The SFS preserves containment integrity by isolation of the SFS lines penetrating the containment.	See Tier 1 Material, Table 2.2.1-3, items 1 and 7.	See Tier 1 Material, Table 2.2.1-3, items 1 and 7.

Table 2.3.7-4 (cont.)
Inspections, Tests, Analyses, and Acceptance Criteria

Design Commitment	Inspections, Tests, Analyses	Acceptance Criteria
7.b) The SFS provides spent fuel cooling for 7 days by boiling the spent fuel pool water and makeup water from on-site storage tanks.	i) Inspection will be performed to verify that the spent fuel pool includes a sufficient volume of water.	i) The volume of the spent fuel pool and fuel transfer canal above the fuel and to the elevation 6 feet below the operating deck is greater than or equal to 129,500 gallons.
	ii) Inspection will be performed to verify the cask washdown pit includes sufficient volume of water.	ii) The water volume of the cask washdown pit is greater than or equal to 30,900 gallons.
	iii) A safety-related flow path exists from the cask washdown pit to the spent fuel pool.	iii) See item 1 of this table.
	iv) See Tier 1 Material Table 2.2.2-3, item 7.f for inspection, testing, and acceptance criteria for the makeup water supply from the passive containment cooling system (PCS) water storage tank to the spent fuel pool.	iv) See Tier 1 Material Table 2.2.2-3, item 7.f for inspection, testing, and acceptance criteria for the makeup water supply from the PCS water storage tank to the spent fuel pool.
	v) Inspection will be performed to verify that the passive containment cooling system water storage tank includes a sufficient volume of water.	v) See Tier 1 Material Table 2.2.2-3, item 7.f for the volume of the passive containment cooling system water storage tank.
	vi) See Tier 1 Material Table 2.2.2-3, items 8.a and 8.b for inspection, testing, and acceptance criteria to verify that the passive containment cooling system ancillary water storage tank includes a sufficient volume of water.	vi) See Tier 1 Material Table 2.2.2-3, items 8.a and 8.b for inspection, testing, and acceptance criteria for the volume of the passive containment cooling system ancillary water storage tank.
7c) The SFS provides check valves in the drain line from the refueling cavity to prevent flooding of the refueling cavity during containment flooding.	Exercise testing of the check valves with active safety-functions identified in Table 2.3.7-1 will be performed under pre-operational test pressure, temperature and flow conditions.	Each check valve changes position as indicated on Table 2.3.7-1.

Table 2.3.7-4 (cont.)
Inspections, Tests, Analyses, and Acceptance Criteria

Design Commitment	Inspections, Tests, Analyses	Acceptance Criteria
8. The SFS provides the nonsafety-related function of removing spent fuel decay heat using pumped flow through a heat exchanger.	i) Inspection will be performed for the existence of a report that determines the heat removal capability of the SFS heat exchangers. ii) Testing will be performed to confirm that each SFS pump provides flow through its heat exchanger when taking suction from the SFP and returning flow to the SFP.	i) A report exists and concludes that the heat transfer characteristic, UA, of each SFS heat exchanger is greater than or equal to 2.2 million Btu/hr-°F. ii) Each SFS pump produces at least 900 gpm through its heat exchanger.
9. Safety-related displays identified in Table 2.3.7-1 can be retrieved in the MCR.	Inspection will be performed for retrievability of the safety-related displays in the MCR.	Safety-related displays identified in Table 2.3.7-1 can be retrieved in the MCR.
10. Controls exist in the MCR to cause the pumps identified in Table 2.3.7-3 to perform their listed functions.	Testing will be performed to actuate the pumps identified in Table 2.3.7-3 using controls in the MCR.	Controls in the MCR cause pumps identified in Table 2.3.7-3 to perform the listed functions.
11. Displays of the SFS parameters identified in Table 2.3.7-3 can be retrieved in the MCR.	Inspection will be performed for retrievability in the MCR of the displays identified in Table 2.3.7-3.	Displays of the SFS parameters identified in Table 2.3.7-3 are retrieved in the MCR.

Table 2.3.7-5

Component Name	Tag No.	Component Location
SFS Pump A	SFS-MP-01A	Auxiliary Building
SFS Pump B	SFS-MP-01B	Auxiliary Building
SFS Heat Exchanger A	SFS-ME-01A	Auxiliary Building
SFS Heat Exchanger B	SFS-ME-01B	Auxiliary Building

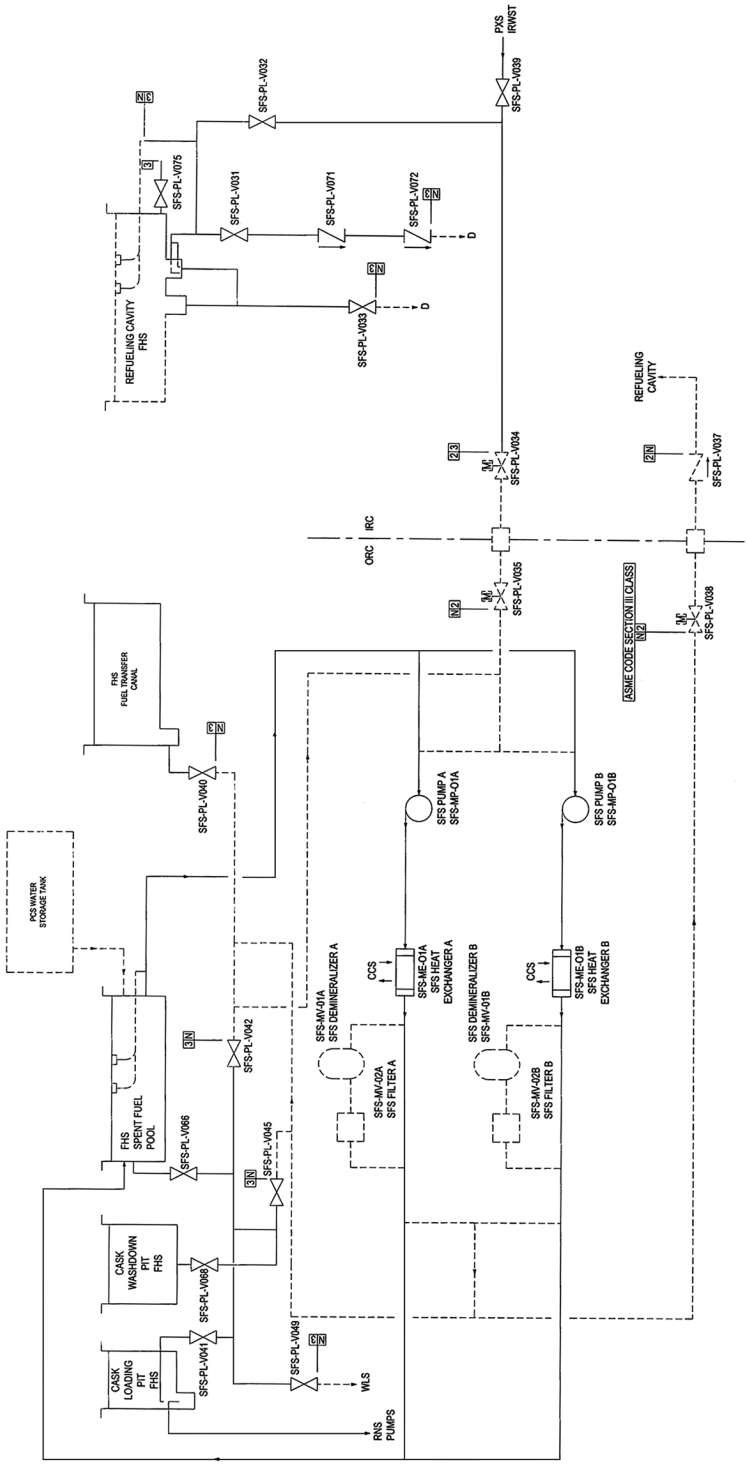

Figure 2.3.7-1
Spent Fuel Pool Cooling System

2.3.8 Service Water System

Design Description

The service water system (SWS) transfers heat from the component cooling water heat exchangers to the atmosphere. The SWS operates during normal modes of plant operation, including startup, power operation (full and partial loads), cooldown, shutdown, and refueling.

The SWS is as shown in Figure 2.3.8-1 and the component locations of the SWS are as shown Table 2.3.8-3.

1. The functional arrangement of the SWS is as described in the Design Description of this Section 2.3.8.

2. The SWS provides the nonsafety-related function of transferring heat from the component cooling water system (CCS) to the surrounding atmosphere to support plant shutdown and spent fuel pool cooling.

3. Controls exist in the main control room (MCR) to cause the components identified in Table 2.3.8-1 to perform the listed function.

4. Displays of the parameters identified in Table 2.3.8-1 can be retrieved in the MCR.

Inspections, Tests, Analyses, and Acceptance Criteria

Table 2.3.8-2 specifies the inspections, tests, analyses, and associated acceptance criteria for the SWS.

Table 2.3.8-1

Equipment Name	Tag No.	Display	Control Function
Service Water Pump A (Motor)	SWS-MP-01A	Yes (Run Status)	Start
Service Water Pump B (Motor)	SWS-MP-01B	Yes (Run Status)	Start
Service Water Cooling Tower Fan A (Motor)	SWS-MA-01A	Yes (Run Status)	Start
Service Water Cooling Tower Fan B (Motor)	SWS-MA-01B	Yes (Run Status)	Start
Service Water Pump 1A Flow Sensor	SWS-004A	Yes	-
Service Water Pump 1B Flow Sensor	SWS-004B	Yes	-
Service Water Pump A Discharge Valve	SWS-PL-V002A	Yes (Valve Position)	Open
Service Water Pump B Discharge Valve	SWS-PL-V002B	Yes (Valve Position)	Open
Service Water Pump A Discharge Temperature Sensor	SWS-005A	Yes	-
Service Water Pump B Discharge Temperature Sensor	SWS-005B	Yes	-
Service Water Cooling Tower Basin Level	SWS-009	Yes	-

Note: Dash (-) indicates not applicable.

Table 2.3.8-2
Inspections, Tests, Analyses, and Acceptance Criteria

Design Commitment	Inspections, Tests, Analyses	Acceptance Criteria
1. The functional arrangement of the SWS is as described in the Design Description of this Section 2.3.8.	Inspection of the as-built system will be performed.	The as-built SWS conforms with the functional arrangement as described in the Design Description of this Section 2.3.8.
2. The SWS provides the nonsafety-related function of transferring heat from the component cooling water system to the surrounding atmosphere to support plant shutdown and spent fuel pool cooling.	i) Testing will be performed to confirm that the SWS can provide cooling water to the CCS heat exchangers. ii) Inspection will be performed for the existence of a report that determines the heat transfer capability of each cooling tower cell. iii) Testing will be performed to confirm that the SWS cooling tower basin has adequate reserve volume.	i) Each SWS pump can provide at least 10,000 gpm of cooling water through its CCS heat exchanger. ii) A report exists and concludes that the heat transfer rate of each cooling tower cell is greater than or equal to 170 million Btu/hr at a 80.1°F ambient wet bulb temperature and a cold water temperature of 90°F. iii) The SWS tower basin contains a usable volume of at least 230,000 gallons at the basin low level alarm setpoint.
3. Controls exist in the MCR to cause the components identified in Table 2.3.8-1 to perform the listed function.	Testing will be performed on the components in Table 2.3.8-1 using controls in the MCR.	Controls in the MCR operate to cause the components listed in Table 2.3.8-1 to perform the listed functions.
4. Displays of the parameters identified in Table 2.3.8-1 can be retrieved in the MCR.	Inspection will be performed for retrievability of parameters in the MCR.	The displays identified in Table 2.3.8-1 can be retrieved in the MCR.

Table 2.3.8-3

Component Name	Tag No.	Component Location
Service Water Pump A	SWS-MP-01A	Turbine Building or yard
Service Water Pump B	SWS-MP-01B	Turbine Building or yard
Service Water Cooling Tower	SWS-ME-01	Yard

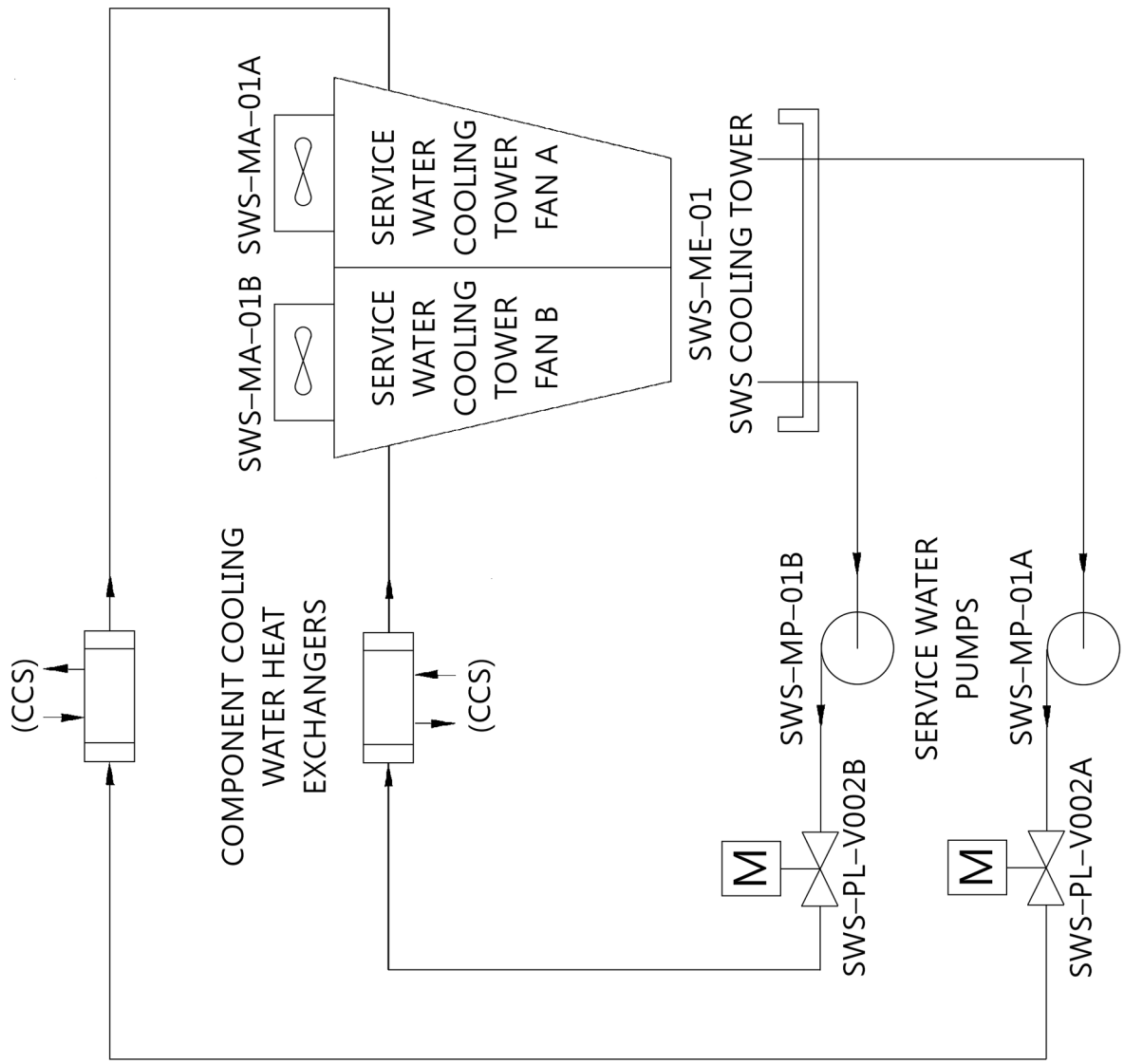

Figure 2.3.8-1
Service Water System

2.3.9 Containment Hydrogen Control System

Design Description

The containment hydrogen control system (VLS) limits hydrogen gas concentration in containment during accidents.

The VLS has catalytic hydrogen recombiners (VLS-MY-E01A and VLS-MY-E01B) that are located inside containment. The VLS has hydrogen igniters located as shown on Table 2.3.9-2.

1. The functional arrangement of the VLS is as described in the Design Description of this Section 2.3.9.

2. a) The hydrogen monitors identified in Table 2.3.9-1 are powered by the non-Class 1E dc and UPS system.

   b) The components identified in Table 2.3.9-2 are powered from their respective non-Class 1E power group.

3. The VLS provides the non-safety related function to control the containment hydrogen concentration for beyond design basis accidents.

4. a) Controls exist in the MCR to cause the components identified in Table 2.3.9-2 to perform the listed function.

   b) The components identified in Table 2.3.9-2 perform the listed function after receiving a manual signal from the diverse actuation system (DAS).

5. Displays of the parameters identified in Table 2.3.9-1 can be retrieved in the MCR.

Inspections, Tests, Analyses, and Acceptance Criteria

Table 2.3.9-3 specifies the inspections, tests, analyses, and associated acceptance criteria for the VLS.

Table 2.3.9-1

Equipment	Tag No.	Display
Containment Hydrogen Monitor	VLS-001	Yes
Containment Hydrogen Monitor	VLS-002	Yes
Containment Hydrogen Monitor	VLS-003	Yes

Table 2.3.9-2

Equipment Name	Tag Number	Function	Power Group Number	Location	Room No.
Hydrogen Igniter 01	VLS-EH-01	Energize	1	Tunnel connection loop compartments	11204
Hydrogen Igniter 02	VLS-EH-02	Energize	2	Tunnel connection loop compartments	11204
Hydrogen Igniter 03	VLS-EH-03	Energize	1	Tunnel connection loop compartments	11204
Hydrogen Igniter 04	VLS-EH-04	Energize	2	Tunnel connection loop compartments	11204
Hydrogen Igniter 05	VLS-EH-05	Energize	1	Loop compartment 02	11402
Hydrogen Igniter 06	VLS-EH-06	Energize	2	Loop compartment 02	11502
Hydrogen Igniter 07	VLS-EH-07	Energize	2	Loop compartment 02	11402
Hydrogen Igniter 08	VLS-EH-08	Energize	1	Loop compartment 02	11502
Hydrogen Igniter 09	VLS-EH-09	Energize	1	In-containment refueling water storage tank (IRWST)	11305
Hydrogen Igniter 10	VLS-EH-10	Energize	2	IRWST	11305
Hydrogen Igniter 11	VLS-EH-11	Energize	2	Loop compartment 01	11401
Hydrogen Igniter 12	VLS-EH-12	Energize	1	Loop compartment 01	11501
Hydrogen Igniter 13	VLS-EH-13	Energize	1	Loop compartment 01	11401
Hydrogen Igniter 14	VLS-EH-14	Energize	2	Loop compartment 01	11501
Hydrogen Igniter 15	VLS-EH-15	Energize	2	IRWST	11305
Hydrogen Igniter 16	VLS-EH-16	Energize	1	IRWST	11305
Hydrogen Igniter 17	VLS-EH-17	Energize	2	Northeast valve room	11207
Hydrogen Igniter 18	VLS-EH-18	Energize	1	Northeast accumulator room	11207
Hydrogen Igniter 19	VLS-EH-19	Energize	2	East valve room	11208
Hydrogen Igniter 20	VLS-EH-20	Energize	2	Southeast accumulator room	11206
Hydrogen Igniter 21	VLS-EH-21	Energize	1	Southeast valve room	11206
Hydrogen Igniter 22	VLS-EH-22	Energize	1	Lower compartment area (core makeup tank [CMT] and valve area)	11400
Hydrogen Igniter 23	VLS-EH-23	Energize	2	Lower compartment area (CMT and valve area)	11400
Hydrogen Igniter 24	VLS-EH-24	Energize	2	Lower compartment area (CMT and valve area)	11400

Table 2.3.9-2 (cont.)

Equipment Name	Tag Number	Function	Power Group Number	Location	Room No.
Hydrogen Igniter 25	VLS-EH-25	Energize	2	Lower compartment area (CMT and valve area)	11400
Hydrogen Igniter 26	VLS-EH-26	Energize	2	Lower compartment area (CMT and valve area)	11400
Hydrogen Igniter 27	VLS-EH-27	Energize	1	Lower compartment area (CMT and valve area)	11400
Hydrogen Igniter 28	VLS-EH-28	Energize	1	Lower compartment area (CMT and valve area)	11400
Hydrogen Igniter 29	VLS-EH-29	Energize	1	Lower compartment area (CMT and valve area)	11400
Hydrogen Igniter 30	VLS-EH-30	Energize	2	Lower compartment area (CMT and valve area)	11400
Hydrogen Igniter 31	VLS-EH-31	Energize	1	Lower compartment area (CMT and valve area)	11400
Hydrogen Igniter 32	VLS-EH-32	Energize	1	Lower compartment area (CMT and valve area)	11400
Hydrogen Igniter 33	VLS-EH-33	Energize	2	North CVS equipment room	11209
Hydrogen Igniter 34	VLS-EH-34	Energize	1	North CVS equipment room	11209
Hydrogen Igniter 35	VLS-EH-35	Energize	1	IRWST	11305
Hydrogen Igniter 36	VLS-EH-36	Energize	2	IRWST	11305
Hydrogen Igniter 37	VLS-EH-37	Energize	1	IRWST	11305
Hydrogen Igniter 38	VLS-EH-38	Energize	2	IRWST	11305
Hydrogen Igniter 39	VLS-EH-39	Energize	1	Upper compartment lower region	11500
Hydrogen Igniter 40	VLS-EH-40	Energize	2	Upper compartment lower region	11500
Hydrogen Igniter 41	VLS-EH-41	Energize	2	Upper compartment lower region	11500
Hydrogen Igniter 42	VLS-EH-42	Energize	1	Upper compartment lower region	11500
Hydrogen Igniter 43	VLS-EH-43	Energize	1	Upper compartment lower region	11500
Hydrogen Igniter 44	VLS-EH-44	Energize	1	Upper compartment lower region	11500
Hydrogen Igniter 45	VLS-EH-45	Energize	2	Upper compartment lower region	11500
Hydrogen Igniter 46	VLS-EH-46	Energize	2	Upper compartment lower region	11500

Table 2.3.9-2 (cont.)

Equipment Name	Tag Number	Function	Power Group Number	Location	Room No.
Hydrogen Igniter 47	VLS-EH-47	Energize	1	Upper compartment lower region	11500
Hydrogen Igniter 48	VLS-EH-48	Energize	2	Upper compartment lower region	11500
Hydrogen Igniter 49	VLS-EH-49	Energize	1	Pressurizer compartment	11503
Hydrogen Igniter 50	VLS-EH-50	Energize	2	Pressurizer compartment	11503
Hydrogen Igniter 51	VLS-EH-51	Energize	1	Upper compartment mid-region	11500
Hydrogen Igniter 52	VLS-EH-52	Energize	2	Upper compartment mid-region	11500
Hydrogen Igniter 53	VLS-EH-53	Energize	2	Upper compartment mid-region	11500
Hydrogen Igniter 54	VLS-EH-54	Energize	1	Upper compartment mid-region	11500
Hydrogen Igniter 55	VLS-EH-55	Energize	1	Refueling cavity	11504
Hydrogen Igniter 56	VLS-EH-56	Energize	2	Refueling cavity	11504
Hydrogen Igniter 57	VLS-EH-57	Energize	2	Refueling cavity	11504
Hydrogen Igniter 58	VLS-EH-58	Energize	1	Refueling cavity	11504
Hydrogen Igniter 59	VLS-EH-59	Energize	2	Pressurizer compartment	11503
Hydrogen Igniter 60	VLS-EH-60	Energize	1	Pressurizer compartment	11503
Hydrogen Igniter 61	VLS-EH-61	Energize	1	Upper compartment-upper region	11500
Hydrogen Igniter 62	VLS-EH-62	Energize	2	Upper compartment-upper region	11500
Hydrogen Igniter 63	VLS-EH-63	Energize	1	Upper compartment-upper region	11500
Hydrogen Igniter 64	VLS-EH-64	Energize	2	Upper compartment-upper region	11500

Table 2.3.9-3
Inspections, Tests, Analyses, and Acceptance Criteria

Design Commitment	Inspections, Tests, Analyses	Acceptance Criteria
1. The functional arrangement of the VLS is as described in the Design Description of this Section 2.3.9.	Inspection of the as-built system will be performed.	The as-built VLS conforms with the functional arrangement as described in the Design Description of this Section 2.3.9.
2.a) The hydrogen monitors identified in Table 2.3.9-1 are powered by the non-Class 1E dc and UPS system.	Testing will be performed by providing a simulated test signal in each power group of the non-Class 1E dc and UPS system.	A simulated test signal exists at the hydrogen monitors identified in Table 2.3.9-1 when the non-Class 1E dc and UPS system is provided the test signal.
2.b) The components identified in Table 2.3.9-2 are powered from their respective non-Class 1E power group.	Testing will be performed by providing a simulated test signal in each non-Class 1E power group.	A simulated test signal exists at the equipment identified in Table 2.3.9-2 when the assigned non-Class 1E power group is provided the test signal.
3. The VLS provides the nonsafety-related function to control the containment hydrogen concentration for beyond design basis accidents.	i) Inspection for the number of igniters will be performed. ii) Operability testing will be performed on the igniters. iii) An inspection of the as-built containment internal structures will be performed. iv) An inspection will be performed of the as-built IRWST vents that are located in the roof of the IRWST along the side of the IRWST next to the containment shell.	i) At least 64 hydrogen igniters are provided inside containment at the locations specified in Table 2.3.9-2. ii) The surface temperature of the igniter exceeds 1700°F. iii) The equipment access opening and CMT-A opening constitute at least 98% of vent paths within Room 11206 that vent to Room 11300. The minimum distance between the equipment access opening and containment shell is at least 24.3 feet. The minimum distance between the CMT-A opening and the containment shell is at least 9.4 feet. The CMT-B opening constitutes at least 98% of vent paths within Room 11207 that vent to Room 11300 and is a minimum distance of 24.6 feet away from the containment shell. Other openings through the ceilings of these rooms must be at least 3 feet from the containment shell. iv) The discharge from each of these IRWST vents is oriented generally away from the containment shell.

Table 2.3.9-3 (cont.)
Inspections, Tests, Analyses, and Acceptance Criteria

Design Commitment	Inspections, Tests, Analyses	Acceptance Criteria
4.a) Controls exist in the MCR to cause the components identified in Table 2.3.9-2 to perform the listed function.	Testing will be performed on the igniters using the controls in the MCR.	Controls in the MCR operate to energize the igniters.
4.b) The components identified in Table 2.3.9-2 perform the listed function after receiving manual a signal from DAS.	Testing will be performed on the igniters using the DAS controls.	The igniters energize after receiving a signal from DAS.
5. Displays of the parameters identified in Table 2.3.9-1 can be retrieved in the MCR.	Inspection will be performed for retrievability of the displays identified in Table 2.3.9-1 in the MCR.	Displays identified in Table 2.3.9-1 can be retrieved in the MCR.

2.3.10 Liquid Radwaste System

Design Description

The liquid radwaste system (WLS) receives, stores, processes, samples and monitors the discharge of radioactive wastewater.

The WLS has components which receive and store radioactive or potentially radioactive liquid waste. These are the reactor coolant drain tank, the containment sump, the effluent holdup tanks and the waste holdup tanks. The WLS components store and process the waste during normal operation and during anticipated operational occurrences. Monitoring of the liquid waste is performed prior to discharge.

The WLS is as shown in Figure 2.3.10-1 and the component locations of the WLS are as shown in Table 2.3.10-5.

1. The functional arrangement of the WLS is as described in the Design Description of this Section 2.3.10.

2. a) The components identified in Table 2.3.10-1 as ASME Code Section III are designed and constructed in accordance with ASME Code Section III requirements.

   b) The piping identified in Table 2.3.10-2 as ASME Code Section III is designed and constructed in accordance with ASME Code Section III requirements.

3. a) Pressure boundary welds in components identified in Table 2.3.10-1 as ASME Code Section III meet ASME Code Section III requirements.

   b) Pressure boundary welds in piping identified in Table 2.3.10-2 as ASME Code Section III meet ASME Code Section III requirements.

4. a) The components identified in Table 2.3.10-1 as ASME Code Section III retain their pressure boundary integrity at their design pressure.

   b) The piping identified in Table 2.3.10-2 as ASME Code Section III retains its pressure boundary integrity at its design pressure.

5. a) The seismic Category I equipment identified in Table 2.3.10-1 can withstand seismic design basis loads without loss of safety function.

   b) Each of the lines identified in Table 2.3.10-2 for which functional capability is required is designed to withstand combined normal and seismic design basis loads without a loss of its functional capability.

6. The WLS provides the following safety-related functions:

   a) The WLS preserves containment integrity by isolation of the WLS lines penetrating the containment.

   b) Check valves in drain lines to the containment sump limit cross flooding of compartments.

7. The WLS provides the nonsafety-related functions of:

   a) Detecting leaks within containment to the containment sump.

   b) Controlling releases of radioactive materials in liquid effluents.

8. Controls exist in the main control room (MCR) to cause the remotely operated valve identified in Table 2.3.10-3 to perform its active function.

9. The check valves identified in Table 2.3.10-1 perform an active safety-related function to change position as indicated in the table.

10. Displays of the parameters identified in Table 2.3.10-3 can be retrieved in the MCR.

Inspections, Tests, Analyses, and Acceptance Criteria

Table 2.3.10-4 specifies the inspections, tests, analyses, and associated acceptance criteria for the WLS.

Table 2.3.10-1

Equipment Name	Tag No.	ASME Code Section III	Seismic Cat. I	Remotely Operated Valve	Class 1E/ Qual. for Harsh Envir.	Safety-Related Display	Active Function
WLS Containment Sump Level Sensor	WLS-LT-034	No	Yes	No	No/No	No	-
WLS Containment Sump Level Sensor	WLS-LT-035	No	Yes	No	No/No	No	-
WLS Containment Sump Level Sensor	WLS-LT-036	No	Yes	No	No/No	No	-
WLS Drain from Passive Core Cooling System (PXS) Compartment A (Room 11206) Check Valve	WLS-PL-V071B	Yes	Yes	No	-/-	No	Transfer Closed
WLS Drain from PXS Compartment A (Room 11206) Check Valve	WLS-PL-V072B	Yes	Yes	No	-/-	No	Transfer Closed
WLS Drain from PXS Compartment B (Room 11207) Check Valve	WLS-PL-V071C	Yes	Yes	No	-/-	No	Transfer Closed
WLS Drain from PXS Compartment B (Room 11207) Check Valve	WLS-PL-V072C	Yes	Yes	No	-/-	No	Transfer Closed
WLS Drain from Chemical and Volume Control System (CVS) Compartment (Room 11209) Check Valve	WLS-PL-V071A	Yes	Yes	No	-/-	No	Transfer Closed
WLS Drain from CVS Compartment (Room 11209) Check Valve	WLS-PL-V072A	Yes	Yes	No	-/-	No	Transfer Closed

Note: Dash (-) indicates not applicable.

Table 2.3.10-2

Line Name	Line No.	ASME Section III	Functional Capability Required
WLS Drain from PXS Compartment A	WLS-PL-L062 WLS-PL-L078	Yes	Yes
WLS Drain from PXS Compartment B	WLS-PL-L063 WLS-PL-L079	Yes	Yes
WLS Drain from CVS Compartment	WLS-PL-L061 WSL-PL-L077 WLS-PL-L020	Yes	Yes

Table 2.3.10-3

Equipment Name	Tag No.	Display	Control Function
WLS Effluent Discharge Isolation Valve	WLS-PL-V223	-	Close
Reactor Coolant Drain Tank Level	WLS-JE-LT002	Yes	-
Letdown Flow from CVS to WLS	WLS-JE-FT020	Yes	-

Table 2.3.10-4
Inspections, Tests, Analyses, and Acceptance Criteria

Design Commitment	Inspections, Tests, Analyses	Acceptance Criteria
1. The functional arrangement of the WLS is as described in the Design Description of this Section 2.3.10.	Inspection of the as-built system will be performed.	The as-built WLS conforms with the functional arrangement as described in the Design Description of this Section 2.3.10.
2.a) The components identified in Table 2.3.10-1 as ASME Code Section III are designed and constructed in accordance with ASME Code Section III requirements.	Inspection will be conducted of the as-built components as documented in the ASME design reports.	The ASME Code Section III design report exists for the as built components identified in Table 2.3.10-1 as ASME Code Section III.
2.b) The piping identified in Table 2.3.10-2 as ASME Code Section III is designed and constructed in accordance with ASME Code Section III requirements.	Inspection will be conducted of the as-built piping as documented in the ASME design reports.	The ASME Code Section III design reports exist for the as-built piping identified in Table 2.3.10-2 as ASME Code Section III.
3.a) Pressure boundary welds in components identified in Table 2.3.10-1 as ASME Code Section III meet ASME Code Section III requirements.	Inspection of the as-built pressure boundary welds will be performed in accordance with the ASME Code Section III.	A report exists and concludes that the ASME Code Section III requirements are met for non-destructive examination of pressure boundary welds.
3.b) Pressure boundary welds in piping identified in Table 2.3.10-2 as ASME Code Section III meet ASME Code Section III requirements.	Inspection of the as-built pressure boundary welds will be performed in accordance with the ASME Code Section III.	A report exists and concludes that the ASME Code Section III requirements are met for non-destructive examination of pressure boundary welds.
4.a) The components identified in Table 2.3.10-1 as ASME Code Section III retain their pressure boundary integrity at their design pressure.	A hydrostatic test will be performed on the components required by the ASME Code Section III to be hydrostatically tested.	A report exists and concludes that the results of the hydrostatic test of the components identified in Table 2.3.10-1 as ASME Code Section III conform with the requirements of the ASME Code Section III.
4.b) The piping identified in Table 2.3.10-2 as ASME Code Section III retains its pressure boundary integrity at its design pressure.	A hydrostatic test will be performed on the piping required by the ASME Code Section III to be hydrostatically tested.	A report exists and concludes that the results of the hydrostatic test of the piping identified in Table 2.3.10-2 as ASME Code Section III conform with the requirements of the ASME Code Section III.

Table 2.3.10-4 (cont.)
Inspections, Tests, Analyses, and Acceptance Criteria

Design Commitment	Inspections, Tests, Analyses	Acceptance Criteria
5.a) The seismic Category I equipment identified in Table 2.3.10-1 can withstand seismic design basis loads without loss of safety function.	i) Inspection will be performed to verify that the seismic Category I equipment identified in Table 2.3.10-1 is located on the Nuclear Island. ii) Type tests, analyses, or a combination of type tests and analyses of seismic Category I equipment will be performed. iii) Inspection will be performed for the existence of a report verifying that the as-built equipment including anchorage is seismically bounded by the tested or analyzed conditions.	i) The seismic Category I equipment identified in Table 2.3.10-1 is located on the Nuclear Island. ii) A report exists and concludes that the seismic Category I equipment can withstand seismic design basis loads without loss of safety function. iii) A report exists and concludes that the as-built equipment including anchorage is seismically bounded by the tested or analyzed conditions.
5.b) Each of the lines identified in Table 2.3.10-2 for which functional capability is required is designed to withstand combined normal and seismic design basis loads without a loss of its functional capability.	Inspection will be performed for the existence of a report verifying that the as-built piping meets the requirements for functional capability.	A report exists and concludes that each of the as-built lines identified in Table 2.3.10-2 for which functional capability is required meets the requirements for functional capability.
6.a) The WLS preserves containment integrity by isolation of the WLS lines penetrating the containment.	See Tier 1 Material, Table 2.2.1-3, items 1 and 7.	See Tier 1 Material, Table 2.2.1-3, items 1 and 7.
6.b) Check valves in drain lines to the containment sump limit cross flooding of compartments.	Refer to item 9 in this table.	Refer to item 9 in this table.

Table 2.3.10-4 (cont.)
Inspections, Tests, Analyses, and Acceptance Criteria

Design Commitment	Inspections, Tests, Analyses	Acceptance Criteria
7.a) The WLS provides the nonsafety-related function of detecting leaks within containment to the containment sump.	i) Inspection will be performed for retrievability of the displays of containment sump level channels WLS-LT-034, WLS-LT-035, and WLS-LT-036 in the MCR. ii) Testing will be performed by adding water to the sump and observing display of sump level.	i) Nonsafety-related displays of WLS containment sump level channels WLS-LT-034, WLS-LT-035, and WLS-LT-036 can be retrieved in the MCR. ii) A report exists and concludes that sump level channels WLS-LT-034, WLS-LT-035, and WLS-LT-036 can detect a change of 1.75 ± 0.1 inches.
7.b) The WLS provides the nonsafety-related function of controlling releases of radioactive materials in liquid effluents.	Tests will be performed to confirm that a simulated high radiation signal from the discharge radiation monitor, WLS-RE-229, causes the discharge isolation valve WLS-PL-V223 to close.	A simulated high radiation signal causes the discharge control isolation valve WLS-PL-V223 to close.
8. Controls exist in the MCR to cause the remotely operated valve identified in Table 2.3.10-3 to perform its active function.	Stroke testing will be performed on the remotely operated valve listed in Table 2.3.10-3 using controls in the MCR.	Controls in the MCR operate to cause the remotely operated valve to perform its active function.
9. The check valves identified in Table 2.3.10-1 perform an active safety-related function to change position as indicated in the table.	Exercise testing of the check valves with active safety functions identified in Table 2.3.10-1 will be performed under pre-operational test pressure, temperature and flow conditions.	Each check valve changes position as indicated on Table 2.3.10-1.
10. Displays of the parameters identified in Table 2.3.10-3 can be retrieved in the MCR.	Inspection will be performed for retrievability of the displays identified in Table 2.3.10-3 in the MCR.	Displays identified in Table 2.3.10-3 can be retrieved in the MCR.

Table 2.3.10-5

Component Name	Tag No.	Component Location
WLS Reactor Coolant Drain Tank	WLS-MT-01	Containment
WLS Containment Sump	WLS-MT-02	Containment
WLS Degasifier Column	WLS-MV-01	Auxiliary Building
WLS Effluent Holdup Tanks	WLS-MT-05A WLS-MT-05B	Auxiliary Building
WLS Waste Holdup Tanks	WLS-MT-06A WLS-MT-06B	Auxiliary Building
WLS Waste Pre-Filter	WLS-MV-06	Auxiliary Building
WLS Ion Exchangers	WLS-MV-03 WLS-MV-04A WLS-MV-04B WLS-MV-04C	Auxiliary Building
WLS Waste After-Filter	WLS-MV-07	Auxiliary Building
WLS Monitor Tanks	WLS-MT-07A WLS-MT-07B WLS-MT-07C	Auxiliary Building
	WLS-MT-07D WLS-MT-07E WLS-MT-07F	Radwaste Building

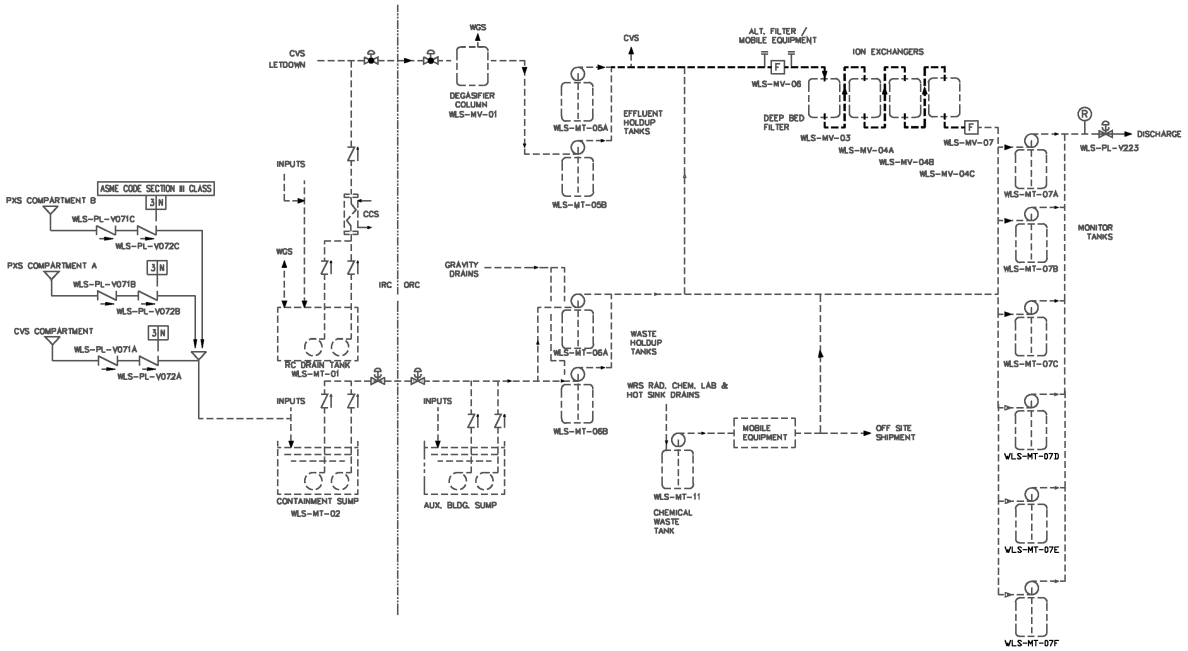

Figure 2.3.10-1
Liquid Radwaste System

2.3.11 Gaseous Radwaste System

Design Description

The gaseous radwaste system (WGS) receives, processes, and discharges the radioactive waste gases received within acceptable off-site release limits during normal modes of plant operation including power generation, shutdown and refueling.

The WGS is as shown in Figure 2.3.11-1 and the component locations of the WGS are as shown in Table 2.3.11-3.

1. The functional arrangement of the WGS is as described in the Design Description of this Section 2.3.11.

2. The equipment identified in Table 2.3.11-1 can withstand the appropriate seismic design basis loads without loss of its structural integrity function.

3. The WGS provides the nonsafety-related functions of:

   a) Processing radioactive gases prior to discharge.

   b) Controlling the releases of radioactive materials in gaseous effluents.

   c) The WGS is purged with nitrogen on indication of high oxygen levels in the system.

Inspections, Tests, Analyses, and Acceptance Criteria

Table 2.3.11-2 specifies the inspections, tests, analyses, and associated acceptance criteria for the WGS.

Table 2.3.11-1

Equipment Name	Tag No.	Seismic Category I
WGS Activated Carbon Delay Bed A	WGS-MV-02A	No(1)
WGS Activated Carbon Delay Bed B	WGS-MV-02B	No(1)
WGS Discharge Isolation Valve	WGS-PL-V051	No

Note:

1. The WGS activated carbon delay beds (WGS-MV-02A and B) are designed to one-half SSE.

Table 2.3.11-2
Inspections, Tests, Analyses, and Acceptance Criteria

Design Commitment	Inspections, Tests, Analyses	Acceptance Criteria
1. The functional arrangement of the WGS is as described in the Design Description of this Section 2.3.11.	Inspection of the as-built system will be performed.	The as-built WGS conforms with the functional arrangement as described in the Design Description of this Section 2.3.11.
2. The equipment identified as having seismic design requirements in Table 2.3.11-1 can withstand seismic design basis loads without loss of its structural integrity function.	i) Inspection will be performed to verify that the equipment identified as having seismic design requirements in Table 2.3.11-1 is located on the Nuclear Island. ii) Type tests, analyses, or a combination of type tests and analyses of seismically designed equipment will be performed. iii) Inspection will be performed for the existence of a report verifying that the as-built equipment including anchorage is seismically bounded by the tested or analyzed conditions.	i) The equipment identified as having seismic design requirements in Table 2.3.11-1 is located on the Nuclear Island. ii) A report exists and concludes that the seismically designed equipment can withstand appropriate seismic design basis loads without loss of its structural integrity function. iii) A report exists and concludes that the as-built equipment including anchorage is seismically bounded by the tested or analyzed conditions.
3.a) The WGS provides the nonsafety-related function of processing radioactive gases prior to discharge.	Inspection will be performed to verify the contained volume of each of the activated carbon delay beds, WGS-MV02A and WGS-MV02B.	A report exists and concludes that the contained volume in each of the activated carbon delay beds, WGS-MV02A and WGS-MV02B, is at least 80 ft^3.
3.b) The WGS provides the nonsafety-related function of controlling the releases of radioactive materials in gaseous effluents.	Tests will be performed to confirm that the presence of a simulated high radiation signal from the discharge radiation monitor, WGS-017, causes the discharge control isolation valve WGS-PL-V051 to close.	A simulated high radiation signal causes the discharge control isolation valve WGS-PL-V051 to close.
3.c) The WGS is purged with nitrogen on indication of high oxygen levels in the system.	Tests will be performed to confirm that the presence of a simulated high oxygen level signal from the oxygen monitors (WGS-025A, -025B) causes the nitrogen purge valve (WGS-PL-V002) to open and the WLS degasifier vacuum pumps (WLS-MP-03A, -03B) to stop.	A simulated high oxygen level signal causes the nitrogen purge valve (WGS-PL-V002) to open and the WLS degasifier vacuum pumps (WLS-MP-03A, -03B) to stop.

Table 2.3.11-3

Equipment Name	Tag No.	Component Location
WGS Gas Cooler	WGS-ME-01	Auxiliary Building
WGS Moisture Separator	WGS-MV-03	Auxiliary Building
WGS Activated Carbon Delay Bed A	WGS-MV-02A	Auxiliary Building
WGS Activated Carbon Delay Bed B	WGS-MV-02B	Auxiliary Building

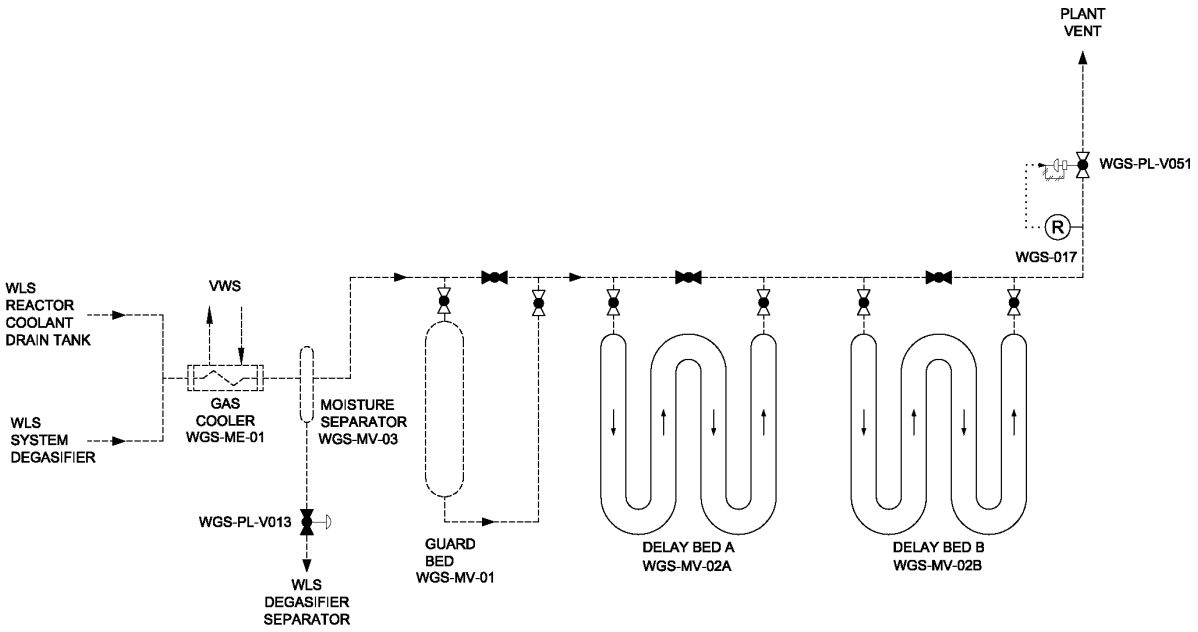

Figure 2.3.11-1
Gaseous Radwaste System

2.3.12 Solid Radwaste System

Design Description

The solid radwaste system (WSS) receives, collects, and stores the solid radioactive wastes received prior to their processing and packaging by mobile equipment for shipment off-site.

The component locations of the WSS are as shown in Table 2.3.12-2.

1. The functional arrangement of the WSS is as described in the Design Description of this Section 2.3.12.

2. The WSS provides the nonsafety-related function of storing radioactive spent resins prior to processing or shipment.

Table 2.3.12-1
Inspections, Tests, Analyses, and Acceptance Criteria

Design Commitment	Inspections, Tests, Analyses	Acceptance Criteria
1. The functional arrangement of the WSS is as described in the Design Description of this Section 2.3.12.	Inspection of the as-built system will be performed.	The as-built WSS conforms with the functional arrangement as described in the Design Description of this Section 2.3.12.
2. The WSS provides the nonsafety-related function of storing radioactive solids prior to processing or shipment.	Inspection will be performed to verify that the volume of each of the spent resin tanks, WSS-MV01A and WSS-MV01B, is at least 250 ft^3.	A report exists and concludes that the volume of each of the spent resin tanks, WSS-MV01A and WSS-MV01B, is at least 250 ft^3.

Table 2.3.12-2

Component Name	Tag No.	Component Location
WSS Spent Resin Tank A	WSS-MV-01A	Auxiliary Building
WSS Spent Resin Tank B	WSS-MV-01B	Auxiliary Building

2.3.13 Primary Sampling System

The primary sampling system collects samples of fluids in the reactor coolant system (RCS) and the containment atmosphere during normal operations.

The PSS is as shown in Figure 2.3.13-1. The PSS Grab Sampling Unit (PSS-MS-01) is located in the Auxiliary Building.

1. The functional arrangement of the PSS is as described in the Design Description of this Section 2.3.13.

2. The components identified in Table 2.3.13-1 as ASME Code Section III are designed and constructed in accordance with ASME Code Section III requirements.

3. Pressure boundary welds in components identified in Table 2.3.13-1 as ASME Code Section III meet ASME Code Section III requirements.

4. The components identified in Table 2.3.13-1 as ASME Code Section III retain their pressure boundary integrity at their design pressure.

5. The seismic Category I equipment identified in Table 2.3.13-1 can withstand seismic design basis loads without loss of safety function.

6. a) The Class 1E equipment identified in Table 2.3.13-1 as being qualified for a harsh environment can withstand the environmental conditions that would exist before, during, and following a design basis accident without loss of their safety function, for the time required to perform the safety function.

   b) The Class 1E components identified in Table 2.3.13-1 are powered from their respective Class 1E division.

   c) Separation is provided between PSS Class 1E divisions, and between Class 1E divisions and non-Class 1E divisions.

7. The PSS provides the safety-related function of preserving containment integrity by isolation of the PSS lines penetrating the containment.

8. The PSS provides the nonsafety-related function of providing the capability of obtaining reactor coolant and containment atmosphere samples.

9. Safety-related displays identified in Table 2.3.13-1 can be retrieved in the MCR.

10. a) Controls exist in the MCR to cause those remotely operated valves identified in Table 2.3.13-1 to perform active functions.

    b) The valves identified in Table 2.3.13-1 as having protection and safety monitoring system (PMS) control perform an active function after receiving a signal from the PMS.

11. a) The check valve identified in Table 2.3.13-1 perform an active safety-related function to change position as indicated in the table.

    b) After loss of motive power, the remotely operated valves identified in Table 2.3.13-1 assume the indicated loss of motive power position.

12. Controls exist in the MCR to cause the valves identified in Table 2.3.13-2 to perform the listed function.

Inspections, Tests, Analyses, and Acceptance Criteria

Table 2.3.13-3 specifies the inspections, tests, analyses, and associated acceptance criteria for the PSS.

Table 2.3.13-1

Equipment Name	Tag No.	ASME Code Section III	Seismic Cat. I	Remotely Operated Valve	Class 1E/ Qual. for Harsh Envir.	Safety-Related Display	Control PMS/DAS	Active Function	Loss of Motive Power Position
Liquid Sample Line Containment Isolation Valve Outside Reactor Containment (ORC)	PSS-PL-V011	Yes	Yes	Yes	Yes/No	Yes (Valve Position)	Yes/No	Transfer Closed	Closed
Liquid Sample Line Containment Isolation Valve Inside Reactor Containment (IRC)	PSS-PL-V010A	Yes	Yes	Yes	Yes/Yes	Yes (Valve Position)	Yes/No	Transfer Closed	Closed
Liquid Sample Line Containment Isolation Valve IRC	PSS-PL-V010B	Yes	Yes	Yes	Yes/Yes	Yes (Valve Position)	Yes/No	Transfer Closed	Closed
Containment Air Sample Containment Isolation Valve IRC	PSS-PL-V008	Yes	Yes	Yes	Yes/Yes	Yes (Valve Position)	Yes/No	Transfer Closed	Closed
Air Sample Line Containment Isolation Valve ORC	PSS-PL-V046	Yes	Yes	Yes	Yes/No	Yes (Valve Position)	Yes/No	Transfer Closed	Closed
Sample Return Line Containment Isolation Valve ORC	PSS-PL-V023	Yes	Yes	Yes	Yes/No	Yes (Valve Position)	Yes/No	Transfer Closed	Closed
Sample Return Containment Isolation Check Valve IRC	PSS-PL-V024	Yes	Yes	No	-/-	No	-/-	Transfer Closed	Closed

Note: A dash (-) indicates not applicable.

Table 2.3.13-2

Equipment Name	Tag No.	Control Function
Hot Leg 1 Sample Isolation Valve	PSS-PL-V001A	Transfer Open/Transfer Closed
Hot Leg 2 Sample Isolation Valve	PSS-PL-V001B	Transfer Open/Transfer Closed

Table 2.3.13-3
Inspections, Tests, Analyses, and Acceptance Criteria

Design Commitment	Inspections, Tests, Analyses	Acceptance Criteria
1. The functional arrangement of the PSS is as described in the Design Description of this Section 2.3.13.	Inspection of the as-built system will be performed.	The as-built PSS conforms with the functional arrangement as described in the Design Description of this Section 2.3.13.
2. The components identified in Table 2.3.13-1 as ASME Code Section III are designed and constructed in accordance with ASME Code Section III requirements.	Inspection will be conducted of the as-built components as documented in the ASME design reports.	The ASME Code Section III design reports exist for the as-built components identified in Table 2.3.13-1 as ASME Code Section III.
3. Pressure boundary welds in components identified in Table 2.3.13-1 as ASME Code Section III meet ASME Code Section III requirements.	Inspection of the as-built pressure boundary welds will be performed in accordance with the ASME Code Section III.	A report exists and concludes that the ASME Code Section III requirements are met for non-destructive examination of pressure boundary welds.
4. The components identified in Table 2.3.13-1 as ASME Code Section III retain their pressure boundary integrity at their design pressure.	A hydrostatic test will be performed on the components required by the ASME Code Section III to be hydrostatically tested.	A report exists and concludes that the results of the hydrostatic test of the components identified in Table 2.3.13-1 as ASME Code Section III conform with the requirements of the ASME Code Section III.
5. The seismic Category I equipment identified in Table 2.3.13-1 can withstand seismic design basis loads without loss of its safety function.	i) Inspection will be performed to verify that the seismic Category I equipment and valves identified in Table 2.3.13-1 are located on the Nuclear Island. ii) Type tests, analyses, or a combination of type tests and analyses of seismic Category I equipment will be performed. iii) Inspection will be performed for the existence of a report verifying that the as-built equipment including anchorage is seismically bounded by the tested or analyzed conditions.	i) The seismic Category I equipment identified in Table 2.3.13-1 is located on the Nuclear Island. ii) A report exists and concludes that the seismic Category I equipment can withstand seismic design basis loads without loss of safety function. iii) A report exists and concludes that the as-built equipment including anchorage is seismically bounded by the tested or analyzed conditions.

Table 2.3.13-3 (cont.)
Inspections, Tests, Analyses, and Acceptance Criteria

Design Commitment	Inspections, Tests, Analyses	Acceptance Criteria
6.a) The Class 1E equipment identified in Tables 2.3.13-1 as being qualified for a harsh environment can withstand the environmental conditions that would exist before, during, and following a design basis accident without loss of their safety function, for the time required to perform the safety function.	i) Type tests, analyses, or a combination of type tests and analyses will be performed on Class 1E equipment located in a harsh environment. ii) Inspection will be performed of the as-built Class 1E equipment and the associated wiring, cables, and terminations located in a harsh environment.	i) A report exists and concludes that the Class 1E equipment identified in Table 2.3.13-1 as being qualified for a harsh environment can withstand the environmental conditions that would exist before, during, and following a design basis accident without loss of its safety function for the time required to perform the safety function. ii) A report exists and concludes that the as-built Class 1E equipment and the associated wiring, cables, and terminations identified in Table 2.3.13-1 as being qualified for a harsh environment are bounded by type tests, analyses, or a combination of type tests and analyses.
6.b) The Class 1E components identified in Table 2.3.13-1 are powered from their respective Class 1E division.	Testing will be performed on the PSS by providing a simulated test signal in each Class 1E division.	A simulated test signal exists at the Class 1E equipment identified in Table 2.3.13-1 when the assigned Class 1E division is provided the test signal.
6.c) Separation is provided between PSS Class 1E divisions, and between Class 1E divisions and non-Class 1E divisions.	See Tier 1 Material, Table 3.3-6, item 7.d.	See Tier 1 Material, Table 3.3-6, item 7.d.
7. The PSS provides the safety-related function of preserving containment integrity by isolation of the PSS lines penetrating the containment.	See Tier 1 Material, Table 2.2.1-3, item 7.	See Tier 1 Material, Table 2.2.1-3, item 7.
8. The PSS provides the nonsafety-related function of providing the capability of obtaining reactor coolant and containment atmosphere samples.	Testing will be performed to obtain samples of the reactor coolant and containment atmosphere.	A sample is drawn from the reactor coolant and the containment atmosphere.
9. Safety-related displays identified in Table 2.3.13-1 can be retrieved in the MCR.	Inspection will be performed for retrievability of the safety-related displays in the MCR.	The safety-related displays identified in Table 2.3.13-1 can be retrieved in the MCR.

Table 2.3.13-3 (cont.)
Inspections, Tests, Analyses, and Acceptance Criteria

Design Commitment	Inspections, Tests, Analyses	Acceptance Criteria
10.a) Controls exist in the MCR to cause those remotely operated valves identified in Table 2.3.13-1 to perform active functions.	Stroke testing will be performed on the remotely operated valves identified in Table 2.3.13-1 using the controls in the MCR.	Controls in the MCR operate to cause those remotely operated valves identified in Table 2.3.13-1 to perform active functions.
10.b) The valves identified in Table 2.3.13-1 as having PMS control perform an active function after receiving a signal from the PMS.	Testing will be performed on remotely operated valves listed in Table 2.3.13-1 using real or simulated signals into the PMS.	The remotely operated valves identified in Table 2.3.13-1 as having PMS control perform the active function identified in the table after receiving a signal from the PMS.
11.a) The check valve identified in Table 2.3.13-1 performs an active safety-related function to change position as indicated in the table.	Exercise testing of the check valve with an active safety function identified in Table 2.3.13-1 will be performed under preoperational test pressure, temperature, and fluid flow conditions.	The check valve changes position as indicated in Table 2.3.13-1.
11.b) After loss of motive power, the remotely operated valves identified in Table 2.3.13-1 assume the indicated loss of motive power position.	Testing of the remotely operated valves will be performed under the conditions of loss of motive power.	After loss of motive power, each remotely operated valve identified in Table 2.3.13-1 assumes the indicated loss of motive power position.
12. Controls exist in the MCR to cause the valves identified in Table 2.3.13-2 to perform the listed function.	Testing will be performed on the components in Table 2.3.13-2 using controls in the MCR.	Controls in the MCR cause valves identified in Table 2.3.13-2 to perform the listed functions.

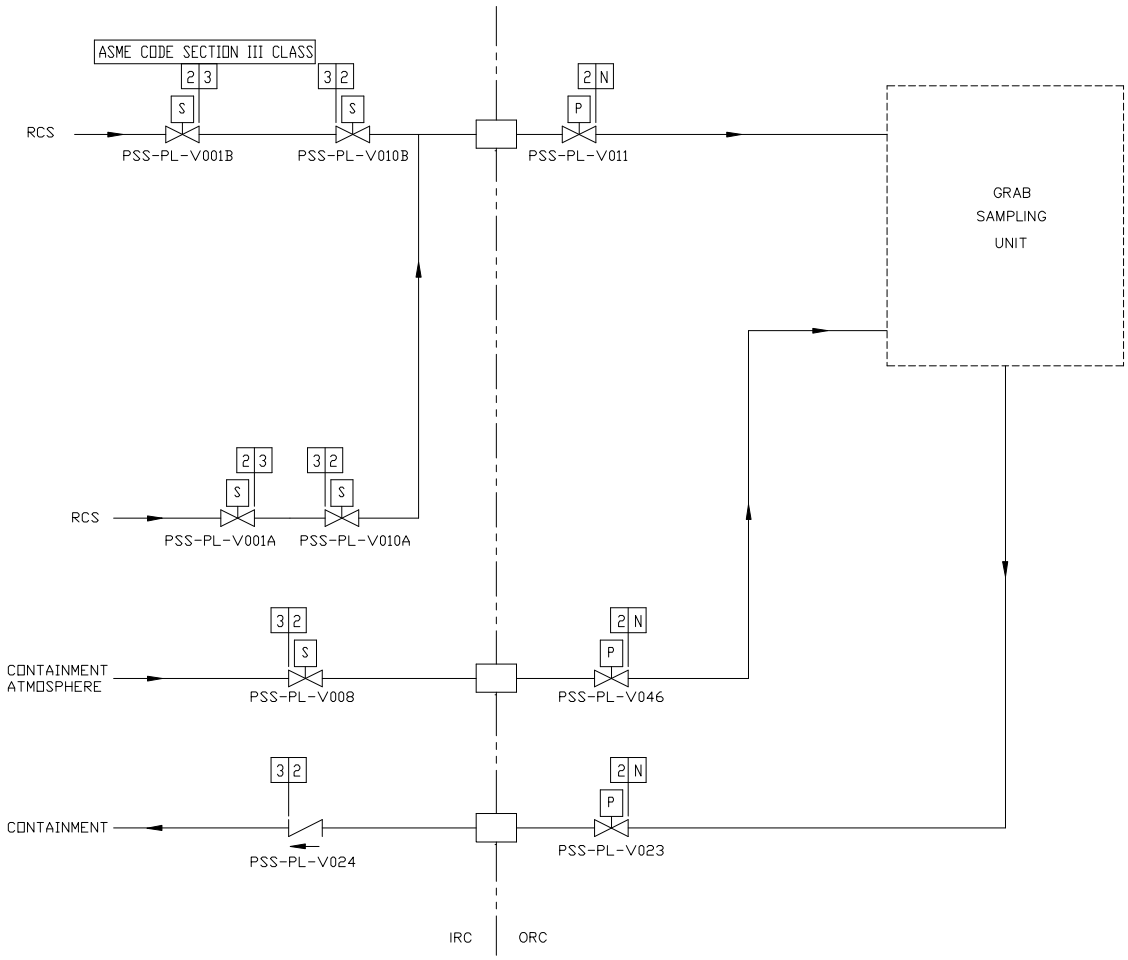

Figure 2.3.13-1
Primary Sampling System

2.3.14 Demineralized Water Transfer and Storage System

Design Description

The demineralized water transfer and storage system (DWS) receives water from the demineralized water treatment system (DTS), and provides a reservoir of demineralized water to supply the condensate storage tank and for distribution throughout the plant. Demineralized water is processed in the DWS to remove dissolved oxygen. In addition to supplying water for makeup of systems which require pure water, the demineralized water is used to sluice spent radioactive resins from the ion exchange vessels in the chemical and volume control system (CVS), the spent fuel pool cooling system (SFS), and the liquid radwaste system (WLS) to the solid radwaste system (WSS).

The component locations of the DWS are as shown in Table 2.3.14-3.

1. The functional arrangement of the DWS is as described in the Design Description of this Section 2.3.14.

2. The DWS provides the safety-related function of preserving containment integrity by isolation of the DWS lines penetrating the containment.

3. The DWS condensate storage tank (CST) provides the nonsafety-related function of water supply to the FWS startup feedwater pumps.

4. Displays of the parameters identified in Table 2.3.14-1 can be retrieved in the main control room (MCR).

Inspections, Tests, Analyses, and Acceptance Criteria

Table 2.3.14-2 specifies the inspections, tests, analyses, and associated acceptance criteria for the DWS.

Table 2.3.14-1

Equipment Name	Tag No.	Display	Control Function
Condensate Storage Tank Water Level	DWS-006	Yes	-

Note: Dash (-) indicates not applicable.

Table 2.3.14-2
Inspections, Tests, Analyses, and Acceptance Criteria

Design Commitment	Inspections, Tests, Analyses	Acceptance Criteria
1. The functional arrangement of the DWS is as described in the Design Description of this Section 2.3.14.	Inspection of the as-built system will be performed.	The as-built DWS conforms with the functional arrangement as described in the Design Description of this Section 2.3.14.
2. The DWS provides the safety-related function of preserving containment integrity by isolation of the DWS lines penetrating the containment.	See Tier 1 Material, Table 2.2.1-3, items 1 and 7.	See Tier 1 Material, Table 2.2.1-3, items 1 and 7.
3. The DWS CST provides the nonsafety-related function of water supply to the FWS startup feedwater tanks.	Inspection of the DWS CST will be performed.	The volume of the CST between the tank overflow and the startup feedwater pumps supply connection is greater than or equal to 325,000 gallons.
4. Displays of the parameters identified in Table 2.3.14-1 can be retrieved in the MCR.	Inspection will be performed for retrievability or parameters in the MCR.	The displays identified in Table 2.3.14-1 can be retrieved in the MCR.

Table 2.3.14-3

Component Name	Tag No.	Component Location
Demineralizer Water Storage Tank Degasification System Package	DWS-MS-01	Annex Building
Condensate Storage Tank Degasification System Package	DWS-MS-02	Turbine Building
Demineralized Water Storage Tank	DWS-MT-01	Yard
Condensate Storage Tank	DWS-MT-02	Yard

2.3.15 Compressed and Instrument Air System

Design Description

The compressed and instrument air system (CAS) consists of three subsystems: instrument air, service air, and high-pressure air. The instrument air subsystem supplies compressed air for air-operated valves and dampers. The service air subsystem supplies compressed air at outlets throughout the plant to power air-operated tools and is used as a motive force for air-powered pumps. The service air subsystem is also utilized as a supply source for breathing air. The high-pressure air subsystem supplies air to the main control room emergency habitability system (VES), the generator breaker package, and fire fighting apparatus recharge station.

The CAS is required for normal operation and startup of the plant.

The component locations of the CAS are as shown in Table 2.3.15-3.

1. The functional arrangement of the CAS is as described in the Design Description of this Section 2.3.15.

2. The CAS provides the safety-related function of preserving containment integrity by isolation of the CAS lines penetrating the containment.

3. Displays of the parameters identified in Table 2.3.15-1 can be retrieved in the main control room (MCR).

Inspections, Tests, Analyses, and Acceptance Criteria

Table 2.3.15-2 specifies the inspections, tests, analyses, and associated acceptance criteria for the CAS.

Table 2.3.15-1

Equipment Name	Tag No.	Display	Control Function
Instrument Air Pressure	CAS-011	Yes	-

Note: Dash (-) indicates not applicable.

Table 2.3.15-2
Inspections, Tests, Analyses, and Acceptance Criteria

Design Commitment	Inspections, Tests, Analyses	Acceptance Criteria
1. The functional arrangement of the CAS is as described in the Design Description of this Section 2.3.15.	Inspection of the as-built system will be performed.	The as-built CAS conforms with the functional arrangement as described in the Design Description of this Section 2.3.15.
2. The CAS provides the safety-related function of preserving containment integrity by isolation of the CAS lines penetrating the containment.	See Tier 1 Material, Table 2.2.1-3, items 1 and 7.	See Tier 1 Material, Table 2.2.1-3, items 1 and 7.
3. Displays of the parameters identified in Table 2.3.15-1 can be retrieved in the MCR.	Inspection will be performed for retrievability of parameters in the MCR.	The displays identified in Table 2.3.15-1 can be retrieved in the MCR.

Table 2.3.15-3

Component Name	Tag No.	Component Location
Instrument Air Compressor Package A	CAS-MS-01A	Turbine Building
Instrument Air Compressor Package B	CAS-MS-01B	Turbine Building
Instrument Air Dryer Package A	CAS-MS-02A	Turbine Building
Instrument Air Dryer Package B	CAS-MS-02B	Turbine Building
Service Air Compressor Package A	CAS-MS-03A	Turbine Building
Service Air Compressor Package B	CAS-MS-03B	Turbine Building
Service Air Dryer Package A	CAS-MS-04A	Turbine Building
Service Air Dryer Package B	CAS-MS-04B	Turbine Building
High Pressure Air Compressor and Filter Package	CAS-MS-05	Turbine Building
Instrument Air Receiver A	CAS-MT-01A	Turbine Building
Instrument Air Receiver B	CAS-MT-01B	Turbine Building
Service Air Receiver	CAS-MT-02	Turbine Building

2.3.16 Potable Water System

No entry for this system.

2.3.17 Waste Water System

No entry for this system.

2.3.18 Plant Gas System

No entry. Covered in Section 3.3, Buildings.

2.3.19 Communication System

Design Description

The communication system (EFS) provides intraplant communications during normal, maintenance, transient, fire, and accident conditions, including loss of offsite power.

1. a) The EFS has handsets, amplifiers, loudspeakers, and siren tone generators connected as a telephone/page system.

   b) The EFS has sound-powered equipment connected as a system.

2. The EFS provides the following nonsafety-related functions:

   a) The EFS telephone/page system provides intraplant, station-to-station communications and area broadcasting between the main control room (MCR) and the locations listed in Table 2.3.19-1.

   b) The EFS provides sound-powered communications between the MCR, the remote shutdown workstation (RSW), the Division A, B, C, D dc equipment rooms (Rooms 12201/12203/12205/12207), the Division A, B, C, D I&C rooms (Rooms 12301/12302/12304/12305), and the diesel generator building (Rooms 60310/60320) without external power.

Inspections, Tests, Analyses, and Acceptance Criteria

Table 2.3.19-2 specifies the inspections, tests, analyses, and associated acceptance criteria for the EFS.

Table 2.3.19-1

Telephone/Page System Equipment	Location
Fuel Handling Area	12562
Division A, B, C, D dc Equipment Rooms	12201/12203/12205/12207
Division A, B, C, D I&C Rooms	12301/12302/12304/12305
Maintenance Floor Staging Area	12351
Containment Maintenance Floor	11300
Containment Operating Deck	11500

Table 2.3.19-2
Inspections, Tests, Analyses, and Acceptance Criteria

Design Commitment	Inspections, Tests, Analyses	Acceptance Criteria
1.a) The EFS has handsets, amplifiers, loudspeakers, and siren tone generators connected as a telephone/page system.	Inspection of the as-built system will be performed.	The as-built EFS has handsets, amplifiers, loudspeakers, and siren tone generators connected as a telephone/page system.
1.b) The EFS has sound-powered equipment connected as a system.	Inspection of the as-built system will be performed.	The as-built EFS has sound-powered equipment connected as a system.
2.a) The EFS telephone/page system provides intraplant, station-to-station communications and area broadcasting between the MCR and the locations listed in Table 2.3.19-1.	An inspection and test will be performed on the telephone/page communication equipment.	Telephone/page equipment is installed and voice transmission and reception from the MCR are accomplished.
2.b) EFS provides sound-powered communications between the MCR, the RSW, the Division A, B, C, D dc equipment rooms (Rooms 12201/12203/12205/12207), the Division A, B, C, D I&C rooms (Rooms 12301/12302/12304/12305), and the diesel generator building (Rooms 60310/60320) without external power.	An inspection and test will be performed of the sound-powered communication equipment.	Sound-powered equipment is installed and voice transmission and reception are accomplished.

2.3.20 Turbine Building Closed Cooling Water System

No entry for this system.

2.3.21 Secondary Sampling System

No entry for this system.

2.3.22 Containment Leak Rate Test System

No entry. Covered in Section 2.2.1, Containment System.

2.3.23 This section intentionally blank

2.3.24 Demineralized Water Treatment System

No entry for this system.

2.3.25 Gravity and Roof Drain Collection System

No entry for this system.

2.3.26 This section intentionally blank

2.3.27 Sanitary Drainage System

No entry for this system.

2.3.28 Turbine Island Vents, Drains, and Relief System

No entry for this system.

2.3.29 Radioactive Waste Drain System

Design Description

The radioactive waste drain system (WRS) collects radioactive and potentially radioactive liquid wastes from equipment and floor drains during normal operation, startup, shutdown, and refueling. The liquid wastes are then transferred to appropriate processing and disposal systems.

Nonradioactive wastes are collected by the waste water system (WWS). The WRS is as shown in Figure 2.3.29-1.

1. The functional arrangement of the WRS is as described in the Design Description of this Section 2.3.29.

2. The WRS collects liquid wastes from the equipment and floor drainage of the radioactive portions of the auxiliary building, annex building, and radwaste building and directs these wastes to a WRS sump or WLS waste holdup tanks located in the auxiliary building.

3. The WRS collects chemical wastes from the auxiliary building chemical laboratory drains and the decontamination solution drains in the annex building and directs these wastes to the chemical waste tank of the liquid radwaste system.

4. The WWS stops the discharge from the turbine building sump upon detection of high radiation in the discharge stream to the oil separator.

Table 2.3.29-1
Inspection, Tests, Analyses and Acceptance Criteria

Design Commitment	Inspection, Tests, Analyses	Acceptance Criteria
1. The functional arrangement of the WRS is as described in the Design Description of this Section 2.3.29.	Inspection of the as-built system will be performed.	The as-built WRS conforms with the functional arrangement as described in the Design Description of this Section 2.3.29.
2. The WRS collects liquid wastes from the equipment and floor drainage of the radioactive portions of the auxiliary building, annex building, and radwaste building and directs these wastes to a WRS sump or WLS waste holdup tanks located in the auxiliary building.	A test is performed by pouring water into the equipment and floor drains in the radioactive portions of the auxiliary building, annex building, and radwaste building.	The water poured into these drains is collected either in the auxiliary building radioactive drains sump or the WLS waste holdup tanks.
3. The WRS collects chemical wastes from the auxiliary building chemical laboratory drains and the decontamination solution drains in the annex building and directs these wastes to the chemical waste tank of the liquid radwaste system.	A test is performed by pouring water into the auxiliary building chemical laboratory and the decontamination solution drains in the annex building.	The water poured into these drains is collected in the chemical waste tank of the liquid radwaste system.
4. The WWS stops the discharge from the turbine building sump upon detection of high radiation in the discharge stream to the oil separator.	Tests will be performed to confirm that a simulated high radiation signal from the turbine building sump discharge radiation monitor, WWS-021 causes the sump pumps (WWS-MP-01A and B) to stop operating, stopping the spread of radiation outside of the turbine building.	A simulated high radiation signal causes the turbine building sump pumps (WWS-MP-01A and B) to stop operating, stopping the spread of radiation outside of the turbine building.

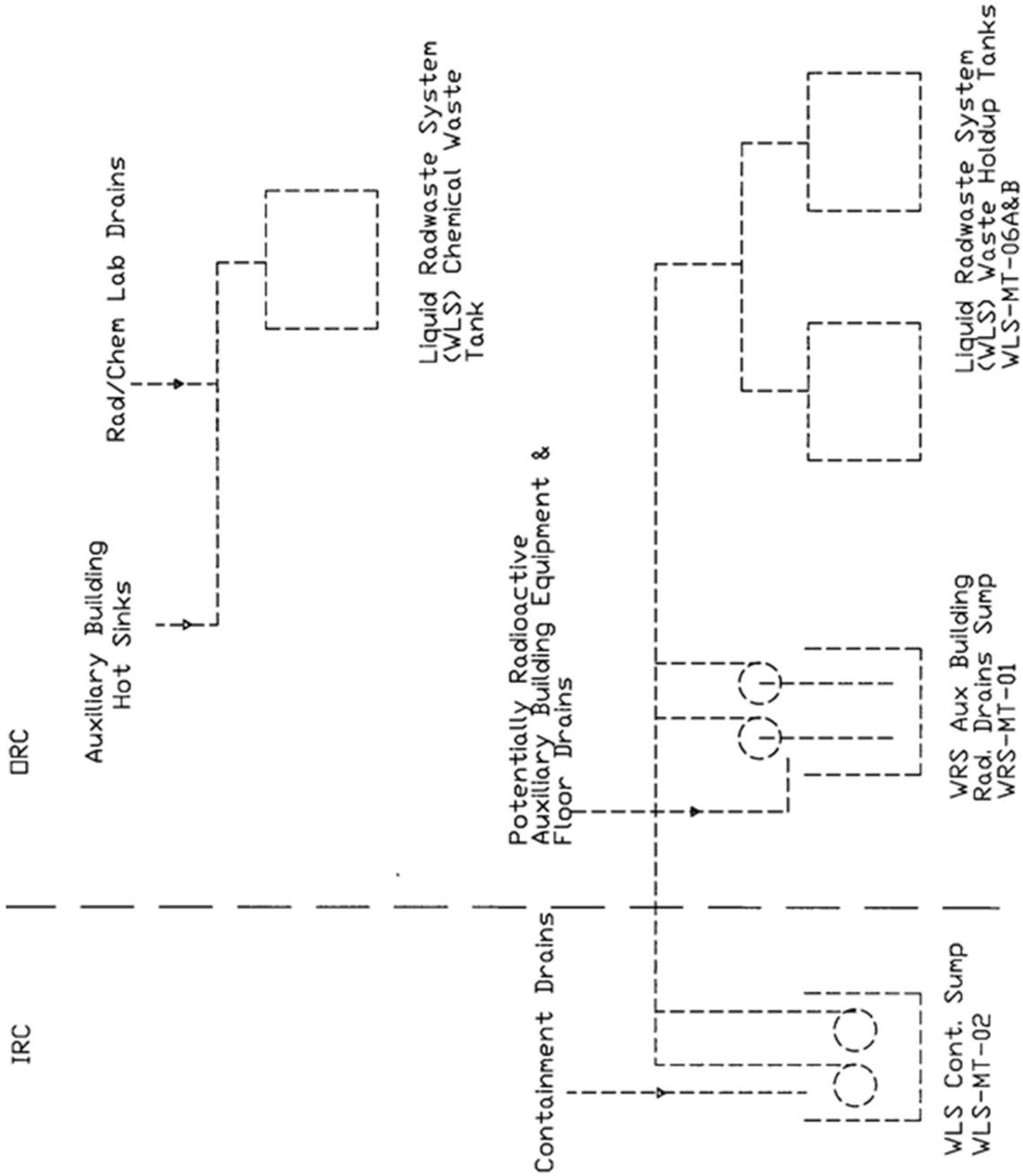

Figure 2.3.29-1
Radioactive Waste Drain System

2.4 Steam and Power Conversion Systems

2.4.1 Main and Startup Feedwater System

See Section 2.2.4 for information on the main feedwater system.

Design Description

The startup feedwater system supplies feedwater to the steam generators during plant startup, hot standby and shutdown conditions, and during transients in the event of main feedwater system unavailability.

1. The functional arrangement of the startup feedwater system is as described in the Design Description of this Section 2.4.1.

2. The FWS provides the following nonsafety-related functions:

   The FWS provides startup feedwater flow from the condensate storage tank (CST) to the steam generator system (SGS) for heat removal from the RCS.

3. Controls exist in the main control room (MCR) to cause the components identified in Table 2.4.1-1 to perform the listed function.

4. Displays of the parameters identified in Table 2.4.1-1 can be retrieved in the MCR.

Inspections, Tests, Analyses, and Acceptance Criteria

Table 2.4.1-2 specifies the inspections, tests, analyses, and associated acceptance criteria for the FWS.

Table 2.4.1-1

Equipment Name	Tag No.	Display	Control Function
Startup Feedwater Pump A (Motor)	FWS-MP-03A	Yes (Run Status)	Start
Startup Feedwater Pump B (Motor)	FWS-MP-03B	Yes (Run Status)	Start
Startup Feedwater Pump A Isolation Valve	FWS-PL-V013A	Yes (Valve Position)	Open
Startup Feedwater Pump B Isolation Valve	FWS-PL-V013B	Yes (Valve Position)	Open

Table 2.4.1-2
Inspections, Tests, Analyses, and Acceptance Criteria

Design Commitment	Inspections, Tests, Analyses	Acceptance Criteria
1. The functional arrangement of the startup feedwater system is as described in the Design Description of this Section 2.4.1.	Inspection of the as-built system will be performed.	The as-built startup feedwater system conforms with the functional arrangement as described in the Design Description of this Section 2.4.1.
2. The FWS provides startup feedwater flow from the CST to the SGS for heat removal from the RCS.	Testing will be performed to confirm that each of the startup feedwater pumps can provide water from the CST to both steam generators.	Each FWS startup feedwater pump provides a flow rate greater than or equal to 260 gpm to each steam generator system at a steam generator secondary side pressure of at least 1106 psia.
3. Controls exist in the MCR to cause the components identified in Table 2.4.1-1 to perform the listed function.	Testing will be performed on the components in Table 2.4.1-1 using controls in the MCR.	Controls in the MCR operate to cause the components listed in Table 2.4.1-1 to perform the listed functions.
4. Displays of the parameters identified in Table 2.4.1-1 can be retrieved in the MCR.	Inspection will be performed for retrievability of parameters in the MCR.	The displays identified in Table 2.4.1-1 can be retrieved in the MCR.

Table 2.4.1-3

Component Name	Tag No.	Component Location
Startup Feedwater Pump A	FWS-MP-03A	Turbine Building
Startup Feedwater Pump B	FWS-MP-03B	Turbine Building

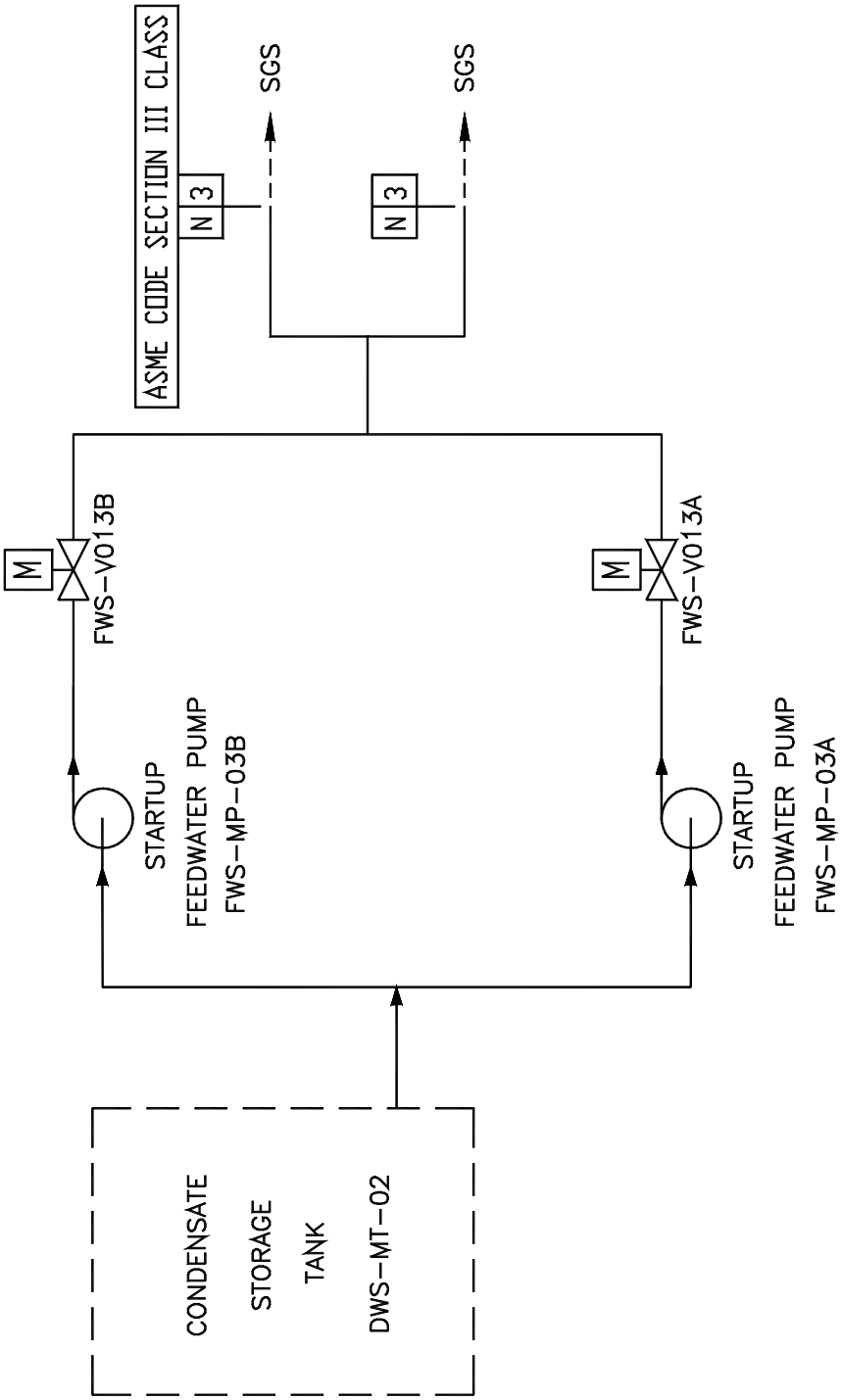

Figure 2.4.1-1
Main and Startup Feedwater System

2.4.2 Main Turbine System

Design Description

The main turbine system (MTS) is designed for electric power production consistent with the capability of the reactor and the reactor coolant system.

The component locations of the MTS are as shown in Table 2.4.2-2.

1. The functional arrangement of the MTS is as described in the Design Description of this Section 2.4.2.

2. a) Controls exist in the MCR to trip the main turbine-generator.

   b) The main turbine-generator trips after receiving a signal from the PMS.

   c) The main turbine-generator trips after receiving a signal from the DAS.

3. The overspeed trips for the AP1000 turbine are set for 110% and 111% (±1% each). Each trip is initiated electrically in separate systems. The trip signals from the two turbine electrical overspeed protection trip systems are isolated from, and independent of, each other.

Inspections, Tests, Analyses, and Acceptance Criteria

Table 2.4.2-1 specifies the inspections, tests, analyses, and associated acceptance criteria for the MTS.

Table 2.4.2-1
Inspections, Tests, Analyses, and Acceptance Criteria

Design Commitment	Inspections, Test, Analyses	Acceptance Criteria
1. The functional arrangement of the MTS is as described in the Design Description of this Section 2.4.2.	Inspection of the as-built system will be performed.	The as-built MTS conforms with the functional arrangement as described in the Design Description of this Section 2.4.2.
2.a) Controls exist in the MCR to trip the main turbine-generator.	Testing will be performed on the main turbine-generator using controls in the MCR.	Controls in the MCR operate to trip the main turbine-generator.
2.b) The main turbine-generator trips after receiving a signal from the PMS.	Testing will be performed using real or simulated signals into the PMS.	The main turbine-generator trips after receiving a signal from the PMS.
2.c) The main turbine-generator trips after receiving a signal from the DAS.	Testing will be performed using real or simulated signals into the DAS.	The main turbine-generator trips after receiving a signal from the DAS.
3) The trip signals from the two turbine electrical overspeed protection trip systems are isolated from, and independent of, each other.	i) The system design will be reviewed. ii) Testing of the as-built system will be performed using simulated signals from the turbine speed sensors. iii) Inspection will be performed for the existence of a report verifying that the two turbine electrical overspeed protection systems have diverse hardware and software/firmware.	i) The system design review shows that the trip signals of the two electrical overspeed protection trip systems are isolated from, and independent of, each other. ii) The main turbine-generator trips after overspeed signals are received from the speed sensors of the 110% emergency electrical overspeed trip system, and the main turbine-generator trips after overspeed signals are received from the speed sensors of the 111% backup electrical overspeed trip system. iii) A report exists and concludes that the two electrical overspeed protection systems have diverse hardware and software/firmware.

Table 2.4.2-2

Component Name	Tag No.	Component Location
HP Turbine	MTS-MG-01	Turbine Building
LP Turbine A	MTS-MG-02A	Turbine Building
LP Turbine B	MTS-MG-02B	Turbine Building
LP Turbine C	MTS-MG-02C	Turbine Building
Gland Steam Condenser	GSS-ME-01	Turbine Building
Gland Condenser Vapor Exhauster 1A	GSS-MA-01A	Turbine Building
Gland Condenser Vapor Exhauster 1B	GSS-MA-01B	Turbine Building
Electrical Overspeed Trip Device	--	Turbine Building
Emergency Electrical Overspeed Trip Device	--	Turbine Building

2.4.3 Main Steam System

No entry. Covered in Section 2.2.4, Steam Generator System.

2.4.4 Steam Generator Blowdown System

No entry. Containment isolation function covered in Section 2.2.1, Containment System and 2.2.4, Steam Generator System.

No entry. Steam generator isolation function covered in Section 2.2.4, Steam Generator System.

2.4.5 Condenser Air Removal System

No entry. Covered in Section 3.5, Radiation Monitoring.
(Note: Monitor is TDS-RE001.)

2.4.6 Condensate System

Design Description

The condensate system (CDS) provides feedwater at the required temperature, pressure, and flow rate to the deaerator. Condensate is pumped from the main condenser hotwell by the condensate pumps and passes through the low-pressure feedwater heaters to the deaerator. The circulating water system (CWS) removes heat from the condenser and is site specific starting from the interface at the locations where the CWS piping enters and exits the turbine building.

The CDS operates during plant startup and power operations (full and part loads).

The component locations of the CDS are as shown in Table 2.4.6-3.

1. The functional arrangement of the CDS is as described in the Design Description of this Section 2.4.6.

2. Displays of the parameters identified in Table 2.4.6-1 can be retrieved in the main control room (MCR).

Inspections, Tests, Analyses, and Acceptance Criteria

Table 2.4.6-2 specifies the inspections, tests, analyses, and associated acceptance criteria for the CDS.

Table 2.4.6-1

Equipment Name	Tag No.	Display
Condenser Backpressure	CDS-056A	Yes
Condenser Backpressure	CDS-056B	Yes
Condenser Backpressure	CDS-056C	Yes

Table 2.4.6-2
Inspections, Tests, Analyses, and Acceptance Criteria

Design Commitment	Inspections, Tests, Analyses	Acceptance Criteria
1. The functional arrangement of the CDS is as described in the Design Description of this Section 2.4.6.	Inspection of the as-built system will be performed.	The as-built CDS conforms with the functional arrangement as described in the Design Description of Section 2.4.6.
2. Displays of the parameters identified in Table 2.4.6-1 can be retrieved in the MCR.	Inspection will be performed for retrievability of the parameters in the MCR.	The displays identified in Table 2.4.6-1 can be retrieved in the MCR.

Table 2.4.6-3

Component Name	Component Location
Low Pressure Feedwater Heaters	Turbine Building
Deaerator Feedwater Heater and Storage Tank	Turbine Building
Main Condenser Shell A	Turbine Building
Main Condenser Shell B	Turbine Building
Main Condenser Shell C	Turbine Building
Condensate Pump A	Turbine Building
Condensate Pump B	Turbine Building
Condensate Pump C	Turbine Building

2.4.7 Circulating Water System

No entry for this system.

2.4.8 Auxiliary Steam Supply System

No entry for this system.

2.4.9 Condenser Tube Cleaning System

No entry for this system.

2.4.10 Turbine Island Chemical Feed System

No entry for this system.

2.4.11 Condensate Polishing System

No entry for this system.

2.4.12 Gland Seal System

No entry. Covered in Section 2.4.2, Main Turbine System.

2.4.13 Generator Hydrogen and CO_2 System

No entry for this system.

2.4.14 Heater Drain System

No entry for this system.

2.4.15 Hydrogen Seal Oil System

No entry for this system.

2.4.16 Main Turbine and Generator Lube Oil System

No entry for this system.

2.5 Instrumentation and Control Systems

2.5.1 Diverse Actuation System

Design Description

The diverse actuation system (DAS) initiates reactor trip, actuates selected functions, and provides plant information to the operator.

The component locations of the DAS are as shown in Table 2.5.1-5.

1. The functional arrangement of the DAS is as described in the Design Description of this Section 2.5.1.

2. The DAS provides the following nonsafety-related functions:

   a) The DAS provides an automatic reactor trip on low wide-range steam generator water level, or on low pressurizer water level, or on high hot leg temperature, separate from the PMS.

   b) The DAS provides automatic actuation of selected functions, as identified in Table 2.5.1-1, separate from the PMS.

   c) The DAS provides manual initiation of reactor trip and selected functions, as identified in Table 2.5.1-2, separate from the PMS. These manual initiation functions are implemented in a manner that bypasses the control room multiplexers, if any; the PMS cabinets; and the signal processing equipment of the DAS.

   d) The DAS provides main control room (MCR) displays of selected plant parameters, as identified in Table 2.5.1-3, separate from the PMS.

3. The DAS has the following features:

   a) The signal processing hardware of the DAS uses input modules, output modules, and microprocessor or special purpose logic processor boards that are different than those used in the PMS.

   b) The display hardware of the DAS uses a different display device than that used in the PMS.

   c) Software diversity between DAS and PMS will be achieved through the use of different algorithms, logic, program architecture, executable operating system, and executable software/logic.

   d) The DAS has electrical surge withstand capability (SWC), and can withstand the electromagnetic interference (EMI), radio frequency (RFI), and electrostatic discharge (ESD) conditions that exist where the DAS equipment is located in the plant.

   e) The sensors identified on Table 2.5.1-3 are used for DAS input and are separate from those being used by the PMS and plant control system.

f) The DAS is powered by non-Class 1E uninterruptible power supplies that are independent and separate from the power supplies which power the PMS.

g) The DAS signal processing cabinets are provided with the capability for channel testing without actuating the controlled components.

h) The DAS equipment can withstand the room ambient temperature and humidity conditions that will exist at the plant locations in which the DAS equipment is installed at the times for which the DAS is designed to be operational.

4. The DAS hardware and any software are developed using a planned design process which provides for specific design documentation and reviews during the following life cycle stages:

   a) Development phase for hardware and any software
   b) System test phase
   c) Installation phase

The planned design process also provides for the use of commercial off-the-shelf hardware and software.

5. The DAS manual actuation of ADS, IRWST injection, and containment recirculation can be executed correctly and reliably.

Inspections, Tests, Analyses, and Acceptance Criteria

Table 2.5.1-4 specifies the inspections, tests, analyses, and associated acceptance criteria for the DAS.

Table 2.5.1-1
Functions Automatically Actuated by the DAS

1. Reactor and Turbine Trip on Low Wide-range Steam Generator Water Level or Low Pressurizer Water Level or High Hot Leg Temperature
2. Passive Residual Heat Removal (PRHR) Actuation and In-containment Refueling Water Storage Tank (IRWST) Gutter Isolation on Low Wide-range Steam Generator Water Level or on High Hot Leg Temperature
3. Core Makeup Tank (CMT) Actuation and Trip All Reactor Coolant Pumps on Low Wide-Range Steam Generator Water Level or Low Pressurizer Water Level
4. Isolation of Selected Containment Penetrations and Initiation of Passive Containment Cooling System (PCS) on High Containment Temperature

Table 2.5.1-2
Functions Manually Actuated by the DAS

1. Reactor and Turbine Trip
2. PRHR Actuation and IRWST Gutter Isolation
3. CMT Actuation and Trip All Reactor Coolant Pumps
4. First-stage Automatic Depressurization System (ADS) Valve Actuation
5. Second-stage ADS Valve Actuation
6. Third-stage ADS Valve Actuation
7. Fourth-stage ADS Valve Actuation
8. PCS Actuation
9. Isolation of Selected Containment Penetrations
10. Containment Hydrogen Ignitor Actuation
11. IRWST Injection Actuation
12. Containment Recirculation Actuation
13. Actuate IRWST Drain to Containment

Table 2.5.1-3
DAS Sensors and Displays

Equipment Name	Tag Number
Reactor Coolant System (RCS) Hot Leg Temperature	RCS-300A
RCS Hot Leg Temperature	RCS-300B
Steam Generator 1 Wide-range Level	SGS-044
Steam Generator 1 Wide-range Level	SGS-045
Steam Generator 2 Wide-range Level	SGS-046
Steam Generator 2 Wide-range Level	SGS-047
Pressurizer Water Level	RCS-305A
Pressurizer Water Level	RCS-305B
Containment Temperature	VCS-053A
Containment Temperature	VCS-053B
Core Exit Temperature	IIS-009
Core Exit Temperature	IIS-013
Core Exit Temperature	IIS-030
Core Exit Temperature	IIS-034
Rod Control Motor Generator Voltage	PLS-ET001
Rod Control Motor Generator Voltage	PLS-ET002

Table 2.5.1-4
Inspections, Tests, Analyses, and Acceptance Criteria

Design Commitment	Inspections, Tests, Analyses	Acceptance Criteria
1. The functional arrangement of the DAS is as described in the Design Description of this Section 2.5.1.	Inspection of the as-built system will be performed.	The as-built DAS conforms with the functional arrangement as described in the Design Description of this Section 2.5.1.
2.a) The DAS provides an automatic reactor trip on low wide-range steam generator water level, or on low pressurizer water level, or on high hot leg temperature, separate from the PMS.	Electrical power to the PMS equipment will be disconnected and an operational test of the as-built DAS will be performed using real or simulated test signals.	The field breakers of the control rod motor-generator sets open after the test signal reaches the specified limit.
2.b) The DAS provides automatic actuation of selected functions, as identified in Table 2.5.1-1, separate from the PMS.	Electrical power to the PMS equipment will be disconnected and an operational test of the as-built DAS will be performed using real or simulated test signals.	Appropriate DAS output signals are generated after the test signal reaches the specified limit.
2.c) The DAS provides manual initiation of reactor trip, and selected functions, as identified in Table 2.5.1-2, separate from the PMS. These manual initiation functions are implemented in a manner that bypasses the control room multiplexers, if any; the PMS cabinets; and the signal processing equipment of the DAS.	Electrical power to the control room multiplexers, if any, and PMS equipment will be disconnected and the outputs from the DAS signal processing equipment will be disabled. While in this configuration, an operational test of the as-built system will be performed using the DAS manual actuation controls.	i) The field breakers of the control rod motor-generator sets open after reactor and turbine trip manual initiation controls are actuated. ii) DAS output signals are generated for the selected functions, as identified in Table 2.5.1-2, after manual initiation controls are actuated.
2.d) The DAS provides MCR displays of selected plant parameters, as identified in Table 2.5.1-3, separate from the PMS.	Electrical power to the PMS equipment will be disconnected and inspection will be performed for retrievability of the selected plant parameters in the MCR.	The selected plant parameters can be retrieved in the MCR.

Table 2.5.1-4 (cont.)
Inspections, Tests, Analyses, and Acceptance Criteria

Design Commitment	Inspections, Tests, Analyses	Acceptance Criteria
3.a) The signal processing hardware of the DAS uses input modules, output modules, and microprocessor or special purpose logic processor boards that are different than those used in the PMS.	Inspection of the as-built DAS and PMS signal processing hardware will be performed.	The DAS signal processing equipment uses input modules, output modules, and micro-processor or special purpose logic processor boards that are different than those used in the PMS. The difference may be a different design, use of different component types, or different manufacturers.
3.b) The display hardware of the DAS uses a different display device than that used in the PMS.	Inspection of the as-built DAS and PMS display hardware will be performed.	The DAS display hardware is different than the display hardware used in the PMS. The difference may be a different design, use of different component types, or different manufacturers.
3.c) Software diversity between the DAS and PMS will be achieved through the use of different algorithms, logic, program architecture, executable operating system, and executable software/logic.	Inspection of the DAS and PMS design documentation will be performed.	Any DAS algorithms, logic, program architecture, executable operating systems, and executable software/logic are different than those used in the PMS.
3.d) The DAS has electrical surge withstand capability (SWC), and can withstand the electromagnetic interference (EMI), radio frequency (RFI), and electrostatic discharge (ESD) conditions that exist where the DAS equipment is located in the plant.	Type tests, analyses, or a combination of type tests and analyses will be performed on the equipment.	A report exists and concludes that the DAS equipment can withstand the SWC, EMI, RFI and ESD conditions that exist where the DAS equipment is located in the plant.
3.e) The sensors identified on Table 2.5.1-3 are used for DAS input and are separate from those being used by the PMS and plant control system.	Inspection of the as-built system will be performed.	The sensors identified on Table 2.5.1-3 are used by DAS and are separate from those being used by the PMS and plant control system.
3.f) The DAS is powered by non-Class 1E uninterruptible power supplies that are independent and separate from the power supplies which power the PMS.	Electrical power to the PMS equipment will be disconnected. While in this configuration, a test will be performed by providing simulated test signals in the non-Class 1E uninterruptible power supplies.	A simulated test signal exists at the DAS equipment when the assigned non-Class 1E uninterruptible power supply is provided the test signal.

Table 2.5.1-4 (cont.)
Inspections, Tests, Analyses, and Acceptance Criteria

Design Commitment	Inspections, Tests, Analyses	Acceptance Criteria
3.g) The DAS signal processing cabinets are provided with the capability for channel testing without actuating the controlled components.	Channel tests will be performed on the as built system.	The capability exists for testing individual DAS channels without propagating an actuation signal to a DAS controlled component.
3.h) The DAS equipment can withstand the room ambient temperature and humidity conditions that will exist at the plant locations in which the DAS equipment is installed at the times for which the DAS is designed to be operational.	Type tests, analyses, or a combination of type tests and analyses will be performed on the equipment.	A report exists and concludes that the DAS equipment can withstand the room ambient temperature and humidity conditions that will exist at the plant locations in which the DAS equipment is installed at the times for which the DAS is designed to be operational.
4. The DAS hardware and any software are developed using a planned design process which provides for specific design documentation and reviews during the following life cycle stages: a) Development phase for hardware and any software b) System test phase c) Installation phase The planned design process also provides for the use of commercial off-the-shelf hardware and software.	Inspection will be performed of the process used to design the hardware and any software.	A report exists and concludes that the process defines the organizational responsibilities, activities, and configuration management controls for the following: a) Documentation and review of hardware and any software. b) Performance of tests and the documentation of test results during the system test phase. c) Performance of tests and inspections during the installation phase. The process also defines requirements for the use of commercial off-the-shelf hardware and software.
5. The DAS manual actuation of ADS, IRWST injection, and containment recirculation can be executed correctly and reliably.	See Tier 1 Material, Table 3.2-1, item 1.	See Tier 1 Material, Table 3.2-1, item 1.

Table 2.5.1-5

Component Name	Tag No.	Component Location
DAS Processor Cabinet 1	DAS-JD-001	Annex Building
DAS Processor Cabinet 2	DAS-JD-002	Annex Building
DAS Squib Valve Control Cabinet	DAS-JD-003	Auxiliary Building
DAS Instrument Cabinet	DAS-JD-004	Auxiliary Building

2.5.2 Protection and Safety Monitoring System

Design Description

The protection and safety monitoring system (PMS) initiates reactor trip and actuation of engineered safety features in response to plant conditions monitored by process instrumentation and provides safety-related displays. The PMS has the equipment identified in Table 2.5.2-1. The PMS has four divisions of Reactor Trip and Engineered Safety Features Actuation, and two divisions of safety-related post-accident parameter displays. The functional arrangement of the PMS is depicted in Figure 2.5.2-1 and the component locations of the PMS are as shown in Table 2.5.2-9.

1. The functional arrangement of the PMS is as described in the Design Description of this Section 2.5.2.

2. The seismic Category I equipment, identified in Table 2.5.2-1, can withstand seismic design basis loads without loss of safety function.

3. The Class 1E equipment, identified in Table 2.5.2-1, has electrical surge withstand capability (SWC), and can withstand the electromagnetic interference (EMI), radio frequency interference (RFI), and electrostatic discharge (ESD) conditions that would exist before, during, and following a design basis accident without loss of safety function for the time required to perform the safety function.

4. The Class 1E equipment, identified in Table 2.5.2-1, can withstand the room ambient temperature, humidity, pressure, and mechanical vibration conditions that would exist before, during, and following a design basis accident without loss of safety function for the time required to perform the safety function.

5. a) The Class 1E equipment, identified in Table 2.5.2-1, is powered from its respective Class 1E division.

   b) Separation is provided between PMS Class 1E divisions, and between Class 1E divisions and non-Class 1E cable.

6. The PMS provides the following safety-related functions:

   a) The PMS initiates an automatic reactor trip, as identified in Table 2.5.2-2, when plant process signals reach specified limits.

   b) The PMS initiates automatic actuation of engineered safety features, as identified in Table 2.5.2-3, when plant process signals reach specified limits.

   c) The PMS provides manual initiation of reactor trip and selected engineered safety features as identified in Table 2.5.2-4.

7. The PMS provides the following nonsafety-related functions:

   a) The PMS provides process signals to the plant control system (PLS) through isolation devices.

b) The PMS provides process signals to the data display and processing system (DDS) through isolation devices.

c) Data communication between safety and nonsafety systems does not inhibit the performance of the safety function.

d) The PMS ensures that the automatic safety function and the Class 1E manual controls both have priority over the non-Class 1E soft controls.

e) The PMS receives signals from non-safety equipment that provides interlocks for PMS test functions through isolation devices.

8. The PMS, in conjunction with the operator workstations, provides the following functions:

a) The PMS provides for the minimum inventory of displays, visual alerts, and fixed position controls, as identified in Table 2.5.2-5. The plant parameters listed with a "Yes" in the "Display" column and visual alerts listed with a "Yes" in the "Alert" column can be retrieved in the main control room (MCR). The fixed position controls listed with a "Yes" in the "Control" column are provided in the MCR.

b) The PMS provides for the transfer of control capability from the MCR to the remote shutdown workstation (RSW) using multiple transfer switches. Each individual transfer switch is associated with only a single safety-related group or with nonsafety-related control capability.

c) Displays of the open/closed status of the reactor trip breakers can be retrieved in the MCR.

9. a) The PMS automatically removes blocks of reactor trip and engineered safety features actuation when the plant approaches conditions for which the associated function is designed to provide protection. These blocks are identified in Table 2.5.2-6.

b) The PMS two-out-of-four initiation logic reverts to a two-out-of-three coincidence logic if one of the four channels is bypassed. All bypassed channels are alarmed in the MCR.

c) The PMS does not allow simultaneous bypass of two redundant channels.

d) The PMS provides the interlock functions identified in Table 2.5.2-7.

10. Setpoints are determined using a methodology which accounts for loop inaccuracies, response testing, and maintenance or replacement of instrumentation.

11. The PMS hardware and software is developed using a planned design process which provides for specific design documentation and reviews during the following life cycle stages:

a) Design requirements phase, may be referred to as conceptual or project definition phase (Complete)

b) System definition phase

c) Hardware and software development phase, consisting of hardware and software design and implementation

d) System integration and test phase

e) Installation phase

12. The PMS software is designed, tested, installed, and maintained using a process which incorporates a graded approach according to the relative importance of the software to safety and specifies requirements for:

    a) Software management including documentation requirements, standards, review requirements, and procedures for problem reporting and corrective action.

    b) Software configuration management including historical records of software and control of software changes.

    c) Verification and validation including requirements for reviewer independence.

13. The use of commercial grade hardware and software items in the PMS is accomplished through a process that specifies requirements for:

    a) Review of supplier design control, configuration management, problem reporting, and change control.

    b) Review of product performance.

    c) Receipt acceptance of the commercial grade item.

    d) Final acceptance based on equipment qualification and software validation in the integrated system.

14. The Component Interface Module CIM) is developed using a planned design process which provides for specific design documentation and reviews.

Inspections, Tests, Analyses, and Acceptance Criteria

Table 2.5.2-8 specifies the inspections, tests, analyses, and associated acceptance criteria for the PMS.

Table 2.5.2-1
PMS Equipment Name and Classification

Equipment Name	Seismic Cat. I	Class 1E	Qual. for Harsh Envir.
PMS Cabinets, Division A	Yes	Yes	No
PMS Cabinets, Division B	Yes	Yes	No
PMS Cabinets, Division C	Yes	Yes	No
PMS Cabinets, Division D	Yes	Yes	No
Reactor Trip Switchgear, Division A	Yes	Yes	No
Reactor Trip Switchgear, Division B	Yes	Yes	No
Reactor Trip Switchgear, Division C	Yes	Yes	No
Reactor Trip Switchgear, Division D	Yes	Yes	No
MCR/RSW Transfer Panels	Yes	Yes	No
MCR Safety-related Display, Division B	Yes	Yes	No
MCR Safety-related Display, Division C	Yes	Yes	No
MCR Safety-related Controls	Yes	Yes	No

Table 2.5.2-2
PMS Automatic Reactor Trips

Source Range High Neutron Flux Reactor Trip
Intermediate Range High Neutron Flux Reactor Trip
Power Range High Neutron Flux (Low Setpoint) Trip
Power Range High Neutron Flux (High Setpoint) Trip
Power Range High Positive Flux Rate Trip
Reactor Coolant Pump High Bearing Water Temperature Trip
Overtemperature Delta-T Trip
Overpower Delta-T Trip
Pressurizer Low Pressure Trip
Pressurizer High Pressure Trip
Pressurizer High Water Level Trip
Low Reactor Coolant Flow Trip
Low Reactor Coolant Pump Speed Trip
Low Steam Generator Water Level Trip
High-2 Steam Generator Water Level Trip
Automatic or Manual Safeguards Actuation Trip
Automatic or Manual Depressurization System Actuation Trip
Automatic or Manual Core Makeup Tank (CMT) Injection Trip
Passive Residual Heat Removal (PRHR) Actuation Reactor Trip

Table 2.5.2-3
PMS Automatically Actuated Engineered Safety Features

Safeguards Actuation
Containment Isolation
Automatic Depressurization System (ADS) Actuation
Main Feedwater Isolation
Reactor Coolant Pump Trip
CMT Injection
Turbine Trip (Isolated signal to nonsafety equipment)
Steam Line Isolation
Steam Generator Relief Isolation
Steam Generator Blowdown Isolation
Passive Containment Cooling Actuation
Startup Feedwater Isolation
Passive Residual Heat Removal (PRHR) Heat Exchanger Alignment
Block of Boron Dilution
Chemical and Volume Control System (CVS) Makeup Line Isolation
Steam Dump Block (Isolated signal to nonsafety equipment)
Main Control Room Isolation, Air Supply Initiation and Electrical Load De-energization
Auxiliary Spray and Letdown Purification Line Isolation
Containment Air Filtration System Isolation
Normal Residual Heat Removal Isolation
Refueling Cavity Isolation
In-Containment Refueling Water Storage Tank (IRWST) Injection
IRWST Containment Recirculation
CVS Letdown Isolation
Pressurizer Heater Block (Isolated signal to nonsafety equipment)
Containment Vacuum Relief

Table 2.5.2-4
PMS Manually Actuated Functions

Reactor Trip
Safeguards Actuation
Containment Isolation
Depressurization System Stages 1, 2, and 3 Actuation
Depressurization System Stage 4 Actuation
Feedwater Isolation
Core Makeup Tank Injection Actuation
Steam Line Isolation
Passive Containment Cooling Actuation
Passive Residual Heat Removal Heat Exchanger Alignment
IRWST Injection
Containment Recirculation Actuation
Main Control Room Isolation, Air Supply Initiation and Electrical Load De-energization
Steam Generator Relief Isolation
Chemical and Volume Control System Isolation
Normal Residual Heat Removal System Isolation
Containment Vacuum Relief

Table 2.5.2-5
Minimum Inventory of Displays, Alerts, and Fixed Position Controls in the MCR

Description	Control	Display	Alert(1)
Neutron Flux	-	Yes	Yes
Neutron Flux Doubling(2)	-	No	Yes
Startup Rate	-	Yes	Yes
Reactor Coolant System (RCS) Pressure	-	Yes	Yes
Wide-range Hot Leg Temperature	-	Yes	No
Wide-range Cold Leg Temperature	-	Yes	Yes
RCS Cooldown Rate Compared to the Limit Based on RCS Pressure	-	Yes	Yes
Wide-range Cold Leg Temperature Compared to the Limit Based on RCS Pressure	-	Yes	Yes
Change of RCS Temperature by more than 5°F in the last 10 minutes	-	No	Yes
Containment Water Level	-	Yes	Yes
Containment Pressure	-	Yes	Yes
Pressurizer Water Level	-	Yes	Yes
Pressurizer Water Level Trend	-	Yes	No
Pressurizer Reference Leg Temperature	-	Yes	No
Reactor Vessel-Hot Leg Water Level	-	Yes	Yes
Pressurizer Pressure	-	Yes	No
Core Exit Temperature	-	Yes	Yes
RCS Subcooling	-	Yes	Yes
RCS Cold Overpressure Limit	-	Yes	Yes
IRWST Water Level	-	Yes	Yes
PRHR Flow	-	Yes	Yes
PRHR Outlet Temperature	-	Yes	Yes

Note: Dash (-) indicates not applicable.

1. These parameters are used to generate visual alerts that identify challenges to the critical safety functions. For the main control room, the visual alerts are embedded in the safety-related displays as visual signals.

Table 2.5.2-5 (cont.)
Minimum Inventory of Displays, Alerts, and Fixed Position Controls in the MCR

Description	Control	Display	Alert(1)
Passive Containment Cooling System (PCS) Storage Tank Water Level	-	Yes	No
PCS Cooling Flow	-	Yes	No
IRWST to Normal Residual Heat Removal System (RNS) Suction Valve Status(2)	-	Yes	Yes
Remotely Operated Containment Isolation Valve Status(2)	-	Yes	No
Containment Area High-range Radiation Level	-	Yes	Yes
Containment Pressure (Extended Range)	-	Yes	No
CMT Level	-	Yes	No
Manual Reactor Trip (also initiates turbine trip)	Yes	-	-
Manual Safeguards Actuation	Yes	-	-
Manual CMT Actuation	Yes	-	-
Manual MCR Emergency Habitability System Actuation	Yes	-	-
Manual ADS Stages 1, 2, and 3 Actuation	Yes	-	-
Manual ADS Stage 4 Actuation	Yes	-	-
Manual PRHR Actuation	Yes	-	-
Manual Containment Cooling Actuation	Yes	-	-
Manual IRWST Injection Actuation	Yes	-	-
Manual Containment Recirculation Actuation	Yes	-	-
Manual Containment Isolation	Yes	-	-
Manual Main Steam Line Isolation	Yes	-	-
Manual Feedwater Isolation	Yes	-	-
Manual Containment Hydrogen Igniter (Nonsafety-related)	Yes	-	-
Manual Containment Vacuum Relief	Yes		

Note: Dash (-) indicates not applicable.

2. These instruments are not required after 24 hours.

Table 2.5.2-6
PMS Blocks

Reactor Trip Functions:
Source Range High Neutron Flux Reactor Trip
Intermediate Range High Neutron Flux Reactor Trip
Power Range High Neutron Flux (Low Setpoint) Trip
Pressurizer Low Pressure Trip
Pressurizer High Water Level Trip
Low Reactor Coolant Flow Trip
Low Reactor Coolant Pump Speed Trip
High Steam Generator Water Level Trip
Engineered Safety Features:
Automatic Safeguards
Containment Isolation
Main Feedwater Isolation
Reactor Coolant Pump Trip
Core Makeup Tank Injection
Steam Line Isolation
Startup Feedwater Isolation
Block of Boron Dilution
Chemical and Volume Control System Isolation
Chemical and Volume Control System Letdown Isolation
Steam Dump Block
Auxiliary Spray and Letdown Purification Line Isolation
Passive Residual Heat Removal Heat Exchanger Alignment
Normal Residual Heat Removal System Isolation

Table 2.5.2-7
PMS Interlocks

RNS Suction Valves
PRHR Heat Exchanger Inlet Isolation Valve
CMT Cold Leg Balance Line Isolation Valves
Containment Vacuum Relief Isolation Valves

Table 2.5.2-8
Inspections, Tests, Analyses, and Acceptance Criteria

Design Commitment	Inspections, Tests, Analyses	Acceptance Criteria
1. The functional arrangement of the PMS is as described in the Design Description of this Section 2.5.2.	Inspection of the as-built system will be performed.	The as-built PMS conforms with the functional arrangement as described in the Design Description of this Section 2.5.2.
2. The seismic Category I equipment, identified in Table 2.5.2-1, can withstand seismic design basis loads without loss of safety function.	i) Inspection will be performed to verify that the seismic Category I equipment identified in Table 2.5.2-1 is located on the Nuclear Island. ii) Type tests, analyses, or a combination of type tests and analyses of seismic Category I equipment will be performed. iii) Inspection will be performed for the existence of a report verifying that the as-built equipment including anchorage is seismically bounded by the tested or analyzed conditions.	i) The seismic Category I equipment identified in Table 2.5.2-1 is located on the Nuclear Island. ii) A report exists and concludes that the seismic Category I equipment can withstand seismic design basis loads without loss of safety function. iii) A report exists and concludes that the as-built equipment including anchorage is seismically bounded by the tested or analyzed conditions.
3. The Class 1E equipment, identified in Table 2.5.2-1, has electrical surge withstand capability (SWC), and can withstand the electromagnetic interference (EMI), radio frequency interference (RFI), and electrostatic discharge (ESD) conditions that would exist before, during, and following a design basis accident without loss of safety function for the time required to perform the safety function.	Type tests, analyses, or a combination of type tests and analyses will be performed on the equipment.	A report exists and concludes that the Class 1E equipment identified in Table 2.5.2-1 can withstand the SWC, EMI, RFI, and ESD conditions that would exist before, during, and following a design basis accident without loss of safety function for the time required to perform the safety function.

Table 2.5.2-8 (cont.)
Inspections, Tests, Analyses, and Acceptance Criteria

Design Commitment	Inspections, Tests, Analyses	Acceptance Criteria
4. The Class 1E equipment, identified in Table 2.5.2-1, can withstand the room ambient temperature, humidity, pressure, and mechanical vibration conditions that would exist before, during, and following a design basis accident without loss of safety function for the time required to perform the safety function.	Type tests, analyses, or a combination of type tests and analyses will be performed on the Class 1E equipment identified in Table 2.5.2-1.	A report exists and concludes that the Class 1E equipment identified in Table 2.5.2-1 can withstand the room ambient temperature, humidity, pressure, and mechanical vibration conditions that would exist before, during, and following a design basis accident without loss of safety function for the time required to perform the safety function.
5.a) The Class 1E equipment, identified in Table 2.5.2-1, is powered from its respective Class 1E division.	Tests will be performed by providing a simulated test signal in each Class 1E division.	A simulated test signal exists at the Class 1E equipment identified in Table 2.5.2-1 when the assigned Class 1E division is provided the test signal.
5.b) Separation is provided between PMS Class 1E divisions, and between Class 1E divisions and non-Class 1E cable.	See Tier 1 Material, Table 3.3-6, items 7.d and 7.e.	See Tier 1 Material, Table 3.3-6, items 7.d and 7.e.
6.a) The PMS initiates an automatic reactor trip, as identified in Table 2.5.2-2, when plant process signals reach specified limits.	An operational test of the as-built PMS will be performed using real or simulated test signals.	i) The reactor trip switchgear opens after the test signal reaches the specified limit. This only needs to be verified for one automatic reactor trip function. ii) PMS output signals to the reactor trip switchgear are generated after the test signal reaches the specified limit. This needs to be verified for each automatic reactor trip function.
6.b) The PMS initiates automatic actuation of engineered safety features, as identified in Table 2.5.2-3, when plant process signals reach specified limits.	An operational test of the as-built PMS will be performed using real or simulated test signals.	Appropriate PMS output signals are generated after the test signal reaches the specified limit. These output signals remain following removal of the test signal. Tests from the actuation signal to the actuated device(s) are performed as part of the system-related inspection, test, analysis, and acceptance criteria.

Table 2.5.2-8 (cont.)
Inspections, Tests, Analyses, and Acceptance Criteria

Design Commitment	Inspections, Tests, Analyses	Acceptance Criteria
6.c) The PMS provides manual initiation of reactor trip and selected engineered safety features as identified in Table 2.5.2-4.	An operational test of the as-built PMS will be performed using the PMS manual actuation controls.	i) The reactor trip switchgear opens after manual reactor trip controls are actuated. ii) PMS output signals are generated for reactor trip and selected engineered safety features as identified in Table 2.5.2-4 after the manual initiation controls are actuated.
7.a) The PMS provides process signals to the PLS through isolation devices.	Type tests, analyses, or a combination of type tests and analyses of the isolation devices will be performed.	A report exists and concludes that the isolation devices prevent credible faults from propagating into the PMS.
7.b) The PMS provides process signals to the DDS through isolation devices.	Type tests, analyses, or a combination of type tests and analyses of the isolation devices will be performed.	A report exists and concludes that the isolation devices prevent credible faults from propagating into the PMS.
7.c) Data communication between safety and nonsafety systems does not inhibit the performance of the safety function.	Type tests, analyses, or a combination of type tests and analyses of the PMS gateways will be performed.	A report exists and concludes that data communication between safety and nonsafety systems does not inhibit the performance of the safety function.
7.d) The PMS ensures that the automatic safety function and the Class 1E manual controls both have priority over the non-Class 1E soft controls.	Type tests, analyses, or a combination of type tests and analyses of the PMS manual control circuits and algorithms will be performed.	A report exists and concludes that the automatic safety function and the Class 1E manual controls both have priority over the non-Class 1E soft controls.
7.e) The PMS receives signals from non-safety equipment that provides interlocks for PMS test functions through isolation devices.	Type tests, analyses, or a combination of type tests and analyses of the isolation devices will be performed.	A report exists and concludes that the isolation devices prevent credible faults from propagating into the PMS.

Table 2.5.2-8 (cont.)
Inspections, Tests, Analyses, and Acceptance Criteria

Design Commitment	Inspections, Tests, Analyses	Acceptance Criteria
8.a) The PMS provides for the minimum inventory of displays, visual alerts, and fixed position controls, as identified in Table 2.5.2-5. The plant parameters listed with a "Yes" in the "Display" column and visual alerts listed with a "Yes" in the "Alert" column can be retrieved in the MCR. The fixed position controls listed with a "Yes" in the "Control" column are provided in the MCR.	i) An inspection will be performed for retrievability of plant parameters in the MCR. ii) An inspection and test will be performed to verify that the plant parameters are used to generate visual alerts that identify challenges to critical safety functions. iii) An operational test of the as-built system will be performed using each MCR fixed position control.	i) The plant parameters listed in Table 2.5.2-5 with a "Yes" in the "Display" column, can be retrieved in the MCR. ii) The plant parameters listed in Table 2.5.2-5 with a "Yes" in the "Alert" column are used to generate visual alerts that identify challenges to critical safety functions. The visual alerts actuate in accordance with their correct logic and values. iii) For each test of an as-built fixed position control listed in Table 2.5.2-5 with a "Yes" in the "Control" column, an actuation signal is generated. Tests from the actuation signal to the actuated device(s) are performed as part of the system-related inspection, test, analysis and acceptance criteria.
8.b) The PMS provides for the transfer of control capability from the MCR to the RSW using multiple transfer switches. Each individual transfer switch is associated with only a single safety-related group or with nonsafety-related control capability.	i) An inspection will be performed to verify that a transfer switch exists for each safety-related division and the nonsafety-related control capability. ii) An operational test of the as-built system will be performed to demonstrate the transfer of control capability from the MCR to the RSW.	i) A transfer switch exists for each safety-related division and the nonsafety-related control capability. ii) Actuation of each transfer switch results in an alarm in the MCR and RSW, the activation of operator control capability from the RSW, and the deactivation of operator control capability from the MCR for the associated safety-related division and nonsafety-related control capability.
8.c) Displays of the open/closed status of the reactor trip breakers can be retrieved in the MCR.	Inspection will be performed for retrievability of displays of the open/closed status of the reactor trip breakers in the MCR.	Displays of the open/closed status of the reactor trip breakers can be retrieved in the MCR.

Table 2.5.2-8 (cont.)
Inspections, Tests, Analyses, and Acceptance Criteria

Design Commitment	Inspections, Tests, Analyses	Acceptance Criteria
9.a) The PMS automatically removes blocks of reactor trip and engineered safety features actuation when the plant approaches conditions for which the associated function is designed to provide protection. These blocks are identified in Table 2.5.2-6.	An operational test of the as-built PMS will be performed using real or simulated test signals.	The PMS blocks are automatically removed when the test signal reaches the specified limit.
9.b) The PMS two-out-of-four initiation logic reverts to a two-out-of-three coincidence logic if one of the four channels is bypassed. All bypassed channels are alarmed in the MCR.	An operational test of the as-built PMS will be performed.	The PMS two-out-of-four initiation logic reverts to a two-out-of-three coincidence logic if one of the four channels is bypassed. All bypassed channels are alarmed in the MCR.
9.c) The PMS does not allow simultaneous bypass of two redundant channels.	An operational test of the as-built PMS will be performed. With one channel in bypass, an attempt will be made to place a redundant channel in bypass.	The redundant channel cannot be placed in bypass.
9.d) The PMS provides the interlock functions identified in Table 2.5.2-7.	An operational test of the as-built PMS will be performed using real or simulated test signals.	Appropriate PMS output signals are generated as the interlock conditions are changed.
10. Setpoints are determined using a methodology which accounts for loop inaccuracies, response testing, and maintenance or replacement of instrumentation.	Inspection will be performed for a document that describes the methodology and input parameters used to determine the PMS setpoints.	A report exists and concludes that the PMS setpoints are determined using a methodology which accounts for loop inaccuracies, response testing, and maintenance or replacement of instrumentation.

Table 2.5.2-8 (cont.)
Inspections, Tests, Analyses, and Acceptance Criteria

Design Commitment	Inspections, Tests, Analyses	Acceptance Criteria
11. The PMS hardware and software is developed using a planned design process which provides for specific design documentation and reviews during the following life cycle stages: a) Not used b) System definition phase c) Hardware and software development phase, consisting of hardware and software design and implementation d) System integration and test phase e) Installation phase	Inspection will be performed of the process used to design the hardware and software.	A report exists and concludes that the process defines the organizational responsibilities, activities, and configuration management controls for the following: a) Not used. b) Specification of functional requirements. c) Documentation and review of hardware and software. d) Performance of system tests and the documentation of system test results, including a response time test performed under maximum CPU loading to demonstrate that the PMS can fulfill its response time criteria. e) Performance of installation tests and inspections.

Table 2.5.2-8 (cont.)
Inspections, Tests, Analyses, and Acceptance Criteria

Design Commitment	Inspections, Tests, Analyses	Acceptance Criteria
12. The PMS software is designed, tested, installed, and maintained using a process which incorporates a graded approach according to the relative importance of the software to safety and specifies requirements for: a) Software management including documentation requirements, standards, review requirements, and procedures for problem reporting and corrective action. b) Software configuration management including historical records of software and control of software changes. c) Verification and validation including requirements for reviewer independence.	Inspection will be performed of the process used to design, test, install, and maintain the PMS software.	A report exists and concludes that the process establishes a method for classifying the PMS software elements according to their relative importance to safety and specifies requirements for software assigned to each safety classification. The report also concludes that requirements are provided for the following software development functions: a) Software management including documentation requirements, standards, review requirements, and procedures for problem reporting and corrective action. Software management requirements may be documented in the software quality assurance plan, software management plan, software development plan, software safety plan, and software operation and maintenance plan; or these requirements may be combined into a single software management plan. b) Software configuration management including historical records of software and control of software changes. Software configuration management requirements are provided in the software configuration management plan. c) Verification and validation including requirements for reviewer independence. Verification and validation requirements are provided in the verification and validation plan.

Table 2.5.2-8 (cont.)
Inspections, Tests, Analyses, and Acceptance Criteria

Design Commitment	Inspections, Tests, Analyses	Acceptance Criteria
13. The use of commercial grade computer hardware and software items in the PMS is accomplished through a process that specifies requirements for: a) Review of supplier design control, configuration management, problem reporting, and change control. b) Review of product performance. c) Receipt acceptance of the commercial grade item. d) Acceptance based on equipment qualification and software validation in the integrated system.	Inspection will be performed of the process defined to use commercial grade components in the application.	A report exists and concludes that the process has requirements for: a) Review of supplier design control, configuration management, problem reporting, and change control. b) Review of product performance. c) Receipt acceptance of the commercial grade item. d) Acceptance based on equipment qualification and software validation in the integrated system.
14. The Component Interface Module CIM) is developed using a planned design process which provides for specific design documentation and reviews. {Design Acceptance Criteria}	An inspection and or an audit will be performed of the processes used to design the hardware, development software, qualification and testing.	A report exists and concludes that CIM meets the below listed life cycle stages. Life cycle stages: a. Design requirements phase, may be referred to as conceptual or project definition phase b. System definition phase c. Hardware and software development phase, consisting of hardware and software design and implementation d. System integration and test phase e. Installation phase

Table 2.5.2-9

Component Name	Component Location
PMS Cabinets, Division A	Auxiliary Building
PMS Cabinets, Division B	Auxiliary Building
PMS Cabinets, Division C	Auxiliary Building
PMS Cabinets, Division D	Auxiliary Building
Reactor Trip Switchgear, Division A	Auxiliary Building
Reactor Trip Switchgear, Division B	Auxiliary Building
Reactor Trip Switchgear, Division C	Auxiliary Building
Reactor Trip Switchgear, Division D	Auxiliary Building
MCR/RSW Transfer Panels	Auxiliary Building
MCR Safety-related Displays	Auxiliary Building
MCR Safety-related Controls	Auxiliary Building

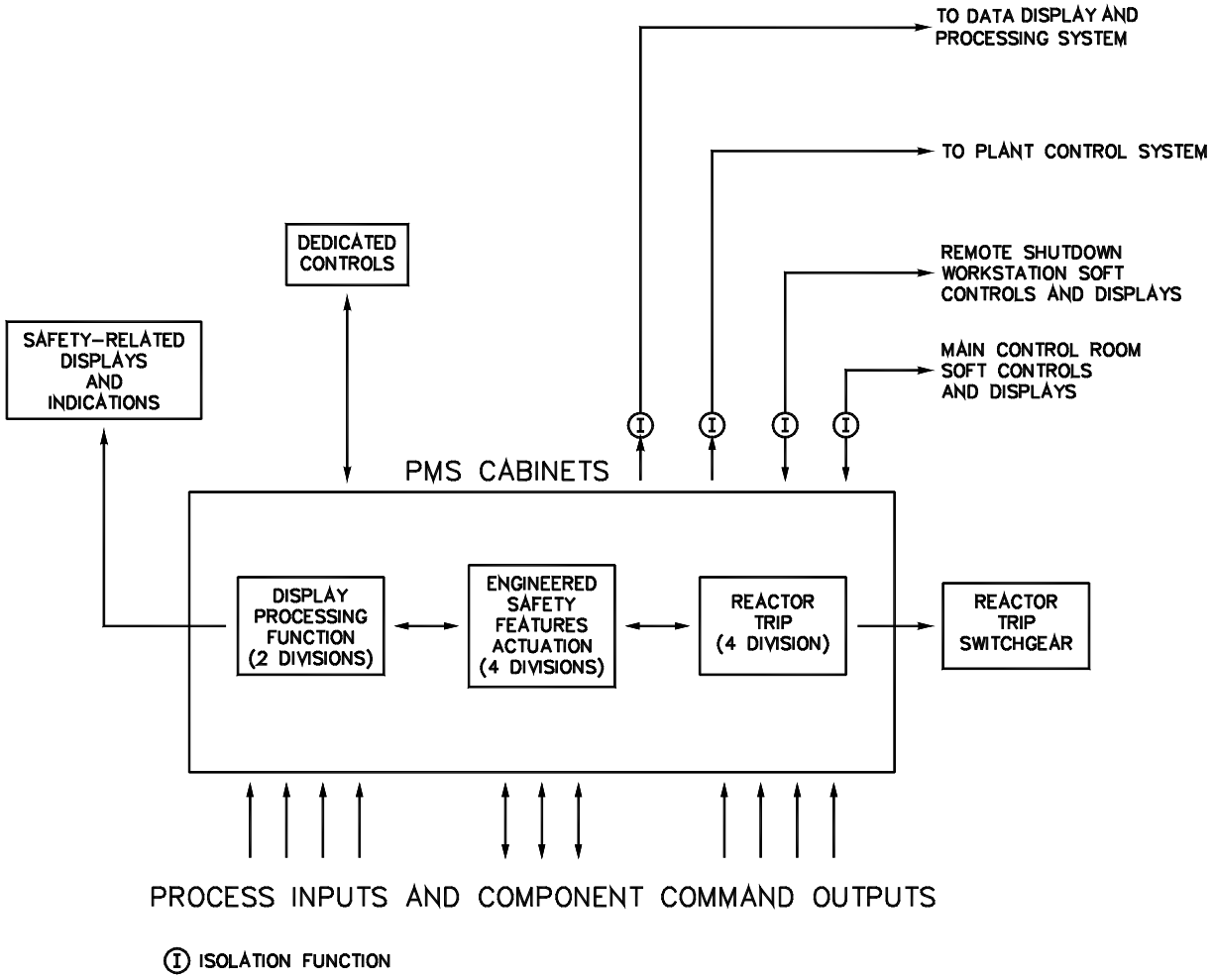

Figure 2.5.2-1
Protection and Safety Monitoring System

2.5.3 Plant Control System

Design Description

The plant control system (PLS) provides for automatic and manual control of nonsafety-related plant components during normal and emergency plant operations. The PLS has distributed controllers and operator controls interconnected by computer data links or data highways.

1. The functional arrangement of the PLS is as described in the Design Description of this Section 2.5.3.

2. The PLS provides control interfaces for the control functions listed in Table 2.5.3-1.

Inspections, Tests, Analyses, and Acceptance Criteria

Table 2.5.3-2 specifies the inspections, tests, analyses, and associated acceptance criteria for the PLS.

Table 2.5.3-1
Control Functions Supported by the PLS

1. Reactor Power	5. Steam Generator Feedwater
2. Reactor Rod Position	6. Steam Dump
3. Pressurizer Pressure	7. Rapid Power Reduction
4. Pressurizer Water Level	

Table 2.5.3-2
Inspections, Tests, Analyses, and Acceptance Criteria

Design Commitment	Inspections, Tests, Analyses	Acceptance Criteria
1. The functional arrangement of the PLS is as described in the Design Description of this Section 2.5.3.	Inspection of the as-built system will be performed.	The as-built PLS conforms with the functional arrangement as described in the Design Description of this Section 2.5.3.
2. The PLS provides control interfaces for the control functions listed in Table 2.5.3-1.	An operational test of the system will be performed using simulated input signals. System outputs or component operations will be monitored to determine the operability of the control functions.	The PLS provides control interfaces for the control functions listed in Table 2.5.3-1.

2.5.4 Data Display and Processing System

Design Description

The data display and processing system (DDS) provides nonsafety-related alarms and displays, analysis of plant data, plant data logging and historical storage and retrieval, and operational support for plant personnel. The DDS has distributed computer processors and video display units to support the data processing and display functions.

1. The functional arrangement of the DDS is as described in the Design Description of this Section 2.5.4.

2. The DDS, in conjunction with the operator workstations, provides the following function:

   The DDS provides for the minimum inventory of displays, visual alerts, and fixed position controls, as identified in Table 2.5.4-1. The plant parameters listed with a "Yes" in the "Display" column and visual alerts listed with a "Yes" in the "Alert" column can be retrieved at the remote shutdown workstation (RSW). The controls listed with a "Yes" in the "Control" column are provided at the RSW.

3. The DDS provides information pertinent to the status of the protection and safety monitoring system.

Inspections, Tests, Analyses, and Acceptance Criteria

Table 2.5.4-2 specifies the inspections, tests, analyses, and associated acceptance criteria for the DDS.

Table 2.5.4-1
Minimum Inventory of Controls, Displays, and Alerts at the RSW

Description	Control	Display	Alert(1)
Neutron Flux	-	Yes	Yes
Neutron Flux Doubling	-	No	Yes
Startup Rate	-	Yes	Yes
Reactor Coolant System (RCS) Pressure	-	Yes	Yes
Wide-range Hot Leg Temperature	-	Yes	No
Wide-range Cold Leg Temperature	-	Yes	Yes
RCS Cooldown Rate Compared to the Limit Based on RCS Pressure	-	Yes	Yes
Wide-range Cold Leg Temperature Compared to the Limit Based on RCS Pressure	-	Yes	Yes
Change of RCS Temperature by more than 5°F in the last 10 minutes	-	No	Yes
Containment Water Level	-	Yes	Yes
Containment Pressure	-	Yes	Yes
Pressurizer Water Level	-	Yes	Yes
Pressurizer Water Level Trend	-	Yes	No
Pressurizer Reference Leg Temperature	-	Yes	No
Reactor Vessel-Hot Leg Water Level	-	Yes	Yes
Pressurizer Pressure	-	Yes	No
Core Exit Temperature	-	Yes	Yes
RCS Subcooling	-	Yes	Yes
RCS Cold Overpressure Limit	-	Yes	Yes
In-containment Refueling Water Storage Tank (IRWST) Water Level	-	Yes	Yes
Passive Residual Heat Removal (PRHR) Flow	-	Yes	Yes

Note: Dash (-) indicates not applicable.

1. These parameters are used to generate visual alerts that identify challenges to the critical safety functions. For the RSW, the visual alerts are embedded in the nonsafety-related displays as visual signals.

Table 2.5.4-1 (cont.)
Minimum Inventory of Controls, Displays, and Alerts at the RSW

Description	Control	Display	Alert(1)
PRHR Outlet Temperature	-	Yes	Yes
Passive Containment Cooling System (PCS) Storage Tank Water Level	-	Yes	No
PCS Cooling Flow	-	Yes	No
IRWST to Normal Residual Heat Removal System (RNS) Suction Valve Status	-	Yes	Yes
Remotely Operated Containment Isolation Valve Status	-	Yes	No
Containment Area High-range Radiation Level	-	Yes	Yes
Containment Pressure (Extended Range)	-	Yes	No
Core Makeup Tank (CMT) Level	-	Yes	No
Manual Reactor Trip (also initiates turbine trip)	Yes	-	-
Manual Safeguards Actuation	Yes	-	-
Manual CMT Actuation	Yes	-	-
Manual Automatic Depressurization System (ADS) Stages 1, 2, and 3 Actuation	Yes	-	-
Manual ADS Stage 4 Actuation	Yes	-	-
Manual PRHR Actuation	Yes	-	-
Manual Containment Cooling Actuation	Yes	-	-
Manual IRWST Injection Actuation	Yes	-	-
Manual Containment Recirculation Actuation	Yes	-	-
Manual Containment Isolation	Yes	-	-
Manual Main Steam Line Isolation	Yes	-	-
Manual Feedwater Isolation	Yes	-	-
Manual Containment Hydrogen Igniter (Nonsafety-related)	Yes	-	-

Note: Dash (-) indicates not applicable.

1. These parameters are used to generate visual alerts that identify challenges to the critical safety functions. For the RSW, the visual alerts are embedded in the nonsafety-related displays as visual signals.

Table 2.5.4-2
Inspections, Tests, Analyses, and Acceptance Criteria

Design Commitment	Inspections, Tests, Analyses	Acceptance Criteria
1. The functional arrangement of the DDS is as described in the Design Description of this Section 2.5.4.	Inspection of the as-built system will be performed.	The as-built DDS conforms with the functional arrangement as described in the Design Description of this Section 2.5.4.
2. The DDS provides for the minimum inventory of displays, visual alerts, and fixed position controls, as identified in Table 2.5.4-1. The plant parameters listed with a "Yes" in the "Display" column and visual alerts listed with a "Yes" in the "Alert" column can be retrieved at the RSW. The controls listed with a "Yes" in the "Control" column are provided at the RSW.	i) An inspection will be performed for retrievability of plant parameters at the RSW. ii) An inspection and test will be performed to verify that the plant parameters are used to generate visual alerts that identify challenges to critical safety functions. iii) An operational test of the as-built system will be performed using each RSW control.	i) The plant parameters listed in Table 2.5.4-1 with a "Yes" in the "Display" column can be retrieved at the RSW. ii) The plant parameters listed in Table 2.5.4-1 with a "Yes" in the "Alert" column are used to generate visual alerts that identify challenges to critical safety functions. The visual alerts actuate in accordance with their logic and values. iii) For each test of a control listed in Table 2.5.4-1 with a "Yes" in the "Control" column, an actuation signal is generated. Tests from the actuation signal to the actuated device(s) are performed as part of the system-related inspection, test, analysis and acceptance criteria.
3. The DDS provides information pertinent to the status of the protection and safety monitoring system.	Tests of the as-built system will be performed.	The as-built system provides displays of the bypassed and operable status of the protection and safety monitoring system.

2.5.5 In-Core Instrumentation System

Design Description

The in-core instrumentation system (IIS) provides safety-related core exit thermocouple signals to the protection and safety monitoring system (PMS). The IIS also provides nonsafety-related core exit thermocouple signals to the diverse actuation system (DAS). The core exit thermocouples are housed in the core instrument assemblies. Multiple core instrument assemblies are used to provide radial coverage of the core. At least three core instrument assemblies are provided in each core quadrant.

1. The functional arrangement of the IIS is as described in the Design Description of this Section 2.5.5.

2. The seismic Category I equipment identified in Table 2.5.5-1 can withstand seismic design basis loads without loss of safety function.

3. a) The Class 1E equipment identified in Table 2.5.5-1 as being qualified for a harsh environment can withstand environmental conditions that would exist before, during, and following a design basis accident without loss of safety function, for the time required to perform the safety function.

   b) The Class 1E cables between the Incore Thermocouple elements and the connector boxes located on the integrated head package have sheaths.

   c) For cables other than those covered by 3.b, separation is provided between IIS Class 1E divisions, and between Class 1E divisions and non-Class 1E cable.

4. Safety-related displays of the parameters identified in Table 2.5.5-1 can be retrieved in the main control room (MCR).

Inspections, Tests, Analyses, and Acceptance Criteria

Table 2.5.5-2 specifies the inspections, tests, analyses, and associated acceptance criteria for the IIS.

Table 2.5.5-1

Equipment Name	Seismic Cat. I	ASME Code Classification	Class 1E	Qual. for Harsh Envir.	Safety-Related Display
Incore Thimble Assemblies (at least three assemblies in each core quadrant)	Yes	–	Yes(1)	Yes(1)	Core Exit Temperature(1)

Note: Dash (-) indicates not applicable.

1. Only applies to the safety-related assemblies. There are at least two safety-related assemblies in each core quadrant.

Table 2.5.5-2
Inspections, Tests, Analyses, and Acceptance Criteria

Design Commitment	Inspections, Tests, Analyses	Acceptance Criteria
1. The functional arrangement of the IIS is as described in the Design Description of this Section 2.5.5.	Inspection of the as-built system will be performed.	The as-built IIS conforms with the functional arrangement as described in the Design Description of this Section 2.5.5.
2. The seismic Category I equipment identified in Table 2.5.5-1 can withstand seismic design basis dynamic loads without loss of safety function.	i) Inspection will be performed to verify that the seismic Category I equipment identified in Table 2.5.5-1 is located on the Nuclear Island. ii) Type tests, analyses, or a combination of type tests and analyses of seismic Category I equipment will be performed. iii) Inspection will be performed for the existence of a report verifying that the as-built equipment including anchorage is seismically bounded by the tested or analyzed conditions.	i) The seismic Category I equipment identified in Table 2.5.5-1 is located on the Nuclear Island. ii) A report exists and concludes that the seismic Category I equipment can withstand seismic design basis dynamic loads without loss of safety function. iii) A report exists and concludes that the as-built equipment including anchorage is seismically bounded by the tested or analyzed conditions.
3.a) The Class 1E equipment identified in Table 2.5.5-1 as being qualified for a harsh environment can withstand the environmental conditions that would exist before, during, and following a design basis accident without loss of safety function, for the time required to perform the safety function.	i) Type tests, analysis, or a combination of type tests and analysis will be performed on Class 1E equipment located in a harsh environment. ii) Inspection will be performed of the as-built Class 1E equipment and the associated wiring, cables, and terminations located in a harsh environment.	i) A report exists and concludes that the Class 1E equipment identified in Table 2.5.5-1 as being qualified for a harsh environment. This equipment can withstand the environmental conditions that would exist before, during, and following a design basis accident without loss of safety function for the time required to perform the safety function. ii) A report exists and concludes that the as-built Class 1E equipment and the associated wiring, cables, and terminations identified in Table 2.5.5-1 as being qualified for a harsh environment are bounded by type tests, analyses, or a combination of type tests and analyses.

Table 2.5.5-2 (cont.)
Inspections, Tests, Analyses, and Acceptance Criteria

Design Commitment	Inspections, Tests, Analyses	Acceptance Criteria
3.b) The Class 1E cables between the Incore Thermocouple elements and the connector boxes located on the integrated head package have sheaths.	Inspection of the as-built system will be performed.	The as-built Class 1E cables between the Incore Thermocouple elements and the connector boxes located on the integrated head package have sheaths.
3.c) For cables other than those covered by 3.b, separation is provided between IIS Class 1E divisions, and between Class 1E divisions and non-Class 1E cable.	See Tier 1 Material, Table 3.3-6, item 7.d.	See Tier 1 Material, Table 3.3-6, item 7.d.
4. Safety-related displays of the parameters identified in Table 2.5.5-1 can be retrieved in the MCR.	Inspection will be performed for retrievability of the safety-related displays in the MCR.	Safety-related displays identified in Table 2.5.5-1 can be retrieved in the MCR.

2.5.6 Special Monitoring System

Design Description

The special monitoring system (SMS) monitors the reactor coolant system (RCS) for the occurrence of impacts characteristic of metallic loose parts. Metal impact monitoring sensors are provided to monitor the RCS at the upper and lower head region of the reactor pressure vessel, and at the reactor coolant inlet region of each steam generator.

1. The functional arrangement of the SMS is as described in the Design Description of this Section 2.5.6.

2. Data obtained from the metal impact monitoring sensors can be retrieved in the main control room (MCR).

Inspections, Tests, Analyses, and Acceptance Criteria

Table 2.5.6-1 specifies the inspections, tests, analyses, and associated acceptance criteria for the SMS.

Table 2.5.6-1
Inspections, Tests, Analyses, and Acceptance Criteria

Design Commitment	Inspections, Tests, Analyses	Acceptance Criteria
1. The functional arrangement of the SMS is as described in the Design Description of this Section 2.5.6.	Inspection of the as-built system will be performed.	The as-built SMS conforms with the functional arrangement as described in the Design Description of this Section 2.5.6.
2. Data obtained from the metal impact monitoring sensors can be retrieved in the MCR.	Inspection will be performed for retrievability of data from the metal impact monitoring sensors in the MCR.	Data obtained from the metal impact monitoring sensors can be retrieved in the MCR.

2.5.7 Operation and Control Centers System

Design Description

The operation and control centers system (OCS) is developed and implemented based upon a human factors engineering (HFE) program. The human system interface (HSI) scope includes the design of the OCS and each of the HSI resources. For the purposes of the HFE program, the OCS includes the main control room, remote shutdown workstation, the local control stations, and the associated workstations for each of these centers. Implementation of the HFE program involves the completion of the human factors engineering analyses and plans described in Tier 1 Material Section 3.2, Human Factors Engineering.

Inspections, Tests, Analyses, and Acceptance Criteria

The inspections, tests, analyses, and associated acceptance criteria for the OCS are provided in Table 3.2-1.

2.5.8 Radiation Monitoring System

No entry. Radiation monitoring function covered in Section 3.5, Radiation Monitoring.

2.5.9 Seismic Monitoring System

Design Description

The seismic monitoring system (SJS) provides for the collection of seismic data in digital format, analysis of seismic data, notification of the operator if the ground motion exceeds a threshold value, and notification of the operator (after analysis of data) that a predetermined cumulative absolute velocity (CAV) has been exceeded. The SJS has at least four triaxial acceleration sensor units and a time-history analyzer and recording system. The time-history analyzer and recording system are located in the auxiliary building.

1. The functional arrangement of the SJS is as described in the Design Description of this Section 2.5.9.

2. The SJS can compute CAV and the 5 percent of critical damping response spectrum for frequencies between 1 and 10 Hertz.

3. The SJS has a dynamic range of 0.001g to 1.0g and a frequency range of 0.2 to 50 Hertz.

Inspections, Tests, Analyses, and Acceptance Criteria

Table 2.5.9-1 specifies the inspections, tests, analyses, and associated acceptance criteria for SJS.

Table 2.5.9-1
Inspections, Tests, Analyses, and Acceptance Criteria

Design Commitment	Inspections, Tests, Analyses	Acceptance Criteria
1. The functional arrangement of the SJS is as described in the Design Description of this Section 2.5.9.	Inspection of the as-built system will be performed.	The as-built SJS conforms with the functional arrangement as described in the Design Description of this Section 2.5.9.
2. The SJS can compute CAV and the 5 percent of critical damping response spectrum for frequencies between 1 and 10 Hz.	Type tests using simulated input signals, analyses, or a combination of type tests and analyses, of the SJS time-history analyzer and recording system will be performed.	A report exists and concludes that the SJS time-history analyzer and recording system can record data at a sampling rate of at least 200 samples per second, that the pre-event recording time is adjustable from less than or equal to 1.2 seconds to greater than or equal to 15.0 seconds, and that the initiation value is adjustable from less than or equal to 0.002g to greater than or equal to 0.02g.
3. The SJS has a dynamic range of 0.001g to 1.0g and a frequency range of 0.2 to 50 Hertz.	Type tests, analyses, or a combination of type tests and analyses, of the SJS triaxial acceleration sensors will be performed.	A report exists and concludes that the SJS triaxial acceleration sensors have a dynamic range of at least 0.001g to 1.0g and a frequency range of at least 0.2 to 50 Hertz.

2.5.10 Main Turbine Control and Diagnostic System

No entry. Covered in Section 2.4.2, Main Turbine System.

2.6 Electrical Power Systems

2.6.1 Main ac Power System

Design Description

The main ac power system (ECS) provides electrical ac power to nonsafety-related loads and non-Class 1E power to the Class 1E battery chargers and regulating transformers during normal and off-normal conditions.

The ECS is as shown in Figures 2.6.1-1 and the component locations of the ECS are as shown in Table 2.6.1-5.

1. The functional arrangement of the ECS is as described in the Design Description of this Section 2.6.1.

2. The seismic Category I equipment identified in Table 2.6.1-1 can withstand seismic design basis loads without loss of safety function.

3. a) The Class 1E breaker control power for the equipment identified in Table 2.6.1-1 are powered from their respective Class 1E division.

   b) Separation is provided between ECS Class 1E divisions, and between Class 1E divisions and non-Class 1E cable.

4. The ECS provides the following nonsafety-related functions:

   a) The ECS provides the capability for distributing non-Class 1E ac power from onsite sources (ZOS) to nonsafety-related loads listed in Table 2.6.1-2.

   b) The 6900 Vac circuit breakers in switchgear ECS-ES-1 and ECS-ES-2 open after receiving a signal from the onsite standby power system.

   c) Each standby diesel generator 6900 Vac circuit breaker closes after receiving a signal from the onsite standby power system.

   d) Each ancillary diesel generator unit is sized to supply power to long-term safety-related post-accident monitoring loads and control room lighting and ventilation through a regulating transformer; and for one passive containment cooling system (PCS) recirculation pump.

   e) The ECS provides two loss-of-voltage signals to the onsite standby power system (ZOS), one for each diesel-backed 6900 Vac switchgear bus.

   f) The ECS provides a reverse-power trip of the generator circuit breaker which is blocked for at least 15 seconds following a turbine trip.

5. Controls exist in the main control room (MCR) to cause the circuit breakers identified in Table 2.6.1-3 to perform the listed functions.

6. Displays of the parameters identified in Table 2.6.1-3 can be retrieved in the MCR.

Inspections, Tests, Analyses, and Acceptance Criteria

Table 2.6.1-4 specifies the inspections, tests, analyses, and associated acceptance criteria for the ECS.

Table 2.6.1-1

Equipment Name	Tag No.	Seismic Category I	Class 1E/ Qual. for Harsh Envir.	Safety-Related Display
Reactor Coolant Pump (RCP) Circuit Breaker	ECS-ES-31	Yes	Yes/No (Trip open only)	No
RCP Circuit Breaker	ECS-ES-32	Yes	Yes/No (Trip open only)	No
RCP Circuit Breaker	ECS-ES-41	Yes	Yes/No (Trip open only)	No
RCP Circuit Breaker	ECS-ES-42	Yes	Yes/No (Trip open only)	No
RCP Circuit Breaker	ECS-ES-51	Yes	Yes/No (Trip open only)	No
RCP Circuit Breaker	ECS-ES-52	Yes	Yes/No (Trip open only)	No
RCP Circuit Breaker	ECS-ES-61	Yes	Yes/No (Trip open only)	No
RCP Circuit Breaker	ECS-ES-62	Yes	Yes/No (Trip open only)	No

Table 2.6.1-2

Load Description	Power Source
Load Center Transformers EK-11, EK-12, EK-13, EK-14	ZOS-MG-02A
Diesel Oil Transfer Module Enclosure A Electric Unit Heater	ZOS-MG-02A
Diesel Oil Transfer Module Enclosure A Fan	ZOS-MG-02A
Class 1E Division A Regulating Transformer	ZOS-MG-02A
Class 1E Division C Regulating Transformer	ZOS-MG-02A
Diesel Generator Fuel Oil Transfer Pump 1A	ZOS-MG-02A
Diesel Generator Room A Building Standby Exhaust Fans 1A and 2A	ZOS-MG-02A
Diesel Generator Service Module A Air Handling Unit (AHU) 01A Fan	ZOS-MG-02A
Startup Feedwater Pump A	ZOS-MG-02A
Service Water Pump A	ZOS-MG-02A
Service Water Cooling Tower Fan A	ZOS-MG-02A
MCR/Control Support Area (CSA) AHU A Supply and Return Fans	ZOS-MG-02A
Divisions A/C Class 1E Electrical Room AHU A Supply and Return Fans	ZOS-MG-02A
Divisions B/D Class 1E Electrical Room AHU D Supply and Return Fans	ZOS-MG-02A
Air-cooled Chiller Pump 2	ZOS-MG-02A
Component Cooling Water Pump 1A	ZOS-MG-02A
Air-cooled Chiller 2	ZOS-MG-02A
Chemical and Volume Control System (CVS) Makeup Pump 1A	ZOS-MG-02A
CVS Pump Room Unit Cooler Fan A	ZOS-MG-02A
Normal Residual Heat Removal System (RNS) Pump 1A	ZOS-MG-02A
RNS Pump Room Unit Cooler Fan A	ZOS-MG-02A
Equipment Room AHU Supply and Return Fans VXS-MA-01A/02A	ZOS-MG-02A
Switchgear Room A AHU Supply and Return Fans VXS-MA-05A/06A	ZOS-MG-02A
Non-1E Battery Charger EDS1-DC-1	ZOS-MG-02A
Non-1E Battery Room A Exhaust Fan	ZOS-MG-02A
Non-1E Battery Charger EDS3-DC-1	ZOS-MG-02A

Table 2.6.1-2 (cont.)

Load Description	Power Source
Class 1E Division A Battery Charger 1 (24-hour)	ZOS-MG-02A
Class 1E Division C Battery Charger 1 (24-hour)	ZOS-MG-02A
Class 1E Division C Battery Charger 2 (72-hour)	ZOS-MG-02A
Divisions A/C Class 1E Battery Room Exhaust Fan A	ZOS-MG-02A
Supplemental Air Filtration Unit Fan A	ZOS-MG-02A
Backup Group 4A Pressurizer Heaters	ZOS-MG-02A
Spent Fuel Cooling Pump 1A	ZOS-MG-02A
Load Center Transformers EK-21, EK-22, EK-23, EK-24	ZOS-MG-02B
Diesel Oil Transfer Module Enclosure B Electric Unit Heater	ZOS-MG-02B
Diesel Oil Transfer Module Enclosure B Fan	ZOS-MG-02B
Class 1E Division B Regulating Transformer	ZOS-MG-02B
Class 1E Division D Regulating Transformer	ZOS-MG-02B
Diesel Generator Fuel Oil Transfer Pump 1B	ZOS-MG-02B
Diesel Generator Room B Building Standby Exhaust Fans 1B and 2B	ZOS-MG-02B
Diesel Generator Service Module B AHU 01B Fan	ZOS-MG-02B
Startup Feedwater Pump B	ZOS-MG-02B
Service Water Pump B	ZOS-MG-02B
Service Water Cooling Tower Fan B	ZOS-MG-02B
MCR/CSA AHU B Supply and Return Fans	ZOS-MG-02B
Divisions B/D Class 1E Electrical Room AHU B Supply and Return Fans	ZOS-MG-02B
Divisions A/C Class 1E Electrical Room AHU C Supply and Return Fans	ZOS-MG-02B
Air-cooled Chiller Pump 3	ZOS-MG-02B
Component Cooling Water Pump 1B	ZOS-MG-02B
Air-cooled Chiller 3	ZOS-MG-02B
CVS Makeup Pump 1B	ZOS-MG-02B
CVS Pump Room Unit Cooler Fan B	ZOS-MG-02B
RNS Pump 1B	ZOS-MG-02B

Table 2.6.1-2 (cont.)

Load Description	Power Source
RNS Pump Room Unit Cooler Fan B	ZOS-MG-02B
Equipment Room B AHU Supply and Return Fans VXS-MA-01B/02B	ZOS-MG-02B
Switchgear Room B AHU Supply and Return Fans VXS-MA-05B/06B	ZOS-MG-02B
Non-1E Battery Charger EDS2-DC-1	ZOS-MG-02B
Non-1E Battery Charger EDS4-DC-1	ZOS-MG-02B
Non-1E Battery Room B Exhaust Fan	ZOS-MG-02B
Class 1E Division B Battery Charger 1 (24-hour)	ZOS-MG-02B
Class 1E Division B Battery Charger 2 (72-hour)	ZOS-MG-02B
Class 1E Division D Battery Charger 1 (24-hour)	ZOS-MG-02B
Divisions B/D Class 1E Battery Room Exhaust Fan B	ZOS-MG-02B
Supplemental Air Filtration Unit Fan B	ZOS-MG-02B
Backup Group 4B Pressurizer Heaters	ZOS-MG-02B
Spent Fuel Cooling Pump 1B	ZOS-MG-02B

Table 2.6.1-3

Equipment	Tag No.	Display	Control Function
6900 V Switchgear Bus 1	ECS-ES-1	Yes (Bus voltage, breaker position for all breakers on bus)	Yes (Breaker open/close)
6900 V Switchgear Bus 2	ECS-ES-2	Yes (Bus voltage, breaker position for all breakers on bus)	Yes (Breaker open/close)
Unit Auxiliary Transformer A	ZAS-ET-2A	Yes (Secondary Voltage)	No
Unit Auxiliary Transformer B	ZAS-ET-2B	Yes (Secondary Voltage)	No
Reserve Auxiliary Transformer A	ZAS-ET-4A	Yes (Secondary Voltage)	No
Reserve Auxiliary Transformer B	ZAS-ET-4B	Yes (Secondary Voltage)	No

Table 2.6.1-4
Inspections, Tests, Analyses, and Acceptance Criteria

Design Commitment	Inspections, Tests, Analyses	Acceptance Criteria
1. The functional arrangement of the ECS is as described in the Design Description of this Section 2.6.1.	Inspection of the as-built system will be performed.	The as-built ECS conforms with the functional arrangement as described in the Design Description of this Section 2.6.1.
2. The seismic Category I equipment identified in Table 2.6.1-1 can withstand seismic design basis loads without loss of safety function.	i) Inspection will be performed to verify that the seismic Category I equipment identified in Table 2.6.1-1 is located on the Nuclear Island. ii) Type tests, analyses, or a combination of type tests and analyses of seismic Category I equipment will be performed. iii) Inspection will be performed for the existence of a report verifying that the as-built equipment including anchorage is seismically bounded by the tested or analyzed conditions.	i) The seismic Category I equipment identified in Table 2.6.1-1 is located on the Nuclear Island. ii) A report exists and concludes that the seismic Category I equipment can withstand seismic design basis loads without loss of safety function. iii) A report exists and concludes that the as-built equipment including anchorage is seismically bounded by the tested or analyzed conditions.
3.a) The Class 1E breaker control power for the equipment identified in Table 2.6.1-1 are powered from their respective Class 1E division.	Testing will be performed on the ECS by providing a simulated test signal in each Class 1E division.	A simulated test signal exists at the Class 1E equipment identified in Table 2.6.1-1 when the assigned Class 1E division is provided the test signal.
3.b) Separation is provided between ECS Class 1E divisions, and between Class 1E divisions and non-Class 1E cable.	See Tier 1 Material, Table 3.3-6, item 7.d.	See Tier 1 Material, Table 3.3-6, item 7.d.
4.a) The ECS provides the capability for distributing non-Class 1E ac power from onsite sources (ZOS) to nonsafety-related loads listed in Table 2.6.1-2.	Tests will be performed using a test signal to confirm that an electrical path exists for each selected load listed in Table 2.6.1-2 from an ECS-ES-1 or ECS-ES-2 bus. Each test may be a single test or a series of over-lapping tests.	A test signal exists at the terminals of each selected load.

Table 2.6.1-4 (cont.)
Inspections, Tests, Analyses, and Acceptance Criteria

Design Commitment	Inspections, Tests, Analyses	Acceptance Criteria
4.b) The 6900 Vac circuit breakers in switchgear ECS-ES-1 and ECS-ES-2 open after receiving a signal from the onsite standby power load system.	See Tier 1 Material, Table 2.6.4-1, item 2.a.	See Tier 1 Material, Table 2.6.4-1, item 2.a.
4.c) Each standby diesel generator 6900 Vac circuit breaker closes after receiving a signal from the onsite standby power system.	Testing will be performed using real or simulated signals from the standby diesel load system.	Each standby diesel generator 6900 Vac circuit breaker closes after receiving a signal from the standby diesel system.
4.d) Each ancillary diesel generator unit is sized to supply power to long-term safety-related post-accident monitoring loads and control room lighting and ventilation through a regulating transformer; and for one PCS recirculation pump.	Each ancillary diesel generator will be operated with fuel supplied from the ancillary diesel generator fuel tank and with a load of 35 kW or greater and a power factor between 0.9 and 1.0 for a time period required to reach engine temperature equilibrium plus 2.5 hours.	Each diesel generator provides power to the load with a generator terminal voltage of 480 ± 10% volts and a frequency of 60 ± 5% Hz.
4.e) The ECS provides two loss-of-voltage signals to the onsite standby power system (ZOS), one for each diesel-backed 6900 Vac switchgear bus.	Tests on the as-built ECS system will be conducted by simulating a loss-of-voltage condition on each diesel-backed 6900 Vac switchgear bus.	A loss-of-voltage signal is generated when the loss-of-voltage condition is simulated.
4.f) The ECS provides a reverse-power trip of the generator circuit breaker which is blocked for at least 15 seconds following a turbine trip.	Tests on the as-built ECS system will be conducted by simulating a turbine trip signal followed by a simulated reverse-power condition. The generator circuit breaker trip signal will be monitored.	The generator circuit breaker trip signal does not occur until at least 15 seconds after the simulated turbine trip.
5. Controls exist in the MCR to cause the circuit breakers identified in Table 2.6.1-3 to perform the listed functions.	Tests will be performed to verify that controls in the MCR can operate the circuit breakers identified in Table 2.6.1-3.	Controls in the MCR cause the circuit breakers identified in Table 2.6.1-3 to operate.
6. Displays of the parameters identified in Table 2.6.1-3 can be retrieved in the MCR.	Inspection will be performed for retrievability of the displays identified in Table 2.6.1-3 in the MCR.	Displays identified in Table 2.6.1-3 can be retrieved in the MCR.

Table 2.6.1-5

Component Name	Tag No.	Component Location
RCP Circuit Breaker	ECS-ES-31	Auxiliary Building
RCP Circuit Breaker	ECS-ES-32	Auxiliary Building
RCP Circuit Breaker	ECS-ES-41	Auxiliary Building
RCP Circuit Breaker	ECS-ES-42	Auxiliary Building
RCP Circuit Breaker	ECS-ES-51	Auxiliary Building
RCP Circuit Breaker	ECS-ES-52	Auxiliary Building
RCP Circuit Breaker	ECS-ES-61	Auxiliary Building
RCP Circuit Breaker	ECS-ES-62	Auxiliary Building
6900 V Switchgear Bus 1	ECS-ES-1	Annex Building
6900 V Switchgear Bus 2	ECS-ES-2	Annex Building
6900 V Switchgear Bus 3	ECS-ES-3	Turbine Building
6900 V Switchgear Bus 4	ECS-ES-4	Turbine Building
6900 V Switchgear Bus 5	ECS-ES-5	Turbine Building
6900 V Switchgear Bus 6	ECS-ES-6	Turbine Building
Main Generator	ZAS-MG-01	Turbine Building
Generator Circuit Breaker	ZAS-ES-01	Turbine Building
Main Step-up Transformer	ZAS-ET-1A	Yard
Main Step-up Transformer	ZAS-ET-1B	Yard
Main Step-up Transformer	ZAS-ET-1C	Yard
Unit Auxiliary Transformer A	ZAS-ET-2A	Yard
Unit Auxiliary Transformer B	ZAS-ET-2B	Yard
Reserve Auxiliary Transformer A	ZAS-ET-4A	Yard
Reserve Auxiliary Transformer B	ZAS-ET-4B	Yard
Ancillary Diesel Generator #1	ECS-MG-01	Annex Building
Ancillary Diesel Generator #2	ECS-MG-02	Annex Building
Ancillary Diesel Generator Distribution Panel 1	ECS-ED-01	Annex Building
Ancillary Diesel Generator Distribution Panel 1	ECS-ED-02	Annex Building

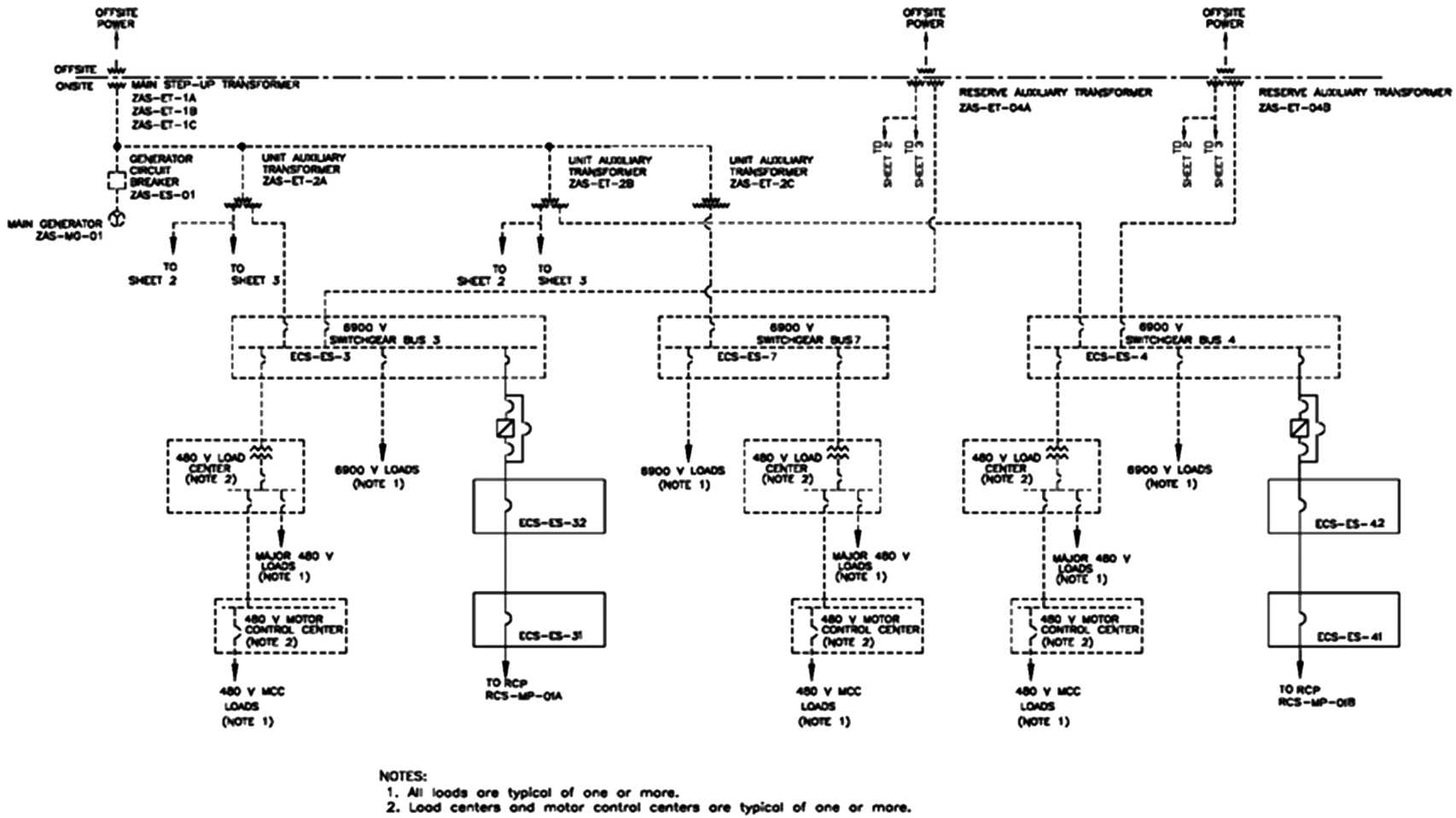

Figure 2.6.1-1 (Sheet 1 of 4)
Main ac Power System

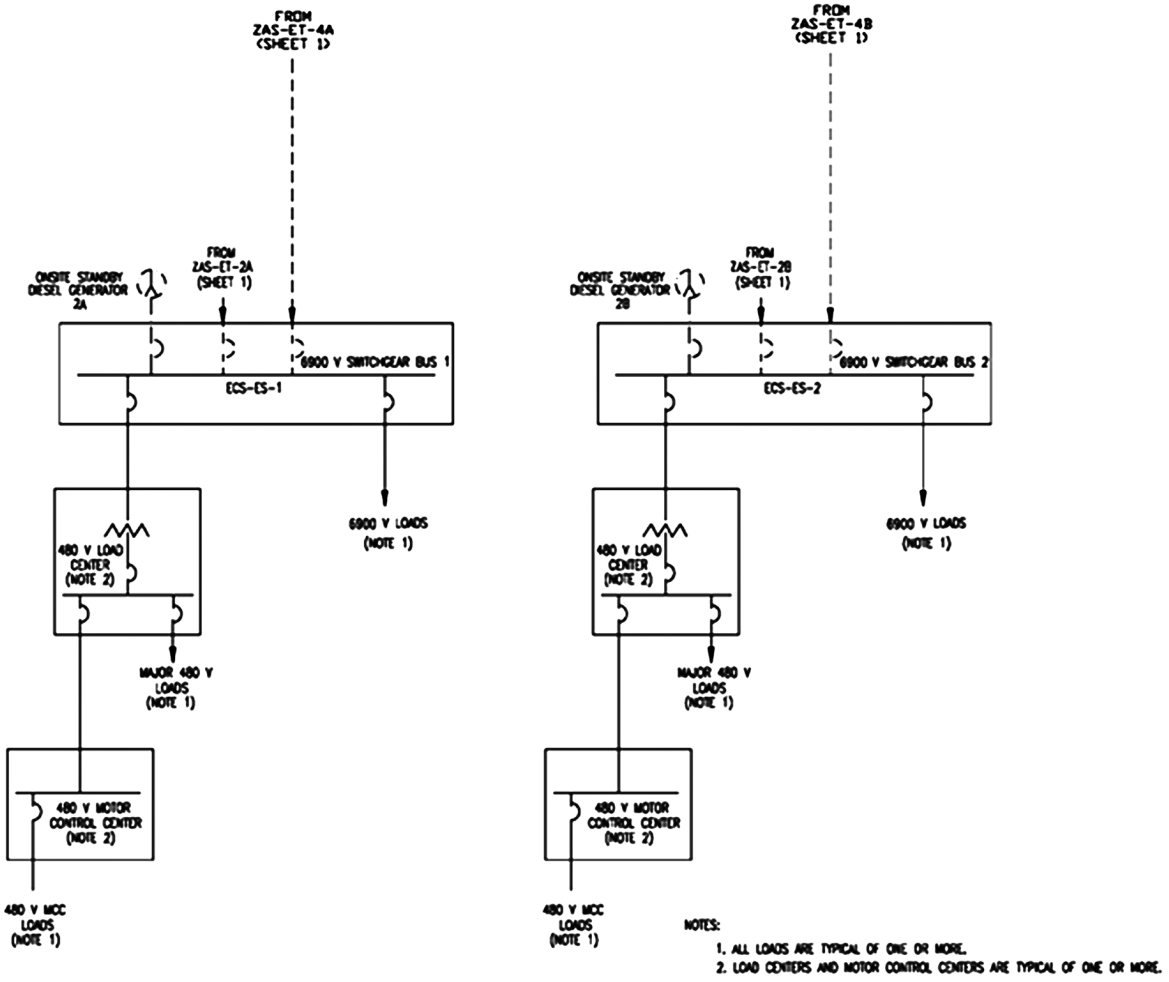

Figure 2.6.1-1 (Sheet 2 of 4)
Main ac Power System

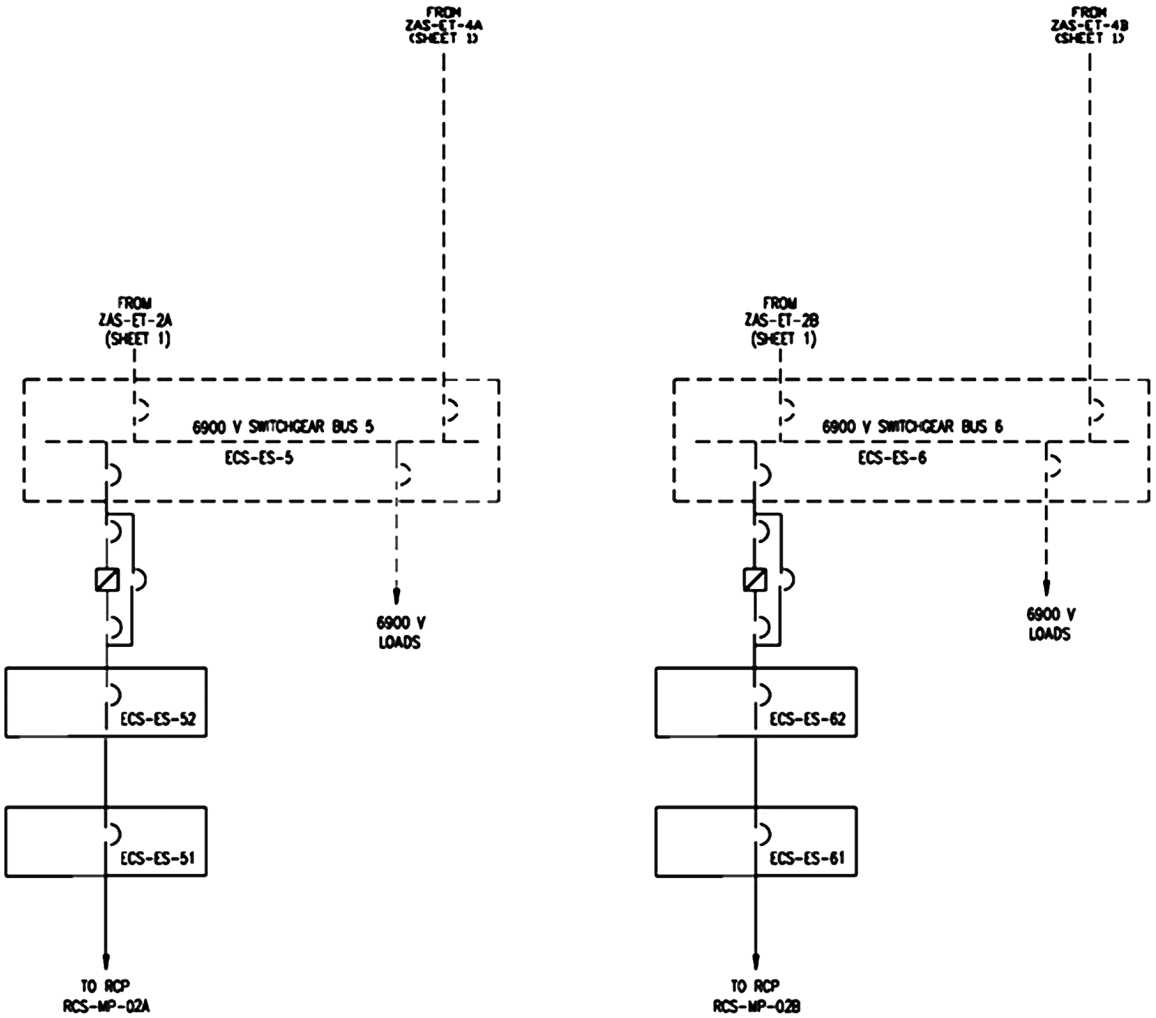

Figure 2.6.1-1 (Sheet 3 of 4)
Main ac Power System

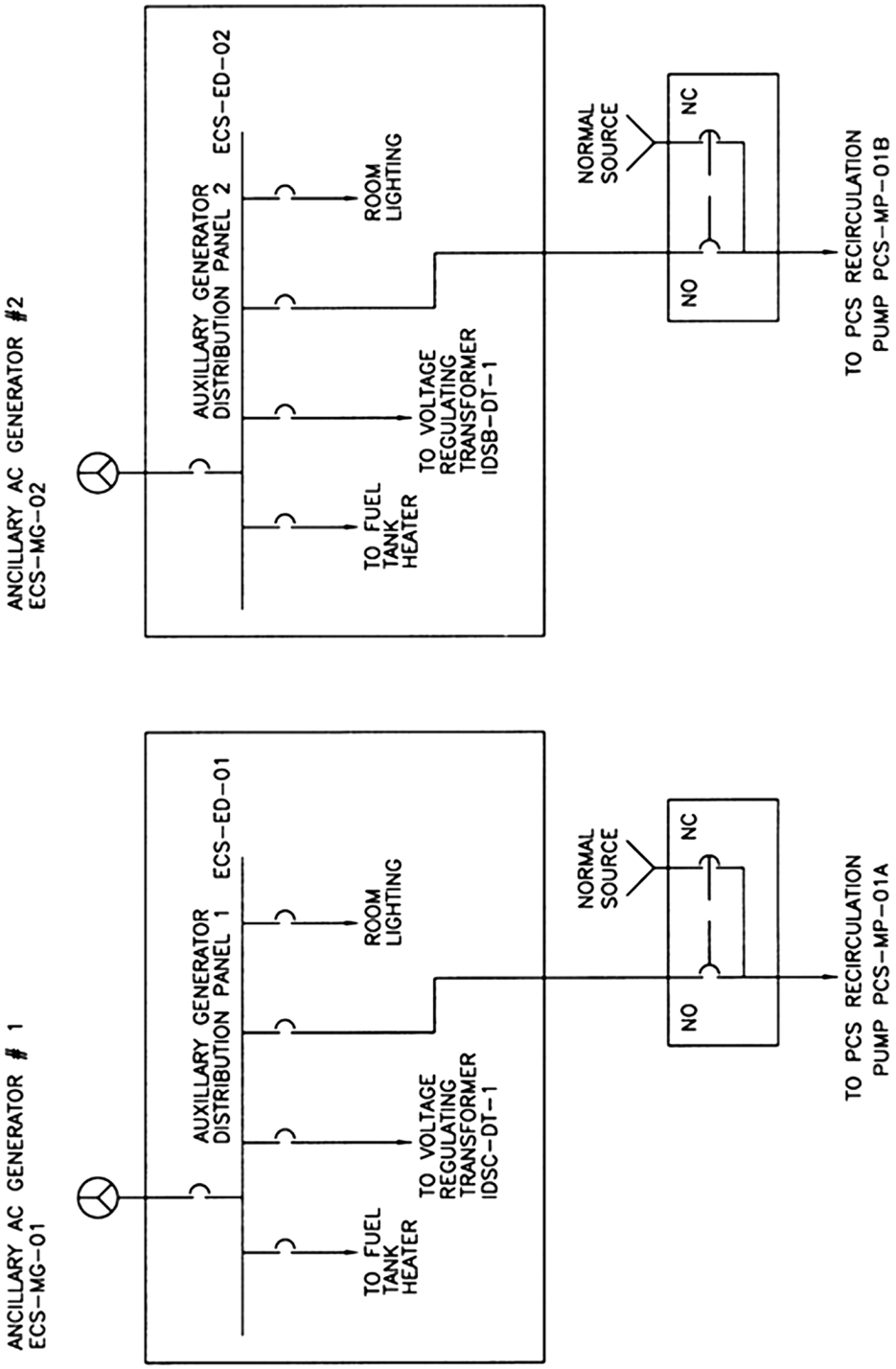

Figure 2.6.1-1 (Sheet 4 of 4)
Main ac Power System

2.6.2 Non-Class 1E dc and Uninterruptible Power Supply System

Design Description

The non-Class 1E dc and uninterruptible power supply system (EDS) provides dc and uninterruptible ac electrical power to nonsafety-related loads during normal and off-normal conditions.

The EDS is as shown in Figure 2.6.2-1 and the component locations of the EDS are as shown in Table 2.6.2-2.

1. The functional arrangement of the EDS is as described in the Design Description of this Section 2.6.2.

2. The EDS provides the following nonsafety-related functions:

   a) Each EDS load group 1, 2, 3, and 4 battery charger supplies the corresponding dc switchboard bus load while maintaining the corresponding battery charged.

   b) Each EDS load group 1, 2, 3, and 4 battery supplies the corresponding dc switchboard bus load for a period of 2 hours without recharging.

   c) Each EDS load group 1, 2, 3, and 4 inverter supplies the corresponding ac load.

Inspections, Tests, Analyses, and Acceptance Criteria

Table 2.6.2-1 specifies the inspections, tests, analyses, and associated acceptance criteria for the EDS.

Table 2.6.2-1
Inspections, Tests, Analyses, and Acceptance Criteria

Design Commitment	Inspections, Tests, Analyses	Acceptance Criteria
1. The functional arrangement of the EDS is as described in the Design Description of this Section 2.6.2.	Inspection of the as-built system will be performed.	The as-built EDS conforms with the functional arrangement as described in the Design Description of this Section 2.6.2.
2.a) Each EDS load group 1, 2, 3, and 4 battery charger supplies the corresponding dc switchboard bus load while maintaining the corresponding battery charged.	Testing of each as-built battery charger will be performed by applying a simulated or real load, or a combination of simulated or real loads.	Each battery charger provides an output current of at least 550 amps with an output voltage in the range 105 to 140 V.
2.b) Each EDS load group 1, 2, 3, and 4 battery supplies the corresponding dc switchboard bus load for a period of 2 hours without recharging.	Testing of each as-built battery will be performed by applying a simulated or real load, or a combination of simulated or real loads. The test will be conducted on a battery that has been fully charged and has been connected to a battery charger maintained at 135 ± 1 V for a period of no less than 24 hours prior to the test.	The battery terminal voltage is greater than or equal to 105 V after a period of no less than 2 hours, with an equivalent load greater than 500 amps.
2.c) Each EDS load group 1, 2, 3, and 4 inverter supplies the corresponding ac load.	Testing of each as-built inverter will be performed by applying a simulated or real load, or a combination of simulated or real loads, equivalent to a resistive load greater than 35 kW.	Each inverter provides a line-to-line output voltage of 208 ± 2% V at a frequency of 60 ± 0.5% Hz.

Table 2.6.2-2

Component Name	Tag No.	Component Location
Load Group 1 Battery	EDS1-DB-1	Annex Building
Load Group 2 Battery	EDS2-DB-1	Annex Building
Load Group 3 Battery	EDS3-DB-1	Annex Building
Load Group 4 Battery	EDS4-DB-1	Annex Building
Load Group 1 Battery Charger	EDS1-DC-1	Annex Building
Load Group 2 Battery Charger	EDS2-DC-1	Annex Building
Load Group 3 Battery Charger	EDS3-DC-1	Annex Building
Load Group 4 Battery Charger	EDS4-DC-1	Annex Building
Load Group 1 125 Vdc Switchboard	EDS1-DS-1	Annex Building
Load Group 1 125 Vdc Switchboard	EDS1-DS-11	Annex Building
Load Group 2 125 Vdc Switchboard	EDS2-DS-1	Annex Building
Load Group 2 125 Vdc Switchboard	EDS2-DS-11	Annex Building
Load Group 3 125 Vdc Switchboard	EDS3-DS-1	Annex Building
Load Group 3 125 Vdc Switchboard	EDS3-DS-11	Annex Building
Load Group 4 125 Vdc Switchboard	EDS4-DS-1	Annex Building
Load Group 4 125 Vdc Switchboard	EDS4-DS-11	Annex Building
Load Group 1 Inverter	EDS1-DU-1	Annex Building
Load Group 2 Inverter	EDS2-DU-1	Annex Building
Load Group 3 Inverter	EDS3-DU-1	Annex Building
Load Group 4 Inverter	EDS4-DU-1	Annex Building

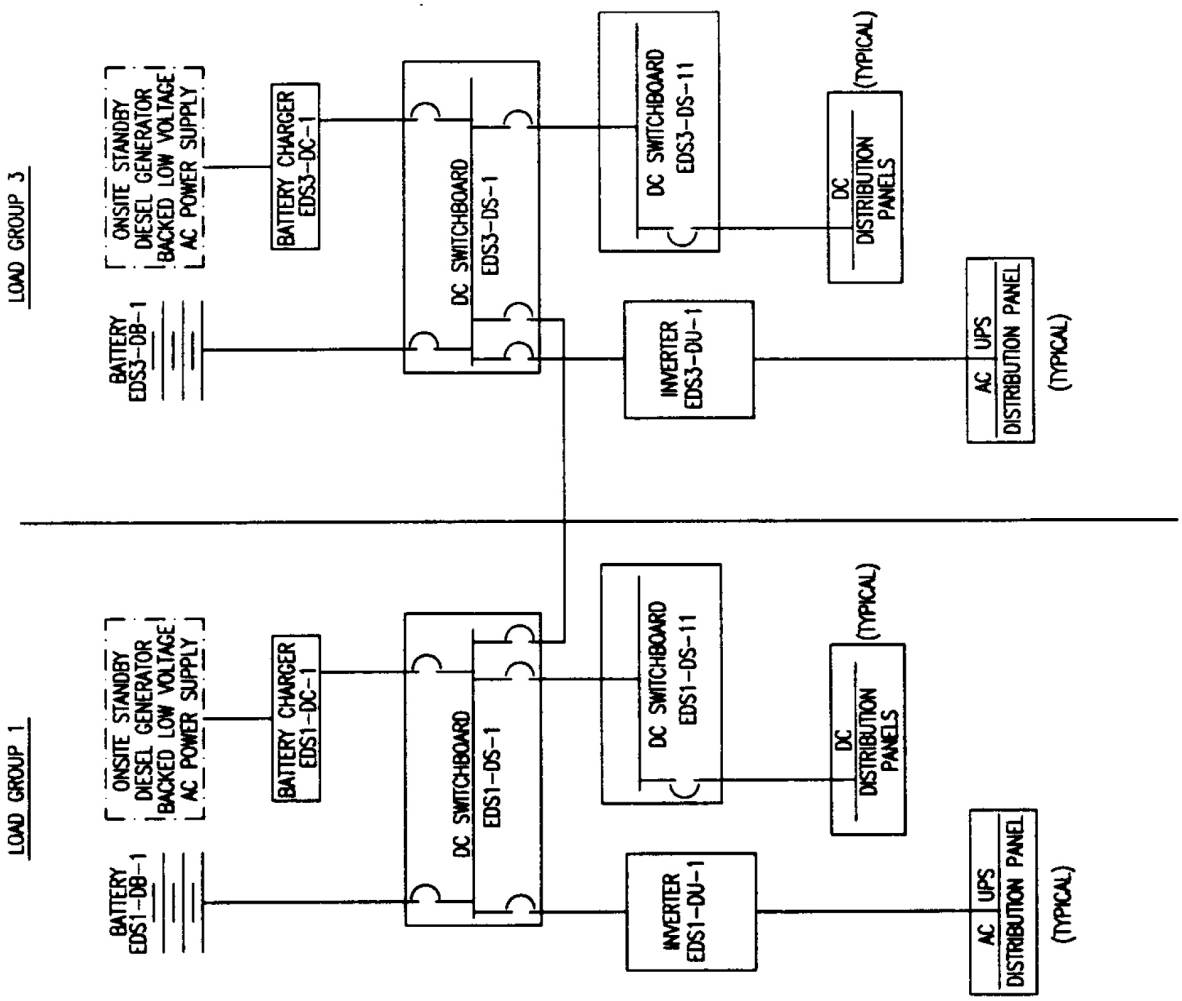

Figure 2.6.2-1 (Sheet 1 of 2)
Non-Class 1E dc and Uninterruptible Power Supply System

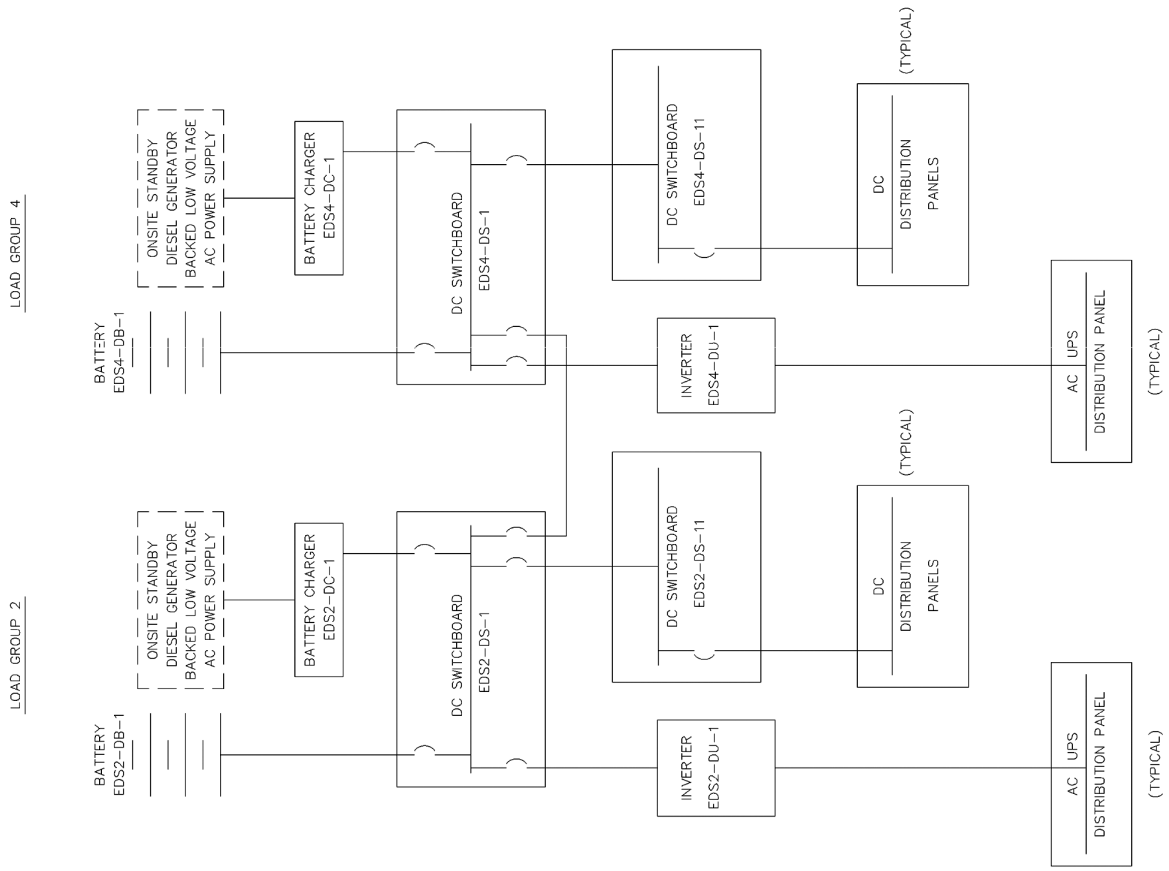

Figure 2.6.2-1 (Sheet 2 of 2)
Non-Class 1E dc and Uninterruptible Power Supply System

2.6.3 Class 1E dc and Uninterruptible Power Supply System

Design Description

The Class 1E dc and uninterruptible power supply system (IDS) provides dc and uninterruptible ac electrical power for safety-related equipment during normal and off-normal conditions.

The IDS is as shown in Figure 2.6.3-1 and the component locations of the IDS are as shown in Table 2.6.3-4.

1. The functional arrangement of the IDS is as described in the Design Description of this Section 2.6.3.

2. The seismic Category I equipment identified in Table 2.6.3-1 can withstand seismic design basis loads without loss of safety function.

3. Separation is provided between Class 1E divisions, and between Class 1E divisions and non-Class 1E cables.

4. The IDS provides the following safety-related functions:

   a) The IDS provides electrical independence between the Class 1E divisions.

   b) The IDS provides electrical isolation between the non-Class 1E ac power system and the non-Class 1E lighting in the MCR.

   c) Each IDS 24-hour battery bank supplies a dc switchboard bus load for a period of 24 hours without recharging.

   d) Each IDS 72-hour battery bank supplies a dc switchboard bus load for a period of 72 hours without recharging.

   e) The IDS spare battery bank supplies a dc load equal to or greater than the most severe switchboard bus load for the required period without recharging.

   f) Each IDS 24-hour inverter supplies its ac load.

   g) Each IDS 72-hour inverter supplies its ac load.

   h) Each IDS 24-hour battery charger provides the protection and safety monitoring system (PMS) with two loss-of-ac input voltage signals.

   i) The IDS supplies an operating voltage at the terminals of the Class 1E motor-operated valves identified in Tier 1 Material subsections 2.1.2, 2.2.1, 2.2.2, 2.2.3, 2.2.4, 2.3.2, and 2.3.6 that is greater than or equal to the minimum specified voltage.

5. The IDS provides the following nonsafety-related functions:

   a) Each IDS 24-hour battery charger supplies a dc switchboard bus load while maintaining the corresponding battery charged.

   b) Each IDS 72-hour battery charger supplies a dc switchboard bus load while maintaining the corresponding battery charged.

   c) Each IDS regulating transformer supplies an ac load when powered from the 480 V motor control center (MCC).

   d) The IDS Divisions B and C regulating transformers supply their post-72 hour ac loads when powered from an ancillary diesel generator.

6. Safety-related displays identified in Table 2.6.3-1 can be retrieved in the MCR.

7. The IDS dc battery fuses and battery charger circuit breakers, and dc distribution panels, MCCs, and their circuit breakers and fuses, are sized to supply their load requirements.

8. Circuit breakers and fuses in IDS battery, battery charger, dc distribution panel, and MCC circuits are rated to interrupt fault currents.

9. The IDS batteries, battery chargers, dc distribution panels, and MCCs are rated to withstand fault currents for the time required to clear the fault from its power source.

10. The IDS electrical distribution system cables are rated to withstand fault currents for the time required to clear the fault from its power source.

11. Displays of the parameters identified in Table 2.6.3-2 can be retrieved in the MCR.

Inspections, Tests, Analyses, and Acceptance Criteria

Table 2.6.3-3 specifies the inspections, tests, analyses, and associated acceptance criteria for the IDS.

Table 2.6.3-1

Equipment Name	Tag No.	Seismic Cat. I	Class 1E/ Qual. for Harsh Envir.	Safety-Related Display
Division A 250 Vdc 24-Hour Battery Bank	IDSA-DB-1	Yes	Yes/No	No
Division B 250 Vdc 24-Hour Battery Bank 1	IDSB-DB-1	Yes	Yes/No	No
Division B 250 Vdc 72-Hour Battery Bank 2	IDSB-DB-2	Yes	Yes/No	No
Division C 250 Vdc 24-Hour Battery Bank 1	IDSC-DB-1	Yes	Yes/No	No
Division C 250 Vdc 72-Hour Battery Bank 2	IDSC-DB-2	Yes	Yes/No	No
Division D 250 Vdc 24-Hour Battery Bank	IDSD-DB-1	Yes	Yes/No	No
Spare 250 Vdc Battery Bank	IDSS-DB-1	Yes	Yes/No	No
Division A 24-Hour Battery Charger 1	IDSA-DC-1	Yes	Yes/No	No
Division B 24-Hour Battery Charger 1	IDSB-DC-1	Yes	Yes/No	No
Division B 72-Hour Battery Charger 2	IDSB-DC-2	Yes	Yes/No	No
Division C 24-Hour Battery Charger 1	IDSC-DC-1	Yes	Yes/No	No
Division C 72-Hour Battery Charger 2	IDSC-DC-2	Yes	Yes/No	No
Division D 24-Hour Battery Charger 1	IDSD-DC-1	Yes	Yes/No	No
Spare Battery Charger 1	IDSS-DC-1	Yes	Yes/No	No
Division A 250 Vdc Distribution Panel	IDSA-DD-1	Yes	Yes/No	No
Division B 250 Vdc Distribution Panel	IDSB-DD-1	Yes	Yes/No	No
Division C 250 Vdc Distribution Panel	IDSC-DD-1	Yes	Yes/No	No
Division D 250 Vdc Distribution Panel	IDSD-DD-1	Yes	Yes/No	No
Division A 120 Vac Distribution Panel 1	IDSA-EA-1	Yes	Yes/No	No
Division A 120 Vac Distribution Panel 2	IDSA-EA-2	Yes	Yes/No	No
Division B 120 Vac Distribution Panel 1	IDSB-EA-1	Yes	Yes/No	No
Division B 120 Vac Distribution Panel 2	IDSB-EA-2	Yes	Yes/No	No
Division B 120 Vac Distribution Panel 3	IDSB-EA-3	Yes	Yes/No	No
Division C 120 Vac Distribution Panel 1	IDSC-EA-1	Yes	Yes/No	No
Division C 120 Vac Distribution Panel 2	IDSC-EA-2	Yes	Yes/No	No
Division C 120 Vac Distribution Panel 3	IDSC-EA-3	Yes	Yes/No	No
Division D 120 Vac Distribution Panel 1	IDSD-EA-1	Yes	Yes/No	No

Table 2.6.3-1 (cont.)

Equipment Name	Tag No.	Seismic Cat. I	Class 1E/ Qual. for Harsh Envir.	Safety-Related Display
Division D 120 Vac Distribution Panel 2	IDSD-EA-2	Yes	Yes/No	No
Division A Fuse Panel 4	IDSA-EA-4	Yes	Yes/No	No
Division B Fuse Panel 4	IDSB-EA-4	Yes	Yes/No	No
Division B Fuse Panel 5	IDSB-EA-5	Yes	Yes/No	No
Division B Fuse Panel 6	IDSB-EA-6	Yes	Yes/No	No
Division C Fuse Panel 4	IDSC-EA-4	Yes	Yes/No	No
Division C Fuse Panel 5	IDSC-EA-5	Yes	Yes/No	No
Division C Fuse Panel 6	IDSC-EA-6	Yes	Yes/No	No
Division D Fuse Panel 4	IDSD-EA-4	Yes	Yes/No	No
Division A Fused Transfer Switch Box 1	IDSA-DF-1	Yes	Yes/No	No
Division B Fused Transfer Switch Box 1	IDSB-DF-1	Yes	Yes/No	No
Division B Fused Transfer Switch Box 2	IDSB-DF-2	Yes	Yes/No	No
Division C Fused Transfer Switch Box 1	IDSC-DF-1	Yes	Yes/No	No
Division C Fused Transfer Switch Box 2	IDSC-DF-2	Yes	Yes/No	No
Division D Fused Transfer Switch Box 1	IDSD-DF-1	Yes	Yes/No	No
Spare Fused Transfer Switch Box 1	IDSS-DF-1	Yes	Yes/No	No
Spare Battery 125/250 Vdc Disconnect Switch	IDSS-SW-1	Yes	Yes/No	No
Division A 250 Vdc MCC	IDSA-DK-1	Yes	Yes/No	No
Division B 250 Vdc MCC	IDSB-DK-1	Yes	Yes/No	No
Division C 250 Vdc MCC	IDSC-DK-1	Yes	Yes/No	No
Division D 250 Vdc MCC	IDSD-DK-1	Yes	Yes/No	No
Division A 250 Vdc Switchboard 1	IDSA-DS-1	Yes	Yes/No	Yes (Bus Voltage)
Division B 250 Vdc Switchboard 1	IDSB-DS-1	Yes	Yes/No	Yes (Bus Voltage)
Division B 250 Vdc Switchboard 2	IDSB-DS-2	Yes	Yes/No	Yes (Bus Voltage)

Table 2.6.3-1 (cont.)

Equipment Name	Tag No.	Seismic Cat. I	Class 1E/ Qual. for Harsh Envir.	Safety-Related Display
Division C 250 Vdc Switchboard 1	IDSC-DS-1	Yes	Yes/No	Yes (Bus Voltage)
Division C 250 Vdc Switchboard 2	IDSC-DS-2	Yes	Yes/No	Yes (Bus Voltage)
Division D 250 Vdc Switchboard 1	IDSD-DS-1	Yes	Yes/No	Yes (Bus Voltage)
Division A Regulating Transformer	IDSA-DT-1	Yes	Yes/No	No
Division B Regulating Transformer	IDSB-DT-1	Yes	Yes/No	No
Division C Regulating Transformer	IDSC-DT-1	Yes	Yes/No	No
Division D Regulating Transformer	IDSD-DT-1	Yes	Yes/No	No
Division A 24-Hour Inverter 1	IDSA-DU-1	Yes	Yes/No	No
Division B 24-Hour Inverter 1	IDSB-DU-1	Yes	Yes/No	No
Division B 72-Hour Inverter 2	IDSB-DU-2	Yes	Yes/No	No
Division C 24-Hour Inverter 1	IDSC-DU-1	Yes	Yes/No	No
Division C 72-Hour Inverter 2	IDSC-DU-2	Yes	Yes/No	No
Division D 24-Hour Inverter 1	IDSD-DU-1	Yes	Yes/No	No
Spare Termination Box 2	IDSS-DF-2	Yes	Yes/No	No
Spare Termination Box 3	IDSS-DF-3	Yes	Yes/No	No
Spare Termination Box 4	IDSS-DF-4	Yes	Yes/No	No
Spare Termination Box 5	IDSS-DF-5	Yes	Yes/No	No
Spare Termination Box 6	IDSS-DF-6	Yes	Yes/No	No

Table 2.6.3-2

Equipment	Tag No.	Display/Status Indication
Division A Battery Monitor	IDSA-DV-1	Yes (Battery Ground Detection, Battery High Discharge Rate)
Division B 24-Hour Battery Monitor	IDSB-DV-1	Yes (Battery Ground Detection, Battery High Discharge Rate)
Division B 72-Hour Battery Monitor	IDSB-DV-2	Yes (Battery Ground Detection, Battery High Discharge Rate)
Division C 24-Hour Battery Monitor	IDSC-DV-1	Yes (Battery Ground Detection, Battery High Discharge Rate)
Division C 72-Hour Battery Monitor	IDSC-DV-2	Yes (Battery Ground Detection, Battery High Discharge Rate)
Division D Battery Monitor	IDSD-DV-1	Yes (Battery Ground Detection, Battery High Discharge Rate)
Division A Fused Transfer Switch Box	IDSA-DF-1	Yes (Battery Current, Battery Disconnect Switch Position)
Division B 24-Hour Fused Transfer Switch Box	IDSB-DF-1	Yes (Battery Current, Battery Disconnect Switch Position)
Division B 72-Hour Fused Transfer Switch Box	IDSB-DF-2	Yes (Battery Current, Battery Disconnect Switch Position)
Division C 24-Hour Fused Transfer Switch Box	IDSC-DF-1	Yes (Battery Current, Battery Disconnect Switch Position)
Division C 72-Hour Fused Transfer Switch Box	IDSC-DF-2	Yes (Battery Current, Battery Disconnect Switch Position)
Division D Fused Transfer Switch Box	IDSD-DF-1	Yes (Battery Current, Battery Disconnect Switch Position)

Table 2.6.3-2 (cont.)

Equipment	Tag No.	Display/Status Indication
Division A Battery Charger	IDSA-DC-1	Yes (Charger Output Current, Charger Trouble(1))
Division B 24-Hour Battery Charger	IDSB-DC-1	Yes (Charger Output Current, Charger Trouble(1))
Division B 72-Hour Battery Charger	IDSB-DC-2	Yes (Charger Output Current, Charger Trouble(1))
Division C 24-Hour Battery Charger	IDSC-DC-1	Yes (Charger Output Current, Charger Trouble(1))
Division C 72-Hour Battery Charger	IDSC-DC-2	Yes (Charger Output Current, Charger Trouble(1))
Division D Battery Charger	IDSD-DC-1	Yes (Charger Output Current, Charger Trouble(1))

Note: (1) Battery charger trouble includes charger dc output under/over voltage

Table 2.6.3-3
Inspections, Tests, Analyses, and Acceptance Criteria

Design Commitment	Inspections, Tests, Analyses	Acceptance Criteria
1. The functional arrangement of the IDS is as described in the Design Description of this Section 2.6.3.	Inspection of the as-built system will be performed.	The as-built IDS conforms with the functional arrangement as described in the Design Description of this Section 2.6.3.
2. The seismic Category I equipment identified in Table 2.6.3-1 can withstand seismic design basis loads without loss of safety function.	i) Inspection will be performed to verify that the seismic Category I equipment identified in Table 2.6.3-1 is located on the Nuclear Island. ii) Type tests, analyses, or a combination of type tests and analyses of seismic Category I equipment will be performed. iii) Inspection will be performed for the existence of a report verifying that the as-built equipment including anchorage is seismically bounded by the tested or analyzed conditions.	i) The seismic Category I equipment identified in Table 2.6.3-1 is located on the Nuclear Island. ii) A report exists and concludes that the seismic Category I equipment can withstand seismic design basis loads without loss of safety function. iii) A report exists and concludes that the as-built equipment including anchorage is seismically bounded by the tested or analyzed conditions.
3. Separation is provided between Class 1E divisions, and between Class 1E divisions and non-Class 1E cables.	See Tier 1 Material, Table 3.3-6, item 7.d.	See Tier 1 Material, Table 3.3-6, item 7.d.
4.a) The IDS provides electrical independence between the Class 1E divisions.	Testing will be performed on the IDS by providing a simulated test signal in each Class 1E division.	A simulated test signal exists at the Class 1E equipment identified in Table 2.6.3-1 when the assigned Class 1E division is provided the test signal.
4.b) The IDS provides electrical isolation between the non-Class 1E ac power system and the non-Class 1E lighting in the MCR.	Type tests, analyses, or a combination of type tests and analyses of the isolation devices will be performed.	A report exists and concludes that the battery chargers, regulating transformers, and isolation fuses prevent credible faults from propagating into the IDS.

Table 2.6.3-3 (cont.)
Inspections, Tests, Analyses, and Acceptance Criteria

Design Commitment	Inspections, Tests, Analyses	Acceptance Criteria
4.c) Each IDS 24-hour battery bank supplies a dc switchboard bus load for a period of 24 hours without recharging.	Testing of each 24-hour as-built battery bank will be performed by applying a simulated or real load, or a combination of simulated or real loads which envelope the battery bank design duty cycle. The test will be conducted on a battery bank that has been fully charged and has been connected to a battery charger maintained at 270±2 V for a period of no less than 24 hours prior to the test.	The battery terminal voltage is greater than or equal to 210 V after a period of no less than 24 hours with an equivalent load that equals or exceeds the battery bank design duty cycle capacity.
4.d) Each IDS 72-hour battery bank supplies a dc switchboard bus load for a period of 72 hours without recharging.	Testing of each 72-hour as-built battery bank will be performed by applying a simulated or real load, or a combination of simulated or real loads which envelope the battery bank design duty cycle. The test will be conducted on a battery bank that has been fully charged and has been connected to a battery charger maintained at 270±2 V for a period of no less than 24 hours prior to the test.	The battery terminal voltage is greater than or equal to 210 V after a period of no less than 72 hours with an equivalent load that equals or exceeds the battery bank design duty cycle capacity.
4.e) The IDS spare battery bank supplies a dc load equal to or greater than the most severe switchboard bus load for the required period without recharging.	Testing of the as-built spare battery bank will be performed by applying a simulated or real load, or a combination of simulated or real loads which envelope the most severe of the division batteries design duty cycle. The test will be conducted on a battery bank that has been fully charged and has been connected to a battery charger maintained at 270±2 V for a period of no less than 24 hours prior to the test.	The battery terminal voltage is greater than or equal to 210 V after a period with a load and duration that equals or exceeds the most severe battery bank design duty cycle capacity.

Table 2.6.3-3 (cont.)
Inspections, Tests, Analyses, and Acceptance Criteria

Design Commitment	Inspections, Tests, Analyses	Acceptance Criteria
4.f) Each IDS 24-hour inverter supplies its ac load.	Testing of each 24-hour as-built inverter will be performed by applying a simulated or real load, or a combination of simulated or real loads, equivalent to a resistive load greater than 12 kW. The inverter input voltage will be no more than 210 Vdc during the test.	Each 24-hour inverter supplies a line-to-line output voltage of 208 ± 2% V at a frequency of 60 ± 0.5% Hz.
4.g) Each IDS 72-hour inverter supplies its ac load.	Testing of each 72-hour as-built inverter will be performed by applying a simulated or real load, or a combination of simulated or real loads, equivalent to a resistive load greater than 7 kW. The inverter input voltage will be no more than 210 Vdc during the test.	Each 72-hour inverter supplies a line-to-line output voltage of 208 ± 2% V at a frequency of 60 ± 0.5% Hz.
4.h) Each IDS 24-hour battery charger provides the PMS with two loss-of-ac input voltage signals.	Testing will be performed by simulating a loss of input voltage to each 24-hour battery charger.	Two PMS input signals exist from each 24-hour battery charger indicating loss of ac input voltage when the loss-of-input voltage condition is simulated.
4.i) The IDS supplies an operating voltage at the terminals of the Class 1E motor operated valves identified in Tier 1 Material subsections 2.1.2, 2.2.1, 2.2.2, 2.2.3, 2.2.4, 2.3.2, and 2.3.6 that is greater than or equal to the minimum specified voltage.	Testing will be performed by stroking each specified motor-operated valve and measuring the terminal voltage at the motor starter input terminals with the motor operating. The battery terminal voltage will be no more than 210 Vdc during the test.	The motor starter input terminal voltage is greater than or equal 200 Vdc with the motor operating.
5.a) Each IDS 24-hour battery charger supplies a dc switchboard bus load while maintaining the corresponding battery charged.	Testing of each as-built 24-hour battery charger will be performed by applying a simulated or real load, or a combination of simulated or real loads.	Each 24-hour battery charger provides an output current of at least 150 A with an output voltage in the range 210 to 280 V.
5.b) Each IDS 72-hour battery charger supplies a dc switchboard bus load while maintaining the corresponding battery charged.	Testing of each 72-hour as-built battery charger will be performed by applying a simulated or real load, or a combination of simulated or real loads.	Each 72-hour battery charger provides an output current of at least 125 A with an output voltage in the range 210 to 280 V.

Table 2.6.3-3 (cont.)
Inspections, Tests, Analyses, and Acceptance Criteria

Design Commitment	Inspections, Tests, Analyses	Acceptance Criteria
5.c) Each IDS regulating transformer supplies an ac load when powered from the 480 V MCC.	Testing of each as-built regulating transformer will be performed by applying a simulated or real load, or a combination of simulated or real loads, equivalent to a resistive load greater than 30 kW when powered from the 480 V MCC.	Each regulating transformer supplies a line-to-line output voltage of 208 ± 2% V.
5.d) The IDS Divisions B and C regulating transformers supply their post-72-hour ac loads when powered from an ancillary diesel generator.	Inspection of the as-built system will be performed.	i) Ancillary diesel generator 1 is electrically connected to regulating transformer IDSC-DT-1 ii) Ancillary diesel generator 2 is electrically connected to regulating transformer IDSB-DT-1.
6. Safety-related displays identified in Table 2.6.3-1 can be retrieved in the MCR.	Inspection will be performed for retrievability of the safety-related displays in the MCR.	Safety-related displays identified in Table 2.6.3-1 can be retrieved in the MCR.
7. The IDS dc battery fuses and battery charger circuit breakers, and dc distribution panels, MCCs, and their circuit breakers and fuses, are sized to supply their load requirements.	Analyses for the as-built IDS dc electrical distribution system to determine the capacities of the battery fuses and battery charger circuit breakers, and dc distribution panels, MCCs, and their circuit breakers and fuses, will be performed.	Analyses for the as-built IDS dc electrical distribution system exist and conclude that the capacities of as-built IDS battery fuses and battery charger circuit breakers, and dc distribution panels, MCCs, and their circuit breakers and fuses, as determined by their nameplate ratings, exceed their analyzed load requirements.
8. Circuit breakers and fuses in IDS battery, battery charger, dc distribution panel, and MCC circuits are rated to interrupt fault currents.	Analyses for the as-built IDS dc electrical distribution system to determine fault currents will be performed.	Analyses for the as-built IDS dc electrical distribution system exist and conclude that the analyzed fault currents do not exceed the interrupt capacity of circuit breakers and fuses in the battery, battery charger, dc distribution panel, and MCC circuits, as determined by their nameplate ratings.

Table 2.6.3-3 (cont.)
Inspections, Tests, Analyses, and Acceptance Criteria

Design Commitment	Inspections, Tests, Analyses	Acceptance Criteria
9. The IDS batteries, battery chargers, dc distribution panels, and MCCs are rated to withstand fault currents for the time required to clear the fault from its power source.	Analyses for the as-built IDS dc electrical distribution system to determine fault currents will be performed.	Analyses for the as-built IDS dc electrical distribution system exist and conclude that the fault current capacities of as-built IDS batteries, battery chargers, dc distribution panels, and MCCs, as determined by manufacturer's ratings, exceed their analyzed fault currents for the time required to clear the fault from its power source as determined by the circuit interrupting device coordination analyses.
10. The IDS electrical distribution system cables are rated to withstand fault currents for the time required to clear the fault from its power source.	Analyses for the as-built IDS dc electrical distribution system to determine fault currents will be performed.	Analyses for the as-built IDS dc electrical distribution system exist and conclude that the IDS dc electrical distribution system cables will withstand the analyzed fault currents, as determined by manufacturer's ratings, for the time required to clear the fault from its power source as determined by the circuit interrupting device coordination analyses.
11. Displays of the parameters identified in Table 2.6.3-2 can be retrieved in the MCR.	Inspection will be performed for retrievability of the displays identified in Table 2.6.3-2 in the MCR.	Displays identified in Table 2.6.3-2 can be retrieved in the MCR.

Table 2.6.3-4

Component Name	Tag No.	Component Location
Division A 250 Vdc 24-Hour Battery Bank	IDSA-DB-1	Auxiliary Building
Division B 250 Vdc 24-Hour Battery Bank 1	IDSB-DB-1	Auxiliary Building
Division B 250 Vdc 72-Hour Battery Bank 2	IDSB-DB-2	Auxiliary Building
Division C 250 Vdc 24-Hour Battery Bank 1	IDSC-DB-1	Auxiliary Building
Division C 250 Vdc 72-Hour Battery Bank 2	IDSC-DB-2	Auxiliary Building
Division D 250 Vdc 24-Hour Battery Bank	IDSD-DB-1	Auxiliary Building
Spare 125 Vdc Battery Bank	IDSS-DB-1	Auxiliary Building
Division A 24-Hour Battery Charger 1	IDSA-DC-1	Auxiliary Building
Division B 24-Hour Battery Charger 1	IDSB-DC-1	Auxiliary Building
Division B 72-Hour Battery Charger 2	IDSB-DC-2	Auxiliary Building
Division C 24-Hour Battery Charger 1	IDSC-DC-1	Auxiliary Building
Division C 72-Hour Battery Charger 2	IDSC-DC-2	Auxiliary Building
Division D 24-Hour Battery Charger 1	IDSD-DC-1	Auxiliary Building
Spare Battery Charger 1	IDSS-DC-1	Auxiliary Building
Division A 250 Vdc Distribution Panel	IDSA-DD-1	Auxiliary Building
Division B 250 Vdc Distribution Panel	IDSB-DD-1	Auxiliary Building
Division C 250 Vdc Distribution Panel	IDSC-DD-2	Auxiliary Building
Division D 250 Vdc Distribution Panel	IDSD-DD-1	Auxiliary Building
Division A 120 Vac Distribution Panel 1	IDSA-EA-1	Auxiliary Building
Division A 120 Vac Distribution Panel 2	IDSA-EA-2	Auxiliary Building
Division B 120 Vac Distribution Panel 1	IDSB-EA-1	Auxiliary Building
Division B 120 Vac Distribution Panel 2	IDSB-EA-2	Auxiliary Building
Division B 120 Vac Distribution Panel 3	IDSB-EA-3	Auxiliary Building
Division C 120 Vac Distribution Panel 1	IDSC-EA-1	Auxiliary Building
Division C 120 Vac Distribution Panel 2	IDSC-EA-2	Auxiliary Building
Division C 120 Vac Distribution Panel 3	IDSC-EA-3	Auxiliary Building
Division D 120 Vac Distribution Panel 1	IDSD-EA-1	Auxiliary Building
Division D 120 Vac Distribution Panel 2	IDSD-EA-2	Auxiliary Building

Table 2.6.3-4 (cont.)

Component Name	Tag No.	Component Location
Division A Fuse Panel 4	IDSA-EA-4	Auxiliary Building
Division B Fuse Panel 4	IDSB-EA-4	Auxiliary Building
Division B Fuse Panel 5	IDSB-EA-5	Auxiliary Building
Division B Fuse Panel 6	IDSB-EA-6	Auxiliary Building
Division C Fuse Panel 4	IDSC-EA-4	Auxiliary Building
Division C Fuse Panel 5	IDSC-EA-5	Auxiliary Building
Division C Fuse Panel 6	IDSC-EA-6	Auxiliary Building
Division D Fuse Panel 4	IDSD-EA-4	Auxiliary Building
Division A Fused Transfer Switch Box 1	IDSA-DF-1	Auxiliary Building
Division B Fused Transfer Switch Box 1	IDSB-DF-1	Auxiliary Building
Division B Fused Transfer Switch Box 2	IDSB-DF-2	Auxiliary Building
Division C Fused Transfer Switch Box 1	IDSC-DF-1	Auxiliary Building
Division C Fused Transfer Switch Box 2	IDSC-DF-2	Auxiliary Building
Division D Fused Transfer Switch Box 1	IDSD-DF-1	Auxiliary Building
Spare Fused Transfer Switch Box 1	IDSS-DF-1	Auxiliary Building
Spare Battery 125/240 Vdc Disconnect Switch	IDSS-SW-1	Auxiliary Building
Division A 250 Vdc MCC	IDSA-DK-1	Auxiliary Building
Division B 250 Vdc MCC	IDSB-DK-1	Auxiliary Building
Division C 250 Vdc MCC	IDSC-DK-1	Auxiliary Building
Division D 250 Vdc MCC	IDSD-DK-1	Auxiliary Building
Division A 250 Vdc Switchboard 1	IDSA-DS-1	Auxiliary Building
Division B 250 Vdc Switchboard 1	IDSB-DS-1	Auxiliary Building
Division B 250 Vdc Switchboard 2	IDSB-DS-2	Auxiliary Building
Division C 250 Vdc Switchboard 1	IDSC-DS-1	Auxiliary Building
Division C 250 Vdc Switchboard 2	IDSC-DS-2	Auxiliary Building
Division D 250 Vdc Switchboard 1	IDSD-DS-1	Auxiliary Building
Division A Regulating Transformer	IDSA-DT-1	Auxiliary Building
Division B Regulating Transformer	IDSB-DT-1	Auxiliary Building

Table 2.6.3-4 (cont.)

Component Name	Tag No.	Component Location
Division C Regulating Transformer	IDSC-DT-1	Auxiliary Building
Division D Regulating Transformer	IDSD-DT-1	Auxiliary Building
Division A 24-Hour Inverter 1	IDSA-DU-1	Auxiliary Building
Division B 24-Hour Inverter 1	IDSB-DU-1	Auxiliary Building
Division B 72-Hour Inverter 2	IDSB-DU-2	Auxiliary Building
Division C 24-Hour Inverter 1	IDSC-DU-1	Auxiliary Building
Division C 72-Hour Inverter 2	IDSC-DU-2	Auxiliary Building
Division D 24-Hour Inverter 1	IDSD-DU-1	Auxiliary Building
Spare Termination Box 2	IDSS-DF-2	Auxiliary Building
Spare Termination Box 3	IDSS-DF-3	Auxiliary Building
Spare Termination Box 4	IDSS-DF-4	Auxiliary Building
Spare Termination Box 5	IDSS-DF-5	Auxiliary Building
Spare Termination Box 6	IDSS-DF-6	Auxiliary Building

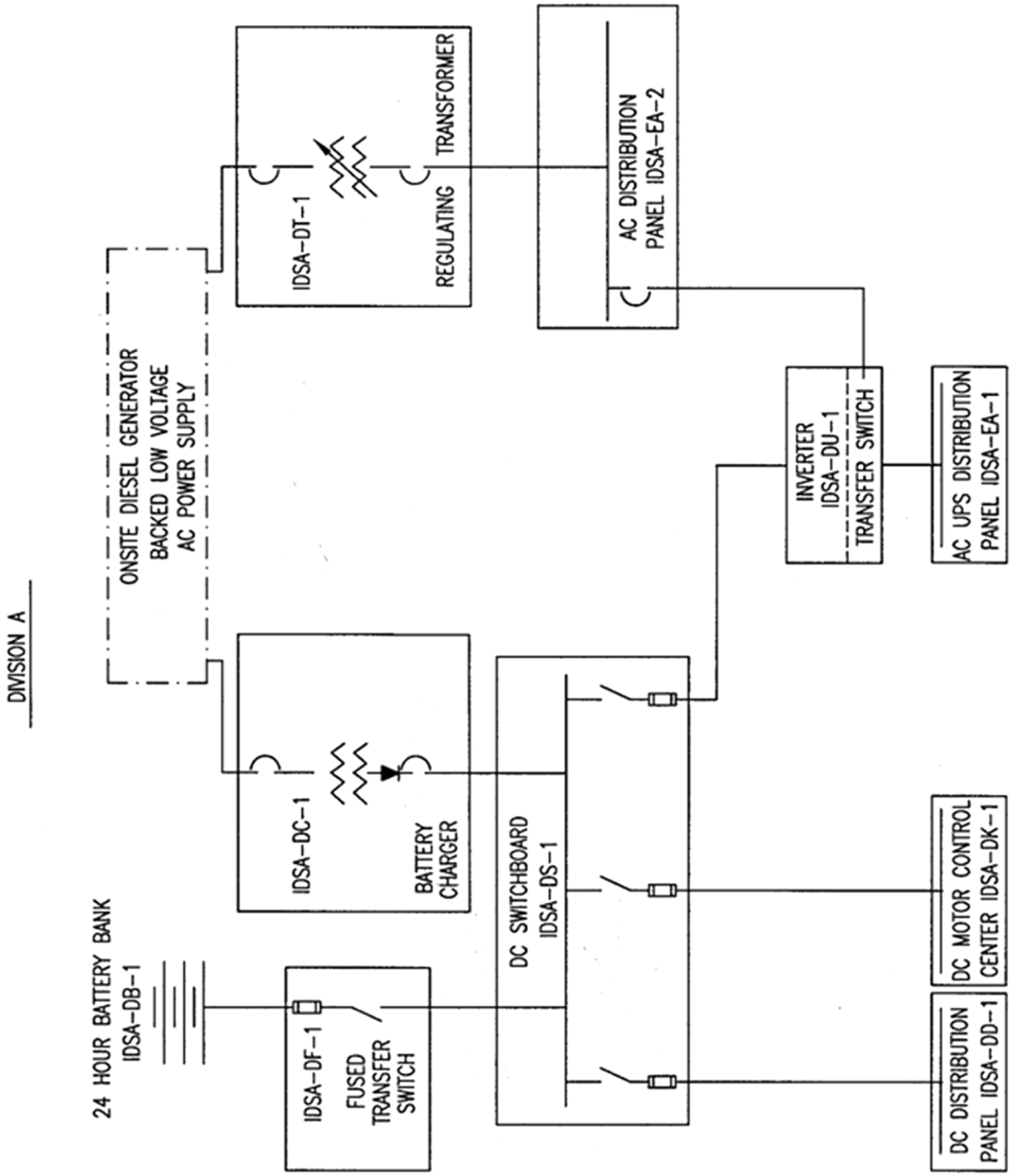

Figure 2.6.3-1 (Sheet 1 of 4)
Class 1E dc and Uninterruptible Power Supply System (Division A)

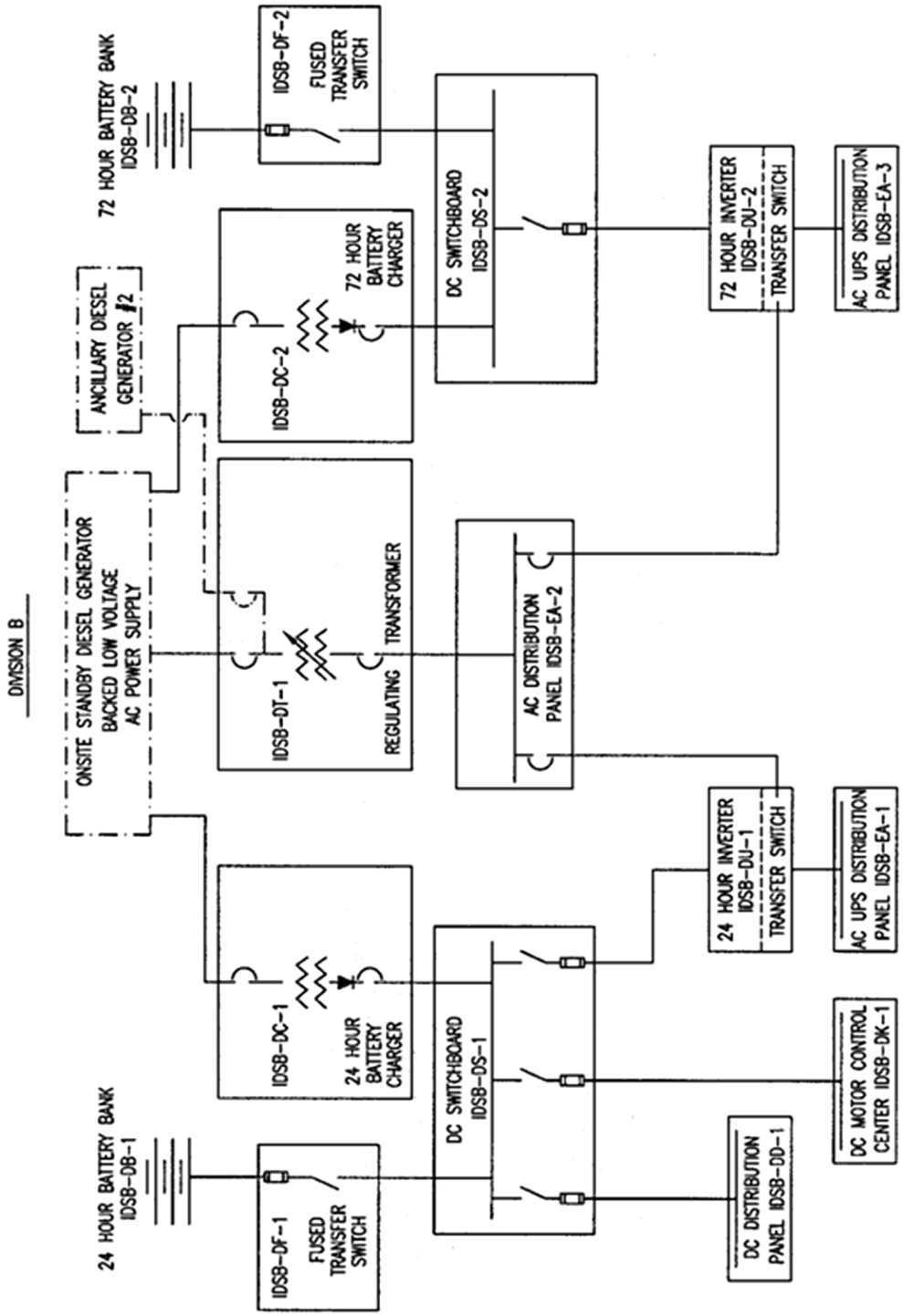

Figure 2.6.3-1 (Sheet 2 of 4)
Class 1E dc and Uninterruptible Power Supply System (Division B)

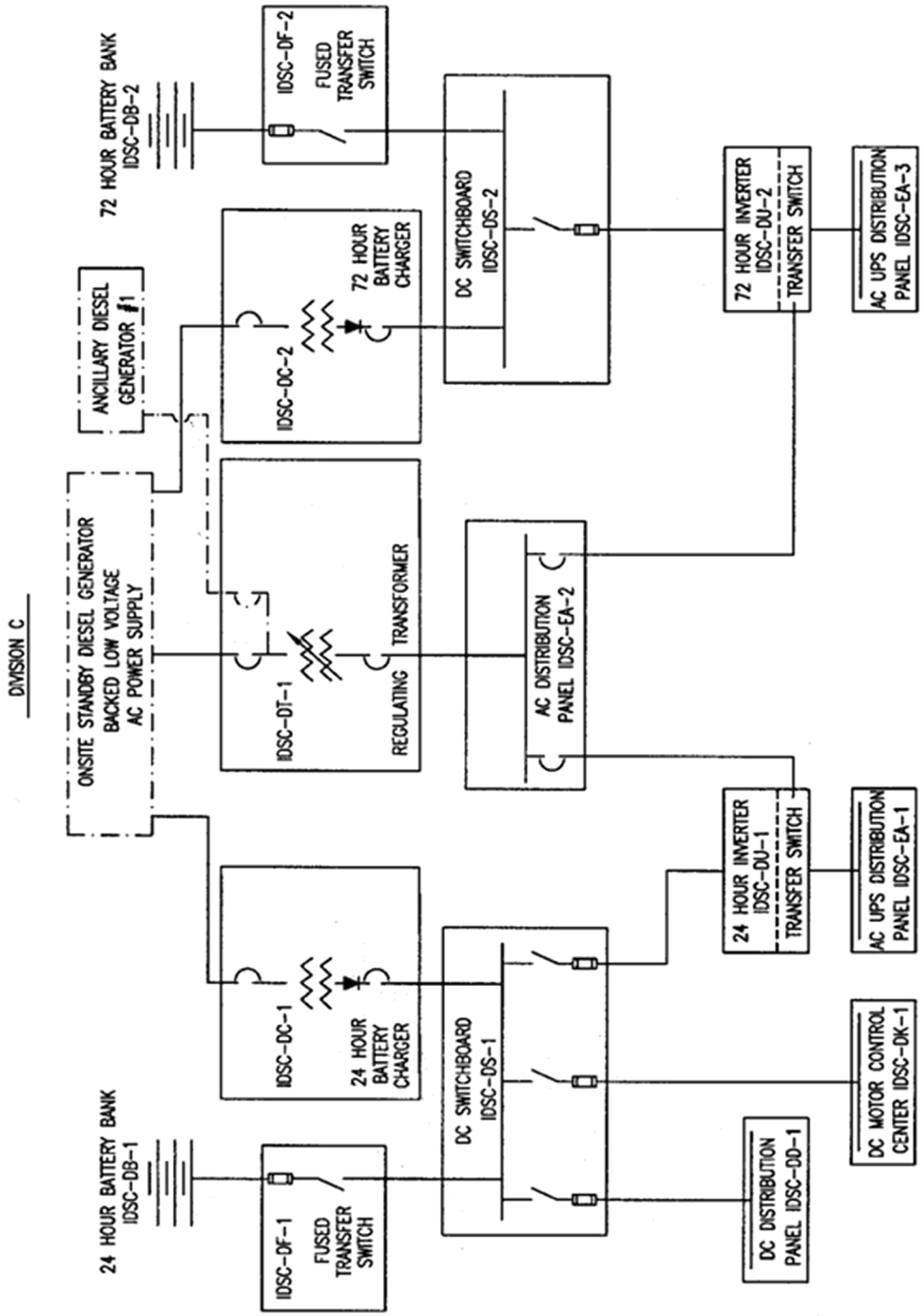

Figure 2.6.3-1 (Sheet 3 of 4)
Class 1E dc and Uninterruptible Power Supply System (Division C)

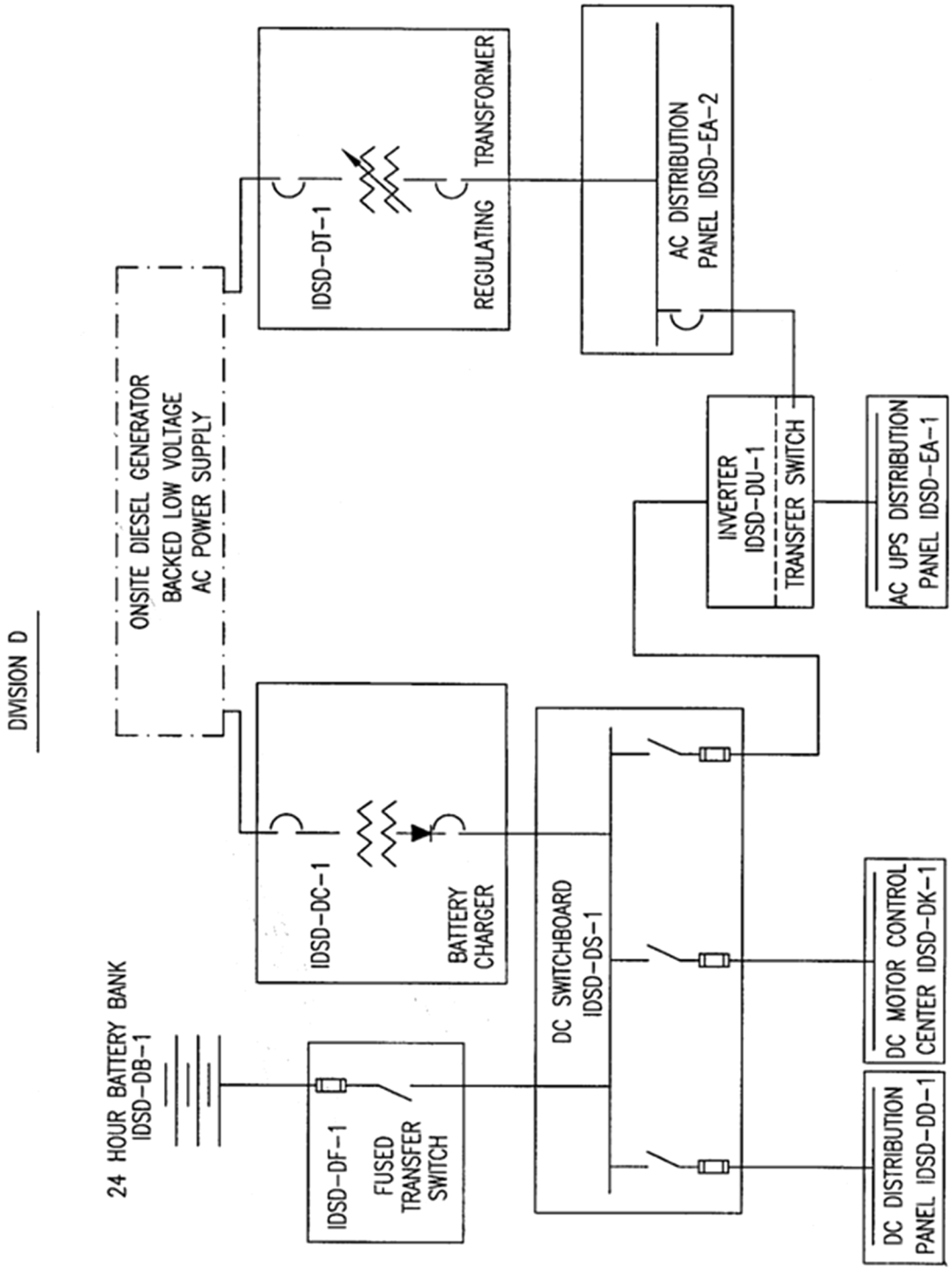

Figure 2.6.3-1 (Sheet 4 of 4)
Class 1E dc and Uninterruptible Power Supply System (Division D)

2.6.4 Onsite Standby Power System

Design Description

The onsite standby power system (ZOS) provides backup ac electrical power for nonsafety-related loads during normal and off-normal conditions.

The ZOS has two standby diesel generator units and the component locations of the ZOS are as shown in Table 2.6.4-2. The centerline of the diesel engine exhaust gas discharge is located more than twenty (20) feet higher than that of the combustion air intake.

1. The functional arrangement of the ZOS is as described in the Design Description of this Section 2.6.4.

2. The ZOS provides the following nonsafety-related functions:

   a) On loss of power to a 6900 volt diesel-backed bus, the associated diesel generator automatically starts and produces ac power at rated voltage and frequency. The source circuit breakers and bus load circuit breakers are opened, and the generator is connected to the bus.

   b) Each diesel generator unit is sized to supply power to the selected nonsafety-related electrical components.

   c) Automatic-sequence loads are sequentially loaded on the associated buses.

3. Displays of diesel generator status (running/not running) and electrical output power (watts) can be retrieved in the main control room (MCR).

4. Controls exist in the MCR to start and stop each diesel generator.

Inspections, Tests, Analyses, and Acceptance Criteria

Table 2.6.4-1 specifies the inspections, tests, analyses, and associated acceptance criteria for the ZOS.

Table 2.6.4-1
Inspections, Tests, Analyses, and Acceptance Criteria

Design Commitment	Inspections, Tests, Analyses	Acceptance Criteria
1. The functional arrangement of the ZOS is as described in the Design Description of this Section 2.6.4.	Inspection of the as-built system will be performed.	The as-built ZOS conforms with the functional arrangement as described in the Design Description of this Section 2.6.4.
2.a) On loss of power to a 6900 volt diesel-backed bus, the associated diesel generator automatically starts and produces ac power at rated voltage and frequency. The source circuit breakers and bus load circuit breakers are opened, and the generator is connected to the bus.	Tests on the as-built ZOS system will be conducted by providing a simulated loss-of-voltage signal. The starting air supply receiver will not be replenished during the test.	Each as-built diesel generator automatically starts on receiving a simulated loss-of-voltage signal and attains a voltage of 6900 ± 10% V and frequency 60 ± 5% Hz after the start signal is initiated and opens ac power system breakers on the associated 6900 V bus.
2.b) Each diesel generator unit is sized to supply power to the selected nonsafety-related electrical components.	Each diesel generator will be operated with a load of 4000 kW or greater and a power factor between 0.9 and 1.0 for a time period required to reach engine temperature equilibrium plus 2.5 hours.	Each diesel generator provides power to the load with a generator terminal voltage of 6900 ± 10% V and a frequency of 60 ± 5% Hz.
2.c) Automatic-sequence loads are sequentially loaded on the associated buses.	An actual or simulated signal is initiated to start the load sequencer operation. Output signals will be monitored to determine the operability of the load sequencer. Time measurements are taken to determine the load stepping intervals.	The load sequencer initiates a closure signal within ±5 seconds of the set intervals to connect the loads.
3. Displays of diesel generator status (running/not running) and electrical output power (watts) can be retrieved in the MCR.	Inspection will be performed for retrievability of the displays in the MCR.	Displays of diesel generator status and electrical output power can be retrieved in the MCR.
4. Controls exist in the MCR to start and stop each diesel generator.	A test will be performed to verify that controls in the MCR can start and stop each diesel generator.	Controls in the MCR operate to start and stop each diesel generator.

Table 2.6.4-2

Component Name	Tag No.	Component Location
Onsite Diesel Generator A Package	ZOS-MS-05A	Diesel Generator Building
Onsite Diesel Generator B Package	ZOS-MS-05B	Diesel Generator Building

2.6.5 Lighting System

Design Description

The lighting system (ELS) provides the normal and emergency lighting in the main control room (MCR) and at the remote shutdown workstation (RSW).

1. The functional arrangement of the ELS is as described in the Design Description of this Section 2.6.5.

2. The ELS has six groups of emergency lighting fixtures located in the MCR and at the RSW. Each group is powered by one of the Class 1E inverters. The ELS has four groups of panel lighting fixtures located on or near safety panels in the MCR. Each group is powered by one of the Class 1E inverters in Divisions B and C (one 24-hour and one 72-hour inverter in each Division).

3. The lighting fixtures located in the MCR utilize seismic supports.

4. The panel lighting circuits are classified as associated and treated as Class 1E. These lighting circuits are routed with the Divisions B and C Class 1E circuits. Separation is provided between ELS associated divisions and between associated divisions and non-Class 1E cable.

5. The normal lighting can provide 50 foot candles at the safety panel and at the workstations in the MCR and at the RSW.

6. The emergency lighting can provide 10 foot candles at the safety panel and at the workstations in the MCR and at the RSW.

Inspections, Tests, Analyses, and Acceptance Criteria

Table 2.6.5-1 specifies the inspections, tests, analyses, and associated acceptance criteria for the ELS.

Table 2.6.5-1
Inspections, Tests, Analyses, and Acceptance Criteria

Design Commitment	Inspections, Tests, Analyses	Acceptance Criteria
1. The functional arrangement of the ELS is as described in the Design Description of this Section 2.6.5.	Inspection of the as-built system will be performed.	The as-built ELS conforms with the functional arrangement as described in the Design Description of this Section 2.6.5.
2. The ELS has six groups of emergency lighting fixtures located in the MCR and at the RSW. Each group is powered by one of the Class 1E inverters. The ELS has four groups of panel lighting fixtures located on or near safety panels in the MCR. Each group is powered by one of the Class 1E inverters in Divisions B and C (one 24-hour and one 72-hour inverter in each Division).	i) Inspection of the as-built system will be performed. ii) Testing of the as-built system will be performed using one Class 1E inverter at a time.	i) The as-built ELS has six groups of emergency lighting fixtures located in the MCR and at the RSW. The ELS has four groups of panel lighting fixtures located on or near safety panels in the MCR. ii) Each of the six as-built emergency lighting groups is supplied power from its respective Class 1E inverter and each of the four as-built panel lighting groups is supplied power from its respective Class 1E inverter.
3. The lighting fixtures located in the MCR utilize seismic supports.	i) Inspection will be performed to verify that the lighting fixtures located in the MCR are located on the Nuclear Island. ii) Analysis of seismic supports will be performed.	i) The lighting fixtures located in the MCR are located on the Nuclear Island. ii) A report exists and concludes that the seismic supports can withstand seismic design basis loads.
4. The panel lighting circuits are classified as associated and treated as Class 1E. These lighting circuits are routed with the Divisions B and C Class 1E circuits. Separation is provided between ELS associated divisions and between associated divisions and non-Class 1E cable.	See Tier 1 Material, Table 3.3-6, item 7.d.	See Tier 1 Material, Table 3.3-6, item 7.d.

Table 2.6.5-1 (cont.)
Inspections, Tests, Analyses, and Acceptance Criteria

Design Commitment	Inspections, Tests, Analyses	Acceptance Criteria
5. The normal lighting can provide 50 foot candles at the safety panel and at the workstations in the MCR and at the RSW.	i) Testing of the as-built normal lighting in the MCR will be performed.	i) When adjusted for maximum illumination and powered by the main ac power system, the normal lighting in the MCR provides at least 50 foot candles at the safety panel and at the workstations.
	ii) Testing of the as-built normal lighting at the RSW will be performed.	ii) When adjusted for maximum illumination and powered by the main ac power system, the normal lighting in the RSW provides at least 50 foot candles at the safety panel and at the workstations.
6. The emergency lighting can provide 10 foot candles at the safety panel and at the workstations in the MCR and at the RSW.	i) Testing of the as-built emergency lighting in the MCR will be performed.	i) When adjusted for maximum illumination and powered by the six Class 1E inverters, the emergency lighting in the MCR provides at least 10 foot candles at the safety panel and at the workstations.
	ii) Testing of the as-built emergency lighting at the RSW will be performed.	ii) When adjusted for maximum illumination and powered by the six Class 1E inverters, the emergency lighting provides at least 10 foot candles at the RSW.

2.6.6 Grounding and Lightning Protection System

Design Description

The grounding and lightning protection system (EGS) provides electrical grounding for instrumentation grounding, equipment grounding, and lightning protection during normal and off-normal conditions.

1. The EGS provides an electrical grounding system for: (1) instrument/computer grounding; (2) electrical system grounding of the neutral points of the main generator, main step-up transformers, auxiliary transformers, load center transformers, and onsite standby diesel generators; and (3) equipment grounding of equipment enclosures, metal structures, metallic tanks, ground bus of switchgear assemblies, load centers, motor control centers, and control cabinets. Lightning protection is provided for exposed structures and buildings housing safety-related and fire protection equipment. Each grounding system and lightning protection system is grounded to the station grounding grid.

Inspections, Tests, Analyses, and Acceptance Criteria

Table 2.6.6-1 specifies the inspections, tests, analyses, and associated acceptance criteria for the EGS.

Table 2.6.6-1
Inspections, Tests, Analyses, and Acceptance Criteria

Design Commitment	Inspections, Tests, Analyses	Acceptance Criteria
1. The EGS provides an electrical grounding system for: (1) instrument/computer grounding; (2) electrical system grounding of the neutral points of the main generator, main step-up transformers, auxiliary transformers, load center transformers, auxiliary and onsite standby diesel generators; and (3) equipment grounding of equipment enclosures, metal structures, metallic tanks, ground bus of switchgear assemblies, load centers, motor control centers, and control cabinets. Lightning protection is provided for exposed structures and buildings housing safety-related and fire protection equipment. Each grounding system and lighting protection system is grounded to the station grounding grid.	i) An inspection for the instrument/computer grounding system connection to the station grounding grid will be performed. ii) An inspection for the electrical system grounding connection to the station grounding grid will be performed. iii) An inspection for the equipment grounding system connection to the station grounding grid will be performed. iv) An inspection for the lightning protection system connection to the station grounding grid will be performed.	i) A connection exists between the instrument/computer grounding system and the station grounding grid. ii) A connection exists between the electrical system grounding and the station grounding grid. iii) A connection exists between the equipment grounding system and the station grounding grid. iv) A connection exists between the lighting protection system and the station grounding grid.

2.6.7 Special Process Heat Tracing System

No entry for this system.

2.6.8 Cathodic Protection System

No entry.

2.6.9 Plant Security System

Design Description

The physical security system provides physical features to detect, delay, assist response to, and defend against the design basis threat (DBT) for radiological sabotage. The physical security system consists of physical barriers and an intrusion detection system. The details of the physical security system are categorized as Safeguards Information. The physical security system provides protection for vital equipment and plant personnel.

1. The external walls, doors, ceiling, and floors in the main control room, the central alarm station, and the secondary alarm station are bullet-resistant to at least Underwriters Laboratory Ballistic Standard 752, level 4.

2. Not used.

3. Secondary security power supply system for alarm annunciator equipment and non-portable communications equipment is located within a vital area.

4. Vital areas are locked and alarmed with active intrusion detection systems that annunciate in the central and secondary alarm stations upon intrusion into a vital area.

5. a) Security alarm annunciation and video assessment information is displayed concurrently in the central alarm station and the secondary alarm station, and the video image recording with real time playback capability can provide assessment of activities before and after each alarm annunciation within the perimeter barrier.

   b) The central and secondary alarm stations are located inside the protected area, and the interior of each alarm station is not visible from the perimeter of the protected area.

   c) The central and secondary alarm stations are designed and equipped such that, in the event of a single act, in accordance with the design basis threat of radiological sabotage, the design enables the survivability of equipment needed to maintain the functional capability of either alarm station to detect and assess alarms and communicate with onsite and offsite response personnel.

6. The vehicle barrier system is installed and located at the necessary stand-off distance to protect against the DBT vehicle bombs.

7. a) Vital equipment is located only within a vital area.

   b) Access to vital equipment requires passage through the vital area barrier.

8. Isolation zones and exterior areas within the protected area are provided with illumination to permit observation of abnormal presence or activity of persons or vehicles.

9. Emergency exits through the vital area boundaries are locked, alarmed, and equipped with a crash bar to allow for emergency egress.

10. Not used.

11. Not used.

12. Not used.

13. a) The central and secondary alarm stations have conventional (landline) telephone service with the main control room and local law enforcement authorities.

    b) The central and secondary alarm stations are capable of continuous communications with security personnel.

    c) Non-portable communication equipment in the central and secondary alarm stations remains operable from an independent power source in the event of loss of normal power.

14. Not used.

15. a) Security alarm devices including transmission lines to annunciators are tamper indicating and self-checking (e.g., an automatic indication is provided when failure of the alarm system or a component occurs, or when on standby power). Alarm annunciation shall indicate the type of alarm (e.g., intrusion alarms and emergency exit alarm) and location.

    b) Intrusion detection and assessment systems concurrently provide visual displays and audible annunciation of alarms in the central and secondary alarm station.

16. Equipment exists to record onsite security alarm annunciation, including the location of the alarm, false alarm, alarm check, and tamper indication; and the type of alarm, location, alarm circuit, date, and time.

Inspections, Tests, Analyses, and Acceptance Criteria

Table 2.6.9-1 specifies the inspections, tests, analyses, and associated acceptance criteria for the physical security system.

Table 2.6.9-1
Inspections, Tests, Analyses, and Acceptance Criteria

Design Commitment	Inspections, Tests, Analyses	Acceptance Criteria
1. The external walls, doors, ceiling, and floors in the main control room, the central alarm station, and the secondary alarm station are bullet-resistant to at least Underwriters Laboratory Ballistic Standard 752, level 4.	See Tier 1 Material, Table 3.3-6, item 14.	See Tier 1 Material, Table 3.3-6, item 14.
2. Not used.		
3. Secondary security power supply system for alarm annunciator equipment and non-portable communications equipment is located within the vital area.	See Tier 1 Material, Table 3.3-6, item 16.	See Tier 1 Material, Table 3.3-6, item 16.
4. Vital areas are locked and alarmed with active intrusion detection systems that annunciate in the central and secondary alarm stations upon intrusion into a vital area.	See Tier 1 Material, Table 3.3-6, item 17.	See Tier 1 Material, Table 3.3-6, item 17.
5.a) Security alarm annunciation and video assessment information is displayed concurrently in the central alarm station and the secondary alarm station, and the video image recording with real time playback capability can provide assessment of activities before and after each alarm annunciation within the perimeter area barrier.	Test, inspection, or a combination of test and inspections of the installed systems will be performed.	Security alarm annunciation and video assessment information is displayed concurrently in the central alarm station and the secondary alarm station, and the video image recording with real time playback capability provides assessment of activities before and after alarm annunciation within the perimeter barrier.
5.b) The central and secondary alarm stations are located inside the protected area, and the interior of each alarm station is not visible from the perimeter of the protected area.	Inspections of the central and secondary alarm stations will be performed.	The central and secondary alarm stations are located inside the protected area, and the interior of each alarm station is not visible from the perimeter of the protected area.

Table 2.6.9-1 (cont.)
Inspections, Tests, Analyses, and Acceptance Criteria

Design Commitment	Inspections, Tests, Analyses	Acceptance Criteria
5.c) The central and secondary alarm stations are designed and equipped such that, in the event of a single act, in accordance with the design basis threat of radiological sabotage, the design enables the survivability of equipment needed to maintain the functional capability of either alarm station to detect and assess alarms and communicate with onsite and offsite response personnel.	Inspections and/or analysis of the central and secondary alarm station will be performed.	The central and secondary alarm stations are designed and equipped such that, in the event of a single act, in accordance with the design basis threat of radiological sabotage, equipment needed to maintain the functional capability of either alarm station to detect and assess alarms and communicate with onsite and offsite response personnel exists.
6. The vehicle barrier system is installed and located at the necessary stand-off distance to protect against the DBT vehicle bombs.	Inspections and analysis will be performed for the vehicle barrier system .	The vehicle barrier system will protect against the DBT vehicle bombs based upon the stand-off distance of the system.
7.a) Vital equipment is located only within a vital area.	Inspection will be performed to confirm that vital equipment is located within a vital area.	All vital equipment is located only within a vital area.
7.b) Access to vital equipment requires passage through the vital area barrier.	Inspection will be performed to confirm that access to vital equipment requires passage through the vital area barrier.	Vital equipment is located within a protected area such that access to vital equipment requires passage through the vital area barrier.
8. Isolation zones and exterior areas within the protected area are provided with illumination to permit observation of abnormal presence or activity of persons or vehicles.	Inspection of the illumination in the isolation zones and external areas of the protected area will be performed.	The illumination in isolation zones and exterior areas within the protected area is 0.2 foot candles measured horizontally at ground level or, alternatively, sufficient to permit observation.
9. Emergency exits through the vital area boundaries are locked, alarmed, and equipped with a crash bar to allow for emergency egress.	Test, inspection, or a combination of tests and inspections of the emergency exits through the vital area boundaries will be performed.	The emergency exits through the vital area boundaries are locked, alarmed, and equipped with a crash bar to allow for emergency egress.
10. Not used.	.	
11. Not used.		
12. Not used.		

Table 2.6.9-1 (cont.)
Inspections, Tests, Analyses, and Acceptance Criteria

Design Commitment	Inspections, Tests, Analyses	Acceptance Criteria
13.a) The central and secondary alarm stations have conventional (landline) telephone service with the main control room and local law enforcement authorities.	Tests, inspections, or a combination of tests and inspections of the central and secondary alarm stations' conventional telephone services will be performed.	The central and secondary alarm stations are equipped with conventional (landline) telephone service with the main control room and local law enforcement authorities.
13.b) The central and secondary alarm stations are capable of continuous communication with security personnel.	Tests, inspections, or a combination of tests and inspections of the central and secondary alarm stations' continuous communication capabilities will be performed.	The central and secondary alarm stations are equipped with the capability to continuously communicate with security officers, watchmen, armed response individuals, or any security personnel that have responsibilities during a contingency event.
13.c) Non-portable communication equipment in the central and secondary alarm stations remains operable from an independent power source in the event of loss of normal power.	Tests, inspections, or a combination of tests and inspections of the non-portable communications equipment will be performed.	Non-portable communication devices (including conventional telephone systems) in the central and secondary alarm stations are wired to an independent power supply that enables the system to remain operable in the event of loss of normal power.
14. Not used.		
15.a) Security alarm devices, including transmission lines to annunciators, are tamper indicating and self-checking (e.g., an automatic indication is provided when failure of the alarm system or a component occurs, or when on standby power). Alarm annunciation shall indicate the type of alarm (e.g., intrusion alarms and emergency exit alarm) and location.	A test will be performed to verify that security alarms, including transmission lines to annunciators, are tamper indicating and self-checking (e.g., an automatic indication is provided when failure of the alarm system or a component occurs, or when on standby power) and that alarm annunciation indicates the type of alarm (e.g., intrusion alarms and emergency exit alarms) and location.	A report exists and concludes that security alarm devices, including transmission lines to annunciators, are tamper indicating and self-checking (e.g., an automatic indication is provided when failure of the alarm system or a component occurs, or when the system is on standby power) and that alarm annunciation indicates the type of alarm (e.g., intrusion alarms and emergency exit alarms) and location.

Table 2.6.9-1 (cont.)
Inspections, Tests, Analyses, and Acceptance Criteria

Design Commitment	Inspections, Tests, Analyses	Acceptance Criteria
15.b) Intrusion detection and assessment systems concurrently provide visual displays and audible annunciation of alarms in the central and secondary alarm stations.	Tests will be performed on intrusion detection and assessment equipment.	The intrusion detection system concurrently provides visual displays and audible annunciations of alarms in both the central and secondary alarm stations.
16. Equipment exists to record onsite security alarm annunciation, including the location of the alarm, false alarm, alarm check, and tamper indication; and the type of alarm, location, alarm circuit, date, and time.	Test, analysis, or a combination of test and analysis will be performed to ensure that equipment is capable of recording each onsite security alarm annunciation, including the location of the alarm, false alarm, alarm check, and tamper indication; and the type of alarm, location, alarm circuit, date, and time.	A report exists and concludes that equipment is capable of recording each onsite security alarm annunciation, including the location of the alarm, false alarm, alarm check, and tamper indication; and the type of alarm, location, alarm circuit, date, and time.

2.6.10 Main Generation System

No entry. Covered in Section 2.6.1, Main ac Power System.

2.6.11 Excitation and Voltage Regulation System

No entry for this system.

2.7 HVAC Systems

2.7.1 Nuclear Island Nonradioactive Ventilation System

Design Description

The nuclear island nonradioactive ventilation system (VBS) serves the main control room (MCR), control support area (CSA), Class 1E dc equipment rooms, Class 1E instrumentation and control (I&C) rooms, Class 1E electrical penetration rooms, Class 1E battery rooms, remote shutdown room (RSR), reactor coolant pump trip switchgear rooms, adjacent corridors, and passive containment cooling system (PCS) valve room during normal plant operation. The VBS consists of the following independent subsystems: the main control room/control support area HVAC subsystem, the class 1E electrical room HVAC subsystem, and the passive containment cooling system valve room heating and ventilation subsystem. The VBS provides heating, ventilation, and cooling to the areas served when ac power is available. The system provides breathable air to the control room and maintains the main control room and control support area areas at a slightly positive pressure with respect to the adjacent rooms and outside environment during normal operations. The VBS monitors the main control room supply air for radioactive particulate and iodine concentrations and provides filtration of main control room/control support area air during conditions of abnormal (high) airborne radioactivity. In addition, the VBS isolates the HVAC penetrations in the main control room boundary on "High-2" particulate or iodine radioactivity in the main control room supply air duct or on a loss of ac power for more than 10 minutes. The Sanitary Drainage System (SDS) also isolates a penetration in the main control room boundary on "High-2" particulate or iodine radioactivity in the main control room supply air duct or on a loss of ac power for more than 10 minutes. Additional penetrations from the SDS and Potable Water System (PWS) into the main control room boundary are maintained leak tight using a loop seal in the piping, and the Waste Water System (WWS) is isolated using a normally closed safety related manual isolation valve. These features support operation of the main control room emergency habitability system (VES), and have been included in Tables 2.7.1-1 and 2.7.1-2.

The VBS is as shown in Figure 2.7.1-1 and the component locations of the VBS are as shown in Table 2.7.1-5.

1. The functional arrangement of the VBS is as described in the Design Description of this subsection 2.7.1.

2. a) The components identified in Table 2.7.1-1 as ASME Code Section III are designed and constructed in accordance with ASME Code Section III requirements.

   b) The piping identified in Table 2.7.1-2 as ASME Code Section III is designed and constructed in accordance with ASME Code Section III requirements.

3. a) Pressure boundary welds in components identified in Table 2.7.1-1 as ASME Code Section III meet ASME Code Section III requirements.

   b) Pressure boundary welds in piping identified in Table 2.7.1-2 as ASME Code Section III meet ASME Code Section III requirements.

4. a) The components identified in Table 2.7.1-1 as ASME Code Section III retain their pressure boundary integrity at their design pressure.

   b) The piping identified in Table 2.7.1-2 as ASME Code Section III retains its pressure boundary integrity at its design pressure.

5. The seismic Category I equipment identified in Table 2.7.1-1 can withstand seismic design basis loads without loss of safety function.

6. a) The Class 1E components identified in Table 2.7.1-1 are powered from their respective Class 1E division.

   b) Separation is provided between VBS Class 1E divisions, and between Class 1E divisions and non-Class 1E cable.

7. The VBS and SDS provide the safety-related function to isolate the pipes that penetrate the MCR pressure boundary.

8. The VBS provides the following nonsafety-related functions:

   a) The VBS provides cooling to the MCR, CSA, RSR, and Class 1E electrical rooms.

   b) The VBS provides ventilation cooling to the Class 1E battery rooms.

   c) The VBS maintains MCR and CSA habitability when radioactivity is detected.

   d) The VBS provides ventilation cooling via the ancillary equipment in Table 2.7.1-3 to the MCR and the division B&C Class 1E I&C rooms.

9. Safety-related displays identified in Table 2.7.1-1 can be retrieved in the MCR.

10. a) Controls exist in the MCR to cause the remotely operated valves identified in Table 2.7.1-1 to perform their active functions.

    b) The valves identified in Table 2.7.1-1 as having protection and safety monitoring system (PMS) control perform their active safety function after receiving a signal from the PMS.

11. After loss of motive power, the valves identified in Table 2.7.1-1 assume the indicated loss of motive power position.

12. Controls exist in the MCR to cause the components identified in Table 2.7.1-3 to perform the listed function.

13. Displays of the parameters identified in Table 2.7.1-3 can be retrieved in the MCR.

14. The background noise level in the MCR and RSR does not exceed 65 dB(A) when the VBS is operating.

Inspections, Tests, Analyses, and Acceptance Criteria

Table 2.7.1-4 specifies the inspections, tests, analyses, and associated acceptance criteria for the VBS.

Table 2.7.1-1

Equipment Name	Tag No.	ASME Code Section III	Seismic Cat. I	Remotely Operated Valve	Class 1E/ Qual. for Harsh Envir.	Safety-Related Display	Control PMS/DAS(1)	Active Function	Loss of Motive Power Position
MCR Supply Air Isolation Valve	VBS-PL-V186	Yes	Yes	Yes	Yes/No	Yes (Valve Position)	Yes/No	Transfer Closed	As Is
MCR Supply Air Isolation Valve	VBS-PL-V187	Yes	Yes	Yes	Yes/No	Yes (Valve Position)	Yes/No	Transfer Closed	As Is
MCR Return Air Isolation Valve	VBS-PL-V188	Yes	Yes	Yes	Yes/No	Yes (Valve Position)	Yes/No	Transfer Closed	As Is
MCR Return Air Isolation Valve	VBS-PL-V189	Yes	Yes	Yes	Yes/No	Yes (Valve Position)	Yes/No	Transfer Closed	As Is
MCR Exhaust Air Isolation Valve	VBS-PL-V190	Yes	Yes	Yes	Yes/No	Yes (Valve Position)	Yes/No	Transfer Closed	As Is
MCR Exhaust Air Isolation Valve	VBS-PL-V191	Yes	Yes	Yes	Yes/No	Yes (Valve Position)	Yes/No	Transfer Closed	As Is
PWS MCR Isolation Valve	PWS-PL-V418	Yes	Yes	No	-/-	No	No	Transfer Closed	-
PWS MCR Isolation Valve	PWS-PL-V420	Yes	Yes	No	-/-	No	No	Transfer Closed	-
PWS MCR Vacuum Relief	PWS-PL-V498	Yes	Yes	No	-/-	No	No	Transfer Open	-
MCR SDS (Vent) Isolation Valve	SDS-PL-V001	Yes	Yes	Yes	Yes/No	Yes (Valve Position)	Yes/No	Transfer Closed	As Is
MCR SDS (Vent) Isolation Valve	SDS-PL-V002	Yes	Yes	Yes	Yes/No	Yes (Valve Position)	Yes/No	Transfer Closed	As Is

Table 2.7.1-1 (cont.)

Equipment Name	Tag No.	ASME Code Section III	Seismic Cat. I	Remotely Operated Valve	Class 1E/ Qual. for Harsh Envir.	Safety-Related Display	Control PMS/DAS(1)	Active Function	Loss of Motive Power Position
MCR WWS Isolation Valve	WWS-PL-V506	Yes	Yes	No	–	No	No	–	–

1. DAS = diverse actuation system

Table 2.7.1-2

Line Name	Line Number	ASME Code Section III	Leak Before Break	Functional Capability Required
Main Control Room Supply	VBS-L311	Yes	No	No
Main Control Room Exhaust	VBS-L312	Yes	No	No
Main Control Room Toilet Exhaust	VBS-L313	Yes	No	No
Main Control Room Sanitary Vent Line	SDS-PL-L035	Yes	No	No
Main Control Room Sanitary Drain Line	SDS-PL-L030	Yes	No	No
Main Control Room Water Line	PWS-PL-L319	Yes	No	No
Main Control Room Water Line	PWS-PL-L320	Yes	No	No
Main Control Room Waste Water Line	WWS-PL-L808	Yes	No	No
Main Control Room Water Line	WWS-PL-L851	Yes	No	No

Table 2.7.1-3

Equipment	Tag No.	Display	Control Function
Supplemental Air Filtration Unit Fan A	VBS-MA-03A	Yes (Run Status)	Start
Supplemental Air Filtration Unit Fan B	VBS-MA-03B	Yes (Run Status)	Start
MCR/CSA Supply Air Handling Units (AHU) A Fans	VBS-MA-01A VBS-MA-02A	Yes (Run Status)	Start
MCR/CSA Supply AHU B Fans	VBS-MA-01B VBS-MA-02B	Yes (Run Status)	Start
Division "A" and "C" Class 1E Electrical Room AHU A Fans	VBS-MA-05A VBS-MA-06A	Yes (Run Status)	Start
Division "A" and "C" Class 1E Electrical Room AHU C Fans	VBS-MA-05C VBS-MA-06C	Yes (Run Status)	Start
Division "B" and "D" Class 1E Electrical Room AHU B Fans	VBS-MA-05B VBS-MA-06B	Yes (Run Status)	Start
Division "B" and "D" Class 1E Electrical Room AHU D Fans	VBS-MA-05D VBS-MA-06D	Yes (Run Status)	Start
Division "A" and "C" Class 1E Battery Room Exhaust Fans	VBS-MA-07A VBS-MA-07C	Yes (Run Status)	Start
Division "B" and "D" Class 1E Battery Room Exhaust Fans	VBS-MA-07B VBS-MA-07D	Yes (Run Status)	Start
MCR Ancillary Fans	VBS-MA-10A VBS-MA-10B	No	Run
Division B Room Ancillary Fan	VBS-MA-11	No	Run
Division C Room Ancillary Fan	VBS-MA-12	No	Run

Table 2.7.1-4
Inspections, Tests, Analyses, and Acceptance Criteria

Design Commitment	Inspections, Tests, Analyses	Acceptance Criteria
1. The functional arrangement of the VBS is as described in the Design Description of this subsection 2.7.1	Inspection of the as-built system will be performed.	The as-built VBS conforms with the functional arrangement described in the Design Description of this subsection 2.7.1.
2.a) The components identified in Table 2.7.1-1 as ASME Code Section III are designed and constructed in accordance with ASME Code Section III requirements.	Inspection will be conducted of the as-built components as documented in the ASME design reports.	The ASME Code Section III design reports exist for the as-built components identified in Table 2.7.1-1 as ASME Code Section III.
2.b) The piping identified in Table 2.7.1-2 as ASME Code Section III is designed and constructed in accordance with ASME Code Section III requirements.	Inspection will be conducted of the as-built components as documented in the ASME design reports.	The ASME code Section III design reports exist for the as-built piping identified in Table 2.7.1-2 as ASME Code Section III.
3.a) Pressure boundary welds in components identified in Table 2.7.1-1 as ASME Code Section III meet ASME Code Section III requirements.	Inspection of the as-built pressure boundary welds will be performed in accordance with the ASME Code Section III.	A report exists and concludes that the ASME Code Section III requirements are met for nondestructive examination of pressure boundary welds.
3.b) Pressure boundary welds in piping identified in Table 2.7.1-2 as ASME Code Section III meet ASME Code Section III requirements.	Inspection of the as-built pressure boundary welds will be performed in accordance with the ASME Code Section III.	A report exists and concludes that the ASME Code Section III requirements are met for nondestructive examination of pressure boundary welds.
4.a) The components identified in Table 2.7.1-1 as ASME Code Section III retain their pressure boundary integrity at their design pressure.	A pressure test will be performed on the components required by the ASME Code Section III to be pressure tested.	A report exists and concludes that the results of the pressure test of the components identified in Table 2.7.1-1 as ASME Code Section III conform with the requirements of the ASME Code Section III.
4.b) The piping identified in Table 2.7.1-2 as ASME Code Section III retains its pressure boundary integrity at its design pressure.	A pressure test will be performed on the piping required by the ASME Code Section III to be pressure tested.	A report exists and concludes that the results of the pressure test of the piping identified in Table 2.7.1-2 as ASME Code Section III conform with the requirements of the ASME Code Section III.

Table 2.7.1-4 (cont.)
Inspections, Tests, Analyses, and Acceptance Criteria

Design Commitment	Inspections, Tests, Analyses	Acceptance Criteria
5. The seismic Category I equipment identified in Table 2.7.1-1 can withstand seismic design basis loads without loss of safety function.	i) Inspection will be performed to verify that the seismic Category I equipment identified in Table 2.7.1-1 is located on the Nuclear Island. ii) Type tests, analyses, or a combination of type tests and analyses of seismic Category I equipment will be performed. iii) Inspection will be performed for the existence of a report verifying that the as-built equipment including anchorage is seismically bounded by the tested or analyzed conditions.	i) The seismic Category I equipment identified in Table 2.7.1-1 is located on the Nuclear Island. ii) A report exists and concludes that the seismic Category I equipment can withstand seismic design basis loads without loss of safety function. iii) A report exists and concludes that the as-built equipment including anchorage is seismically bounded by the tested or analyzed conditions.
6.a) The Class 1E components identified in Table 2.7.1-1 are powered from their respective Class 1E division.	Testing will be performed on the VBS by providing a simulated test signal in each Class 1E division.	A simulated test signal exists at the Class 1E equipment identified in Table 2.7.1-1 when the assigned Class 1E division is provided the test signal.
6.b) Separation is provided between VBS Class 1E divisions, and between Class 1E divisions and non-Class 1E cable.	See Tier 1 Material, Table 3.3-6, item 7.d.	See Tier 1 Material, Table 3.3-6, item 7.d.
7. The VBS and SDS provide the safety-related function to isolate the pipe that penetrates the MCR pressure boundary.	See item 10.b in this table.	See item 10.b in this table.
8.a) The VBS provides cooling to the MCR, CSA, RSR, and Class 1E electrical rooms.	See item 12 in this table.	See item 12 in this table.
8.b) The VBS provides ventilation cooling to the Class 1E battery rooms.	See item 12 in this table.	See item 12 in this table.

Table 2.7.1-4 (cont.)
Inspections, Tests, Analyses, and Acceptance Criteria

Design Commitment	Inspections, Tests, Analyses	Acceptance Criteria
8.c) The VBS maintains MCR and CSA habitability when radioactivity is detected.	See item 12 in this table.	See item 12 in this table.
8.d) The VBS provides ventilation cooling via the ancillary equipment in Table 2.7.1-3 to the MCR and the division B&C Class 1E I&C rooms.	Testing will be performed on the components in Table 2.7.1-3.	The fans start and run.
9. Safety-related displays identified in Table 2.7.1-1 can be retrieved in the MCR.	Inspection will be performed for retrievability of the safety-related displays in the MCR.	Safety-related displays identified in Table 2.7.1-1 can be retrieved in the MCR.
10.a) Controls exist in the MCR to cause the remotely operated valves identified in Table 2.7.1-1 to perform their active functions.	Stroke testing will be performed on the remotely operated valves identified in Table 2.7.1-1 using the controls in the MCR.	Controls in the MCR operate to cause the remotely operated valves identified in Table 2.7.1-1 to perform their active functions.
10.b) The valves identified in Table 2.7.1-1 as having PMS control perform their active safety function after receiving a signal from the PMS.	Testing will be performed using real or simulated signals into the PMS.	The valves identified in Table 2.7.1-1 as having PMS control perform their active safety function after receiving a signal from PMS.
11. After loss of motive power, the remotely operated valves identified in Table 2.7.1-1 assume the indicated loss of motive power position.	Testing of the remotely operated valves will be performed under the conditions of loss of motive power.	Upon loss of motive power, each remotely operated valves identified in Table 2.7.1-1 assumes the indicated loss of motive power position.
12. Controls exist in the MCR to cause the components identified in Table 2.7.1-3 to perform the listed function.	Testing will be performed on the components in Table 2.7.1-3 using controls in the MCR.	Controls in the MCR operate to cause the components listed in Table 2.7.1-3 to perform the listed functions.
13. Displays of the parameters identified in Table 2.7.1-3 can be retrieved in the MCR.	Inspection will be performed for retrievability of the parameters in the MCR.	The displays identified in Table 2.7.1-3 can be retrieved in the MCR.
14. The background noise level in the MCR and RSR does not exceed 65 dB(A) when the VBS is operating.	The as-built VBS will be operated, and background noise levels in the MCR and RSR will be measured.	The background noise level in the MCR and RSR does not exceed 65 dB(A) when the VBS is operating.

Table 2.7.1-5

Component Name	Tag No.	Component Location
Supplemental Air Filtration Unit A	VBS-MS-01A	Auxiliary Building
Supplemental Air Filtration Unit B	VBS-MS-01B	Auxiliary Building
MCR/CSA Supply Air Handling Unit A	VBS-MS-02A	Auxiliary Building
MCR/CSA Supply Air Handling Unit B	VBS-MS-02B	Annex Building
Division "A" and "C" Class 1E Electrical Room AHU A	VBS-MS-03A	Auxiliary Building
Division "A" and "C" Class 1E Electrical Room AHU C	VBS-MS-03C	Auxiliary Building
Division "B" and "D" Class 1E Electrical Room AHU B	VBS-MS-03B	Auxiliary Building
Division "B" and "D" Class 1E Electrical Room AHU D	VBS-MS-03D	Auxiliary Building
MCR Toilet Exhaust Fan	VBS-MA-04	Auxiliary Building
Division "A&C" Class 1E Battery Room Exhaust Fan	VBS-MA-07A	Auxiliary Building
Division "A&C" Class 1E Battery Room Exhaust Fan	VBS-MA-07C	Auxiliary Building
Division "B&D" Class 1E Battery Room Exhaust Fan	VBS-MA-07B	Auxiliary Building
Division "B&D" Class 1E Battery Room Exhaust Fan	VBS-MA-07D	Auxiliary Building
PCS Valve Room Vent Fan	VBS-MA-08	Containment Shield Building
CSA Toilet Exhaust Fan	VBS-MA-09	Annex Building
MCR Ancillary Fan A	VBS-MA-10A	Auxiliary Building
MCR Ancillary Fan B	VBS-MA-10B	Auxiliary Building
Division B Ancillary Fan	VBS-MA-11	Auxiliary Building
Division C Ancillary Fan	VBS-MA-12	Auxiliary Building

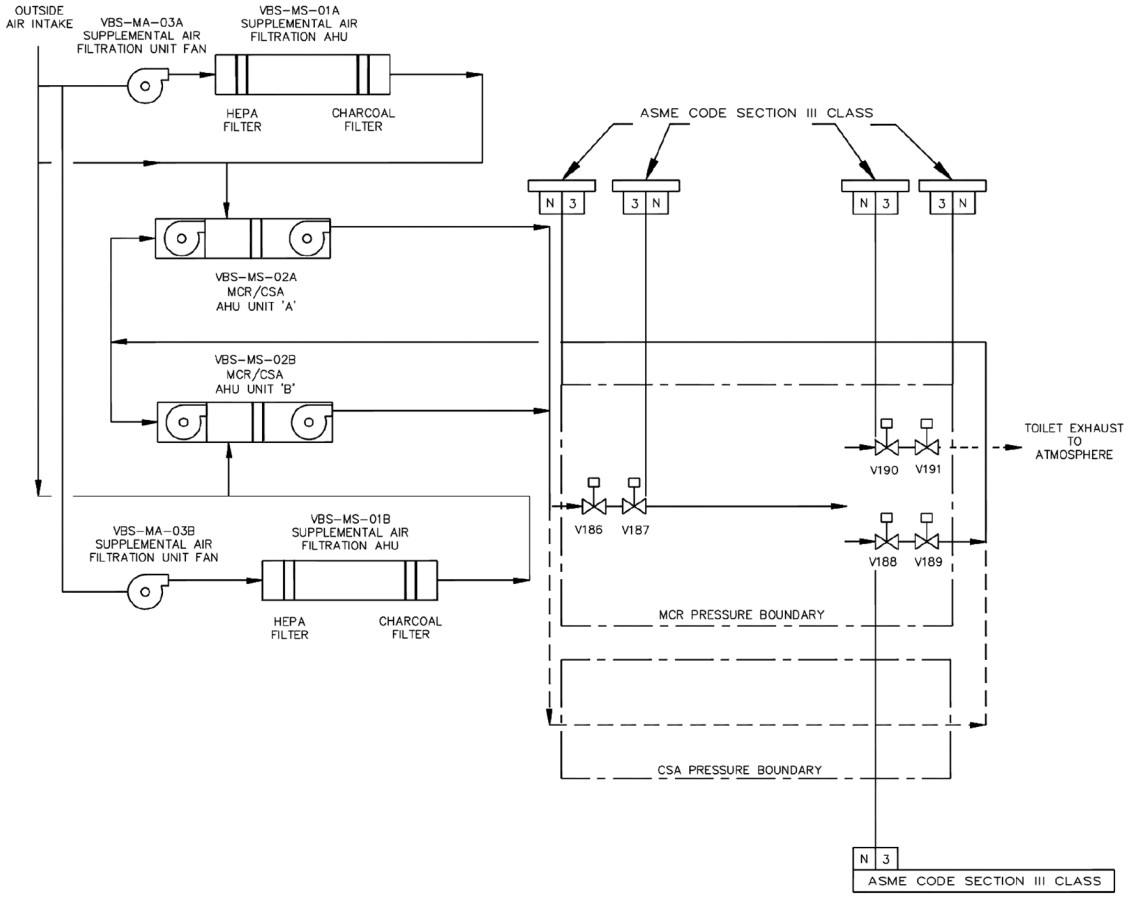

Figure 2.7.1-1 (Sheet 1 of 2)
Nuclear Island Nonradioactive Ventilation System

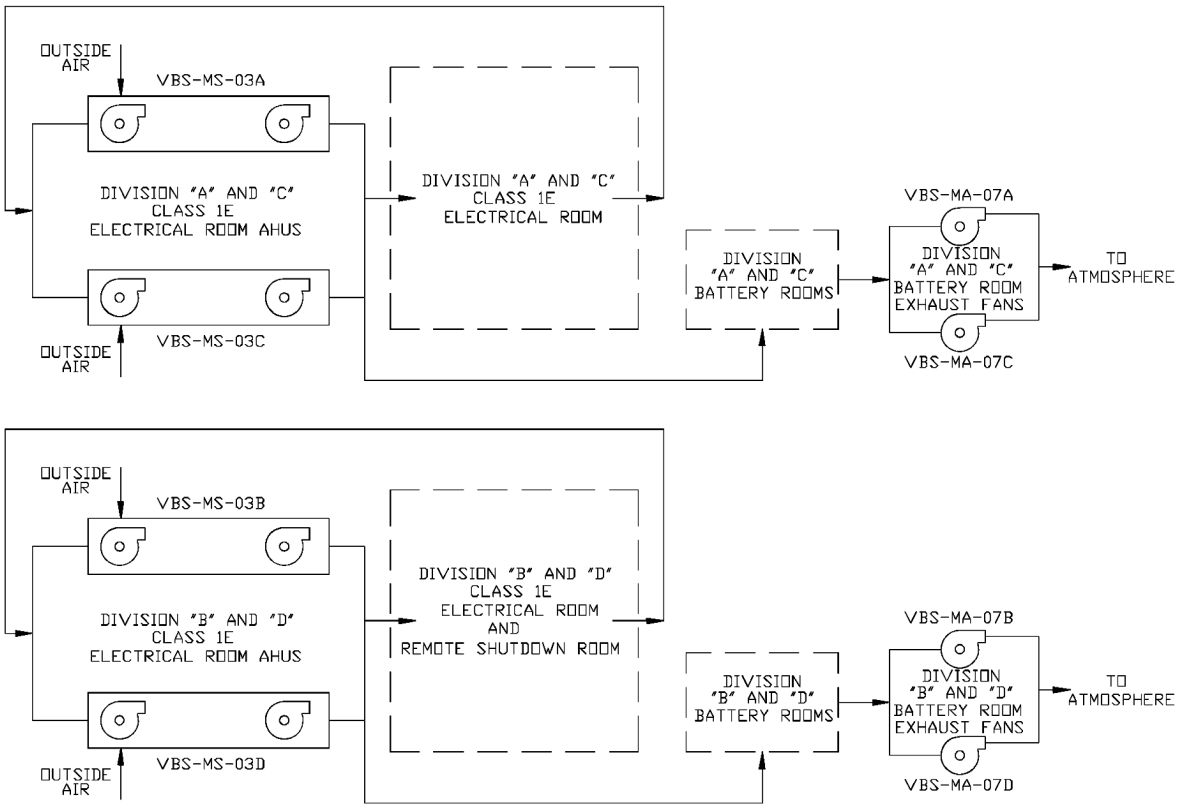

Figure 2.7.1-1 (Sheet 2 of 2)
Nuclear Island Nonradioactive Ventilation System

2.7.2 Central Chilled Water System

Design Description

The plant heating, ventilation, and air conditioning (HVAC) systems require chilled water as a cooling medium to satisfy the ambient air temperature requirements for the plant. The central chilled water system (VWS) supplies chilled water to the HVAC systems and is functional during reactor full-power and shutdown operation. The VWS also provides chilled water to selected process systems.

The VWS is as shown in Figure 2.7.2-1 and the component locations of the VWS are as shown Table 2.7.2-3.

1. The functional arrangement of the VWS is as described in the Design Description of this Section 2.7.2.

2. The VWS provides the safety-related function of preserving containment integrity by isolation of the VWS lines penetrating the containment.

3. The VWS provides the following nonsafety-related functions:

   a) The VWS provides chilled water to the supply air handling units serving the MCR, the Class 1E electrical rooms, and the unit coolers serving the RNS and CVS pump rooms.

   b) The VWS air-cooled chillers transfer heat from the VWS to the surrounding atmosphere.

4. Controls exist in the MCR to cause the components identified in Table 2.7.2-1 to perform the listed function.

5. Displays of the parameters identified in Table 2.7.2-1 can be retrieved in the MCR.

Inspections, Tests, Analyses, and Acceptance Criteria

Table 2.7.2-2 specifies the inspections, tests, analyses, and associated acceptance criteria for the VWS.

Table 2.7.2-1

Equipment Name	Tag No.	Display	Control Function
Air-cooled Chiller	VWS-MS-02	Yes (Run Status)	Start
Air-cooled Chiller	VWS-MS-03	Yes (Run Status)	Start
Air-cooled Chiller Pump	VWS-MP-02	Yes (Run Status)	Start
Air-cooled Chiller Pump	VWS-MP-03	Yes (Run Status)	Start
CVS Pump Room Unit Cooler Fan A	VAS-MA-07A	Yes (Run Status)	Start
CVS Pump Room Unit Cooler Fan B	VAS-MA-07B	Yes (Run Status)	Start
RNS Pump Room Unit Cooler Fan A	VAS-MA-08A	Yes (Run Status)	Start
RNS Pump Room Unit Cooler Fan B	VAS-MA-08B	Yes (Run Status)	Start
Air-cooled Chiller Water Valve	VWS-PL-V210	Yes (Position Status)	Open
Air-cooled Chiller Water Valve	VWS-PL-V253	Yes (Position Status)	Open

Table 2.7.2-2
Inspections, Tests, Analyses, and Acceptance Criteria

Design Commitment	Inspections, Tests, Analyses	Acceptance Criteria
1. The functional arrangement of the VWS is as described in the Design Description of this Section 2.7.2.	Inspection of the as-built system will be performed.	The as-built VWS conforms with the functional arrangement as described in the Design Description of this Section 2.7.2.
2. The applicable portions of the VWS provide the safety-related function of preserving containment integrity by isolation of the VWS lines penetrating the containment.	See Tier 1 Material, Table 2.2.1-3, items 1 and 7.	See Tier 1 Material, Table 2.2.1-3, items 1 and 7.
3.a) The VWS provides chilled water to the supply air handling units serving the MCR, the Class 1E electrical rooms, and the unit coolers serving the RNS and CVS pump rooms.	Testing will be performed by measuring the flow rates to the chilled water cooling coils.	The water flow to each cooling coil equals or exceeds the following: Coil — Flow (gpm) VBS MY C01A/B — 138 VBS MY C02A/C — 108 VBS MY C02B/D — 84 VAS MY C07A/B — 24 VAS MY C12A/B — 15 VAS MY C06A/B — 15
3.b) The VWS air-cooled chillers transfer heat from the VWS to the surrounding atmosphere.	Inspection will be performed for the existence of a report that determines the heat transfer capability of each air-cooled chiller.	A report exists and concludes that the heat transfer rate of each air-cooled chiller is greater than or equal to 230 tons.
4. Controls exist in the MCR to cause the components identified in Table 2.7.2-1 to perform the listed function.	Testing will be performed on the components in Table 2.7.2-1 using controls in the MCR.	Controls in the MCR operate to cause the components listed in Table 2.7.2-1 to perform the listed functions.
5. Displays of the parameters identified in Table 2.7.2-1 can be retrieved in the MCR.	Inspection will be performed for retrievability of parameters in the MCR.	The displays identified in Table 2.7.2-1 can be retrieved in the MCR.

Table 2.7.2-3

Component Name	Tag No.	Component Location
Water Chiller Pump A	VWS-MP-01A	Turbine Building
Water Chiller Pump B	VWS-MP-01B	Turbine Building
Air Cooled Chiller Pump 2	VWS-MP-02	Auxiliary Building
Air Cooled Chiller Pump 3	VWS-MP-03	Auxiliary Building
Water Chiller A	VWS-MS-01A	Turbine Building
Water Chiller B	VWS-MS-01B	Turbine Building
Air Cooled Chiller 2	VWS-MS-02	Auxiliary Building
Air Cooled Chiller 3	VWS-MS-03	Auxiliary Building

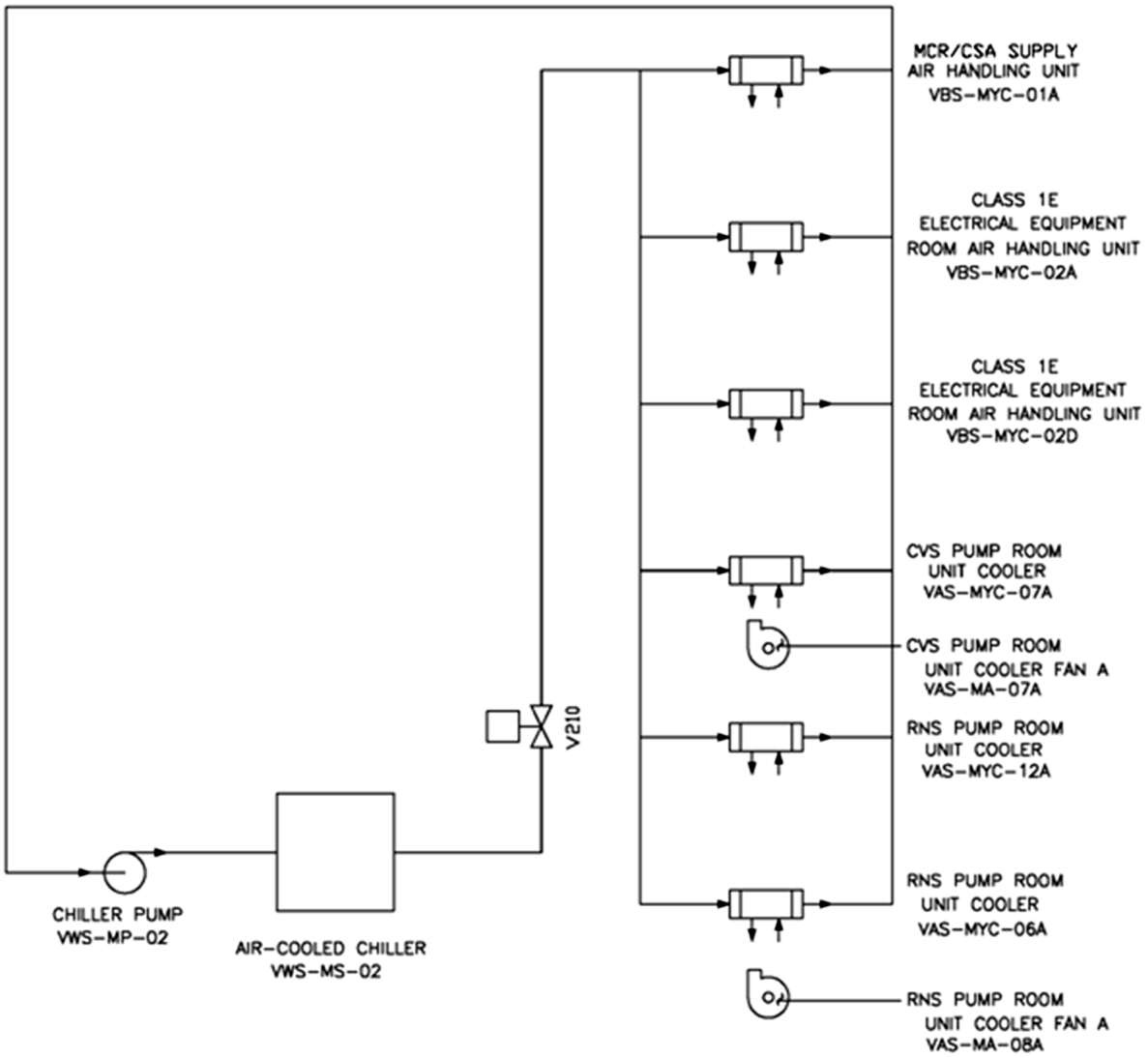

Figure 2.7.2-1 (Sheet 1 of 2)
Central Chilled Water System

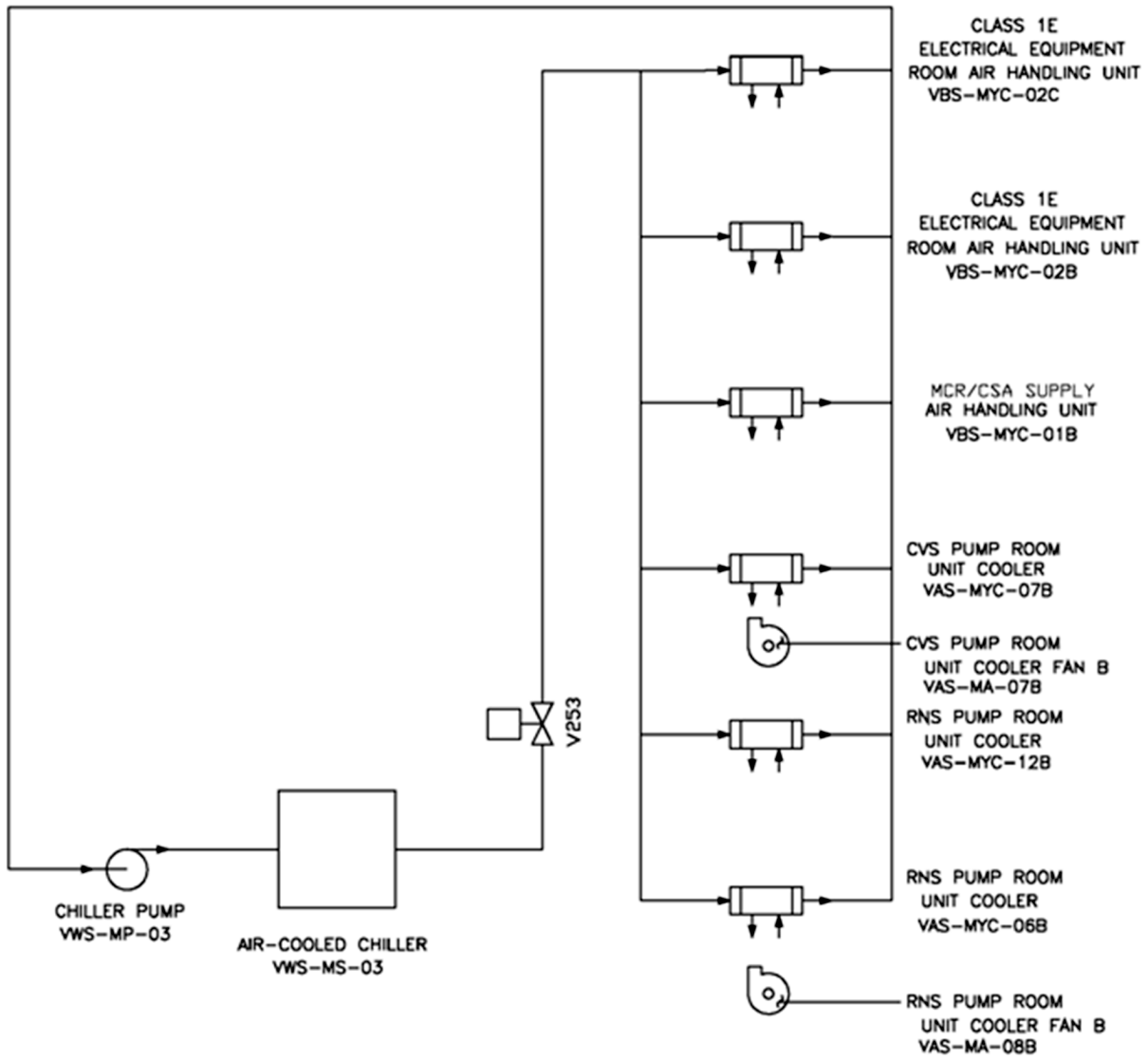

Figure 2.7.2-1 (Sheet 2 of 2)
Central Chilled Water System

2.7.3 Annex/Auxiliary Building Nonradioactive Ventilation System

Design Description

The annex/auxiliary buildings nonradioactive HVAC system (VXS) serves the nonradioactive personnel and equipment areas, electrical equipment rooms, clean corridors, the ancillary diesel generator room and demineralized water deoxygenating room in the annex building, and the main steam isolation valve compartments, reactor trip switchgear rooms, and piping and electrical penetration areas in the auxiliary building. The VXS consists of the following independent subsystems: the general area HVAC subsystem, the switchgear room HVAC subsystem, the equipment room HVAC subsystem, the MSIV compartment HVAC subsystem, the mechanical equipment areas HVAC subsystem and the valve/piping penetration room HVAC subsystem.

The VXS is as shown in Figure 2.7.3-1 and the component locations of the VXS are as shown in Table 2.7.3-3.

1. The functional arrangement of the VXS is as described in the Design Description of this Section 2.7.3.

2. The VXS provides the following nonsafety-related functions:

   a) The VXS provides cooling to the electrical switchgear, the battery charger, and the annex building nonradioactive air handling equipment rooms.

   b) The VXS provides ventilation cooling to the electrical switchgear, the battery charger, and the annex building nonradioactive air handling equipment rooms when the ZOS operates during a loss of offsite power coincident with loss of chilled water.

3. Controls exist in the main control room (MCR) to cause the components identified in Table 2.7.3-1 to perform the listed function.

4. Displays of the parameters identified in Table 2.7.3-1 can be retrieved in the MCR.

Inspections, Tests, Analyses, and Acceptance Criteria

Table 2.7.3-2 specifies the inspections, tests, analyses, and associated acceptance criteria for the VXS.

Table 2.7.3-1

Equipment Name	Tag No.	Display	Control Function
Switchgear Room Air Handling Units (AHU) A Fans	VXS-MA-05A VXS-MA-06A	Yes (Run Status)	Start
Switchgear Room AHU B Fans	VXS-MA-05B VXS-MA-06B	Yes (Run Status)	Start
Equipment Room AHU A Fans	VXS-MA-01A VXS-MA-02A	Yes (Run Status)	Start
Equipment Room AHU B Fans	VXS-MA-01B VXS-MA-02B	Yes (Run Status)	Start

Table 2.7.3-2
Inspections, Tests, Analyses, and Acceptance Criteria

Design Commitment	Inspections, Tests, Analyses	Acceptance Criteria
1. The functional arrangement of the VXS is as described in the Design Description of this Section 2.7.3.	Inspection of the as-built system will be performed.	The as-built VXS conforms with the functional arrangement described in the Design Description of this Section 2.7.3.
2.a) The VXS provides cooling to the electrical switchgear, the battery charger, and the annex building nonradioactive air handling equipment rooms when the ZOS operates and chilled water is available.	See item 3 in this table.	See item 3 in this table.
2.b) The VXS provides ventilation cooling to the electrical switchgear, the battery charger, and the annex building nonradioactive air handling equipment rooms when the ZOS operates during a loss of offsite power coincident with loss of chilled water.	See item 3 in this table.	See item 3 in this table.
3. Controls exist in the MCR to cause the components identified in Table 2.7.3-1 to perform the listed function.	Testing will be performed on the components in Table 2.7.3-1 using controls in the MCR.	Controls in the MCR operate to cause the components listed in Table 2.7.3-1 to perform the listed functions.
4. Displays of the parameters identified in Table 2.7.3-1 can be retrieved in the MCR.	Inspection will be performed for retrievability of the parameters in the MCR.	The displays identified in Table 2.7.3-1 can be retrieved in the MCR.

Table 2.7.3-3

Component Name	Tag No.	Component Location
Annex Building General Area AHU A	VXS-MS-01A	Annex Building
Annex Building General Area AHU B	VXS-MS-01B	Annex Building
Annex Building Equipment Room AHU A	VXS-MS-02A	Annex Building
Annex Building Equipment Room AHU B	VXS-MS-02B	Annex Building
MSIV Compartment A AHU-A	VXS-MS-04A	Auxiliary Building
MSIV Compartment B AHU-B	VXS-MS-04B	Auxiliary Building
MSIV Compartment B AHU-C	VXS-MS-04C	Auxiliary Building
MSIV Compartment A AHU-D	VXS-MS-04D	Auxiliary Building
Switchgear Room AHU A	VXS-MS-05A	Annex Building
Switchgear Room AHU B	VXS-MS-05B	Annex Building
Mechanical Equipment Area AHU Unit A	VXS-MS-07A	Annex Building
Mechanical Equipment Area AHU Unit B	VXS-MS-07B	Annex Building
Valve/Piping Penetration Room AHU A	VXS-MS-08A	Auxiliary Building
Valve/Piping Penetration Room AHU B	VXS-MS-08B	Auxiliary Building
Battery Room #1 Exhaust Fan	VXS-MA-09A	Annex Building
Battery Room #2 Exhaust Fan	VXS-MA-09B	Annex Building
Toilet Exhaust Fan	VXS-MA-13	Annex Building
Annex Building Nonradioactive Air Handling Equipment Room Unit Heater A	VXS-MY-W01A	Annex Building
Annex Building Nonradioactive Air Handling Equipment Room Unit Heater B	VXS-MY-W01B	Annex Building
Annex Building Nonradioactive Air Handling Equipment Room Unit Heater C	VXS-MY-W01C	Annex Building

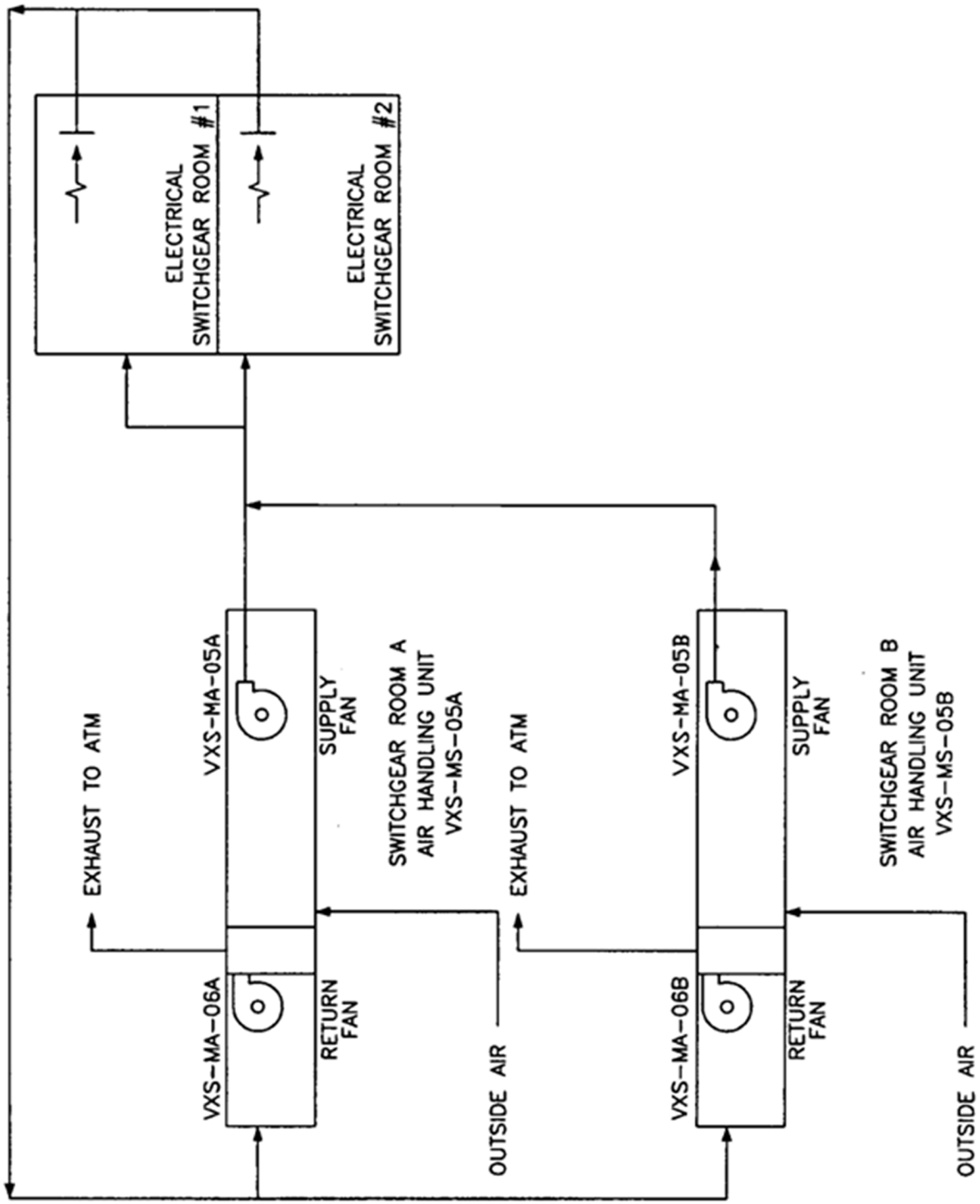

Figure 2.7.3-1 (Sheet 1 of 2)
Annex/Auxiliary Building Nonradioactive Ventilation System

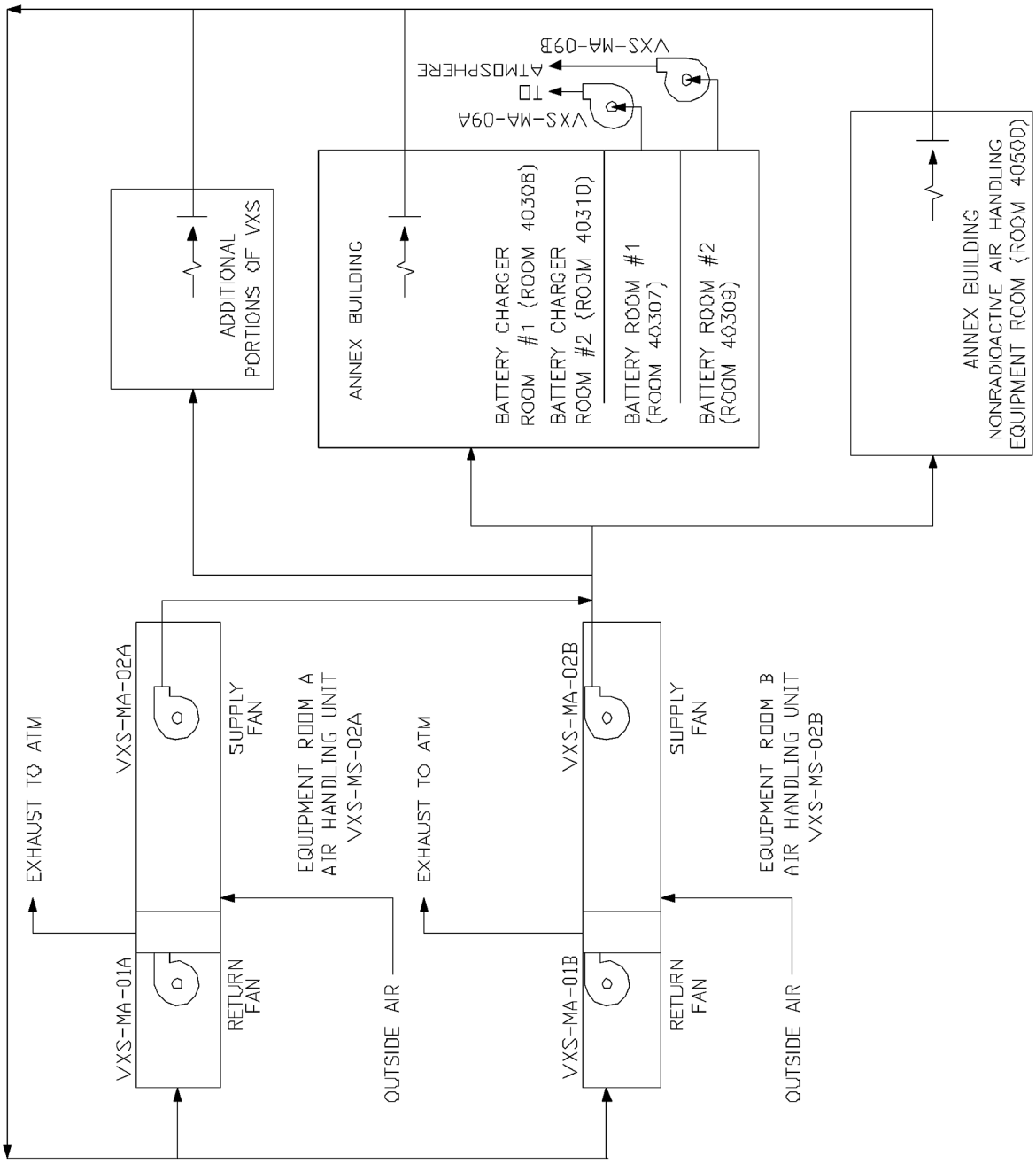

Figure 2.7.3-1 (Sheet 2 of 2)
Annex/Auxiliary Building Nonradioactive Ventilation System

2.7.4 Diesel Generator Building Ventilation System

Design Description

The diesel generator building ventilation system (VZS) provides ventilation cooling of the diesel generator building for the onsite standby power system. The VZS also provides heating and ventilation within the diesel oil transfer module enclosure. The VZS consists of the following subsystems: the normal diesel building heating and ventilation subsystem, the standby diesel building exhaust ventilation subsystem, the fuel oil day tank vault exhaust subsystem and the diesel oil transfer module enclosures ventilation and heating subsystem.

The VZS is as shown in Figure 2.7.4-1 and the component locations of the VZS are as shown in Table 2.7.4-3.

1. The functional arrangement of the VZS is as described in the Design Description of this Section 2.7.4.

2. The VZS provides the following nonsafety-related functions:

   a) The VZS provides ventilation cooling to the diesel generator rooms when the diesel generators are operating.

   b) The VZS provides ventilation cooling to the electrical equipment service modules when the diesel generators are operating.

   c) The VZS provides normal heating and ventilation to the diesel oil transfer module enclosure.

3. Controls exist in the main control room (MCR) to cause the components identified in Table 2.7.4-1 to perform the listed functions.

4. Displays of the parameters identified in Table 2.7.4-1 can be retrieved in the MCR.

Inspections, Tests, Analyses, and Acceptance Criteria

Table 2.7.4-2 specifies the inspections, tests, analyses, and associated acceptance criteria for the VZS.

Table 2.7.4-1

Equipment Name	Tag No.	Display	Control Function
Diesel Generator Room A Standby Exhaust Fans	VZS-MY-V01A VZS-MY-V02A	Yes (Run Status)	Start
Diesel Generator Room B Standby Exhaust Fans	VZS-MY-V01B VZS-MY-V02B	Yes (Run Status)	Start
Service Module A Air Handling Units (AHU) Supply Fan	VZS-MA-01A	Yes (Run Status)	Start
Service Module B AHU Supply Fan	VZS-MA-01B	Yes (Run Status)	Start
Diesel Oil Transfer Module Enclosure A Exhaust Fan	VZS-MY-V03A	Yes (Run Status)	Start
Diesel Oil Transfer Module Enclosure A Electric Unit Heater	VZS-MY-U03A	Yes (Run Status)	Energize
Diesel Oil Transfer Module Enclosure B Exhaust Fan	VZS-MY-V03B	Yes (Run Status)	Start
Diesel Oil Transfer Module Enclosure B Electric Unit Heater	VZS-MY-U03B	Yes (Run Status)	Energize

Table 2.7.4-2
Inspections, Tests, Analyses, and Acceptance Criteria

Design Commitment	Inspections, Tests, Analyses	Acceptance Criteria
1. The functional arrangement of the VZS is as described in the Design Description of this Section 2.7.4.	Inspection of the as-built system will be performed.	The as-built VZS conforms with the functional arrangement described in the Design Description of this Section 2.7.4.
2.a) The VZS provides ventilation cooling to the diesel generator rooms when the diesel generators are operating.	See item 3 in this table.	See item 3 in this table.
2.b) The VZS provides ventilation cooling to the electrical equipment service modules when the diesel generators are operating.	See item 3 in this table.	See item 3 in this table.
2.c) The VZS provides normal heating and ventilation to the diesel oil transfer module enclosure.	See item 3 in this table.	See item 3 in this table.
3. Controls exist in the MCR to cause the components identified in Table 2.7.4-1 to perform the listed function.	Testing will be performed on the components in Table 2.7.4-1 using controls in the MCR.	Controls in the MCR operate to cause the components listed in Table 2.7.4-1 to perform the listed functions.
4. Displays of the parameters identified in Table 2.7.4-1 can be retrieved in the MCR.	Inspection will be performed for retrievability of the parameters in the MCR.	The displays identified in Table 2.7.4-1 can be retrieved in the MCR.

Table 2.7.4-3

Component Name	Tag No.	Component Location
Service Module AHU A	VZS-MS-01A	Diesel-Generator Building
Service Module AHU B	VZS-MS-01B	Diesel-Generator Building
Diesel Oil Transfer Module Enclosure A Unit Heater	VZS-MY-U03A	Yard
Diesel Oil Transfer Module Enclosure B Unit Heater	VZS-MY-U03B	Yard
D/G Building Standby Exhaust Fan 1A	VZS-MY-V01A	Diesel-Generator Building
D/G Building Standby Exhaust Fan 1B	VZS-MY-V01B	Diesel-Generator Building
D/G Building Standby Exhaust Fan 2A	VZS-MY-V02A	Diesel-Generator Building
D/G Building Standby Exhaust Fan 2B	VZS-MY-V02B	Diesel-Generator Building
Diesel Oil Transfer Module Enclosure A Exhaust Fan	VZS-MY-V03A	Yard
Diesel Oil Transfer Module Enclosure B Exhaust Fan	VZS-MY-V03B	Yard
Fuel Oil Day Tank Vault Exhaust Fan	VZS-MA-02A	Diesel-Generator Building
Fuel Oil Day Tank Vault Exhaust Fan	VZS-MA-02B	Diesel-Generator Building

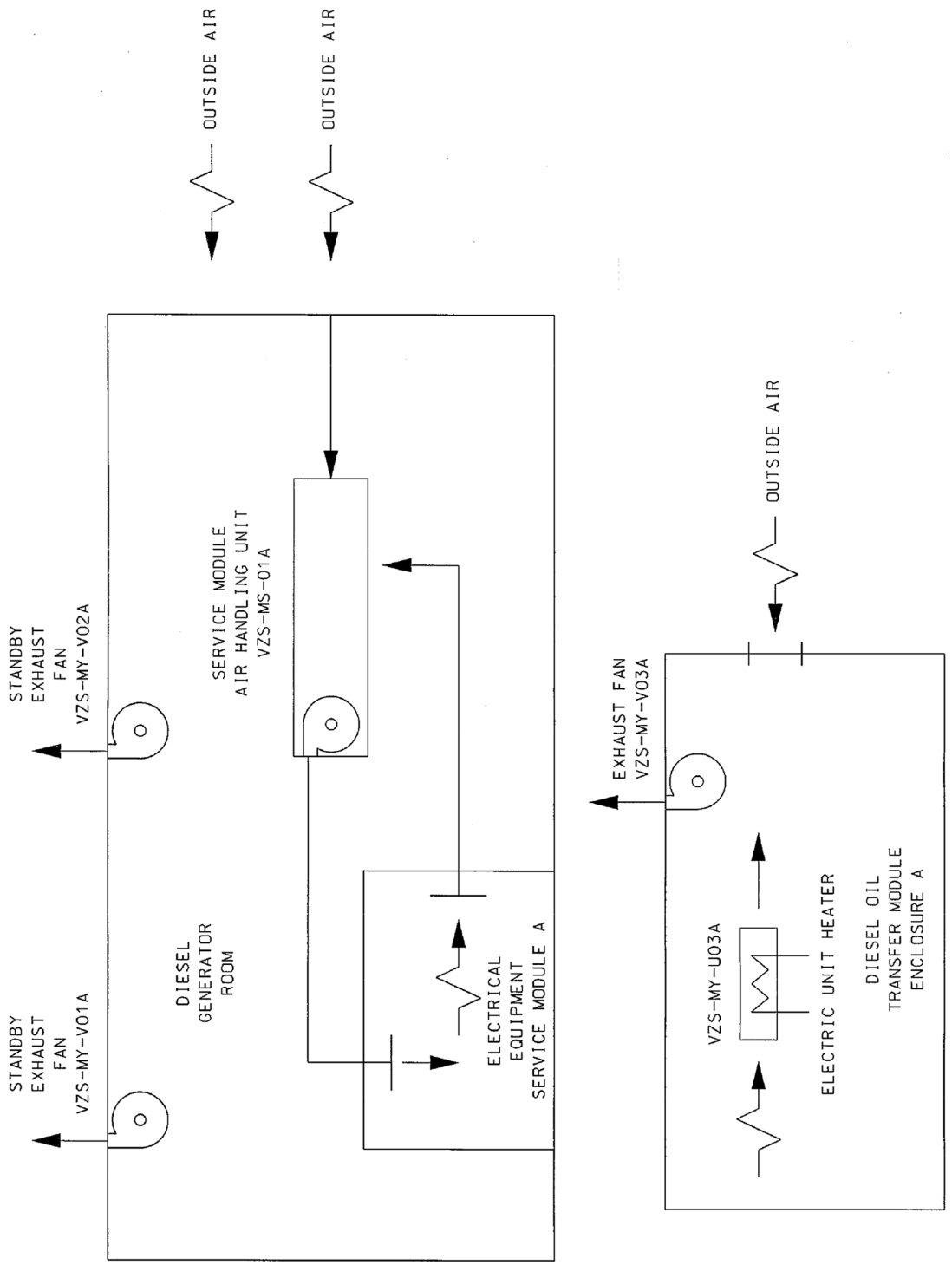

Figure 2.7.4-1 (Sheet 1 of 2)
Diesel Generator Building Ventilation System

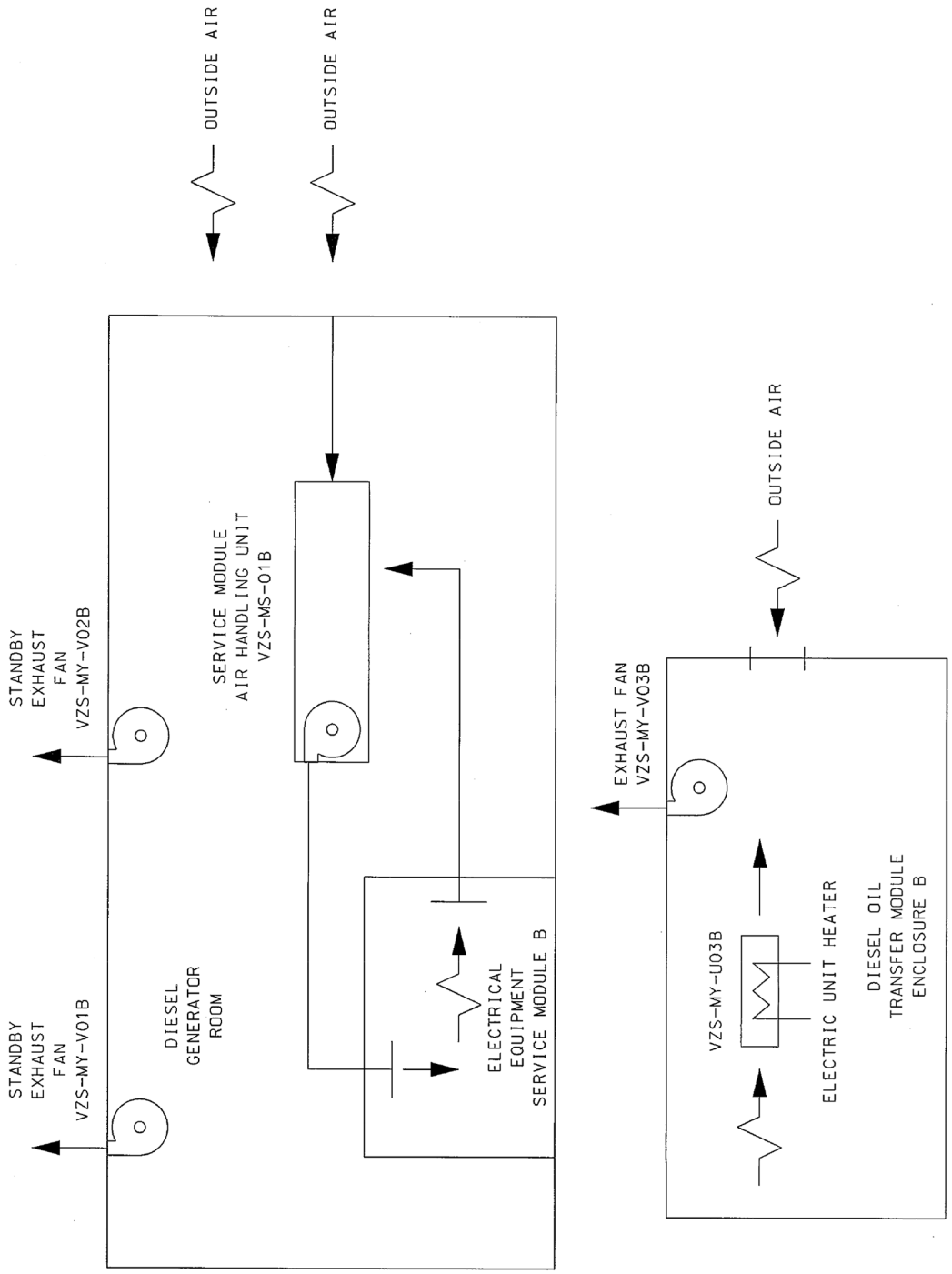

Figure 2.7.4-1 (Sheet 2 of 2)
Diesel Generator Building Ventilation System

2.7.5 Radiologically Controlled Area Ventilation System

Design Description

The radiologically controlled area ventilation system (VAS) serves the fuel handling area of the auxiliary building, and the radiologically controlled portions of the auxiliary and annex buildings, except for the health physics and hot machine shop areas, which are provided with a separate ventilation system (VHS). The VAS consists of two subsystems: the auxiliary/annex building ventilation subsystem and the fuel handling area ventilation subsystem. The subsystems provide ventilation to maintain occupied areas, and access and equipment areas within their design temperature range. They provide outside air for plant personnel and prevent the unmonitored release of airborne radioactivity to the atmosphere or adjacent plant areas. The VAS automatically isolates selected building areas by closing the supply and exhaust duct isolation dampers and starts the containment air filtration system (VFS) when high airborne radioactivity in the exhaust air duct or high ambient pressure differential is detected.

The component locations of the VAS are as shown in Table 2.7.5-3.

1. The functional arrangement of the VAS is as described in the Design Description of this Section 2.7.5.

2. The VAS maintains each building area at a slightly negative pressure relative to the atmosphere or adjacent clean plant areas.

3. Displays of the parameters identified in Table 2.7.5-1 can be retrieved in the main control room (MCR).

Inspections, Tests, Analyses, and Acceptance Criteria

Table 2.7.5-2 specifies the inspections, tests, analyses, and associated acceptance criteria for the VAS.

Table 2.7.5-1

Equipment	Tag No.	Display	Control Function
Annex Building Pressure Differential Indicator	VAS-032	Yes	-
Auxiliary Building Pressure Differential Indicator	VAS-033	Yes	-
Fuel Handling Area Pressure Differential Indicator	VAS-030	Yes	-

Note: Dash (-) indicates not applicable.

Table 2.7.5-2
Inspections, Tests, Analyses, and Acceptance Criteria

Design Commitment	Inspections, Tests, Analyses	Acceptance Criteria
1. The functional arrangement of the VAS is as described in the Design Description of this Section 2.7.5.	Inspection of the as-built system will be performed.	The as-built VAS conforms with the functional arrangement described in the Design Description of this Section 2.7.5.
2. The VAS maintains each building area at a slightly negative pressure relative to the atmosphere or adjacent clean plant areas.	i) Testing will be performed to confirm that the VAS maintains each building at a slightly negative pressure when operating all VAS supply AHUs and all VAS exhaust fans. ii) Testing will be performed to confirm the ventilation flow rate through the auxiliary building fuel handling area when operating all VAS supply AHUs and all VAS exhaust fans. iii) Testing will be performed to confirm the auxiliary building radiologically controlled area ventilation flow rate when operating all VAS supply AHUs and all VAS exhaust fans.	i) The time average pressure differential in the served areas of the annex, fuel handling and radiologically controlled auxiliary buildings as measured by each of the instruments identified in Table 2.7.5-1 is negative. ii) A report exists and concludes that the calculated exhaust flow rate based on the measured flow rates is greater than or equal to 15,300 cfm. iii) A report exists and concludes that the calculated exhaust flow rate based on the measured flow rates is greater than or equal to 22,500 cfm.
3. Displays of the parameters identified in Table 2.7.5-1 can be retrieved in the MCR.	Inspection will be performed for retrievability of the parameters in the MCR.	The displays identified in Table 2.7.5-1 can be retrieved in the MCR.

Table 2.7.5-3

Component Name	Tag No.	Component Location
Auxiliary/Annex Building Supply AHU A	VAS-MS-01A	Annex Building
Auxiliary/Annex Building Supply AHU B	VAS-MS-01B	Annex Building
Fuel Handling Area Supply AHU A	VAS-MS-02A	Annex Building
Fuel Handling Area Supply AHU B	VAS-MS-02B	Annex Building
CVS Pump Room Unit Cooler A	VAS-MS-05A	Auxiliary Building
CVS Pump Room Unit Cooler B	VAS-MS-05B	Auxiliary Building
RNS Pump Room Unit Cooler A	VAS-MS-06A	Auxiliary Building
RNS Pump Room Unit Cooler B	VAS-MS-06B	Auxiliary Building
Auxiliary/Annex Building Exhaust Fan A	VAS-MA-02A	Auxiliary Building
Auxiliary/Annex Building Exhaust Fan B	VAS-MA-02B	Auxiliary Building
Fuel Handling Area Exhaust Fan A	VAS-MA-06A	Auxiliary Building
Fuel Handling Area Exhaust Fan B	VAS-MA-06B	Auxiliary Building

2.7.6 Containment Air Filtration System

Design Description

The containment air filtration system (VFS) provides intermittent flow of outdoor air to purge and filter the containment atmosphere of airborne radioactivity during normal plant operation, and continuous flow during hot or cold plant shutdown conditions to reduce airborne radioactivity levels for personnel access. The VFS can also provide filtered exhaust for the radiologically controlled area ventilation system (VAS) during abnormal conditions.

The VFS is as shown in Figure 2.7.6-1 and the component locations of the VFS are as shown in Table 2.7.6-3.

1. The functional arrangement of the VFS is as described in the Design Description of this Section 2.7.6.

2. The VFS provides the safety-related functions of preserving containment integrity by isolation of the VFS lines penetrating containment and providing vacuum relief for the containment vessel.

3. The VFS provides the intermittent flow of outdoor air to purge the containment atmosphere during normal plant operation, and continuous flow during hot or cold plant shutdown conditions.

4. Controls exist in the main control room (MCR) to cause the components identified in Table 2.7.6-1 to perform the listed function.

5. Displays of the parameters in Table 2.7.6-1 can be retrieved in the MCR.

Inspections, Tests, Analyses, and Acceptance Criteria

Table 2.7.6-2 specifies the inspections, tests, analyses, and associated criteria for the VFS.

Table 2.7.6-1

Equipment	Tag No.	Display	Control Function
Containment Air Handling Units (AHU) Supply Fan A	VFS-MA-01A	Yes (Run Status)	Start
Containment AHU Supply Fan B	VFS-MA-01B	Yes (Run Status)	Start
Containment AHU Supply Fan A Flow Sensor	VFS-012A	Yes	-
Containment AHU Supply Fan B Flow Sensor	VFS-012B	Yes	-
Containment Exhaust Fan A	VFS-MA-02A	Yes (Run Status)	Start
Containment Exhaust Fan B	VFS-MA-02B	Yes (Run Status)	Start
Containment Exhaust Fan A Flow Sensor	VFS-011A	Yes	-
Containment Exhaust Fan B Flow Sensor	VFS-011B	Yes	-

Table 2.7.6-2

Design Commitment	Inspections, Tests, Analyses	Acceptance Criteria
1. The functional arrangement of the VFS is as described in the Design Description of this Section 2.7.6.	Inspection of the as-built system will be performed.	The as-built VFS conforms with the functional arrangement described in the Design Description of this Section 2.7.6.
2. The VFS provides the safety-related functions of preserving containment integrity by isolation of the VFS lines penetrating containment and providing vacuum relief for the containment vessel.	i) See Tier 1 Material, Table 2.2.1-3, items 1 and 7. ii) Testing will be performed to demonstrate that remotely operated containment vacuum relief isolation valves open within the required response time.	i) See Tier 1 Material, Table 2.2.1-3, items 1 and 7. ii) The containment vacuum relief isolation valves (VFS-PL-V800A and VFS-PL-V800B) open within 30 seconds.
3. The VFS provides the intermittent flow of outdoor air to purge the containment atmosphere during normal plant operation, and continuous flow during hot or cold plant shutdown conditions.	i) Testing will be performed to confirm that containment supply AHU fan A when operated with containment exhaust fan A provides a flow of outdoor air. ii) Testing will be performed to confirm that containment supply AHU fan B when operated with containment exhaust fan B provides a flow of outdoor air. iii) Inspection will be conducted of the containment purge discharge line (VFS-L204) penetrating the containment.	i) The flow rate measured at each fan is greater than or equal to 3,600 scfm. ii) The flow rate measured at each fan is greater than or equal to 3,600 scfm. iii) The <u>nominal</u> line size is ≥ 36 in.
4. Controls exist in the MCR to cause the components identified in Table 2.7.6-1 to perform the listed function.	Testing will be performed on the components in Table 2.7.6-1 using controls in the MCR.	Controls in the MCR operate to cause the components listed in Table 2.7.6-1 to perform the listed functions.
5. Displays of the parameters identified in Table 2.7.6-1 can be retrieved in the MCR.	Inspection will be performed for retrievability of the parameters in the MCR.	The displays identified in Table 2.7.6-1 can be retrieved in the MCR.

Table 2.7.6-3

Component Name	Tag No.	Component Location
Containment Air Filtration Supply AHU A	VFS-MS-01A	Annex Building
Containment Air Filtration Supply AHU B	VFS-MS-01B	Annex Building
Containment Air Filtration Exhaust Unit A	VFS-MS-02A	Annex Building
Containment Air Filtration Exhaust Unit B	VFS-MS-02B	Annex Building

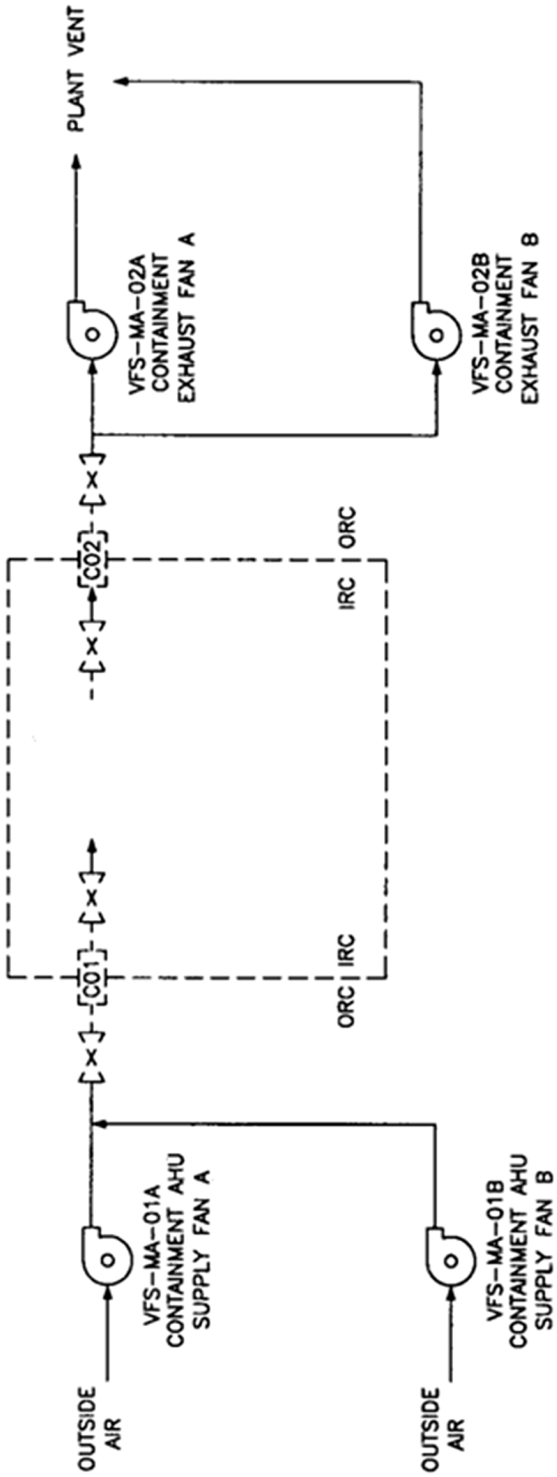

Figure 2.7.6-1
Containment Air Filtration System

2.7.7 Containment Recirculation Cooling System

Design Description

The containment recirculation cooling system (VCS) controls the containment air temperature and humidity during normal operation, refueling and shutdown.

The locations of the VCS are as shown in Table 2.7.7-3.

1. The functional arrangement of the VCS is as described in the Design Description of this Section 2.7.7.

2. Displays of the parameters identified in Table 2.7.7-1 can be retrieved in the main control room (MCR).

Inspections, Tests, Analyses, and Acceptance Criteria

Table 2.7.7-2 specifies the inspections, tests, analyses, and associated acceptance criteria for the VCS.

Table 2.7.7-1

Equipment Name	Tag No.	Display
Containment Temperature Channel	VCS-061	Yes
Containment Fan Cooler Fan	VCS-MA-01A VCS-MA-01C VCS-MA-01B VCS-MA-01D	Yes (Run Status) Yes (Run Status) Yes (Run Status) Yes (Run Status)

Note: Dash (-) indicates not applicable.

Table 2.7.7-2
Inspections, Tests, Analyses, and Acceptance Criteria

Design Commitment	Inspections, Tests, Analyses	Acceptance Criteria
1. The functional arrangement of the VCS is as described in the Design Description of this Section 2.7.7.	Inspection of the as-built system will be performed.	The as-built VCS conforms with the functional arrangement described in the Design Description of this Section 2.7.7.
2. Displays of the parameters identified in Table 2.7.7-1 can be retrieved in the MCR.	Inspection will be performed for retrievability of the parameters in the MCR.	The displays identified in Table 2.7.7-1 are retrieved in the MCR.

Table 2.7.7-3

Component Name	Tag No.	Component Location
Reactor Containment Recirculation Fan Coil Unit Assembly A	VCS-MS-01A	Containment
Reactor Containment Recirculation Fan Coil Unit Assembly B	VCS-MS-01B	Containment

2.7.8 Radwaste Building HVAC System

The radwaste building HVAC system (VRS) serves the radwaste building and provides radiation monitoring of exhaust prior to release to the environment.

2.7.9 Turbine Island Building Ventilation System

No entry for this system.

2.7.10 Health Physics and Hot Machine Shop HVAC System

The health physics and hot machine shop system (VHS) serves the health physics and hot machine shop area of the annex building and provides radiation monitoring of exhaust prior to release to the environment.

2.7.11 Hot Water Heating System

No entry for this system.

3.1 Emergency Response Facilities

Design Description

The technical support center (TSC) is a facility from which management and technical support is provided to main control room (MCR) personnel during emergency conditions. The operations support center (OSC) provides an assembly area where operations support personnel report in an emergency. The control support area (CSA) is an area nearby the main control room from which support can be provided to the main control room.

1. The TSC has floor space of at least 75 ft^2 per person for a minimum of 25 persons.

2. The TSC has voice communication equipment for communication with the MCR, emergency operations facility, OSC, and the U.S. Nuclear Regulatory Commission (NRC).

3. The plant parameters listed in Table 2.5.4-1, minimum inventory table, in subsection 2.5.4, Data Display and Processing System (DDS), with a "Yes" in the "Display" column, can be retrieved in the TSC.

4. The OSC has voice communication equipment for communication with the MCR and TSC.

5. The TSC and OSC are in different locations.

6. The CSA provides a habitable workspace environment.

Inspections, Tests, Analyses, and Acceptance Criteria

Table 3.1-1 specifies the inspections, tests, analyses, and associated acceptance criteria for the emergency response facilities.

Table 3.1-1
Inspections, Tests, Analyses, and Acceptance Criteria

Design Commitment	Inspections, Tests, Analyses	Acceptance Criteria
1. The TSC has floor space of at least 75 ft^2 per person for a minimum of 25 persons.	An inspection will be performed of the TSC floor space.	The TSC has at least 1875 ft^2 of floor space.
2. The TSC has voice communication equipment for communication with the MCR, emergency operations facility, OSC, and the NRC.	An inspection and test will be performed of the TSC voice communication equipment.	Communications equipment is installed, and voice transmission and reception are accomplished.
3. The plant parameters listed in Table 2.5.4-1, minimum inventory table, in subsection 2.5.4, DDS, with a "Yes" in the "Display" column, can be retrieved in the TSC.	An inspection will be performed for retrievability of the plant parameters in the TSC.	The plant parameters listed in Table 2.5.4-1, minimum inventory table, in subsection 2.5.4, DDS, with a "Yes" in the "Display" column, can be retrieved in the TSC.
4. The OSC has voice communication equipment for communication with the MCR and TSC.	Inspection will be performed of the OSC voice communication equipment.	Communications equipment is installed, and voice transmission and reception are accomplished.
5. The TSC and OSC are in different locations.	An inspection will be performed of the location of the TSC and OSC.	The TSC and OSC are in different locations.
6. The CSA provides a habitable workspace environment.	See Tier 1 Material, Table 2.7.1-4, items 1, 8a), 8c), 12, and 13, Nuclear Island Nonradioactive Ventilation System.	See Tier 1 Material, Table 2.7.1-4, items 1, 8a), 8c), 12, and 13, Nuclear Island Nonradioactive Ventilation System.

3.2 Human Factors Engineering

Design Description

The AP1000 human-system interface (HSI) will be developed and implemented based upon a human factors engineering (HFE) program. Figure 3.2-1 illustrates the HFE program elements. The HSI scope includes the design of the operation and control centers system (OCS) and each of the HSI resources. For the purposes of the HFE program, the OCS includes the main control room (MCR), the remote shutdown workstation (RSW), the local control stations, and the associated workstations for each of these centers. The HSI resources include the wall panel information system, alarm system, plant information system (nonsafety-related displays), qualified data processing system (safety-related displays), and soft and dedicated controls. Minimum inventories of controls, displays, and visual alerts are specified as part of the HSI for the MCR and the RSW.

The MCR provides a facility and resources for the safe control and operation of the plant. The MCR includes a minimum inventory of displays, visual alerts and fixed-position controls. Refer to item 8.a and Table 2.5.2-5 of subsection 2.5.2 for this minimum inventory.

The remote shutdown room (RSR) provides a facility and resources to establish and maintain safe shutdown conditions for the plant from a location outside of the MCR. The RSW includes a minimum inventory of displays, controls, and visual alerts. Refer to item 2 and Table 2.5.4-1 of subsection 2.5.4 for this minimum inventory. As stated in item 8.b of subsection 2.5.2, the protection and safety monitoring system (PMS) provides for the transfer of control capability from the MCR to the RSW.

The mission of local control stations is to provide the resources, outside of the MCR, for operations personnel to perform monitoring and control activities.

Implementation of the HFE program includes activity 1 below. The MCR includes design features specified by items 2 through 4 below. The RSW includes the design features specified by items 5 through 8 below. Local control stations include the design feature of item 9.

1. The HFE program verification and validation implementation plans are developed in accordance with the programmatic level description of the AP1000 human factors verification and validation plan. The implementation plans establish the methods for conducting evaluations of the integrated HSI design. The development of the HFE verification and validation plans are complete. The following documents were developed:

    a) HSI task support verification – APP-OCS-GEH-220, “AP1000 Human Factors Engineering Task Support Verification Plan,” Westinghouse Electric Company LLC

    b) HFE design verification – APP-OCS-GEH-120, “AP1000 Human Factors Engineering Design Verification Plan,” Westinghouse Electric Company LLC

    c) Integrated system validation – APP-OCS-GEH-320, “AP1000 Human Factors Engineering Integrated System Validation Plan,” Westinghouse Electric Company LLC

    d) Issue resolution verification – APP-OCS-GEH-420, “AP1000 Human Factors Engineering Discrepancy Resolution Process,” Westinghouse Electric Company LLC

e) Plant HFE/HSI (as designed at the time of plant startup) verification – APP-OCS-GEH-520, "AP1000 Plant Startup Human Factors Engineering Verification Plan," Westinghouse Electric Company LLC

2. The MCR includes reactor operator workstations, supervisor workstation(s), safety-related displays, and safety-related controls.

3. The MCR provides a suitable workspace environment for use by MCR operators.

4. The HSI resources available to the MCR operators include the alarm system, plant information system (nonsafety-related displays), wall panel information system, nonsafety-related controls (soft and dedicated), and computerized procedure system.

5. The RSW includes reactor operator workstation(s) from which licensed operators perform remote shutdown operations.

6. The RSR provides a suitable workspace environment, separate from the MCR, for use by the RSW operators.

7. The HSI resources available at the RSW include the alarm system displays, the plant information system, and the controls.

8. The RSW and the available HSI permit execution of tasks by licensed operators to establish and maintain safe shutdown.

9. The capability to access displays and controls is provided (controls as assigned by the MCR operators) for local control and monitoring from selected locations throughout the plant.

Inspections, Tests, Analyses, and Acceptance Criteria

Table 3.2-1 specifies the inspections, tests, analyses, and associated acceptance criteria for the HFE program, MCR, RSW, and local control stations.

Table 3.2-1
Inspections, Tests, Analyses, and Acceptance Criteria

Design Commitment	Inspections, Tests, Analyses	Acceptance Criteria
1. The HFE verification and validation program is performed in accordance with the HFE verification and validation implementation plan and includes the following activities:		
a) HSI Task support verification	a) An evaluation of the implementation of the HSI task support verification will be performed.	a) A report exists and concludes that: Task support verification was conducted in conformance with the implementation plan and includes verification that the information and controls provided by the HSI match the display and control requirements generated by the function-based task analyses and the operational sequence analyses.
b) HFE design verification	b) An evaluation of the implementation of the HFE design verification will be performed.	b) A report exists and concludes that: HFE design verification was conducted in conformance with the implementation plan and includes verification that the HSI design is consistent with the AP1000 specific design guidelines (compiled as specified in the third acceptance criteria of design commitment 3) developed for each HSI resource.
c) Integrated system validation	c) (i) An evaluation of the implementation of the integrated system validation will be performed.	c) (i) A report exists and concludes that: The test scenarios listed in the implementation plan for integrated system validation were executed in conformance with the plan and noted human deficiencies were addressed.

Table 3.2-1 (cont.)
Inspections, Tests, Analyses, and Acceptance Criteria

Design Commitment	Inspections, Tests, Analyses	Acceptance Criteria
	c) (ii) Tests and analyses of the following plant evolutions and transients, using a facility that physically represents the MCR configuration and dynamically represents the MCR HSI and the operating characteristics and responses of the AP1000 design, will be performed: - Normal plant heatup and startup to 100% power - Normal plant shutdown and cooldown to cold shutdown - Transients: reactor trip and turbine trip - Accidents: - Small-break LOCA - Large-break LOCA - Steam line break - Feedwater line break - Steam generator tube rupture	c) (ii) A report exists and concludes that: The test and analysis results demonstrate that the MCR operators can perform the following: - Heat up and start up the plant to 100% power - Shut down and cool down the plant to cold shutdown - Bring the plant to safe shutdown following the specified transients - Bring the plant to a safe, stable state following the specified accidents
d) Issue resolution verification	d) An evaluation of the implementation of the HFE design issue resolution verification will be performed.	d) A report exists and concludes that: HFE design issue resolution verification was conducted in conformance with the implementation plan and includes verification that human factors issues documented in the design issues tracking system have been addressed in the final design.
e) Plant HFE/HSI (as designed at the time of plant startup) verification	e) An evaluation of the implementation of the plant HFE/HSI (as designed at the time of plant startup) verification will be performed.	e) A report exists and concludes that: The plant HFE/HSI, as designed at the time of plant startup, is consistent with the HFE/HSI verified in 1.a) through 1.d).

Table 3.2-1 (cont.)
Inspections, Tests, Analyses, and Acceptance Criteria

Design Commitment	Inspections, Tests, Analyses	Acceptance Criteria
2. The MCR includes reactor operator workstations, supervisor workstation(s), safety-related displays, and safety-related controls.	An inspection of the MCR workstations and control panels will be performed.	The MCR includes reactor operator workstations, supervisor workstation(s), safety-related displays, and safety-related controls.
3. The MCR provides a suitable workspace environment for use by the MCR operators.	i) See Tier 1 Material, subsection 2.7.1, Nuclear Island Nonradioactive Ventilation System. ii) See Tier 1 Material, subsection 2.2.5, MCR Emergency Habitability System. iii) See Tier 1 Material, subsection 2.6.3, Class 1E dc and UPS System. iv) See Tier 1 Material, subsection 2.6.5, Lighting System. v) See Tier 1 Material, subsection 2.3.19, Communication System.	i) See Tier 1 Material, subsection 2.7.1, Nuclear Island Nonradioactive Ventilation System. ii) See Tier 1 Material, subsection 2.2.5, MCR Emergency Habitability System. iii) See Tier 1 Material, subsection 2.6.3, Class 1E dc and UPS system. iv) See Tier 1 Material, subsection 2.6.5, Lighting System. v) See Tier 1 Material, subsection 2.3.19, Communication System.
4. The HSI resources available to the MCR operators include the alarm system, plant information system (nonsafety-related displays), wall panel information system, nonsafety-related controls (soft and dedicated), and computerized procedure system.	An inspection of the HSI resources available in the MCR for the MCR operators will be performed.	The HSI (at the time of plant startup) includes an alarm system, plant information system (nonsafety-related displays), wall panel information system, nonsafety-related controls (soft and dedicated), and computerized procedure system.
5. The RSW includes reactor operator workstation(s) from which licensed operators perform remote shutdown operations.	An inspection of the RSW will be performed.	The RSW includes reactor operator workstation(s).

Table 3.2-1 (cont.)
Inspections, Tests, Analyses, and Acceptance Criteria

Design Commitment	Inspections, Tests, Analyses	Acceptance Criteria
6. The RSR provides a suitable workspace environment, separate from the MCR, for use by the RSW operators.	i) See Tier 1 Material, subsection 2.7.1, Nuclear Island Nonradioactive Ventilation System. ii) See Tier 1 Material, subsection 2.6.5, Lighting System. iii) See Tier 1 Material, subsection 2.3.19, Communication System.	i) See Tier 1 Material, subsection 2.7.1, Nuclear Island Nonradioactive Ventilation System. ii) See Tier 1 Material, subsection 2.6.5, Lighting System. iii) See Tier 1 Material, subsection 2.3.19, Communication System.
7. The HSI resources available at the RSW include the alarm system displays, the plant information system, and the controls.	An inspection of the HSI resources available at the RSW will be performed.	The as-built HSI at the RSW includes the alarm system displays, the plant information system, and the controls.
8. The RSW and the available HSI permit execution of tasks by licensed operators to establish and maintain safe shutdown.	Test and analysis, using a workstation that physically represents the RSW and dynamically represents the RSW HSI and the operating characteristics and responses of the AP1000, will be performed.	A report exists and concludes that the test and analysis results demonstrate that licensed operators can achieve and maintain safe shutdown conditions from the RSW.
9. The capability to access displays and controls is provided (controls as assigned by the MCR operators) for local control and monitoring from selected locations throughout the plant.	An inspection of the local control and monitoring capability is provided.	The capability for local control and monitoring from selected locations throughout the plant exists.

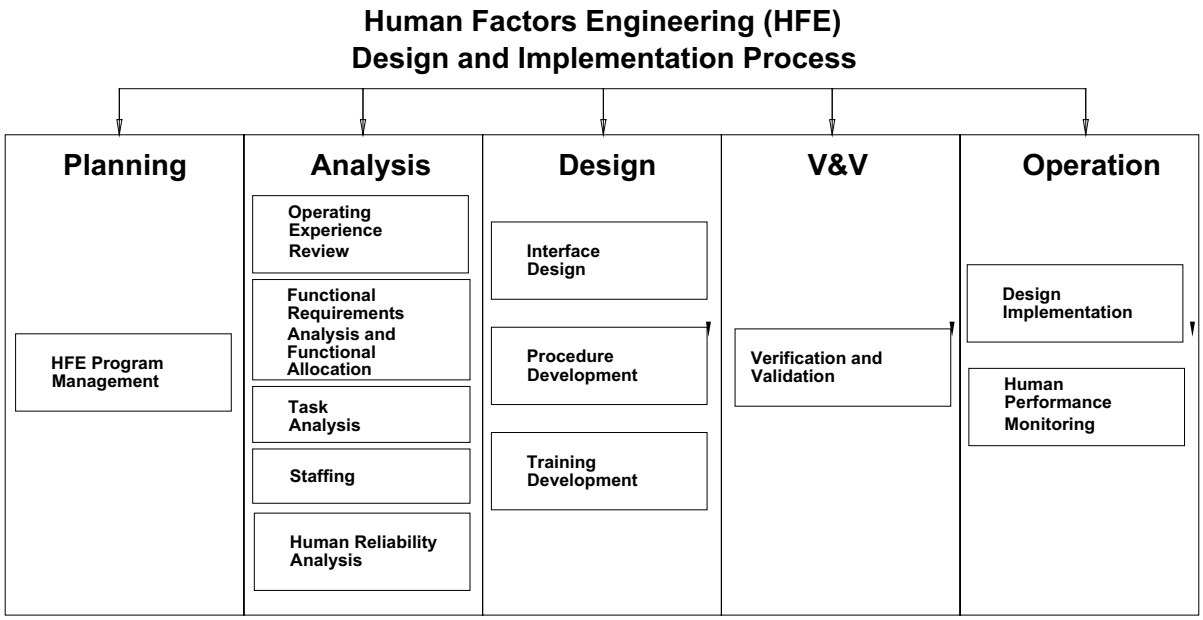

Figure 3.2-1
Human Factors Engineering (HFE)
Design and Implementation Process

3.3 Buildings

Design Description

The nuclear island structures include the containment (the steel containment vessel and the containment internal structure) and the shield and auxiliary buildings. The containment, shield and auxiliary buildings are structurally integrated on a common basemat which is embedded below the finished plant grade level. The containment vessel is a cylindrical welded steel vessel with elliptical upper and lower heads, supported by embedding a lower segment between the containment internal structures concrete and the basemat concrete. The containment internal structure is reinforced concrete with structural modules used for some walls and floors. The shield building cylinder is a composite steel and concrete (SC) structure except for the portion surrounded by the auxiliary building, which is reinforced concrete (RC). The shield building, in conjunction with the internal structures of the containment building, provides shielding for the reactor coolant system and the other radioactive systems and components housed in the containment. The shield building roof is a reinforced concrete structure containing an integral, steel lined passive containment cooling water storage tank. The auxiliary building is reinforced concrete and houses the safety-related mechanical and electrical equipment located outside the containment and shield buildings.

The portion of the annex building adjacent to the nuclear island is a structural steel and reinforced concrete seismic Category II structure and houses the control support area, non-1E electrical equipment, and hot machine shop.

The radwaste building is a steel framed structure and houses the low level waste processing and storage.

The turbine building is a non-safety related structure that houses the main turbine generator and the power conversion cycle equipment and auxiliaries. There is no safety-related equipment in the turbine building. The turbine building is located on a separate foundation. The turbine building structure is adjacent to the nuclear island structures consisting of the auxiliary building to the south and the annex building to the south and east. The turbine building consists of two separate superstructures, the first bay and the main area, both supported on a common reinforced concrete basemat. The first bay, next to the auxiliary building, consists of a combination of reinforced concrete walls and steel framing with reinforced concrete and steel grated floors. It is classified as a seismic Category II structure due to its immediate proximity to the auxiliary building. The main area of the turbine building, immediately to the north of the first bay, is a steel framed building with reinforced concrete and steel grated floors. It is classified as a non-seismic structure. The non-seismic portion of the turbine building is designed with eccentrically braced framing (EBF).

The diesel generator building is a non-safety related structure that houses the two standby diesel engine powered generators and the power conversion cycle equipment and auxiliaries. There is no safety-related equipment in the diesel generator building. The diesel generator building is located on a separate foundation at a distance from the nuclear island structures.

The plant gas system (PGS) provides hydrogen, carbon dioxide, and nitrogen gases to the plant systems as required. The component locations of the PGS are located in the yard areas.

1. The physical arrangement of the nuclear island structures, the annex building, and the turbine building is as described in the Design Description of this Section 3.3, and as shown on Figures 3.3-1 through 3.3-14. The physical arrangement of the radwaste building and the diesel generator building is as described in the Design Description of this Section 3.3.

2. a) The nuclear island structures, including the critical sections listed in Table 3.3-7, are seismic Category I and are designed and constructed to withstand design basis loads, as specified in the Design Description, without loss of structural integrity and the safety-related functions. The design bases loads are those loads associated with:

   - Normal plant operation (including dead loads, live loads, lateral earth pressure loads, and equipment loads, including hydrodynamic loads, temperature and equipment vibration);
   - External events (including rain, snow, flood, tornado, tornado generated missiles and earthquake); and
   - Internal events (including flood, pipe rupture, equipment failure, and equipment failure generated missiles).

   b) Site grade level is located relative to floor elevation 100'-0" per Table 3.3-5. Floor elevation 100'-0" is defined as the elevation of the floor at design plant grade.

   c) The containment and its penetrations are designed and constructed to ASME Code Section III, Class MC.[1]

   d) The containment and its penetrations retain their pressure boundary integrity associated with the design pressure.

   e) The containment and its penetrations maintain the containment leakage rate less than the maximum allowable leakage rate associated with the peak containment pressure for the design basis accident.

   f) The key dimensions of the nuclear island structures are as defined on Table 3.3-5.

   g) The containment vessel greater than 7 feet above the operating deck provides a heat transfer surface. A free volume exists inside the containment shell above the operating deck.

   h) The containment free volume below elevation 108' provides containment floodup during a postulated loss-of-coolant accident.

3. Walls and floors of the nuclear island structures as defined on Table 3.3-1, except for designed openings and penetrations, provide shielding during normal operations.

4. a) Walls and floors of the annex building as defined on Table 3.3-1, except for designed openings and penetrations, provide shielding during normal operations.

1. Containment isolation devices are addressed in subsection 2.2.1, Containment System.

b) The walls on the outside of the waste accumulation room in the radwaste building provide shielding from accumulated waste.

c) The walls on the outside of the packaged waste storage room in the radwaste building provide shielding from stored waste.

5. a) Exterior walls and the basemat of the nuclear island have a water barrier up to site grade.

b) The boundaries between mechanical equipment rooms and the electrical and instrumentation and control (I&C) equipment rooms of the auxiliary building as identified in Table 3.3-2 are designed to prevent flooding of rooms that contain safety-related equipment up to the maximum flood level for each room defined in Table 3.3-2.

c) The boundaries between the following rooms, which contain safety-related equipment – passive core cooling system (PXS) valve/accumulator room A (11205), PXS valve/accumulator room B (11207), and chemical and volume system (CVS) room (11209) – are designed to prevent flooding between these rooms.

6. a) The radiologically controlled area of the auxiliary building between floor elevations 66'-6" and 82'-6" contains adequate volume to contain the liquid volume of faulted liquid radwaste system (WLS) storage tanks. The available room volumes of the radiologically controlled area of the auxiliary building between floor elevations 66'-6" and 82'-6" exceeds the volume of the liquid radwaste storage tanks (WLS-MT-05A, MT-05B, MT-06A, MT-06B, MT-07A, MT-07B, MT-07C, MT-11).

b) The radwaste building packaged waste storage room has a volume greater than or equal to 1293 cubic feet.

7. a) Class 1E electrical cables, fiber optic cables associated with only one division, and raceways are identified according to applicable color-coded Class 1E divisions.

b) Class 1E divisional electrical cables and communication cables associated with only one division are routed in their respective divisional raceways.

c) Separation is maintained between Class 1E divisions in accordance with the fire areas as identified in Table 3.3-3.

d) Physical separation is maintained between Class 1E divisions and between Class 1E divisions and non-Class 1E cables.

e) Class 1E communication cables which interconnect two divisions are routed and separated such that the Protection and Safety Monitoring System voting logic is not defeated by the loss of any single raceway or fire area.

8. Systems, structures, and components identified as essential targets are protected from the dynamic and environmental effects of postulated pipe ruptures.

9. The reactor cavity sump has a minimum concrete thickness as shown on Table 3.3-5 between the bottom of the sump and the steel containment.

10. The shield building roof and the passive containment cooling system (PCS) storage tank support and retain the PCS water. The passive containment cooling system tank has a stainless steel liner which provides a barrier on the inside surfaces of the tank. Leak chase channels are provided over the tank boundary liner welds.

11. Deleted.

12. The extended turbine generator axis intersects the shield building.

13. Separation is provided between the structural elements of the turbine, annex, and radwaste buildings and the nuclear island structure. This separation permits horizontal motion of the buildings in a safe shutdown earthquake without impact between structural elements of the buildings.

14. The external walls, doors, ceiling, and floors in the main control room, the central alarm station, and the secondary alarm station are bullet-resistant to at least Underwriters Laboratory Ballistic Standard 752, level 4.

15. Deleted.

16. Secondary security power supply system for alarm annunciator equipment and non-portable communications equipment is located within a vital area.

17. Vital areas are locked and alarmed with active intrusion detection systems that annunciate in the central and secondary alarm stations upon intrusion into a vital area.

18. Deleted.

Inspections, Tests, Analyses, and Acceptance Criteria

Table 3.3-6 specifies the inspections, tests, analyses, and associated acceptance criteria for the buildings.

Table 3.3-1
Definition of Wall Thicknesses for Nuclear Island Buildings, Turbine Building, and Annex Building(1)

Wall or Section Description	Column Lines	Floor Elevation or Elevation Range	Concrete Thickness(2)(3)(4)(5)	Applicable Radiation Shielding Wall (Yes/No)
Containment Building Internal Structure				
Shield Wall between Reactor Vessel Cavity and RCDT Room	E-W wall parallel with column line 7	From 71'-6" to 83'-0"	3'-0"	Yes
West Reactor Vessel Cavity Wall	N-S wall parallel with column line N	From 83'-0" to 98'-0"	7'-6"	Yes
North Reactor Vessel Cavity Wall	E-W wall parallel with column line 7	From 83'-0" to 98'-0"	9'-0"	Yes
East Reactor Vessel Cavity Wall	N-S wall parallel with column line N	From 83'-0" to 98'-0"	7'-6"	Yes
West Refueling Cavity Wall	N-S wall parallel with column line N	From 98'-0" to 135'-3"	4'-0"	Yes
North Refueling Cavity Wall	E-W wall parallel with column line 7	From 98'-0" to 135'-3"	4'-0"	Yes
East Refueling Cavity Wall	N-S wall parallel with column line N	From 98'-0" to 135'-3"	4'-0"	Yes
South Refueling Cavity Wall	E-W wall parallel with column line 7	From 98'-0" to 135'-3"	4'-0"	Yes
South wall of west steam generator compartment	Not Applicable	From 103'-0" to 153'-0"	2'-6"	Yes
West wall of west steam generator compartment	Not Applicable	From 103'-0" to 153'-0"	2'-6"	Yes
North wall of west steam generator compartment	Not Applicable	From 103'-0" to 153'-0"	2'-6"	Yes
South wall of pressurizer compartment	Not Applicable	From 103'-0" to 153'-6"	2'-6"	Yes
West wall of pressurizer compartment	Not Applicable	From 107'-2" to 160'-0"	2'-6"	Yes
North wall of pressurizer compartment	Not Applicable	From 107'-2" to 160'-0"	2'-6"	Yes
East wall of pressurizer compartment	Not Applicable	From 118'-6" to 160'-0"	2'-6"	Yes
North-east wall of in-containment refueling water storage tank	Parallel to column line N	From 103'-0" to 135'-3"	2'-6"	No
West wall of in-containment refueling water storage tank	Not applicable	From 103'-0" to 135'-3"	5/8" steel plate with stiffeners	No
South wall of east steam generator compartment	Not Applicable	From 87'-6" to 153'-0"	2'-6"	Yes

1. The column lines and floor elevations are identified and included on Figures 3.3-1 through 3.3-13.
2. These wall (and floor) thicknesses have a construction tolerance of ±1 inch, except for exterior walls below grade where the tolerance is +12 inches, -1 inch.
3. For walls that are part of structural modules, the concrete thickness also includes the steel face plates.
4. For floors with steel surface plates, the concrete thickness also includes the plate thickness.
5. Where a wall (or a floor) has openings, the concrete thickness does not apply at the opening.
6. The elevation ranges for the shield building items are rounded to the nearest inch.

Table 3.3-1 (cont.)
Definition of Wall Thicknesses for Nuclear Island Buildings, Turbine Building, and Annex Building(1)

Wall or Section Description	Column Lines	Floor Elevation or Elevation Range	Concrete Thickness(2)(3)	Applicable Radiation Shielding Wall (Yes/No)
East wall of east steam generator compartment	Not Applicable	From 94'-0" to 153'-0"	2'-6"	Yes
North wall of east steam generator compartment	Not Applicable	From 87'-6" to 153'-0"	2'-6"	Yes
Shield Building(6)				
Shield Building Cylinder	Not Applicable	From 100'-0" to 248'-6"	3'-0" (including 3/4 inch thick min. steel plate liner on each face on portion not protected by auxiliary building)	Yes
Air Inlet	Not Applicable	From 248'-6" to 251'-6"	3'-0" (including 3/4 inch thick min. steel plate liner on each face)	Yes
		From 251'-6" to 254'-6"	3'-0" to 4'-6" (including 1 inch thick steel plate liner on each face)	Yes
		From 254'-6" to 266'-4"	4'-6" (including 1 inch thick min. steel plate liner on each face)	Yes
Tension Ring	Not Applicable	From 266'-4" to 271'-6" (at top of plate)	4'-6" (including 1-1/2 inch thick steel plate liner on each face)	Yes
Conical Roof	Not Applicable	From 271'-6" to 293'-9"	3'-0" (including 1/2 inch thick min. steel plate liner on bottom face, outside of PCS tank exterior wall)	Yes
PCS Tank External Cylindrical Wall	Not Applicable	From 293'-9" to 328'-9"	2'-0"	Yes
PCS Tank Internal Cylindrical Wall	Not Applicable	From 309'-4" to 329'-0"	1'-6"	Yes

Table 3.3-1 (cont.)
Definition of Wall Thicknesses for Nuclear Island Buildings, Turbine Building, and Annex Building(1)

Wall or Section Description	Column Lines	Floor Elevation or Elevation Range	Concrete Thickness(2)(3)	Applicable Radiation Shielding Wall (Yes/No)
PCS Tank Roof	Not Applicable	328'-9" (Lowest) 329'-0" (Highest)	1'-3"	No
Nuclear Island Basemat	Below shield building	From 60'-6" to containment vessel or 82'-6"	6'-0" to 22'-0" (varies)	No
Auxiliary Building Walls/Floors Radiologically Controlled				
Column Line 1 wall	From I to N	From 66'-6" to 100'-0"	3'-0"	No
Column Line 1 wall	From I to 5'-6" east of L-2	From 100'-0" to 180'-0"	2'-3"	Yes
Column Line 1 wall	From 5'-6" east of L-2 to N	From 100'-0" to 125'-0"	3'-0"	Yes
Column Line 1 wall	From 5'-6" east of L-2 to N	From 125'-0" to 180'-0"	2'-3"	Yes
Column Line 2 wall	From I to K-2	From 66'-6" to 135'-3"	2'-6"	Yes
Column Line 2 wall	From K-2 to L-2	From 66'-6" to 135'-3"	5'-0"	Yes
Column Line 2 wall	From L-2 to N	From 98'-1" to 135'-3"	2'-6"	Yes
Column Line 2 wall	From I to J-1	From 135'-3" to 153'-0"	2'-0"	Yes
Column Line 3 wall	From J-1 to J-2	From 66'-6" to 82'-6"	2'-6"	Yes
Column Line 3 wall	From J-1 to J-2	From 100'-0" to 135'-3"	2'-6"	Yes
Column Line 3 wall	From J-2 to K-2	From 66'-6" to 135'-3"	2'-6"	Yes
Column Line 3 wall	From K-2 to L-2	From 66'-6" to 92'-8 1/2"	2'-6"	Yes
Column Line 4 wall	From I to J-1	From 66'-6" to 153'-0"	2'-6"	Yes
Column Line 4 wall	From J-1 to J-2	From 66'-6" to 92'-6"	2'-6"	Yes
Column Line 4 wall	From J-1 to J-2	From 107'-2" to 135'-3"	2'-6"	Yes
Column Line 4 wall	From J-2 to K-2	From 66'-6" to 135'-3"	2'-6"	Yes
Column Line 4 wall	From I to intersection with shield building wall	From 135'-3" to 180'-0"	2'-0"	Yes
Column Line 5 wall	From I to shield building; with opening east of J-1 (below 107'-2" floor).	From 66'-6" to 160'-6"	2'-0"	Yes
Column Line 7.1 wall	From 1 to 8' east of J-1	66'-6"to 82'-6"	2'-0"	Yes

Table 3.3-1 (cont.)
Definition of Wall Thicknesses for Nuclear Island Buildings, Turbine Building, and Annex Building(1)

Wall or Section Description	Column Lines	Floor Elevation or Elevation Range	Concrete Thickness(2)(3)	Applicable Radiation Shielding Wall (Yes/No)
Column Line 7.2 wall	From I to 5'-6" east of J-1	From 66'-6" to 100'-0"	2'-0"	Yes
Column Line I wall	From 1 to 7.3	From 66'-6" to 100'-0"	3'-0"	No
Column Line I wall	From 1 to 4	From 100'-0" to 180'-0"	2'-0"	Yes
Column Line I wall	From 4 to 5	From 100'-0" to 160'-6"	2'-0"	No
Column Line J-1 wall	From 1 to 2	From 82'-6" to 100'-0"	2'-0"	Yes
Column Line J-1 wall	From 2 to 4	From 66'-6" to 135'-3"	2'-6"	Yes
Column Line J-1 wall	From 2 to 4	From 135'-3" to 153'-0"	2'-0"	Yes
Column Line J-1 wall	From 4 to shield building	From 66'-6" to 107'-2"	2'-0"	Yes
Column Line J-2 wall	From 2 to 4	From 66'-6" to 135'-3"	2'-6"	Yes
Column Line J-2 wall	From 4 to intersection with shield building wall	From 66'-6" to 135'-3"	2'-0"	Yes
Column Line K-2 wall	From 2 to 4	From 66'-6" to 135'-3"	4'-9"	Yes
Column Line L-2 wall	From 2 to 4	From 66'-6" to 135'-3"	4'-0"	Yes
Column Line N wall	From 1 to 2	From 66'-6" to 100'-0"	3'-0"	No
Column Line N wall	From 1 to 12'-9" north of 1	From 100'-0" to 125'-0"	3'-9"	No
Column Line N wall	From 1 to 12'-9" north of 1	From 125'-0" to 135'-0"	2'-0"	No
Column Line N wall	From 12'-9" north of 1 to 2	From 100'-0" to 118'-2 1/2"	3'-0"	No
Column Line N wall	From 12'-9" north of 1 to 2	From 118'-2 1/2" to 135'-3"	2'-0"	No
Column Line N wall	From 1 to 2	From 118'-2 1/2" to 135'-3"	2'-0"	Yes
Column Line N wall	From 2 to 4	From 66'-6" to 98'-1"	3'-0"	No
Column Line N wall	From 2 to 4	From 98'-1" to 135'-3"	5'-6"	Yes
Column Line N wall	From 1 to 4	From 135'-3" to 180'-0"	2'-0"	Yes
Labyrinth Wall between Col. Line 3 and 4 and J-1 to 7'-3" from J-2	Not Applicable	From 82'-6" to 92'-6"	2'-6"	Yes
N-S Shield Wall (low wall)	Between K-2 and L-2 extending from column line 1 north	From 100'-0" to 107'-2"	2'-6"	Yes

Table 3.3-1 (cont.)
Definition of Wall Thicknesses for Nuclear Island Buildings, Turbine Building, and Annex Building(1)

Wall or Section Description	Column Lines	Floor Elevation or Elevation Range	Concrete Thickness(2)(3)	Applicable Radiation Shielding Wall (Yes/No)
N-S Shield Wall	Between K-2 and L-2 extending from column line 1 north	From 100'-0" to 125'-0"	2'-3"	Yes
E-W Shield Wall	Between 1 and 2 extending from column line N east	From 100'-0" to 125'-0"	2'-9"	Yes
Auxiliary Area Basemat	From 1-7.3 and I-N, excluding shield building	From 60'-6" to 66'-6"	6'-0"	No
Floor	From 1 to 2 and I to N	82'-6"	2'-0"	Yes
Floor	From 2 to 4 and J-1 to J-2	82'-6"	2'-0"	Yes
Floor	From 4 to 5 and J-1 to J-2	82'-6"	0'-9"	Yes
Pipe Chase Floor	From 2 to 5 and J-1 to J-2	92'-6"	2'-0"	Yes
Floor	From 2 to 3 and J-2 to K-2	90'-3"	3'-0"	Yes
Floor	From 3 to 4 and J-2 to K-2	92'-6"	2'-0"	Yes
Floor	From 4 to 7.3 and I to J-1	82'-6"	2'-0"	Yes
Floor	From 1 to 2 and I to N	100'-0"	3'-0"	Yes
Floor	From 2 to 4 and K-2 to L-2	92'-8 1/2"	3'-2 1/2"	Yes
Floor	From I to J-2 and 4 to intersecting vertical wall before column line 5	107'-2"	2'-0"	Yes
Floor	From I to shield building wall and from intersecting vertical wall before column line 5 to column line 5	105'-0"	0'-9"	Yes
Floor	From 1 to 10'-0" north of 1 and L-2 to N	125'-0"	3'-0"	Yes
Floor	From 10'-0" north of 1 to 2 and L-2 to N	118'-2 1/2"	2'-0"	Yes
Floor	From 3 to 4 and J-2 to K-2	117'-6"	2'-0"	Yes
Floor	From 2 to 4 and I to J-1	153'-0"	0'-9"	Yes
Roof	From 1 to 4 and I to N	180'-0"	1'-3"	Yes

Table 3.3-1 (cont.)
Definition of Wall Thicknesses for Nuclear Island Buildings, Turbine Building, and Annex Building(1)

Wall or Section Description	Column Lines	Floor Elevation or Elevation Range	Concrete Thickness(2)(3)	Applicable Radiation Shielding Wall (Yes/No)
Floor	From 4 to short of column line 5 and from I to intersection with shield building wall	135'-5"	0'-9"	Yes
Floor	From short of column line 5 to column line 5 and from I to intersection with shield building wall	133'-0"	0'-9"	Yes
Auxiliary Building Walls/Floors Non-Radiologically Controlled				
Column Line 11 wall	From I to Q	From 66'-6" to 100'-0"	3'-0"	No
Column Line 11 wall	From I to Q	From 100'-0" to 117'-6"	2'-0"	Yes
Column Line 11 wall	From I to L	From 117'-6" to 153'-0"	2'-0"	Yes
Column Line 11 wall	From L to M	From 117'-6" to 135'-3"	4'-0"	Yes
Column Line 11 wall	From M to P	From 117'-6" to 135'-3"	2'-0"	Yes
Column Line 11 wall	From P to Q	From 117'-6" to 135'-3"	4'-0"	Yes
Column Line 11 wall	From L to Q	From 135'-3" to 153'-0"	2'-0"	Yes
Column Line 7.3 wall	From I to shield building	From 66'-6" to 100'-0"	3'-0"	Yes
Column Line 7.3 wall	From I to shield building	From 100'-0" to 160'-6"	2'-0"	No
Column Line I wall	From 7.3 to 11	From 66'-6" to 100'-0"	3'-0"	No
Column Line I wall	From 7.3 to 11	From 100'-0" to 153'-0"	2'-0"	No
Column Line I wall	From 5 to 7.3	From 100'-0" to 160'-6"	2'-0"	No
Column Line J wall	From 7.3 to 11	From 66'-6" to 117'-6"	2'-0"	No
Column Line K wall	From 7.3 to 11	From 60'-6" to 135'-3"	2'-0"	Yes
Column Line L wall	From shield building wall to 11	From 60'-6" to 153'-0"	2'-0"	Yes
Column Line M wall	From shield building wall to 11	From 66'-6" to 153'-0"	2'-0"	Yes
Column Line P wall	From shield building wall to 11	From 66'-6" to 153'-0"	2'-0"	Yes
Column Line Q wall	From shield building wall to 11	From 66'-6" to 100'-0"	3'-0"	No
Column Line Q wall	From shield building wall to 11	From 100'-0" to 153'-0"	2'-0"	Yes
Column Line 9.2 wall	From I to J and K to L	From 117'-6" to 135'-3"	2'-0"	Yes

Table 3.3-1 (cont.)
Definition of Wall Thicknesses for Nuclear Island Buildings, Turbine Building, and Annex Building(1)

Wall or Section Description	Column Lines	Floor Elevation or Elevation Range	Concrete Thickness(2)(3)	Applicable Radiation Shielding Wall (Yes/No)
Labyrinth Wall between Column Line 7.3 and 9.2 and J to K	J to K	From 117'-6" to 135'-3"	2'-0"	Yes
Auxiliary Area Basemat	From 7.3-11 and I-Q, excluding shield building	From 60'-6" to 66'-6"	6'-0"	No
Floor	From 5 to 7.3 and I to shield building wall	100'-0"	2'-0"	Yes
Floor	From K to L and shield building wall to column line 10	100'-0"	0'-9"	Yes
Main Control Room Floor	From 9.2 to 11 and I to L	117'-6"	2'-0"	Yes
Floor	Bounded by shield bldg, 7.3, J, 9.2 and L	117'-6"	2'-0"	Yes
Floor	From 9.2 to 11 and L to Q	117'-6"	2'-0"	Yes
Floor	From 5 to 7.3 and from I to intersection with shield building wall	135'-3"	0'-9"	Yes
Annex Building				
Column line 2 wall	From E to H	From 107'-2" to 135'-3"	19 3/4"	Yes
Column line 4 wall	From E to H	From 107'-2" to 162'-6" & 166'-0"	2'-0"	Yes
N-S Shield Wall between E and F	From 2 to 4	From 107'-2" to 135'-3"	1'-0"	Yes
Column line 4.1 wall	From E to H	From 107'-2" to 135'-3"	2'-0"	Yes
E-W Labyrinth Wall between column line 7.1 and 7.8 and G to H	Not Applicable	From 100'-0" to 112'-0"	2'-0"	
N-S Labyrinth Wall between column line 7.8 and 9 and G to H	Not Applicable	From 100'-0" to 112'-0"	2'-0"	
E-W Labyrinth Wall between column line 7.1 and 7.8 and G to H	Not Applicable	From 100'-0" to 112'-0"	2'-0"	Yes
N-S Shield Wall on Column line F	From 4.1 North	From 100'-0" to 117'-6"	1'-0"	Yes
Column Line 9 wall	From E to connecting wall between G and H	From 107'-2" to 117'-6"	2'-0"	Yes
Column Line E wall	From 9 to 13	From 100'-0" to 135'-3"	2'-0"	Yes
Column Line 13 wall	From E to I.1	From 100'-0" to 135'-3"	2'-0"	Yes

Table 3.3-1 (cont.)
Definition of Wall Thicknesses for Nuclear Island Buildings, Turbine Building, and Annex Building(1)

Wall or Section Description	Column Lines	Floor Elevation or Elevation Range	Concrete Thickness(2)(3)	Applicable Radiation Shielding Wall (Yes/No)
Column Line I.1 wall	From 11.09 to 13	From 100'-0" to 135'-3"	2'-0"	Yes
Corridor Wall between G and H	From 9 to 13	From 100'-0" to 135'-3"	1'-6"	Yes
Column Line 9 wall	From I to H	From 117'-6" to 158'-0"	2'-0"	Yes
Floor	2 to 4 from shield wall between E and F to column line H	135'-3"	0'-6"	Yes
Floor	From 4 to 4.1 and E to H	135'-3"	1'-0"	Yes
Floor	From 9 to 13 and E to I.1	117'-6"	0'-6"	Yes
Floor	From 9 to 13 and E to I.1	135'-3"	0'-8"	Yes
Containment Filtration Rm A (North Wall)	Between column line E to H	From 135'-3" to 158'-0"	1'-0"	Yes
Containment Filtration Rm A (East wall)	Between column line E to F	From 135'-3" to 158'-0"	1'-0"	Yes
Containment Filtration Rm A (West wall)	Between column line G to H	From 135'-3" to 158'-0"	1'-0"	Yes
Containment Filtration Rm A (Floor)	Between column line E to H	135'-3"	1'-0"	Yes
Containment Filtration Rm B (Floor)	Between column line E to H	146'-3"	0'-6"	Yes
Containment Filtration Rm B (West wall)	Between column line G to H	From 146'-3" to 158'-0"	1'-0"	Yes
Turbine Building				
Wall adjacent to Column Line I.2	From Col. Line 11.05 to 11.2	From 100'-0" to 161'-0"	2'-0"	No
Wall along Column Line 11.2	From near I.2 to near Col. Line R	From 100'-0" to 161'-0"	2'-0"	No
Wall adjacent to Column Line R	From Col. Line 11.2 to Col. Line 11.05	From 100'-0" to 161'-0"	2'-0"	No
Wall along Column Line 11.05	From near Col. Line R to Col. Line Q	From 100'-0" to 161'-0"	2'-0"	No
	From Col. Line K.4 to near Col. Line I.2	From 100'-0" to 161'-0"	2'-0"	No

Table 3.3-2
Nuclear Island Building Room Boundaries
Required to Have Flood Barrier Floors and Walls

Boundary/ Maximum Flood Level (inches)	Between Room Number to Room Number	
	Room with Postulated Flooding Source	Adjacent Room
Floor/36	12306	12211
Floor/3	12303	12203/12207
Floor/3	12313	12203/12207
Floor/1	12300	12201/12202/12207 12203/12204/12205
Floor/3	12312	12212
Wall/36	12306	12305
Floor/1	12401	12301/12302/12303 12312/12313
Wall/1	12401	12411/12412
Floor/36	12404	12304
Floor/4	12405	12305
Floor/36	12406	12306
Wall/36	12404	12401
Wall/1	12421	12452
Floor/3	12501	12401/12411/12412
Floor/3	12555	12421/12423/12422
Wall/36	12156/12158	12111/12112

Table 3.3-3
Class 1E Divisions in Nuclear Island Fire Areas

Fire Area Number	Class 1E Divisions			
	A	C	B	D
Auxiliary Building Radiologically Controlled				
1200 AF 01	Yes	Yes	–	–
1204 AF 01	Yes	–	–	–
Auxiliary Building Non-Radiologically Controlled				
1200 AF 03	–	–	Yes	Yes
1201 AF 02	–	–	Yes	–
1201 AF 03	–	–	–	Yes
1201 AF 04	–	–	Yes	Yes
1201 AF 05	–	–	Yes	Yes
1201 AF 06	–	–	Yes	Yes
1202 AF 03	–	Yes	–	–
1202 AF 04	Yes	–	–	–
1220 AF 01	–	–	Yes	Yes
1220 AF 02	–	–	–	Yes
1230 AF 01	Yes	Yes	–	–
1230 AF 02	–	–	Yes	Yes
1240 AF 01	Yes	Yes	–	–
1242 AF 02	Yes		–	

Note: Dash (–) indicates not applicable.

Table 3.3-4 is not used.

Table 3.3-5
Key Dimensions of Nuclear Island Building Features

Key Dimension	Reference Dimension (Figure 3.3-14)	Nominal Dimension	Tolerance
Distance between Outside Surface of walls at Column Line I & N when Measured at Column Line 1	X1	91 ft-0 in	+3 ft -1 ft
Distance from Outside Surface of wall at Column Line 1 to Column Line 7 when Measured at Column Line I	X2	138 ft-0 in	+3 ft -1 ft
Distance from Outside Surface of wall at Column Line 11 to Column Line 7 when Measured at Column Line I	X3	118 ft-0 in	+3 ft -1 ft
Distance between Outside Surface of walls at Column Line I & Q when Measured at Column Line 11	X4	117 ft-6 in	+3 ft -1 ft
Distance from Outside Surface of wall at Column Line Q to Column Line N when Measured at Column Line 11	X5	29 ft-0 in	+3 ft -1 ft
Distance between Outside Surface of shield building wall to shield building centerline when Measured on West Edge of Shield Building	X6	72 ft-6 in	+3 ft -1 ft
Distance between shield building centerline to Reactor Vessel centerline when Measured along Column Line N in North-South Direction	X7	7 ft-6 in	± 3 in
Distance from Bottom of Containment Sump to Top Surface of Embedded Containment Shell	–	2 ft-8 in	± 3 in
Distance from top of Basemat to Design Plant Grade	–	33 ft-6 in	± 1 ft
Distance of Design Plant Grade (Floor elevation 100'-0") relative to Site Grade	–	0 ft	± 3 ft-6 in
Distance from Design Plant Grade to Top Surface of Shield Building Roof	–	229 ft-0 in	± 1 ft

Table 3.3-6
Inspections, Tests, Analyses, and Acceptance Criteria

Design Commitment	Inspections, Tests, Analyses	Acceptance Criteria
1. The physical arrangement of the nuclear island structures and the annex building is as described in the Design Description of this Section 3.3 and Figures 3.3-1 through 3.3-14. The physical arrangement of the radwaste building, the turbine building, and the diesel generator building is as described in the Design Description of this Section 3.3.	An inspection of the nuclear island structures, the annex building, the radwaste building, the turbine building, and the diesel generator building will be performed.	The as-built nuclear island structures, the annex building, the radwaste building, the turbine building, and the diesel generator building conform with the physical arrangement as described in the Design Description of this Section 3.3 and Figures 3.3-1 through 3.3-14.
2.a) The nuclear island structures, including the critical sections listed in Table 3.3-7, are seismic Category I and are designed and constructed to withstand design basis loads as specified in the Design Description, without loss of structural integrity and the safety-related functions.	i) An inspection of the nuclear island structures will be performed. Deviations from the design due to as-built conditions will be analyzed for the design basis loads.	i.a) A report exists which reconciles deviations during construction and concludes that the as-built containment internal structures, including the critical sections, conform to the approved design and will withstand the design basis loads specified in the Design Description without loss of structural integrity or the safety-related functions. i.b) A report exists which reconciles deviations during construction and concludes that the as-built shield building structures, including the critical sections, conform to the approved design and will withstand the design basis loads specified in the Design Description without loss of structural integrity or the safety-related functions. i.c) A report exists which reconciles deviations during construction and concludes that the as-built structures in the non-radiologically controlled area of the auxiliary building, including the critical sections, conform to the approved design and will withstand the design basis loads specified in the Design Description without loss of structural integrity or the safety-related functions.

Table 3.3-6 (cont.)
Inspections, Tests, Analyses, and Acceptance Criteria

Design Commitment	Inspections, Tests, Analyses	Acceptance Criteria
		i.d) A report exists which reconciles deviations during construction and concludes that the as-built structures in the radiologically controlled area of the auxiliary building, including the critical sections, conform to the approved design and will withstand the design basis loads specified in the Design Description without loss of structural integrity or the safety-related functions.
	ii) An inspection of the as-built concrete thickness will be performed.	ii.a) A report exists that concludes that the containment internal structures as-built concrete thicknesses conform to the building sections defined in Table 3.3-1. ii.b) A report exists that concludes that the as-built concrete thicknesses of the shield building sections conform to the building sections defined in Table 3.3-1. ii.c) A report exists that concludes that as-built concrete thicknesses of the non-radiologically controlled area of the auxiliary building sections conform to the building sections defined in Table 3.3-1. ii.d) A report exists that concludes that the as-built concrete thicknesses of the radiologically controlled area of the auxiliary building sections conform to the building sections defined in Table 3.3-1. ii.e) A report exists that concludes that the as-built concrete thicknesses of the annex building sections conform with the building sections defined in Table 3.3-1.

Table 3.3-6 (cont.)
Inspections, Tests, Analyses, and Acceptance Criteria

Design Commitment	Inspections, Tests, Analyses	Acceptance Criteria
		ii.f) A report exists that concludes that the as-built concrete thicknesses of the turbine building sections conform to the building sections defined in Table 3.3-1.
2.b) Site grade level is located relative to floor elevation 100'-0" per Table 3.3-5.	Inspection of the as-built site grade will be conducted.	Site grade is consistent with design plant grade within the dimension defined on Table 3.3-5.
2.c) The containment and its penetrations are designed and constructed to ASME Code Section III, Class MC.(1)	See Tier 1 Material, Table 2.2.1-3, Items 2a, 2b, 3a, and 3b. .	See Tier 1 Material, Table 2.2.1-3, Items 2a, 2b, 3a, and 3b. .
2.d) The containment and its penetrations retain their pressure boundary integrity associated with the design pressure.	See Tier 1 Material, Table 2.2.1-3, Items 4a and 4b..	See Tier 1 Material, Table 2.2.1-3, Items 4a and 4b.
2.e) The containment and its penetrations maintain the containment leakage rate less than the maximum allowable leakage rate associated with the peak containment pressure for the design basis accident.	See Tier 1 Material, Table 2.2.1-3, Items 4a, 4b, and 7.	See Tier 1 Material, Table 2.2.1-3, Items 4a, 4b, and 7.
2.f) The key dimensions of nuclear island structures are defined on Table 3.3-5.	An inspection will be performed of the as-built configuration of the nuclear island structures.	A report exists and concludes that the key dimensions of the as-built nuclear island structures are consistent with the dimensions defined on Table 3.3-5.
2.g) The containment vessel greater than 7 feet above the operating deck provides a heat transfer surface. A free volume exists inside the containment shell above the operating deck.	The maximum containment vessel inside height from the operating deck is measured and the inner radius below the spring line is measured at two orthogonal radial directions at one elevation.	The containment vessel maximum inside height from the operating deck is 146'-7" (with tolerance of +12", -6"), and the inside diameter is 130 feet nominal (with tolerance of +12", -6").

1. Containment isolation devices are addressed in subsection 2.2.1, Containment System

Table 3.3-6 (cont.)
Inspections, Tests, Analyses, and Acceptance Criteria

Design Commitment	Inspections, Tests, Analyses	Acceptance Criteria
2.h) The free volume in the containment allows for floodup to support long-term core cooling for postulated loss-of-coolant accidents.	An inspection will be performed of the as-built containment structures and equipment. The portions of the containment included in this inspection are the volumes that flood with a loss-of-coolant accident in passive core cooling system valve/equipment room B (11207). The in-containment refueling water storage tank volume is excluded from this inspection.	A report exists and concludes that the floodup volume of this portion of the containment is less than 73,500 ft^3 to an elevation of 108'.
3. Walls and floors of the nuclear island structures as defined on Table 3.3-1 except for designed openings or penetrations provide shielding during normal operations.	Inspection of the as-built nuclear island structures wall and floor thicknesses will be performed.	a) A report exists and concludes that the shield walls and floors of the containment internal structures as defined in Table 3.3-1, except for designed openings or penetrations, are consistent with the concrete wall thicknesses provided in Table 3.3-1. b) A report exists and concludes that the shield walls of the shield building structures as defined in Table 3.3-1 except for designed openings or penetrations are consistent with the concrete wall thicknesses provided in Table 3.3-1. c) A report exists and concludes that the shield walls and floors of the non-radiologically controlled area of the auxiliary building as defined in Table 3.3-1 except for designed openings or penetrations are consistent with the concrete wall thicknesses provided in Table 3.3-1. d) A report exists and concludes that the shield walls and floors of the radiologically controlled area of the auxiliary building as defined in Table 3.3-1 except for designed openings or penetrations are consistent with the concrete wall thicknesses provided in Table 3.3-1.

Table 3.3-6 (cont.)
Inspections, Tests, Analyses, and Acceptance Criteria

Design Commitment	Inspections, Tests, Analyses	Acceptance Criteria
4.a) Walls and floors of the annex building as defined on Table 3.3-1 except for designed openings or penetrations provide shielding during normal operations.	Inspection of the as-built annex building wall and floor thicknesses will be performed.	A report exists and concludes that the shield walls and floors of the annex building as defined on Table 3.3-1 except for designed openings or penetrations are consistent with the minimum concrete wall thicknesses provided in Table 3.3-1.
4.b) Walls of the waste accumulation room in the radwaste building except for designed openings or penetrations provide shielding during normal operations.	Inspection of the as-built radwaste building wall thicknesses will be performed.	A report exists and concludes that the shield walls of the waste accumulation room in the radwaste building except for designed openings or penetrations are consistent with the minimum concrete wall thicknesses of 1'-4".
4.c) Walls of the packaged waste storage room in the radwaste building except for designed openings or penetrations provide shielding during normal operations.	Inspection of the as-built radwaste building wall thicknesses will be performed.	A report exists and concludes that the shield walls of the packaged waste storage room in the radwaste building except for the wall shared with the waste accumulation room and designed openings or penetrations are consistent with the minimum concrete wall thicknesses of 2'.
5.a) Exterior walls and the basemat of the nuclear island have a water barrier up to site grade.	An inspection of the as-built water barrier will be performed during construction.	A report exists that confirms that a water barrier exists on the nuclear island exterior walls up to site grade.
5.b) The boundaries between rooms identified in Table 3.3-2 of the auxiliary building are designed to prevent flooding of rooms that contain safety-related equipment.	An inspection of the auxiliary building rooms will be performed.	A report exists that confirms floors and walls as identified on Table 3.3-2 have provisions to prevent flooding between rooms up to the maximum flood levels for each room defined in Table 3.3-2.

Table 3.3-6 (cont.)
Inspections, Tests, Analyses, and Acceptance Criteria

Design Commitment	Inspections, Tests, Analyses	Acceptance Criteria
5.c) The boundaries between the following rooms, which contain safety-related equipment – PXS valve/accumulator room A (11205), PXS valve/accumulator room B (11207), and CVS room (11209) – are designed to prevent flooding between these rooms.	An inspection of the boundaries between the following rooms which contain safety-related equipment – PXS Valve/ Accumulator Room A (11205), PXS Valve/Accumulator Room B (11207), and CVS Room (11209) – will be performed.	A report exists that confirms that flooding of the PXS Valve/ Accumulator Room A (11205), and the PXS/Accumulator Room B (11207) is prevented to a maximum flood level as follows: PXS A 110'-2", PXS B 110'-1"; and of the CVS room (11209) to a maximum flood level of 110'-0".
6.a) The available room volumes of the radiologically controlled area of the auxiliary building between floor elevations 66'-6" and 82'-6" exceed the volume of the liquid radwaste storage tanks (WLS-MT-05A, MT-05B, MT-06A, MT-06B, MT-07A, MT-07B, MT-07C, MT-11).	An inspection will be performed of the as-built radiologically controlled area of the auxiliary building between floor elevations 66'-6" and 82'-6" to define volume.	A report exists and concludes that the as-built available room volumes of the radiologically controlled area of the auxiliary building between floor elevations 66'-6" and 82'-6" exceed the volume of the liquid radwaste storage tanks (WLS-MT-05A, MT-05B, MT-06A, MT-06B, MT-07A, MT-07B, MT-07C, MT-11).
6.b) The radwaste building package waste storage room has a volume greater than or equal to 1293 cubic feet.	An inspection of the radwaste building packaged waste storage room (50352) is performed.	The volume of the radwaste building packaged waste storage room (50352) is greater than or equal to 1293 cubic feet.
7.a) Class 1E electrical cables, communication cables associated with only one division, and raceways are identified according to applicable color-coded Class 1E divisions.	Inspections of the as-built Class 1E cables and raceways will be conducted.	a) Class 1E electrical cables, and communication cables inside containment associated with only one division, and raceways are identified by the appropriate color code. b) Class 1E electrical cables, and communication cables in the non-radiologically controlled area of the auxiliary building associated with only one division, and raceways are identified by the appropriate color code.

Table 3.3-6 (cont.)
Inspections, Tests, Analyses, and Acceptance Criteria

Design Commitment	Inspections, Tests, Analyses	Acceptance Criteria
		c) Class 1E electrical cables, and communication cables in the radiologically controlled area of the auxiliary building associated with only one division, and raceways are identified by the appropriate color code.
7.b) Class 1E divisional electrical cables and communication cables associated with only one division are routed in their respective divisional raceways.	Inspections of the as-built Class 1E divisional cables and raceways will be conducted.	a) Class 1E electrical cables and communication cables inside containment associated with only one division are routed in raceways assigned to the same division. There are no other safety division electrical cables in a raceway assigned to a different division. b) Class 1E electrical cables and communication cables in the non-radiologically controlled area of the auxiliary building associated with only one division are routed in raceways assigned to the same division. There are no other safety division electrical cables in a raceway assigned to a different division. c) Class 1E electrical cables and communication cables in the radiologically controlled area of the auxiliary building associated with only one division are routed in raceways assigned to the same division. There are no other safety division electrical cables in a raceway assigned to a different division.

Table 3.3-6 (cont.)
Inspections, Tests, Analyses, and Acceptance Criteria

Design Commitment	Inspections, Tests, Analyses	Acceptance Criteria
7.c) Separation is maintained between Class 1E divisions in accordance with the fire areas as identified in Table 3.3-3.	i) Inspections of the as-built Class 1E division electrical cables, communication cables associated with only one division, and raceways located in the fire areas identified in Table 3.3-3 will be conducted.	i.a) Results of the inspection will confirm that the separation between Class 1E divisions in the non-radiologically controlled area of the auxiliary building is consistent with Table 3.3-3. i.b) Results of the inspection will confirm that the separation between Class 1E divisions in the radiologically controlled area of the auxiliary building is consistent with Table 3.3-3.
	ii) Inspections of the as-built fire barriers between the fire areas identified in Table 3.3-3 will be conducted.	ii.a) Results of the inspection will confirm that fire barriers exist between fire areas identified in Table 3.3-3 inside the non-radiologically controlled area of the auxiliary building. ii.b) Results of the inspection will confirm that fire barriers exist between fire areas identified in Table 3.3-3 inside the radiologically controlled area of the auxiliary building.
7.d) Physical separation is maintained between Class 1E divisions and between Class 1E divisions and non-Class 1E cables.	Inspections of the as-built Class 1E raceways will be performed to confirm that the separation between Class 1E raceways of different divisions and between Class 1E raceways and non-Class 1E raceways is consistent with the following: i) Within the main control room and remote shutdown room, the minimum vertical separation is 3 inches and the minimum horizontal separation is 1 inch.	Results of the inspection will confirm that the separation between Class 1E raceways of different divisions and between Class 1E raceways and non-Class 1E raceways is consistent with the following: i) Within the main control room and remote shutdown room, the vertical separation is 3 inches or more and the horizontal separation is 1 inch or more.

Table 3.3-6 (cont.)
Inspections, Tests, Analyses, and Acceptance Criteria

Design Commitment	Inspections, Tests, Analyses	Acceptance Criteria
	ii) Within other plant areas (limited hazard areas), the minimum separation is defined by one of the following: 1) The minimum vertical separation is 5 feet and the minimum horizontal separation is 3 feet. 2) The minimum vertical separation is 12 inches and the minimum horizontal separation is 6 inches for raceways containing only instrumentation and control and low-voltage power cables <2/0 AWG. 3) For configurations that involve exclusively limited energy content cables (instrumentation and control), the minimum vertical separation is 3 inches and the minimum horizontal separation is 1 inch. 4) For configurations involving an enclosed raceway and an open raceway, the minimum vertical separation is 1 inch if the enclosed raceway is below the open raceway. 5) For configuration involving enclosed raceways, the minimum separation is 1 inch in both horizontal and vertical directions.	ii.a) Within other plant areas inside containment (limited hazard areas), the separation meets one of the following: 1) The vertical separation is 5 feet or more and the horizontal separation is 3 feet or more except. 2) The minimum vertical separation is 12 inches and the minimum horizontal separation is 6 inches for raceways containing only instrumentation and control and low-voltage power cables <2/0 AWG. 3) For configurations that involve exclusively limited energy content cables (instrumentation and control), the minimum vertical separation is 3 inches and the minimum horizontal separation is 1 inch. 4) For configurations that involve an enclosed raceway and an open raceway, the minimum vertical separation is 1 inch if the enclosed raceway is below the raceway. 5) For configurations that involve enclosed raceways, the minimum vertical and horizontal separation is 1 inch.

Table 3.3-6 (cont.)
Inspections, Tests, Analyses, and Acceptance Criteria

Design Commitment	Inspections, Tests, Analyses	Acceptance Criteria
		ii.b) Within other plant areas inside the non-radiologically controlled area of the auxiliary building (limited hazard areas), the separation meets one of the following: 1) The vertical separation is 5 feet or more and the horizontal separation is 3 feet or more except. 2) The minimum vertical separation is 12 inches and the minimum horizontal separation is 6 inches for raceways containing only instrumentation and control and low-voltage power cables < 2/0 AWG. 3) For configurations that involve exclusively limited energy content cables (instrumentation and control), the minimum vertical separation is 3 inches and the minimum horizontal separation is 1 inch. 4) For configurations that involve an enclosed raceway, the minimum vertical separation is 1 inch if the enclosed raceway is below the raceway. 5) For configurations that involve enclosed raceways, the minimum vertical and horizontal separation is 1 inch.

Table 3.3-6 (cont.)
Inspections, Tests, Analyses, and Acceptance Criteria

Design Commitment	Inspections, Tests, Analyses	Acceptance Criteria
		ii.c) Within other plant areas inside the radiologically controlled area of the auxiliary building (limited hazard areas), the separation meets one of the following: 1) The vertical separation is 5 feet or more and the horizontal separation is 3 feet or more except. 2) The minimum vertical separation is 12 inches and the minimum horizontal separation is 6 inches for raceways containing only instrumentation and control and low-voltage power cables < 2/0 AWG.. 3) For configurations that involve exclusively limited energy content cables (instrumentation and control), the minimum vertical separation is 3 inches and the minimum horizontal separation is 1 inch. 4) For configurations that involve an enclosed raceway and an open raceway, the minimum vertical separation is 1 inch if the enclosed raceway is below the raceway. 5) For configurations that involve enclosed raceways, the minimum vertical and horizontal separation is 1 inch.

Table 3.3-6 (cont.)
Inspections, Tests, Analyses, and Acceptance Criteria

Design Commitment	Inspections, Tests, Analyses	Acceptance Criteria
	iii) Where minimum separation distances are not maintained, the circuits are run in enclosed raceways or barriers are provided.	iii.a) Where minimum separation distances are not met inside containment, the circuits are run in enclosed raceways or barriers are provided. iii.b) Where minimum separation distances are not met inside the non-radiologically controlled area of the auxiliary building, the circuits are run in enclosed raceways or barriers are provided. iii.c) Where minimum separation distances are not met inside the radiologically controlled area of the auxiliary building, the circuits are run in enclosed raceways or barriers are provided.
	iv) Separation distances less than those specified above and not run in enclosed raceways or provided with barriers are based on analysis	iv.a) For areas inside containment, a report exists and concludes that separation distances less than those specified above and not provided with enclosed raceways or barriers have been analyzed. iv.b) For areas inside the non-radiologically controlled area of the auxiliary building, a report exists and concludes that separation distances less than those specified above and not provided with enclosed raceways or barriers have been analyzed. iv.c) For areas inside the radiologically controlled area of the auxiliary building, a report exists and concludes that separation distances less than those specified above and not provided with enclosed raceways or barriers have been analyzed.

Table 3.3-6 (cont.)
Inspections, Tests, Analyses, and Acceptance Criteria

Design Commitment	Inspections, Tests, Analyses	Acceptance Criteria
	v) Non-Class 1E wiring that is not separated from Class 1E or associated wiring by the minimum separation distance or by a barrier or analyzed is considered as associated circuits and subject to Class 1E requirements.	v.a) For areas inside containment, non-Class 1E wiring that is not separated from Class 1E or associated wiring by the minimum separation distance or by a barrier or analyzed is treated as Class 1E wiring. v.b) For areas inside the non-radiologically controlled area of the auxiliary building, non-Class 1E wiring that is not separated from Class 1E or associated wiring by the minimum separation distance or by a barrier or analyzed is treated as Class 1E wiring. v.c) For areas inside the radiologically controlled area of the auxiliary building, non-Class 1E wiring that is not separated from Class 1E or associated wiring by the minimum separation distance or by a barrier or analyzed is treated as Class 1E wiring.
7.e) Class 1E communication cables which interconnect two divisions are routed and separated such that the Protection and Safety Monitoring System voting logic is not defeated by the loss of any single raceway or fire area.	Inspections of the as-built Class 1E communication cables will be conducted.	Class 1E communication cables which interconnect two divisions are routed and separated such that the Protection and Safety Monitoring System voting logic is not defeated by the loss of any single raceway or fire area.
8. Systems, structures, and components identified as essential targets are protected from the dynamic and environmental effects of postulated pipe ruptures.	Following as-built reconciliation, an inspection will be performed of the as-built high and moderate energy pipe rupture mitigation features for systems, structures, and components identified as essential targets.	An as-built Pipe Rupture Hazard Analysis Report exists and concludes that systems, structures, and components identified as essential targets can withstand the effects of postulated pipe rupture without loss of required safety function.
9. The reactor cavity sump has a minimum concrete thickness as shown in Table 3.3-5 between the bottom of the sump and the steel containment.	An inspection of the as-built containment building internal structures will be performed.	A report exists and concludes that the reactor cavity sump has a minimum concrete thickness as shown on Table 3.3-5 between the bottom of the sump and the steel containment.

Table 3.3-6 (cont.)
Inspections, Tests, Analyses, and Acceptance Criteria

Design Commitment	Inspections, Tests, Analyses	Acceptance Criteria
10. The shield building roof and PCS storage tank support and retain the PCS water sources. The PCS storage tank has a stainless steel liner which provides a barrier on the inside surfaces of the tank. Leak chase channels are provided on the tank boundary liner welds.	i) A test will be performed to measure the leakage from the PCS storage tank based on measuring the water flow out of the leak chase collection system. ii) An inspection of the PCS storage tank exterior tank boundary and shield building tension ring will be performed before and after filling of the PCS storage tank to the overflow level. The vertical elevation of the shield building roof will be measured at a location at the outer radius of the roof (tension ring) and at a location on the same azimuth at the outer radius of the PCS storage tank before and after filling the PCS storage tank.	i) A report exists and concludes that total water flow from the leak chase collection system does not exceed 10 gal/hr. ii) A report exists and concludes that inspection and measurement of the PCS storage tank and the tension ring structure, before and after filling of the tank, shows structural behavior under normal loads to be acceptable.
	iii) An inspection of the PCS storage tank exterior tank boundary and shield building tension ring will be performed before and after filling of the PCS storage tank to the overflow level. The boundaries of the PCS storage tank and the shield building roof above the tension ring will be inspected visually for excessive concrete cracking.	iii) A report exists and concludes that there is no visible water leakage from the PCS storage tank through the concrete and that there is no visible excessive cracking in the boundaries of the PCS storage tank and the shield building roof above the tension ring.
11. Deleted		
12. The extended turbine generator axis intersects the shield building.	An inspection of the as-built turbine generator will be performed.	The extended axis of the turbine generator intersects the shield building.

Table 3.3-6 (cont.)
Inspections, Tests, Analyses, and Acceptance Criteria

Design Commitment	Inspections, Tests, Analyses	Acceptance Criteria
13. Separation is provided between the structural elements of the turbine, annex and radwaste buildings and the nuclear island structure. This separation permits horizontal motion of the buildings in the safe shutdown earthquake without impact between structural elements of the buildings.	An inspection of the separation of the nuclear island from the annex, radwaste and turbine building structures will be performed. The inspection will verify the specified horizontal clearance between structural elements of the adjacent buildings, consisting of the reinforced concrete walls and slabs, structural steel columns and floor beams.	The minimum horizontal clearance above floor elevation 100′-0″ between the structural elements of the annex and radwaste buildings and the nuclear island is 4 inches. The minimum horizontal clearance above floor elevation 100′-0″ between the structural elements of the turbine building and the nuclear island is 4 inches.
14. The external walls, doors, ceiling, and floors in the main control room, the central alarm station, and the secondary alarm station are bullet-resistant to at least Underwriters Laboratory Ballistic Standard 752, level 4.	Type test, analysis, or a combination of type test and analysis will be performed for the external walls, doors, ceilings, and floors in the main control room, the central alarm station, and the secondary alarm station.	A report exists and concludes that the external walls, doors, ceilings, and floors in the main control room, the central alarm station, and the secondary alarm station are bullet-resistant to at least Underwriters Laboratory Ballistic Standard 752, level 4.
15. Deleted.		
16. Secondary security power supply system for alarm annunciator equipment and non-portable communications equipment is located within a vital area.	An inspection will be performed to ensure that the location of the secondary security power supply equipment for alarm annunciator equipment and non-portable communications equipment is within a vital area.	Secondary security power supply equipment for alarm annunciator equipment and non-portable communication equipment is located within a vital area.
17. Vital areas are locked and alarmed with active intrusion detection systems that annunciate in the central and secondary alarm stations upon intrusion into a vital area.	An inspection of the as-built vital areas, and central and secondary alarm stations are performed.	Vital areas are locked and alarmed with active intrusion detection systems and intrusion is detected and annunciated in both the central and secondary alarm stations.
18. Deleted.		

Table 3.3-7
Nuclear Island Critical Structural Sections

Containment Internal Structures
South west wall of the refueling cavity
South wall of the west steam generator cavity
North east wall of the in-containment refueling water storage tank
In-containment refueling water storage tank steel wall
Column supporting the operating floor
Auxiliary and Shield Building
South wall of auxiliary building (column line 1), elevation 66'-6" to elevation 180'-0"
Interior wall of auxiliary building (column line 7.3), elevation 66'-6" to elevation 160'-6"
West wall of main control room in auxiliary building (column line L), elevation 117'-6" to elevation 153'-0"
North wall of MSIV east compartment (column line 11 between lines L and M), elevation 117'-6" to elevation 153'-0"
Roof slab at elevation 180'-0" adjacent to shield building cylinder
Floor slab on metal decking at elevation 135'-3"
2'-0" slab in auxiliary building (tagging room ceiling) at elevation 135'-3"
Finned floor in the main control room at elevation 135'-3"
Shield building roof, exterior wall of the PCS water storage tank
Shield building roof, interior wall of the PCS water storage tank
Shield building roof, tension ring and air inlets
Divider wall between the spent fuel pool and the fuel transfer canal
Shield building SC cylinder
Shield building SC to RC connection
Nuclear Island Basemat Below Auxiliary Building
Bay between reference column lines 9.1 and 11, and K and L
Bay between reference column lines 1 and 2 and K-2 and N

Security-Related Information, Withheld Under 10 CFR 2.390d

Figure 3.3-1
Nuclear Island Section A-A

Security-Related Information, Withheld Under 10 CFR 2.390d

Figure 3.3-2
Nuclear Island Section B-B

Security-Related Information, Withheld Under 10 CFR 2.390d

Figure 3.3-3
Nuclear Island Plan View at Elevation 66'-6"

Security-Related Information, Withheld Under 10 CFR 2.390d

Figure 3.3-4
Nuclear Island Plan View at Elevation 82'-6"

Security-Related Information, Withheld Under 10 CFR 2.390d

Figure 3.3-5
Nuclear Island Plan View at Elevation 96'-6"

Security-Related Information, Withheld Under 10 CFR 2.390d

Figure 3.3-6
Nuclear Island Plan View at Elevation 100'-0"

Security-Related Information, Withheld Under 10 CFR 2.390d

Figure 3.3-7
Nuclear Island Plan View at Elevation 117'-6"

Security-Related Information, Withheld Under 10 CFR 2.390d

Figure 3.3-8
Nuclear Island Plan View at Elevation 135'-3"

Security-Related Information, Withheld Under 10 CFR 2.390d

Figure 3.3-9
Nuclear Island Plan View at Elevation 153'-3" and 160'-6"

Security-Related Information, Withheld Under 10 CFR 2.390d

Figure 3.3-10
Nuclear Island Plan View at Shield Building Roof

Security-Related Information, Withheld Under 10 CFR 2.390d

Figure 3.3-11A
Annex Building Plan View at Elevation 100'-0"

Security-Related Information, Withheld Under 10 CFR 2.390d

Figure 3.3-11B
Turbine Building General Arrangement Plan at Elevation 100'-0"

Security-Related Information, Withheld Under 10 CFR 2.390d

Figure 3.3-12
Annex Building Plan View at Elevation 117'-6"

Security-Related Information, Withheld Under 10 CFR 2.390d

Figure 3.3-13
Annex Building Plan View at Elevation 135'-3"

Security-Related Information, Withheld Under 10 CFR 2.390d

Figure 3.3-14
Nuclear Island Dimensions at Elevation 66'-6"

3.4 Initial Test Program

Design Description

This section represents a commitment that combined license applicants referencing the AP1000 certified design will implement an initial test program.

An initial test program is performed during the initial startup of each AP1000 plant. The initial test program consists of a series of tests categorized as construction and installation, preoperational (prior to fuel load), and startup (during and after fuel load). All ITAAC will be completed prior to fuel load; therefore, no ITAAC are performed during the startup test phase of the initial test program.

Construction and installation tests are performed to verify the adequacy of construction, installation, and preliminary operation of components and systems. Various electrical and mechanical tests are performed including cleaning and flushing, hydrostatic testing, electrical checks, operability checks, and instrumentation calibration. The completion of the construction and installation test program demonstrates that the system is ready for preoperational testing.

Preoperational tests are performed for each system after construction and installation tests, but prior to initial fuel loading to demonstrate that equipment and systems perform in accordance with design criteria so that initial fuel loading, initial criticality, and subsequent power operation can be safely undertaken. Preoperational tests include, as appropriate, logic and interlock tests, control and instrumentation functional tests, component functional tests, operational and performance tests, and expansion, vibration, and dynamic effects tests.

Startup tests begin with the initial fuel loading and are performed to demonstrate the capability of individual systems, as well as the integrated plant, to meet performance requirements. Startup testing is conducted in four categories: tests related to initial fuel loading, tests performed after initial fuel loading but prior to initial criticality, tests related to initial criticality and those performed at low power (less than 5 percent), and tests performed at power levels greater than 5 percent (ascension to power tests). Startup tests include a controlled fuel load, reactor core and component performance tests, initial criticality, control and protection system operational tests, and plant system performance tests.

Preoperational and startup tests are performed using test specifications and test procedures. The test procedures delineate the test methods to be used in the conduct of the Initial Test Program and the applicable acceptance criteria against which performance is evaluated. Test specifications and procedures are developed and reviewed by qualified personnel. Copies of the test specifications and test procedures for preoperational tests are available to NRC personnel prior to the scheduled performance of these tests. Copies of the test specifications and test procedures for startup tests are provided to NRC inspection personnel prior to the scheduled fuel loading date. Administrative procedures are used to control the conduct of the test program; the review, evaluation and approval of test results; and test record retention.

3.5 Radiation Monitoring

Design Description

Radiation monitoring is provided for those plant areas where there is a significant potential for airborne contamination, for those process and effluent streams where contamination is possible, and in accessible areas to provide indication of unusual radiological events as identified in Tables 3.5-1, 3.5-2, 3.5-3, 3.5-4, and 3.5-5. The radiation monitoring component locations are as shown in Table 3.5-7.

1. The seismic Category I equipment identified in Table 3.5-1 can withstand seismic design basis loads without loss of safety function.

2. The Class 1E equipment identified in Table 3.5-1 as being qualified for a harsh environment can withstand the environmental conditions that would exist before, during, and following a design basis accident without loss of safety function for the time required to perform the safety function.

3. Separation is provided between system Class 1E divisions, and between Class 1E divisions and non-Class 1E cable.

4. Safety-related displays identified in Table 3.5-1 can be retrieved in the main control room (MCR).

5. The process radiation monitors listed in Table 3.5-2 are provided.

6. The effluent radiation monitors listed in Table 3.5-3 are provided.

7. The airborne radiation monitors listed in Table 3.5-4 are provided.

8. The area radiation monitors listed in Table 3.5-5 are provided.

Inspections, Tests, Analyses, and Acceptance Criteria

Table 3.5-6 specifies the inspections, tests, analyses, and associated acceptance criteria for radiation monitoring.

Table 3.5-1

Equipment Name	Tag No.	Seismic Cat. I	Class 1E	Qual. for Harsh Envir.	Safety-Related Display
Containment High Range Monitor	PXS-RE160	Yes	Yes	Yes	Yes
Containment High Range Monitor	PXS-RE161	Yes	Yes	Yes	Yes
Containment High Range Monitor	PXS-RE162	Yes	Yes	Yes	Yes
Containment High Range Monitor	PXS-RE163	Yes	Yes	Yes	Yes
MCR Radiation Monitoring Package A(1)	VBS-JS01A	Yes	Yes	No	No
MCR Radiation Monitoring Package B(1)	VBS-JS01B	Yes	Yes	No	No
Containment Atmosphere Monitor (Gaseous)	PSS-RE026	Yes	No	No	No
Containment Atmosphere Monitor (gaseous, for RCS pressure boundary leakage detection)	PSS-RE027	Yes	No	No	No

Notes: (1) Each MCR Radiation Monitoring Package includes particulate, iodine and gaseous radiation monitors.

Table 3.5-2
Process Radiation Monitors

Equipment List	Equipment No.
Steam Generator Blowdown	BDS-RE010
Steam Generator Blowdown	BDS-RE011
Component Cooling Water	CCS-RE001
Main Steam Line(1)	SGS-RY026
Main Steam Line(1)	SGS-RY027
Service Water Blowdown	SWS-RE008
Primary Sampling System Liquid Sample	PSS-RE050
Primary Sampling System Gaseous Sample	PSS-RE052
Containment Air Filtration Exhaust	VFS-RE001
Gaseous Radwaste Discharge	WGS-RE017

Note:

1. Each main steam line monitor includes a noble gas detector and primary-to-secondary side leak detector.

Table 3.5-3
Effluent Radiation Monitors

Equipment List	Equipment No.
Plant Vent (Normal Range Particulate)	VFS-RE101
Plant Vent (Normal Range Iodine)	VFS-RE102
Plant Vent (Normal Range Radiogas)	VFS-RE103
Plant Vent (Mid Range Radiogas)	VFS-RE104A
Plant Vent (High Range Radiogas)	VFS-RE104B
Turbine Island Vent(1)	TDS-RY001
Liquid Radwaste Discharge	WLS-RE229
Wastewater Discharge	WWS-RE021

Note:

1. The turbine island vent includes a low and a high range detector.

Table 3.5-4
Airborne Radiation Monitors

Equipment List	Equipment No.
Fuel Handling Area Exhaust Radiation Monitor	VAS-RE001
Auxiliary Building Exhaust Radiation Monitor	VAS-RE002
Annex Building Exhaust Radiation Monitor	VAS-RE003
Health Physics and Hot Machine Shop Exhaust Radiation Monitor	VHS-RE001
Radwaste Building Exhaust Radiation Monitor	VRS-RE023

Table 3.5-5
Area Radiation Monitors

Primary Sampling Room	RMS-RE008
Containment Area – Personnel Hatch Operating Deck (135'-3" Elevation)	RMS-RE009
Main Control Room	RMS-RE010
Chemistry Laboratory	RMS-RE011
Fuel Handling Area 1	RMS-RE012
Rail Car Bay/Filter Storage Area (Auxiliary Building Loading Bay)	RMS-RE013
Liquid and Gaseous Radwaste Area(1)	RMS-RY014
Control Support Area	RMS-RE016
Radwaste Building Mobile Systems Facility	RMS-RE017
Hot Machine Shop	RMS-RE018
Annex Staging and Storage Area	RMS-RE019
Fuel Handling Area 2	RMS-RE020
Containment Area – Personnel Hatch Maintenance Level (100'-0" Elevation)	RMS-RE021

Note:

1. This monitor includes multiple detectors to monitor the areas of interest.

Table 3.5-6
Inspections, Tests, Analyses, and Acceptance Criteria

Design Commitment	Inspections, Tests, Analyses	Acceptance Criteria
1. The seismic Category I equipment identified in Table 3.5-1 can withstand seismic design basis loads without loss of safety function.	i) Inspection will be performed to verify that the seismic Category I equipment identified in Table 3.5-1 is located on the Nuclear Island. ii) Type tests, analyses, or a combination of type tests and analyses of seismic Category I equipment will be performed. iii) Inspection will be performed for the existence of a report verifying that the as-built equipment including anchorage is seismically bounded by the tested or analyzed conditions.	i) The seismic Category I equipment identified in Table 3.5-1 is located on the Nuclear Island. ii) A report exists and concludes that the seismic Category I equipment can withstand seismic design basis loads without loss of safety function. iii) A report exists and concludes that the as-built equipment including anchorage is seismically bounded by the tested or analyzed conditions.
2. The Class 1E equipment identified in Table 3.5-1 as being qualified for a harsh environment can withstand the environmental conditions that would exist before, during, and following a design basis accident without loss of safety function for the time required to perform the safety function.	i) Type tests, analyses, or a combination of type tests and analyses will be performed on Class 1E equipment located in a harsh environment. ii) Inspection will be performed of the as-built Class 1E equipment and the associated wiring, cables, and terminations located in a harsh environment.	i) A report exists and concludes that Class 1E equipment identified in Table 3.5-1 as being located in a harsh environment can withstand the environmental conditions that would exist before, during, and following a design basis accident without loss of safety function for the time required to perform the safety function. ii) A report exists and concludes that the as-built Class 1E equipment and the associated wiring, cables, and terminations identified in Table 3.5-1 as being qualified for a harsh environment are bounded by type tests, analyses, or a combination of type tests and analyses.
3. Separation is provided between system Class 1E divisions, and between Class 1E divisions and non-Class 1E cable.	See Tier 1 Material, Table 3.3-6, item 7.d).	See Tier 1 Material, Table 3.3-6, item 7.d).

Table 3.5-6 (cont.)
Inspections, Tests, Analyses, and Acceptance Criteria

Design Commitment	Inspections, Tests, Analyses	Acceptance Criteria
4. Safety-related displays identified in Table 3.5-1 can be retrieved in the MCR.	Inspection will be performed for retrievability of the displays in the MCR.	Safety-related displays identified in Table 3.5-1 can be retrieved in the MCR.
5. The process radiation monitors listed in Table 3.5-2 are provided.	Inspection for the existence of the monitors will be performed.	Each of the monitors listed in Table 3.5-2 exists.
6. The effluent radiation monitors listed in Table 3.5-3 are provided.	Inspection for the existence of the monitors will be performed.	Each of the monitors listed in Table 3.5-3 exists.
7. The airborne radiation monitors listed in Table 3.5-4 are provided.	Inspection for the existence of the monitors will be performed.	Each of the monitors listed in Table 3.5-4 exists.
8. The area radiation monitors listed in Table 3.5-5 are provided.	Inspection for the existence of the monitors will be performed.	Each of the monitors listed in Table 3.5-5 exists.

Table 3.5-7

Component Name	Tag No.	Component Location
Containment High Range Radiation Monitor	PXS-RE160	Containment
Containment High Range Radiation Monitor	PXS-RE161	Containment
Containment High Range Radiation Monitor	PXS-RE162	Containment
Containment High Range Radiation Monitor	PXS-RE163	Containment
MCR Radiation Monitoring Package A	VBS-RY01A	Auxiliary Building
MCR Radiation Monitoring Package B	VBS-RY01B	Auxiliary Building
Containment Atmosphere Radiation Monitor (Gaseous)	PSS-RE026	Auxiliary Building
Containment Atmosphere Radiation Monitor (gaseous, for RCS pressure boundary leakage detection)	PSS-RE027	Auxiliary Building
Steam Generator Blowdown Radiation Monitor	BDS-RE010	Turbine Building
Steam Generator Blowdown Radiation Monitor	BDS-RE011	Turbine Building
Component Cooling Water Radiation Monitor	CCS-RE001	Turbine Building
Main Steam Line Radiation Monitor	SGS-RY026	Auxiliary Building
Main Steam Line Radiation Monitor	SGS-RY027	Auxiliary Building
Service Water Blowdown Radiation Monitor	SWS-RE008	Turbine Building
Primary Sampling System Liquid Sample Radiation Monitor	PSS-RE050	Auxiliary Building
Primary Sampling System Gaseous Sample Radiation Monitor	PSS-RE052	Auxiliary Building
Containment Air Filtration Exhaust Radiation Monitor	VFS-RE001	Annex Building
Gaseous Radwaste Discharge Radiation Monitor	WGS-RE017	Auxiliary Building
Plant Vent (Normal Range Particulate) Radiation Monitor	VFS-RE101	Auxiliary Building
Plant Vent (Normal Range Iodine) Radiation Monitor	VFS-RE102	Auxiliary Building
Plant Vent (Normal Range Radiogas) Radiation Monitor	VFS-RE103	Auxiliary Building
Plant Vent (Mid Range Radiogas) Radiation Monitor	VFS-RE104A	Auxiliary Building
Plant Vent (High Range Radiogas) Radiation Monitor	VFS-RE104B	Auxiliary Building
Turbine Island Vent Radiation Monitor	TDS-RY001	Turbine Building
Liquid Radwaste Discharge Monitor	WLS-RE229	Radwaste Building

Table 3.5-7 (cont.)

Component Name	Tag No.	Component Location
Wastewater Discharge Radiation Monitor	WWS-RE021	Turbine Building
Fuel Handling Area Exhaust Radiation Monitor	VAS-RE001	Auxiliary Building
Auxiliary Building Exhaust Radiation Monitor	VAS-RE002	Auxiliary Building
Annex Building Exhaust Radiation Monitor	VAS-RE003	Auxiliary Building
Health Physics and Hot Machine Shop Exhaust Radiation Monitor	VHS-RE001	Annex Building
Radwaste Building Exhaust Radiation Monitor	VRS-RE023	Radwaste Building
Primary Sampling Room	RMS-RE008	Auxiliary Building
Containment Area – Personnel Hatch – Operating Deck	RMS-RE009	Auxiliary Building
Main Control Room	RMS-RE010	Auxiliary Building
Chemistry Laboratory	RMS-RE011	Auxiliary Building
Fuel Handling Area 1	RMS-RE012	Auxiliary Building
Rail Car Bay/Filter Storage Area (Auxiliary Building Loading Bay)	RMS-RE013	Auxiliary Building
Liquid and Gaseous Radwaste Area	RMS-RY014	Radwaste Building
Control Support Area	RMS-RE016	Annex Building
Radwaste Building Mobile Systems Facility	RMS-RE017	Radwaste Building
Hot Machine Shop	RMS-RE018	Annex Building
Annex Staging and Storage Area	RMS-RE019	Annex Building
Fuel Handling Area 2	RMS-RE020	Auxiliary Building
Containment Area – Personnel Hatch – Maintenance Level	RMS-RE021	Auxiliary Building

3.6 Reactor Coolant Pressure Boundary Leak Detection

Design Description

The reactor coolant pressure boundary leakage detection monitoring provides a means of detecting and quantifying the reactor coolant leakage. To detect unidentified leakage inside containment, the following diverse methods are provided to quantify and assist in locating the leakage:

- Containment Sump Level
- Reactor Coolant System Inventory Balance
- Containment Atmosphere Radiation

Leakage detection monitoring is accomplished using instrumentation and other components of several systems.

1. The diverse leak detection methods provide the nonsafety-related function of detecting small leaks when RCS leakage indicates possible reactor coolant pressure boundary degradation.

Inspection, Tests, Analyses, and Acceptance Criteria

Table 3.6-1 specifies the inspections, tests, analyses, and associated acceptance criteria for the leak detection equipment.

Table 3.6-1
Inspections, Tests, Analyses, and Acceptance Criteria

Design Commitment	Inspections, Tests, Analyses	Acceptance Criteria
1. The diverse leak detection methods provide the nonsafety-related function of detecting small leaks when RCS leakage indicates possible reactor coolant pressure boundary degradation.	See Tier 1 Material sections: i) See Tier 1 Material, Table 2.3.10-4, Item 7a for the sump level measuring instruments WLS-034 and WLS-035. ii) See Tier 1 Material, Table 3.5-6, Item 1 for the containment atmosphere radioactivity monitor PSS-RE027. iii) See Tier 1 Material, Table 2.1.2-4, Items 5a, 7a, and 10 for the pressurizer level measuring instruments RCS-195A, RCS-195B, RCS-195C, and RCS-195D. iv) See Tier 1 Material, Table 2.1.2-4, Items 5a and 7a for the RCS hot and cold leg temperature instruments RCS-121A, RCS-121B, RCS-121C, RCS-121D, RCS-122A, RCS-122B, RCS-122C, RCS-122D, RCS-131A, RCS-131B, RCS-131C, RCS-131D, RCS-132A, RCS-132B, RCS-132C, and RCS-132D. v) See Tier 1 Material, Table 2.1.2-4, Items 5a, 7a, and 10 for the RCS pressure instruments RCS-140A, RCS-140B, RCS-140C, and RCS-140D. vi) See Tier 1 Material, Table 2.3.2-4, Item 13 for the letdown and makeup flow instruments CVS-001 and CVS-025. vii) See Tier 1 Material, Table 2.3.10-4, Item 10 for the reactor coolant drain tank level instrument WLS-002.	See Tier 1 Material sections: i) See Tier 1 Material, Table 2.3.10-4, Item 7a for the sump level measuring instruments WLS-034 and WLS-035. ii) See Tier 1 Material, Table 3.5-6, Item 1 for the containment atmosphere radioactivity monitor PSS-RE027. iii) See Tier 1 Material, Table 2.1.2-4, Items 5a, 7a, and 10 for the pressurizer level measuring instruments RCS-195A, RCS-195B, RCS-195C, and RCS-195D. iv) See Tier 1 Material, Table 2.1.2-4, Items 5a and 7a for the RCS hot and cold leg temperature instruments RCS-121A, RCS-121B, RCS-121C, RCS-121D, RCS-122A, RCS-122B, RCS-122C, RCS-122D, RCS-131A, RCS-131B, RCS-131C, RCS-131D, RCS-132A, RCS-132B, RCS-132C, and RCS-132D. v) See Tier 1 Material, Table 2.1.2-4, Items 5a, 7a, and 10 for the RCS pressure instruments RCS-140A, RCS-140B, RCS-140C, and RCS-140D. vi) See Tier 1 Material, Table 2.3.2-4, Item 13 for the letdown and makeup flow instruments CVS-001 and CVS-025. vii) See Tier 1 Material, Table 2.3.10-4, Item 10 for the reactor coolant drain tank level instrument WLS-002.

3.7 Design Reliability Assurance Program

The Design Reliability Assurance Program (D-RAP) is a program that will be performed during the detailed design and equipment specification phase prior to initial fuel load. The D-RAP evaluates and sets priorities for the structures, systems, and components (SSCs) in the design, based on their degree of risk significance. The risk-significant components are listed in Table 3.7-1.

The objective of the D-RAP program is to provide reasonable assurance that risk-significant SSCs (Table 3.7-1) are designed such that: (1) assumptions from the risk analysis are utilized, (2) SSCs (Table 3.7-1) when challenged, function in accordance with the assumed reliability, (3) SSCs (Table 3.7-1) whose failure results in a reactor trip, function in accordance with the assumed reliability, and (4) maintenance actions to achieve the assumed reliability are identified.

1. The D-RAP ensures that the design of SSCs within the scope of the reliability assurance program (Table 3.7-1) is consistent with the risk insights and key assumptions (e.g., SSC design, reliability, and availability).

Inspections, Tests, Analyses, and Acceptance Criteria

Table 3.7-3 specifies the inspections, tests, analyses, and associated acceptance criteria for the D-RAP.

Table 3.7-1
Risk-Significant Components

Equipment Name	Tag No.
Component Cooling Water System (CCS)	
Component Cooling Water Pumps	CCS-MP-01A/B
Containment System (CNS)	
Containment Vessel	CNS-MV-01
Hydrogen Igniters	VLS-EH-1 through -64
Chemical and Volume Control System (CVS)	
Makeup Pumps	CVS-MP-01A/B
Makeup Pump Suction and Discharge Check Valves	CVS-PL-V113 CVS-PL-V160A/B
Letdown Discharge Isolation Valves	CVS-PL-V045 CVS-PL-V047
Diverse Actuation System (DAS)	
DAS Processor Cabinets and Control Panel (used to provide automatic and manual actuation)	DAS-JD-001 DAS-JD-002 DAS-JD-003 DAS-JD-004 OCS-JC-020

Table 3.7-1 (cont.)
Risk-Significant Components

Equipment Name	Tag No.
Annex Building UPS Distribution Panels (provide power to DAS)	EDS1-EA-1, EDS1-EA-14, EDS2-EA-1, EDS2-EA-14
Rod Drive MG Sets (Field Breakers)	PLS-MG-01A/B
Containment Isolation Valves Controlled by DAS	CVS-PL-V045, -V047 VFS-PL-V003, -V004, -V009, -V010 WLS-PL-V055, -V057
Main ac Power System (ECS)	
Reactor Coolant Pump Switchgear	ECS-ES-31, -32, -41, -42, -51, -52, -61, -62
Ancillary Diesel Generators	ECS-MS-01, -02
6900 Vac Buses	ECS-ES-1, -2
Main and Startup Feedwater System (FWS)	
Startup Feedwater Pumps	FWS-MP-03A/B
General I&C	
IRWST Level Sensors	PXS-045, -046, -047, -048
RCS Hot Leg Level Sensors	RCS-160A/B
Pressurizer Pressure Sensors	RCS-191A/B/C/D
Pressurizer Level Sensors	RCS-195A/B/C/D
Steam Generator Narrow-Range Level Sensors	SGS-001, -002, -003, -004, -005, -006, -007, -008
Steam Generator Wide-Range Level Sensors	SGS-011, -012, -013, -014, -015, -016, -017, -018
Main Steam Line Pressure Sensors	SGS-030, -031, -032, -033, -034, -035, -036, -037
Main Feedwater Wide-Range Flow Sensors	FWS-050B/D/F, -051B/D/F
Startup Feedwater Flow Sensors	SGS-055A/B, -056A/B
CMT Level Sensors	PXS-011A/B/C/D, -012A/B/C/D, -013A/B/C/D, -014A/B/C/D
Class 1E dc Power and Uninterruptible Power System (IDS)	
250 Vdc 24-Hour Batteries	IDSA-DB-1A/B, IDSB-DB-1A/B, IDSC-DB-1A/B, IDSD-DB-1A/B

Table 3.7-1 (cont.)
Risk-Significant Components

Equipment Name	Tag No.
250 Vdc 24-Hour Buses	IDSA-DS-1, IDSB-DS-1 IDSC-DS-1, IDSD-DS-1
250 Vdc 24-Hour Battery Chargers	IDSA-DC-1, IDSB-DC-1, IDSC-DC-1, IDSD-DC-1
250 Vdc and 120 Vac Distribution Panels	IDSA-DD-1, IDSA-EA-1/-2, IDSB-DD-1, IDSB-EA-1/-2/-3, IDSC-DD-1, IDSC-EA-1/-2/-3, IDSD-DD-1, IDSD-EA-1/-2
Fused Transfer Switch Boxes	IDSA-DF-1, IDSB-DF-1/-2, IDSC-DF-1/-2, IDSD-DF-1
250 Vdc Motor Control Centers	IDSA-DK-1, IDSB-DK-1, IDSC-DK-1, IDSD-DK-1
250 Vdc 24-Hour Inverters	IDSA-DU-1, IDSB-DU-1, IDSC-DU-1, IDSD-DU-1
Passive Containment Cooling System (PCS)	
Recirculation Pumps	PCS-MP-01A/B
PCCWST Drain Isolation Valves	PCS-PL-V001A/B/C
Plant Control System (PLS)	
PLS Actuation Software (used to provide control functions)	Refer to Table 3.7-2
PLS Actuation Hardware (used to provide control functions)	Refer to Table 3.7-2
Protection and Monitoring System (PMS)	
PMS Actuation Software (used to provide automatic control functions)	Refer to Tables 2.5.2-2 and 2.5.2-3
PMS Actuation Hardware (used to provide automatic control functions)	Refer to Tables 2.5.2-2 and 2.5.2-3
MCR 1E Displays and System Level Controls	OCS-JC-010, -011
Reactor Trip Switchgear	PMS-JD-RTS A01/02, B01/02, C01/02, D01/02
Passive Core Cooling System (PXS)	
IRWST Vents	PXS-MT-03
IRWST Screens	PXS-MY-Y01A/B/C
Containment Recirculation Screens	PXS-MY-Y02A/B

Table 3.7-1 (cont.)
Risk-Significant Components

Equipment Name	Tag No.
CMT Discharge Isolation Valves	PXS-PL-V014A/B, -V015A/B
CMT Discharge Check Valves	PXS-PL-V016A/B, -V017A/B
Accumulator Discharge Check Valves	PXS-PL-V028A/B, -V029A/B
PRHR HX Control Valves	PXS-PL-V108A/B
Containment Recirculation Squib Valves	PXS-PL-V118A/B, -V120A/B
IRWST Injection Check Valves	PXS-PL-V122A/B, -V124A/B
IRWST Injection Squib Valves	PXS-PL-V123A/B, -V125A/B
IRWST Gutter Bypass Isolation Valves	PXS-PL-V130A/B
Reactor Coolant System (RCS)	
ADS Stage 1/2/3 Valves (MOVs)	RCS-PL-V001A/B, -V011A/B RCS-PL-V002A/B, -V012A/B RCS-PL-V003A/B, -V013A/B
ADS Stage 4 Valves (Squibs)	RCS-PL-V004A/B/C/D
Pressurizer Safety Valves	RCS-PL-V005A/B
Reactor Vessel Insulation Water Inlet and Steam Vent Devices	RCS-MN-01
Reactor Cavity Doorway Damper	–
Fuel Assemblies	157 assemblies with tag numbers beginning with RXS-FA
Normal Residual Heat Removal System (RNS)	
Residual Heat Removal Pumps	RNS-MP-01A/B
RNS Motor-Operated Valves	RNS-PL-V011, -V022, -V023, -V055
RNS Stop Check Valves RNS Check Valves	RNS-PL-V015A/B RNS-PL-V017A/B
RNS Check Valves	RNS-PL-V007A/B, -V013, -V056
Spent Fuel Cooling System (SFS)	
Spent Fuel Cooling Pumps	SFS-MP-01A/B
Steam Generator System (SGS)	

Table 3.7-1 (cont.)
Risk-Significant Components

Equipment Name	Tag No.
Main Steam Safety Valves	SGS-PL-V030A/B, -V031A/B, -V032A/B, -V033A/B, -V034A/B, -V035A/B
Main Steam Line Isolation Valves	SGS-PL-V040A/B
Main Feedwater Isolation Valves	SGS-PL-V057A/B
Service Water System (SWS)	
Service Water Cooling Tower Fans	SWS-MA-01A/B
Service Water Pumps	SWS-MP-01A/B
Nuclear Island Nonradioactive Ventilation System (VBS)	
MCR Ancillary Fans	VBS-MA-10A/B
I&C Room B/C Ancillary Fans	VBS-MA-11, -12
Containment Air Filtration System (VFS)	
Containment Purge Isolation Valves	VFS-PL-V003 VFS-PL-V004 VFS-PL-V009 VFS-PL-V010
Chilled Water System (VWS)	
Air Cooled Chiller Pumps	VWS-MP-02, -03
Air Cooled Chillers	VWS-MS-02, -03
Liquid Radwaste System (WLS)	
Sump Containment Isolation Valves	WLS-PL-V055 WLS-PL-V057
Onsite Standby Power System (ZOS)	
Engine Room Exhaust Fans	VZS-MY-V01A/B, -V02A/B
Onsite Diesel Generators	ZOS-MS-05A/B

Note: Dash (-) indicates not applicable.

Table 3.7-2
PLS D-RAP Control Functions

CVS Reactor Makeup
RNS Reactor Injection from cask loading pit
Startup Feedwater from CST
Spent Fuel Cooling
Component Cooling of RNS and SFS Heat Exchangers
Service Water Cooling of CCS Heat Exchangers
Onsite Diesel Generators
Hydrogen Ignitors

Table 3.7-3
Inspections, Tests, Analyses and Acceptance Criteria

Design Commitment	Inspections, Tests, Analyses	Acceptance Criteria
1. The D-RAP ensures that the design of SSCs within the scope of the reliability assurance program (Table 3.7-1) is consistent with the risk insights and key assumptions (e.g., SSC design, reliability, and availability).	An analysis will confirm that the design of RAP SSCs identified in Table 3.7-1 has been completed in accordance with applicable D-RAP activities.	An analysis report documents that safety-related SSCs identified in Table 3.7-1 have been designed in accordance with a 10 CFR 50 Appendix B quality program. An analysis report documents that non-safety-related SSCs identified in Table 3.7-1 have been designed in accordance with a program that satisfies quality assurance requirements for SSCs important to investment protection.

4.0 Interface Requirements

The 10 CFR 52.47 (a)(1)(vii) requires identification of the interface requirements to be met by those portions of the plant for which the application does not seek certification. The 10 CFR 52.47 (a)(1)(viii) requires justification that these interfaces be verifiable through inspection, testing (either in the plant or elsewhere), or analysis. An applicant for a combined license (COL) that references the Certified Design must provide design features or characteristics that comply with the interface requirements for the plant design and inspections, tests, analyses, and acceptance criteria (ITAAC) for the site-specific portion of the facility design, in accordance with 10 CFR 52.79 (c).

No Tier 1 interfaces were identified for the AP1000 standard plant design.

5.0 Site Parameters

Table 5.0-1 identifies the key site parameters that are specified for the design of safety-related aspects of structures, systems, and components for the AP1000. An actual site is acceptable if its site characteristics fall within the AP1000 plant site design parameters in Table 5.0-1.

Structures, systems, and components for the AP1000 are evaluated for generic envelope response spectra with high frequency seismic input. The spectra shown in Figure 5.0-3 and Figure 5.0-4 provide hard rock high frequency (HRHF) envelope response spectra at the foundation level for both the horizontal and vertical directions for 5% damping. An actual site is acceptable if its site-specific GMRS falls within the AP1000 HRHF parameters in Figures 5.0-3 and 5.0-4. No additional design or analyses are required for the structures, systems, and components for sites that fall within the AP1000 HRHF parameters.

Table 5.0-1
Site Parameters

Maximum Ground Water Level	Plant elevation 98 ft
Maximum Flood Level	Plant elevation 100 ft (design grade elevation)
Precipitation	
Rain	20.7 in/hr [1-hr 1-mi^2 PMP]
Snow/Ice	Ground snow load of 75 lb/ft^2 with exposure factor of 1.0 and importance factor of 1.2
Air Temperature	Limits based on historical data excluding peaks of less than 2 hours duration Maximum temperature of 115° dry bulb/86.1°F coincident wet bulb Maximum wet bulb 86.1°F (noncoincident) Minimum temperature of -40°F
Tornado	
Wind Speed	Maximum wind speed of 300 mph
Maximum Pressure Differential	Maximum pressure differential of 2.0 lb/in^2
Tornado Missile Spectra	4000-lb automobile at 105 mph horizontal, 74 mph vertical 275-lb, 8-in. shell at 105 mph horizontal, 74 mph vertical 1-in.-diameter steel ball at 105 mph in the most damaging direction
Soil	
Average Allowable Static Soil Bearing Capacity	The allowable bearing capacity, including a factor of safety appropriate for the design load combination, shall be greater than or equal to the average bearing demand of 8,900 lb/ft^2 over the footprint of the nuclear island at its excavation depth.
Minimum Soil Angle of Internal Friction	The minimum soil angle of internal friction is greater than or equal to 35 degrees below the footprint of the nuclear island at its excavation depth. If the minimum soil angle of internal friction is below 35 degrees, a site-specific analysis shall be performed using the site-specific soil properties to demonstrate stability.
Dynamic Bearing Capacity for Normal Plus Safe Shutdown Earthquake (SSE)	The allowable bearing capacity, including a factor of safety appropriate for the design load combination, shall be greater than or equal to the maximum bearing demand of 35,000 lb/ft^2 at the edge of the nuclear island at its excavation depth, or site-specific analyses demonstrate factor of safety appropriate for normal plus safe shutdown earthquake loads.

Table 5.0-1 (cont.)
Site Parameters

Soil (cont.)		
Limits of Acceptable Settlement Without Additional Evaluation(1)	Differential across nuclear island foundation mat	1/2 inch in 50 feet
	Total for nuclear island foundation mat	6 inches
	Differential between nuclear island and turbine building(2)	3 inches
	Differential between nuclear island and other buildings(2)	3 inches
Lateral Variability	Soils supporting the nuclear island should not have extreme variations in subgrade stiffness. This may be demonstrated by one of the following: 1. Soils supporting the nuclear island are uniform in accordance with Regulatory Guide 1.132 if the geologic and stratigraphic features at depths less than 120 feet below grade can be correlated from one boring or sounding location to the next with relatively smooth variations in thicknesses or properties of the geologic units, or 2. Site-specific assessment of subsurface conditions demonstrates that the bearing pressures below the footprint of the nuclear island do not exceed 120% of those from the generic analyses of the nuclear island at a uniform site, or 3. Site-specific analysis of the nuclear island basemat demonstrates that the site specific demand is within the capacity of the basemat.	

Notes:

1. Additional evaluation may include evaluation of the impact of the elevated estimated settlement values on the critical components of the AP1000, determining a construction sequence to control the predicted settlement behavior, or developing an active settlement monitoring system throughout the entire construction sequence as well as a long-term (plant operation) plan.

2. Differential settlement is measured at the center of the nuclear island and the center of adjacent structures.

Table 5.0-1 (cont.)
Site Parameters

Soil (cont.)	
Lateral Variability (cont.)	As an example of sites that are considered uniform, the variation of shear wave velocity in the material below the foundation to a depth of 120 feet below finished grade within the nuclear island footprint and 40 feet beyond the boundaries of the nuclear island footprint meets the criteria in the case outlined below. Case 1: For a layer with a low strain shear wave velocity greater than or equal to 2500 feet per second, the layer should have approximately uniform thickness, should have a dip not greater than 20 degrees, and should have less than 20 percent variation in the shear wave velocity from the average velocity in any layer.
Shear Wave Velocity	Greater than or equal to 1000 ft/sec based on minimum low-strain soil properties over the footprint of the nuclear island at its excavation depth
Liquefaction Potential	No liquefaction considered beneath the seismic Category I and seismic Category II structures and immediate surrounding area. The immediate surrounding area includes the effective soil supporting media associated with the seismic Category I and seismic Category II structures.
Seismic	
CSDRS	CSDRS free field peak ground acceleration of 0.30g with modified Regulatory Guide 1.60 response spectra (See Figures 5.0-1 and 5.0-2). The SSE is now referred to as CSDRS. Seismic input is defined at finished grade except for sites where the nuclear island is founded on hard rock. If the site-specific spectra exceed the response spectra in Figures 5.0-1 and 5.0-2 at any frequency, or if soil conditions are outside the range evaluated for AP1000 design certification, a site-specific evaluation can be performed. This evaluation will consist of a site-specific dynamic analysis and generation of in-structure response spectra at key locations to be compared with the floor response spectra of the certified design at 5-percent damping. The site is acceptable if the floor response spectra from the site-specific evaluation do not exceed the AP1000 spectra for each of the locations or the exceedances are justified.

Table 5.0-1 (cont.)
Site Parameters

Seismic (cont.) CSDRS (cont.)	The hard rock high frequency (HRHF) envelope response spectra are shown in Figure 5.0-3 and Figure 5.0-4 defined at the foundation level for 5% damping. The HRHF envelope response spectra provide an alternative set of spectra for evaluation of site-specific GMRS. A site is acceptable if its site-specific GMRS falls within the AP1000 HRHF envelope response spectra. Evaluation of a site for application of the HRHF envelope response spectra includes consideration of the limitation on shear wave velocity identified for use of the HRHF envelope response spectra. This limitation is defined by a shear wave velocity at the bottom of the basemat equal to or higher than 7,500 fps, while maintaining a shear wave velocity equal to or above 8,000 fps at the lower depths.
Fault Displacement Potential	No potential fault displacement considered beneath the seismic Category I and seismic Category II structures and immediate surrounding area. The immediate surrounding area includes the effective soil supporting media associated with the seismic Category I and seismic Category II structures.
Atmospheric Dispersion Factors (χ/Q)	
Site Boundary (0-2 hr)	$\leq 5.1 \times 10^{-4}$ sec/m^3
Site Boundary (annual average)	$\leq 2.0 \times 10^{-5}$ sec/m^3
Low Population Zone Boundary	
0 - 8 hr	$\leq 2.2 \times 10^{-4}$ sec/m^3
8 - 24 hr	$\leq 1.6 \times 10^{-4}$ sec/m^3
24 - 96 hr	$\leq 1.0 \times 10^{-4}$ sec/m^3
96 - 720 hr	$\leq 8.0 \times 10^{-5}$ sec/m^3

Table 5.0-1 (cont.)
Site Parameters

Control Room Atmospheric Dispersion Factors (χ /Q) for Accident Dose Analysis						
χ/Q (s/m^3) at HVAC Intake for the Identified Release Points(3)						
	Plant Vent or PCS Air Diffuser(5)	Ground Level Containment Release Points(6)	PORV and Safety Valve Releases(7)	Steam Line Break Releases	Fuel Handling Area(8)	Condenser Air Removal Stack(9)
0 - 2 hours	3.0E-3	6.0E-3	2.0E-2	2.4E-2	6.0E-3	6.0E-3
2 - 8 hours	2.5E-3	3.6E-3	1.8E-2	2.0E-2	4.0E-3	4.0E-3
8 - 24 hours	1.0E-3	1.4E-3	7.0E-3	7.5E-3	2.0E-3	2.0E-3
1 - 4 days	8.0E-4	1.8E-3	5.0E-3	5.5E-3	1.5E-3	1.5E-3
4 - 30 days	6.0E-4	1.5E-3	4.5E-3	5.0E-3	1.0E-3	1.0E-3
χ/Q (s/m^3) at Annex Building Door for the Identified Release Points(4)						
0 - 2 hours	1.0E-3	1.0E-3	4.0E-3	4.0E-3	6.0E-3	2.0E-2
2 - 8 hours	7.5E-4	7.5E-4	3.2E-3	3.2E-3	4.0E-3	1.8E-2
8 - 24 hours	3.5E-4	3.5E-4	1.2E-3	1.2E-3	2.0E-3	7.0E-3
1 - 4 days	2.8E-4	2.8E-4	1.0E-3	1.0E-3	1.5E-3	5.0E-3
4 - 30 days	2.5E-4	2.5E-4	8.0E-4	8.0E-4	1.0E-3	4.5E-3

Notes:

3. These dispersion factors are to be used 1) for the time period preceding the isolation of the main control room and actuation of the emergency habitability system, 2) for the time after 72 hours when the compressed air supply in the emergency habitability system would be exhausted and outside air would be drawn into the main control room, and 3) for the determination of control room doses when the nonsafety ventilation system is assumed to remain operable such that the emergency habitability system is not actuated.

4. These dispersion factors are to be used when the emergency habitability system is in operation and the only path for outside air to enter the main control room is that due to ingress/egress.

5. These dispersion factors are used for analysis of the doses due to a postulated small line break outside of containment. The plant vent and PCS air diffuser are potential release paths for other postulated events (loss-of-coolant accident, rod ejection accident, and fuel handling accident inside the containment); however, the values are bounded by the dispersion factors for ground level releases.

6. The listed values represent modeling the containment shell as a diffuse area source, and are used for evaluating the doses in the main control room for a loss-of-coolant accident, for the containment leakage of activity following a rod ejection accident, and for a fuel handling accident occurring inside the containment.

7. The listed values bound the dispersion factors for releases from the steam line safety and power-operated relief valves. These dispersion factors would be used for evaluating the doses in the main control room for a steam generator tube rupture, a main steam line break, a locked reactor coolant pump rotor, and the secondary side release from a rod ejection accident.

8. The listed values bound the dispersion factors for releases from the fuel storage and handling area. The listed values also bound the dispersion factors for releases from the fuel storage area in the event that spent fuel boiling occurs and the fuel building relief panel opens on high temperature. These dispersion factors are used for the fuel handling accident occurring outside containment and for evaluating the impact of releases associated with spent fuel pool boiling.

9. This release point is included for information only as a potential activity release point. None of the design basis accident radiological consequences analyses model release from this point.

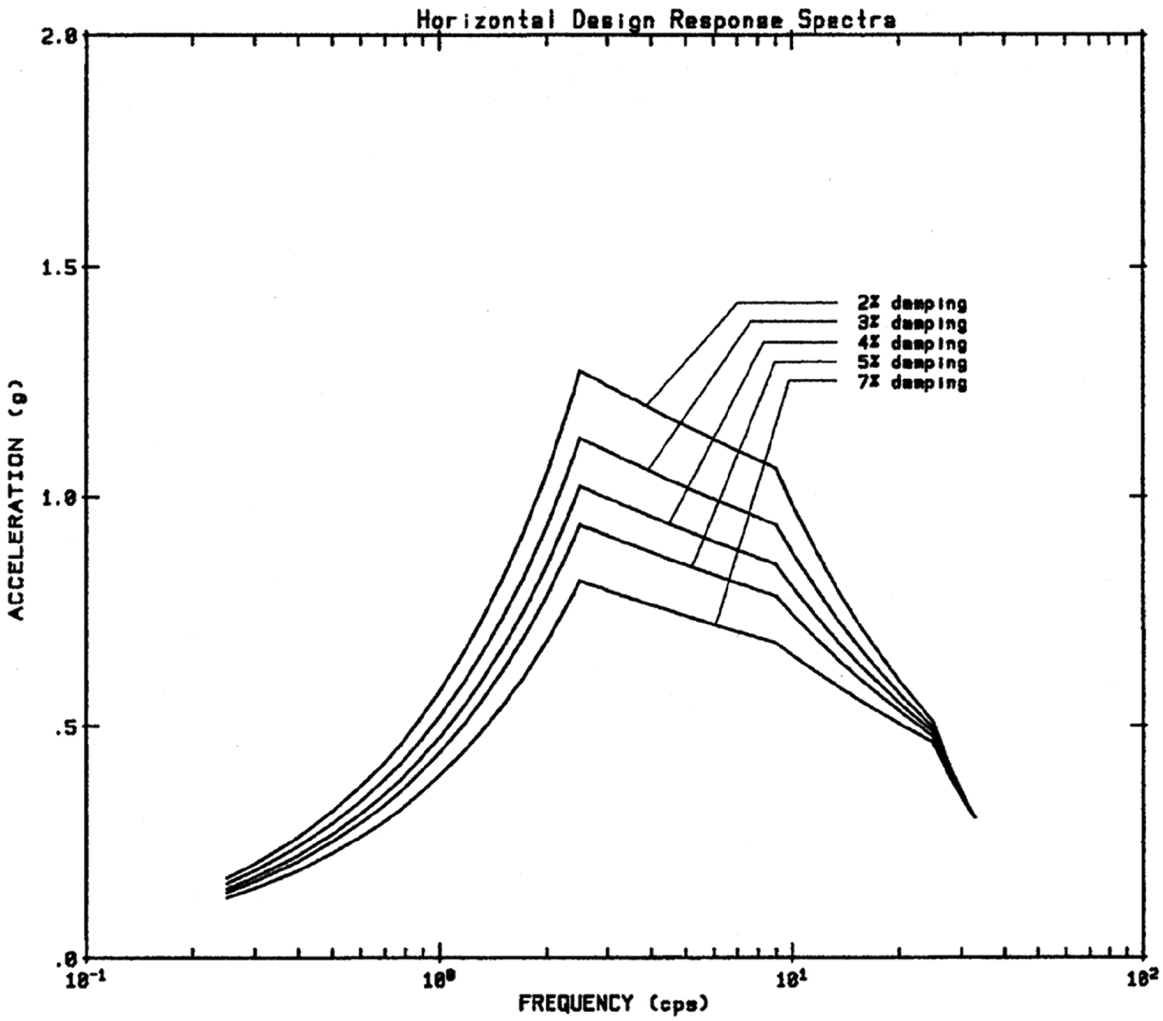

Figure 5.0-1
Horizontal Design Response Spectra
Safe Shutdown Earthquake

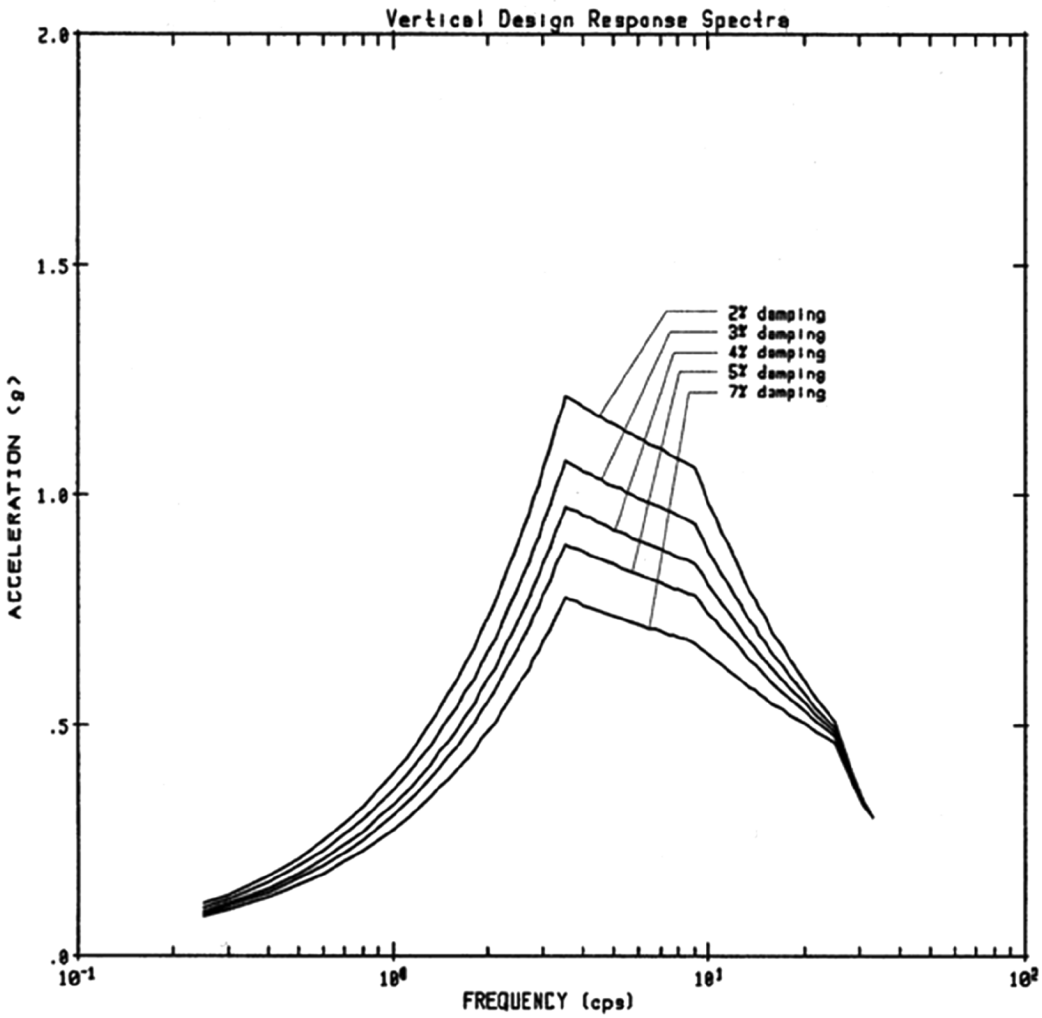

Figure 5.0-2
Vertical Design Response Spectra
Safe Shutdown Earthquake

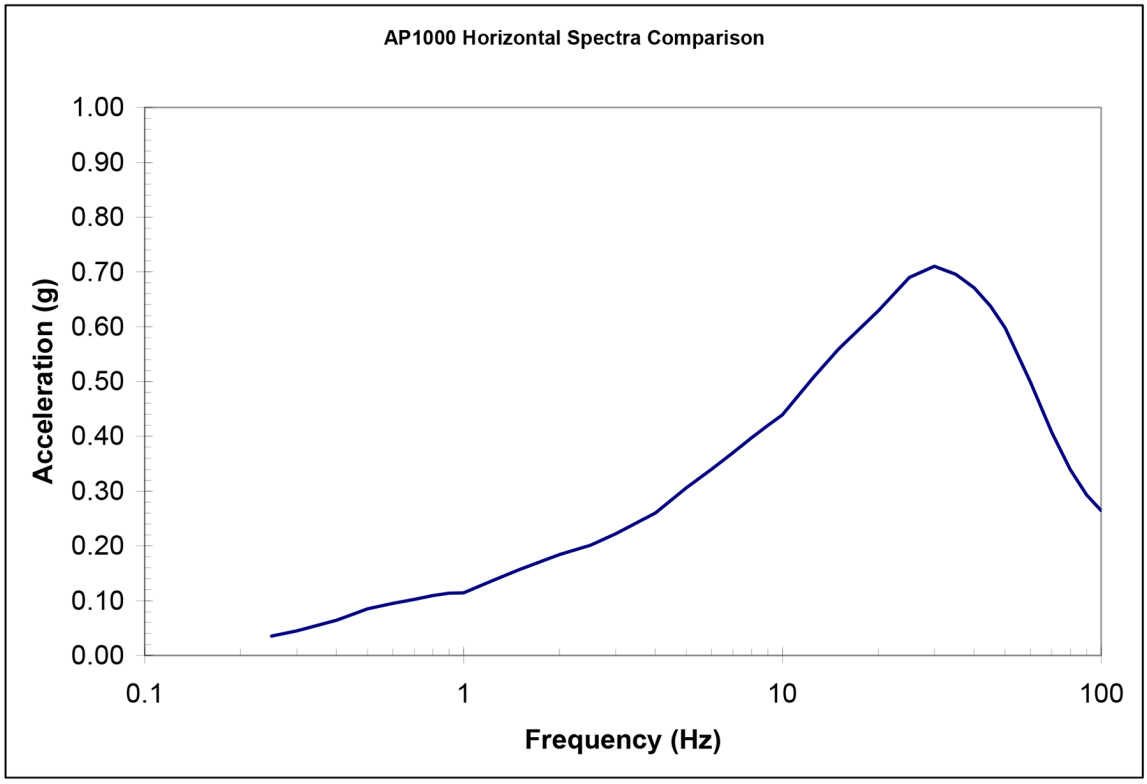

Figure 5.0-3
Horizontal HRHF Envelope Response Spectra
Safe Shutdown Earthquake

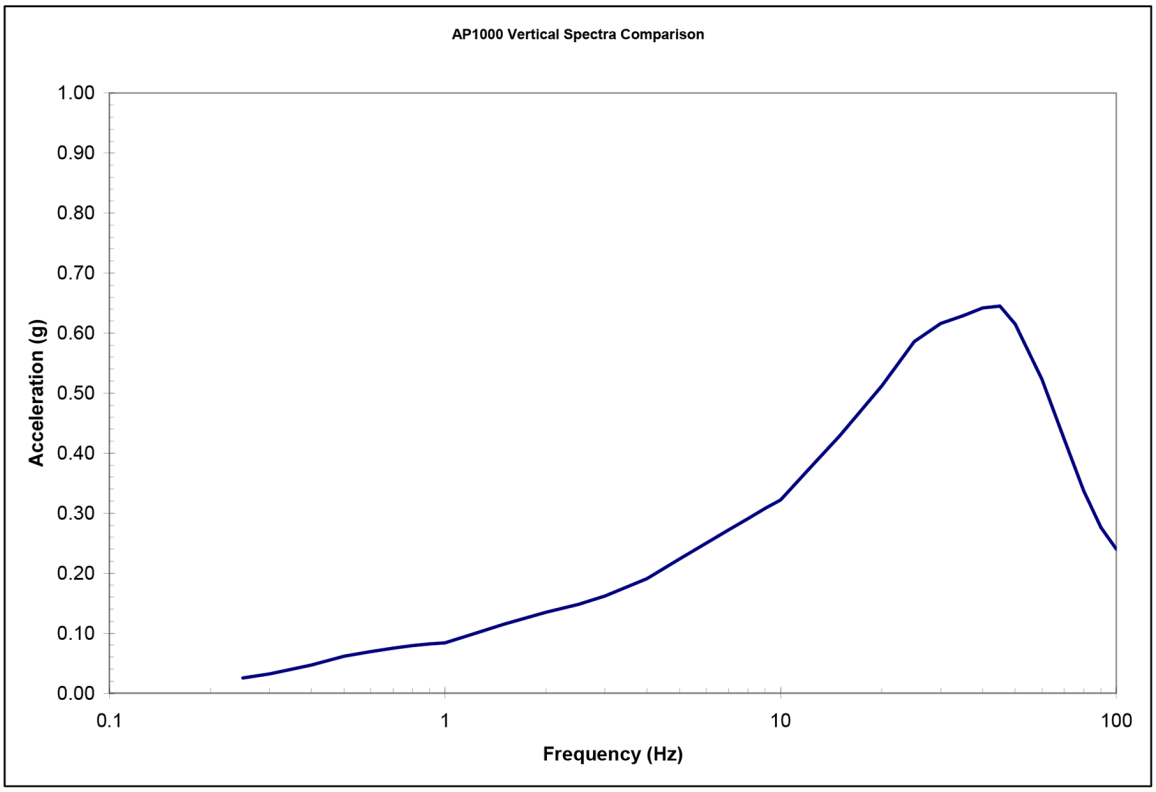

Figure 5.0-4
Vertical HRHF Envelope Response Spectra
Safe Shutdown Earthquake